CD RECEIVER

KDC-W3534A/G
KDC-W40AY

SERVICE MANUAL

KENWOOD

Kenwood Corporation

B53-0422-00 (N) 350

SPARE TDF PANEL

MAIN UNIT NAME	TDF PARTS No.	TDF NAME
KDC-W3534A	Y33-2420-64	TDF-W4034Y
KDC-W3534G	Y33-2420-64	TDF-W4034Y
KDC-W40AY	Y33-2420-66	TDF-W434Y

Panel assy
KDC-W3534A/G (A64-3957-12)

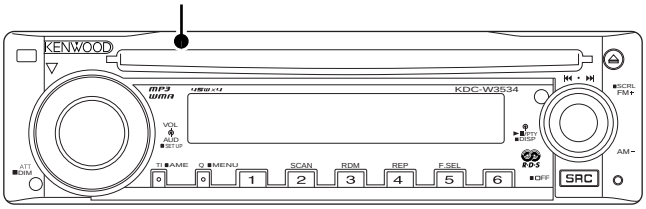

Panel assy
KDC-W40AY (A64-3806-22)

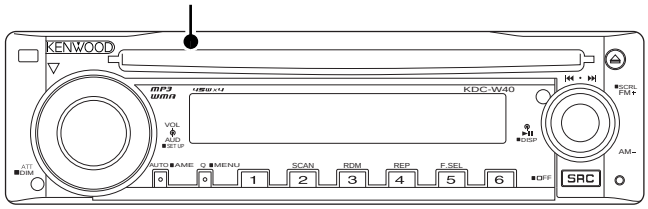

Mounting hardware assy
(J21-9716-03)

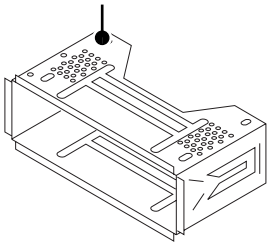

Escutcheon
(B07-3122-01)

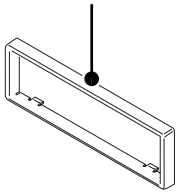

DC cord
(E30-6427-05)

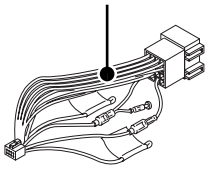

Lever
(D10-4589-04) x2

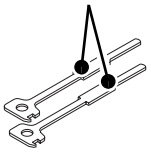

Antenna adaptor
(T90-0523-05)

Carrying case
(W01-1661-05)

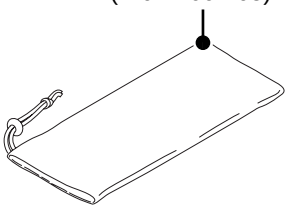

European market products comply with the **RoHS** directive.

This product uses Lead Free solder.

BLOCK DIAGRAM

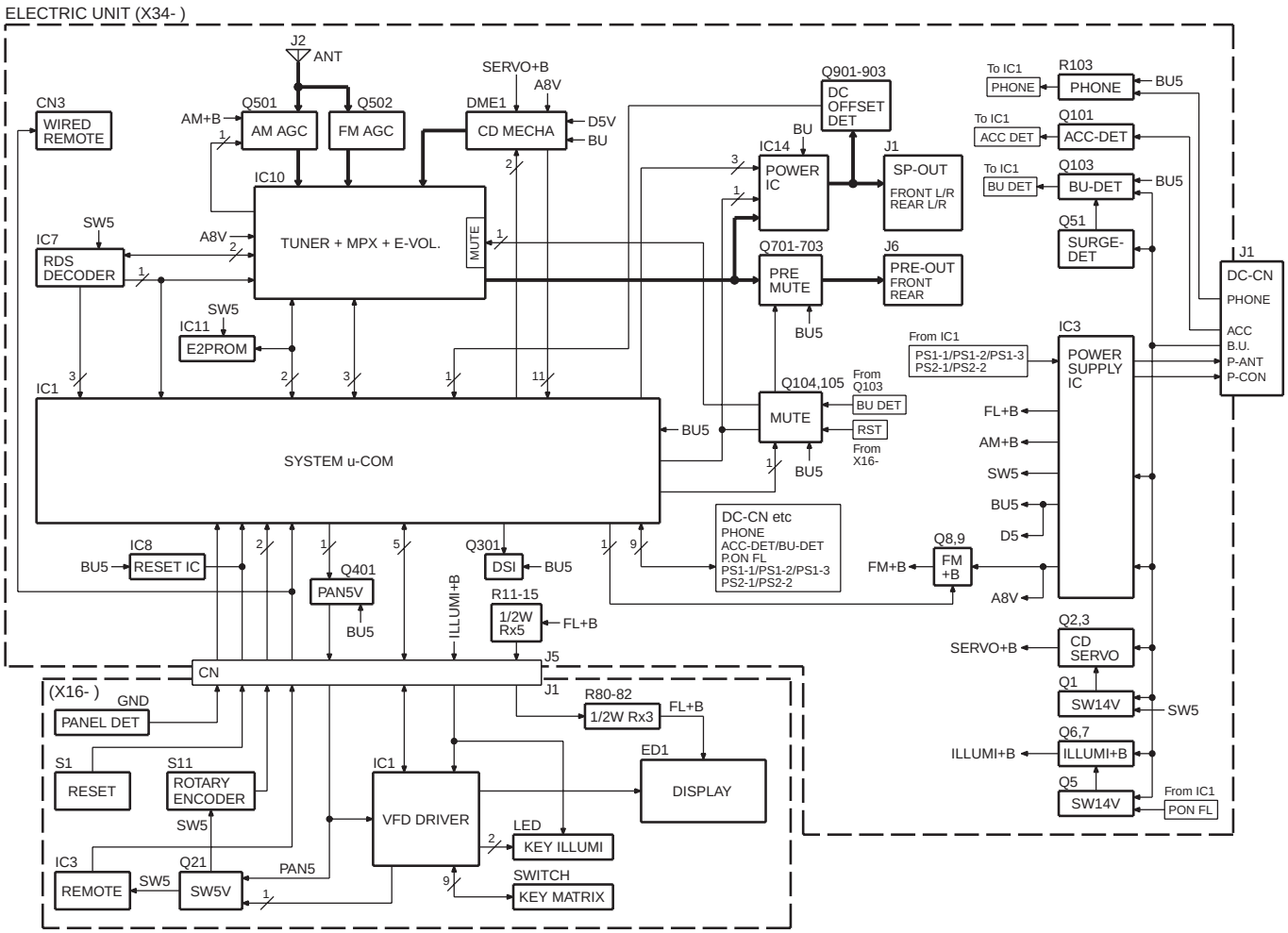

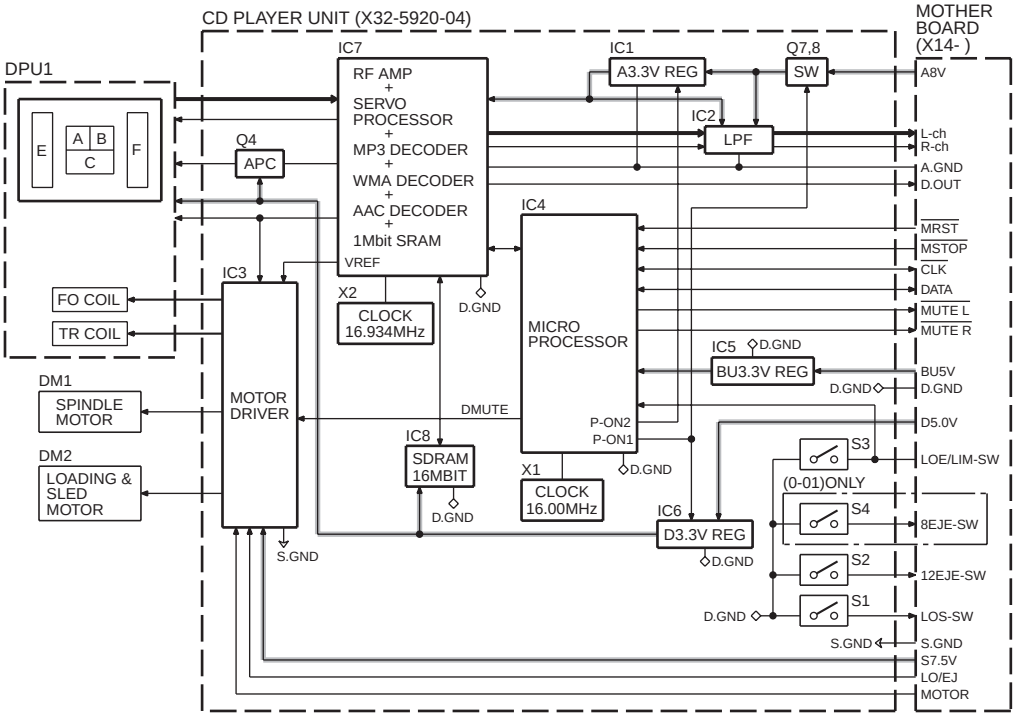

COMPONENTS DESCRIPTION

● ELECTRIC UNIT (X34-433x-xx)

Ref. No.	Application / Function	Operation / Condition
IC1	System μ-COM	System control
IC3	Power Supply IC	DC5V x 1, 7.9V x 1, 8.1V x 2, 10.2V x 1, P-CON, P-ANT output
IC7	RDS Decoder	RDS decoder
IC8	Reset IC	“L”: detection voltage below 3.6V
IC10	E-VOL & Tuner	E-VOL, Tuner, Stereo decoder
IC11	E2PROM	Save & Load for tuner adjust data
IC14	Power IC	Signal amplifier
Q1	14V SW	ON when the base goes “Hi”
Q2	SERVO+B AVR	Output voltage 7.5V
Q3	Control SW for SERVO+B	ON when the base goes “Hi”
Q5	FL+B SW	ON when the base goes “Hi”
Q6	FL+B AVR	Output voltage 11V
Q7	Control SW for FL+B	ON when the base goes “Hi”
Q8	FM+B AVR	Output voltage 8.0V
Q9	Control SW for FM+B	ON when the base goes “Hi”
Q51	SERGE Det.	ON when the base goes “Hi”
Q101	ACC Det.	ON when the base goes “Hi” during ACC is applied
Q103	BU Det.	ON when the base goes “Hi” during BU is applied
Q104,105	MUTE Control	ON when the base goes “Hi”
Q401	Panel 5V SW	ON when the base goes “Lo”
Q501	AM RF Amplifier	Adjusts for gain
Q502	FM RF Amplifier	RF amplifier
Q503	AFS Control	AFS time controller
Q802	Buffer	IC10 QUAL output buffer
Q901	DC OFFSET Det	ON when the base goes “Q902 and Q903’s output separate”
Q902,903	DC OFFSET Det SW	ON when the base goes “IC14’s SP-OUT (DC) separate”

● SWITCH UNIT (X16-350x-xx)

Ref. No.	Application / Function	Operation / Condition
IC1	VFD DRIVER	
Q21	PAN SW5V	“ON” when the base goes “H”

● CD PLAYER UNIT (X32-5920-04)

Ref. No.	Application / Function	Operation / Condition
IC1	A3.3V regulator	Power supply for audio 3.3V
IC2	Low pass filter	
IC3	4ch BTL driver	Driving spindle motor and loading/ejection operation

COMPONENTS DESCRIPTION

Ref. No.	Application / Function	Operation / Condition
IC4	Mechanism μ-com	
IC5	BU3.3V regulator	Power supply for backup 3.3V
IC6	D3.3V regulator	Digital 3.3V power supply
IC7	Audio DAC built-in servo DSP	MP3, WMA, and AAC compatible
IC11	Buffer IC	Level shift
Q1	A3.3V discharge circuit	
Q4	APC (Auto power control)	Adjusts current to be sent to laser
Q5,6	SW 5V	
Q7,8	SW 8V	
D1	APC (Auto power control)	Protects the pick-up laser diode

MICROCOMPUTER'S TERMINAL DESCRIPTION

● SYSTEM μ-com: IC1 (X34-: ELECTRIC UNIT)

Pin No.	Pin Name	I/O	Application	Truth Value Table	Processing / Operation / Description
1	PS2 2	O	Power IC control 2-2	①	Refer to the truth value table
2	PS2 1	O	Power IC control 2-1	①	Refer to the truth value table
3	PS1 1	O	Power IC control 1-1	①	Refer to the truth value table
4	PS1 2	O	Power IC control 1-2	①	Refer to the truth value table
5	PS1 3	O	Power IC control 1-3	①	Refer to the truth value table
6	REMO	I	Remote control signal input		Detect pulse width
7	NC	-	Not used		Fix to output L
8	BYTE	I	Memory extension bus width setting		Connect to VSS
9	CNVSS	-			Connect to VSS. H: Can be changed (Only for FLASH)
10	XCIN	-	32.768kHz		
11	XCOUT	-	32.768kHz		
12	$\overline{\text{RESET}}$	-			L: RESET
13	XOUT	-	10.0MHz		
14	VSS	-			
15	XIN	-	10.0MHz		
16	VCC1	-			
17	NMI	I			Connect to VCC (pull up)

MICROCOMPUTER'S TERMINAL DESCRIPTION

Pin No.	Pin Name	I/O	Application	Truth Value Table	Processing / Operation / Description
18	$\overline{\text{CN DET}}$	I	Panel communication detection		H: Without PANEL, L: With PANEL
19	NC	-	Not used		Fix to output L
20	KEY REQ	I	Communication request form VFD driver		Connect to INT
21	PON FL	O	Key illumi power supply control		ON: H, OFF: L
22	DSI	I/O	DSI control		OFF: Hi-z PANEL detached, Pulse drive ON: H
23	$\overline{\text{PON PANEL}}$	I/O	Panel 5V control		ON: L, Momentary power down, when PANEL detached, 11 minutes after ACC OFF: Hi-z
24~27	NC	-	Not used		Fix to output L
28	PWIC BEEP	O	Beep output		
29	CD SCL	I/O	CD mechanism I2C clock output		
30	CD SDA	I/O	CD mechanism I2C data input/output		
31	VFD SYS DATA	O	VFD data output		Data output
32	VFD PAN DATA	I	VFDINT/data input		INT/data input
33	VFD CL	O	VFD clock output		52kHz
34	VFD INH	O	VFD data blanking output		H: Cancel reset, L: RESET, L: Momentary power down, when PANEL detached, 11 minutes after ACC OFF
35	AUD SDA	I/O	IC10 I2C data input/output		
36	AUD SCL	I/O	IC10 I2C clock input/output		
37	CD MUTE	I	CD MUTE request		L: MUTE request
38	$\overline{\text{CD MSTOP}}$	O	CD mechanism μ-com stop		H: Mechanism μ-com in operation, L: Mechanism μ-com stopped
39	CD LOE LIM SW	I	CD detection (chucking SW)		H: Loading completed, L: Disc not found
40	CD LOEJ	I/O	CD motor control	②	Refer to the truth value table
41	EPM	I	FLASH EPM input		L: Can be changed (Only for FLASH). Connect to VSS (pull down)
42	CD MOTOR	O	CD motor control	②	Refer to the truth value table
43	CD DISC8 SW	I	CD disc detection (8cm)		
44	$\overline{\text{CD MRST}}$	O	CD mechanism μ-com RST		H: Normal, L: Reset
45	CD DISC12 SW	I	CD disc detection (12cm)		
46	VFD CE	O	VFD control request		
47	CD LOS SW	I	CD loading detection		
48,49	NC	-	Not used		Fix to output L
50	ROTARY CW	I	VOL key input		Detect pulse width
51	NC	-	Not used		Fix to output L
52	ROTARY CCW	I	VOL key input		Detect pulse width
53~56	NC	-	Not used		Fix to output L
57	RDS AFS L	O	TUN RDS MUTE output		H: Normal L: FM/AM SEEK, AF search (L: When Tuner SRC Auto Zero)
58	$\overline{\text{TUN ADJ}}$	I	For IC10 adjustment + E2PROM write request		When ADJ=H, PS1-1,2,3=Hi-z, PS2-1,2=Hi-z, TUN DATA, CLK=Hi-z, MUTE=L, E2PROM writing-in
59	TUN SD	I	TUN search stop input		H: Station found, L: Station not found

MICROCOMPUTER'S TERMINAL DESCRIPTION

Pin No.	Pin Name	I/O	Application	Truth Value Table	Processing / Operation / Description
60	TUN FANC OUT	O	TUNER block (in μ-com) check		Only when test mode, E2P OK: H, E2P NG: L, Normal: L
61	PON FM	I/O	FM power supply control		H: When FM is active, Hi-z: When FM is not active
62	VCC2	-			
63	NC	-	Not used		Fix to output L
64	VSS	-			
65	MUTE	I/O	MUTE		L: MUTE OFF, Hi-z: MUTE ON
66	PWIC SVR	O	SVR discharge circuit (Not used)		When momentary power down by POWER OFF, 5 seconds : H, Thereafter: L
67	PWIC STBY	O	Power IC stand-by control		POWER ON: H, POWER OFF: L
68	PWIC MUTE	O	Power IC MUTE		While STANDBY source, Momentary power down: L , While TEL MUTE: L
69~74	NC	-	Not used		Fix to output L
75	RDS CLK	I	RDS decoder CLK input (RDS model only)		
76	TUN TYPE1	I	Destination setting 1	③	Refer to the truth value table
77	TUN TYPE2	I	Destination setting 2	③	Refer to the truth value table
78	TYPE1	I	Destination change	④	Refer to the truth value table
79	TYPE2	I	Destination change	④	Refer to the truth value table
80	TYPE3	I	Destination change	④	Refer to the truth value table
81	RDS NOISE	I	FM noise detection		
82	TUN SMETER	I	S meter input		
83	RDS AFS L 2	O	TUN RDS MUTE output (Not used in circuit, used in software)		H: Normal L: FM/AM SEEK, AF search (L: When Tuner SRC Auto Zero) * Same process with RDS AFS L
84~86	NC	-	Not used		Fix to output L
87	PWIC DC DET	I	DC offset detection		
88	LINE MUTE	I	Line mute detection		TEL MUTE: 1V or lower, NAVI MUTE: 2.5V or higher NAVI MUTE: 1V or lower and 2.5V or higher (J-TYPE)
89,90	NC	-	Not used		Fix to output L
91	RDS DATA	I	RDS decoder DATA input		
92	RDS QUAL	I	RDS decoder QUAL input		
93	NC	-	Not used		Fix to output L
94	$\overline{\text{ACC DET}}$	I	ACC power supply detection		L: ACC ON, H: ACC OFF
95	$\overline{\text{BU DET}}$	I	Momentary power down detection		L: BU found, H: BU not found, momentary power down Activated within 4ms after detection of momentary power down
96	AVSS	-			Connect to VSS
97	REF CON	O	VREF control		Connect to VREF
98	VREF	-			Connect to REF CON
99	AVCC	-			Connect to VCC
100	NC	-	Not used		Fix to output L

MICROCOMPUTER'S TERMINAL DESCRIPTION

Truth Value Table

① : Power supply IC (IC3) control

SEL1 (Pin No. 11)

PS1-2	PS1-3	PS2-1	ILLUMI	P-CON	P-ANT
L	L	L	OFF	OFF	OFF
L	L	H	ON	OFF	OFF
H	L	H	ON	ON	OFF
H	H	H	ON	ON	ON

SEL2 (Pin No. 12)

PS1-1	PS2-2	AUDIO	SW5	AM
L	L	OFF	OFF	OFF
H	L	ON	ON	OFF
H	H	ON	ON	ON

② : CD mechanism control operation

	CD MOTOR	CD LOEJ
Stop	L	L
Load	H	L
Eject	H	H
Brake	H	Hi-z

③ : Destination setting

Model	TYPE 1	TYPE 2
KENWOOD brand model (initial value)	L	L
OEM model (with CRSC changed)	L	H
KENWOOD brand model (with CRSC changed)	H	L
KENWOOD brand model (to support test-driving in EU)	H	H

④ : Destination change

TYPE 3 (Pin 80)	TYPE 2 (Pin 79)	TYPE 1 (Pin 78)	Destination	Model
0	0	0	K	KDC-MP202
0	0	1	J	E313S
0	1	0	E	KDC-3034A/3034AY/W4034A/W4034AY/W410A/W410AY/W3534A
0	1	1	E	KDC-W434A/W40AY
1	0	0	K	KDC-MP2032CR
1	0	1	M	KDC-MP333/MP333RC/MP433
1	1	0	E	KDC-3034G/3034GY/W4034G/W4034GY/W410G/W410GY/W3534G
1	1	1	J/E	E212/E212S/KDC-W40GY/W434G/W434GY

● MECHANISM μ-com : IC4 (X32- : CD PLAYER UNIT)

Pin No.	Pin Name	I/O	Application	Processing Operation Description
1	NC	-	Not used	Low-fixed
2	E2P SCL	I/O	ROM correction E2P I2C clock	
3~5	NC	-	Not used	Low-fixed
6	VDD	-	5V electric potential	
7	GND	-	GND electric potential	
8,9	NC	-	Not used	Low-fixed
10,11	PON1, PON2	O	Power ON/OFF control	H : ON, L : OFF
12	LOE/LIM SW	I	Down-limit SW detection	L : Inner circumference detection
13	DAC MUTE	O	DAC MUTE control	L : MUTE OFF

MICROCOMPUTER'S TERMINAL DESCRIPTION

Pin No.	Pin Name	I/O	Application	Processing Operation Description
14	DAC RST	O	DAC RESET	L : RESET
15	EMPH	O	External DAC Emphasis control	L : Emphasis OFF
16,17	NC	-	Not used	Low-fixed
18	IC/Vpp	-	Write voltage (FLASH)	H : In writing
19	$\overline{\text{MUTE L}}$	O	Lch audio MUTE control	L : MUTE ON, H : MUTE OFF
20	$\overline{\text{MUTE R}}$	O	Rch audio MUTE control	L : MUTE ON, H : MUTE OFF
21	TYPE	I	DAC switching	L : DSP built-in DAC Not used
22	TEST O 1	O	TEST MODE O 1	(Not used)
23	TEST O 2	O	TEST MODE O 2	(Not used)
24	TEST O 3	O	TEST MODE O 3	(Not used)
25	TEST O 4	O	TEST MODE O 4	(Not used)
26	NC	-	Not used	Low-fixed
27	$\overline{\text{WAIT}}$	I	Wait control signal detection	
28~30	NC	-	Not used	Low-fixed
31	$\overline{\text{RESET}}$	I	Reset detection	H : NORMAL, L : RESET
32	XT1	I	Not used	
33	XT2	-	Not used	
34	REGC	-		
35	X2	-		
36	X1	I		
37	Vss	-	GND electric potential	
38	VDD	-	5V electric potential	
39	NC	-	NC	
40	$\overline{\text{WRL}}$	I	Multiplex WRITE signal	
41,42	NC	-	Not used	Low-fixed
43	$\overline{\text{RD}}$	O	Multiplex RD signal	
44	ASTB	O	Multiplex ASTB signal	
45	NC	-	Not used	Low-fixed
46	NC	-	Not used	Low-fixed
47~54	AD0~AD7	I/O	Multiplex address/data	
55	BVdd	-	BUS interface power supply	
56	BVss	-	BUS interface GND	
57~61	AB8~AB12	I/O	Multiplex data/address	
62~65	NC	-	Not used	Low-fixed
66	$\overline{\text{CS}}$	O	Chip select control	H : OFF, L : ON
67	$\overline{\text{DSP RESET}}$	O	DSP reset control	H : NORMAL, L : RESET
68~70	NC	-	Not used	Low-fixed
71	Avdd	-		
72	Avss	-		
73	Avref	I	A/D port reference voltage input	

MICROCOMPUTER'S TERMINAL DESCRIPTION

Pin No.	Pin Name	I/O	Application	Processing Operation Description
74	RAMSEL2	I	With DRAM/No DRAM switching for different models	H : With DRAM, L : No DRAM
75	RAMSEL	I	With DRAM/No DRAM switching for different models	H : With DRAM, L : No DRAM
76	RZM	I	0bit MUTE detection	H : ≥1.7V, L : <1.7V
77	LZM	I	0bit MUTE detection	H : ≥1.7V, L : <1.7V
78	AAC	I	AAC compatibility switching	H : AAC non-compatible, L : AAC compatible
79	ASEL	I	Audio output polarity switching	H : Reverse output, L : Non-reverse output
80	E2P WR	I	E2PROM write switching	H : E2PROM WRITE, L : NORMAL
81	TEST I 0	I	TEST MODE I 0	(Not used)
82	TEST I 1	I	TEST MODE I 1	(Not used)
83	TEST I 2	I	TEST MODE I 2	(Not used)
84	TEST I 3	I	TEST MODE I 3	(Not used)
85,86	NC	-	Not used	Low-fixed
87	$\overline{\text{MSTOP}}$	I	Standby restart interruption	H : STOP release, L : STOP
88	INTSV	I	Interruption from servo IC	H : Interruption
89~92	NC	-	Not used	Low-fixed
93	$\overline{\text{D-MUTE}}$	O	Driver MUTE	H : OFF, L : ON
94	SYS SDA	I/O	System μ-com I2C data	
95	NC	-	Not used	Low-fixed
96	SYS SCL	I/O	System μ-com I2C clock	
97~99	NC	-	Not used	Low-fixed
100	E2P SDA	I/O	ROM correction E2P I2C data	

TEST MODE

● How to enter the test mode

Press and hold the [1] and [3] keys and reset.

● How to clear the test mode

Reset, momentary power down, Acc OFF, Power OFF, detach the panel.

● Test mode default condition

- Source is STANDBY.
- Display lights are all turned on.
- The volume is at -10dB (The display is 30).
- LOUD is OFF.
- CRSC is off regardless of the availability of switching function.
- SYSTEM Q (dB equalizer) is NATURAL (=FLAT).
- BEEP should always functions when the key is pressed.

● Specification of test mode for tuner

- TUNER mode [4] key frequency shall be 98.3MHz.

● CD receiver test mode specification

- Display mode default setting shall be P-TIME.
- Jumps to the following tracks by pressing the [▶▶I]key.
  No. 9 → No. 15 → No. 10 → No. 11 → No. 12 → No. 13 → No. 22 → No. 14 → No. 9 (recursive)
  Note that when playing an MP3 / WMA / AAC disc with 8 files or less, the disc is played from the 1st track in the normal order.
- Pressing the [I◀◀] key goes back by 1 track from the track being played.
- While in CD source, press the [1] key to jump to No. 28.
- While in CD source, press the [2] key to jump to No. 14.
- While in CD source, press the [3] key to display the CD mechanism model name and the version. Press the [3] key again to go back to the normal screen. (Time code display)

  MP3 CD mechanism

  6 6 8 0 : 0 1 2 3

  Model name Version

  Normal CD mechanism

  N O R M : C D

- When CD is the source, press the [6] key to jump to No. 15. At this time, the volume value is set to 25.

● AUDIO adjust mode

- Press the [AUD] key and enter the audio adjustment mode.
- Press the remote controller [∗] key and [AUD] key to go into the audio adjustment mode.
- Both AUDIO FUNCTION MODE and SETUP MODE adjustment items are included.
- By pressing [AUD] key and then [FM] key, switch the item to be adjusted in the following order.
  The default item shall be Fader, and then the item is forwarded in the following order: Balance → Bass Level → Middle Level → Treble Level (thereafter arbitrary).
- Continuous forwarding by remote controller is prohibited.
- Fader is adjusted by the VOL knob and [I◀◀] / [▶▶I] keys in 3 steps: R15 ↔ 0 ↔ F15. (Default value: 0)
- Balance is adjusted by the VOL knob and [I◀◀] / [▶▶I] keys in 3 steps: L15 ↔ 0 ↔ R15. (Default value: 0)
- Bass/Middle/Treble Level are adjusted by the VOL knob and [I◀◀] / [▶▶I] keys in 3 steps: -8 ↔ 0 ↔ +8. (Default value: 0)
- Volume Offset is adjusted by the VOL knob and [I◀◀] / [▶▶I] keys in 2 steps: -8 ↔ 0. (Default value: 0)
- Loudness ON/OFF is adjusted by the VOL knob and [I◀◀] / [▶▶I] keys in 2 steps: OFF ↔ ON. (Default value: OFF)

● MENU

- Press the [Q] key to enter the MENU.
- Press the remote controller [DNPP/SBF] key or the [DIRECT] key to enter the MENU.
- Continuous forwarding by remote controller is prohibited.

● Backup current measurement

If reset while in Acc OFF (Back Up ON) condition, MUTE terminal goes off 2 seconds later, rather than 15 seconds. (During this time, the CD mechanism does not function.)

● Fluorescent tube (ED1) short-checking

- When the source is STANDBY, press the [ATT] key to switch the process in the following order.
  1. All lights off.
  2. Every 125msec, light the odd and even number of the grid with the largest numbers.
  3. Light only odd number terminals.
  4. Light only even number terminals.
  5. All lights on.

  * After the step 5 above, the process goes back to the step 1 and then repeats the steps.

● Initializing AUDIO-related setting value

Press the [▶▶I] key in the STANDBY source and reset the AUDIO setting value to the test mode default value.

TEST MODE

● Other

- When started in Test Mode, duration of prohibiting LINE MUTE shall be changed from 10 seconds to 1 second.
- When in Test Mode, when DC offset error detection is run, the detection information is not written into the E2PROM.

● Special displays while all lights are on

When all lights are on with STANDBY source, if the following keys are pressed, the following messages are displayed.

[1] key	Version is displayed (forwarding) (Display) TYPE : x_ _ _ ("x" is displayed in hexadecimals) → 558K – 2.05 ("development ID" – "version") → all lights on → ∗ TYPE indicates μ-com destination, and shows real-time condition of the destination terminal.
[2] key	All lights ON.
[3] key	Key pressed: Power ON time is displayed. While Power ON time is displayed, press and hold for 2 seconds or longer to clear the Power ON time. (Display) PON_0Hxx (00~50 is displayed for "xx") xxxxx (00001~10922 is displayed for "xxxxx") MAX 10922 (hours)
[4] key	Key pressed: CD operation time is displayed. Press the key for more than 2 seconds while the CD operation time is displayed to clear CD operation time. (Display) CDT_0Hxx (00~50 is displayed for "xx") xxxxx (00001~10922 is displayed for "xxxxx") MAX 10922 (hours)
[5] key	Key pressed: Number of CD EJECT time is displayed. While the CD EJECT times is displayed, press and hold for 2 seconds or longer to clear the CD EJECT time. (Display) EJCxxxxx MAX 65535 (times)
[6] key	Key pressed: Number of times PANEL is opened/closed is displayed. Press the key for more than 2 seconds while the PANEL open/close count is displayed to clear the PANEL open/close count. (Display) PC_xxxxx MAX 65535 (times)
[FM] key	ROM correction version is displayed (Display) ROM_R123 ROM_R – – – (When not written in) ROM_R ∗ ∗ ∗ (When data not matching)
[AM] key	IC10 adjustment status "E2P_OK": Adjustment completed "E2P_ER": E2PROM values are still default (not determined) "I2C_ER" : Communication not possible between IC10 and E2PROM. ∗ If "E2P_OK", Pin 60 (TUN FANC OUT) should be output as "H".
[▶▶I] key	AUDIO data initialization (Display) AUD_INIT
[I◀◀] key	Key pressed: Forced Power OFF data displayed. While the forced power OFF data is displayed, press and hold for 2 seconds or longer to clear the data. (Display) POFF_ – – – (No Forced Power OFF) PNL (Forced Power OFF because of system μ-com panel communication error)
[▶II] key	Key pressed: CD information display mode ON/OFF While in CD information display mode, press and hold for 2 seconds or longer to clear all CD information. ∗ Please refer to the next table.

CD information display mode

[AM] key ↑	I2C communication condition display (Display) I2C_OK_ _ NG
	CD mechanism error log display (switched by [I◀◀] / [▶▶I] keys) (Display) MCERR1_: x x ↔ MCERR2_: x x ↔ MCERR3_: x x ↔ MCERR1_: x x ↔ ("– –" or the error code is displayed for "xx")
	CD loading error log display (switched by [I◀◀] / [▶▶I] keys) (Display) LDERR1_: x x ↔ LDERR2_: x x ↔ LDERR1_: x x ↔ (Number of times is displayed for "xxx")
	CD ejection error log display (switched by [I◀◀] / [▶▶I] keys) (Display) EJERR1_: x x ↔ EJERR2_: x x ↔ EJERR3_: x x ↔ EJERR4_: x x ↔ EJERR1_: x x ↔ (Number of times is displayed for "xxx")
	CD time code error count data display (missing counts) (switched by [I◀◀] / [▶▶I] keys) (Display) CNT_LOSE ↔ CDDA_xxx ↔ CDROMxxx ↔ CNT_LOSE ↔ (Number of times is displayed for "xxx")
↓ [FM] key	CD time code error count data display (count not updated) (switched by [I◀◀] / [▶▶I] keys) (Display) CNT_STAY ↔ CDDA_xxx ↔ CDROMxxx ↔ CNT_STAY ↔ (Number of times is displayed for "xxx")

TEST MODE

● Clearing CD mechanism information and service information (Clearing E2PROM data)

1. While pressing the [Q] key and [ATT] key, reset-start to start CD mechanism and service information initialization.
   [CD mechanism information]
   • Displays I2C communication condition
   • Displays CD mechanism error log
   • Displays CD loading error data.
   • Displays CD ejection error data
   • Displays CD time code error count data (missing count)
   • Displays CD time code error count data (count not updated)
   [Service information]
   • Displays power ON time is displayed
   • Displays CD operation time
   • Displays number of CD EJECT times
   • Displays number of times panel was opened/closed
   • Displays forced Power OFF data
2. After the initialization process is completed, the following is displayed.
   Normal termination : “CD_O_ _ _”
   Abnormal termination : “CD_X_ _ _”
3. This mode is cancelled by resetting. (The last screen will not be retained.)

● Clearing DC offset error detection data (E2PROM data clearing)

If DC voltage difference (DC offset error) is detected between audio power amplifier (power IC) ± outputs, “DC_ERR_ _” is displayed on the display. When this occurs, the audio is forced-mute and the display displays only “DC_ERR_ _”.
Once this product detected a DC offset error, even if it is restarted (or reset), its display displays “DC_ERR_ _”.
However, if the error is detected while in Test Mode, it is not saved in E2PROM.

1. Press and hold [3] and [6] keys and reset-start to go into the DC offset error display mode.
2. While in STANDBY source, the current DC offset error condition is displayed.
   When detected : “DC_ERR_ _”
   When not detected : “DC_OK_ _ _”
3. While error condition is being displayed, press [AUTO] / [TI] key to clear the detection data. (Clear E2PROM)
4. DC offset error display mode is cancelled by resetting. (The last screen will not be retained.)

● IC10 (X34-) Stereo adjustment (VCO adjustment)

While in test mode and all lights are lit (STANDBY), press and hold [1] key and press [6] key for 3 seconds or longer. (Adjusted data will be written on E2PROM.)

● Settings for OEM

Use pin 2 on the μ-com terminal to support OEM models.

TUN TYPE1 (Pin 76)	TUN TYPE2 (Pin 77)	Description
Low	Low	① KENWOOD brand model
High	Low	② KENWOOD brand model (with CRSC changed)
Low	High	③ OEM model (with CRSC changed)
High	High	④ OEM model (CRSC & de-emphasis changed)

ADJUSTMENT

1. IC10 (X34-) -The Tuner adjustment method

- When IC10 and its circumference are repaired, according to the following order, it readjusts if needed.
- The adjustment item changes with parts to exchange. Please refer to "Parts vs Adjustment item table".

1-1. VCO coil adjustment - adjustment of tunning voltage

Voltage Check Point : Vt-Check Land (PWB Side B, around D506)
Adjustment Coil : L507 (VCO Coil)
The adjustment method : VCO coil is turned and adjusted according to the following tables.

Type	Mode	freq.	Voltage	Fig.
E/M	AM	1611kHz	5.5 ± 0.1(V)	2, 3 (C)
K	AM	1700kHz	5.8 ± 0.1(V)	2, 3 (C)
J	FM	90.0MHz	5.6 ± 0.1(V)	2, 3 (C)

M : AM Adjustment
For Your Information : The frequency of this unit is only set up by preset key in case this adjustment

1-2. Adjustment of 1st & 2nd-MIX coil

Voltage Check Point : S-METER-Check Land (PWB Side B, around R216)
Adjustment Coil : 1st IFT=L508 / 2nd IFT=L509
Setting of Signal Generator : Refer to the following tables

Type	Mode	freq.	Mod.	ANT Input	Fig.
K	AM	1000kHz	OFF	35dBμEMF	1~3 (B),(C)
E/M/J	AM	999kHz	OFF	35dBμEMF	1~3 (B),(C)

① The appearance and the coil with which S-METER DC voltage serves as the maximum are turned and adjusted in the above-mentioned SG input.
② By the above-mentioned adjustment method, same adjustment is performed to both sides (1st & 2nd MIX Coil).

1-3. Adjustment of FM ANT & RF coil

Voltage Check Point : S-METER-Check Land (PWB Side B, around R216)
Adjustment Coil : ANT Coil = L505
RF Coil = L506
Setting of Signal Generator : Refer to the following tables

Type	Mode	freq.	Mod.	ANT Input	Fig.
E/M	FM	87.5MHz	OFF	5dBμV or 11dBμEMF	1~3 (A),(C)
K	FM	87.9MHz	OFF	5dBμV or 11dBμEMF	1~3 (A),(C)
J	FM	76.0MHz	OFF	5dBμV or 11dBμEMF	1~3 (A),(C)

① The appearance and the coil with which S-METER DC voltage serves as the maximum are turned and adjusted in the above-mentioned SG input.
② By the above-mentioned adjustment method, same adjustment is performed to both sides (ANT & RF Coil).

1-4. Adjustment of STEREO (adjustment of 456k-VCO)

Adjust in TEST MODE

- How to enter the test mode
  Refer to “TEST MODE”.
- Adjustment method
  While in test mode and all lights are lit (STANDBY), press and hold [1] key and press [6] key for 3 seconds or longer. (Adjusted data will be written on E2PROM.)
  Effect of adjustment is in cofirmation of adjustment status at Preset [AM] key.
- Display of Preset [AM]
  Adjustment OK: “E2P OK” (14-segment display model)
  Adjustment NG: “E2P ERR” (14-segment display model)
- How to clear the test mode
  Refer to “TEST MODE”.

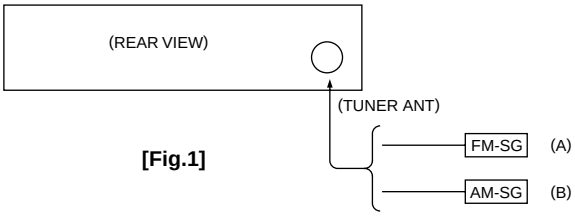

[Fig.1]

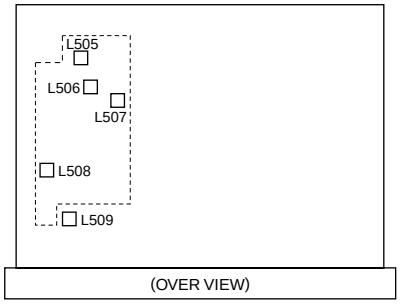

[Fig.2]

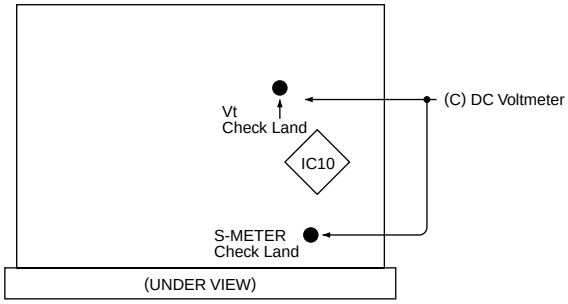

[Fig.3]

ADJUSTMENT

2. IC10 (X34-) Replacement - Parts vs Adjustment Item Table

- When the parts in the following tables are exchanged, please readjust according to a table.
- When other parts are exchanged, please perform only a check of operation. There is no necessity for readjustment.

Replacement parts		Adjustment Item					
Ref. Number	Parts Name	VCOVt	1st MIX	2nd MIX	ANT Coil	RF Coil	Stereo
IC10	E-VOL & Tuner	YES	YES	YES	YES	YES	YES
IC11	E2PROM	YES	YES	YES	YES	YES	YES
L505	Antenna Coil				YES		
L506	RF Coil					YES	
L507	VCO Coil	YES	YES	YES	YES	YES	
L508	1st MIX Coil		YES				
L509	2nd MIX Coil			YES			
D504	Variable Capacitance Diode	YES	YES	YES	YES	YES	
D505	Variable Capacitance Diode	YES	YES	YES	YES	YES	
D506	Variable Capacitance Diode	YES	YES	YES	YES	YES	
X501	X’tal						

- The “ YES ” mark shows that the adjustment is needed.

PC BOARD
(COMPONENT SIDE VIEW)

SWITCH UNIT
X16-350x-xx (J76-0166-02)

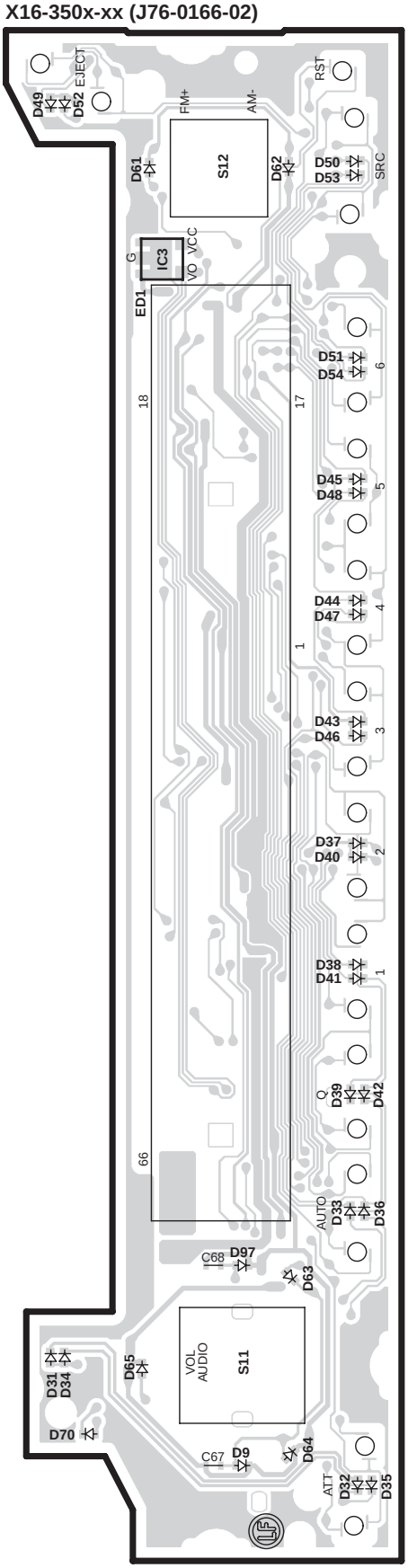

(FOIL SIDE VIEW)

SWITCH UNIT
X16-350x-xx (J76-0166-02)

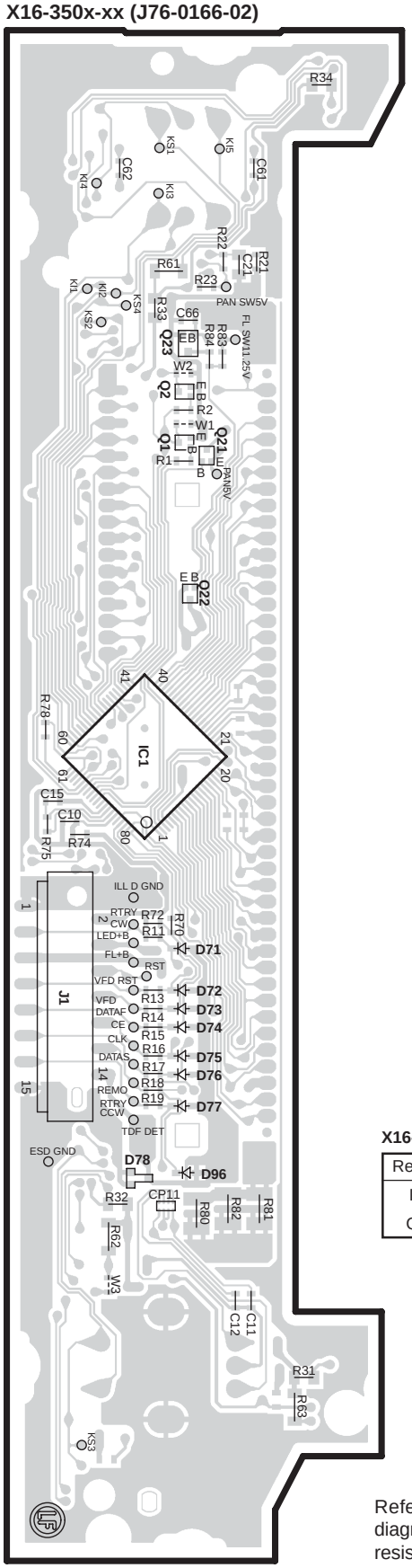

X16-350x-xx

Ref. No.	Address
IC1	3D
Q21	3D

Refer to the schematic diagram for the values of resistors and capacitors.

PC BOARD (FOIL SIDE VIEW)

ELECTRIC UNIT X34-433x-xx (J76-0216-02)

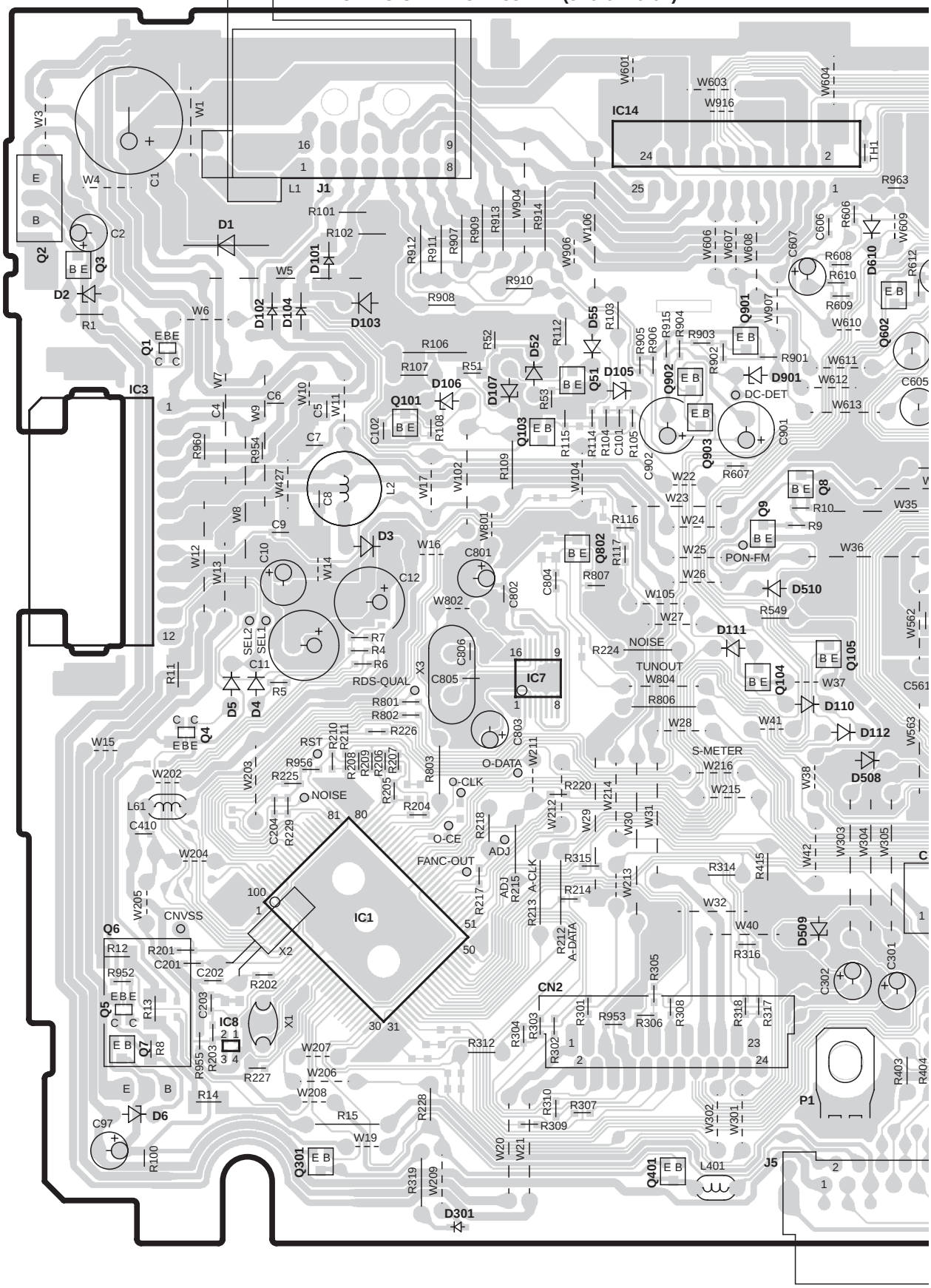

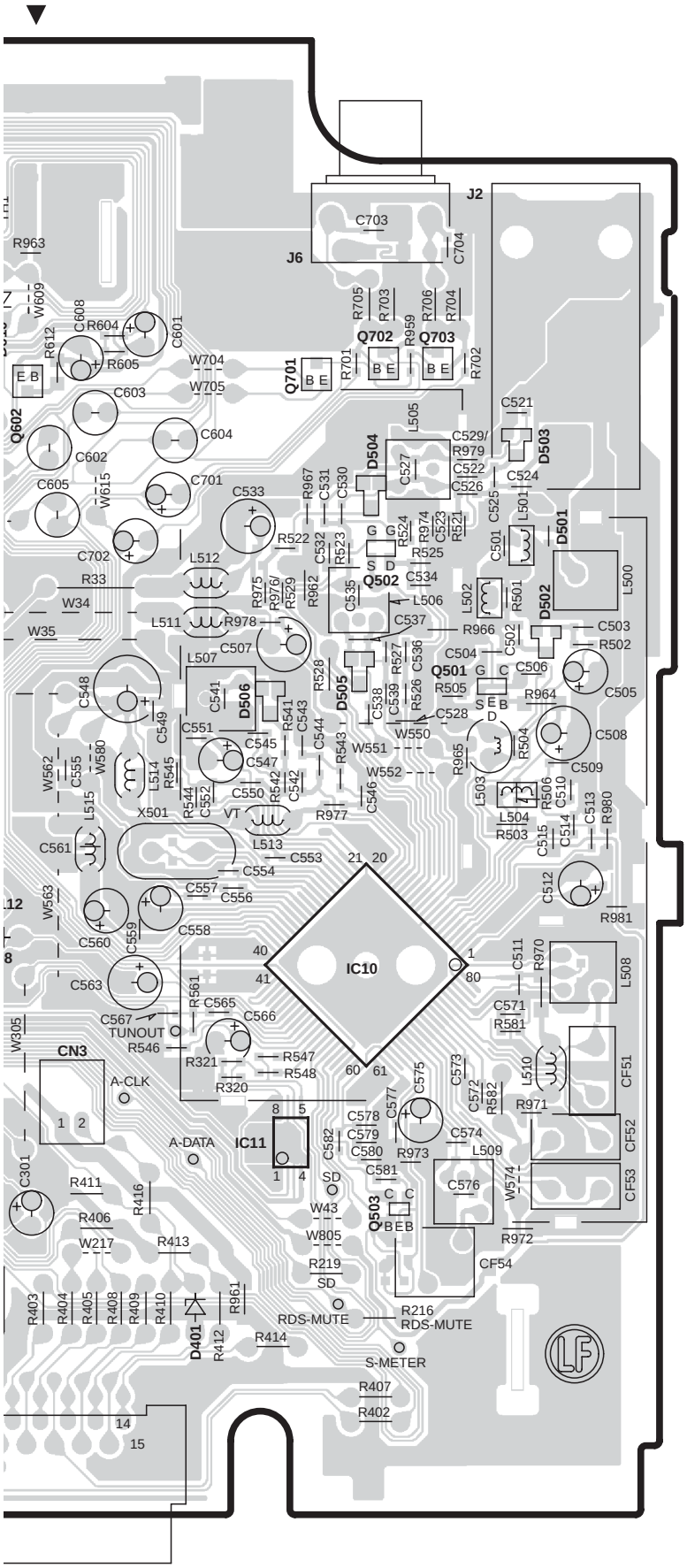

X34-433x-xx

Ref. No.	Address
IC1	5H
IC3	3G
IC7	4I
IC8	6G
IC10	5L
IC11	6K
IC14	2I
Q1	3G
Q2	2F
Q3	3G
Q5	6G
Q6	6G
Q7	6G
Q8	4J
Q9	4J
Q51	3I
Q101	3H
Q103	3I
Q104	4J
Q105	4J
Q401	7I
Q501	4L
Q502	3L
Q503	6L
Q802	4I
Q901	3J
Q902	3I
Q903	3I

Refer to the schematic diagram for the values of resistors and capacitors.

PC BOARD (COMPONENT SIDE VIEW)

CD PLAYER UNIT X32-5920-04 (J76-0231-12)

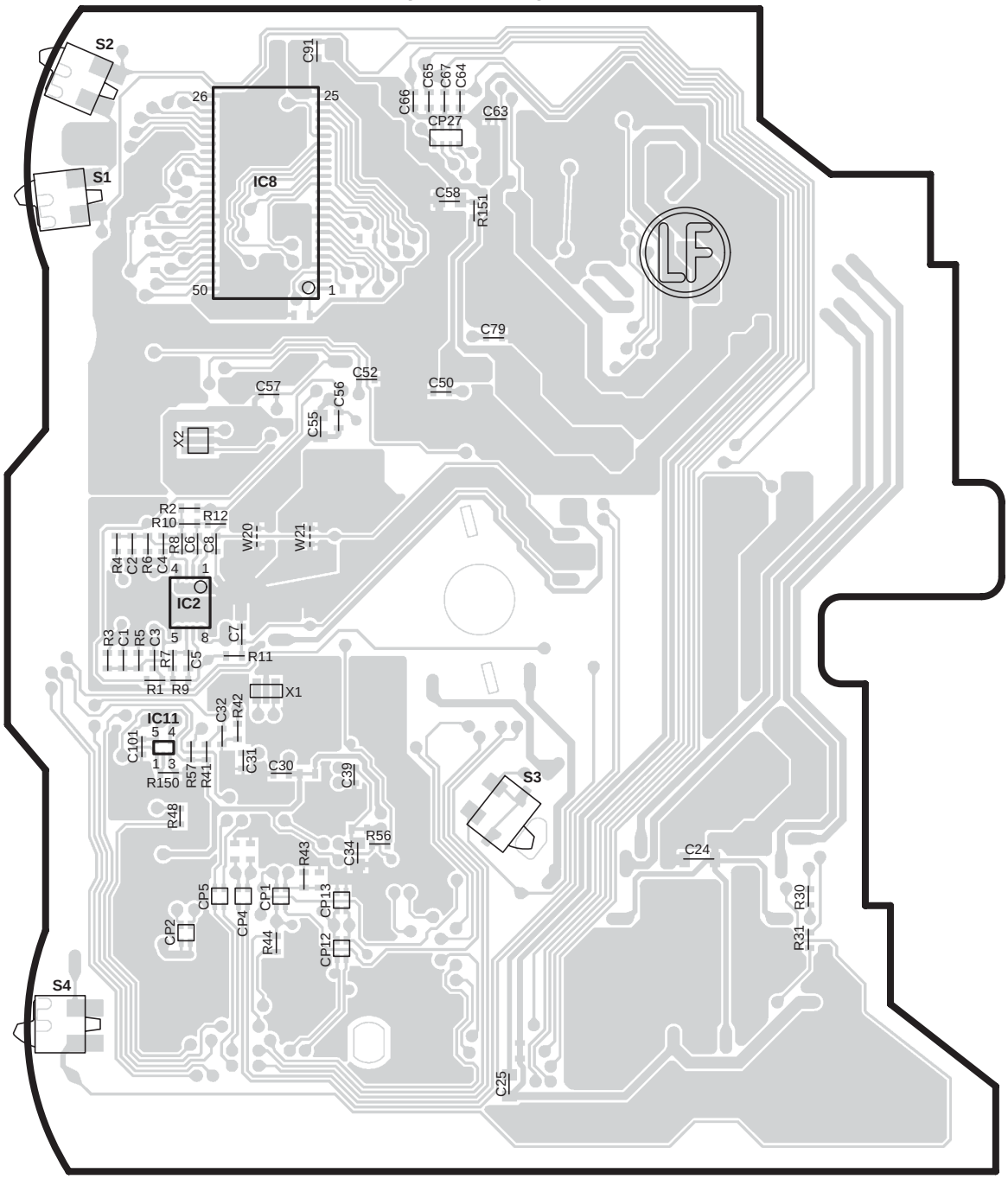

X32-5920-04

Ref. No.	Address
IC2	4Q
IC11	4Q

Refer to the schematic diagram for the values of resistors and capacitors.

PC BOARD (FOIL SIDE VIEW)

CD PLAYER UNIT X32-5920-04 (J76-0231-12)

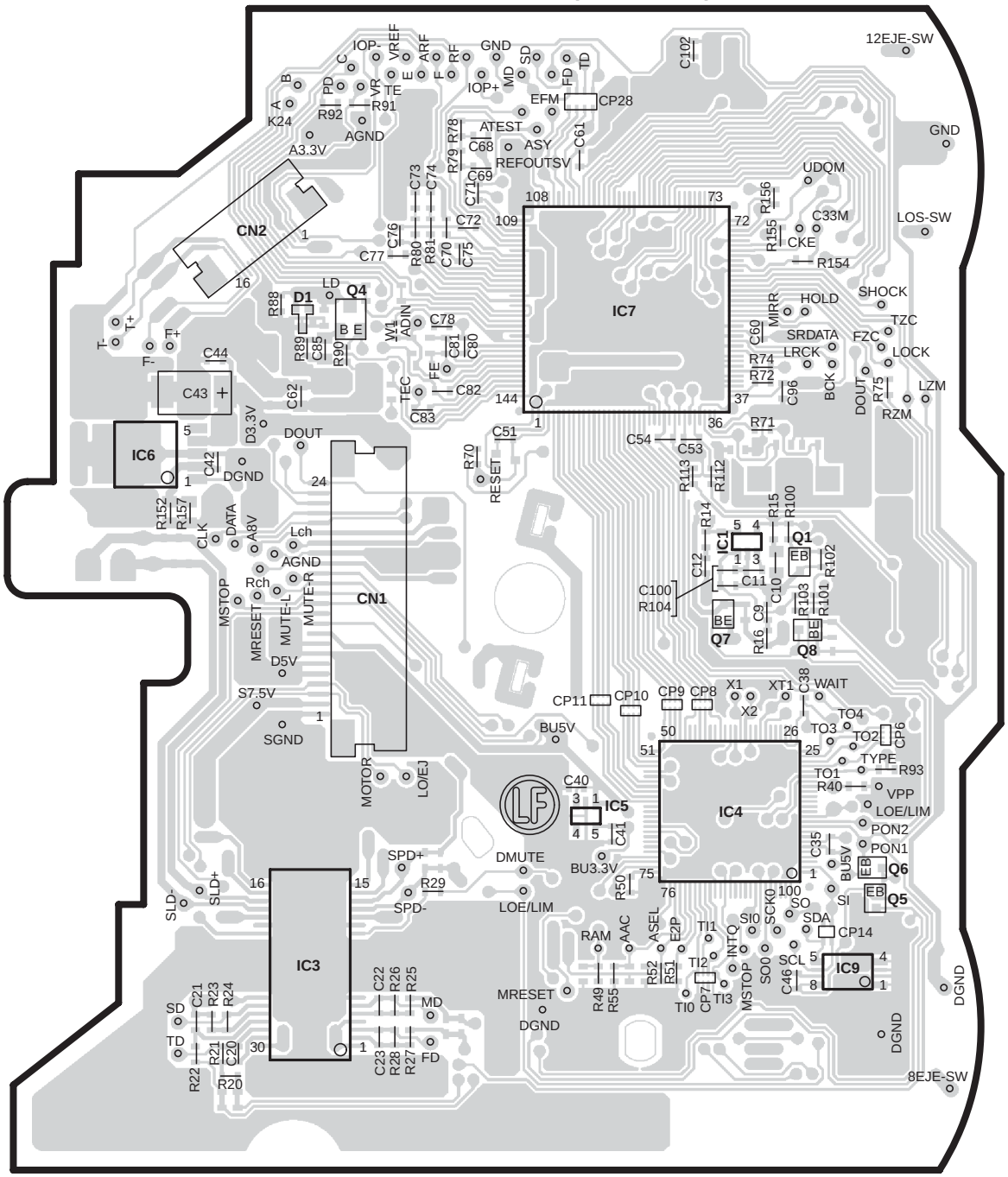

X32-5920-04

Ref. No.	Address	Ref. No.	Address
IC1	3X	Q1	3X
IC3	5V	Q4	2V
IC4	4X	Q5	5X
IC5	4W	Q6	5X
IC6	3U	Q7	4X
IC7	3W	Q8	4X

Refer to the schematic diagram for the values of resistors and capacitors.

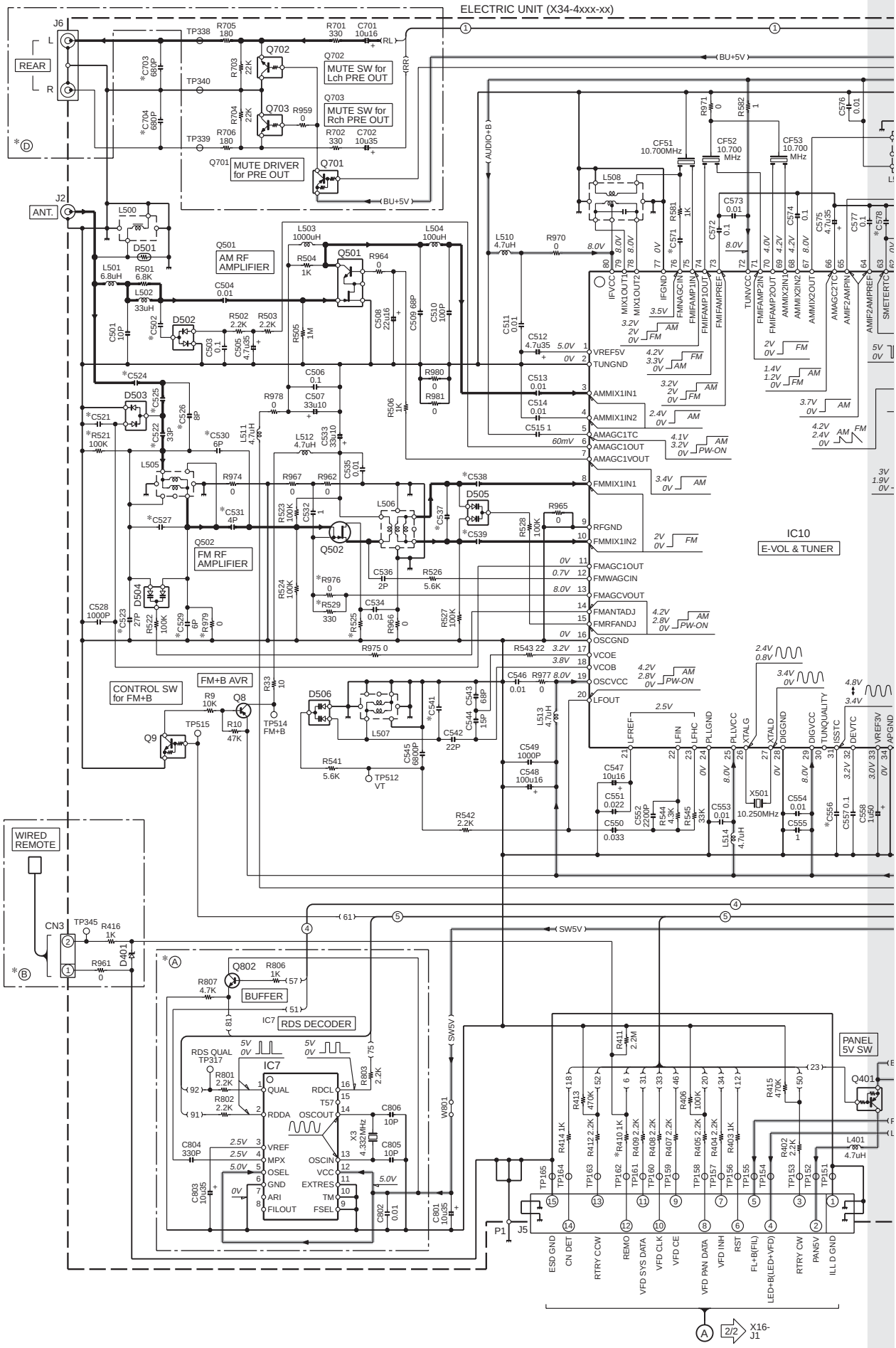
ELECTRIC UNIT (X34-4xxx-xx)
REAR
ANT.
MUTE SW for Lch PRE OUT
MUTE SW for Rch PRE OUT
MUTE DRIVER for PRE OUT
AM RF AMPLIFIER
FM RF AMPLIFIER
IC10
E-VOL & TUNER
CONTROL SW for FM+B
FM+B AVR
WIRED REMOTE
BUFFER
IC7
RDS DECODER
PANEL 5V SW
BU+5V
SW5V
X16-J1

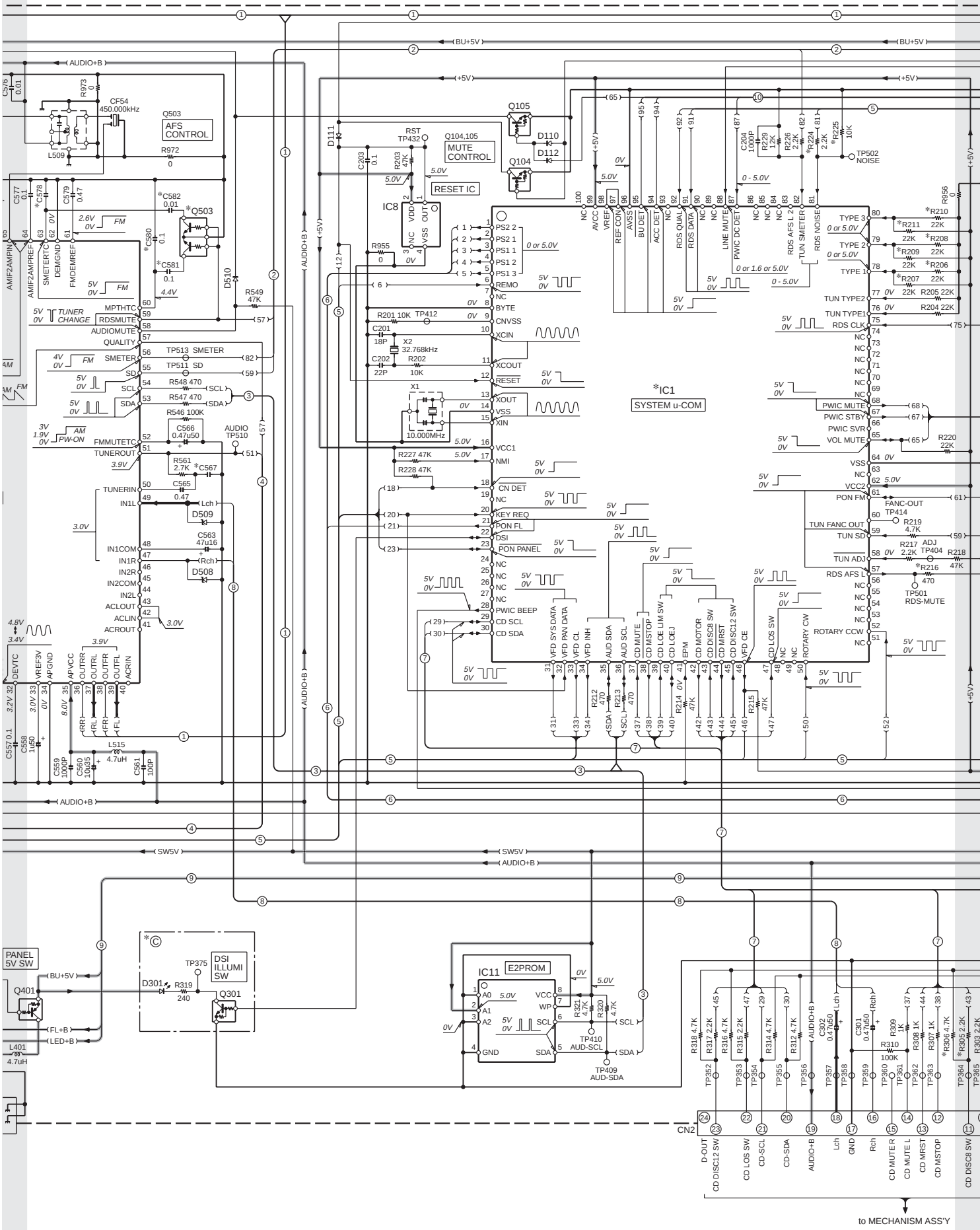
F
G
H
I
J
AFS CONTROL
MUTE CONTROL
RESET IC
SYSTEM u-COM
E2PROM
DSI ILLUMI SW
PANEL 5V SW
TUNER CHANGE
TP502 NOISE
TP501 RDS-MUTE
TP414 FANC-OUT
TP410 AUD-SCL
TP409 AUD-SDA
CN2
to MECHANISM ASS'Y

KDC-W3534A/W3534G
KDC-W40AY

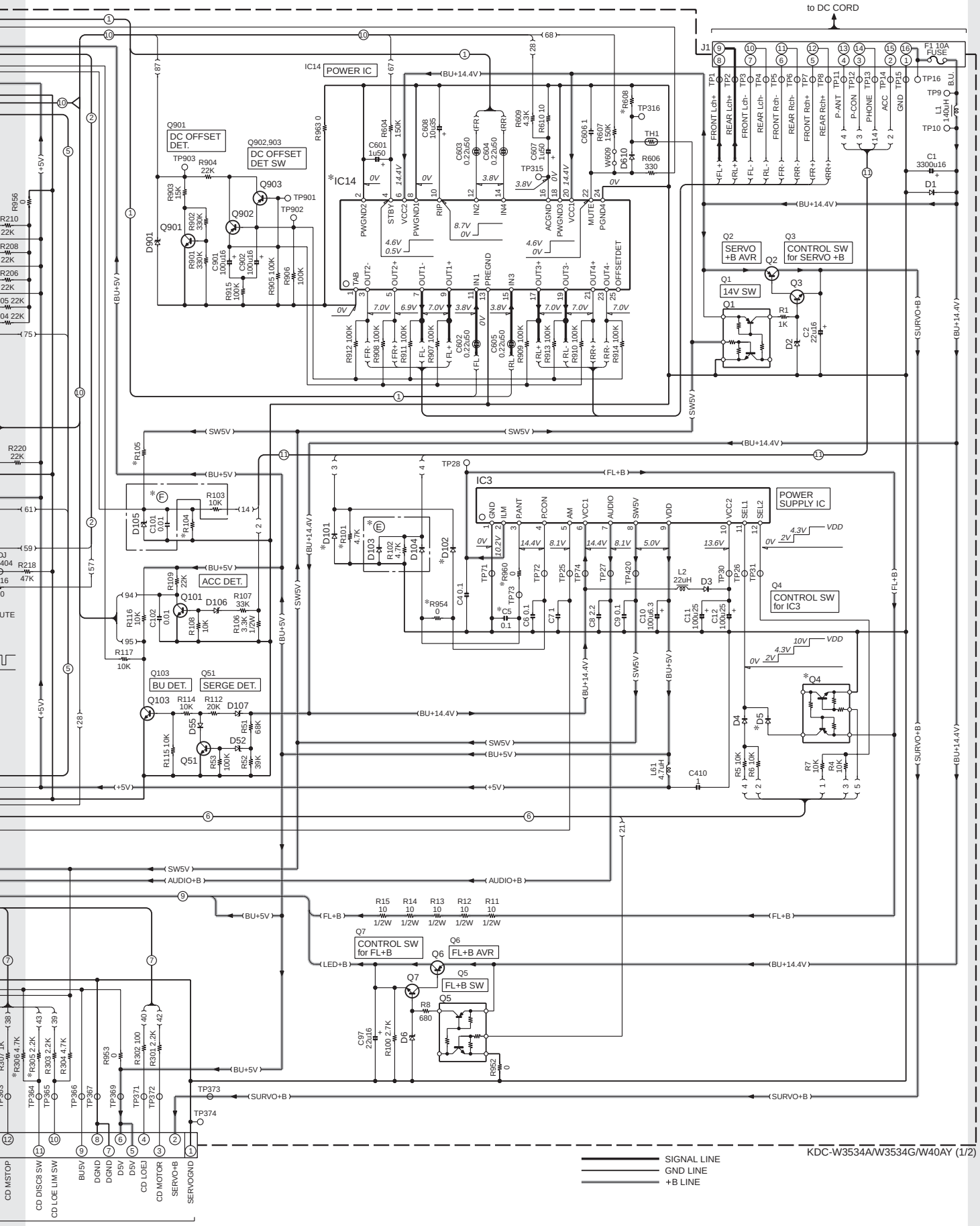

KDC-W3534A/W3534G/W40AY (1/2)

SIGNAL LINE
GND LINE
+B LINE

MODEL	DESTI-NATION	UNIT No.	Ⓐ	Ⓑ	Ⓒ	Ⓓ	Ⓔ	Ⓕ	C5	C502	C521	C522	C523, 529,531	C524	C525	C526, 530	C527	C537	C538, 539	C541
E212/S	J/J1	X34-4090-02	—	—	—	—	YES	YES	—	0.01	0.47	—	—	22P	1000P	YES	10P	15P	4P	1P
E313S	J2	X34-4090-01	—	—	—	—	YES	YES	—	0.01	0.47	—	—	22P	1000P	YES	10P	15P	4P	1P
KDC-MP202	K1	X34-4090-11	—	—	YES	YES	—	YES	—	1500P	0.1	YES	YES	100P	0.01	—	5P	4P	8P	4P
KDC-MP2032CR	K2	X34-4090-13	—	—	YES	YES	—	YES	—	1500P	0.1	YES	YES	100P	0.01	—	5P	4P	8P	4P
KDC-MP333/RC	M1/M3	X34-4090-20	—	—	—	YES	YES	YES	YES	1500P	0.1	YES	YES	100P	0.01	—	5P	4P	8P	4P
KDC-MP433	M2	X34-4090-21	—	—	YES	YES	YES	YES	YES	1500P	0.1	YES	YES	100P	0.01	—	5P	4P	8P	4P
KDC-3034A/AY	E2/E4	X34-4332-75	YES	YES	YES	YES	YES	YES	—	1500P	0.1	YES	YES	100P	0.01	—	5P	4P	8P	4P
KDC-3034G/GY	E3/E5	X34-4332-76	YES	YES	YES	YES	YES	YES	—	1500P	0.1	YES	YES	100P	0.01	—	5P	4P	8P	4P
KDC-W4034A	E	X34-4332-70	YES	YES	YES	YES	YES	YES	—	1500P	0.1	YES	YES	100P	0.01	—	5P	4P	8P	4P
KDC-W4034AY	E2	X34-4332-77	YES	YES	YES	YES	YES	YES	—	1500P	0.1	YES	YES	100P	0.01	—	5P	4P	8P	4P
KDC-W4034G	E1	X34-4332-71	YES	YES	YES	YES	YES	YES	—	1500P	0.1	YES	YES	100P	0.01	—	5P	4P	8P	4P
KDC-W4034GY	E3	X34-4332-78	YES	YES	YES	YES	YES	YES	—	1500P	0.1	YES	YES	100P	0.01	—	5P	4P	8P	4P
KDC-W410A	E4	X34-4332-70	YES	YES	YES	YES	YES	YES	—	1500P	0.1	YES	YES	100P	0.01	—	5P	4P	8P	4P
KDC-W410AY	E6	X34-4332-77	YES	YES	YES	YES	YES	YES	—	1500P	0.1	YES	YES	100P	0.01	—	5P	4P	8P	4P
KDC-W410G	E5	X34-4332-71	YES	YES	YES	YES	YES	YES	—	1500P	0.1	YES	YES	100P	0.01	—	5P	4P	8P	4P
KDC-W410GY	E7	X34-4332-78	YES	YES	YES	YES	YES	YES	—	1500P	0.1	YES	YES	100P	0.01	—	5P	4P	8P	4P
KDC-W40GY	E9	X34-4332-74	—	—	—	—	YES	YES	—	1500P	0.1	YES	YES	100P	0.01	—	5P	4P	8P	4P
KDC-W434A	E6	X34-4332-73	—	—	—	—	YES	YES	—	1500P	0.1	YES	YES	100P	0.01	—	5P	4P	8P	4P
KDC-W434G	E7	X34-4332-74	—	—	—	—	YES	YES	—	1500P	0.1	YES	YES	100P	0.01	—	5P	4P	8P	4P
KDC-W434GY	E8	X34-4332-72	—	—	—	—	YES	YES	—	1500P	0.1	YES	YES	100P	0.01	—	5P	4P	8P	4P
KDC-W40AY	E7	X34-4332-73	—	—	—	—	YES	YES	—	1500P	0.1	YES	YES	100P	0.01	—	5P	4P	8P	4P
KDC-W3534A	E8	X34-4332-79	YES	—	—	—	YES	—	—	1500P	0.1	YES	YES	100P	0.01	—	5P	4P	8P	4P
KDC-W3534G	E9	X34-4333-71	YES	—	—	—	YES	—	—	1500P	0.1	YES	YES	100P	0.01	—	5P	4P	8P	4P

MODEL	DESTI-NATION	UNIT No.	C556	C567	C571	C578	C580	C581, 582	C703, 704	D5	D101, 102	IC1	IC14	Q4	Q503	R101, 521,976	R104
E212/S	J/J1	X34-4090-02	0.1	820P	3P	0.01	YES	—	—	—	—	30302MAPA13FP	TB2903HQ	—	—	—	47K
E313S	J2	X34-4090-01	0.1	820P	3P	0.01	YES	—	—	—	—	30302MAPA12FP	TB2903HQ	—	—	—	47K
KDC-MP202	K1	X34-4090-11	0.1	820P	2P	0.01	YES	—	—	—	YES	30302MAPA12FP	TB2904HQ	—	—	YES	22K
KDC-MP2032CR	K2	X34-4090-13	0.1	820P	2P	0.01	YES	—	—	—	YES	30302MAPA12FP	TB2904HQ	—	—	YES	22K
KDC-MP333/RC	M1/M3	X34-4090-20	0.1	820P	2P	0.01	YES	—	—	YES	YES	30302MAPA12FP	TB2904HQ	YES	—	YES	22K
KDC-MP433	M2	X34-4090-21	0.1	820P	2P	0.01	YES	—	—	YES	YES	30302MAPA12FP	TB2903HQ	YES	—	YES	22K
KDC-3034A/AY	E2/E4	X34-4332-75	0.047	220P	2P	820P	—	YES	YES	—	YES	30302MAPA27FP	TB2904HQ	—	YES	YES	22K
KDC-3034G/GY	E3/E5	X34-4332-76	0.047	220P	2P	820P	—	YES	YES	—	YES	30302MAPA27FP	TB2904HQ	—	YES	YES	22K
KDC-W4034A	E	X34-4332-70	0.047	220P	2P	820P	—	YES	YES	—	YES	30302MAPA26FP	TB2904HQ	—	YES	YES	22K
KDC-W4034AY	E2	X34-4332-77	0.047	220P	2P	820P	—	YES	YES	—	YES	30302MAPA26FP	KKZ09Z	—	YES	YES	22K
KDC-W4034G	E1	X34-4332-71	0.047	220P	2P	820P	—	YES	YES	—	YES	30302MAPA26FP	TB2904HQ	—	YES	YES	22K
KDC-W4034GY	E3	X34-4332-78	0.047	220P	2P	820P	—	YES	YES	—	YES	30302MAPA26FP	KKZ09Z	—	YES	YES	22K
KDC-W410A	E4	X34-4332-70	0.047	220P	2P	820P	—	YES	YES	—	YES	30302MAPA26FP	TB2904HQ	—	YES	YES	22K
KDC-W410AY	E6	X34-4332-77	0.047	220P	2P	820P	—	YES	YES	—	YES	30302MAPA26FP	KKZ09Z	—	YES	YES	22K
KDC-W410G	E5	X34-4332-71	0.047	220P	2P	820P	—	YES	YES	—	YES	30302MAPA26FP	TB2904HQ	—	YES	YES	22K
KDC-W410GY	E7	X34-4332-78	0.047	220P	2P	820P	—	YES	YES	—	YES	30302MAPA26FP	KKZ09Z	—	YES	YES	22K
KDC-W40GY	E9	X34-4332-74	0.047	820P	2P	0.01	YES	—	—	—	YES	30302MAPA26FP	TB2904HQ	—	—	YES	22K
KDC-W434A	E6	X34-4332-73	0.047	820P	2P	0.01	YES	—	—	—	YES	30302MAPA26FP	TB2904HQ	—	—	YES	22K
KDC-W434G	E7	X34-4332-74	0.047	820P	2P	0.01	YES	—	—	—	YES	30302MAPA26FP	TB2904HQ	—	—	YES	22K
KDC-W434GY	E8	X34-4332-72	0.047	820P	2P	0.01	YES	—	—	—	YES	30302MAPA26FP	KKZ09Z	—	—	YES	22K
KDC-W40AY	E7	X34-4332-73	0.047	820P	2P	0.01	YES	—	—	—	YES	30302MAPA26FP	TB2904HQ	—	—	YES	22K
KDC-W3534A	E8	X34-4332-79	0.047	220P	2P	820P	—	YES	—	—	YES	30302MAPA26FP	TB2904HQ	—	YES	YES	22K
KDC-W3534G	E9	X34-4333-71	0.047	220P	2P	820P	—	YES	—	—	YES	30302MAPA26FP	TB2904HQ	—	YES	YES	22K

MODEL	DESTI-NATION	UNIT No.	R105	R206	R207	R208	R209	R210	R211	R216, 224	R225	R305,306, 529,979	R410	R525	R608	R954	R960
E212/S	J/J1	X34-4090-02	100K	—	YES	—	YES	—	YES	—	YES	YES	—	820	7.5K	YES	—
E313S	J2	X34-4090-01	100K	—	YES	YES	—	YES	—	—	YES	YES	—	820	7.5K	YES	—
KDC-MP202	K1	X34-4090-11	47K	YES	—	YES	—	YES	—	—	YES	—	YES	820	10K	—	—
KDC-MP2032CR	K2	X34-4090-13	47K	YES	—	YES	—	—	YES	—	YES	—	YES	820	10K	—	—
KDC-MP333/RC	M1/M3	X34-4090-20	47K	—	YES	YES	—	—	YES	—	YES	—	YES	820	10K	—	YES
KDC-MP433	M2	X34-4090-21	47K	—	YES	YES	—	—	YES	—	YES	—	YES	820	7.5K	—	YES
KDC-3034A/AY	E2/E4	X34-4332-75	47K	YES	—	—	YES	YES	—	YES	—	—	YES	330	10K	YES	—
KDC-3034G/GY	E3/E5	X34-4332-76	47K	YES	—	—	YES	—	YES	YES	—	—	YES	330	10K	YES	—
KDC-W4034A	E	X34-4332-70	47K	YES	—	—	YES	YES	—	YES	—	—	YES	330	10K	YES	—
KDC-W4034AY	E2	X34-4332-77	47K	YES	—	—	YES	YES	—	YES	—	—	YES	330	10K	YES	—
KDC-W4034G	E1	X34-4332-71	47K	YES	—	—	YES	—	YES	YES	—	—	YES	330	10K	YES	—
KDC-W4034GY	E3	X34-4332-78	47K	YES	—	—	YES	—	YES	YES	—	—	YES	330	10K	YES	—
KDC-W410A	E4	X34-4332-70	47K	YES	—	—	YES	YES	—	YES	—	—	YES	330	10K	YES	—
KDC-W410AY	E6	X34-4332-77	47K	YES	—	—	YES	YES	—	YES	—	—	YES	330	10K	YES	—
KDC-W410G	E5	X34-4332-71	47K	YES	—	—	YES	—	YES	YES	—	—	YES	330	10K	YES	—
KDC-W410GY	E7	X34-4332-78	47K	YES	—	—	YES	—	YES	YES	—	—	YES	330	10K	YES	—
KDC-W40GY	E9	X34-4332-74	47K	—	YES	—	YES	—	YES	—	YES	—	—	330	10K	YES	—
KDC-W434A	E6	X34-4332-73	47K	—	YES	—	YES	YES	—	—	YES	—	—	330	10K	YES	—
KDC-W434G	E7	X34-4332-74	47K	—	YES	—	YES	—	YES	—	YES	—	—	330	10K	YES	—
KDC-W434GY	E8	X34-4332-72	47K	—	YES	—	YES	—	YES	—	YES	—	—	330	10K	YES	—
KDC-W40AY	E7	X34-4332-73	47K	—	YES	—	YES	YES	—	—	YES	—	—	330	10K	YES	—
KDC-W3534A	E8	X34-4332-79	47K	YES	—	—	YES	YES	—	YES	—	—	—	330	10K	YES	—
KDC-W3534G	E9	X34-4333-71	47K	YES	—	—	YES	—	YES	YES	—	—	—	330	10K	YES	—

IC1 : ∗
IC3 : BD4912-V4
IC7 : E-TDA7479AD
IC8 : S-80836CNNB-J
IC10 : E-TDA7513T
IC11 : M24C04-WDW6TP
IC14 : ∗

Q1,4,5 : UMC2N
Q2,6 : 2SB1565
Q3,103 : 2SC4081
Q7,51,101,802,901 : 2SC4155A(Q,R,S
Q8,902,903 : 2SA1603A
Q9 : RT1N241M
Q104,105 : RT1N441M
Q301 : RT1N144M
Q401 : RT1P144M
Q501 : HN3G01J(BL)-F
Q502 : 3SK126-F
Q503 : UMG4N
Q701 : RT1P241M
Q702,703 : RT1N430M

D1 : S2V60∗A
D2 : MTZJ8.2B
D3,103 : 1SR139-400T64
D4,5,55,110-112,510,610 : 1SS133
D6 : MTZJ12B
D52,106,107,508,509 : MTZJ6.8B
D101,102,104 : 1SR154-400
D105,901 : MTZJ4.7B
D301 : B30-1567-05
D401 : MTZJ6.2B
D501 : IMSA-6802-E
D502,503 : RN739F
D504-506 : KV1720STL-G

2SB1565

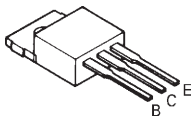

2SA1576A

2SC4081

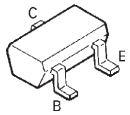

UMC2N

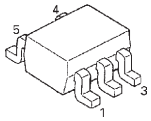

DAP202U
DA204U

3SK126-F

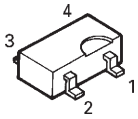

NJM4580V-ZB

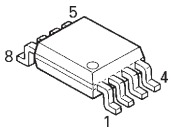

CAUTION : For continued safety, replace safety critical components only with manufacturer's recommended parts (refer to parts list).
⚠ Indicates safety critical components. To reduce the risk of electric shock, leakage-current or resistance measurements shall be carried out (exposed parts are acceptably insulated from the supply circuit) before the appliance is returned to the customer.

- DC voltages are as measured with a high impedance voltmeter. Values may vary slightly due to variations between individual instruments or/and units.

KDC-W3534A/W3534G
KDC-W40AY

ANODE CONNECTION

PIN NAME	3GA,3GB	2G	1GA,1GB
P1	—	col (Downside)	S1
P2	2d	2d	2d
P3	1d	1d	1d
P4	2n	2n	2n
P5	1n	1n	1n
P6	2p	2p	2p
P7	1p	1p	1p
P8	2r	2r	2r
P9	1r	1r	1r
P10	2e	2e	2e
P11	1e	1e	1e
P12	2c	2c	2c
P13	1c	1c	1c
P14	2g	2g	2g
P15	1g	1g	1g
P16	2m	2m	2m
P17	1m	1m	1m
P18	2f	2f	2f
P19	1f	1f	1f
P20	2a	2a	2a
P21	1a	1a	1a
P22	2h	2h	2h
P23	1h	1h	1h
P24	2j	2j	2j
P25	1j	1j	1j
P26	2k	2k	2k
P27	1k	1k	1k
P28	2b	2b	2b
P29	1b	1b	1b
P30	CT/RDS	col (Upside)	S2
P31	LOUD	—	S3
P32	ATT	—	S4
P33	TI	—	S5
P34	—	—	S6
P35	col	Dp	S7
P36	3d	3d	S8
P37	3n	3n	S9
P38	3p	3p	S10
P39	3r	3r	PTY
P40	3e	3e	IN
P41	3c	3c	ST
P42	3g	3g	ch
P43	3m	3m	d
P44	3f	3f	e
P45	3b	3b	c
P46	3k	3k	g
P47	3j	3j	f
P48	3h	3h	b
P49	3a	3a	a

SWITCH UNIT (X16-350x-xx)

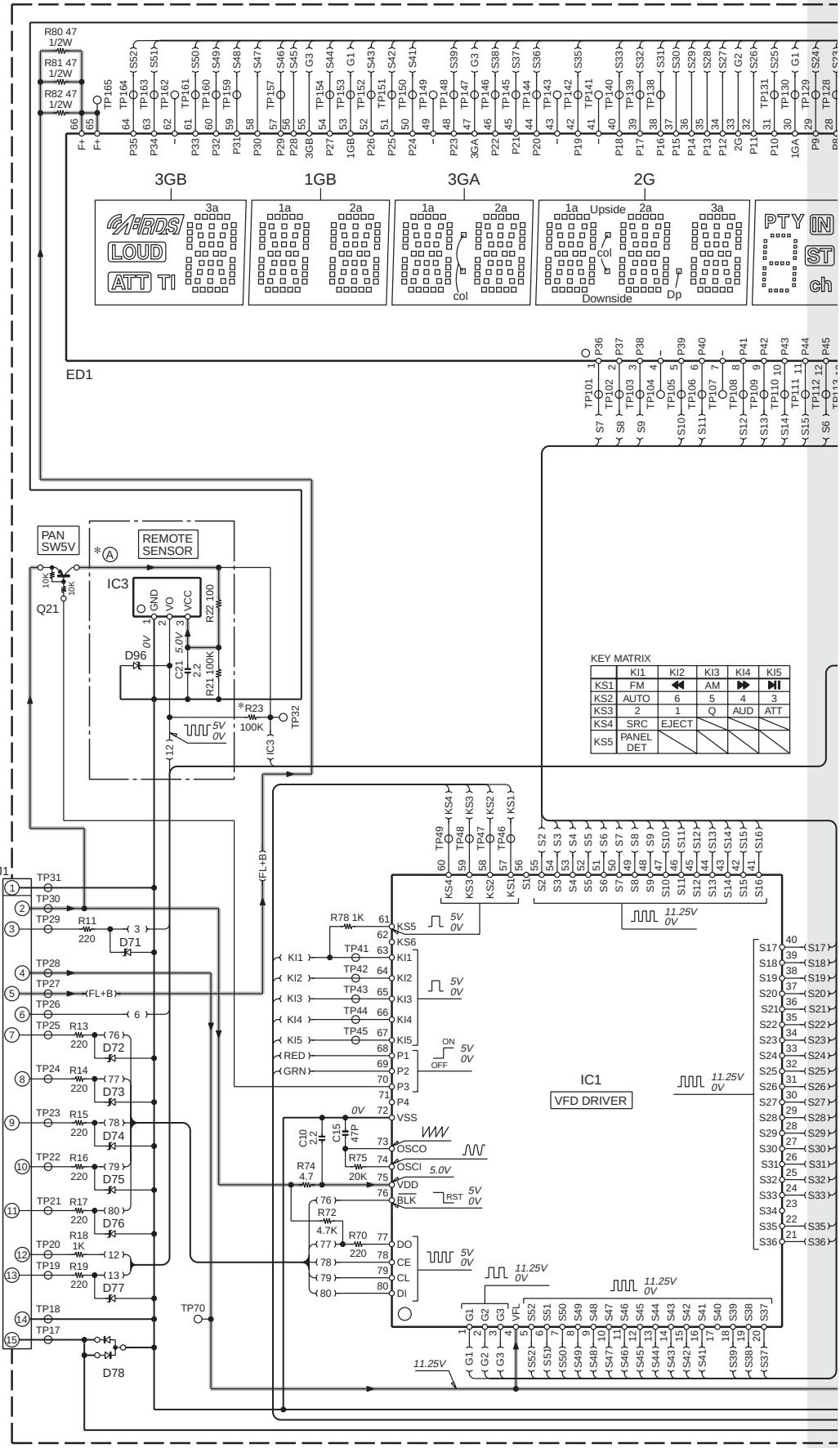

KDC-W3534A/W3534G
KDC-W40AY

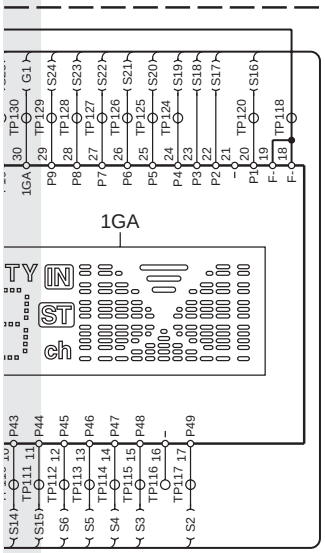

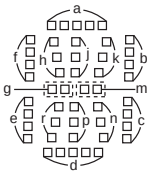

(3GB/1GB/3GA/2G)

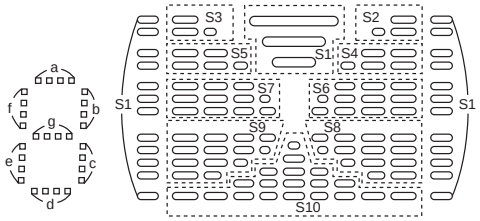

(1GA)

(X16-350x-xx)

MODEL NAME	DESTI-NATION	UNIT No.	Ⓐ	Ⓑ	Ⓒ	C61,62, 67,68	D61,62	D63-65	D97,98	Q1,2	R1,2	R23	R61	R62	R63	W1	W2	W3
E212/S	J/J1	0-01	—	—	B30-1575-05	YES	B30-1729-05	—	B30-1729-05	—	—	YES	300	680	470	YES	—	YES
E313S	J2																	
KDC-232MR	K2	0-11	—	YES	—	YES	B30-1729-05	—	B30-1729-05	—	—	YES	300	680	470	—	YES	YES
KDC-MP202	K1	2-72	—	YES	—	—	B30-1567-05	—	B30-1567-05	—	—	YES	680	820	680	—	YES	YES
KDC-MP2032	K	0-10	YES	YES	—	YES	B30-1729-05	—	B30-1729-05	—	—	—	300	680	470	—	YES	YES
KDC-MP2032CR	K2	0-21	YES	—	B30-1533-05	—	B30-1533-05	YES	—	—	—	—	620	620	680	YES	—	—
KDC-MP232	K1	0-10	YES	YES	—	YES	B30-1729-05	—	B30-1729-05	—	—	—	300	680	470	—	YES	YES
KDC-MP333/RC	M1/M3	0-21	YES	—	B30-1533-05	—	B30-1533-05	YES	—	—	—	—	620	620	680	YES	—	—
KDC-MP4033/S	M1/M2	0-22	YES	—	B30-1533-05	YES	B30-1729-05	—	B30-1729-05	—	—	—	300	680	470	YES	—	YES
KDC-MP433	M2	0-21	YES	—	B30-1533-05	—	B30-1533-05	YES	—	—	—	—	620	620	680	YES	—	—
KDC-MP4533	M3	0-22	YES	—	B30-1533-05	YES	B30-1729-05	—	B30-1729-05	—	—	—	300	680	470	YES	—	YES
KDC-3034A/AY	E2/E4	2-72	—	YES	—	—	B30-1567-05	—	B30-1567-05	—	—	YES	680	820	680	—	YES	YES
KDC-3034G/GY	E3/E5	2-73	—	—	B30-1533-05	—	B30-1533-05	YES	—	—	—	YES	620	620	680	YES	—	—
KDC-W40GY	E9	2-73	—	—	B30-1533-05	—	B30-1533-05	YES	—	—	—	YES	620	620	680	YES	—	—
KDC-W4034A/AY	E/E2	2-72	—	YES	—	—	B30-1567-05	—	B30-1567-05	—	—	YES	680	820	680	—	YES	YES
KDC-W4034G/GY	E1/E3	2-73	—	—	B30-1533-05	—	B30-1533-05	YES	—	—	—	YES	620	620	680	YES	—	—
KDC-W410A/AY	E4/E6	2-72	—	YES	—	—	B30-1567-05	—	B30-1567-05	—	—	YES	680	820	680	—	YES	YES
KDC-W410G/GY	E5/E7	2-73	—	—	B30-1533-05	—	B30-1533-05	YES	—	—	—	YES	620	620	680	YES	—	—
KDC-W434A	E6	2-72	—	YES	—	—	B30-1567-05	—	B30-1567-05	—	—	YES	680	820	680	—	YES	YES
KDC-W434G/GY	E7/E8	2-73	—	—	B30-1533-05	—	B30-1533-05	YES	—	—	—	YES	620	620	680	YES	—	—
KDC-W4534/Y	E1/E2	2-71	—	YES	B30-1533-05	YES	B30-1729-05	—	B30-1729-05	YES	YES	YES	300	680	470	—	—	YES
KDC-W40AY	E7	2-72	—	YES	—	—	B30-1567-05	—	B30-1567-05	—	—	YES	680	820	680	—	YES	YES
KDC-W3534A	E8	2-72	—	YES	—	—	B30-1567-05	—	B30-1567-05	—	—	YES	680	820	680	—	YES	YES
KDC-W3534G	E9	2-73	—	—	B30-1533-05	—	B30-1533-05	YES	—	—	—	YES	620	620	680	YES	—	—

ED1 : HNR-03SS09T
IC1 : LC75756W
IC3 : PNA4S22M02KW
Q1,2 : 2SC5383(E,F)
Q21 : RT1P141U

D31-33,37-39,43-45,49-51,70 : B30-1567-05
D34-36,40-42,46-48,52-54 : ＊
D61-65 : ＊
D71-77 : UDZS5.6B
D78 : DA204U
D96 : UDZS5.6B
D97,98 : ＊

GND LINE
+B LINE

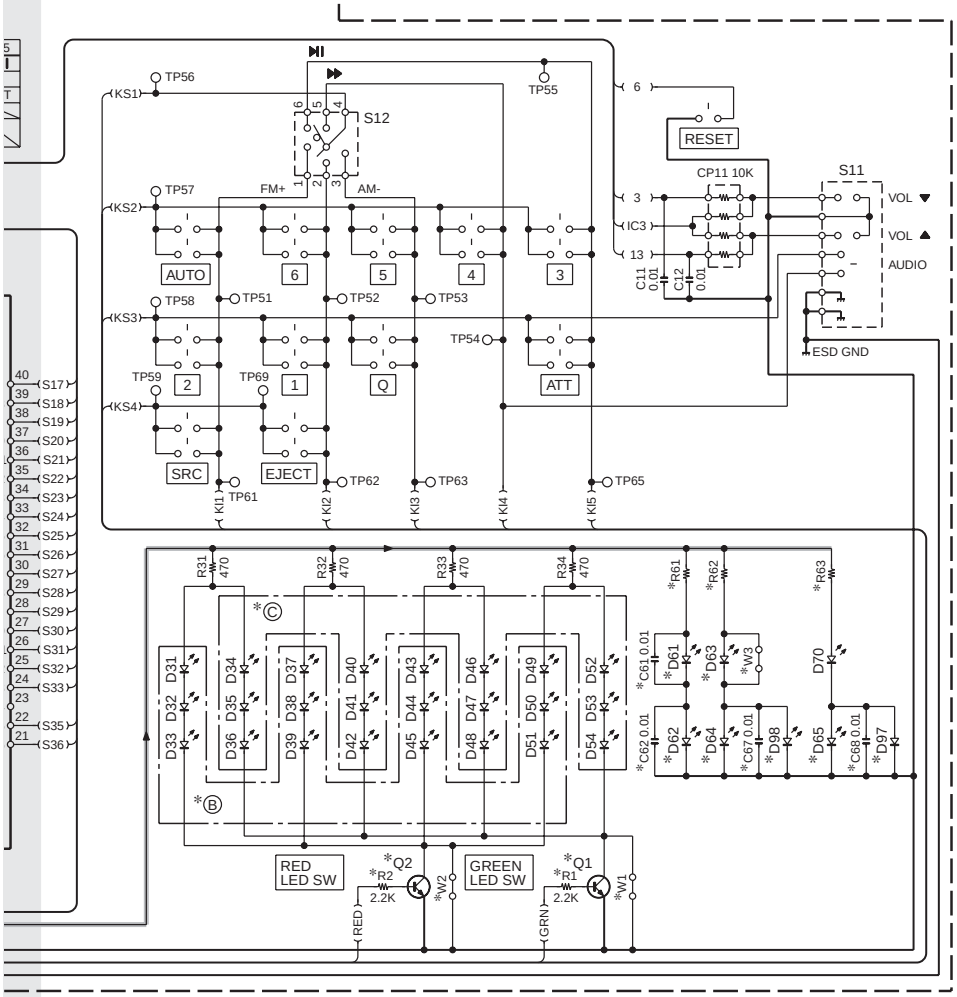

CAUTION : For continued safety, replace safety critical components only with manufacturer's recommended parts (refer to parts list).
⚠ Indicates safety critical components. To reduce the risk of electric shock, leakage-current or resistance measurements shall be carried out (exposed parts are acceptably insulated from the supply circuit) before the appliance is returned to the customer.

- DC voltages are as measured with a high impedance voltmeter. Values may vary slightly due to variations between individual instruments or/and units.

KDC-W3534A/W3534G/W40AY (2/2)

KDC-W3534A/W3534G
KDC-W40AY

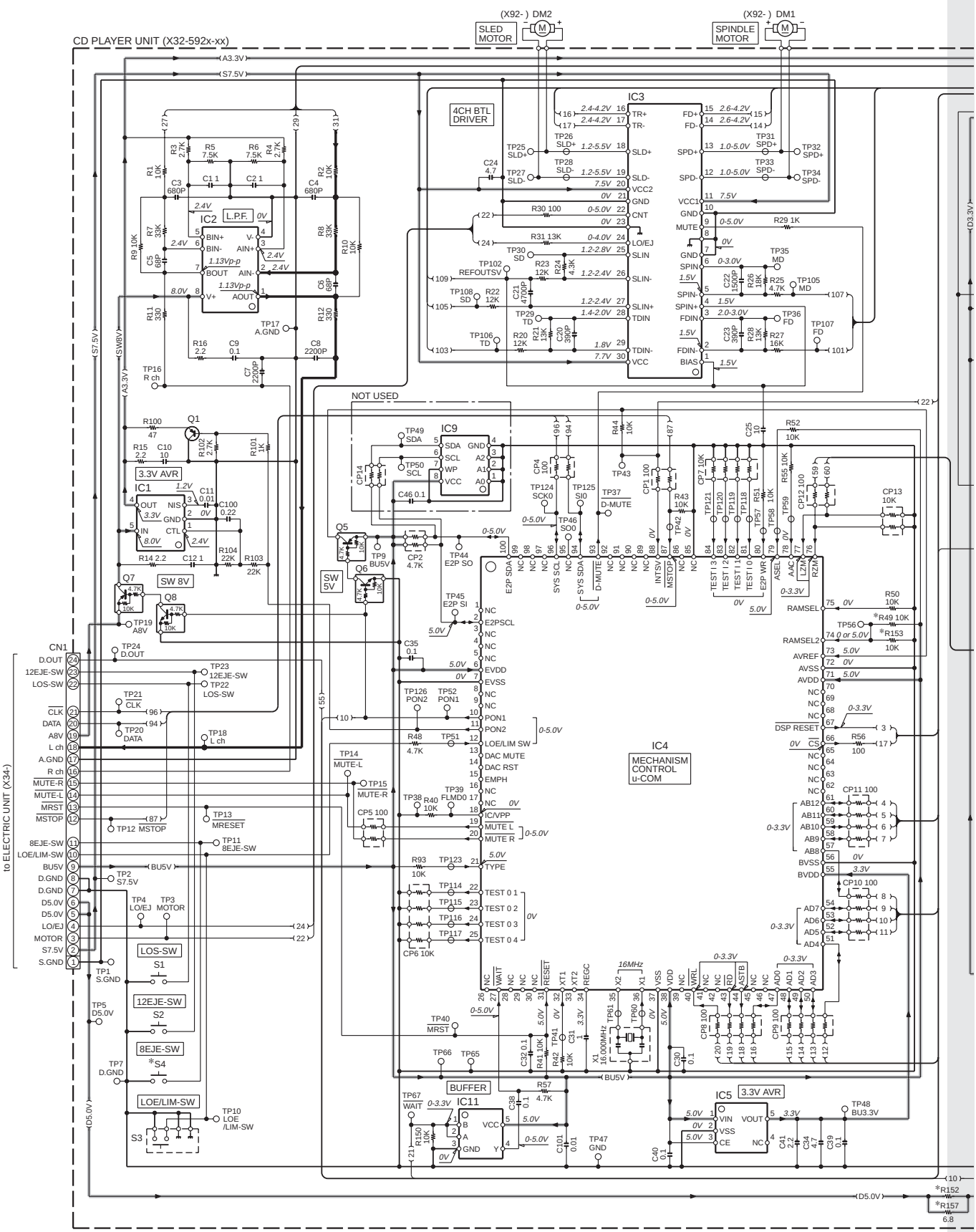

CAUTION : For continued safety, replace safety critical components only with manufacturer's recommended parts (refer to parts list). ⚠ Indicates safety critical components. To reduce the risk of electric shock, leakage-current or resistance measurements shall be carried out (exposed parts are acceptably insulated from the supply circuit) before the appliance is returned to the customer.

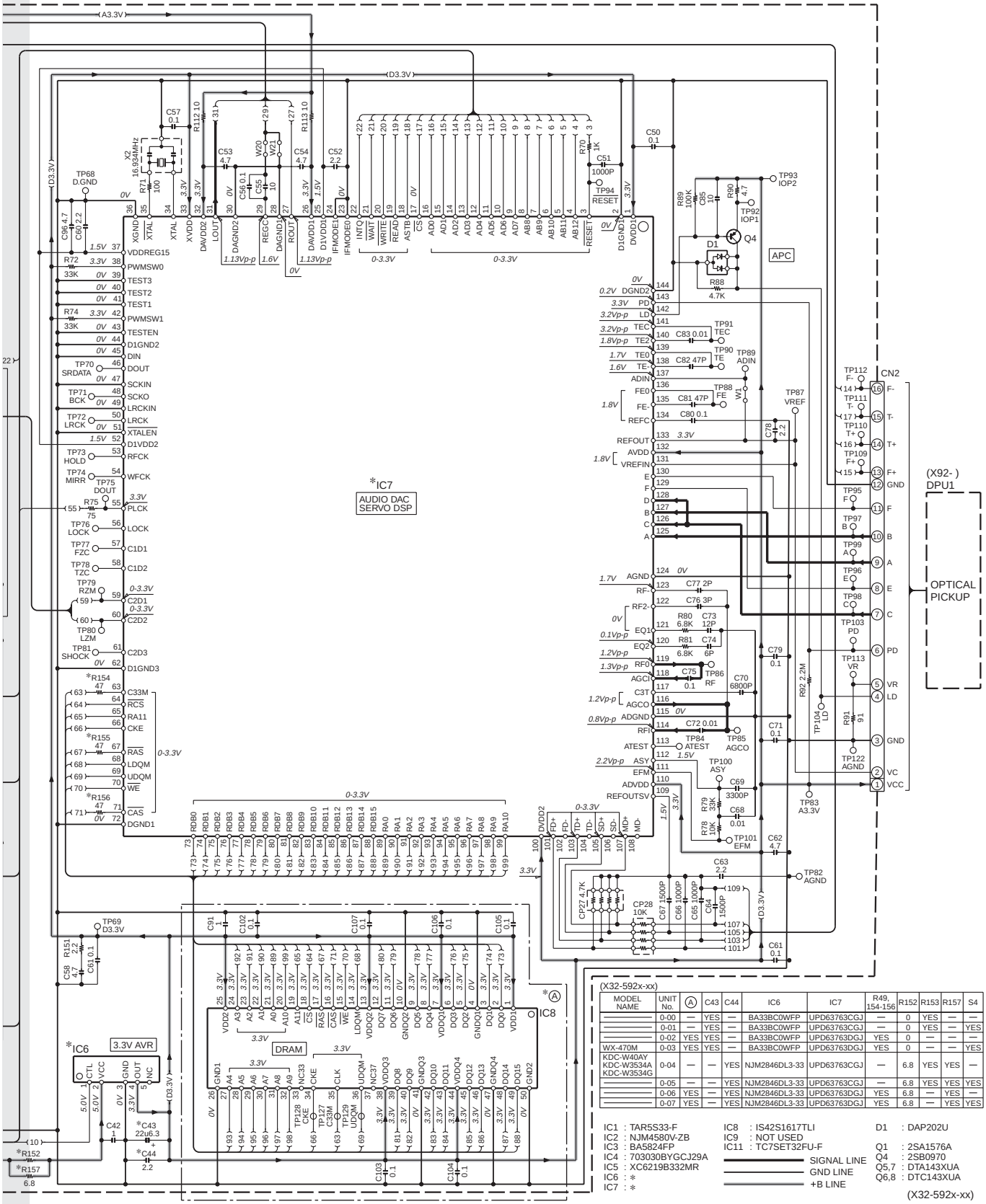

(X32-592x-xx) MODEL NAME	UNIT No.	Ⓐ	C43	C44	IC6	IC7	R49, 154-156	R152	R153	R157	S4
———	0-00	—	YES	—	BA33BC0WFP	UPD63763CGJ	—	0	YES	—	—
———	0-01	—	YES	—	BA33BC0WFP	UPD63763CGJ	—	0	YES	—	YES
———	0-02	YES	YES	—	BA33BC0WFP	UPD63763DGJ	YES	0	—	—	—
WX-470M	0-03	YES	YES	—	BA33BC0WFP	UPD63763DGJ	YES	0	—	—	YES
KDC-W40AY KDC-W3534A KDC-W3534G	0-04	—	—	YES	NJM2846DL3-33	UPD63763CGJ	—	6.8	YES	YES	—
———	0-05	—	—	YES	NJM2846DL3-33	UPD63763CGJ	—	6.8	YES	YES	YES
———	0-06	YES	—	YES	NJM2846DL3-33	UPD63763DGJ	YES	6.8	—	YES	—
———	0-07	YES	—	YES	NJM2846DL3-33	UPD63763DGJ	YES	6.8	—	YES	YES

IC1 : TAR5S33-F
IC2 : NJM4580V-ZB
IC3 : BA5824FP
IC4 : 703030BYGCJ29A
IC5 : XC6219B332MR
IC6 : *
IC7 : *
IC8 : IS42S1617TLI
IC9 : NOT USED
IC11 : TC7SET32FU-F

SIGNAL LINE
GND LINE
+B LINE

D1 : DAP202U
Q1 : 2SA1576A
Q4 : 2SB0970
Q5,7 : DTA143XUA
Q6,8 : DTC143XUA

(X32-592x-xx)

- DC voltages are as measured with a high impedance voltmeter. Values may vary slightly due to variations between individual instruments or/and units.

EXPLODED VIEW (CD MECHANISM)

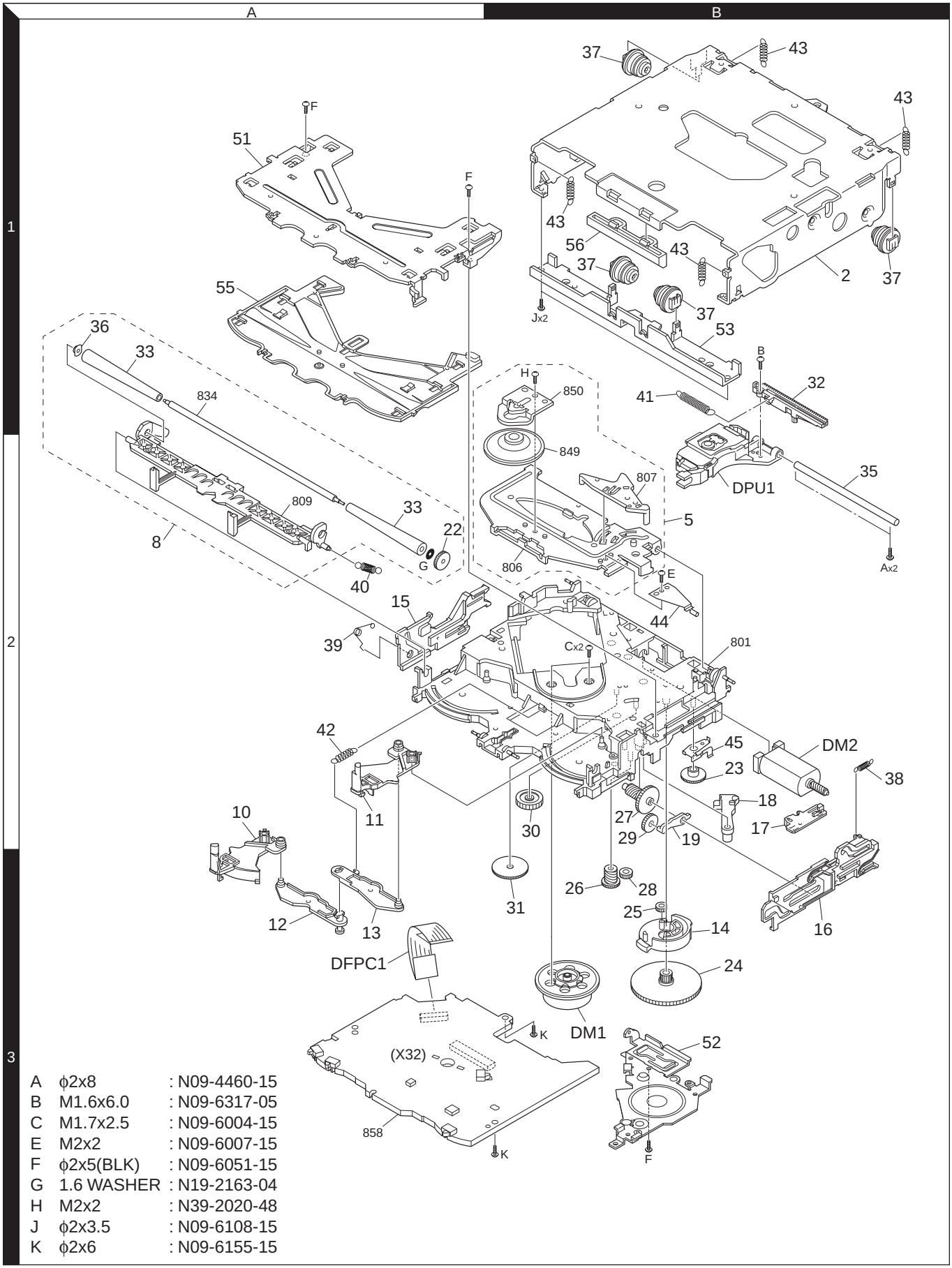

A	ϕ2x8	: N09-4460-15
B	M1.6x6.0	: N09-6317-05
C	M1.7x2.5	: N09-6004-15
E	M2x2	: N09-6007-15
F	ϕ2x5(BLK)	: N09-6051-15
G	1.6 WASHER	: N19-2163-04
H	M2x2	: N39-2020-48
J	ϕ2x3.5	: N09-6108-15
K	ϕ2x6	: N09-6155-15

Parts with the exploded numbers larger than 700 are not supplied.

EXPLODED VIEW (UNIT)

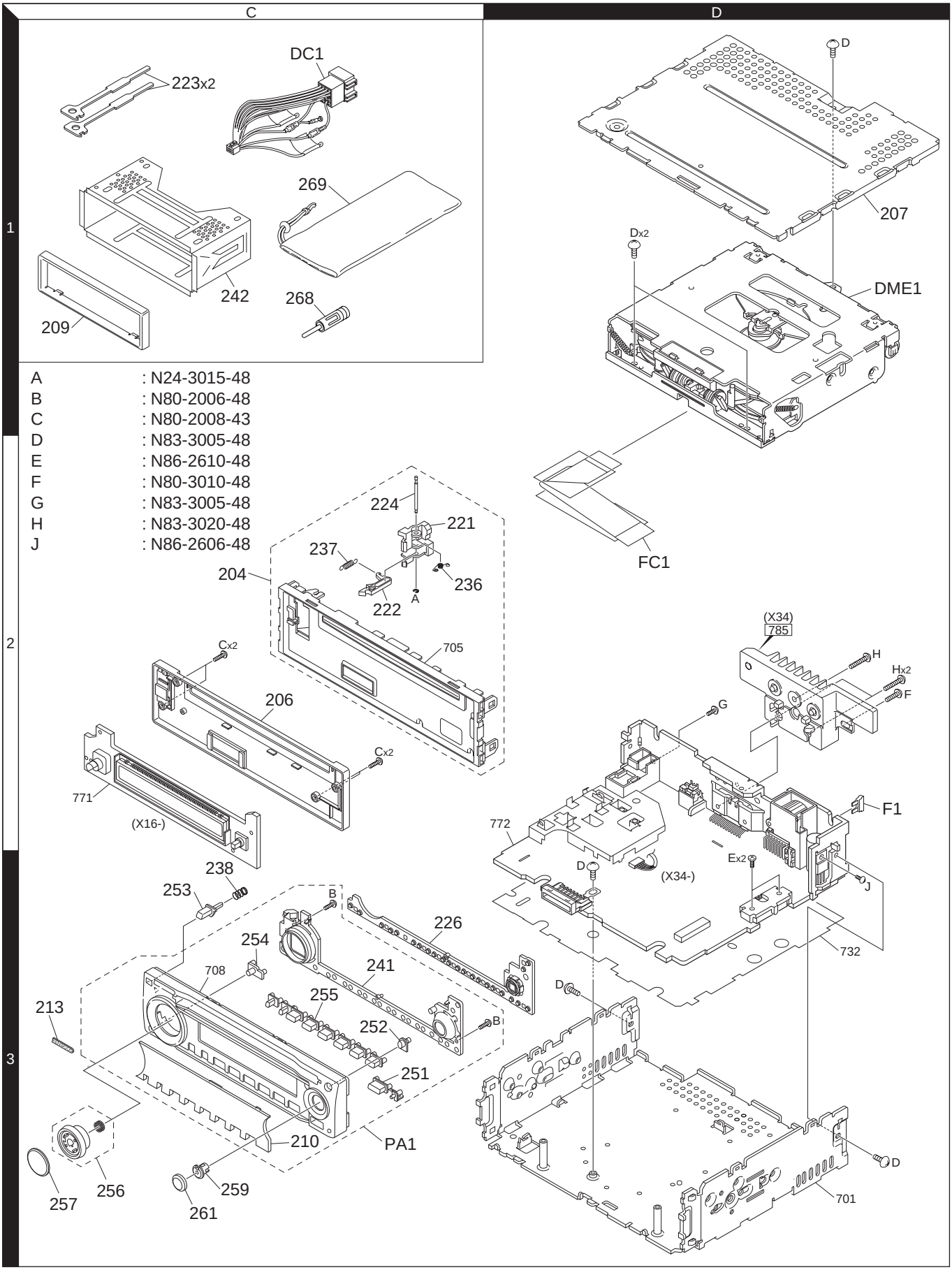

A : N24-3015-48
B : N80-2006-48
C : N80-2008-43
D : N83-3005-48
E : N86-2610-48
F : N80-3010-48
G : N83-3005-48
H : N83-3020-48
J : N86-2606-48

Parts with the exploded numbers larger than 700 are not supplied.

PARTS LIST

✻ New parts
Parts without **Parts No.** are not supplied.
Les articles non mentionnes dans le **Parts No.** ne sont pas fournis.
Teile ohne **Parts No.** werden nicht geliefert.

Ref. No.	Add	New	Parts No.	Description	Destination
KDC-W3534A/W3534G/W40AY					
204	2C		A22-2863-13	SUB PANEL ASSY	
206	2C		A46-1815-01	REAR COVER	
207	1D		A52-0804-12	TOP PLATE	
PA1	3C	✻	A64-3806-22	PANEL ASSY	E7
PA1	3C	✻	A64-3957-12	PANEL ASSY	E8E9
-			B46-0681-04	ID CARD	
-			B46-0682-00	WARRANTY CARD	E8E9
-		✻	B64-3294-10	INST. MANUAL (ENGLISH)	E7
-		✻	B64-3297-10	INST. MANUAL (RUSSIAN)	E7
-		✻	B64-3453-00	INST. MANUAL (ENGLISH)	E8E9
-		✻	B64-3454-00	INST. MANUAL (FRE.GER.DUT)	E8E9
-		✻	B64-3455-00	INST. MANUAL (ITA.SPA.POR)	E8E9
209	1C		B07-3122-01	ESCUTCHEON	
210	3C		B10-4805-01	FRONT GLASS	E7
210	3C	✻	B10-4848-01	FRONT GLASS	E8E9
213	3C		B43-1518-04	BADGE	
221	2C		D10-4446-03	LEVER	
222	2C		D10-4447-03	LEVER	
223	1C		D10-4589-04	LEVER	
224	2C		D21-2329-04	SHAFT	
226	3C		E29-2070-02	CONDUCTIVE RUBBER	
⚠ DC1	1C		E30-6427-05	DC CORD	
FC1	2D		E39-0736-05	FLAT CABLE (24-PIN)	
⚠ F1	2D		F52-0023-05	FUSE (MINI BLADE TYPE) (10A)	
236	2C		G01-2987-04	TORSION COIL SPRING	
237	2C		G01-3096-04	EXTENSION SPRING	
238	3C		G01-3244-04	COMPRESSION SPRING (REL)	
-			H10-4919-12	POLYSTYRENE FOAMED FIXTURE	
-		✻	H21-1176-24	PROTECTION SHEET	
-			H25-0329-04	PROTECTION BAG (280X450X0.03)	E7
-			H25-0337-04	PROTECTION BAG (180X300X0.03)	
-			H25-1111-04	PROTECTION BAG (280X450X0.03)	E8E9
-		✻	H54-3797-03	ITEM CARTON CASE	E7
-		✻	H54-3798-03	ITEM CARTON CASE	E8
-		✻	H54-3799-03	ITEM CARTON CASE	E9
241	3C		J19-7115-01	HOLDER	
242	1C		J21-9716-03	MOUNTING HARDWARE ASSY	
251	3C		K25-1788-03	PUSH KNOB (SRC)	
252	3C		K24-4457-04	PUSH KNOB (EJECT)	
253	3C		K24-4459-04	PUSH KNOB (RELEASE)	
254	3C		K24-4455-04	PUSH KNOB (ATT)	
255	3C		K25-1790-02	PUSH KNOB (PRESET)	
256	3C		K28-0167-03	KNOB ASSY (VOL)	
257	3C		K28-0104-13	KEY TOP (VOL)	
259	3C		K28-0102-03	KNOB BASE (FM/AM)	
261	3C		K28-0107-13	KEY TOP (FM/AM)	
A	2C		N24-3015-48	E TYPE RETAINING RING	
B	3C		N80-2006-48	PAN HEAD TAPTITE SCREW	
C	2C		N80-2008-43	PAN HEAD TAPTITE SCREW	
D	1D		N83-3005-48	PAN HEAD TAPTITE SCREW	

Ref. No.	Add	New	Parts No.	Description	Destination
E	3D		N86-2610-48	BINDING HEAD TAPTITE SCREW	
268	1C		T90-0523-05	ANTENNA ADAPTOR	
269	1C		W01-1661-05	CARRYING CASE	
DME1	1D	✻	X92-5690-00	MECHANISM ASSY (DXM-6B00W)	
SWITCH UNIT (X16-350x-xx)					
D31-33			B30-1567-05	LED (1608,RED)	E7E8
D34-36			B30-1533-05	LED (1608,PG)	E9
D37-39			B30-1567-05	LED (1608,RED)	E7E8
D40-42			B30-1533-05	LED (1608,PG)	E9
D43-45			B30-1567-05	LED (1608,RED)	E7E8
D46-48			B30-1533-05	LED (1608,PG)	E9
D49-51			B30-1567-05	LED (1608,RED)	E7E8
D52-54			B30-1533-05	LED (1608,PG)	E9
D61-65			B30-1533-05	LED (1608,PG)	E9
D61,62			B30-1567-05	LED (1608,RED)	E7E8
D70			B30-1567-05	LED (1608,RED)	
D97,98			B30-1567-05	LED (1608,RED)	E7E8
C10			CK73GB0J225K	CHIP C 2.2UF K	
C11,12			CK73GB1H103K	CHIP C 0.010UF K	
C15			CC73GCH1H470J	CHIP C 47PF J	
C16			CK73GB1H103K	CHIP C 0.010UF K	
J1			E59-0851-05	RECTANGULAR PLUG	
CP11			RK74HB1J103J	CHIP-COM 10K J 1/16W	
R11			RK73GB2A221J	CHIP R 220 J 1/10W	
R13-17			RK73GB2A221J	CHIP R 220 J 1/10W	
R18			RK73GB2A102J	CHIP R 1.0K J 1/10W	
R19			RK73GB2A221J	CHIP R 220 J 1/10W	
R23			RK73GB2A104J	CHIP R 100K J 1/10W	
R31-34			RK73FB2B471J	CHIP R 470 J 1/8W	
R61			RK73EB2E681J	CHIP R 680 J 1/4W	E7E8
R61,62			RK73EB2E621J	CHIP R 620 J 1/4W	E9
R62			RK73EB2E821J	CHIP R 820 J 1/4W	E7E8
R63			RK73EB2E681J	CHIP R 680 J 1/4W	
R70			RK73GB2A221J	CHIP R 220 J 1/10W	
R72			RK73GB2A472J	CHIP R 4.7K J 1/10W	
R74			RK73GB2A4R7J	CHIP R 4.7 J 1/10W	
R75			RK73GB2A203J	CHIP R 20K J 1/10W	
R78			RK73GB2A102J	CHIP R 1.0K J 1/10W	
R80-82			RK73PB2H470J	CHIP R 47 J 1/2W	
W1			R92-1252-05	CHIP R 0 OHM J 1/16W	E9
W2,3			R92-1252-05	CHIP R 0 OHM J 1/16W	E7E8
S12			S70-0106-05	TACT SWITCH	
S11			T99-0457-15	ROTARY ENCODER	
D71-77			UDZS5.6B	ZENER DIODE	
D78			DA204U	DIODE	
ED1			HNR-03SS09T	FLUORESCENT INDICATOR TUBE	
IC1			LC75756W	MOS-IC	
Q21			RT1P141U	TRANSISTOR	

E7 : KDC-W40AY **E8** : KDC-W3534A **E9** : KDC-W3534G
(**E** : Europe **K** : North America **M** : Other Areas **W** : Without Europe)

⚠ Indicates safety critical components.

PARTS LIST

Ref. No.	Add	New	Parts No.	Description			Destination
CD PLAYER UNIT (X32-5920-04)							
C1,2			CK73GB1A105K	CHIP C	1.0UF	K	
C3,4			CC73GCH1H681J	CHIP C	680PF	J	
C5,6			CC73GCH1H680J	CHIP C	68PF	J	
C7,8			CK73GB1H222K	CHIP C	2200PF	K	
C9			CK73GB1H104K	CHIP C	0.10UF	K	
C10			CK73FB0J106K	CHIP C	10UF	K	
C11			CK73GB1H103K	CHIP C	0.010UF	K	
C12			CK73GB1A105K	CHIP C	1.0UF	K	
C20			CC73GCH1H391J	CHIP C	390PF	J	
C21			CK73GB1H472K	CHIP C	4700PF	K	
C22			CK73GB1H152K	CHIP C	1500PF	K	
C23			CC73GCH1H391J	CHIP C	390PF	J	
C24			CK73EB1A475K	CHIP C	4.7UF	K	
C25			CK73FB0J106K	CHIP C	10UF	K	
C30			CK73GB1H104K	CHIP C	0.10UF	K	
C31			CK73GB1A105K	CHIP C	1.0UF	K	
C32			CK73GB1H104K	CHIP C	0.10UF	K	
C34			CK73FB0J475K	CHIP C	4.7UF	K	
C35			CK73GB1H104K	CHIP C	0.10UF	K	
C38-40			CK73GB1H104K	CHIP C	0.10UF	K	
C41			CK73GB0J225K	CHIP C	2.2UF	K	
C42			CK73GB1A105K	CHIP C	1.0UF	K	
C44			CK73GB0J225K	CHIP C	2.2UF	K	
C50			CK73GB1H104K	CHIP C	0.10UF	K	
C51			CK73GB1H102K	CHIP C	1000PF	K	
C52			CK73GB0J225K	CHIP C	2.2UF	K	
C53,54			CK73GB0J475K	CHIP C	4.7UF	K	
C55			CK73FB0J106K	CHIP C	10UF	K	
C56,57			CK73GB1H104K	CHIP C	0.10UF	K	
C58			CK73FB0J475K	CHIP C	4.7UF	K	
C60			CK73GB0J225K	CHIP C	2.2UF	K	
C61			CK73GB1H104K	CHIP C	0.10UF	K	
C62			CK73FB0J475K	CHIP C	4.7UF	K	
C63			CK73GB0J225K	CHIP C	2.2UF	K	
C64			CK73GB1H152K	CHIP C	1500PF	K	
C65,66			CK73GB1H102K	CHIP C	1000PF	K	
C67			CK73GB1H152K	CHIP C	1500PF	K	
C68			CK73GB1H103K	CHIP C	0.010UF	K	
C69			CK73GB1H332K	CHIP C	3300PF	K	
C70			CK73GB1H682K	CHIP C	6800PF	K	
C71			CK73GB1H104K	CHIP C	0.10UF	K	
C72			CK73GB1H103K	CHIP C	0.010UF	K	
C73			CC73GCH1H120J	CHIP C	12PF	J	
C74			CC73GCH1H060D	CHIP C	6.0PF	D	
C75			CK73GB1H104K	CHIP C	0.10UF	K	
C76			CC73GCH1H030C	CHIP C	3.0PF	C	
C77			CC73GCH1H020C	CHIP C	2.0PF	C	
C78			CK73GB0J225K	CHIP C	2.2UF	K	
C79,80			CK73GB1H104K	CHIP C	0.10UF	K	
C81,82			CC73GCH1H470J	CHIP C	47PF	J	
C83			CK73GB1H103K	CHIP C	0.010UF	K	
C85			CK73FB0J106K	CHIP C	10UF	K	
C96			CK73GB0J475K	CHIP C	4.7UF	K	

Ref. No.	Add	New	Parts No.	Description				Destination
C100			CK73GB1C224K	CHIP C	0.22UF	K		
C101			CK73GB1H103K	CHIP C	0.010UF	K		
CN1			E41-2083-15	FLAT CABLE CONNECTOR				
CN2			E41-2612-05	FLAT CABLE CONNECTOR				
X1			L78-0862-05	RESONATOR (16.00MHZ)				
X2			L78-1216-05	RESONATOR (16.93MHZ)				
CP1			RK74GA1J101J	CHIP-COM	100	J	1/16W	
CP2			RK74GA1J472J	CHIP-COM	4.7K	J	1/16W	
CP4,5			RK74GA1J101J	CHIP-COM	100	J	1/16W	
CP6,7			RK74HB1J103J	CHIP-COM	10K	J	1/16W	
CP8-11			RK74HB1J101J	CHIP-COM	100	J	1/16W	
CP12			RK74GA1J101J	CHIP-COM	100	J	1/16W	
CP13			RK74GA1J103J	CHIP-COM	10K	J	1/16W	
CP27			RK74GB1J472J	CHIP-COM	4.7K	J	1/16W	
CP28			RK74GB1J103J	CHIP-COM	10K	J	1/16W	
R1,2			RK73GH2A103D	CHIP R	10K	D	1/10W	
R3,4			RK73GB2A272J	CHIP R	2.7K	J	1/10W	
R5,6			RK73GB2A752J	CHIP R	7.5K	J	1/10W	
R7,8			RK73GB2A333J	CHIP R	33K	J	1/10W	
R9,10			RK73GH2A103D	CHIP R	10K	D	1/10W	
R11,12			RK73GB2A331J	CHIP R	330	J	1/10W	
R14-16			RK73GB2A2R2J	CHIP R	2.2	J	1/10W	
R20			RK73GB2A123J	CHIP R	12K	J	1/10W	
R21			RK73GB2A133J	CHIP R	13K	J	1/10W	
R22,23			RK73GB2A123J	CHIP R	12K	J	1/10W	
R24			RK73GB2A432J	CHIP R	4.3K	J	1/10W	
R25			RK73GB2A472J	CHIP R	4.7K	J	1/10W	
R26			RK73GB2A183J	CHIP R	18K	J	1/10W	
R27			RK73GB2A163J	CHIP R	16K	J	1/10W	
R28			RK73GB2A133J	CHIP R	13K	J	1/10W	
R29			RK73GB2A102J	CHIP R	1.0K	J	1/10W	
R30			RK73GB2A101J	CHIP R	100	J	1/10W	
R31			RK73GB2A133J	CHIP R	13K	J	1/10W	
R40-44			RK73GB2A103J	CHIP R	10K	J	1/10W	
R48			RK73GB2A472J	CHIP R	4.7K	J	1/10W	
R50-52			RK73GB2A103J	CHIP R	10K	J	1/10W	
R55			RK73GB2A103J	CHIP R	10K	J	1/10W	
R56			RK73GB2A101J	CHIP R	100	J	1/10W	
R57			RK73GB2A472J	CHIP R	4.7K	J	1/10W	
R70			RK73GB2A102J	CHIP R	1.0K	J	1/10W	
R71			RK73GB2A101J	CHIP R	100	J	1/10W	
R72			RK73GB2A333J	CHIP R	33K	J	1/10W	
R74			RK73GB2A333J	CHIP R	33K	J	1/10W	
R75			RK73GB2A750J	CHIP R	75	J	1/10W	
R78			RK73GB2A103J	CHIP R	10K	J	1/10W	
R79			RK73GB2A333J	CHIP R	33K	J	1/10W	
R80,81			RK73GB2A682J	CHIP R	6.8K	J	1/10W	
R88			RK73GB2A472J	CHIP R	4.7K	J	1/10W	
R89			RK73GB2A104J	CHIP R	100K	J	1/10W	
R90			RK73GB2A4R7J	CHIP R	4.7	J	1/10W	
R91			RK73GB2A910J	CHIP R	91	J	1/10W	
R92			RK73GB2A225J	CHIP R	2.2M	J	1/10W	
R93			RK73GB2A103J	CHIP R	10K	J	1/10W	

E7 : KDC-W40AY **E8** : KDC-W3534A **E9** : KDC-W3534G
(**E** : Europe **K** : North America **M** : Other Areas **W** : Without Europe)

⚠ Indicates safety critical components.

PARTS LIST

CD PLAYER UNIT (X32-5920-04)

Ref. No.	Add	New	Parts No.	Description				Destination
R100			RK73GB2A470J	CHIP R	47	J	1/10W	
R101			RK73GB2A102J	CHIP R	1.0K	J	1/10W	
R102			RK73GB2A272J	CHIP R	2.7K	J	1/10W	
R103,104			RK73GB2A223J	CHIP R	22K	J	1/10W	
R112,113			RK73GB2A100J	CHIP R	10	J	1/10W	
R150			RK73GB2A103J	CHIP R	10K	J	1/10W	
R151			RK73GB2A2R2J	CHIP R	2.2	J	1/10W	
R152		✻	RK73FB2B6R8J	CHIP R	6.8	J	1/8W	
R153			RK73GB2A103J	CHIP R	10K	J	1/10W	
R157		✻	RK73FB2B6R8J	CHIP R	6.8	J	1/8W	
W1			R92-1252-05	CHIP R	0 OHM	J	1/16W	
W20,21			R92-1252-05	CHIP R	0 OHM	J	1/16W	
S1,2			S68-0863-05	PUSH SWITCH				
S3			S68-0862-05	PUSH SWITCH				
D1			DAP202U	DIODE				
IC1			TAR5S33-F	ANALOGUE IC				
IC2			NJM4580V-ZB	ANALOGUE IC				
IC3			BA5824FP	ANALOGUE IC				
IC4			703030BYGCJ29A	MICROCONTROLLER IC				
IC5			XC6219B332MR	ANALOGUE IC				
IC6		✻	NJM2846DL3-33	ANALOGUE IC				
IC7			UPD63763CGJ	MOS-IC				
IC11			TC7SET32FU-F	MOS-IC				
Q1			2SA1576A	TRANSISTOR				
Q4			2SB0970	TRANSISTOR				
Q5			DTA143XUA	DIGITAL TRANSISTOR				
Q6			DTC143XUA	DIGITAL TRANSISTOR				
Q7			DTA143XUA	DIGITAL TRANSISTOR				
Q8			DTC143XUA	DIGITAL TRANSISTOR				

ELECTRIC UNIT (X34-433x-xx)

Ref. No.	Add	New	Parts No.	Description				Destination
C1			C90-5683-05	ELECTRO	3300UF	16WV		
C2			CD04AB1C220M	ELECTRO	22UF	16WV		
C4			CK73GB1H104K	CHIP C	0.10UF	K		
C6			CK73GB1H104K	CHIP C	0.10UF	K		
C7			CK73GB1A105K	CHIP C	1.0UF	K		
C8			CK73FB1A225K	CHIP C	2.2UF	K		
C9			CK73GB1H104K	CHIP C	0.10UF	K		
C10			CD04AB0J101M	ELECTRO	100UF	6.3WV		
C11,12			CD04AT1E101M	ELECTRO	100UF	25WV		
C97			CD04AB1C220M	ELECTRO	22UF	16WV		
C101,102			CK73GB1H103K	CHIP C	0.010UF	K		E7
C102			CK73GB1H103K	CHIP C	0.010UF	K		E8E9
C201			CC73GCH1H180J	CHIP C	18PF	J		
C202			CC73GCH1H220J	CHIP C	22PF	J		
C203			CK73GB1H104K	CHIP C	0.10UF	K		
C204			CK73GB1H102K	CHIP C	1000PF	K		
C301,302			CD04AB1HR47M	ELECTRO	0.47UF	50WV		
C410			CK73GB1A105K	CHIP C	1.0UF	K		
C501			CC73GCH1H100D	CHIP C	10PF	D		
C502			CK73GB1H152K	CHIP C	1500PF	K		
C503			CK73GB1H104K	CHIP C	0.10UF	K		
C504			CK73GB1H103K	CHIP C	0.010UF	K		
C505			CD04AC1V4R7M	ELECTRO	4.7UF	35WV		
C506			CK73GB1H104K	CHIP C	0.10UF	K		
C507			CD04AC1A330M	ELECTRO	33UF	10WV		
C508			CD04AC1C220M	ELECTRO	22UF	16WV		
C509			CC73GCH1H680J	CHIP C	68PF	J		
C510			CC73GCH1H101J	CHIP C	100PF	J		
C511			CK73GB1H103K	CHIP C	0.010UF	K		
C512			CD04AC1V4R7M	ELECTRO	4.7UF	35WV		
C513,514			CK73GB1H103K	CHIP C	0.010UF	K		
C515			CK73FB1C105K	CHIP C	1.0UF	K		
C521			CK73GB1H104K	CHIP C	0.10UF	K		
C522			CC73GCH1H330J	CHIP C	33PF	J		
C523			CC73GCH1H270J	CHIP C	27PF	J		
C524			CC73GCH1H101J	CHIP C	100PF	J		
C525			CK73GB1H103K	CHIP C	0.010UF	K		
C527			CC73GCH1H050C	CHIP C	5.0PF	C		
C528			CK73GB1H102K	CHIP C	1000PF	K		
C529			CC73GCH1H060D	CHIP C	6.0PF	D		
C531			CC73GCH1H040C	CHIP C	4.0PF	C		
C532			CK73FB1C105K	CHIP C	1.0UF	K		
C533			CD04AC1A330M	ELECTRO	33UF	10WV		
C534,535			CK73GB1H103K	CHIP C	0.010UF	K		
C536			CC73GCH1H020C	CHIP C	2.0PF	C		
C537			CC73GCH1H040C	CHIP C	4.0PF	C		
C538,539			CC73GCH1H080D	CHIP C	8.0PF	D		
C541			CC73GCH1H040C	CHIP C	4.0PF	C		
C542			CC73GCH1H220J	CHIP C	22PF	J		
C543			CC73GCH1H680J	CHIP C	68PF	J		
C544			CC73GCH1H150J	CHIP C	15PF	J		
C545			CK73GB1H682K	CHIP C	6800PF	K		
C546			CK73GB1H103K	CHIP C	0.010UF	K		
C547			CD04AC1C100M	ELECTRO	10UF	16WV		
C548			CD04AB1C101M	ELECTRO	100UF	16WV		
C549			CK73GB1H102K	CHIP C	1000PF	K		
C550			CK73GB1H333K	CHIP C	0.033UF	K		
C551			CK73GB1H223K	CHIP C	0.022UF	K		
C552			CK73GB1H222K	CHIP C	2200PF	K		
C553,554			CK73GB1H103K	CHIP C	0.010UF	K		
C555			CK73FB1C105K	CHIP C	1.0UF	K		
C556			CK73GB1H473K	CHIP C	0.047UF	K		
C557			CK73GB1H104K	CHIP C	0.10UF	K		
C558			CD04AC1H010M	ELECTRO	1.0UF	50WV		
C559			CK73GB1H102K	CHIP C	1000PF	K		
C560			CD04AB1V100M	ELECTRO	10UF	35WV		
C561			CC73GCH1H101J	CHIP C	100PF	J		
C563			CD04AB1C470M	ELECTRO	47UF	16WV		
C565			CK73GB1A474K	CHIP C	0.47UF	K		
C566			CD04AC1HR47M	ELECTRO	0.47UF	50WV		
C567			CC73GCH1H221J	CHIP C	220PF	J		E8E9
C567			CC73GCH1H821J	CHIP C	820PF	J		E7
C571			CC73GCH1H020C	CHIP C	2.0PF	C		
C572			CK73GB1H104K	CHIP C	0.10UF	K		
C573			CK73GB1H103K	CHIP C	0.010UF	K		
C574			CK73GB1H104K	CHIP C	0.10UF	K		
C575			CD04AC1V4R7M	ELECTRO	4.7UF	35WV		
C576			CK73GB1H103K	CHIP C	0.010UF	K		
C577			CK73GB1H104K	CHIP C	0.10UF	K		

E7 : KDC-W40AY **E8** : KDC-W3534A **E9** : KDC-W3534G
(**E** : Europe **K** : North America **M** : Other Areas **W** : Without Europe)

⚠ Indicates safety critical components.

PARTS LIST

ELECTRIC UNIT (X34-433x-xx)

Ref. No.	Add	New	Parts No.	Description				Destination
C578			CK73GB1H103K	CHIP C	0.010UF	K		E7
C578			CK73GB1H821K	CHIP C	820PF	K		E8E9
C579			CK73GB1A474K	CHIP C	0.47UF	K		
C580			CK73GB1H104K	CHIP C	0.10UF	K		E7
C581			CK73GB1H104K	CHIP C	0.10UF	K		E8E9
C582			CK73GB1H103K	CHIP C	0.010UF	K		E8E9
C601			CD04AB1H010M	ELECTRO	1.0UF	50WV		
C602-605			C90-5684-05	NP-ELECT	0.22UF	50WV		
C606			CK73GB1A105K	CHIP C	1.0UF	K		
C607			C90-6802-05	ELECTRO	1UF	50WV		
C608			CD04AB1V100M	ELECTRO	10UF	35WV		
C801			CD04AB1V100M	ELECTRO	10UF	35WV		
C802			CK73GB1H103K	CHIP C	0.010UF	K		E8E9
C803			CD04AB1V100M	ELECTRO	10UF	35WV		E8E9
C804			CC73GCH1H331J	CHIP C	330PF	J		E8E9
C805,806			CC73GCH1H100D	CHIP C	10PF	D		E8E9
C901,902			CD04AB1C101M	ELECTRO	100UF	16WV		
CN2			E41-2581-05	FLAT CABLE CONNECTOR				
⚠ J1			E58-0991-05	RECTANGULAR RECEPTACLE				
J2			E04-0326-05	RF COAXIAL CABLE RECEPTACLE				
J5			E58-0992-05	RECTANGULAR RECEPTACLE				
CF51			L72-0805-05	CERAMIC FILTER				
CF52,53			L72-0806-05	CERAMIC FILTER				
CF54			L72-0804-05	CERAMIC FILTER				
L1			L33-1988-05	CHOKE COIL ASSY				
L2			L33-1978-05	CHOKE COIL				
L61			L40-4795-91	SMALL FIXED INDUCTOR (4.7UH)				
L401			L40-4795-91	SMALL FIXED INDUCTOR (4.7UH)				
L500			L33-2260-05	CHOKE COIL				
L501			L40-6891-58	SMALL FIXED INDUCTOR (6.8UH)				
L502			L40-3301-58	SMALL FIXED INDUCTOR (33UH)				
L503			L40-1021-56	SMALL FIXED INDUCTOR (1MH)				
L504			L40-1011-58	SMALL FIXED INDUCTOR (100UH)				
L505			L31-0979-05	FM-RF COIL (ANT)				
L506			L31-0981-05	FM-RF COIL (RF)				
L507			L32-0945-05	FM OSCILLATING COIL (VCO)				
L508			L30-0779-05	FM IFT				
L509			L30-0781-05	AM IFT				
L510-515			L40-4795-91	SMALL FIXED INDUCTOR (4.7UH)				
X1			L78-0879-05	RESONATOR (10.0MHZ)				
X2			L77-2920-05	CRYSTAL RESONATOR (32.768KHZ)				
X3			L77-2002-05	CRYSTAL RESONATOR (4.332MHZ)				E8E9
X501			L77-2077-05	CRYSTAL RESONATOR (10.25MHZ)				
F	2D		N80-3010-48	PAN HEAD TAPTITE SCREW				
G	2D		N83-3005-48	PAN HEAD TAPTITE SCREW				
H	2D		N83-3020-48	PAN HEAD TAPTITE SCREW				
J	3D		N86-2606-48	BINDING HEAD TAPTITE SCREW				
R1			RD14BB2C102J	RD	1.0K	J	1/6W	
R4-7			RK73GB2A103J	CHIP R	10K	J	1/10W	
R8			RK73FB2B681J	CHIP R	680	J	1/8W	
R9			RK73GB2A103J	CHIP R	10K	J	1/10W	
R10			RK73GB2A473J	CHIP R	47K	J	1/10W	
R11-14			RK73PB2H100J	CHIP R	10	J	1/2W	

Ref. No.	Add	New	Parts No.	Description				Destination
R15			RD14DB2H100J	SMALL-RD	10	J	1/2W	
R33			RD14BB2C100J	RD	10	J	1/6W	
R51			RK73FB2B683J	CHIP R	68K	J	1/8W	
R52			RK73GB2A393J	CHIP R	39K	J	1/10W	
R53			RK73GB2A104J	CHIP R	100K	J	1/10W	
R100			RK73GB2A272J	CHIP R	2.7K	J	1/10W	
R101,102			RD14BB2C472J	RD	4.7K	J	1/6W	
R103			RD14BB2C103J	RD	10K	J	1/6W	E7
R104			RK73GB2A223J	CHIP R	22K	J	1/10W	
R105			RK73GB2A473J	CHIP R	47K	J	1/10W	
R106			RD14DB2H332J	SMALL-RD	3.3K	J	1/2W	
R107			RD14BB2C333J	RD	33K	J	1/6W	
R108			RK73GB2A103J	CHIP R	10K	J	1/10W	
R109			RD14BB2C223J	RD	22K	J	1/6W	
R112			RD14BB2C203J	RD	20K	J	1/6W	
R114-117			RK73GB2A103J	CHIP R	10K	J	1/10W	
R201,202			RK73GB2A103J	CHIP R	10K	J	1/10W	
R203			RK73GB2A473J	CHIP R	47K	J	1/10W	
R204-206			RK73GB2A223J	CHIP R	22K	J	1/10W	E8E9
R204,205			RK73GB2A223J	CHIP R	22K	J	1/10W	E7
R207			RK73GB2A223J	CHIP R	22K	J	1/10W	E7
R209			RK73GB2A223J	CHIP R	22K	J	1/10W	E9
R209,210			RK73GB2A223J	CHIP R	22K	J	1/10W	E7E8
R211			RK73GB2A223J	CHIP R	22K	J	1/10W	E9
R212,213			RD14BB2C471J	RD	470	J	1/6W	
R214			RK73GB2A473J	CHIP R	47K	J	1/10W	
R215			RD14BB2C473J	RD	47K	J	1/6W	
R216			RD14BB2C471J	RD	470	J	1/6W	E8E9
R217			RK73GB2A222J	CHIP R	2.2K	J	1/10W	
R218			RD14BB2C473J	RD	47K	J	1/6W	
R219			RD14BB2C472J	RD	4.7K	J	1/6W	
R220			RK73GB2A223J	CHIP R	22K	J	1/10W	
R224			RD14BB2C222J	RD	2.2K	J	1/6W	E8E9
R225			RK73GB2A103J	CHIP R	10K	J	1/10W	E7
R226			RK73GB2A222J	CHIP R	2.2K	J	1/10W	
R227			RK73GB2A473J	CHIP R	47K	J	1/10W	
R228			RD14BB2C473J	RD	47K	J	1/6W	
R229			RK73GB2A123J	CHIP R	12K	J	1/10W	
R301			RK73GB2A222J	CHIP R	2.2K	J	1/10W	
R302			RK73GB2A101J	CHIP R	100	J	1/10W	
R303			RK73GB2A222J	CHIP R	2.2K	J	1/10W	
R304			RK73GB2A472J	CHIP R	4.7K	J	1/10W	
R307-309			RK73GB2A102J	CHIP R	1.0K	J	1/10W	
R310			RK73GB2A104J	CHIP R	100K	J	1/10W	
R312			RD14BB2C472J	RD	4.7K	J	1/6W	
R314			RD14BB2C472J	RD	4.7K	J	1/6W	
R315			RK73GB2A222J	CHIP R	2.2K	J	1/10W	
R316			RK73GB2A472J	CHIP R	4.7K	J	1/10W	
R317			RK73GB2A222J	CHIP R	2.2K	J	1/10W	
R318			RK73GB2A472J	CHIP R	4.7K	J	1/10W	
R320,321			RK73GB2A472J	CHIP R	4.7K	J	1/10W	
R402			RD14BB2C222J	RD	2.2K	J	1/6W	
R403			RD14BB2C102J	RD	1.0K	J	1/6W	
R404,405			RD14BB2C222J	RD	2.2K	J	1/6W	
R406			RD14BB2C104J	RD	100K	J	1/6W	

E7 : KDC-W40AY **E8** : KDC-W3534A **E9** : KDC-W3534G
(**E** : Europe **K** : North America **M** : Other Areas **W** : Without Europe)

⚠ Indicates safety critical components.

PARTS LIST

ELECTRIC UNIT (X34-433x-xx)

Ref. No.	Add	New	Parts No.	Description	Destination
R407-409			RD14BB2C222J	RD 2.2K J 1/6W	
R411			RD14BB2C225J	RD 2.2M J 1/6W	
R412			RD14BB2C222J	RD 2.2K J 1/6W	
R413			RD14BB2C474J	RD 470K J 1/6W	
R414			RD14BB2C102J	RD 1.0K J 1/6W	
R415			RD14BB2C474J	RD 470K J 1/6W	
R501			RK73GB2A682J	CHIP R 6.8K J 1/10W	
R502			RK73GB2A222J	CHIP R 2.2K J 1/10W	
R503			RK73EB2E222J	CHIP R 2.2K J 1/4W	
R504			RK73GB2A102J	CHIP R 1.0K J 1/10W	
R505			RK73GB2A105J	CHIP R 1.0M J 1/10W	
R506			RK73GB2A102J	CHIP R 1.0K J 1/10W	
R521-524			RK73GB2A104J	CHIP R 100K J 1/10W	
R525			RK73GB2A331J	CHIP R 330 J 1/10W	
R526			RK73GB2A562J	CHIP R 5.6K J 1/10W	
R527			RK73GB2A104J	CHIP R 100K J 1/10W	
R528			RD14BB2C104J	RD 100K J 1/6W	
R541			RK73GB2A562J	CHIP R 5.6K J 1/10W	
R542			RK73GB2A222J	CHIP R 2.2K J 1/10W	
R543			RK73GB2A220J	CHIP R 22 J 1/10W	
R544			RK73GB2A432J	CHIP R 4.3K J 1/10W	
R545			RK73GB2A333J	CHIP R 33K J 1/10W	
R546			RK73GB2A104J	CHIP R 100K J 1/10W	
R547,548			RK73GB2A471J	CHIP R 470 J 1/10W	
R549			RD14BB2C473J	RD 47K J 1/6W	
R561			RK73GB2A272J	CHIP R 2.7K J 1/10W	
R581			RK73GB2A102J	CHIP R 1.0K J 1/10W	
R582			RD14BB2C1R0J	RD 1.0 J 1/6W	
R604			RK73GB2A154J	CHIP R 150K J 1/10W	
R606			RK73GB2A331J	CHIP R 330 J 1/10W	
R607			RK73GB2A154J	CHIP R 150K J 1/10W	
R608			RK73GB2A103J	CHIP R 10K J 1/10W	
R609			RK73GB2A432J	CHIP R 4.3K J 1/10W	
R610			RK73GB2A100J	CHIP R 10 J 1/10W	
R801,802			RK73GB2A222J	CHIP R 2.2K J 1/10W	E8E9
R803			RD14BB2C222J	RD 2.2K J 1/6W	E8E9
R806			RD14BB2C102J	RD 1.0K J 1/6W	E8E9
R807			RK73GB2A472J	CHIP R 4.7K J 1/10W	E8E9
R901,902			RK73GB2A334J	CHIP R 330K J 1/10W	
R903			RK73GB2A153J	CHIP R 15K J 1/10W	
R904			RK73GB2A223J	CHIP R 22K J 1/10W	
R905,906			RK73GB2A104J	CHIP R 100K J 1/10W	
R907-914			RD14BB2C104J	RD 100K J 1/6W	
R915			RK73GB2A104J	CHIP R 100K J 1/10W	
R952-956			RK73GB2A000J	CHIP R 0.0 J 1/10W	
R962			RK73EB2E000J	CHIP R 0.0 J 1/4W	
R963			RK73GB2A000J	CHIP R 0.0 J 1/10W	
R964			RK73EB2E000J	CHIP R 0.0 J 1/4W	
R965			RK73GB2A000J	CHIP R 0.0 J 1/10W	
R966			RK73EB2E000J	CHIP R 0.0 J 1/4W	
R967			RK73GB2A000J	CHIP R 0.0 J 1/10W	
R970			RK73EB2E000J	CHIP R 0.0 J 1/4W	
R971			RK73GB2A000J	CHIP R 0.0 J 1/10W	
R972			RK73EB2E000J	CHIP R 0.0 J 1/4W	
R973-978			RK73GB2A000J	CHIP R 0.0 J 1/10W	
R980,981			RK73GB2A000J	CHIP R 0.0 J 1/10W	
D1			S2V60✻A	DIODE	
D2			MTZJ8.2B	ZENER DIODE	
D3			1SR139-400T64	DIODE	
D4			1SS133	DIODE	
D6			MTZJ12B	ZENER DIODE	
D52			MTZJ6.8B	ZENER DIODE	
D55			1SS133	DIODE	
D101,102			1SR154-400	DIODE	
D103			1SR139-400T64	DIODE	
D104			1SR154-400	DIODE	
D105			MTZJ4.7B	ZENER DIODE	E7
D106,107			MTZJ6.8B	ZENER DIODE	
D110-112			1SS133	DIODE	
D501			IMSA-6802-E	SURGE ABSORBER	
D502,503			RN739F	DIODE	
D504-506			KV1720STL-G	VARIABLE CAPACITANCE DIODE	
D508,509			MTZJ6.8B	ZENER DIODE	
D510			1SS133	DIODE	
D610			1SS133	DIODE	
D901			MTZJ4.7B	ZENER DIODE	
IC1			30302MAPA26FP	MICROCONTROLLER IC	
IC3			BD4912-V4	ANALOGUE IC	
IC7			E-TDA7479AD	ANALOGUE IC	E8E9
IC8			S-80836CNNB-J	MOS-IC	
IC10			E-TDA7513T	ANALOGUE IC	
IC11			M24C04-WDW6TP	ROM IC	
IC14			TB2904HQ	ANALOGUE IC	
Q1			UMC2N	TRANSISTOR	
Q2			2SB1565	TRANSISTOR	
Q3			2SC4081	TRANSISTOR	
Q5			UMC2N	TRANSISTOR	
Q6			2SB1565	TRANSISTOR	
Q7			2SC4155A(Q,R,S	TRANSISTOR	
Q8			2SA1603A	TRANSISTOR	
Q9			RT1N241M	TRANSISTOR	
Q51			2SC4155A(Q,R,S	TRANSISTOR	
Q101			2SC4155A(Q,R,S	TRANSISTOR	
Q103			2SC4081	TRANSISTOR	
Q104,105			RT1N441M	TRANSISTOR	
Q401			RT1P144M	TRANSISTOR	
Q501			HN3G01J(BL)-F	TRANSISTOR	
Q502			3SK126-F	DUAL FET	
Q503			UMG4N	TRANSISTOR	E8E9
Q802			2SC4155A(Q,R,S	TRANSISTOR	E8E9
Q901			2SC4155A(Q,R,S	TRANSISTOR	
Q902,903			2SA1603A	TRANSISTOR	
TH1			PRF18BE471QS2	POSITIVE RESISTOR	

MECHANISM ASSY (X92-5690-00)

2	1B		A10-5329-01	CHASSIS	
5	2B		D10-4910-03	ARM ASSY	
8	2A		D10-4911-03	LEVER ASSY	
10	2A		D10-4906-33	ARM	

E7 : KDC-W40AY **E8** : KDC-W3534A **E9** : KDC-W3534G
(**E** : Europe **K** : North America **M** : Other Areas **W** : Without Europe)

⚠ Indicates safety critical components.

PARTS LIST

MECHANISM ASSY (X92-5690-00)

Ref. No.	Add	New	Parts No.	Description	Destination
11	2A		D10-4907-33	ARM	
12	3A		D10-4908-03	ARM	
13	3A		D10-4909-03	ARM	
14	3B		D10-4915-03	ARM	
15	2A		D10-4916-23	SLIDER	
16	3B		D10-4914-12	SLIDER	
17	2B		D10-4588-13	SLIDER	
18	2B		D10-4917-04	ARM	
19	2B		D10-4596-24	ARM	
22	2A		D13-2151-04	GEAR	
23	2B		D13-2152-04	GEAR	
24	3B		D13-2153-04	GEAR	
25	3B		D13-2154-04	GEAR	
26	3B		D13-2155-04	WORM	
27	2B		D13-2156-14	GEAR	
28	3B		D13-2157-04	GEAR	
29	2B		D13-2158-04	GEAR	
30	2B		D13-2168-04	GEAR	
31	3B		D13-2171-04	GEAR	
32	1B		D13-2400-13	RACK (GEAR)	
33	2A		D14-0759-04	ROLLER	
35	2B		D21-2382-04	SHAFT	
36	1A		D23-0954-04	RETAINER	
37	1B		D39-0246-05	DAMPER	
38	2B		G01-3072-04	EXTENSION SPRING	
39	2A		G01-3073-04	TORSION COIL SPRING	
40	2A		G01-3074-04	EXTENSION SPRING	
41	1B		G01-4615-04	EXTENSION SPRING	
42	2A		G01-3076-04	EXTENSION SPRING	
43	1B		G01-3077-14	EXTENSION SPRING	
44	2B		G02-1399-04	FLAT SPRING	
45	2B		G02-1547-04	FLAT SPRING	
51	1A		J22-0473-21	MOUNTING HARDWARE	
52	3B		J22-0474-12	MOUNTING HARDWARE	
53	1B	✻	J22-0519-03	MOUNTING HARDWARE	
55	1A		J90-1138-31	GUIDE	
56	1B		J90-1023-03	GUIDE	
DFPC1	3A		J86-0027-05	FPC (LEAD FREE)	
A	2B		N09-4460-15	TAPTITE SCREW (PT2X8)	
B	1B		N09-6317-05	TAPTITE SCREW (1.6X6.0)	
C	2B		N09-6004-15	MACHINE SCREW (M1.7X2.5)	
E	2B		N09-6007-15	MACHINE SCREW (M2X2)	
F	1A		N09-6051-15	TAPTITE SCREW (PT2X5)	
G	2A		N19-2163-04	FLAT WASHER (1.6X6X0.25)	
H	1B		N39-2020-48	PAN HEAD MACHINE SCREW (M2X2)	
J	1B		N09-6108-15	TAPTITE SCREW (M2X3.5)	
K	3B		N09-6155-15	SEMS (TAPTITE SCREW) (PT2X6)	
DM1	3B		T42-1066-14	DC MOTOR (SPINDLE)	
DM2	2B		T42-1067-14	DC MOTOR (LOADING/SLED)	
DPU1	2B		X93-2130-01	OPTICAL PICKUP ASSY (LF)	

Ref. No.	Add	New	Parts No.	Description	Destination

E7 : KDC-W40AY **E8** : KDC-W3534A **E9** : KDC-W3534G
(**E** : Europe **K** : North America **M** : Other Areas **W** : Without Europe)

⚠ Indicates safety critical components.

SPECIFICATIONS

FM

Frequency Range (Frequency Step) ..... 87.5MHz~108.0MHz (50kHz)
Usable Sensitivity (S/N : 26dB) 0.7µV/75Ω
Quieting Sensitivity (S/N : 46dB) 1.6µV/75Ω
Frequency Response (±3.0dB) ..... 30Hz~15kHz
S/N ..... 65dB (MONO)
Selectivity (DIN) ..... ≧80dB (±400kHz)
Stereo Separation 35dB (1kHz)

MW (AM)

Frequency Range (Frequency Step) ..... 531kHz~1611kHz (9kHz)
Usable Sensitivity (S/N : 20dB) 25µV

LW

Frequency Range ..... 153kHz~281kHz
Usable Sensitivity (S/N : 20dB) 45µV

CD

Laser Diode ..... GaAlAs
Digital Filter (D/A) ..... 8 Times Over Sampling
D/A Converter ..... 1 Bit
Spindle Speed ..... 1000rpm~400rpm (CLV 2 times)
Wow & Flutter ..... Below Mesurable Limit
Frequency Response ..... 10Hz~20kHz (±1dB)
Total Harmonic Distortion 0.01% (1kHz)
S/N Ratio 105dB (1kHz)
Dynamic Range 93dB
MP3 Decode ..... Compliant with MPEG-1/2 Audio Layer-3
WMA Decode ..... Compliant with WINDOWS MEDIA AUDIO

Speaker Impedance ..... 4Ω~8Ω

AMPLIFIER

Maximum Power ..... 45W x 4
Power (DIN45324, +B=14.4V) ..... 28W x 4

TONE

Bass ..... 100Hz±8dB
Middle ..... 1kHz±8dB
Treble ..... 10kHz±8dB

GENERAL

Operating Voltage (11V~16V allowable) 14.4V
Current Consumption 10A
Installation Size
- Width 182mm
- Height 53mm
- Depth 155mm

Weight 1.40kg (3.1lbs)

KENWOOD follows a policy of continuous advancements in development.
For this reason specifications may be changed without notice.

DANGER:
Please do not look at the laser beam directly during repair or operation check.