Internal Use Only

LG

North/Latin America http://aic.lgservice.com
Europe/Africa http://eic.lgservice.com
Asia/Oceania http://biz.lgservice.com

PLASMA TV

SERVICE MANUAL

CHASSIS : PD11K

MODEL : 50PT350/351/351A/351K/ 50PT351N/352/ 50PT353/353A/353K/353N

50PT350-ZD/50PT351/351A/351K-ZC/ 50PT351N-ZC/50PT352-ZB/ 50PT353/353A/353K/353N-ZA

CAUTION

BEFORE SERVICING THE CHASSIS,
READ THE SAFETY PRECAUTIONS IN THIS MANUAL.

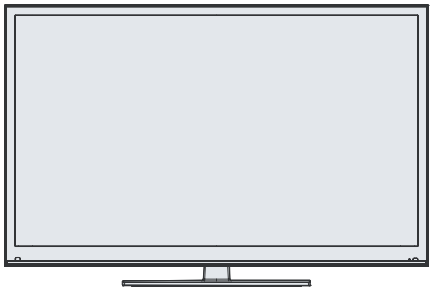

P/NO : MFL67013001(1101-REV00)

Printed in Korea

CONTENTS

CONTENTS 2

SAFETY PRECAUTIONS 3

SPECIFICATION 4

ADJUSTMENT INSTRUCTION 6

BLOCK DIAGRAM 14

EXPLODED VIEW 15

CIRCUIT DIAGRAM .....

Copyright ©2011 LG Electronics Inc. All rights reserved.
Only for training and service purposes

LGE Internal Use Only

SAFETY PRECAUTIONS

IMPORTANT SAFETY NOTICE

Many electrical and mechanical parts in this chassis have special safety-related characteristics. These parts are identified by ⚠ in the Schematic Diagram and Exploded View.
It is essential that these special safety parts should be replaced with the same components as recommended in this manual to prevent X-RADIATION, Shock, Fire, or other Hazards.
Do not modify the original design without permission of manufacturer.

General Guidance

An **isolation Transformer should always be used** during the servicing of a receiver whose chassis is not isolated from the AC power line. Use a transformer of adequate power rating as this protects the technician from accidents resulting in personal injury from electrical shocks.

It will also protect the receiver and it's components from being damaged by accidental shorts of the circuitry that may be inadvertently introduced during the service operation.

If any fuse (or Fusible Resistor) in this monitor is blown, replace it with the specified.

When replacing a high wattage resistor (Oxide Metal Film Resistor, over 1W), keep the resistor 10mm away from PCB.

Keep wires away from high voltage or high temperature parts.

Due to high vacuum and large surface area of picture tube, extreme care should be used in **handling the Picture Tube.**
Do not lift the Picture tube by it's Neck.

Leakage Current Cold Check(Antenna Cold Check)
With the instrument AC plug removed from AC source, connect an electrical jumper across the two AC plug prongs. Place the AC switch in the on position, connect one lead of ohm-meter to the AC plug prongs tied together and touch other ohm-meter lead in turn to each exposed metallic parts such as antenna terminals, phone jacks, etc.
If the exposed metallic part has a return path to the chassis, the measured resistance should be between 1MΩ and 5.2MΩ.
When the exposed metal has no return path to the chassis the reading must be infinite.
An other abnormality exists that must be corrected before the receiver is returned to the customer.

Leakage Current Hot Check (See below Figure)
Plug the AC cord directly into the AC outlet.
Do not use a line Isolation Transformer during this check.
Connect 1.5K/10watt resistor in parallel with a 0.15uF capacitor between a known good earth ground (Water Pipe, Conduit, etc.) and the exposed metallic parts.
Measure the AC voltage across the resistor using AC voltmeter with 1000 ohms/volt or more sensitivity.
Reverse plug the AC cord into the AC outlet and repeat AC voltage measurements for each exposed metallic part. Any voltage measured must not exceed 0.75 volt RMS which is corresponds to 0.5mA.
In case any measurement is out of the limits specified, there is possibility of shock hazard and the set must be checked and repaired before it is returned to the customer.

Leakage Current Hot Check circuit

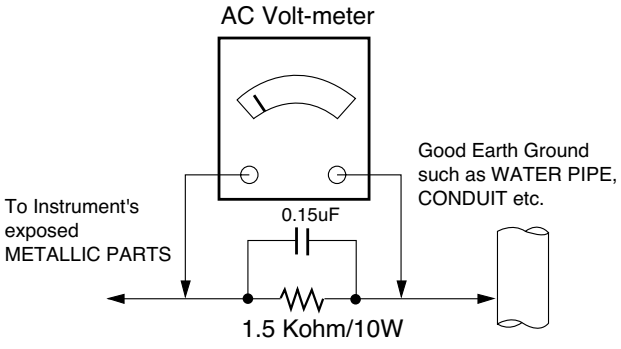

Copyright ©2011 LG Electronics Inc. All rights reserved.
Only for training and service purposes

LGE Internal Use Only

SPECIFICATION

NOTE : Specifications and others are subject to change without notice for improvement.

■ Application Range

This spec is applied to PDP TV used PD11K Chassis.

Model Name	Market	Brand
50PT350-ZD 50PT351/351A/351K/351N-ZC 50PT352-ZB 50PT353/353A/353K/353N-ZA	Albania, Austria, Belgium, Bosnia, Bulgaria, Coratia, Czech, Denmark, Estonia, Finland, France, Germany, Greece, Hungary, Ireland, Italy, Kazakhstan, Latvia, Lithuania, Luxembourg, Morocco, Netherlands, Norway, Poland, Portugal, Romania, Russia, Serbia, Slovakia, Slovenia, Spain, Sweden, Switzerland, Turkey, Ukraine, UK	LG

■ Specification

Each part is tested as below without special appointment.

(1) Temperature : 25 °C ± 5 °C (77 °F ± 9 °F), CST : 40 ± 5
(2) Relative Humidity: 65 % ± 10 %
(3) Power Voltage: Standard Input voltage (100 V - 240 V ~, 50 / 60 Hz)
* Standard Voltage of each product is marked by models.
(4) Specification and performance of each parts are followed each drawing and specification by part number in accordance with SBOM.
(5) The receiver must be operated for about 20 minutes prior to the adjustment.

■ Test Method

(1) Performance : LGE TV test method followed.
(2) Demanded other specification
Safety : CE, IEC specification, EMC : CE, IEC

Model Name	Market	Appliance
50PT350-ZD 50PT351/351A/351K/351N-ZC 50PT352-ZB 50PT353/353A/353K/353N-ZA	Albania, Austria, Belgium, Bosnia, Bulgaria, Coratia, Czech, Denmark, Estonia, Finland, France, Germany, Greece, Hungary, Ireland, Italy, Kazakhstan, Latvia, Lithuania, Luxembourg, Morocco, Netherlands, Norway, Poland, Portugal, Romania, Russia, Serbia, Slovakia, Slovenia, Spain, Sweden, Switzerland, Turkey, Ukraine, UK	Safety : IEC/EN60065 EMI : EN55013 EMS : EN55020

■ Module Specification

(1) 2D - 50” HD

No	Item	Specification	Remark
1	Display Screen Device	127 cm (50 inch) wide Color Display Module	PDP
2	Aspect Ratio	16:9	
3	PDP Module	PDP50T3####,	
		RGB Closed (Well) Type, Glass Filter (38%)	
		Pixel Format: 1024 horiz. By 768 ver	
4	Operating Environment	1) Temp. : 0 deg ~ 40 deg	LGE SPEC
		2) Humidity : 20 % ~ 80 %	
5	Storage Environment	3) Temp. : -20 deg ~ 60 deg	
		4) Humidity : 10 % ~ 90 %	
6	Input Voltage	AC 100 V ~ 240 V, 50 / 60 Hz	Maker LG

Copyright ©2011 LG Electronics Inc. All rights reserved.
Only for training and service purposes

LGE Internal Use Only

■ Model General Specification

No	Item	Specification	Remarks
1	Market	Albania, Austria, Belgium, Bosnia, Bulgaria, Coratia, Czech, Denmark, Estonia, Finland, France, Germany, Greece, Hungary, Ireland, Italy, Kazakhstan, Latvia, Lithuania, Luxembourg, Morocco, Netherlands, Norway, Poland, Portugal, Romania, Russia, Serbia, Slovenia, Spain, Sweden, Slovakia, Switzerland, Turkey, Ukraine, UK	36 Country
2	Broadcasting system	1) PAL/SECAM BG 2) PAL/SECAM DK 3) PAL Ⅰ/Ⅱ 4) SECAM L/L' 5) DVB T 6) DVB C	EU (PAL Market)
3	Receiving system	Analog : Upper Heterodyne Digital : COFDM	
4	Scart Jack (1EA)	PAL, SECAM	
5	Video Input (1EA)	PAL, SECAM, NTSC	Side AV
6	Component Input (1EA)	Y/Cb/Cr, Y/ Pb/Pr	
7	RGB Input	RGB-PC	Analog (D-Sub 15Pin)
8	HDMI Input (4EA)	HDMI-PC HDMI-DTV	HDMI/DVI,HDMI2, HDMI3
9	Audio Input (3 EA)	RGB/DVI Audio, Component, AV	L/R Input
10	SPDIF Out(1 EA)	SPDIF Out	
11	USB(1EA)	For SVC, S/W Download, DivX	
12	LAN	For UK models	

Copyright ©2011 LG Electronics Inc. All rights reserved.
Only for training and service purposes

LGE Internal Use Only

ADJUSTMENT INSTRUCTION

1. Application Range

This spec sheet is applied to all of the PDP TV with PD11K chassis.

2. Specification

(1) The adjustment is according to the order which is designated and which must be followed, according to the plan which can be changed only on agreeing.
(2) Power adjustment : Free Voltage. (100 V ~ 240 V, 50 Hz / 60 Hz.)
(3) Magnetic Field Condition: Nil.
(4) Input signal Unit: Product Specification Standard.
(5) Reserve after operation: Above 5 Minutes (Heat Run)
Temperature : at 25 °C ± 5 °C
Relative humidity 65 % ± 10 %
Input voltage : 220 V, 60 Hz.
(6) Adjustment equipments : Color Analyzer (CA-210 or CA-110), DDC Adjustment Jig equipment, SVC remote controller.
(7) The receiver must be operated for about 5 minutes prior to the adjustment when module is in the circumstance of over 15 °C
- In case of keeping module is in the circumstance of 0 °C, it should be placed in the circumstance of above 15 °C for 2 hours
- In case of keeping module is in the circumstance of below -20 °C, it should be placed in the circumstance of above 15 °C for 3 hours,.

● After RGB Full White in HEAT-RUN Mode, the receiver must be operated prior to the adjustment.
● Enter into HEAT-RUN MODE
1) Press the POWER ON KEY on R/C for adjustment.
2) OSD display and screen display PATTERN MODE.
- Set is activated HEAT run without signal generator in this mode.
- Single color pattern (WHITE) of HEAT RUN MODE uses to check panel.
- Caution : If you turn on a still screen more than 20 minutes (Especially digital pattern, cross hatch pattern), an after image may be occur in the black level part of the screen.

(8) Push The “IN STOP KEY” - For memory initialiLAtion.
Case1 : Software version up
1) After downloading S/W by USB , TV set will reboot automatically
2) Push “In-stop” key
3) Push “Power on” key
4) Function inspection
5) After function inspection, Push “In-stop” key.
Case2 : Function check at the assembly line
1) When TV set is entering on the assembly line, Push “In-stop” key at first.
2) Push “Power on” key for turning it on.
-> If you push “Power on” key, TV set will recover channel information by itself.
3) After function inspection, Push “In-stop” key.

3. Main PCB check process

* APC - After Manual-Insert, executing APC

3-1. Boot file Download

(1) Execute ISP program “Mstar ISP Utility” and then click “Config” tab.

(2) Set as below, and then click “Auto Detect” and check “OK” message
If “Error” is displayed, Check connection between computer, jig, and set.

(3) Click “Read” tab, and then load download file (XXXX.bin) by clicking “Read”

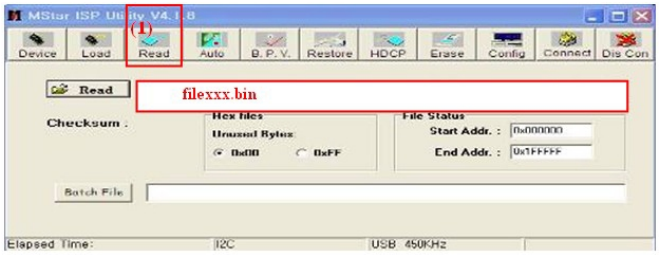

(4) Click “Connect” tab. If “Can’t” is displayed, Check connection between computer, jig, and set.

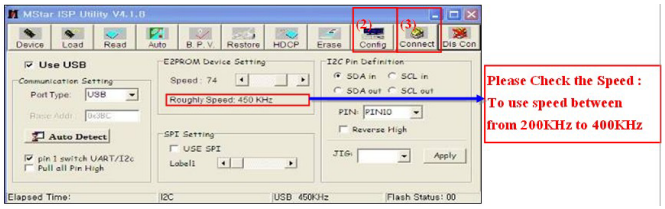

(5) Click “Auto” tab and set as below.

(6) Click “Run”.

(7) After downloadng, check “OK” message.

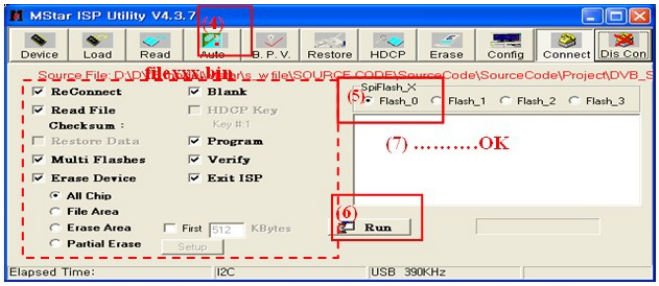

Copyright ©2011 LG Electronics Inc. All rights reserved.
Only for training and service purposes

LGE Internal Use Only

4. USB DOWNLOAD (*.epk file download)

(1) Put the USB Stick to the USB socket
(2) Automatically detecting update file in USB Stick
- If your downloaded program version in USB Stick is Low, it didn't work.
But your downloaded version is High, USB data is automatically detecting

(3) Show the message“ Copying files from memory ”

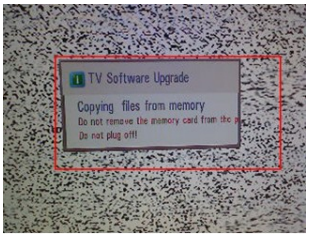

(4) Updating is staring.

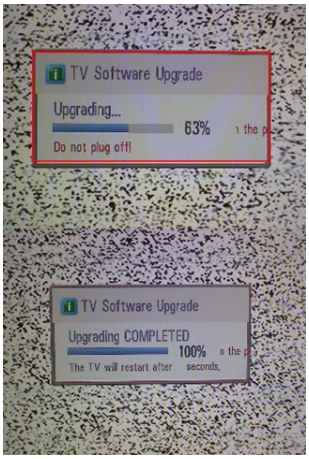

(5) Updating Completed, The TV will restart automatically.
(6) If your TV is turned on, check your updated version and Tool option. (explain the Tool option, next stage)
* If downloading version is more high than your TV have, TV can lost all channel data. In this case, you have to channel recover. if all channel data is cleared, you didn't have a DTV/ATV test on production line.

* After downloading, have to adjust TOOL OPTION again.
(1) Push "IN-START" key in service remote controller.
(2) Select "Tool Option 1" and Push “OK” button.
(3) Punch in the number. (Each of models has their number.)
(4) Completed selecting Tool option.

Model	Module	Tool option1	Tool option2	Tool option3	Tool option4	Tool option5
50PZ550-ZA	50R3	36928	37966	54144	26956	32
60PZ550-ZA	60R3	49216	37966	54144	26956	32
60PZ250-ZA	60R3	49280	37966	54144	26892	32
50PZ250-ZA	50R3	36992	37966	54144	26892	32
50PW450-ZA	50T3	37056	37966	54144	26892	32
42PW450-ZA	42T3	24768	37966	54144	26892	32
50PV350-ZA	50R3	37216	21582	54144	26892	32
50PT350-ZA	50T3	37312	21582	54144	26892	32
42PT350-ZA	42T3	25024	21582	54144	26892	32
60PV250-ZA	60R3	49536	21582	54144	26892	32
42PT250-ZA	42T3	25088	21582	54144	26892	32
60PV250-TA	60R3	49536	22934	54144	26892	32
50PV250-TA	50R3	37248	22934	54144	26892	32
50PW350-TA	50T3	37088	39318	54144	26956	32
42PW350-TA	42T3	24800	39318	54144	26956	32
60PZ550-TA	50R3	49216	39318	54144	26956	32
50PZ550-TA	50R3	36928	39318	54144	26956	32
50PT250-TA	50T3	37376	22934	54144	26892	32
42PT250-TA	42T3	25088	22934	54144	26892	32
50PZ550T-ZA	50R3	36928	37966	54144	29001	544
50PZ550T-ZA	50R3	36928	37966	54144	29004	544
60PZ250T-TA	60R3	49280	37966	54144	28940	544
50PZ250T-ZA	50R3	36992	37966	54144	28940	544
50PW450T-ZA	50T3	37056	37966	54144	28940	544
42PW450T-ZA	42T3	24768	37966	54144	28940	544
50PV350T-ZA	50R3	37216	21582	54144	28940	544
60PV250T-ZA	60R3	49536	21582	54144	28940	544

5. ADC Process

5-1. ADC

- Enter Service Mode by pushing “ADJ”key,
- Enter Internal ADC mode by pushing “►” key at “5. ADC Calibration”

* Caution: Using ‘power on’ button of the Adjustment R/C , power on TV.

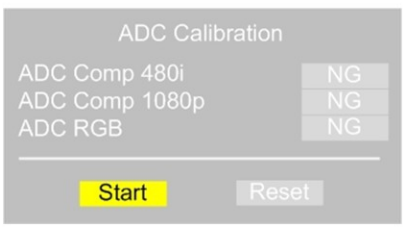

Copyright ©2011 LG Electronics Inc. All rights reserved.
Only for training and service purposes

LGE Internal Use Only

* ADC Calibration Protocol (RS232)

NO	Item	CMD 1	CMD 2	Data 0		
Enter Adjust Mode	Adjust ' Mode In '	A	A	0	0	When transfer the ' Mode In ' Carry the command.
ADC adjust	ADC Adjust	A	D	1	0	Automatically adjustment (The use of a internal pattern)

Adjust Sequence
- aa 00 00 [Enter Adjust Mode]
- xb 00 40 [Component1 Input (480i)]
- ad 00 10 [Adjust 480i Comp1]
- xb 00 60 [RGB Input (1024*768)]
- ad 00 10 [Adjust 1024*768 RGB]
- aa 00 90 End Adjust mode

* Required equipment : Adjustment R/C.

6. Function Check

6-1. Check display and sound

- Check Input and Signal items. (cf. work instructions)
(1) TV
(2) AV (SCART1/SCART2/ CVBS)
(3) COMPONENT (480i)
(4) RGB (PC : 1024 x 768 @ 60hz)
(5) HDMI
(6) PC Audio In

* Display and Sound check is executed by Remote controller.

* Caution : Not to push the INSTOP KEY after completion if the function inspection.

7. Total Assembly line process

7-1. POWER PCB Assy voltage adjustment (Vs voltage adjustment)

- Required Equipment for adjustment
  - D.M.M
- Condition for adjustment
  - No signal with the snow noise in RF mode)

7-2. Adjustment Preparation

- Required Equipment
- Remote controller for adjustment
- Color Analyzer (CS-1000, CA-100,100+,CA-210 or same product : CH 10 (PDP)
  * Please adjust CA-210, CA-100+ by CS-1000 before measuring
- Auto W/B adjustment instrument(only for Auto adjustment)
- 9 Pin D-Sub Jack(RS232C) is connected to the AUTO W/B EQUIPMENT.

Before Adjust of White Balance, Please press POWER ONLY key

Adjust Process will start by execute RS232C Command.

- Color temperature standards according to CSM and Module

CSM	PLASMA
Cool	11000K
Medium	9300K
Warm	6500K

- CS-1000/CA-100+/CA-210(CH 10)
White balance adjustment coordinates and color temperature.

CSM	Color Coordinate		Temp	±Color Coordinate
	x	y		
Cool	0.276	0.283	11000K	0.002
Medium	0.285	0.293	9300K	0.002
Warm	0.313	0.329	6500K	0.002

* Connecting picture of the measuring instrument (On Automatic control)
  - Inside PATTERN is used when W/B is controlled. Connect to auto controller or push Adjustment R/C POWER-ON ->Enter the mode of White-Balance, the pattern will come out.

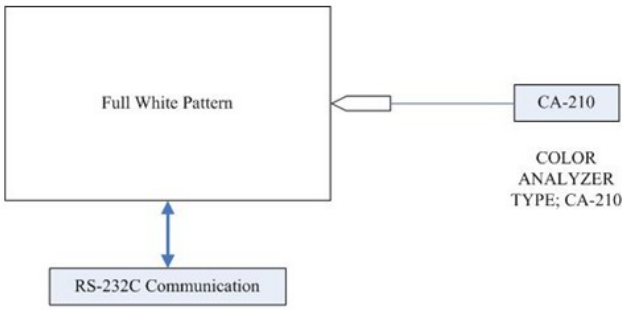

* Auto-control interface and directions
(1) Adjust in the place where the influx of light like floodlight around is blocked. (Illumination is less than 10ux).
(2) Measure and adjust after sticking the Color Analyzer (CA-100+, CA210) to the side of the module.
(3) Aging time
After aging start, keep the Power on (no suspension of power supply) and heat-run over 5 minutes

- Auto adjustment Map(RS-232C)
RS-232C COMMAND
[CMD ID DATA]
Wb 00 00 White Balance Start
Wb 00 ff White Balance End

	RS-232C COMMAND [CMD ID DATA]			MIN	CENTER (DEFAULT)			MAX
	Cool	Mid	Warm		Cool	Mid	Warm	
R Gain	jg	Ja	jd	00	192	192	192	192
G Gain	jh	Jb	je	00	192	192	192	192
B Gain	ji	Jc	jf	00	192	192	192	192
R Cut					64	64	64	128
G Cut					64	64	64	128
B Cut					64	64	64	128

Copyright ©2011 LG Electronics Inc. All rights reserved.
Only for training and service purposes

LGE Internal Use Only

* Caution
- Color Temperature : COOL, Medium, Warm.
- One of R Gain/G Gain/ B Gain should be kept on 0xC0, and adjust other two lower than C0.
(when R/G/B Gain are all C0, it is the FULL Dynamic Range of Module)

* Manual W/B process using adjusts Remote control.
(1) After enter Service Mode by pushing “ADJ” key,
(2) Enter White Balance by pushing “►” key at “. White Balance”
(3) Stick the sensor to the center of the screen and select each items(Red/Green/Blue Gain) using ▲/▼ (CH +/-) key on R/C.
(4) Adjust R/G/B Gain using ◄/► (VOL +/-) key on R/C.
(5) Adjust three modes all(Cool/Medium/Warm) : Fix the one of R/G/B Gain and Change the others.
(6) When the adjustment is completed, Enter “COPY ALL”.
(7) Exit adjustment mode using EXIT key on R/C.

* After You finish all adjustments, Press °∞In-start°± button and compare Tool option and Area option value with its BOM, if it is correctly same then unplug the AC cable.
If it is not same, then correct it same with BOM and unplug AC cable.
For correct it to the model’s module from factory JIG model.
* Push The “N STOP KEY” after completing the function inspection. And Mechanical Power Switch must be set “ON”.

* To check the coordinates of White Balance, you have to measure at the below conditions.
Picture mode : Vivid, Energy Saving : Off, Below the Advanced control, Dynamic Contrast : Off, Dynamic Colour : Off
Colour Temp.

-> Picture Mode change : Vivid ? Vivid(User)

7-3. DPM operation confirmation (Only Apply for MNT Model)

* Check if Power LED Color and Power Consumption operate as standard.

(1) Set Input to RGB and connect D-sub cable to set
(2) Measurement Condition: (100~240V@ 50/60Hz)
(3) Confirm DPM operation at the state of screen without Signal

7-4. DDC EDID Write (RGB 128Byte) -> Not used any more, Use Auto D/L

(1) Connect D-sub Signal Cable to D-Sub Jack.
(2) Write EDID DATA to EEPROM (24C02) by using DDC2B protocol.
(3) Check whether written EDID data is correct or not.
* For SVC main Ass’y, EDID have to be downloaded to Insert Process in advance.

7-5 DDC EDID Write (HDMI 256Byte) -> Not used any more, Use Auto D/L

(1) Connect HDMI Signal Cable to HDMI Jack.
(2) Write EDID DATA to EEPROM(24C02) by using DDC2B protocol.
(3) Check whether written EDID data is correct or not.
* For SVC main Ass’y, EDID have to be downloaded to Insert Process in advance.

7-6. EDID DATA

(1) All Data : HEXA Value
(2) Changeable Data :
*: Serial No : Controlled / Data:01
**: Month : Controlled / Data:00
***:Year : Controlled
****:Check sum

7-7. EDID DATA Auto Download

(1) Press Adj. key on the Adj. R/C,
(2) Select EDID D/L menu.
(3) By pressing Enter key, EDID download will begin
(4) If Download is successful, OK is display, but If Download is failure, NG is displayed.
(5) If Download is failure, Re-try downloads.

*Caution: Never connect HDMI & D-sub Cable when EDID downloaded.

● Edid data and Model option download (RS232)

NO	Item	CMD 1	CMD 2	Data 0		
Enter download Mode	download ‘ Mode In ’	A	A	0	0	When transfer the ‘ Mode In ’ Carry the command.
EDID data Model option download	download	A	E	00	10	Automatically download (The use of a internal pattern)

Copyright ©2011 LG Electronics Inc. All rights reserved.
Only for training and service purposes

LGE Internal Use Only

7-8. Manual Download

* Caution
  * Use the proper signal cable for EDID Download
    - Analog EDID : Pin3 exists
    - Digital EDID : Pin3 exists

* Caution:
  - Never connect HDMI & D-sub Cable at the same time.
  - Use the proper cables below for EDID Writing.
  - Download HDMI1, HDMI2 separately because HDMI1 is different from HDMI2.

For Analog EDID	For HDMI EDID	
D-sub to D-sub	DVI-D to HDMI or HDMI to HDMI	

No.	Item	Condition	Hex Data
1	Manufacturer ID	GSM	1E6D
2	Version	Digital : 1	01
3	Revision	Digital : 3	03

7-9. EDID DATA

(1) 2D - HD RGB EDID data

	0	1	2	3	4	5	6	7	8	9	A	B	C	D	E	F
00	00	FF	FF	FF	FF	FF	FF	00	1E	6D	01	00	01	01	01	01
10	01	15	01	03	08	A0	5A	78	0A	EE	91	A3	54	4C	99	26
20	0F	50	54	A1	08	00	31	40	45	40	61	40	01	01	01	01
30	01	01	01	01	01	01	64	19	00	40	41	00	26	30	18	88
40	36	00	40	84	63	00	00	1C	A0	0F	20	00	31	58	1C	20
50	28	80	11	00	BC	39	20	00	00	00	00	00	00	FD	00	3A
60	3E	1E	53	10	00	0A	20	20	20	20	20	20	00	00	00	FC
70	00	4C	47	20	54	56	0A	20	20	20	20	20	20	20	00	88

←C/S

(2) 2D - HD HDMI1 EDID data

	0	1	2	3	4	5	6	7	8	9	A	B	C	D	E	F
00	00	FF	FF	FF	FF	FF	FF	00	1E	6D	01	00	01	01	01	01
10	01	15	01	03	80	A0	5A	78	0A	EE	91	A3	54	4C	99	26
20	0F	50	54	A1	08	00	31	40	45	40	61	40	01	01	01	01
30	01	01	01	01	01	01	64	19	00	40	41	00	26	30	18	88
40	36	00	40	84	63	00	00	1C	A0	0F	20	00	31	58	1C	20
50	28	80	11	00	BC	39	20	00	00	00	00	00	00	FD	00	3A
60	3E	1E	53	10	00	0A	20	20	20	20	20	20	00	00	00	FC
70	00	4C	47	20	54	56	0A	20	20	20	20	20	20	20	01	0F

←C/S

	0	1	2	3	4	5	6	7	8	9	A	B	C	D	E	F
00	02	03	27	F1	4E	02	03	11	12	93	04	15	16	05	14	10
10	1F	22	20	26	15	07	50	09	57	07	68	03	0C	00	10	00
20	B8	2D	00	E3	05	03	01	02	3A	80	18	71	38	2D	40	58
30	2C	45	00	40	84	63	00	00	1E	01	1D	80	18	71	1C	16
40	20	58	2C	25	00	40	84	63	00	00	9E	01	1D	00	72	51
50	D0	1E	20	6E	28	55	00	40	84	63	00	00	1E	00	00	00
60	00	00	00	00	00	00	00	00	00	00	00	00	00	00	00	00
70	00	00	00	00	00	00	00	00	00	00	00	00	00	00	00	D2

←C/S

(3) 2D - HD HDMI2 EDID data

	0	1	2	3	4	5	6	7	8	9	A	B	C	D	E	F
00	00	FF	FF	FF	FF	FF	FF	00	1E	6D	01	00	01	01	01	01
10	01	15	01	03	80	A0	5A	78	0A	EE	91	A3	54	4C	99	26
20	0F	50	54	A1	08	00	31	40	45	40	61	40	01	01	01	01
30	01	01	01	01	01	01	64	19	00	40	41	00	26	30	18	88
40	36	00	40	84	63	00	00	1C	A0	0F	20	00	31	58	1C	20
50	28	80	11	00	BC	39	20	00	00	00	00	00	00	FD	00	3A
60	3E	1E	53	10	00	0A	20	20	20	20	20	20	00	00	00	FC
70	00	4C	47	20	54	56	0A	20	20	20	20	20	20	20	01	0F

←C/S

	0	1	2	3	4	5	6	7	8	9	A	B	C	D	E	F
00	02	03	27	F1	4E	02	03	11	12	93	04	15	16	05	14	10
10	1F	22	20	26	15	07	50	09	57	07	68	03	0C	00	20	00
20	B8	2D	00	E3	05	03	01	02	3A	80	18	71	38	2D	40	58
30	2C	45	00	40	84	63	00	00	1E	01	1D	80	18	71	1C	16
40	20	58	2C	25	00	40	84	63	00	00	9E	01	1D	00	72	51
50	D0	1E	20	6E	28	55	00	40	84	63	00	00	1E	00	00	00
60	00	00	00	00	00	00	00	00	00	00	00	00	00	00	00	00
70	00	00	00	00	00	00	00	00	00	00	00	00	00	00	00	C2

←C/S

(4) 2D - HD HDMI3 EDID data

	0	1	2	3	4	5	6	7	8	9	A	B	C	D	E	F
00	00	FF	FF	FF	FF	FF	FF	00	1E	6D	01	00	01	01	01	01
10	01	15	01	03	80	A0	5A	78	0A	EE	91	A3	54	4C	99	26
20	0F	50	54	A1	08	00	31	40	45	40	61	40	01	01	01	01
30	01	01	01	01	01	01	64	19	00	40	41	00	26	30	18	88
40	36	00	40	84	63	00	00	1C	A0	0F	20	00	31	58	1C	20
50	28	80	11	00	BC	39	20	00	00	00	00	00	00	FD	00	3A
60	3E	1E	53	10	00	0A	20	20	20	20	20	20	00	00	00	FC
70	00	4C	47	20	54	56	0A	20	20	20	20	20	20	20	01	0F

←C/S

	0	1	2	3	4	5	6	7	8	9	A	B	C	D	E	F
00	02	03	27	F1	4E	02	03	11	12	93	04	15	16	05	14	10
10	1F	22	20	26	15	07	50	09	57	07	68	03	0C	00	30	00
20	B8	2D	00	E3	05	03	01	02	3A	80	18	71	38	2D	40	58
30	2C	45	00	40	84	63	00	00	1E	01	1D	80	18	71	1C	16
40	20	58	2C	25	00	40	84	63	00	00	9E	01	1D	00	72	51
50	D0	1E	20	6E	28	55	00	40	84	63	00	00	1E	00	00	00
60	00	00	00	00	00	00	00	00	00	00	00	00	00	00	00	00
70	00	00	00	00	00	00	00	00	00	00	00	00	00	00	00	B2

←C/S

ⓐ Vender ID

INOUT	HEX
HDMI 1	10
HDMI 2	20
HDMI 3	30
HDMI4	40

● Checksum: Changeable by total EDID data.

EDID C/S data		3D-FHD		2D-FHD	
		HDMI	RGB	HDMI	RGB
check sum (Hex)	Block 0	C5	3D	1F	9E
	Block 1	2C (HDMI1)	-	6A(HDMI1)	-
		1C (HDMI2)		5A(HDMI2)	
		0C (HDMI3)			

EDID C/S data		3D-HD		2D-HD	
		HDMI	RGB	HDMI	RGB
check sum (Hex)	Block 0	C5	3D	1F	9E
	Block 1	2C (HDMI1)	-	6A(HDMI1)	-
		1C (HDMI2)		5A(HDMI2)	
		0C (HDMI3)			

Copyright ©2011 LG Electronics Inc. All rights reserved.
Only for training and service purposes

LGE Internal Use Only

8. Checking the EYE-Q Operation.

(1) Press the EYE Key on the adjustment remote controller.
(2) Check the Sensor DATA (It must be under 10) and keep the data longer than 1.5s
(3) Check 'OK'

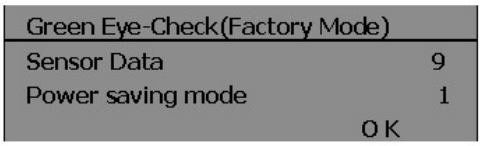

(Sensor DATA 0 ~ 4095, Power Saving Mode 0 ~ 12)
* IF you press IN-STAP Button, change Green Eye-check OSD.

9. Ping TEST (DVB T2 model only, PP11B/L)

* This test is to check Network operation.
(1) Connect LAN cable from Computer to TV Set
(2) When network operates normally, you can see "OK" on Computer

10. 3D Function Test

(Pattern Generator MSPG-3233, HDMI mode NO. 371 , pattern No. 81)

(1) Please input 3D test pattern like below

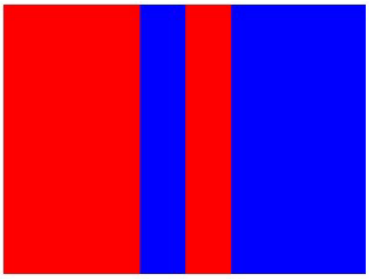

(2) Enter 3D mode , then select side by side
(If you don't wear a 3D Glasses, you will see the picture like below)

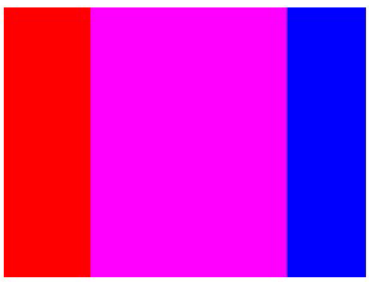

(3) Put on the 3D Glasses, And block the right side of Glasses (LEFT:OPEN[TEST], RIGHT:CLOSED)
And check the middle sides of picture , RED -> normal , others -> abnormal

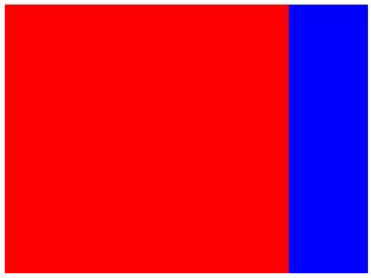

(4) Put on the 3D Glasses, And block the right side of Glasses (LEFT:CLOSED, RIGHT:OPEN[TEST])
And check the middle sides of picture , BLUE -> normal , others -> abnormal

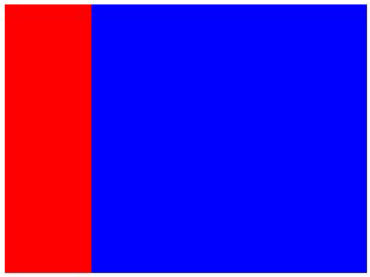

11. Model name & Serial number download

11-1. Model name & Serial number D/L

(1) Press "Power on" key of service remocon.(Baud rate : 115200 bps)
(2) Connect RS232 Signal Cable to RS-232 Jack.
(3) Write Serial number by use RS-232.
(4) Must check the serial number at signal test of customer support. (Refer to below).

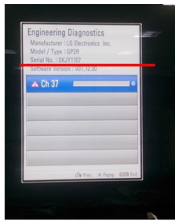

Copyright ©2011 LG Electronics Inc. All rights reserved.
Only for training and service purposes

LGE Internal Use Only

11-2. Signal TABLE

CMD	LENGTH	ADH	ADL	DATA_1	. . .	Data_n	CS	DELAY

CMD : A0h
LENGTH : 85~94h (1~16 bytes)
ADH : EEPROM Sub Address high (00~1F)
ADL : EEPROM Sub Address low (00~FF)
Data : Write data
CS : CMD + LENGTH + ADH + ADL + Data_1 + ... + Data_n
Delay : 20ms

11-3. Command Set

No.	Adjust mode	CMD(hex)	LENGTH(hex)	Description
1	EEPROM WRITE	A0h	84h+n	n-bytes Write (n = 1~16)

[Description]
FOS Default write : <7mode data> write
Vtotal, V_Frequency, Sync_Polarity, Htotal, Hstart, Vstart, 0, Phase
Data write : Model Name and Serial Number write in EEPROM,.

11-4. Method & notice

(1) Serial number D/L is using of scan equipment.
(2) Setting of scan equipment operated by Manufacturing Technology Group.
(3) Serial number D/L must be conformed when it is produced in production line, because serial number D/L is mandatory by D-book 4.0

* Manual Download (Model Name and Serial Number)
- If the TV set is downloaded By OTA or Service man, Sometimes model name or serial number is initialized.(Not always)
- There is impossible to download by bar code scan, so It need Manual download.

1) Press the 'instart' key of ADJ remote controller.
2) Go to the menu '5.Model Number D/L' like below photo.
3) Input the Factory model name(ex 42LD450-TA) or Serial number like photo.

4) Check the model name Instart menu ? Factory name displayed (ex 42LD450-TA)

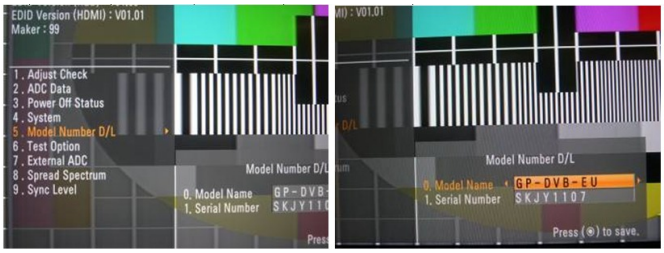

5) Check the Diagnostics (DTV country only) ? Buyer model displayed (ex 42LD450)

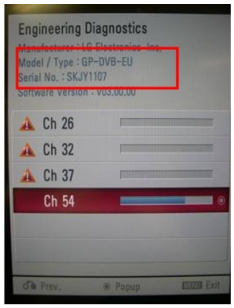

12. CI+ Key Download

12-1. Download Procedure

(1) Press "Power on" button of a service R/C.(Baud rate : 115200 bps)
(2) Connect RS232-C Signal Cable.
(3) Write CI+ Key through RS-232-C.
(4) Check whether the key was downloaded or not at 'In Start' menu. (Refer to below)

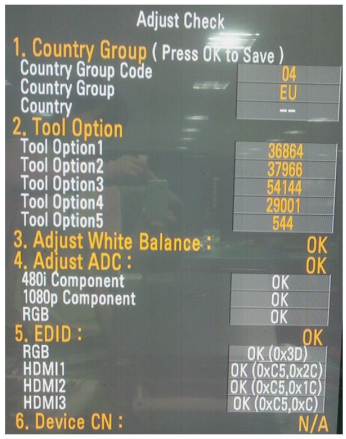

-> Check the Download to CI+ Key value in LGset.

12-2. Check the method of CI+ Key value

(1) check the method on Instart menu

Copyright ©2011 LG Electronics Inc. All rights reserved.
Only for training and service purposes

LGE Internal Use Only

(2) check the method of RS232C Command

1) into the main ass 'y mode (RS232 : aa 00 00)

CMD 1	CMD 2	Data 0	
A	A	0	0

2) check the key download for transmitted command (RS232 : ci 00 10)

CMD 1	CMD 2	Data 0	
C	1	1	0

3) result value

- normally status for download : OKx
- abnormally status for download : NGx

12-3. Check the method of CI+ Key value (RS232)

(1) into the main ass 'y mode (RS232 : aa 00 00)

CMD 1	CMD 2	Data 0	
A	A	0	0

(2) Check the mothed of CI+ key by command (RS232 : ci 00 20)

CMD 1	CMD 2	Data 0	
C	1	2	0

((3) result value

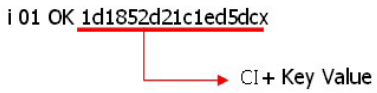

13. SW Download Guide.

※ Put a *.bin to USB Stick and Turn on TV

(1) Put the USB Stick to the USB socket

(2) Automatically detecting update file in USB Stick

* If your downloaded program version in USB Stick is Low, it didn 't work.
But your downloaded version is High, USB data is automatically detecting.

(3) Show the message" Copying files from memory "

(4) Updating is staring.

(5)0 Updating Completed, The TV will restart automatically.
After turn on TV, Please press ' IN-STOP ' button on ADJ Remote-control.
※ IF you don 't have ADJ R/C, enter ' Factory Reset ' in OPTION MENU.

(6) When TV turn on, check the Updated version on Diagnostics MENU.

Copyright ©2011 LG Electronics Inc. All rights reserved.
Only for training and service purposes

LGE Internal Use Only

BLOCK DIAGRAM

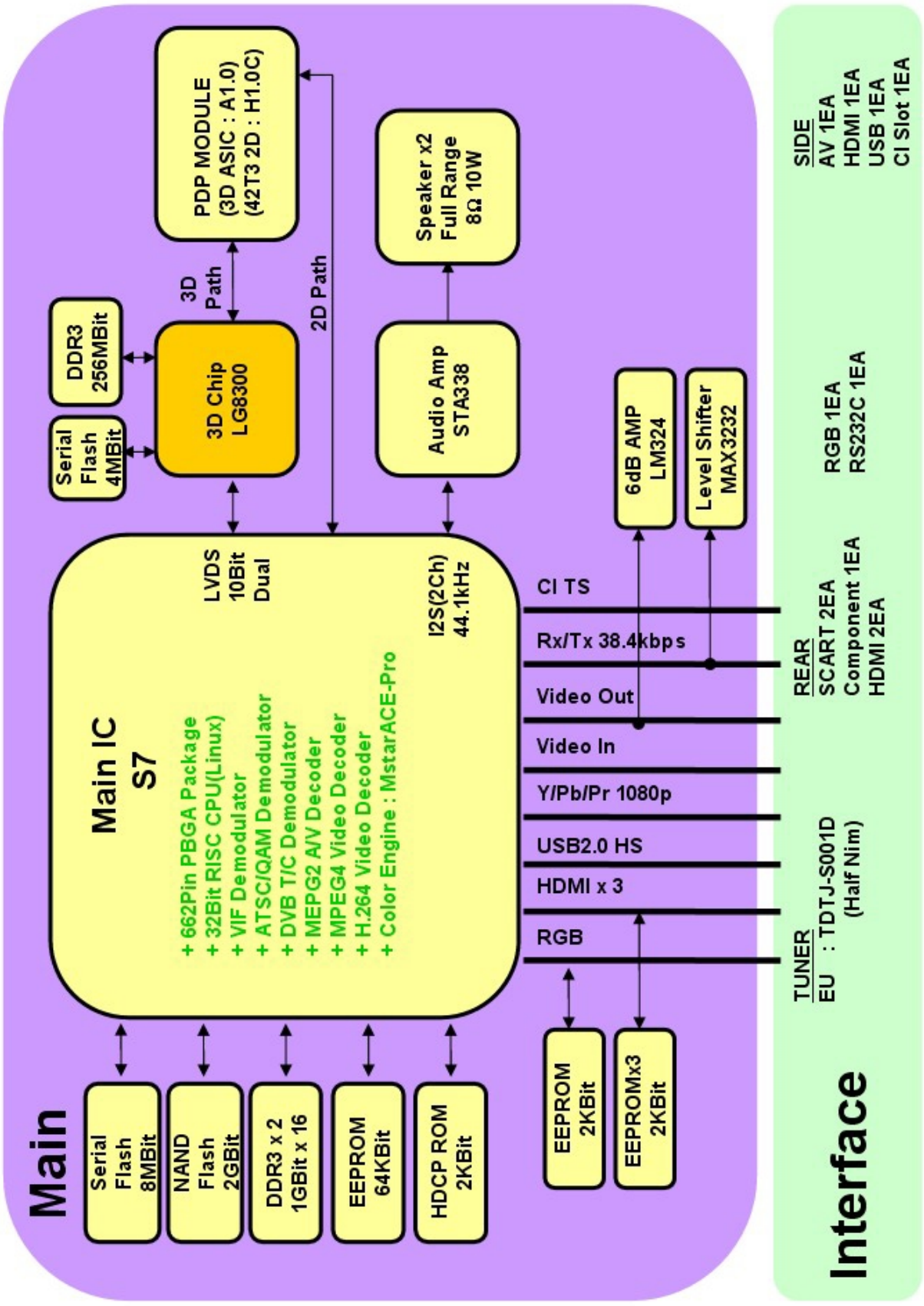

Copyright ©2011 LG Electronics Inc. All rights reserved.
Only for training and service purposes

LGE Internal Use Only

EXPLODED VIEW

IMPORTANT SAFETY NOTICE

Many electrical and mechanical parts in this chassis have special safety-related characteristics. These parts are identified by ⚠ in the Schematic Diagram and EXPLODED VIEW.
It is essential that these special safety parts should be replaced with the same components as recommended in this manual to prevent X-RADIATION, Shock, Fire, or other Hazards.
Do not modify the original design without permission of manufacturer.

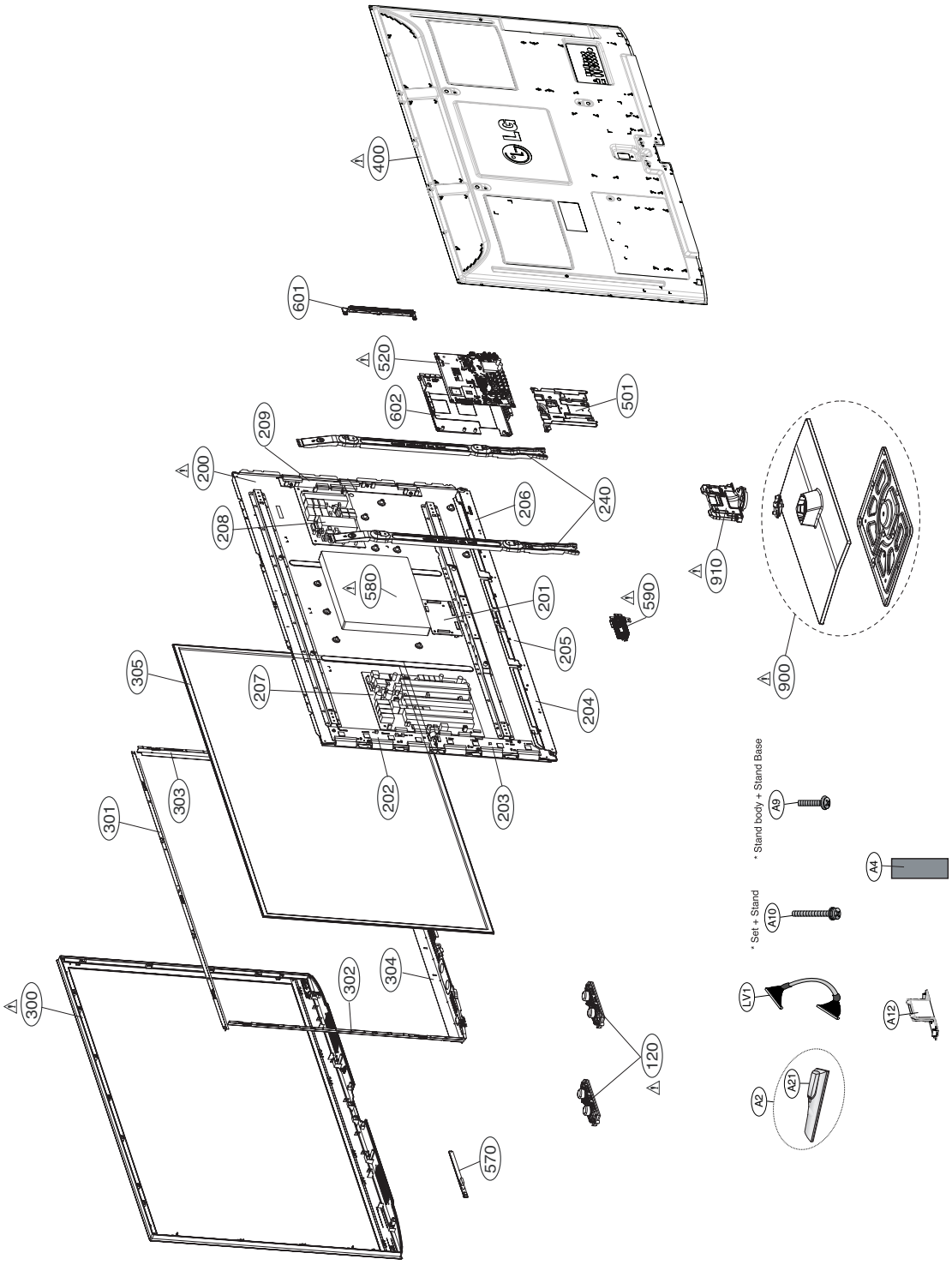

Copyright © 2011 LG Electronics Inc. All rights reserved.
Only for training and service purposes

LGE Internal Use Only

Full SCART

Half SCART / COMP1 Option

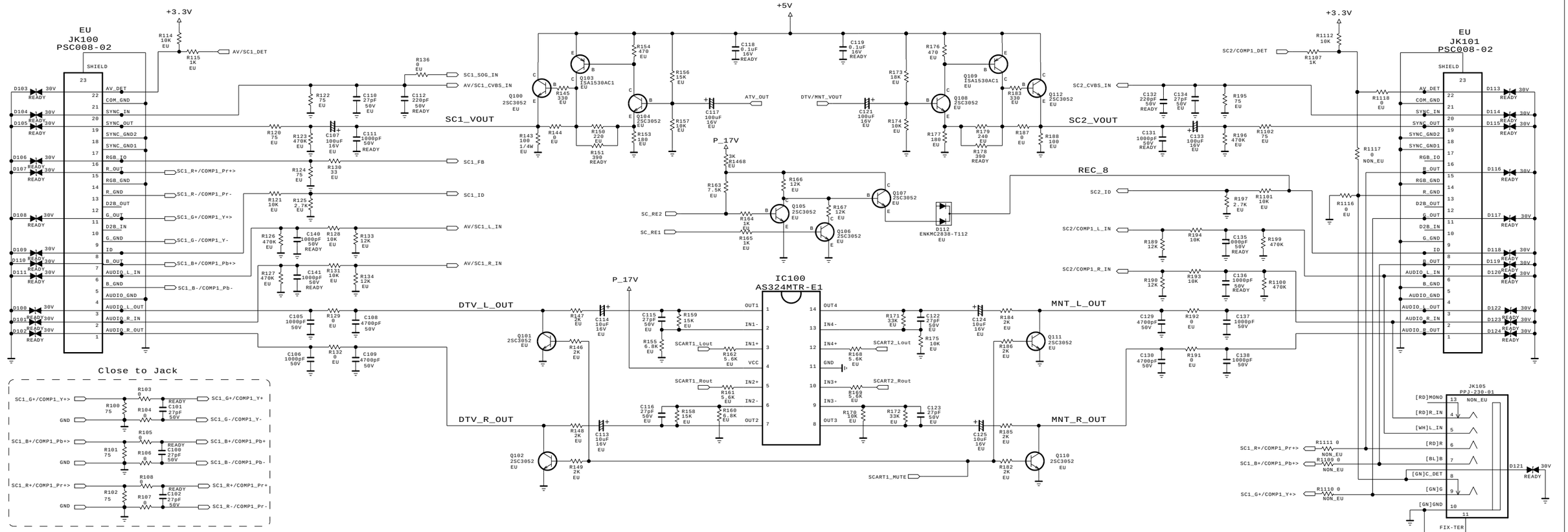

CI SLOT

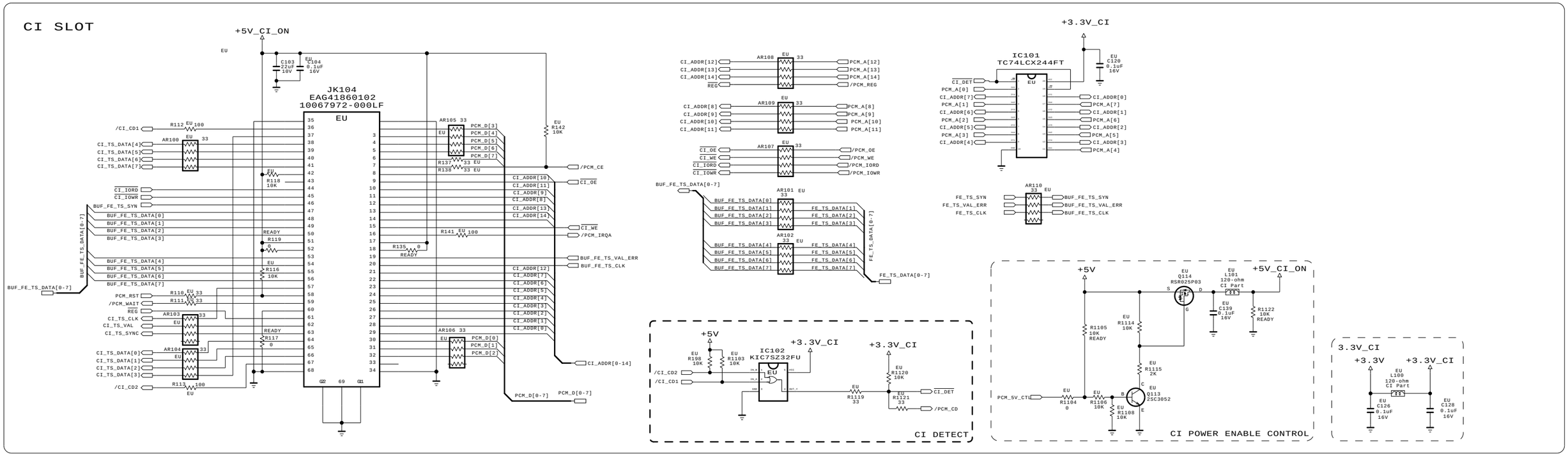

THE ⚠ SYMBOL MARK OF THIS SCHEMETIC DIAGRAM INCORPORATES SPECIAL FEATURES IMPORTANT FOR PROTECTION FROM X-RADIATION. FILRE AND ELECTRICAL SHOCK HAZARDS, WHEN SERVICING IF IS ESSENTIAL THAT ONLY MANUFATURES SPECFIED PARTS BE USED FOR THE CRITICAL COMPONENTS IN THE ⚠ SYMBOL MARK OF THE SCHEMETIC.

SECRET

LGElectronics

LG ELECTRONICS

MODEL	GP2R_S7R	DATE	2010-08-31
BLOCK	SCART/COMP1 CI Slot	SHEET	1

Copyright © 2011 LG Electronics Inc. All rights reserved.
Only for training and service purposes

LGE Internal Use Only

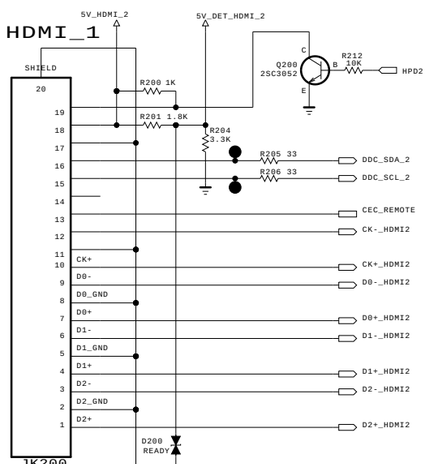

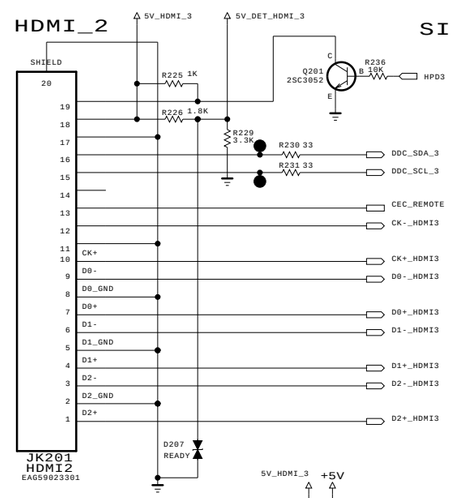

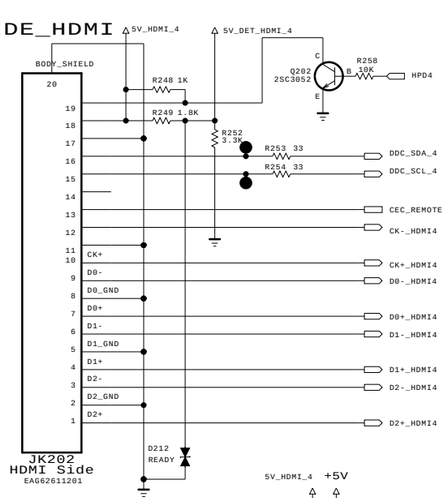

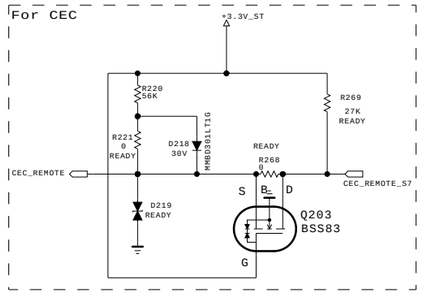

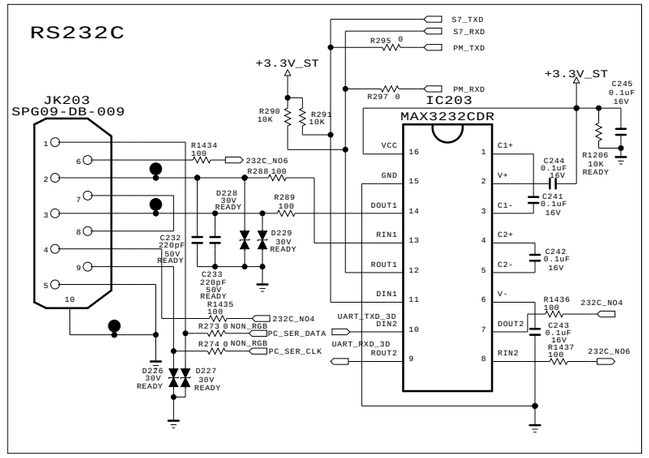

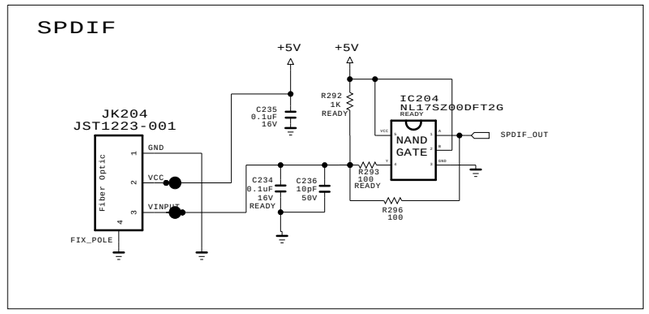

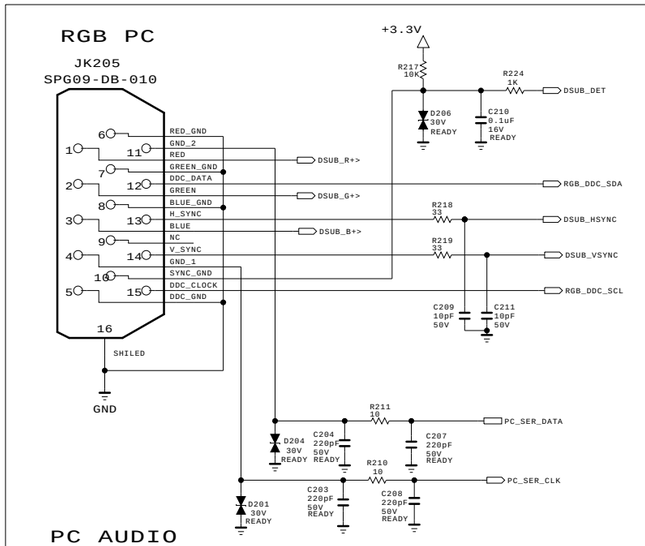

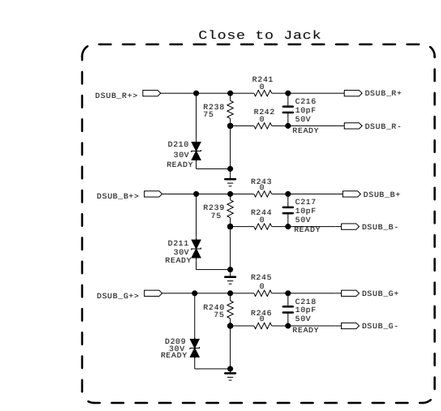

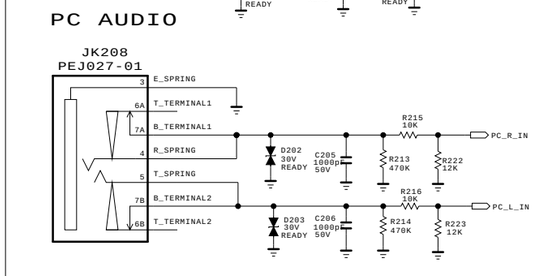

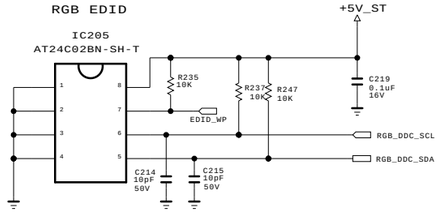

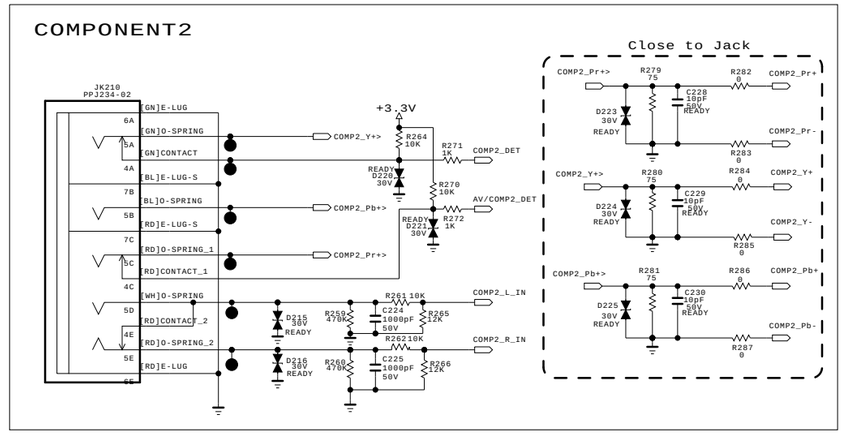

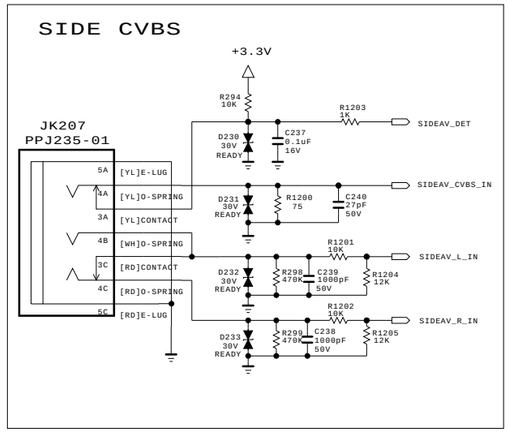

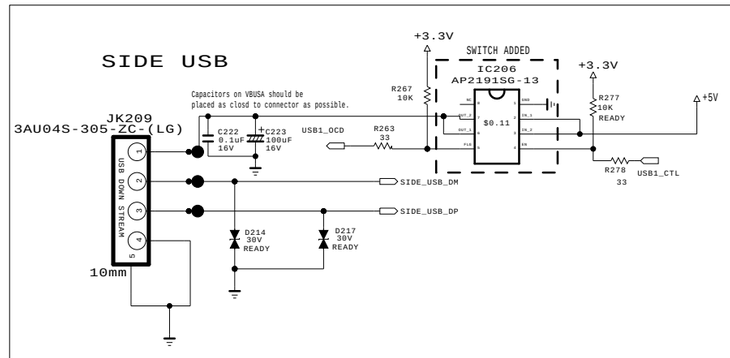

THE ⚠ SYMBOL MARK OF THIS SCHEMETIC DIAGRAM INCORPORATES SPECIAL FEATURES IMPORTANT FOR PROTECTION FROM X-RADIATION. FILRE AND ELECTRICAL SHOCK HAZARDS, WHEN SERVICING IF IS ESSENTIAL THAT ONLY MANUFATURES SPECFIED PARTS BE USED FOR THE CRITICAL COMPONENTS IN THE ⚠ SYMBOL MARK OF THE SCHEMETIC.

SECRET
LGElectronics

LG ELECTRONICS

MODEL	GP2R_S7R	DATE	2010-08-31
BLOCK	HDMI/RGB/RS232C/USB COMP2/Side CVBS/SPDIF	SHEET	2

Copyright © 2011 LG Electronics Inc. All rights reserved.
Only for training and service purposes

LGE Internal Use Only

H-NIM Tuner

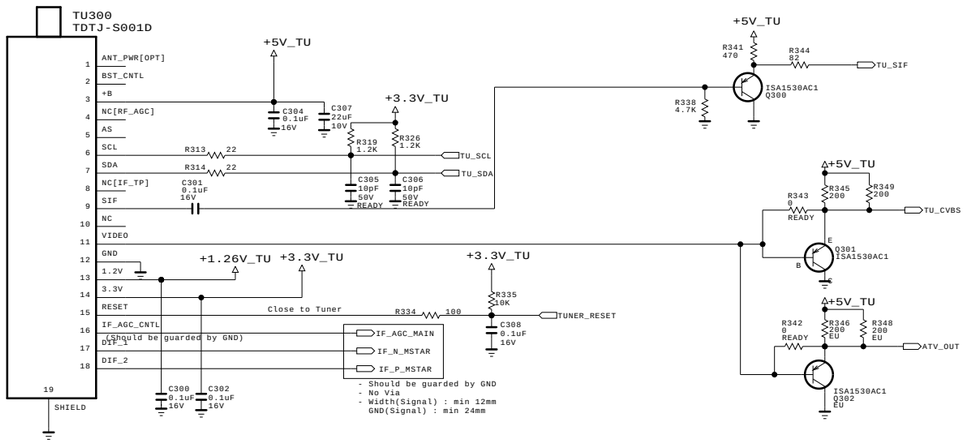

Audio AMP

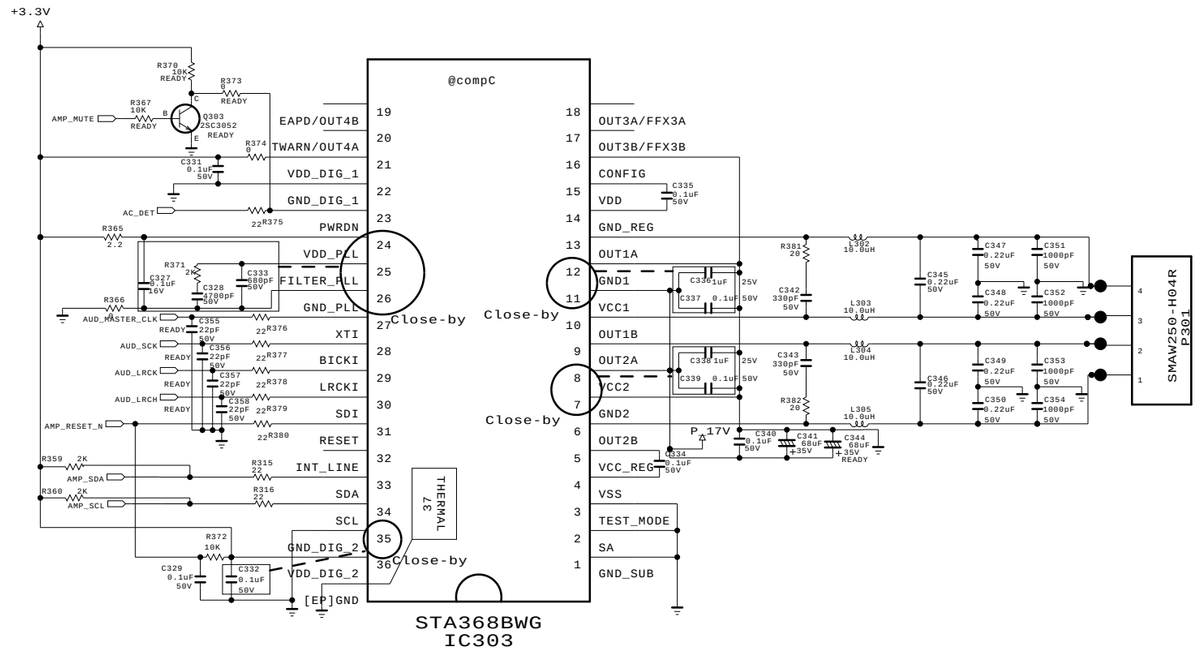

LVDS

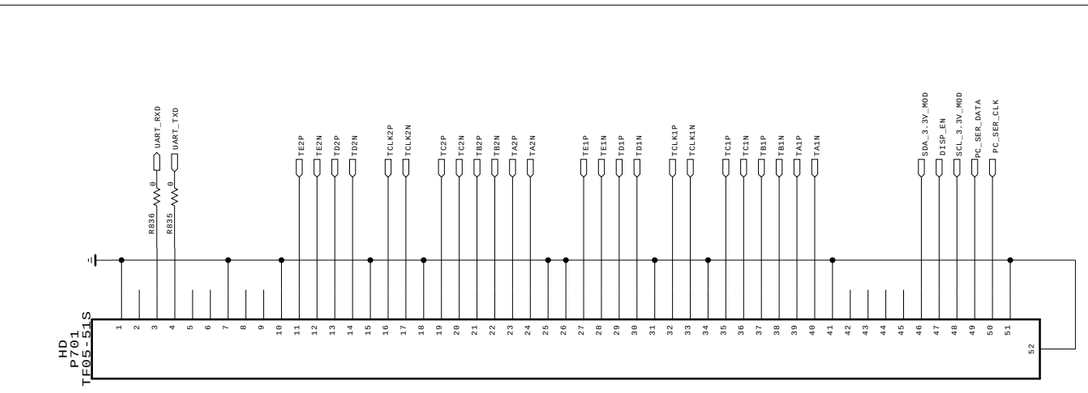

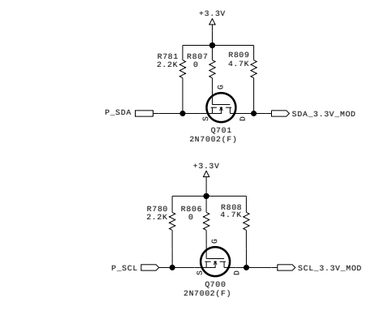

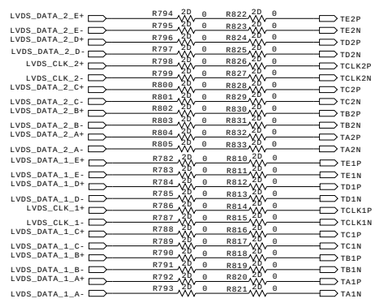

Key/IR

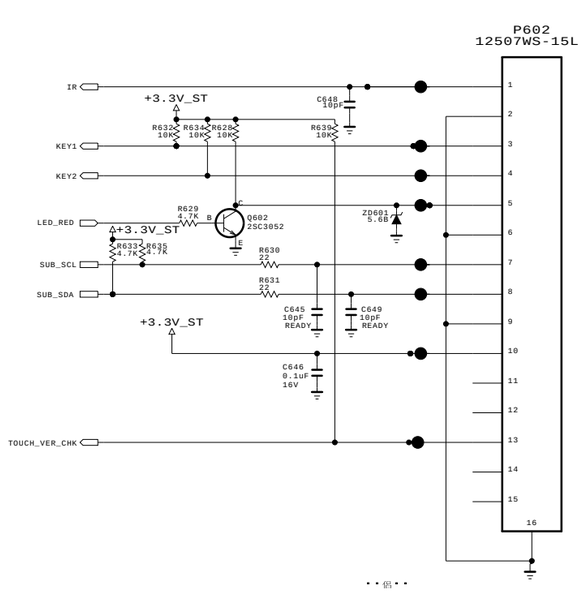

THE ⚠ SYMBOL MARK OF THIS SCHEMETIC DIAGRAM INCORPORATES SPECIAL FEATURES IMPORTANT FOR PROTECTION FROM X-RADIATION. FILRE AND ELECTRICAL SHOCK HAZARDS, WHEN SERVICING IF IS ESSENTIAL THAT ONLY MANUFATURES SPECFIED PARTS BE USED FOR THE CRITICAL COMPONENTS IN THE ⚠ SYMBOL MARK OF THE SCHEMETIC.

SECRET
LGElectronics

LG ELECTRONICS

MODEL	GP2R_S7R	DATE	2010-08-31
BLOCK	Tuner/Audio Amp LVDS / Key-IR	SHEET	3

Copyright © 2011 LG Electronics Inc. All rights reserved.
Only for training and service purposes

LGE Internal Use Only

VIDEO/AUDIO

IC400
LGE101DC-R [S7R DIVX/MS10]

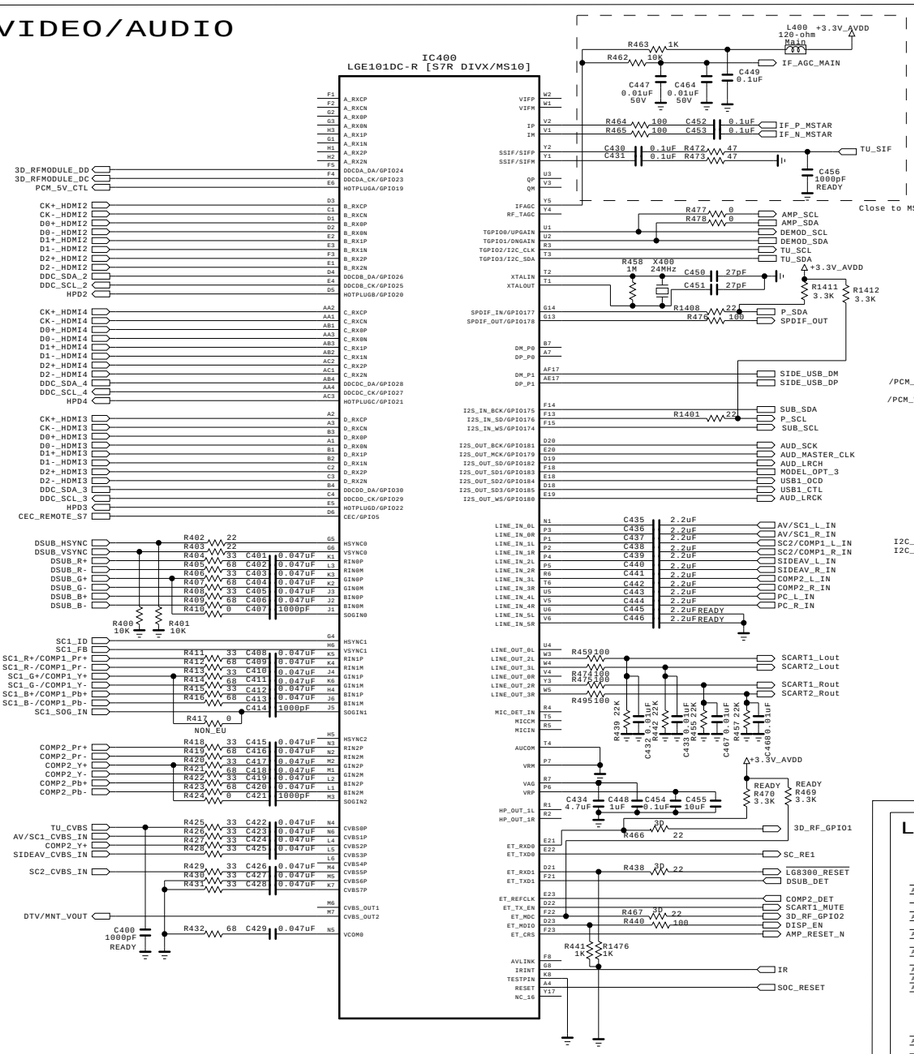

IC400
LGE101DC-R [S7R DIVX/MS10]

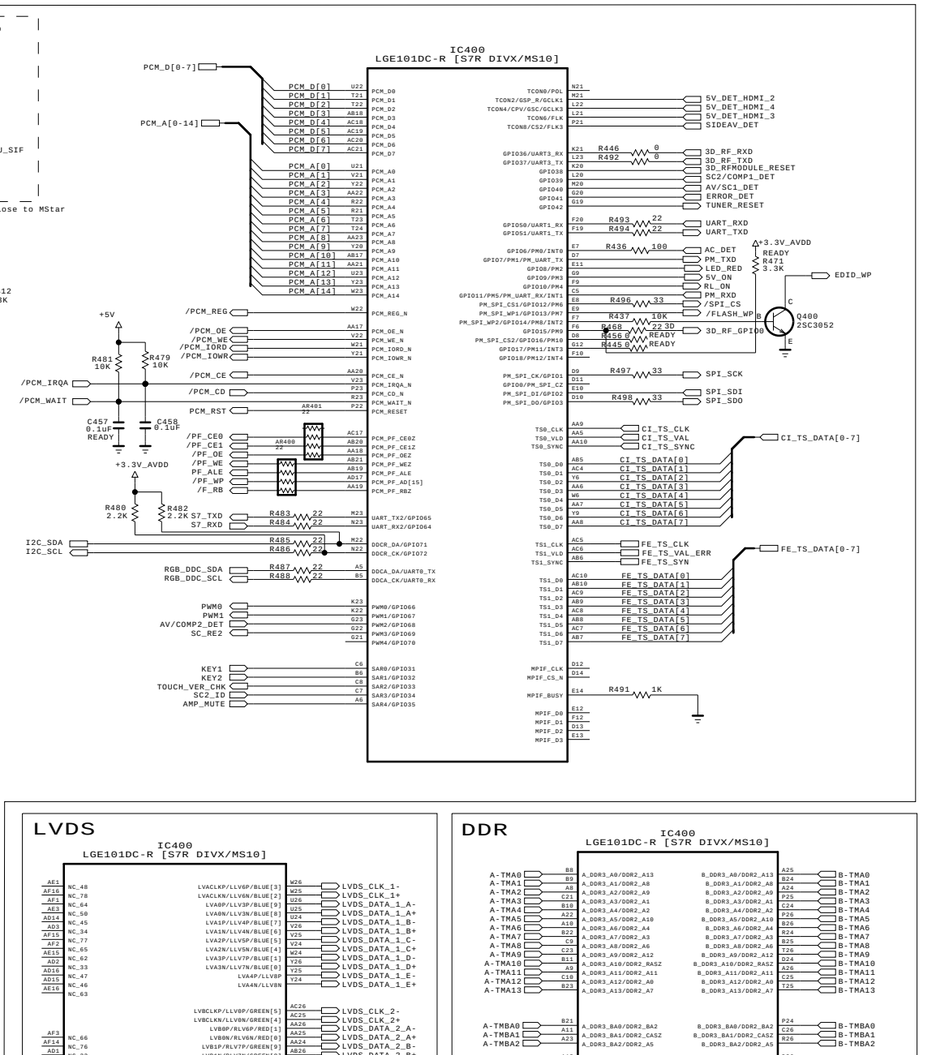

LVDS

IC400
LGE101DC-R [S7R DIVX/MS10]

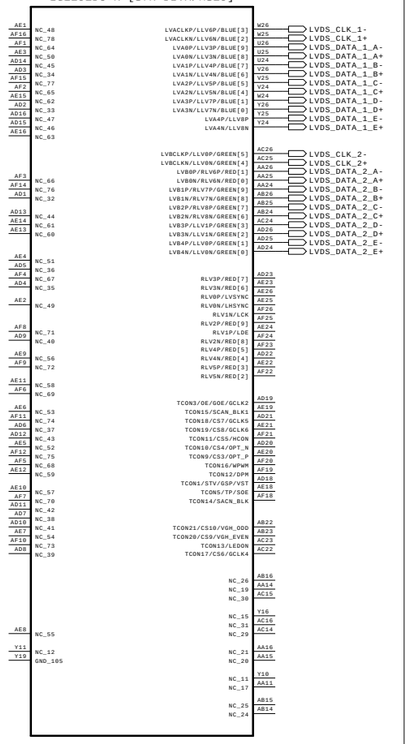

DDR

IC400
LGE101DC-R [S7R DIVX/MS10]

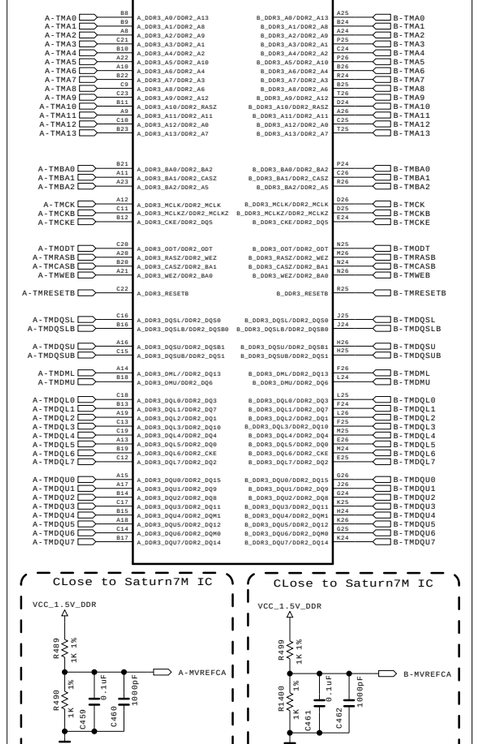

CLose to Saturn7M IC

CLose to Saturn7M IC

POWER

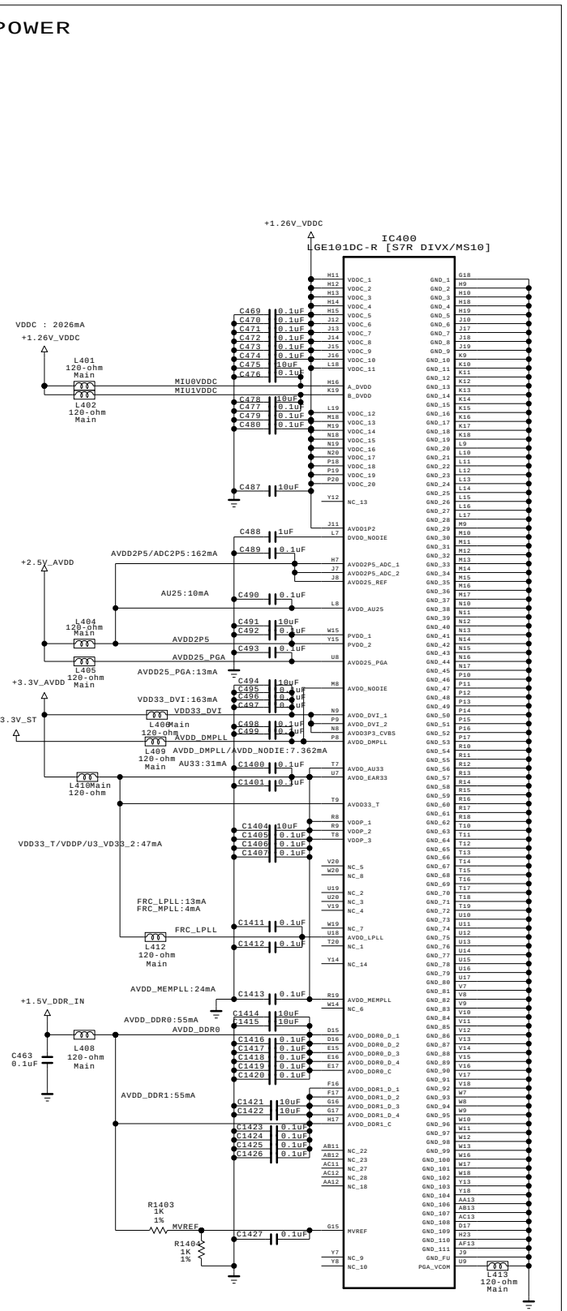

THE ⚠ SYMBOL MARK OF THIS SCHEMETIC DIAGRAM INCORPORATES SPECIAL FEATURES IMPORTANT FOR PROTECTION FROM X-RADIATION. FILRE AND ELECTRICAL SHOCK HAZARDS, WHEN SERVICING IF IS ESSENTIAL THAT ONLY MANUFATURES SPECFIED PARTS BE USED FOR THE CRITICAL COMPONENTS IN THE ⚠ SYMBOL MARK OF THE SCHEMETIC.

SECRET
LGElectronics

LG ELECTRONICS

MODEL	GP2R_S7R	DATE	2010-08-31
BLOCK	MAIN	SHEET	4

Copyright © 2011 LG Electronics Inc. All rights reserved.
Only for training and service purposes

LGE Internal Use Only

DDR3 Memory 1GBit x 2

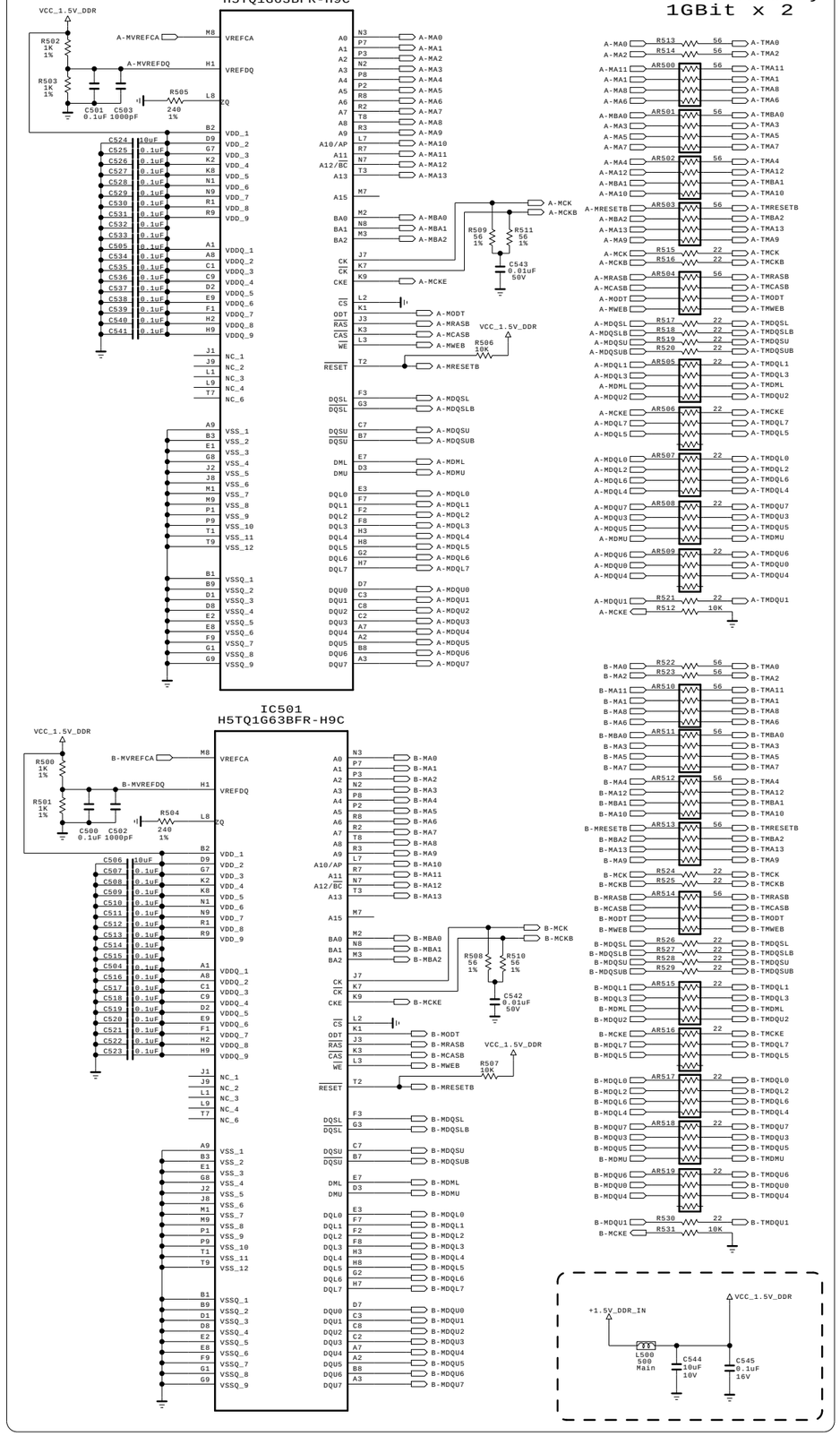

LG8300 DDR3 Memory 256MBit

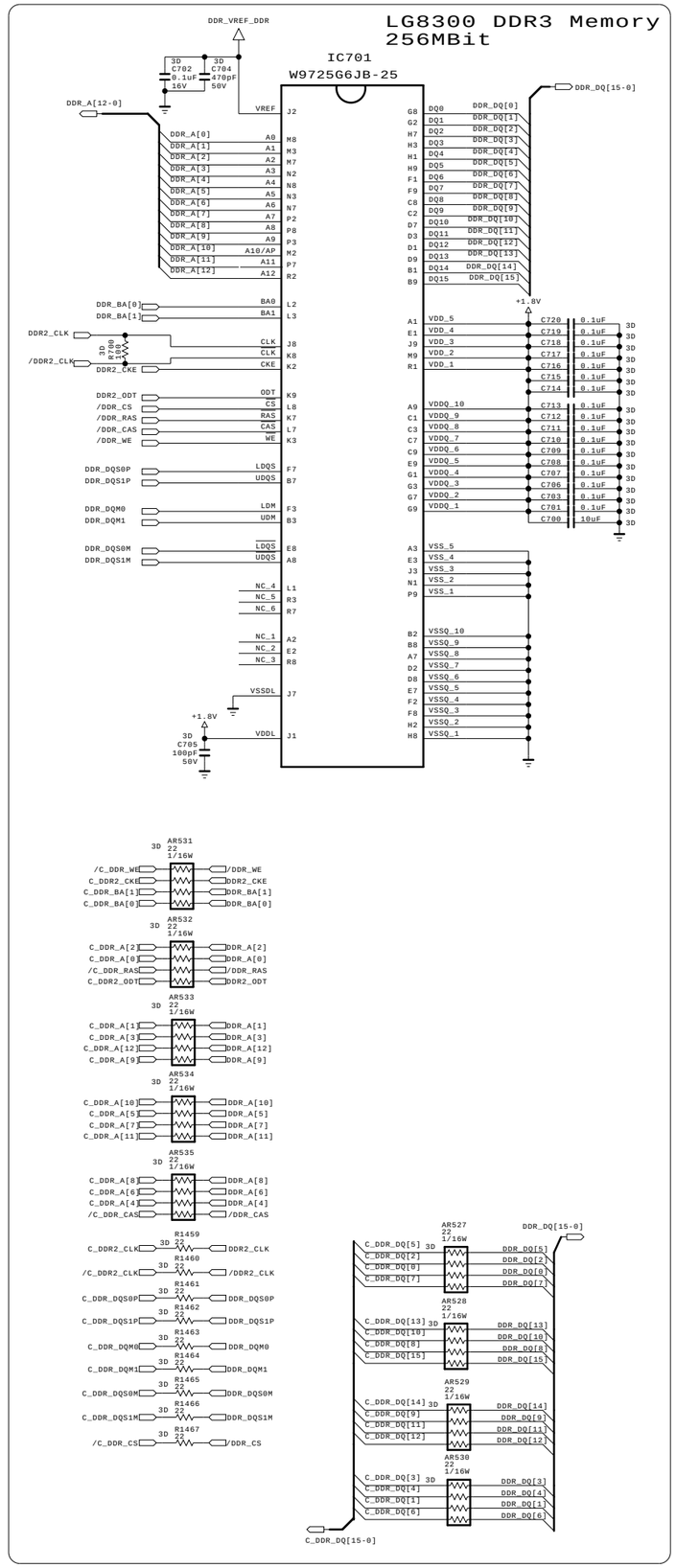

NAND Flash 1GBit

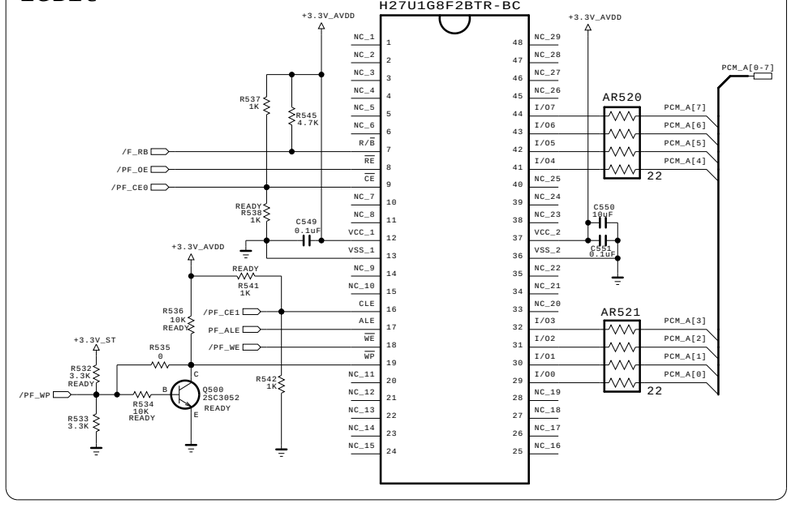

SERIAL FLASH 8MBit

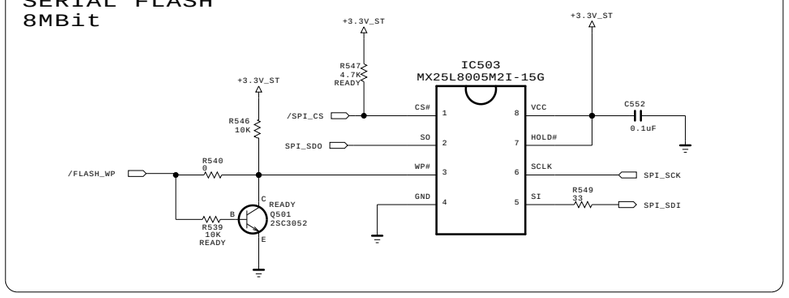

EEPROM 1MBit

A0'h

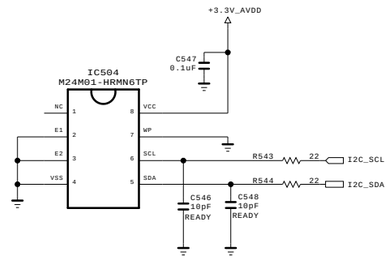

HDCP EEPROM 8KBit

Addr:10101--

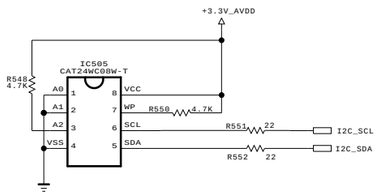

THE ⚠ SYMBOL MARK OF THIS SCHEMETIC DIAGRAM INCORPORATES SPECIAL FEATURES IMPORTANT FOR PROTECTION FROM X-RADIATION. FILRE AND ELECTRICAL SHOCK HAZARDS, WHEN SERVICING IF IS ESSENTIAL THAT ONLY MANUFATURES SPECFIED PARTS BE USED FOR THE CRITICAL COMPONENTS IN THE ⚠ SYMBOL MARK OF THE SCHEMETIC.

SECRET
LGElectronics

LG ELECTRONICS

MODEL	GP2R_S7R	DATE	2010-08-31
BLOCK	Memory	SHEET	5

Copyright © 2011 LG Electronics Inc. All rights reserved.
Only for training and service purposes

LGE Internal Use Only

Power Wafer

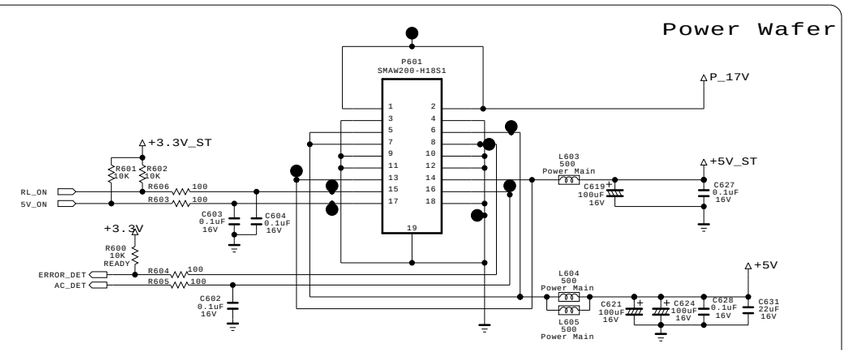

5Vst Enable

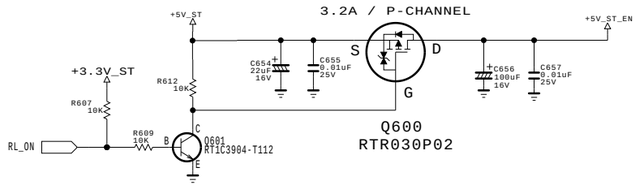

1.26V Core

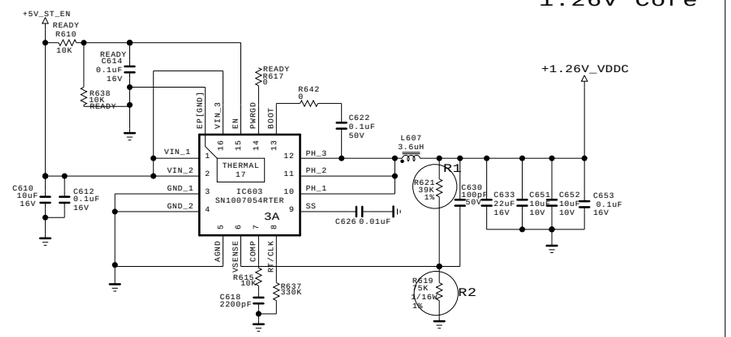

Switching freq: 600K

Vout=0.827*(1+R1/R2)

3.3V_AVDD / 2.5AVDD

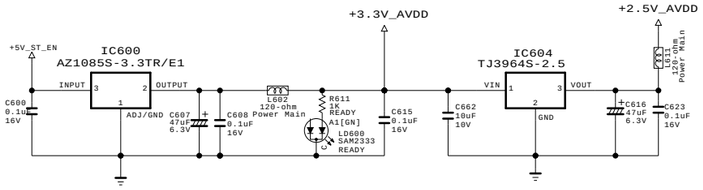

5V Tuner

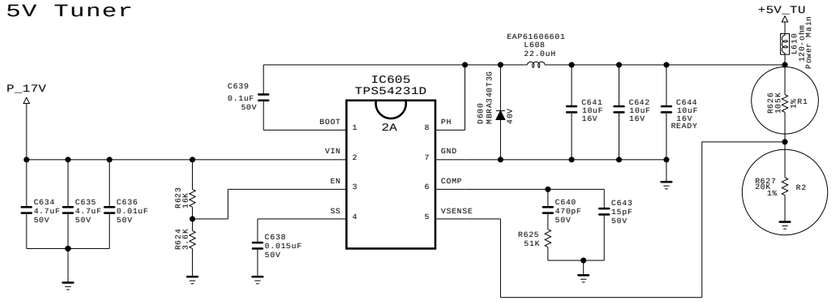

1.26V Tuner

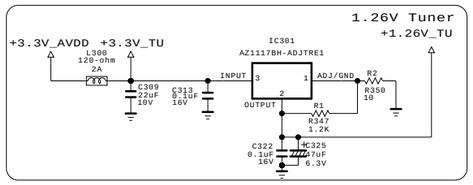

1.5V DDR

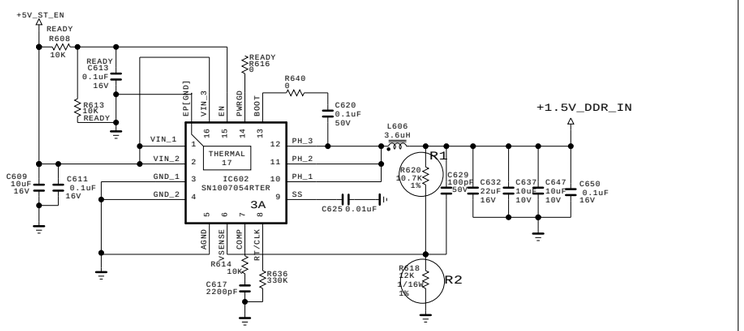

Switching freq: 600K

Vout=0.827*(1+R1/R2)

3.3Vst

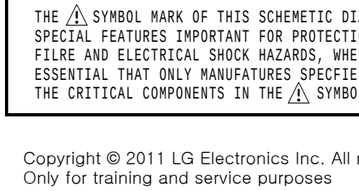

3.3V

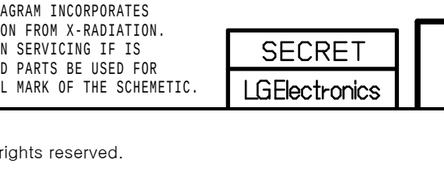

LG8300 1.0V

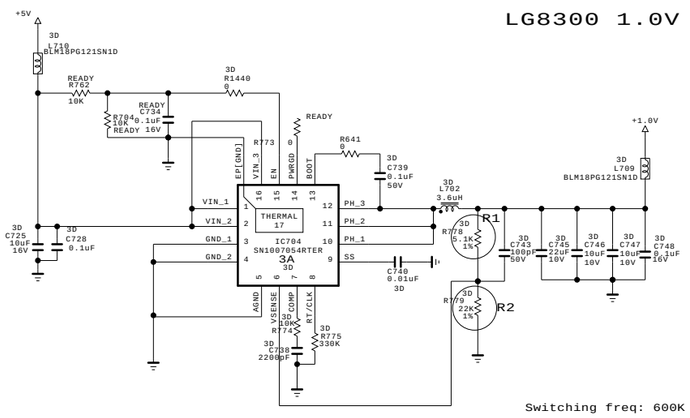

Switching freq: 600K

Vout=0.8*(1+R1/R2)

LG8300 3.3V / 1.8V

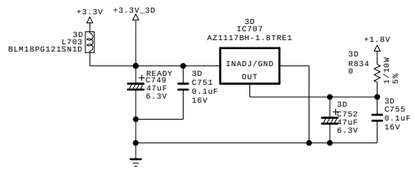

1.8V Control for Power_On Seq of LG8300

SEPARATE GND

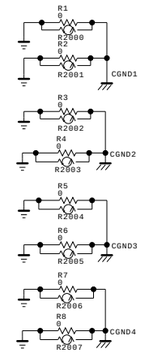

SIDE_HDMI/USB GASKET GND

THE ⚠ SYMBOL MARK OF THIS SCHEMETIC DIAGRAM INCORPORATES SPECIAL FEATURES IMPORTANT FOR PROTECTION FROM X-RADIATION. FILRE AND ELECTRICAL SHOCK HAZARDS, WHEN SERVICING IF IS ESSENTIAL THAT ONLY MANUFATURES SPECFIED PARTS BE USED FOR THE CRITICAL COMPONENTS IN THE ⚠ SYMBOL MARK OF THE SCHEMETIC.

SECRET
LGElectronics

LG ELECTRONICS

MODEL	GP2R_S7R	DATE	2010-08-31
BLOCK	Power	SHEET	6 /

Copyright © 2011 LG Electronics Inc. All rights reserved.
Only for training and service purposes

LGE Internal Use Only

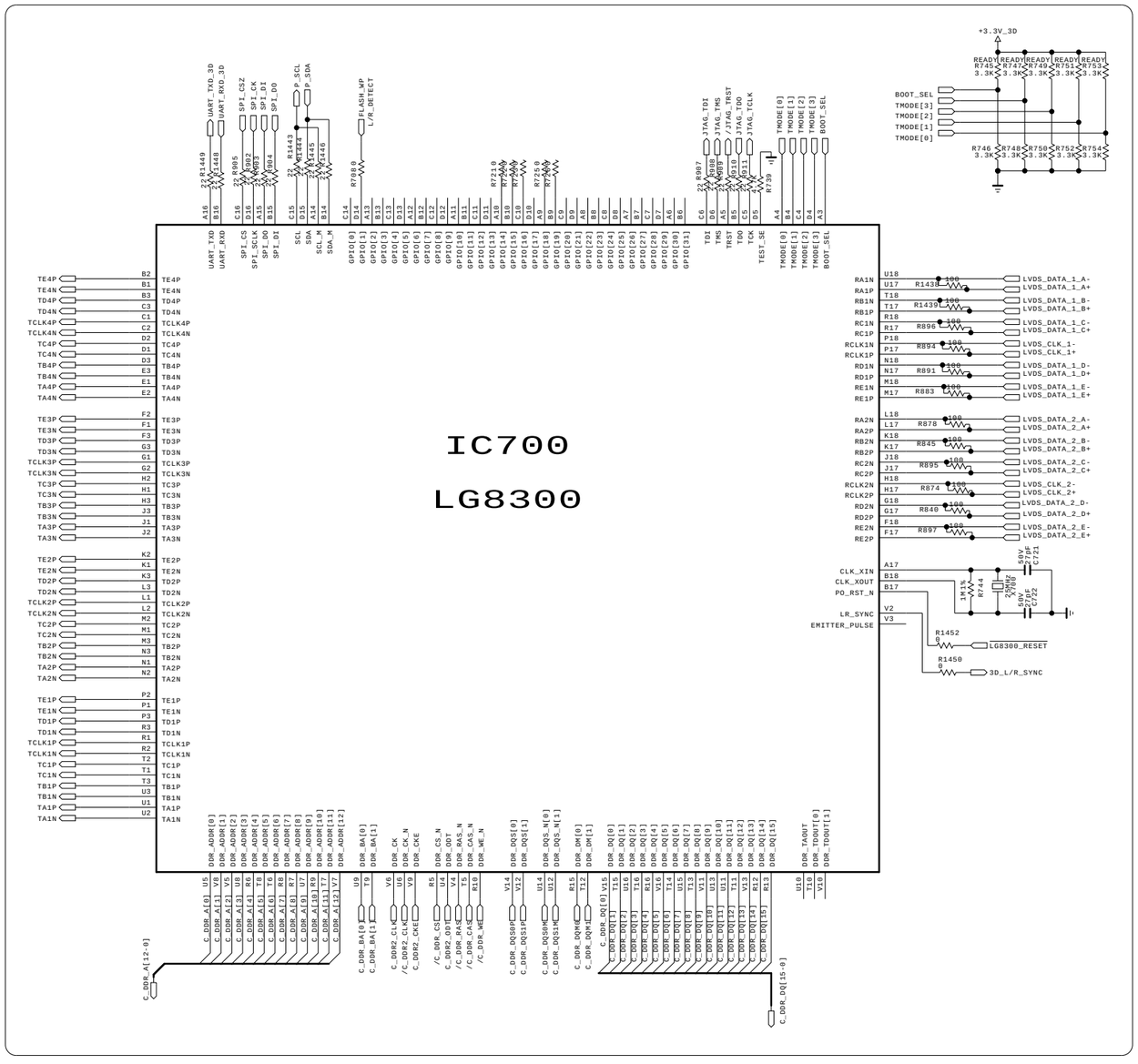

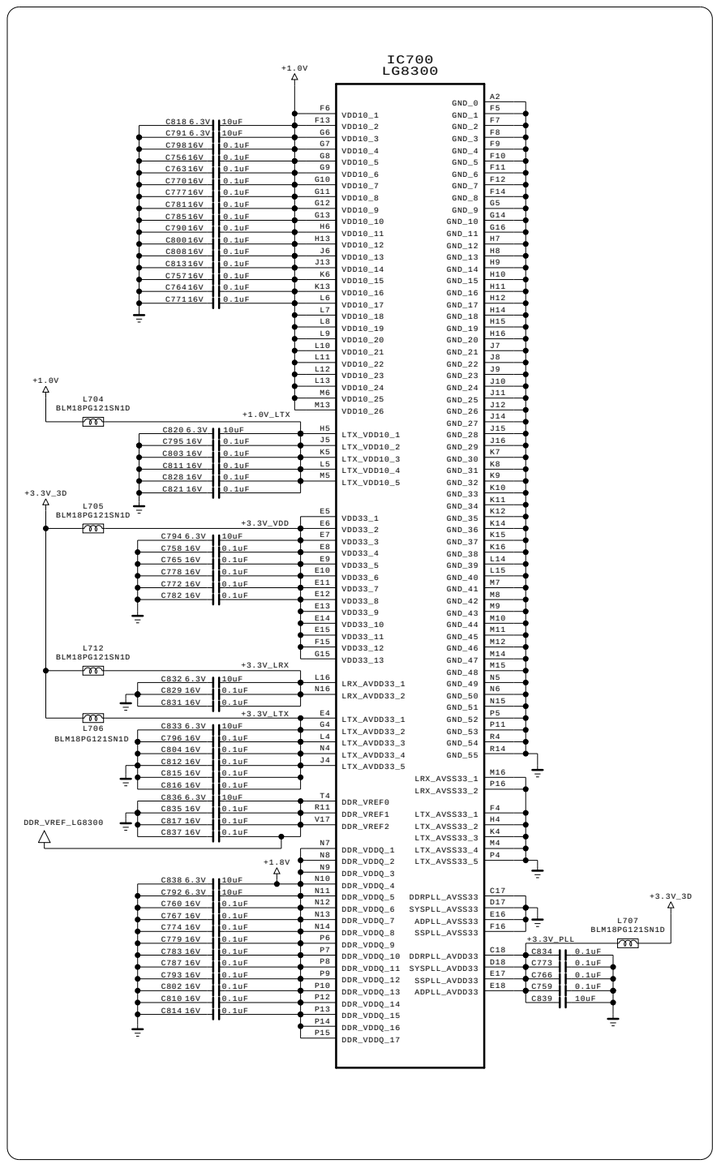

RF Emiter Interface

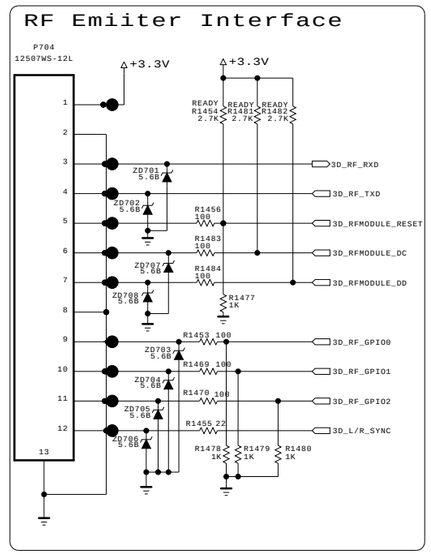

Serial Flash 2MBit

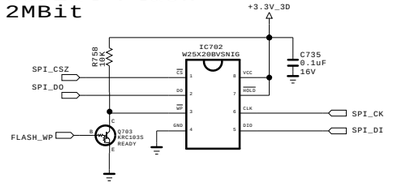

EJTAG

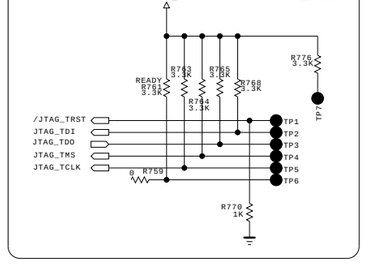

LG8300_RESET

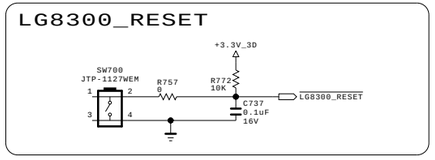

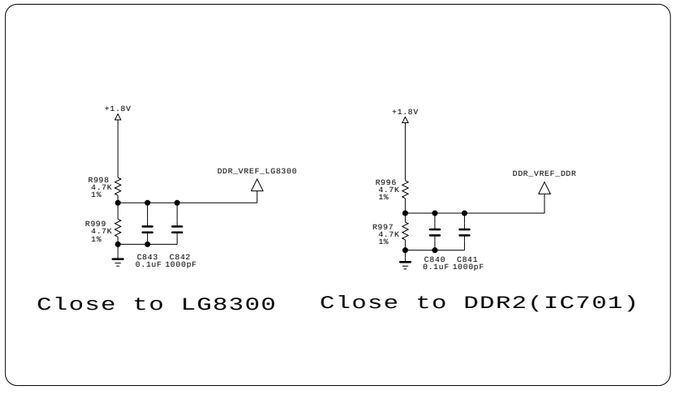

THE ⚠ SYMBOL MARK OF THIS SCHEMETIC DIAGRAM INCORPORATES SPECIAL FEATURES IMPORTANT FOR PROTECTION FROM X-RADIATION. FILRE AND ELECTRICAL SHOCK HAZARDS, WHEN SERVICING IF IS ESSENTIAL THAT ONLY MANUFATURES SPECFIED PARTS BE USED FOR THE CRITICAL COMPONENTS IN THE ⚠ SYMBOL MARK OF THE SCHEMETIC.

SECRET
LGElectronics

LG ELECTRONICS

MODEL	GP2R_S7R	DATE	2010-08-31
BLOCK	3DF	SHEET	7

Copyright © 2011 LG Electronics Inc. All rights reserved.
Only for training and service purposes

LGE Internal Use Only

LG Electronics Inc.

PDP TV Repair Guide

< Applicable Model >
- PD11A/B/L/K

ⓒ LG Electronics. Inc.2010

PDP TV Repair Process Index

No.	Symptom (L)	Symptom (M)	Page	Remark
1	A. Picture Problem	No Picture/Sound OK	1	
2		No Picture/No sound	2	
3		Mal-discharge/Noise/dark picture	3	
4		Picture broken/Freezing	4	
5		Vertical bar/ Horizontal Bar	5	
6	B. Power Problem	No Power (Not turn on)	6	
7		Turn off (Instant, under watching)	7	
8	C. Sound Problem	No sound/ Sound distortion	8	
9	E. General function Problem	Remote control & Local Key checking	9	
10		RF emitter checking	10	

First of all, Check whether there is SVC Bulletin in GCSC System for these model.

ⓒ LG Electronics. Inc.2010

Repair Process

PDP TV	Symptom	A. Picture Problem	Making	2010. 11. 16	전자 - 6-2
		No Picture/Sound OK	Revision		1/10

First of all, Check whether all of cable between board was inserted properly or not.
(Main B/D ↔ Power B/D, Power B/D ↔ Y-sus B/D, Power B/D ↔ Z-Sus B/D(for 60Inch), LVDS Cable, Speaker Cable, IR B/D Cable)

☞A1
Check Module pattern by using "TILT" key on SVC R/C

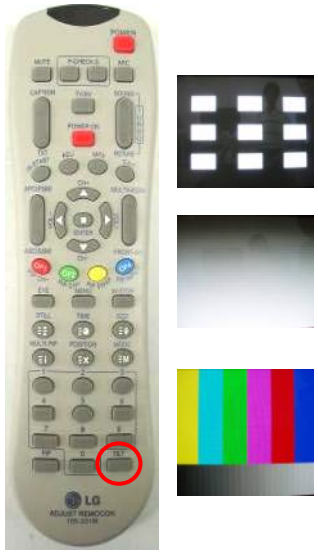

<SVC R/C & Pattern>

Normal Y → ☞A2 Check Sound → **Sound OK** Y → Check LVDS Cable → **Normal** Y → Close

Sound OK N → Move No Picture/No sound Section

Normal N → ☞A3 Check Vs, Va → **Normal** Y → ☞A5~A6 Check voltage . -VY . VSC . VZB → **Normal** Y → ☞A12 Check B+ Voltage on Power Board / Control Board .Check B+(5V) → **Normal** Y → ☞A13 1.Check Control Board . LED on . Crystal(X2), 3.3V, 5V . Rom update 2.Replace Control B/D

Normal N → Move Power problem Section

☞A8~A11 1. Check Y-Sus/ Z-Sus Board 2. Replace defective B/D

Normal N → Move Power problem Section

※Refer to the Module label for each voltage ☞A4

-VY VSC VZB

Close → Replace Main B/D

ⓒ LG Electronics. Inc.2010

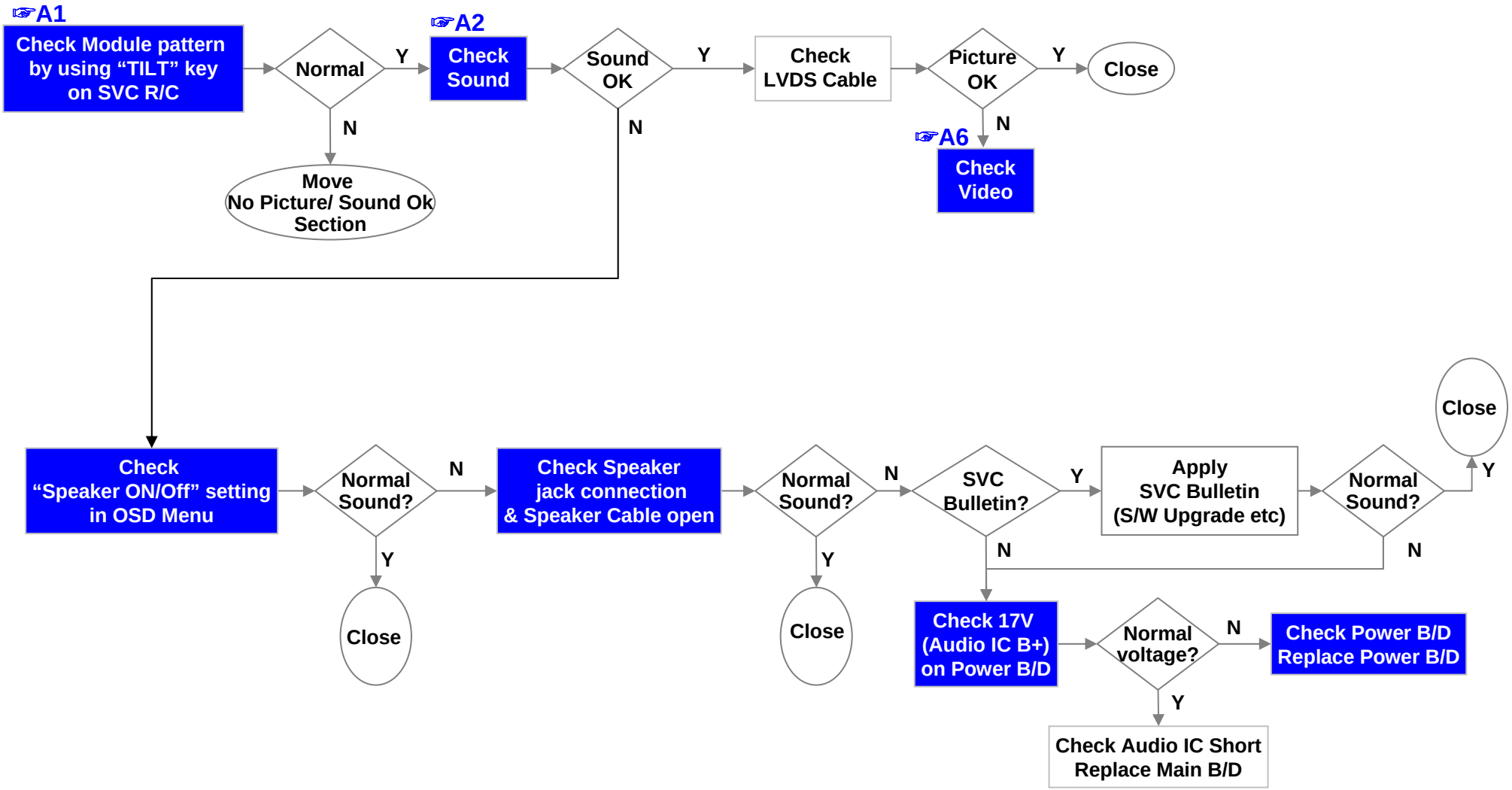

ⓒ LG Electronics. Inc.2010

Repair Process

PDP TV	Symptom	A. Picture Problem	Making	2010. 11. 16	전자 - 6-2
		Mal-discharge/Noise/dark picture	Revision		3/10

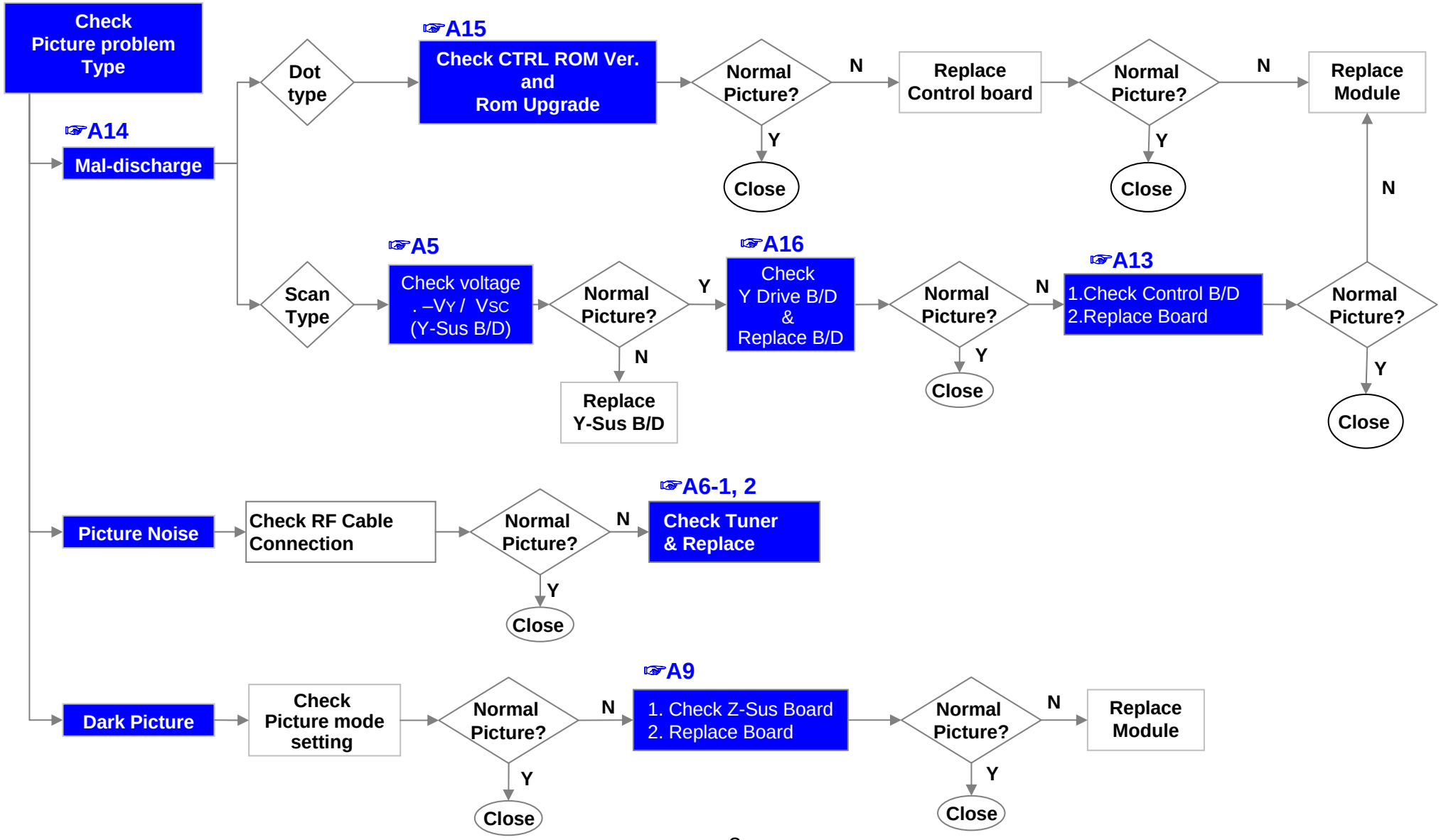

ⓒ LG Electronics. Inc.2010

Repair Process

PDP TV	Symptom	A. Picture Problem	Making	2010. 11. 16	전자 - 6-2
		Picture broken/Freezing	Revision		4/10

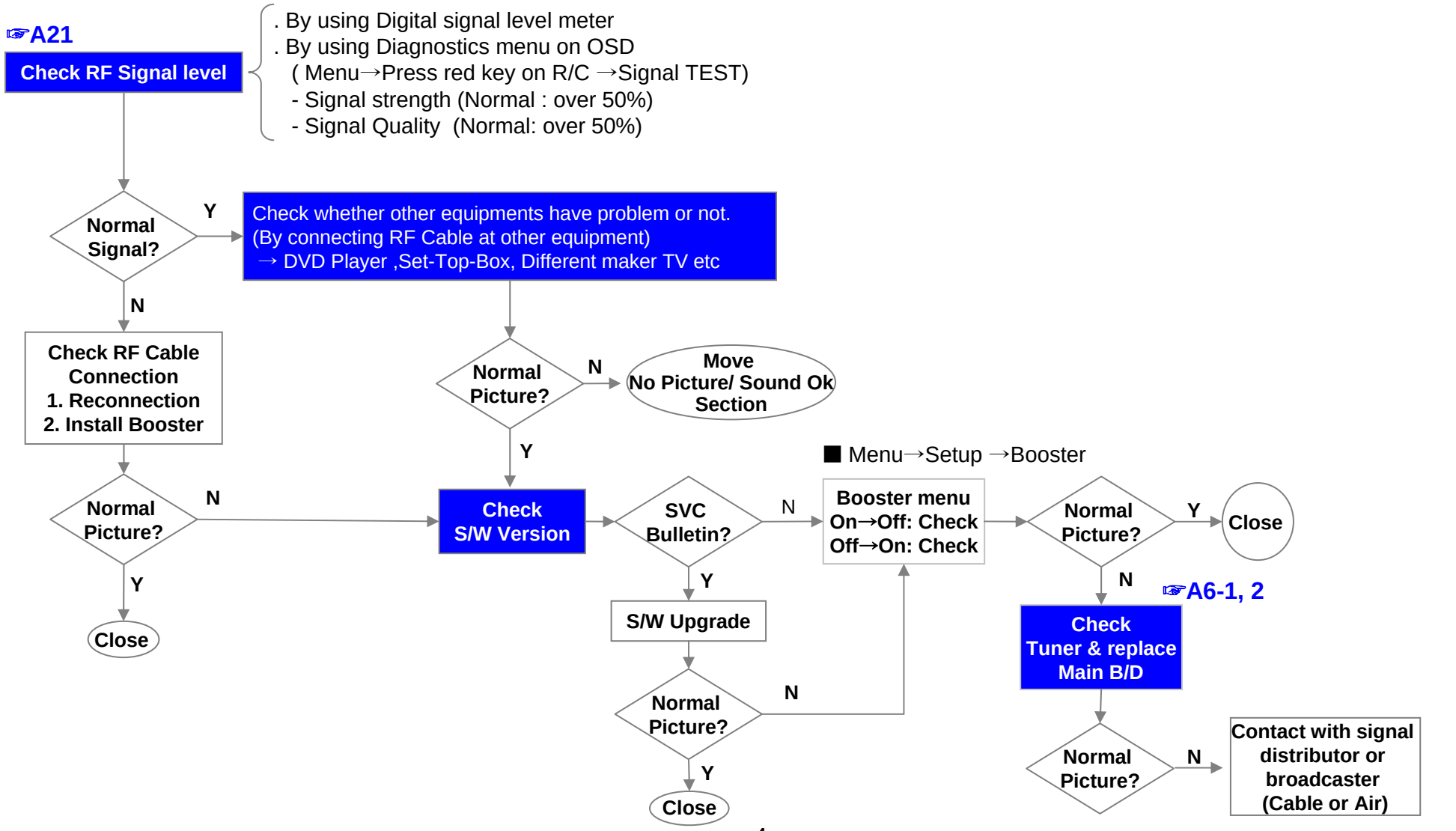

ⓒ LG Electronics. Inc.2010

Repair Process

PDP TV	Symptom	A. Picture Problem	Making	2010. 11. 16	전자 - 6-2
		Vertical bar/ Horizontal Bar	Revision		5/10

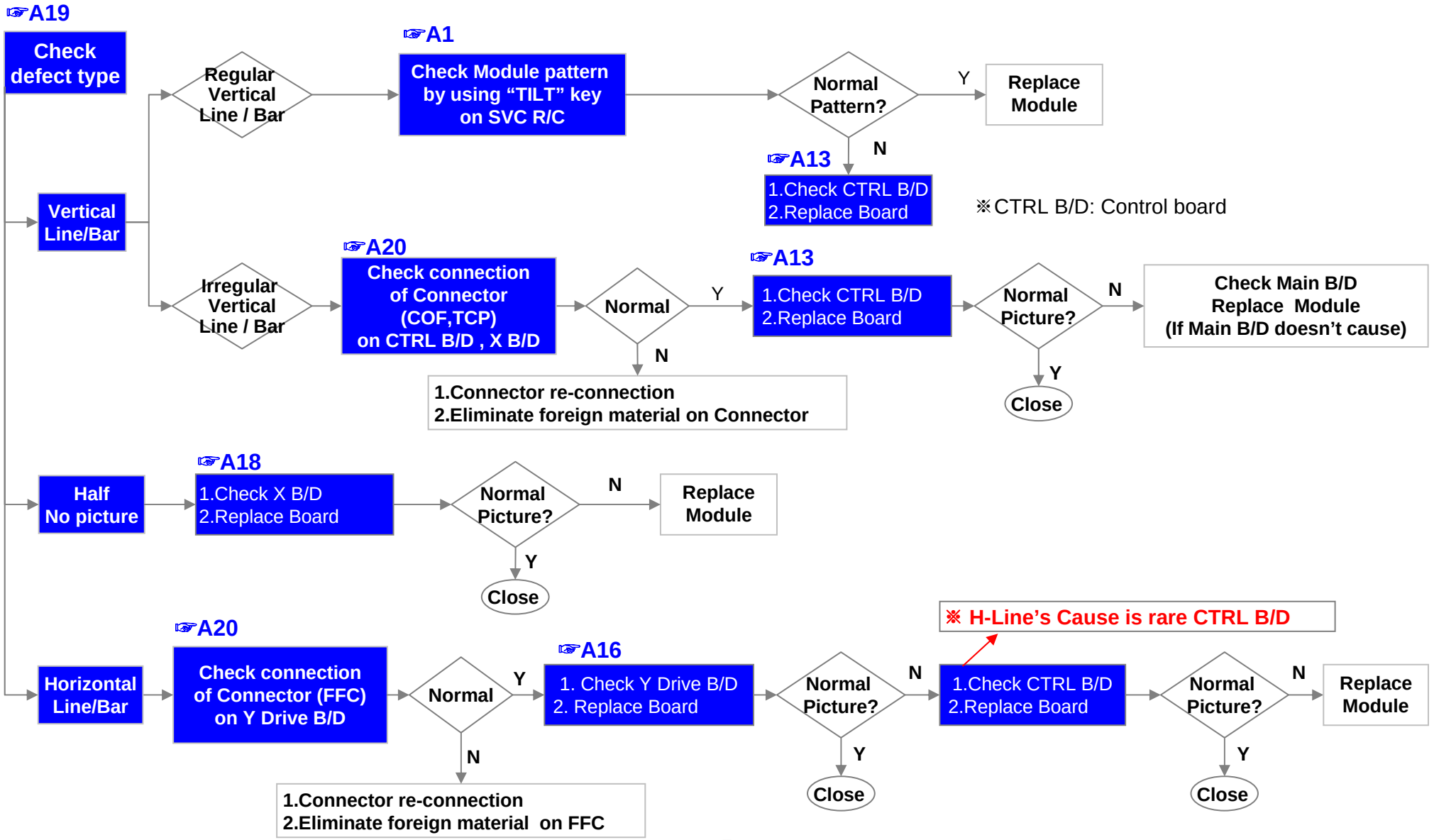

ⓒ LG Electronics. Inc.2010

Repair Process

PDP TV	Symptom	B. Power Problem	Making	2010. 11. 16	전자 - 6-2
		No Power (Not turn on)	Revision		6/10

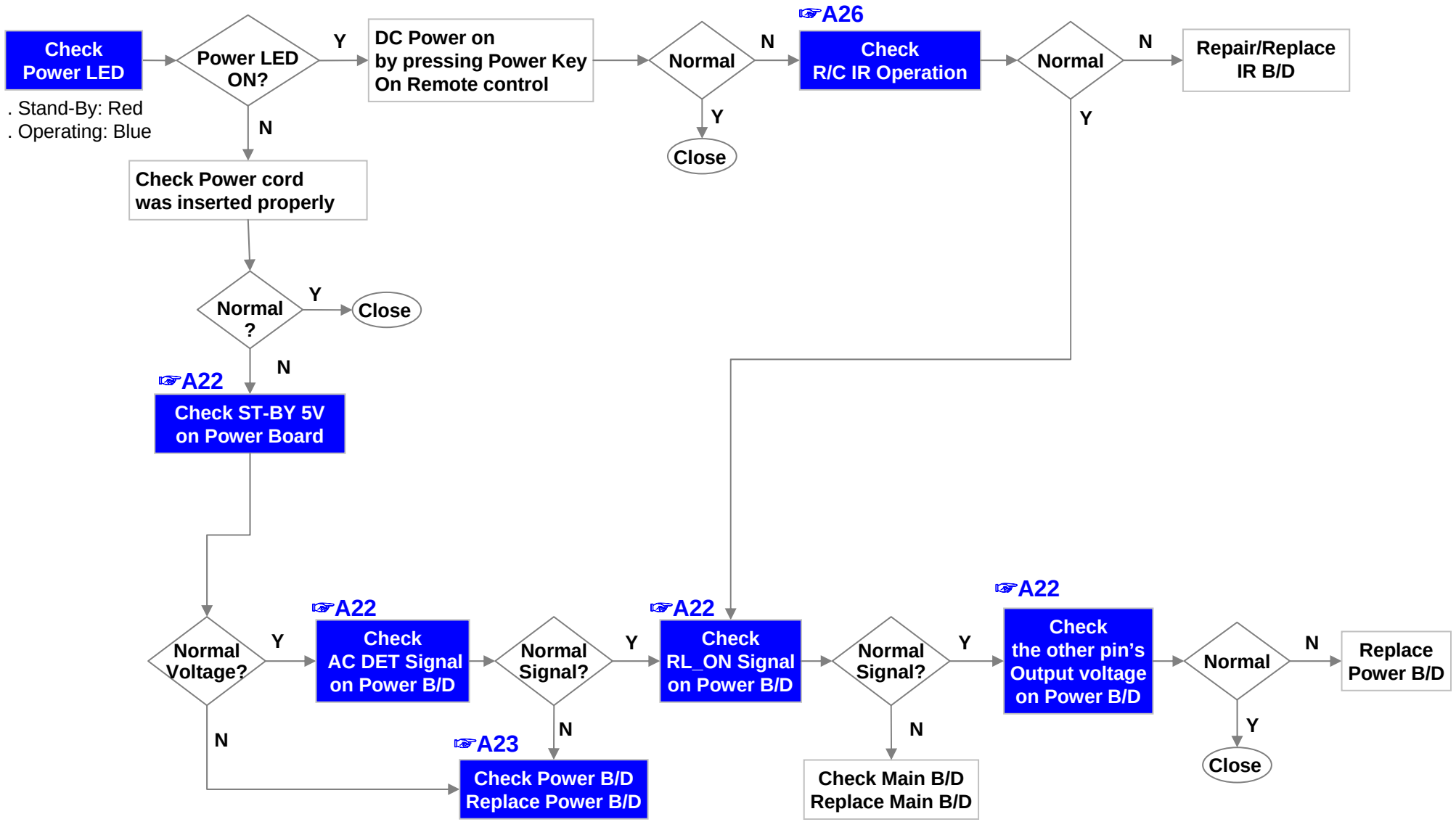

ⓒ LG Electronics. Inc.2010

※ To check Power B/D Protection

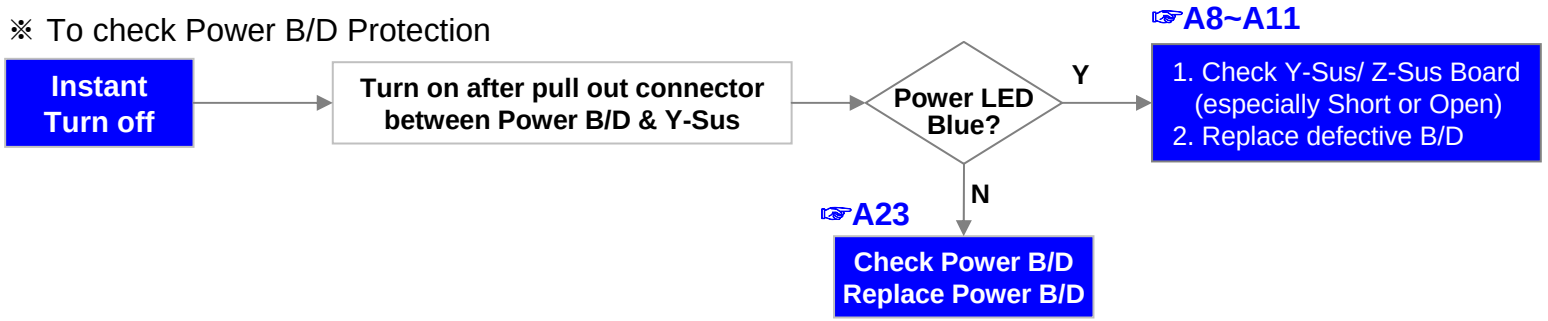

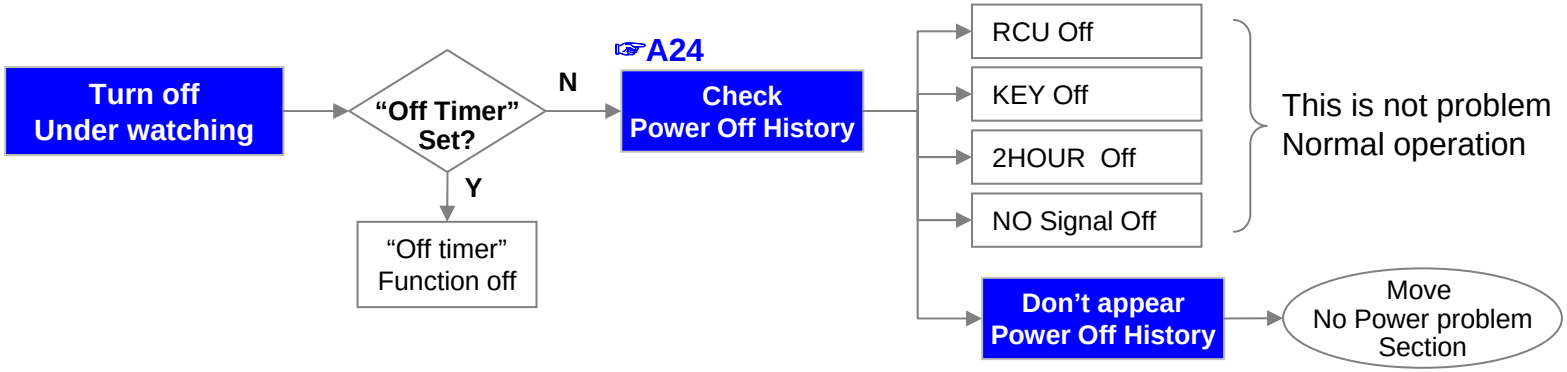

ⓒ LG Electronics. Inc.2010

Repair Process

1.No sound(If HDMI Input only have no sound, upload EDID data)

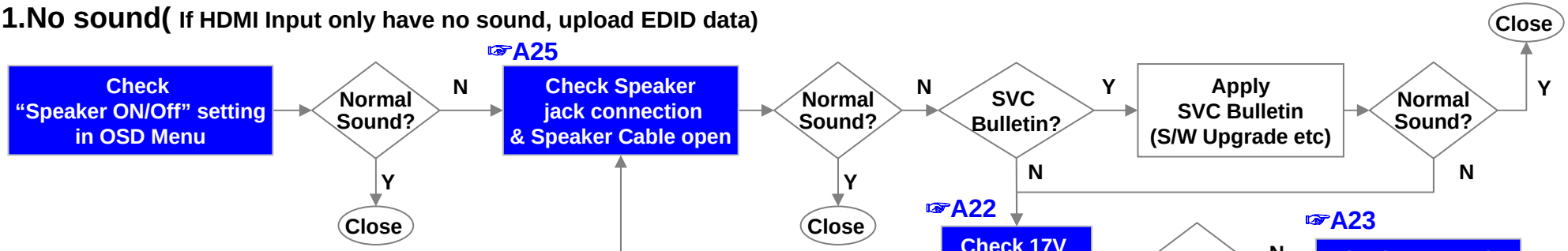

2.Sound distortion & sound drop

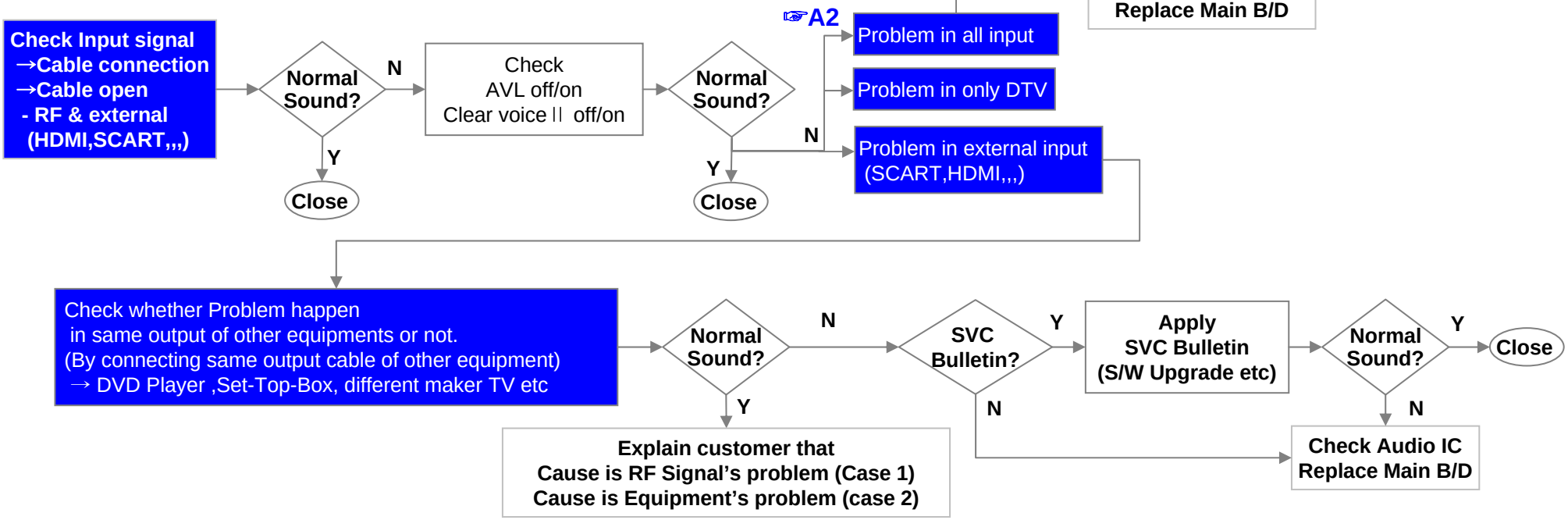

ⓒ LG Electronics. Inc.2010

1. Remote controller (R/C) operating error

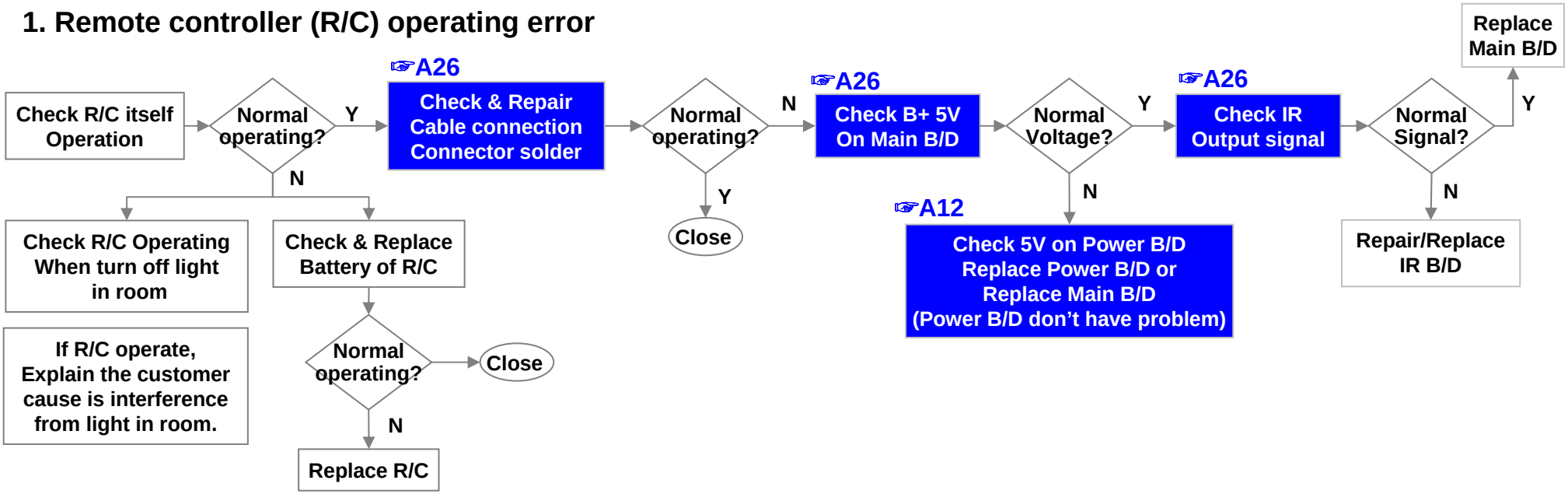

2. Local KEY operating error

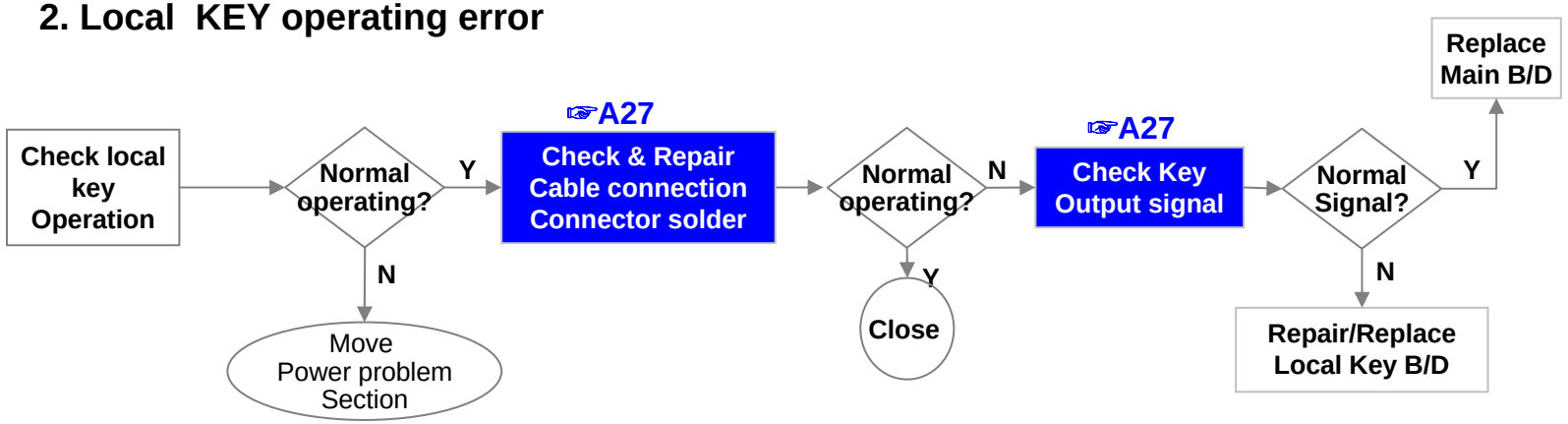

ⓒ LG Electronics. Inc.2010

3. RF emitter operating error

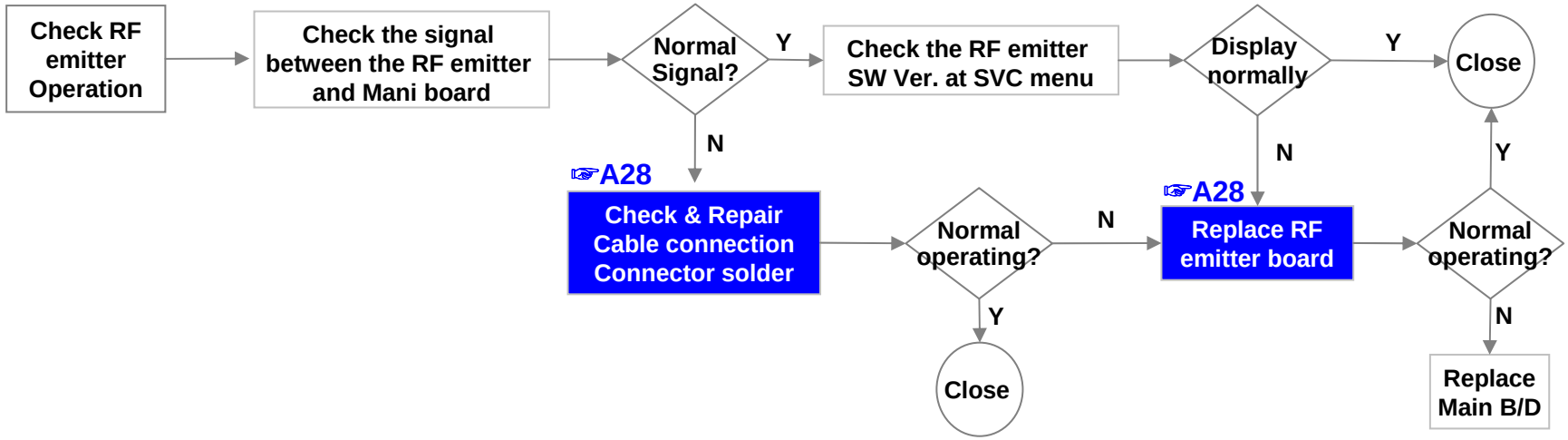

ⓒ LG Electronics. Inc.2010

PDP TV Repair Process Reference data Index

No.	Symptom	Detail	Page	Remark
1		**Check Module pattern by Tilt key**	A1	
2		**Audio check method**	A2	
3		**Check Va, Vs on Power Board**	A3	
4		**PDP Module Label Information**	A4	
5		**Check & Adjust –VY,VSC,VZB voltage - 50R3 –VY,VSC(Y-Sus) / VZB(Z-Sus)**	A5	
6		**Video Check Method**	A6	
6	**Picture Problem**	**Fuse Checking Method**	A7	
7		**Y-Sus Board Checking Method(50R3)**	A8	
8		**Z-Sus Board Checking Method(50R3)**	A9	
11		**Check 5V on Power B/D**	A12	
12		**Control Board Checking Method(50R3)**	A13	
13		**Mal discharge Symptom Picture**	A14	
14		**PDP Module Rom Ver. Checking method**	A15	
15		**Y Drive B/D Checking method**	A16	
17		**(Half picture) X- B/D Checking method(50R3)**	A18	

Next page Continued

ⓒ LG Electronics. Inc.2010

PDP TV Repair Process Reference data Index

No.	Symptom	Detail	Page	Remark
18	Picture Problem	Defect type cause by PDP Module	A19	
19		Connector Type on PDP Module	A20	
20		RF Signal level Checking method	A21	
21	Power Problem	Check voltage on Power board	A22	
22		Power board Checking Method	A23	
23		Check Power off History	A24	
24	Sound Problem	Speaker cable checking method	A25	
25	General Function Problem	Check Remote control IR operation	A26	
26		Check Local Key operation	A27	
27		Check RF emitter operation	A28	

ⓒ LG Electronics. Inc.2010

Repair Process-Reference data

PDP TV	Symptom	A. Picture Problem	Making	2010. 11. 16	전자 - 6-2
	Item	Check Module pattern by Tilt key	Revision		A1

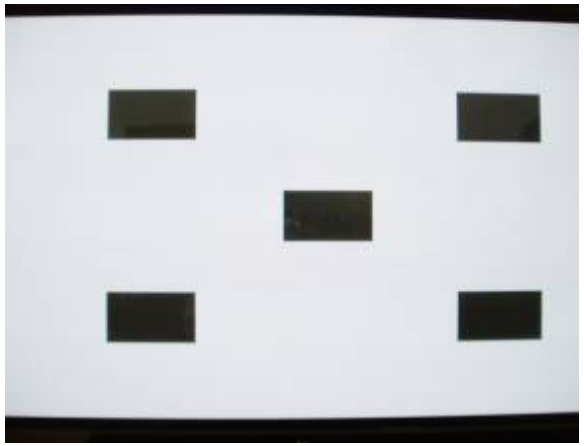

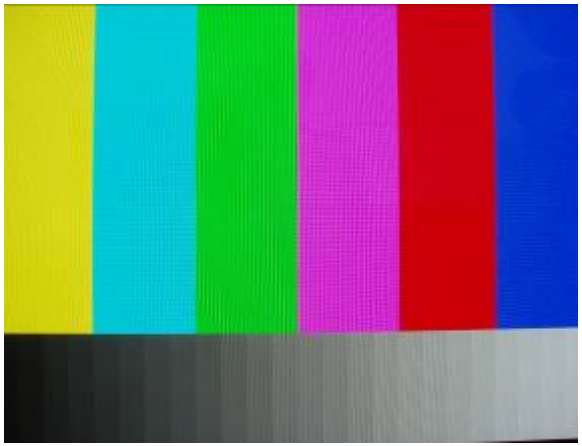

You can see 20 types patterns by using TILT Key on SVC Remote controller (except Old model)

< CHECK Item >

1. Dead pixel 2.Image sticking 3.Mal discharge 4.Module defect (V-Line/Bar, H-Line/Bar,,,)

5. In case of no picture, you can judge defect cause (Module or Main B/D)

- If patterns appear, defect cause is Main B/D

ⓒ LG Electronics. Inc.2010

PDP TV	Symptom	A. Picture Problem	Making	2010. 11. 16	전자 - 6-2
		Audio check method	Revision		A2

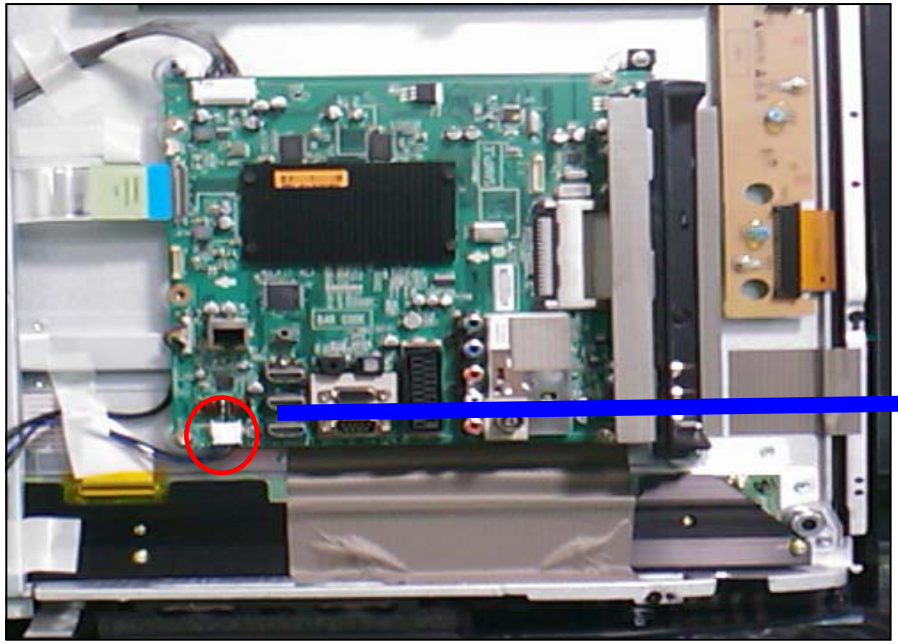

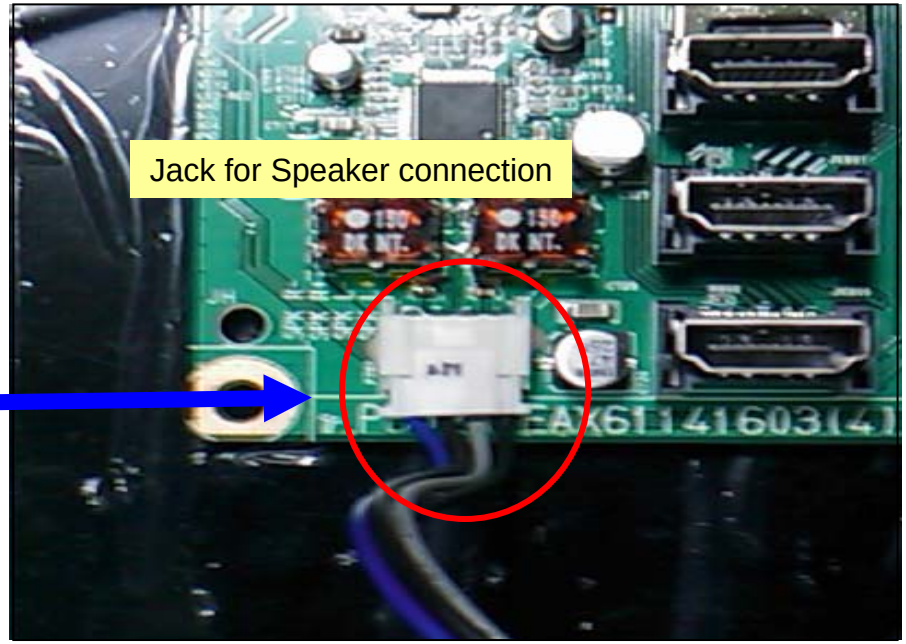

1.Check Audio output by using oscilloscope
GND ↔ R- or R+ or L- or L+

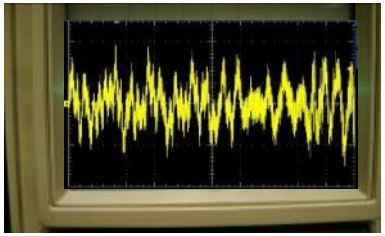

Audio output waveform

2.Check whether speaker jack was inserted properly or not.

ⓒ LG Electronics. Inc.2010

Repair Process-Reference data

PDP TV	Input Block	All Input Audio Problem	Making	2010. 11. 16	전자 - 6-2
			Revision		A2-1

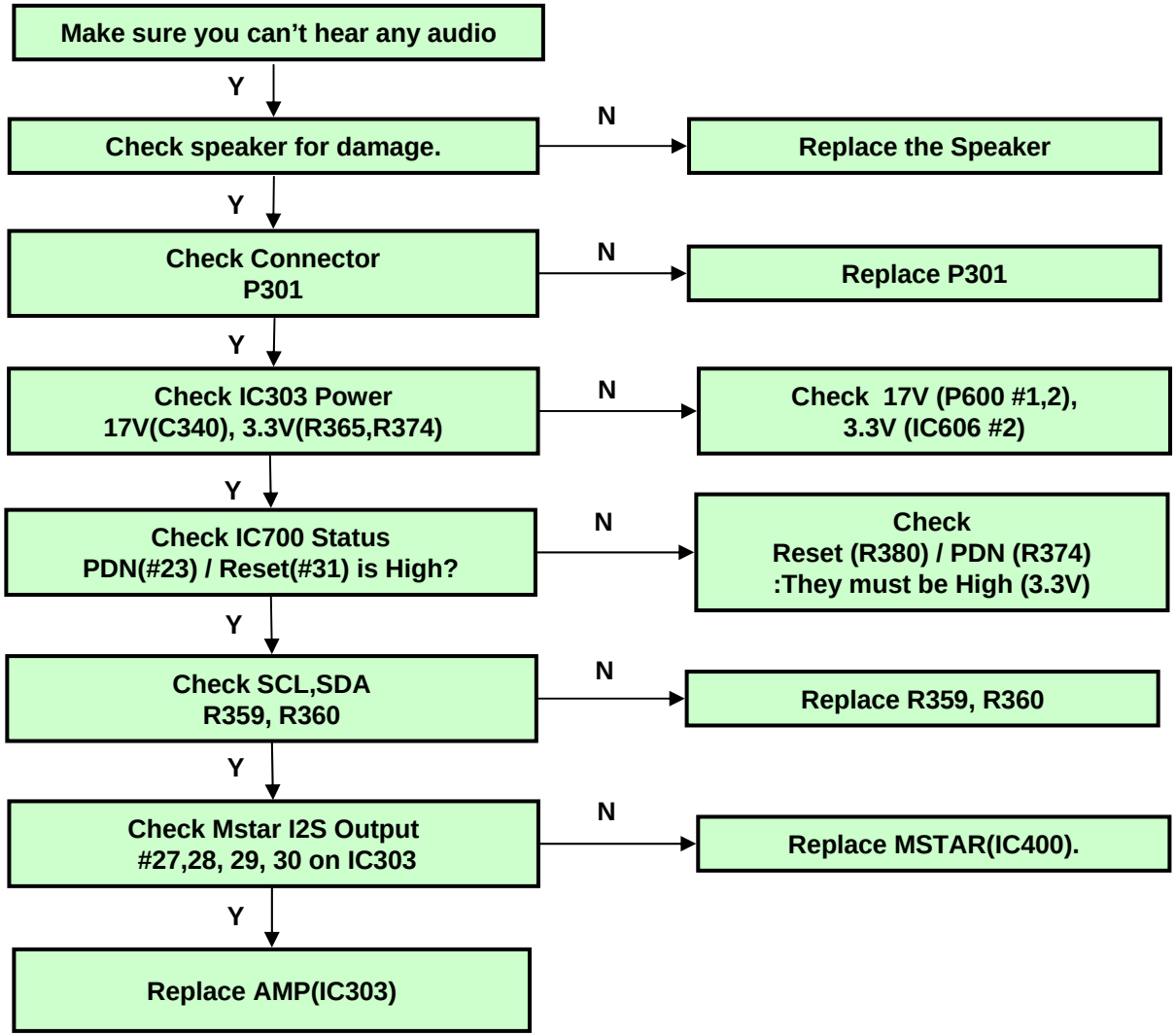

ⓒ LG Electronics. Inc.2010

Repair Process-Reference data

PDP TV	Input Block	Digital TV / HDMI Audio Problem	Making	2010. 11. 16	전자 - 6-2
			Revision		A2-2

◆ Digital TV

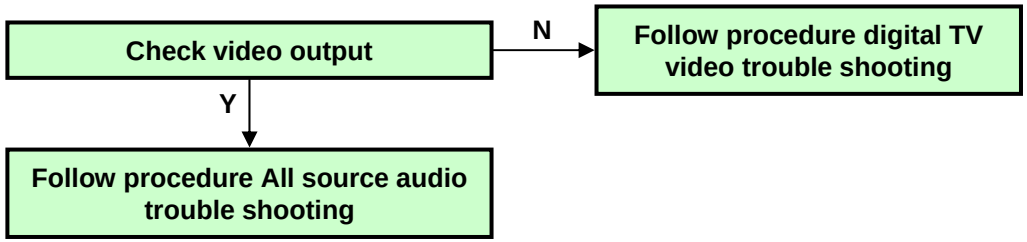

◆ HDMI

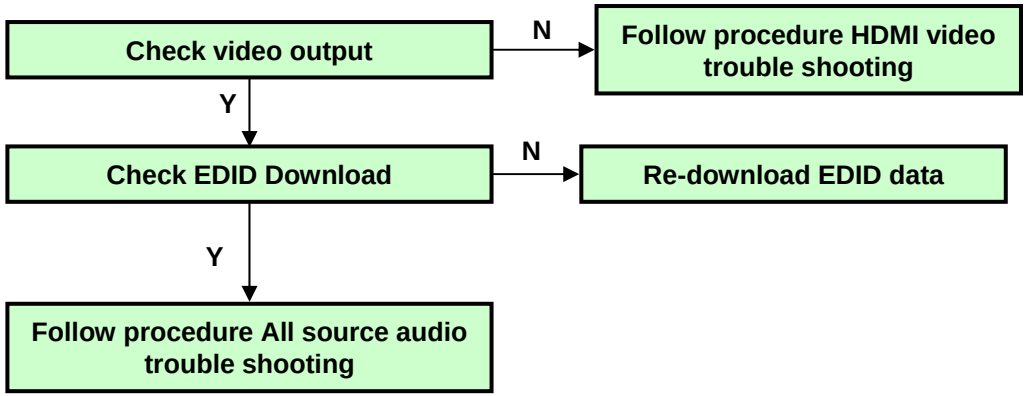

ⓒ LG Electronics. Inc.2010

Repair Process-Reference data

PDP TV	Input Block	Analog TV Audio Problem	Making	2010. 11. 16	전자 - 6-2
			Revision		A2-3

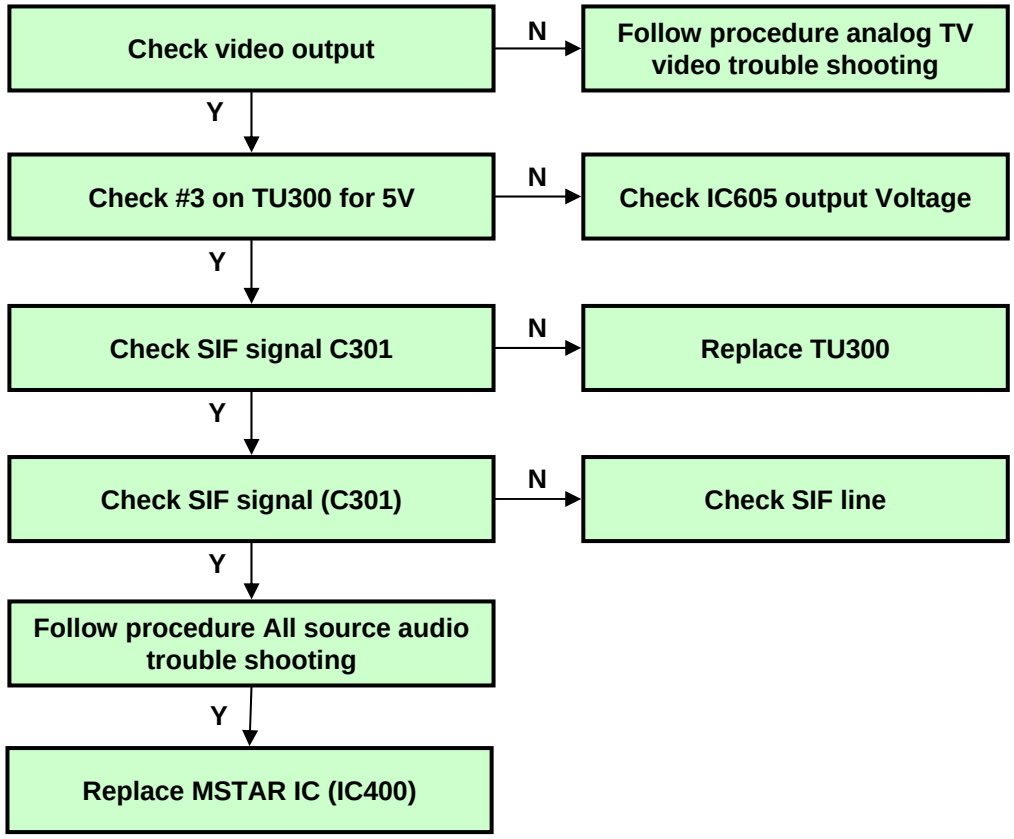

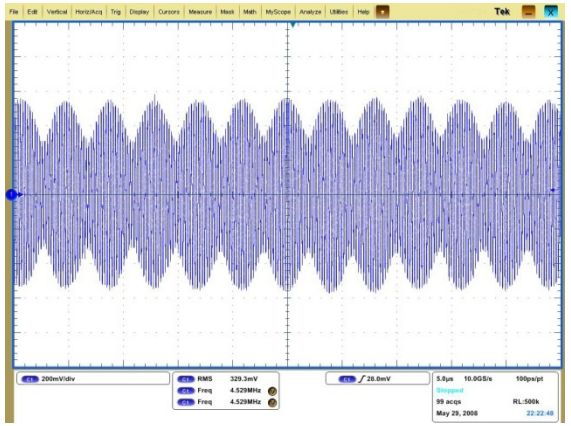

< SIF waveform – sample >
- Defend on the input signal.

ⓒ LG Electronics. Inc.2010

Repair Process-Reference data

PDP TV	Input Block	Component / AV/RGB Audio Problem	Making	2010. 11. 16	전자 - 6-2
			Revision		A2-4

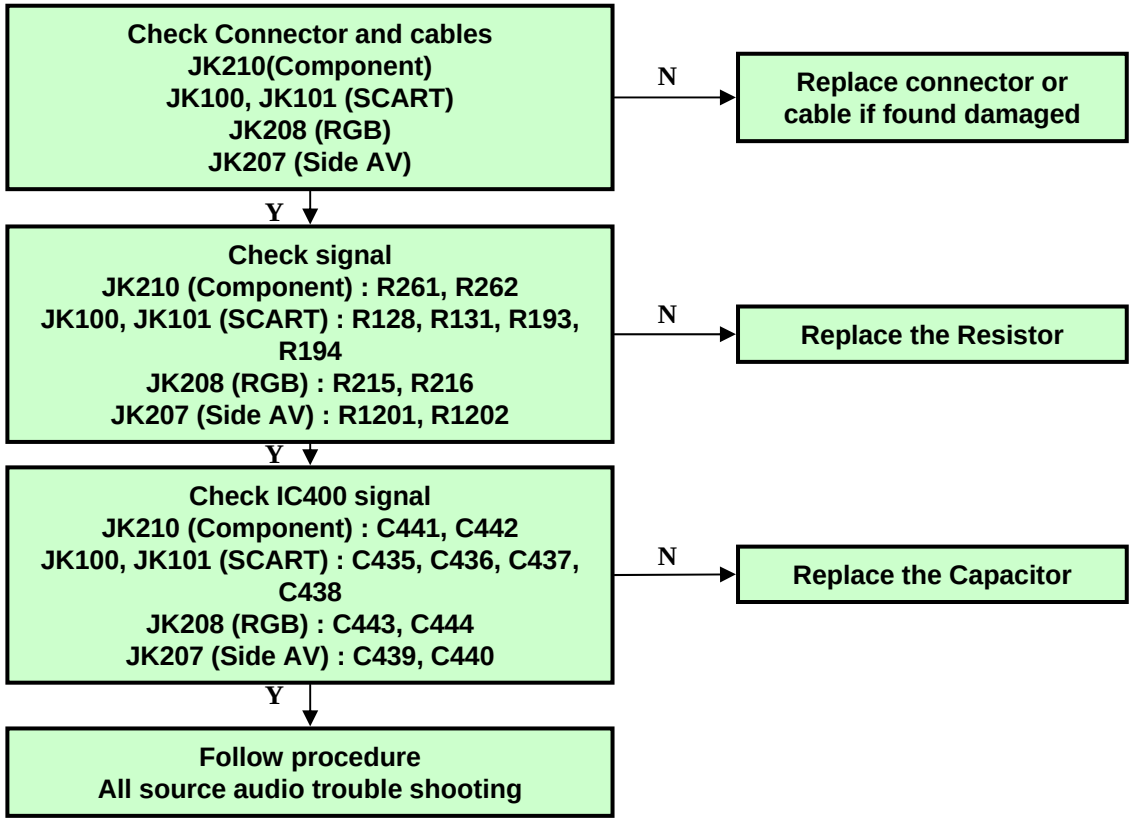

ⓒ LG Electronics. Inc.2010

Repair Process-Reference data

PDP TV	Input Block	Optical Audio Problem	Making	2010. 11. 16	전자 - 6-2
			Revision		A2-5

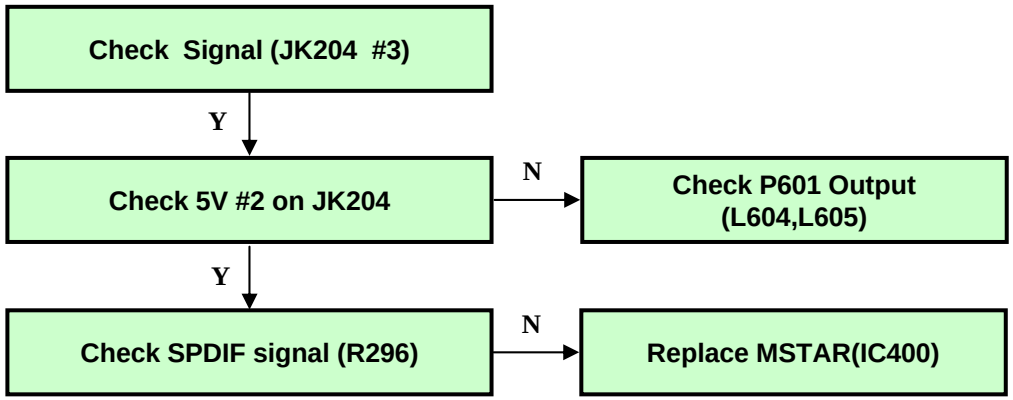

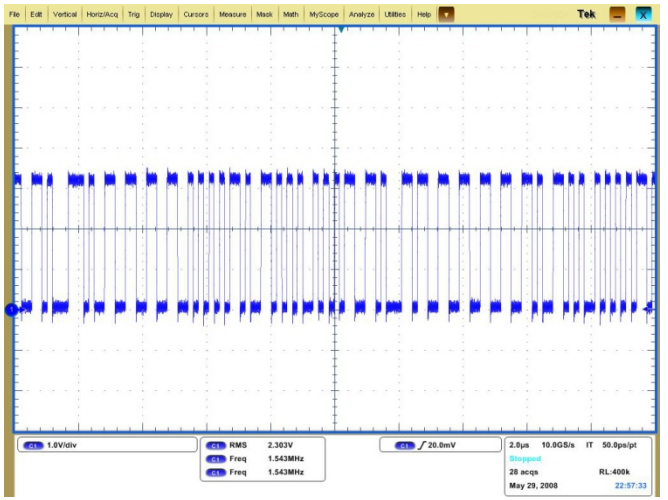

< SPDIF waveform – sample >
- Defend on the input signal.

ⓒ LG Electronics. Inc.2010

Repair Process-Reference data

PDP TV	Symptom	A. Picture Problem	Making	2010. 11. 16	전자 - 6-2
		Check Va, Vs on Power Board	Revision		A3

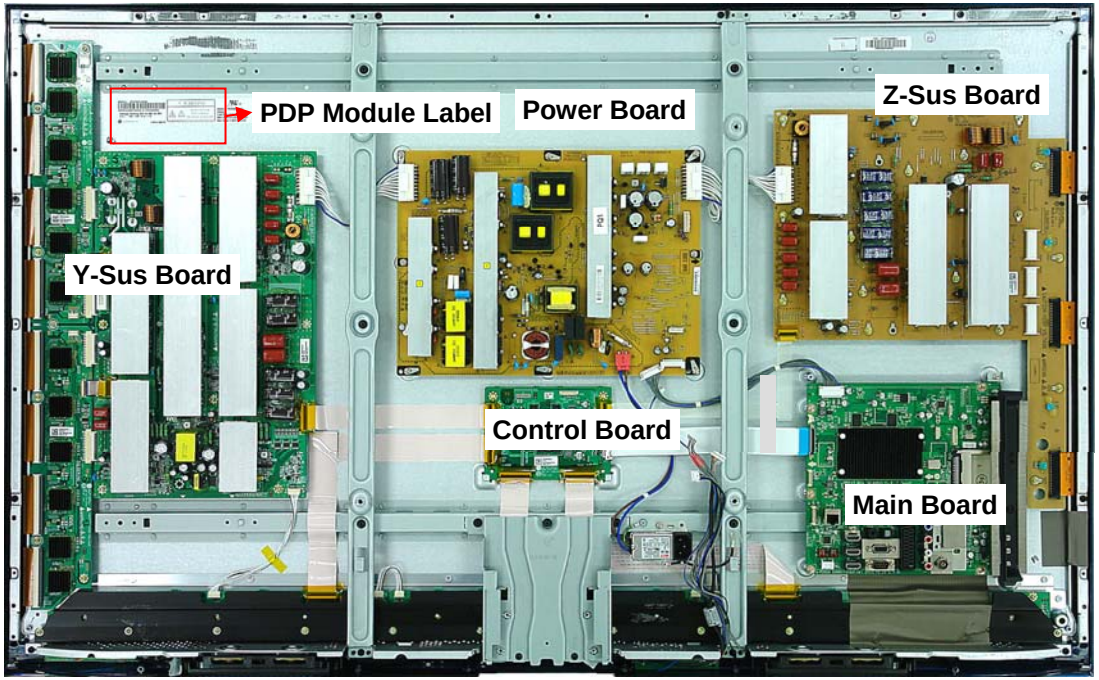

▶ **Check Va & Adjust Va Voltage**
(Refer to the Module label for Va specification)

▶ **Check Vs & Adjust Vs Voltage**
(Refer to the Module label for Vs specification)

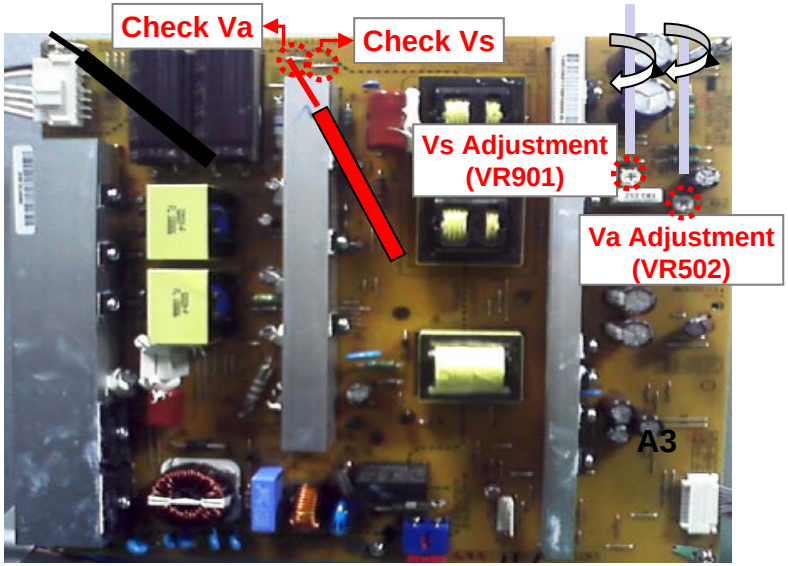

ⓒ LG Electronics. Inc.2010

PDP TV	Symptom	A. Picture Problem	Making	2010. 11. 16	전자 - 6-2
		PDP Module Label Information	Revision		A4

PDP Module Label Information.

① Model Name

② Bar Code
(Code 128, Contains the manugacture No.)

③ Manugacture No.

④ Adjusting Voltage(DC Va, Vs)

⑤ Adjusting Voltage (Set up/-Vy/Vsc/Ve/Vzb)

⑥ The trade name of LG Electronics

⑦ Manufactured date(Year & Month)

⑧ Warning

⑨ UL Approval Mark

⑩ UL Approval No.

⑪ Model Name

⑫ Max. Watt

⑬ Max. Volts

⑭ Max. Amps

ⓒ LG Electronics. Inc.2010

Repair Process-Reference data

PDP TV	Symptom	A. Picture Problem	Making	2010. 11. 16	전자 - 6-2
		Check & Adjust –V_Y,V_{SC},V_{ZB} voltage(50R3)	Revision		A5

Voltage Check & Adjustment : 50R3

<Module Label>

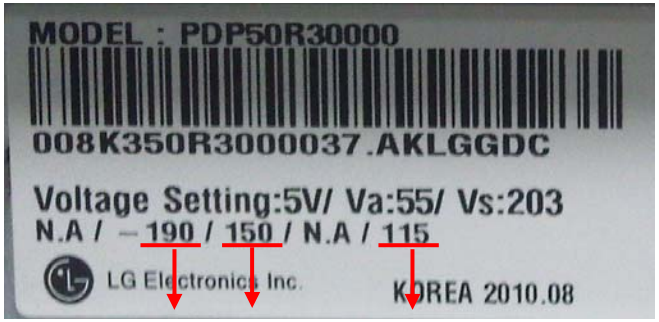

YSUS board

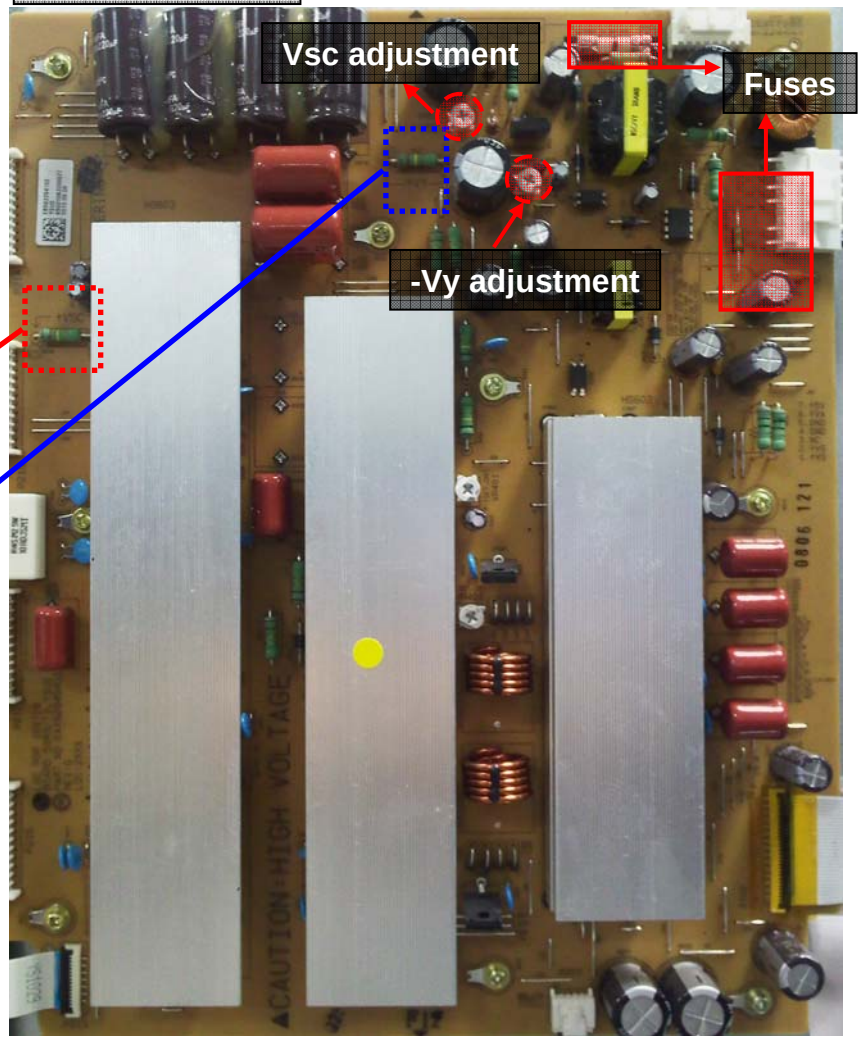

1. Vsc (150V) on Y-Sus B/D
   - Check Point: R324
   - Adjustment Point: VR301

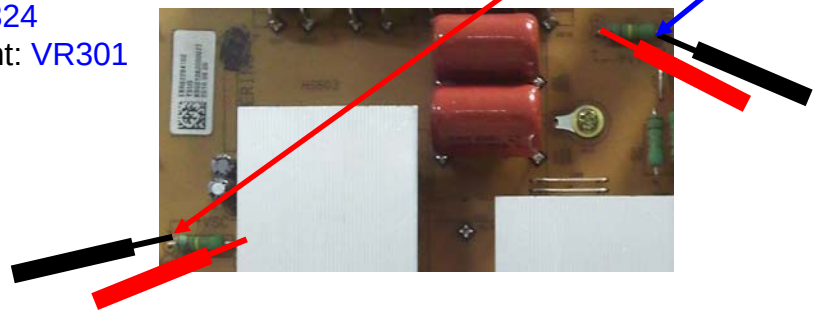

2. -Vy (-190V) on Y-Sus B/D
   - Check Point: R334
   - Adjustment Point: VR302

ⓒ LG Electronics. Inc.2010

PDP TV	Symptom	A. Picture Problem	Making	2010. 11. 16	전자 - 6-2
		Check & Adjust –V_Y,V_{SC},V_{ZB} voltage(50R3)	Revision		A5

Voltage Check & Adjustment : 50R3

<Module Label>

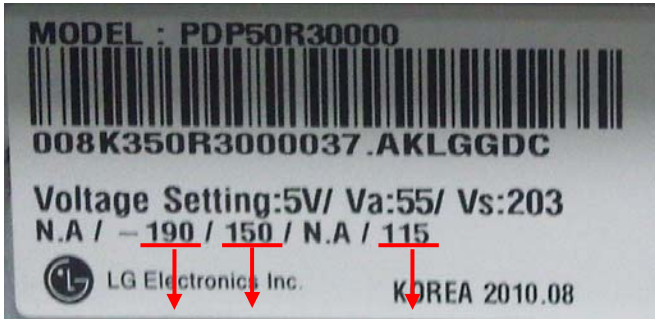

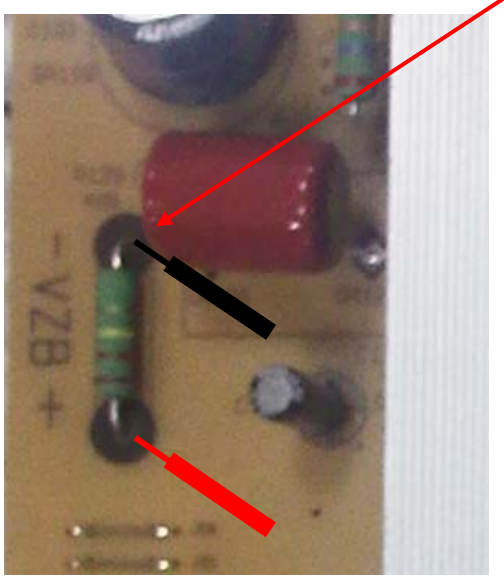

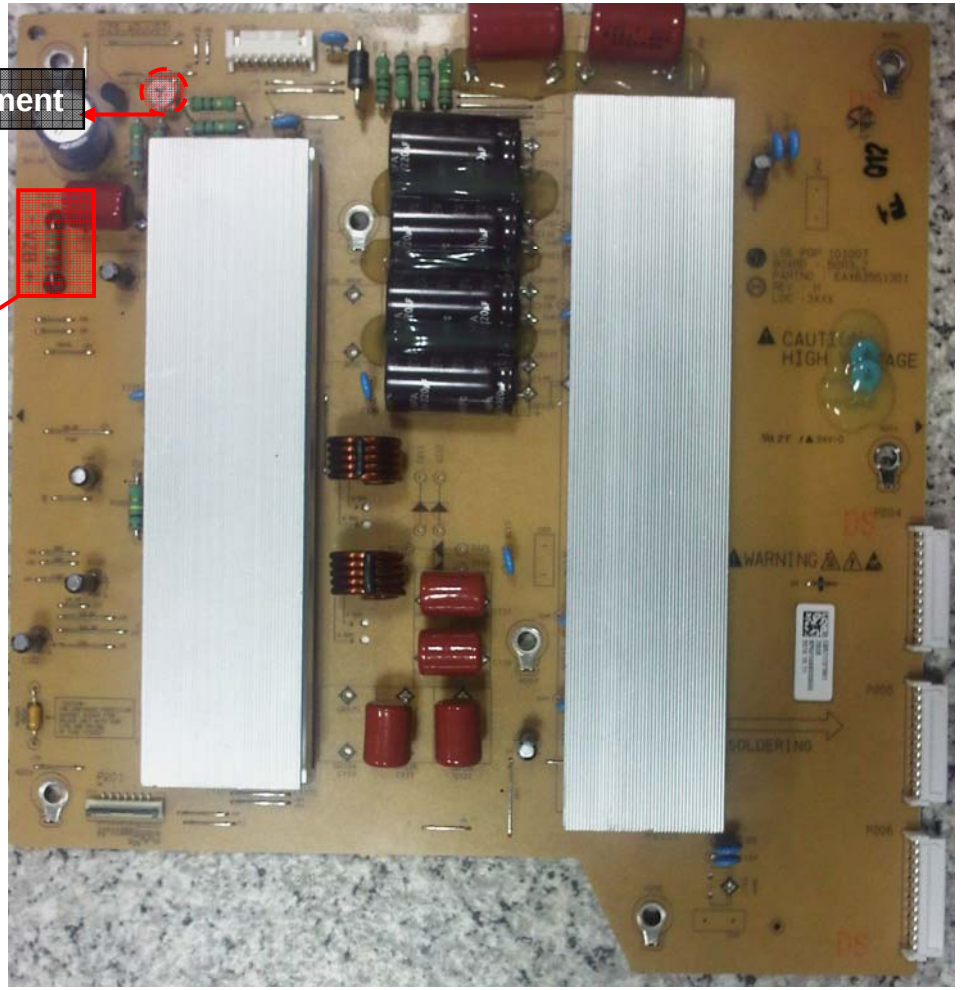

3. VZB (115V) on Z-Sus B/D
   . Check Point: **R156**
   - Adjustment Point: VR204

ⓒ LG Electronics. Inc.2010

PDP TV	Input Block	Digital TV Video Problem	Making	2010. 11. 16	전자 - 6-2
			Revision		A6-1

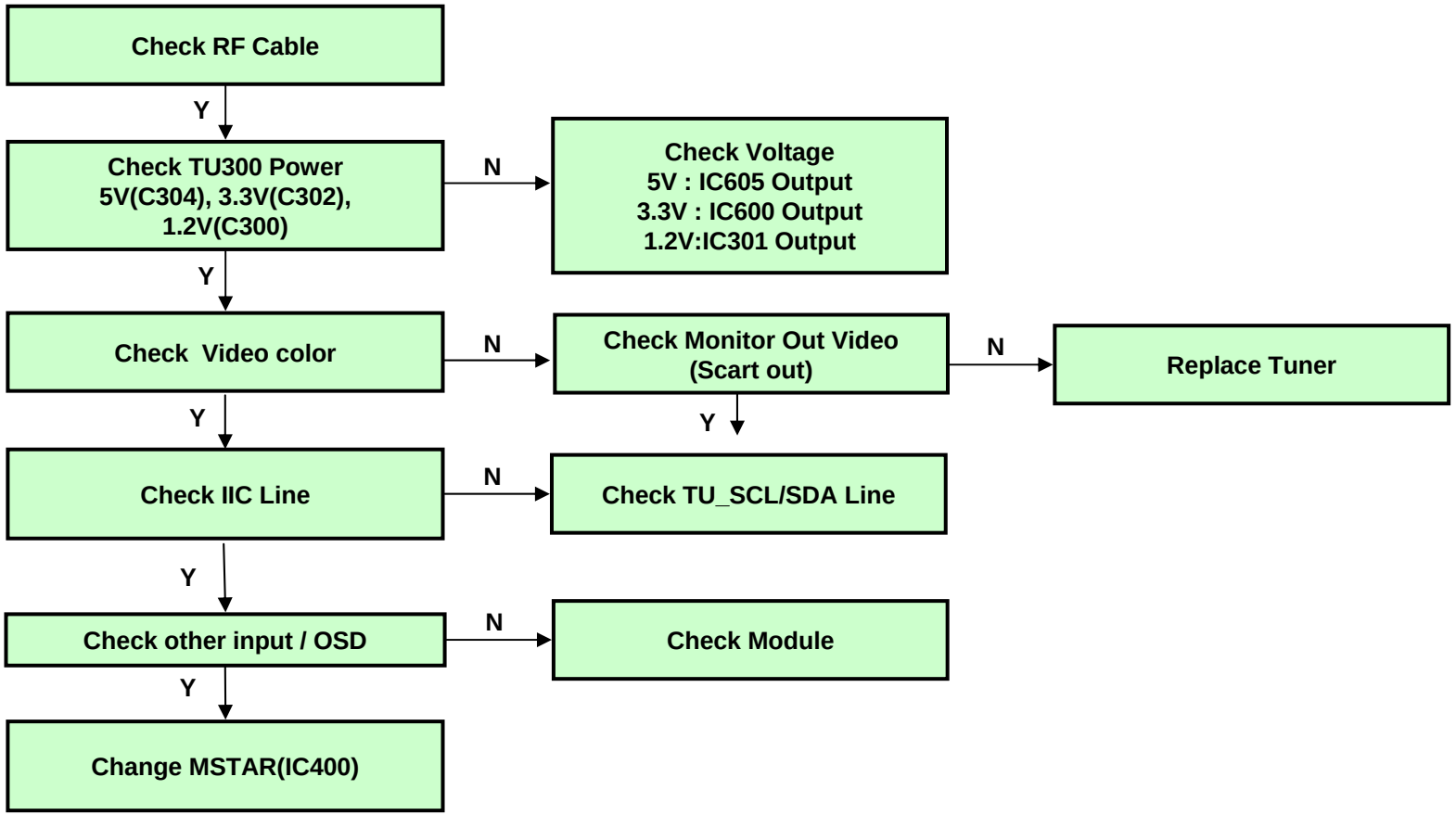

ⓒ LG Electronics. Inc.2010

PDP TV	Input Block	Analog TV Video Problem	Making	2010. 11. 16	전자 - 6-2
			Revision		A6-2

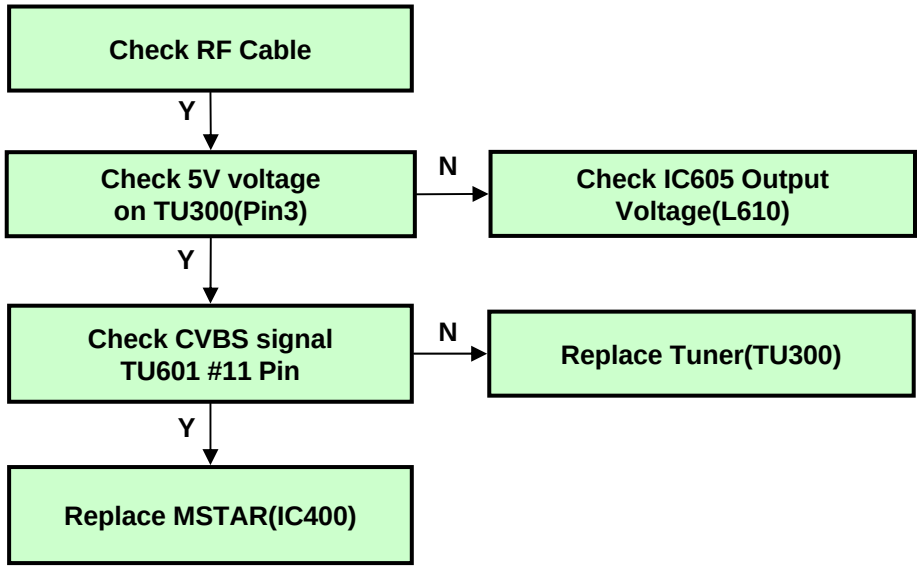

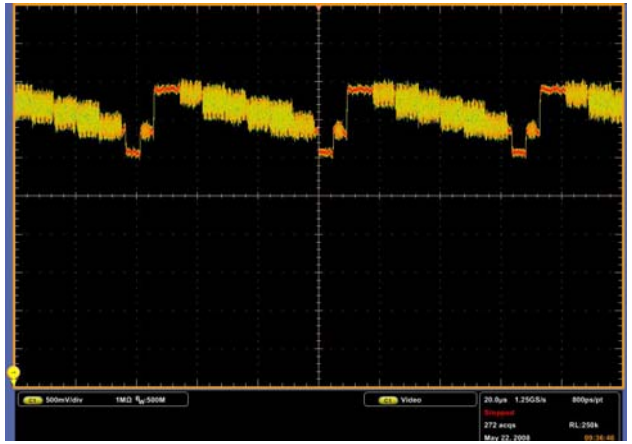

< CVBS waveform – sample >
- Defend on the input signal.

ⓒ LG Electronics. Inc.2010

PDP TV	Input Block	Component Video Problem	Making	2010. 11. 16	전자 - 6-2
			Revision		A6-3

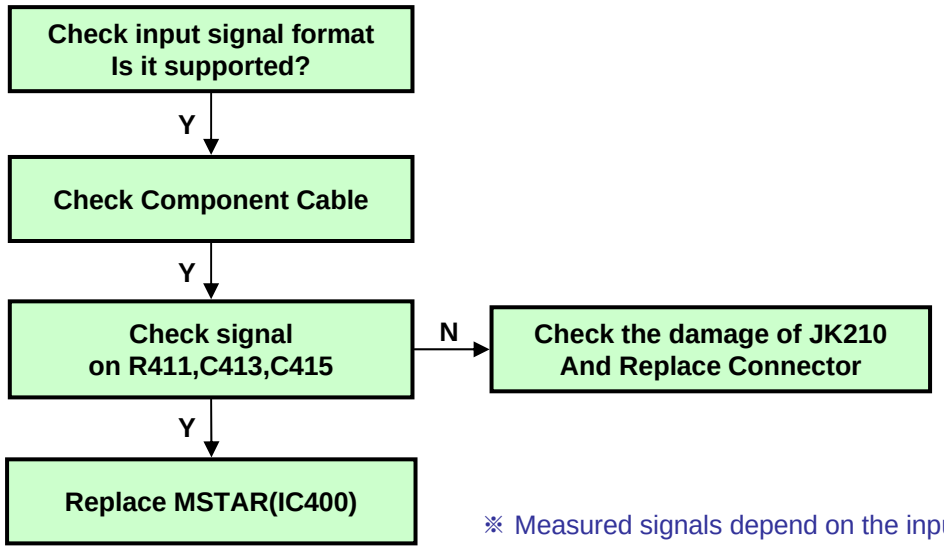

※ Measured signals depend on the input signal.

ⓒ LG Electronics. Inc.2010

PDP TV	Input Block	RGB(D-Sub) Video Problem	Making	2010. 11. 16	전자 - 6-2
			Revision		A6-4

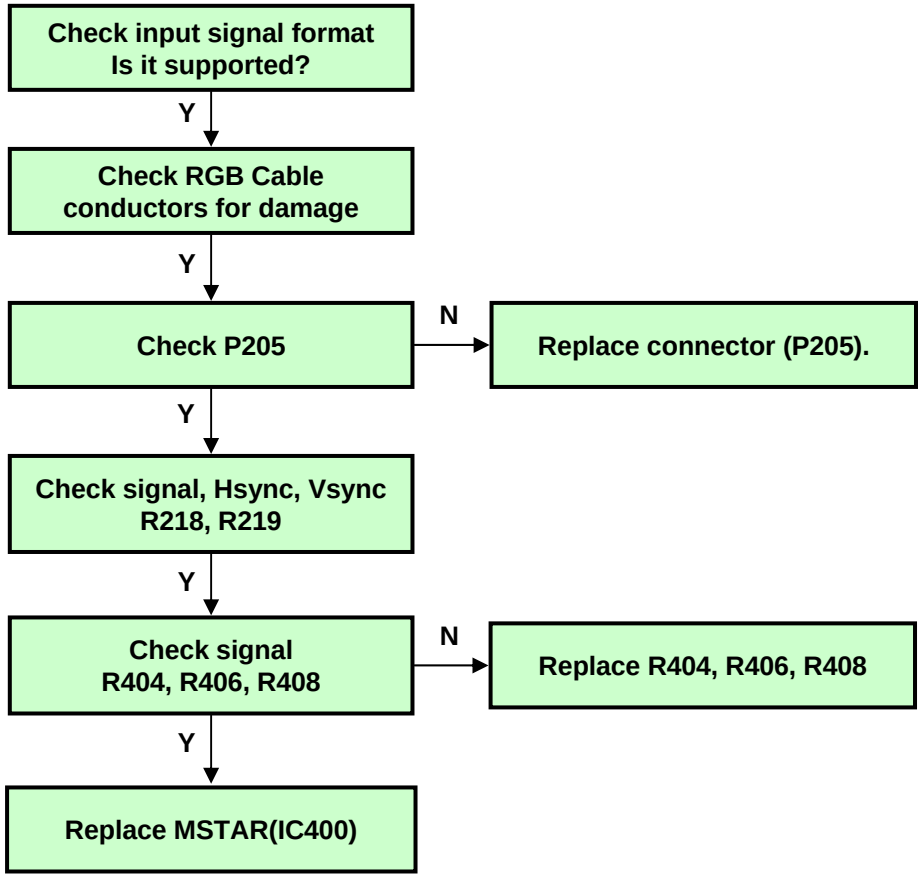

※ Measured signals depend on the input signal.

ⓒ LG Electronics. Inc.2010

PDP TV	Input Block	AV Video Problem	Making	2010. 11. 16	전자 - 6-2
			Revision		A6-5

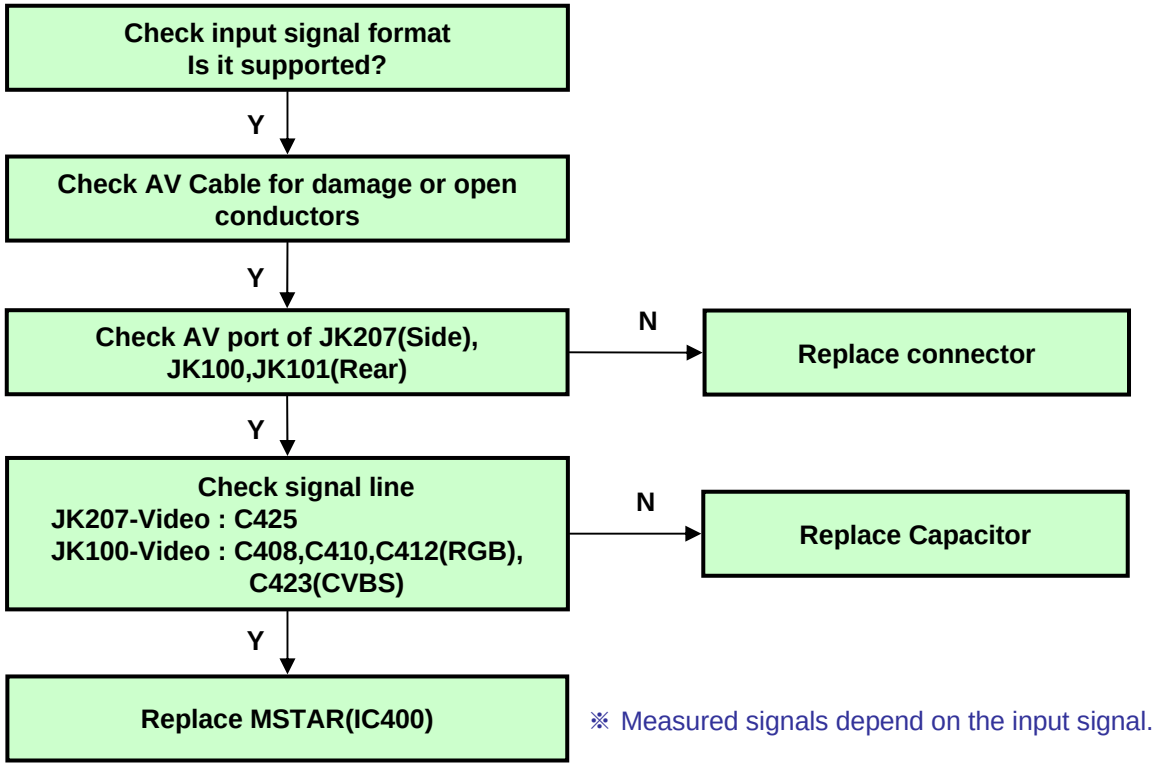

※ Measured signals depend on the input signal.

ⓒ LG Electronics. Inc.2010

PDP TV	Input Block	HDMI Video Problem	Making	2010. 11. 16	전자 - 6-2
			Revision		A6-6

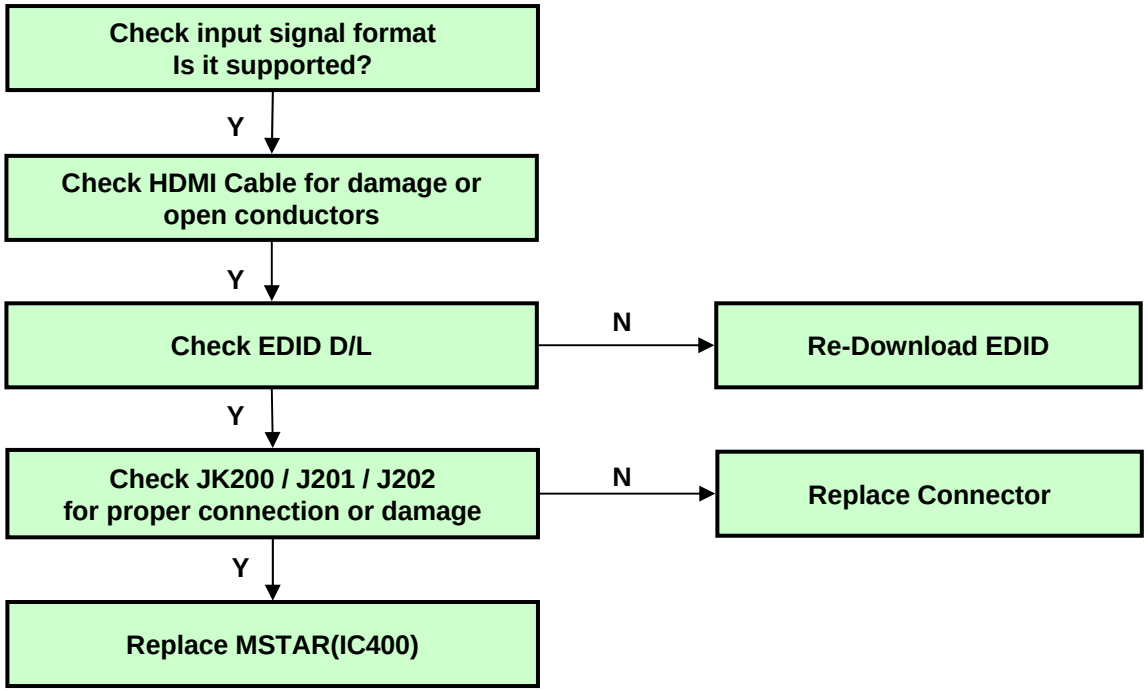

ⓒ LG Electronics. Inc.2010

PDP TV	Symptom	A. Picture Problem	Making	2010. 11. 16	전자 - 6-2
		Fuse Checking Method	Revision		A7

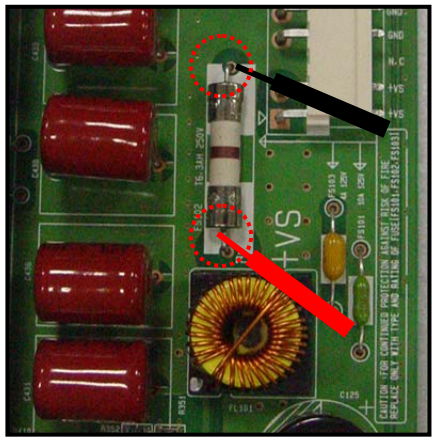

Pic. 1. Fuse check

Pic. 1.

< DMM mode >

Pic. 2.

1) Sound comes, the fuse is OK.
2) If Fuse is defects, it should check again voltage of 5V, Va, Va after replacing the fuse.
3) In case there are no voltage of 5V, Va, Vs, the board is failure, it need to replace the board.

ⓒ LG Electronics. Inc.2009

Repair Process-Reference data

PDP TV	Symptom	A. Picture Problem	Making	2010. 11. 16	전자 - 6-2
		Y-Sus Board Checking Method(50R3)	Revision		A8

▣ Check Method

① Check input voltages(5V, Va, Vs) at P103 connector.
② Check it is short or not between Vs and GND at P103 connector.
③ Check all of fuses open. (FS201, FS202, FS203, FS501)
④ Check voltage of diode , FET by using digital multi-meter.

▣ Measurement method

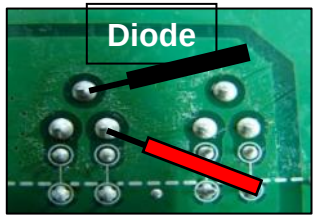

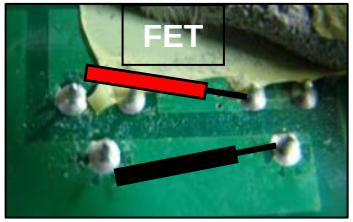

▣ Specifications

Position	Direction	Circuit No.		
HS601		D610	Q606,Q607	Q608,Q609
	Forward	0.35V ~ 0.45V	0.45V~0.55V	0.45V~0.55V
	Reverse	O.L. (Overload)		
HS602		D604,D605	Q601,Q602	
	Forward	0.35V ~ 0.45V	0.45V~0.55V	
	Reverse	O.L. (Overload)		
HS603		D602	Q603,Q605	Q610,Q612
	Forward	0.35V ~ 0.45V	0.35V ~ 0.45V	0.4V~0.5V
	Reverse	O.L. (Overload)		

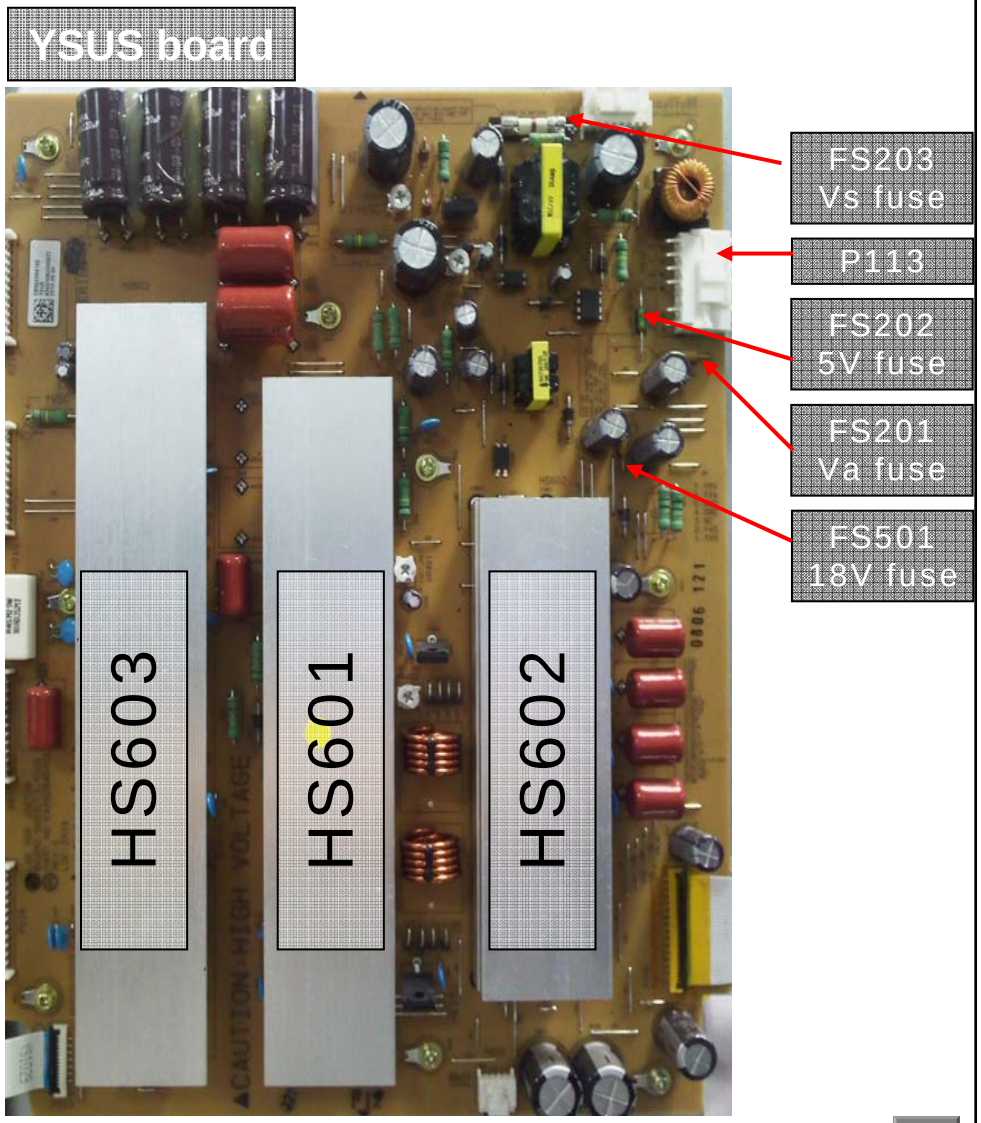

ⓒ LG Electronics. Inc.2009

Repair Process-Reference data

PDP TV	Symptom	A. Picture Problem	Making	2010. 11. 16	전자 - 6-2
		Z-Sus Board Checking Method(50R3)	Revision		A9

① Check input voltages(5V, Va, Vs) at P203 connector.
② Check it is short or not between Vs and GND at P203 connector.
③ Check all of fuses open. (FS202)
④ Check voltage of diode , FET by using digital multi-meter.

▣ Measuring Method

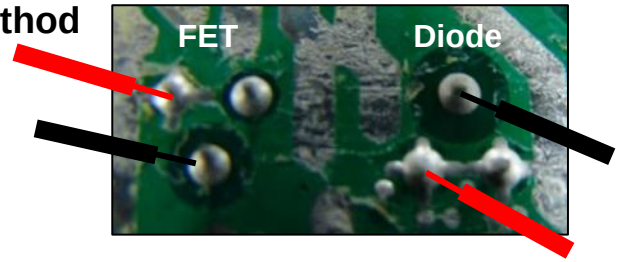

▣ Specifications

Position	Direction	Circuit No.		
HS101		D114,D118	Q107, Q110	Q106, Q109
	Forward	0.35V ~ 0.45V	0.35V ~ 0.45V	0.35V ~ 0.45V
	Reverse	O.L. (Overload)		
HS102		D109,D110,D108,D111	Q104,Q113,Q114	Q102,Q103
	Forward	0.35V ~ 0.45V	0.5V ~ 0.6V	0.45V~0.55V
	Reverse	O.L. (Overload)		

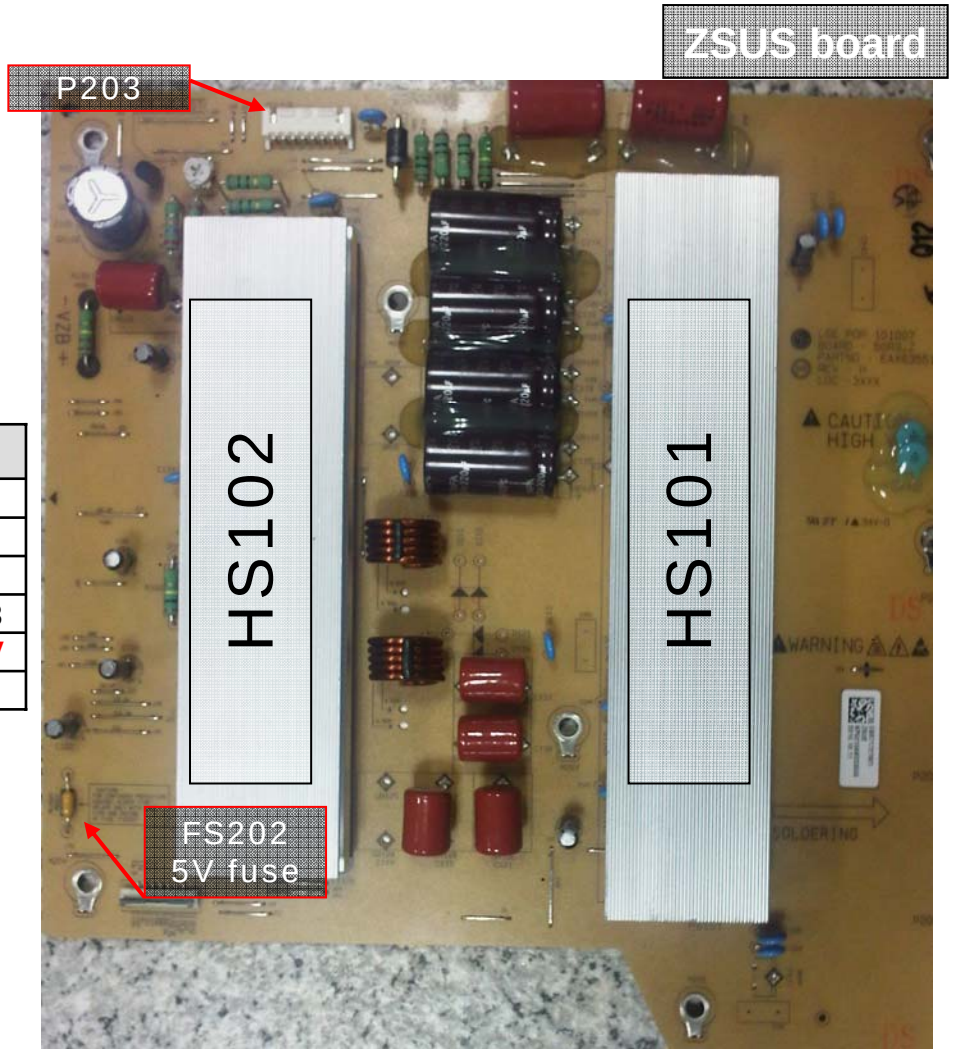

ⓒ LG Electronics. Inc.2009

Repair Process-Reference data

PDP TV	Symptom	A. Picture Problem	Making	2010. 11. 16	전자 - 6-2
		Check 5V, 17V on Power B/D	Revision		A12

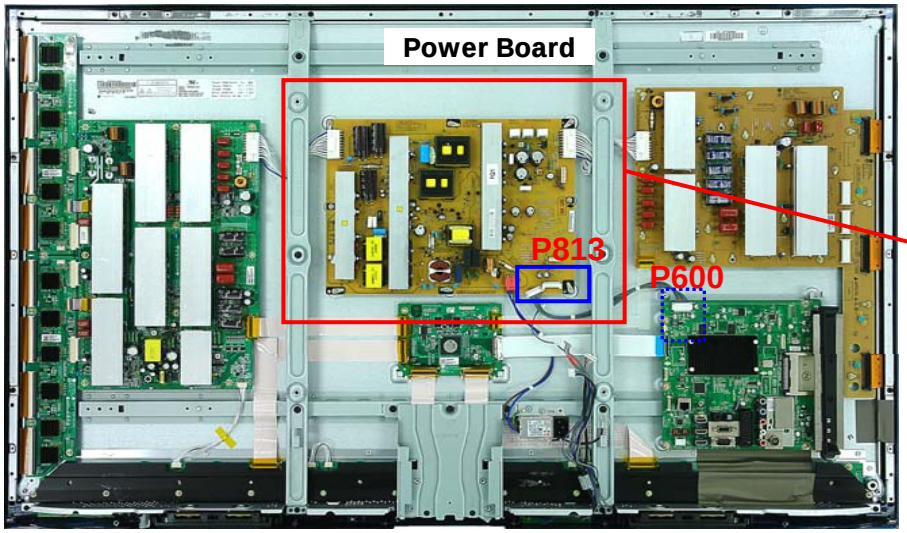

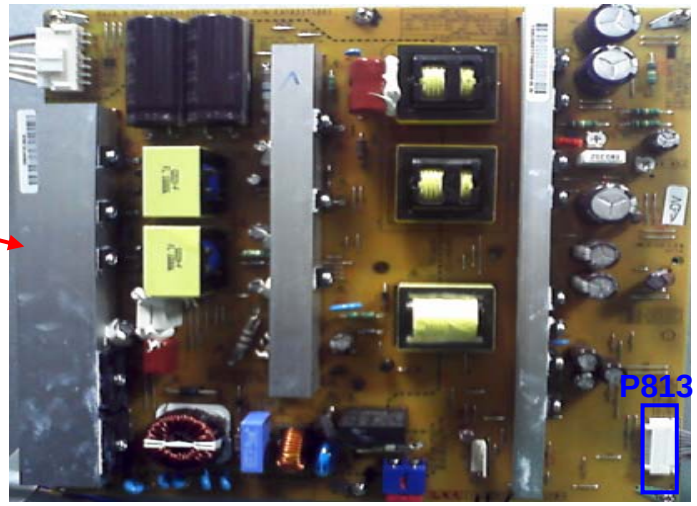

P813			
1	17V	2	17V
3	GND	4	GND
5	5V	6	5V
7	5V	8	Error_DET
9	GND	10	GND
11	GND	12	GND
13	STBY	14	STBY
15	RL_ON	16	AC DET
17	M_ON	18	AUTO_GND
Wafer	SMAW200-H18S2		

▣ Measure 5V voltage

▣ Measure 17V voltage

ⓒ LG Electronics. Inc.2009

Repair Process-Reference data

PDP TV	Symptom	A. Picture Problem	Making	2010. 11. 16	전자 - 6-2
		Control Board Checking Method(50R3)	Revision		A13

▣ Checking Method

① Check input voltages(5V of P105 / 18V of P2) at control board.

② Check LED is on.

③ If LED doesn't work, check crystal X1 output.

④ Check 3.3V, 5V IC.

⑤ Check MCM at VS_DA by using digital multi meter.

④ Check IC (IC53, IC51)

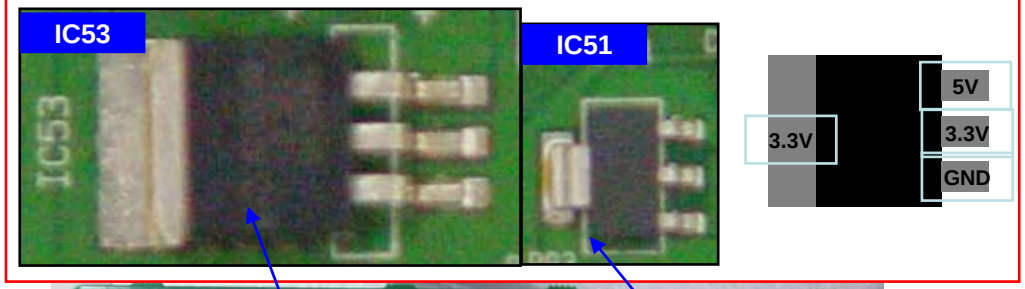

② Check LED On

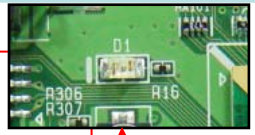

③ Check Crystal(X1)

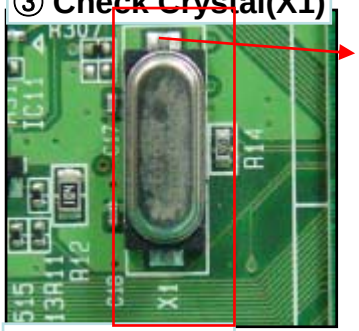

Check oscillation of Crystal
(Normal: 25 MHZ)

⑤ Check MCM

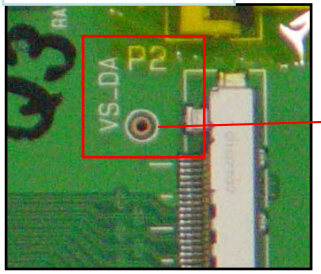

MCM Check point
(+)VS_DA / (-) GND
(Normal: 3.3V)

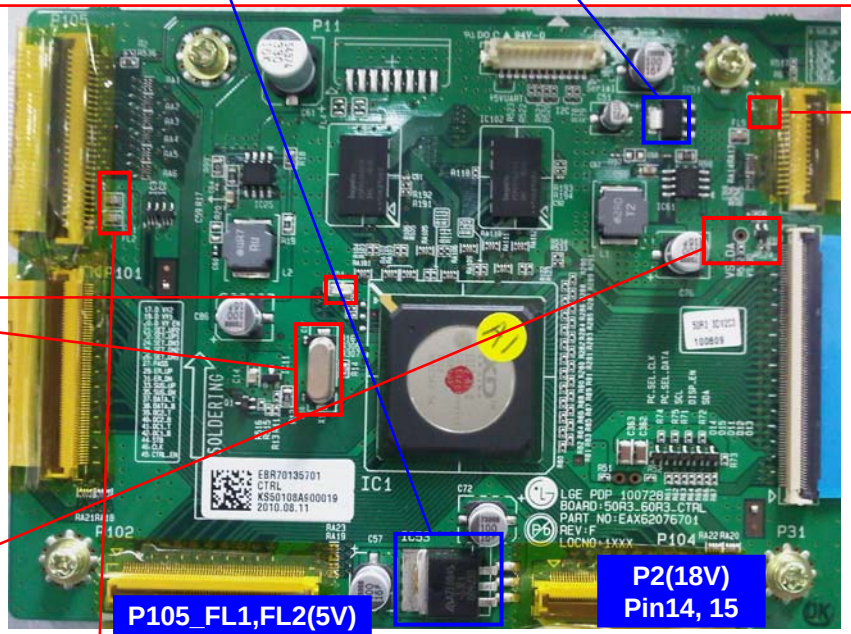

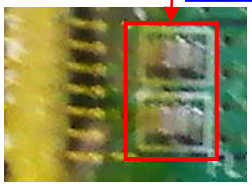

① Check Input voltage

A13

ⓒ LG Electronics. Inc.2009

PDP TV	Symptom	A. Picture Problem	Making	2010. 11. 16	전자 - 6-2
		Mal discharge Symptom	Revision		A14

▣ Dot type Mal-discharge symptom

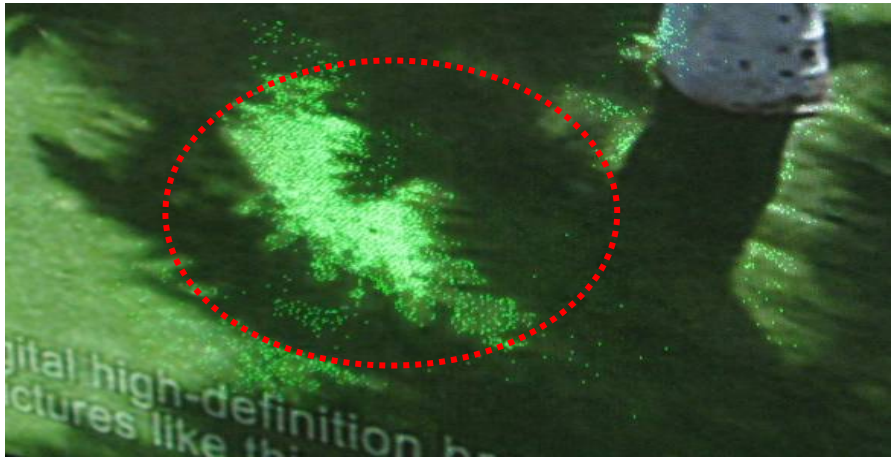

▣ Dark picture caused by Mal-discharge

▣ Scan type Mal-discharge symptom

ⓒ LG Electronics. Inc.2010

Repair Process-Reference data

PDP TV	Symptom	A. Picture Problem	Making	2010. 11. 16	전자 - 6-2
		PDP Module Rom Ver. Checking method	Revision		A15

▣ Check by using Rom Label on control board

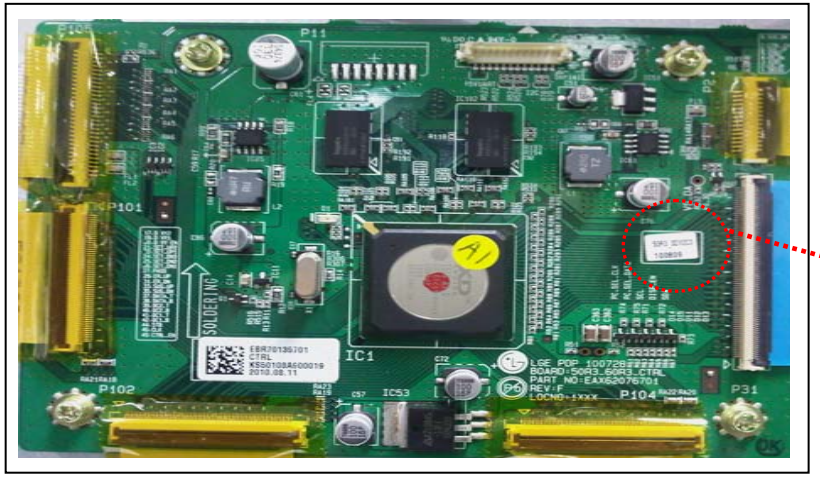

▣ Check by using SVC Remote controller

Press “In-start” →Press ”0413”
→ Select Panel Control → Check Module Rom ver.

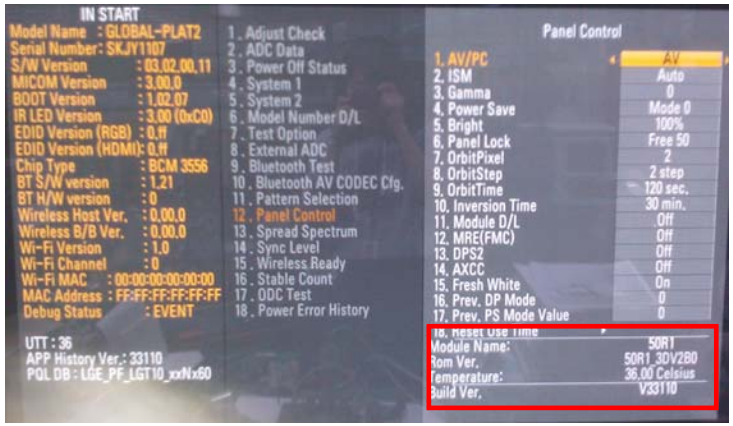

※Refer to the Module Rom upgrade manual for Rom upgrade.

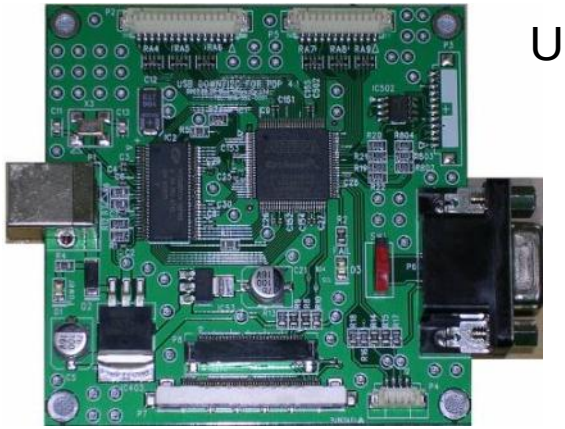

USB Type Jig

ⓒ LG Electronics. Inc.2010

Repair Process-Reference data

PDP TV	Symptom	A. Picture Problem	Making	2010. 11. 16	전자 - 6-2
		Y Drive B/D Checking method(50R1)	Revision		A16

▣ Y drive board

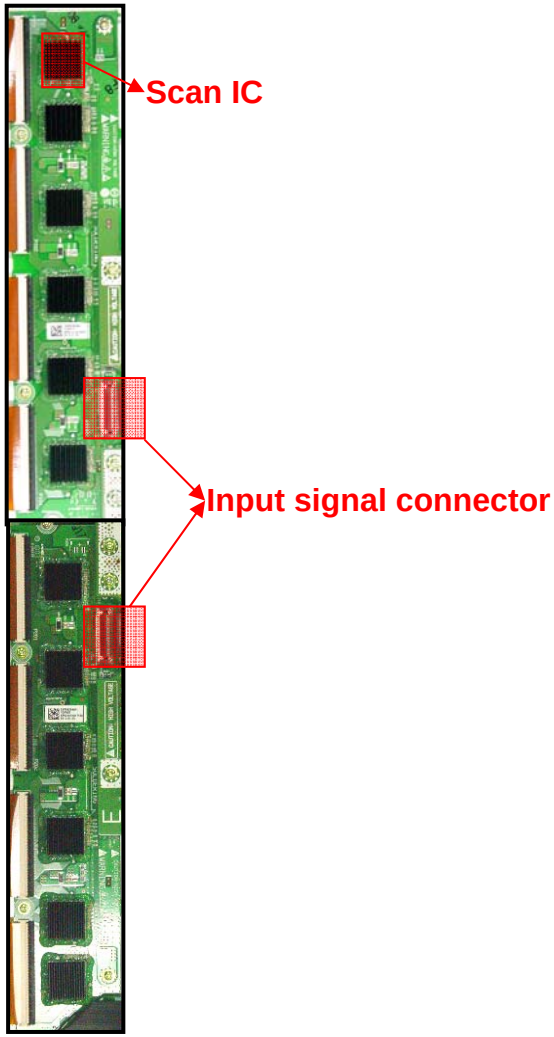

※ DMM (Digital Multi-Meter)

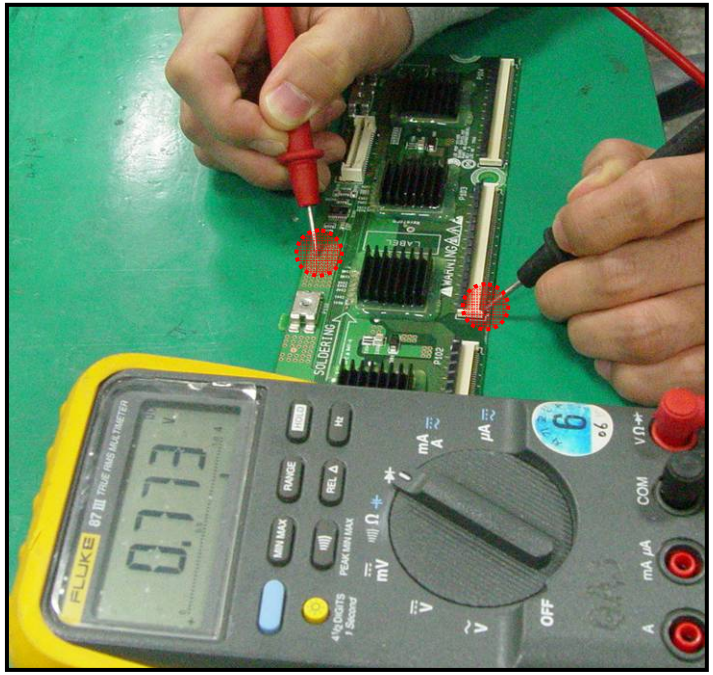

※ Check all output pins of scan IC (connector) using DMM.

ⓒ LG Electronics. Inc.2010

Repair Process-Reference data

PDP TV	Symptom	A. Picture Problem	Making	2010. 11. 16	전자 - 6-2
		(Half picture) X- B/D Checking method(50R1)	Revision		A18

▣ Half / partly display (or abnormal display)

-. Check Va input voltage.
(P121, P120, P220, P221, P320 : Power connector of the X board)
-. Check cables between CTRL board and X board.
-. Replace the X B/D.
-. Check TCP connection after X B/D replacement.

	Picture 1.	Picture 2.	Picture 3.
Half display (abnormal)	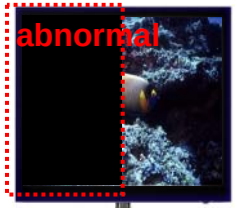		
Partly display (abnormal)	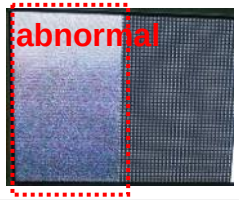	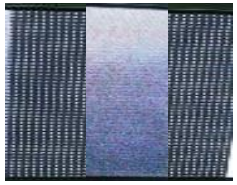	

▣ Connections between panel and X B/D

-. Right display (Picture 1.) ↔ Check/replace right X B/D
-. Both ends display (Picture 2.) ↔ Check/replace center X B/D
-. Left display (Picture 3.) ↔ Check/replace left X B/D

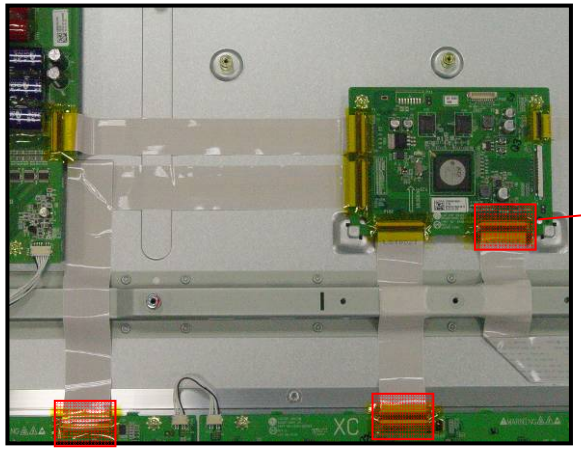

※ Check connections (TCP - X board, CTRL board - X board)

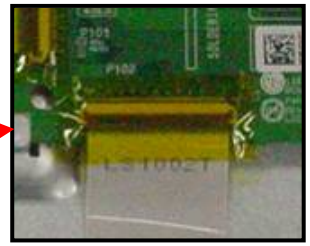

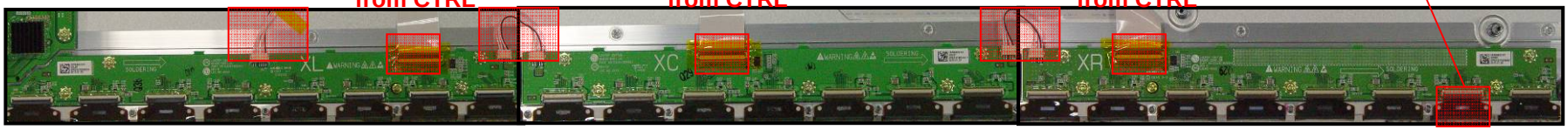

ⓒ LG Electronics. Inc.2010

PDP TV	Symptom	A. Picture Problem	Making	2010. 11. 16	전자 - 6-2
		Defect type cause by PDP Module	Revision		A19

First of all, Check whether all of cable between board was inserted properly or not.
Next, Check whether there is foreign material on connector.

Symptom picture	defects description	To action
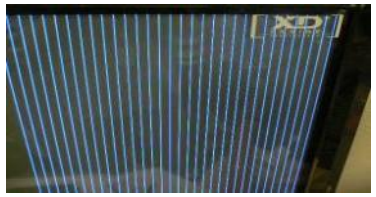	Regular vertical lines	1. Check connection (CTRL B/D, X B/D) 2. Check CTRL B/D 3. Replace CTRL B/D
	Vertical lines or Bar	1. Check connection (CTRL B/D, X B/D) 2. Check CTRL B/D 3. Replace CTRL B/D
	Many irregular vertical lines	1. Check connection (CTRL B/D, X B/D) 2. Check CTRL B/D 3. Replace CTRL B/D
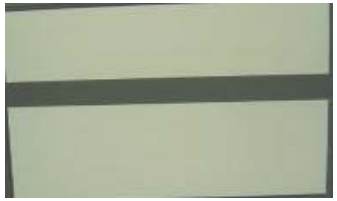	Horizontal Line or Bar	1. Check connection (Y-Sus B/D ↔Panel) 2. Check Y-Sus B/D 3. Replace Y-Sus B/D

ⓒ LG Electronics. Inc.2010

Repair Process-Reference data

PDP TV	Symptom	A. Picture Problem	Making	2010. 11. 16	전자 - 6-2
		Connector Type on PDP Module	Revision		A20

COF Type

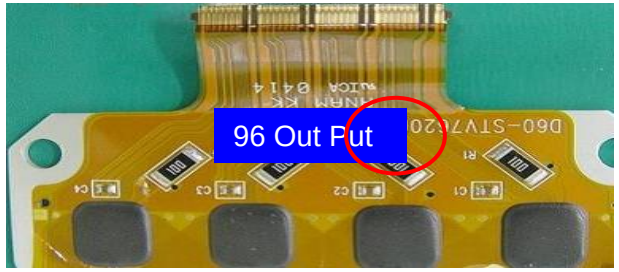

1. Check foreign & Connection status
2. Check bad soldering
   on Chip resistance

TCP Type

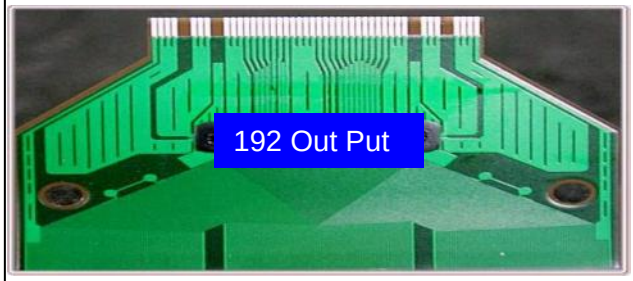

TCP (Tape Carrier Package) is film
for IC connect with Electrode pattern
(Direct Bonding) on X B/D

FFC Type

Connector to connect between
Electrode PAD Of PANEL and
Y Drive B/D,Z-Sus B/D

▣ **Defect symptom**

ⓒ LG Electronics. Inc.2010

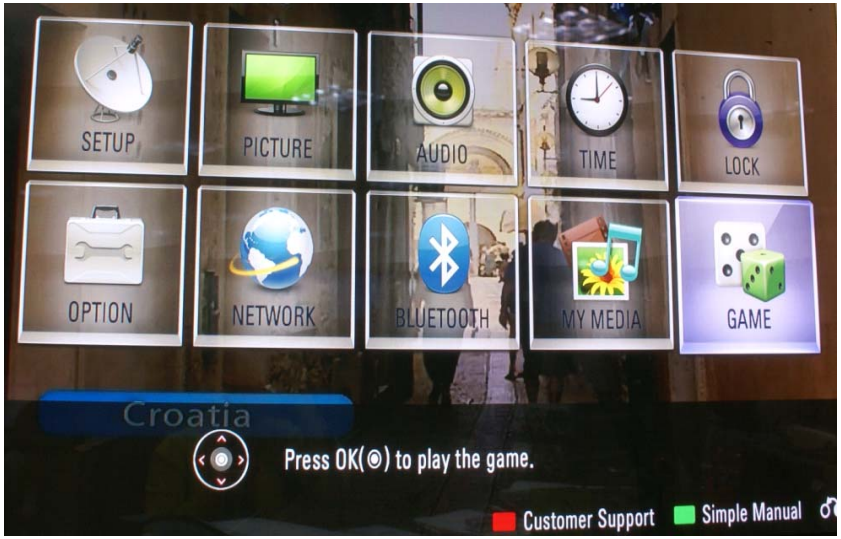

◆ MENU → Press Red Button on R/C → Singal TEST -> Diagnostics

1. Check whether Signal Strength, Signal Quality is over 50% or not.
2. If Signal Strength, Signal Quality is under 50%,install the Booster to increase signal level.

ⓒ LG Electronics. Inc.2010

PDP TV	Symptom	B. Power Problem	Making	2010. 11. 16	전자 - 6-2
		Check voltage on Power board	Revision		A22

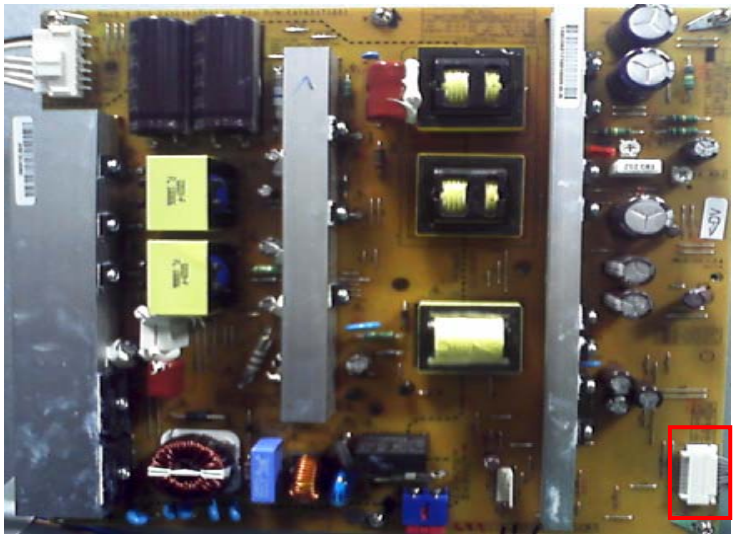

Pin Map
Power B/D↔Main B/D

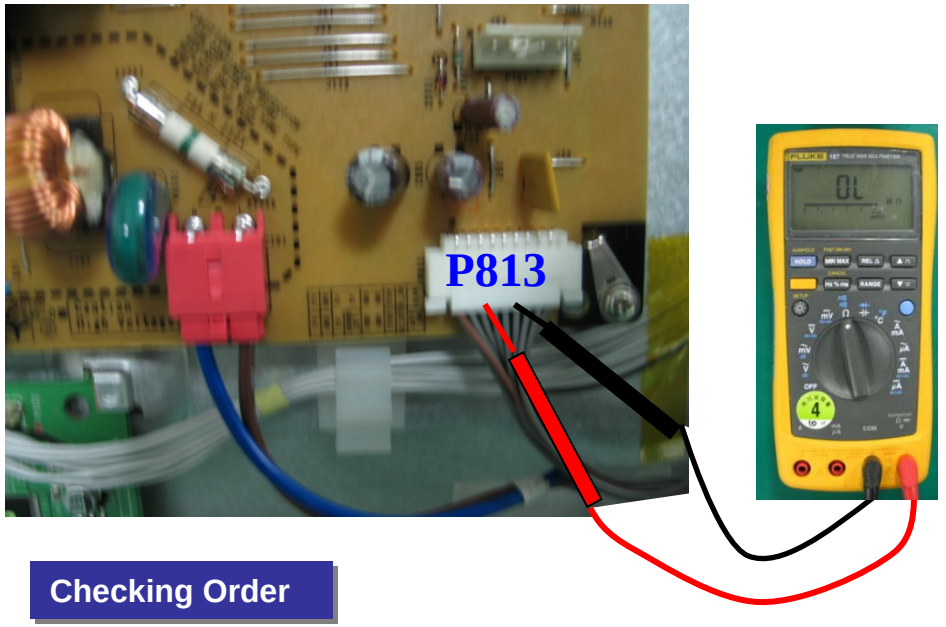

Checking Order

P813			
1	17V	2	17V
3	GND	4	GND
5	5V	6	5V
7	5V	8	Error_DET
9	GND	10	GND
11	GND	12	GND
13	STBY	14	STBY
15	RL_ON	16	AC DET
17	M_ON	18	AUTO_GND
Wafer	SMAW200-H18S2		

No.	Checking Point	Spec	Remark
1	STBY	5V	
2	5V	5V	
3	17V	17V	
4	AC DET	High(3.3V~5V)	
5	RL_ON	High(3.3V~5V)	
6	M_ON	High(3.3V~5V)	

ⓒ LG Electronics. Inc.2010

Repair Process-Reference data

PDP TV	Symptom	B. Power Problem	Making	2010. 11. 16	전자 - 6-2
		Power board Checking Method	Revision		A23

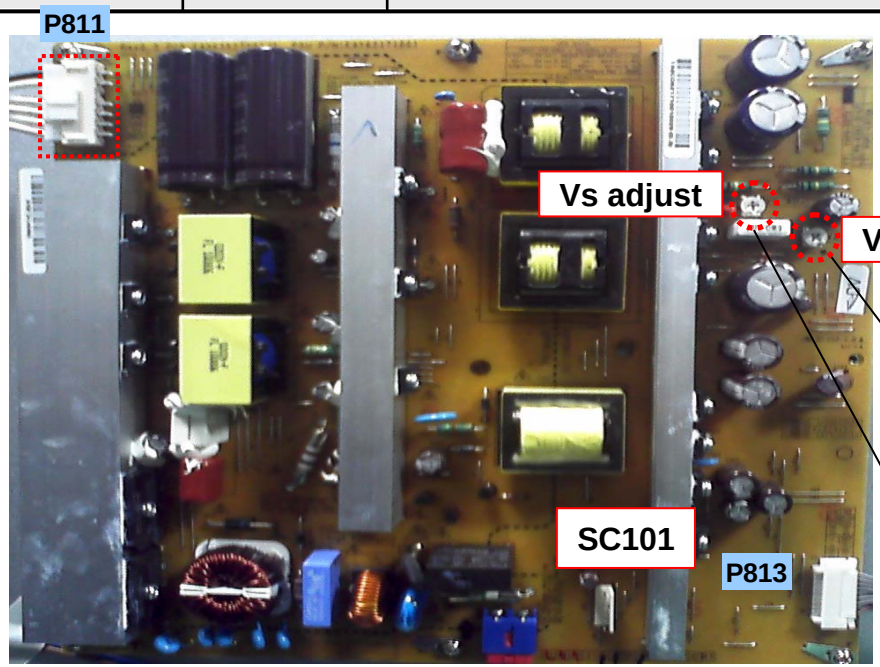

Power B/D↔ Y-Sus B/D(P811)

PIN	NAME
1	VS
2	VS
3	NC
4	GND
5	GND
6	VA
7	M5V

◆ Check 5V,Va,Vs voltage

: For Voltage specification, refer to the PDP Module Label.

Va Voltage ADJ

◆ Adjust Va,Vs voltage.

Vs Voltage ADJ

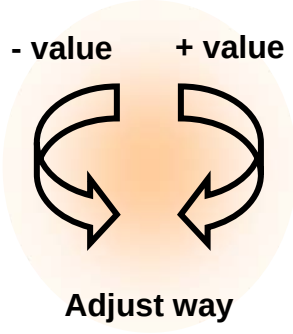

▣ Checking Method

① Check soldering status on each major component.

② Check there is problem on major component or not by eye. (CONDENSER, FET, IC, Resistor)

③ Check FUSE.

④ Check 5V,Va,Vs voltage

※ PSU Maker: 1) LGIT 2) LITEON 3) YUYANG

※ If happen Power board Protection,

check whether there is Short or Open on Y-SUS, Z-SUS B/D or not.

ⓒ LG Electronics. Inc.2010

Repair Process-Reference data

PDP TV	Symptom	B. Power Problem	Making	2010. 11. 16	전자 - 6-2
		Check Power off History	Revision		A24

▣ Check Power off History by using SVC Remote controller

Press “In-start” →Press” 0000” → Select “Power Off History” → Pop up Module Rom ver.

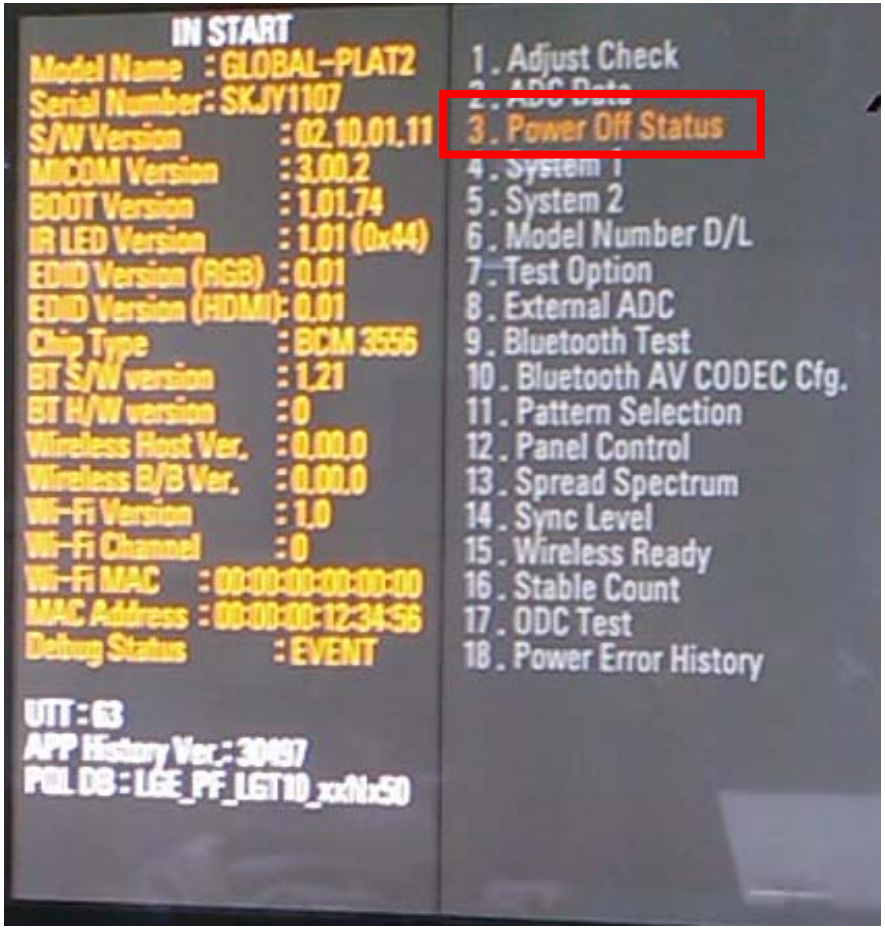

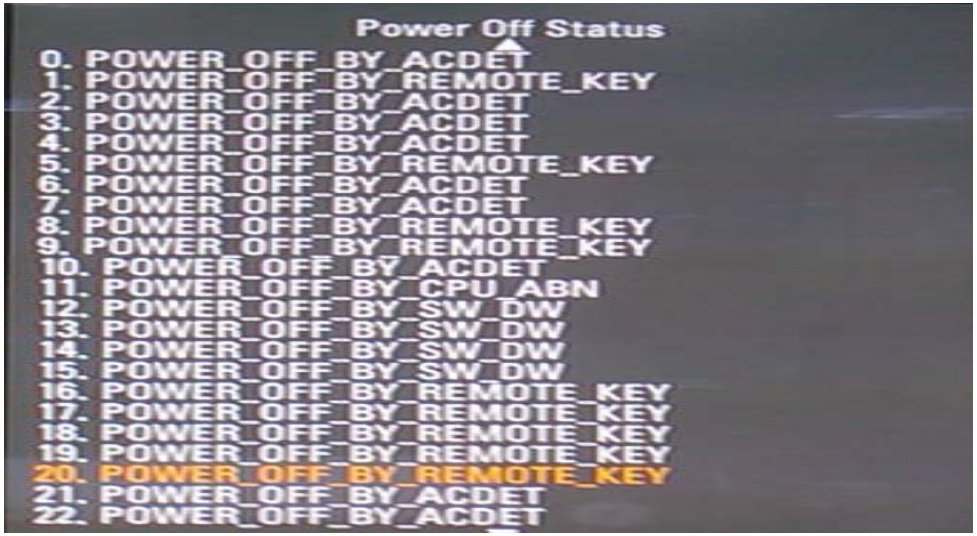

LAST HISTORY 1~5	Appear Power off history 5ea. (1 is the latest history)
RCU OFF	Power off by Remote control
KEY OFF	Mechanical power switch off
2HOUR OFF	After turn on by OnTimer, There is no operation for 2hours
NO SIGNAL OFF	In case that there is no signal for 15minutes

ⓒ LG Electronics. Inc.2010

Repair Process-Reference data

PDP TV	Symptom	C. Sound Problem	Making	2010. 11. 16	전자 - 6-2
		Speaker cable checking method	Revision		A25

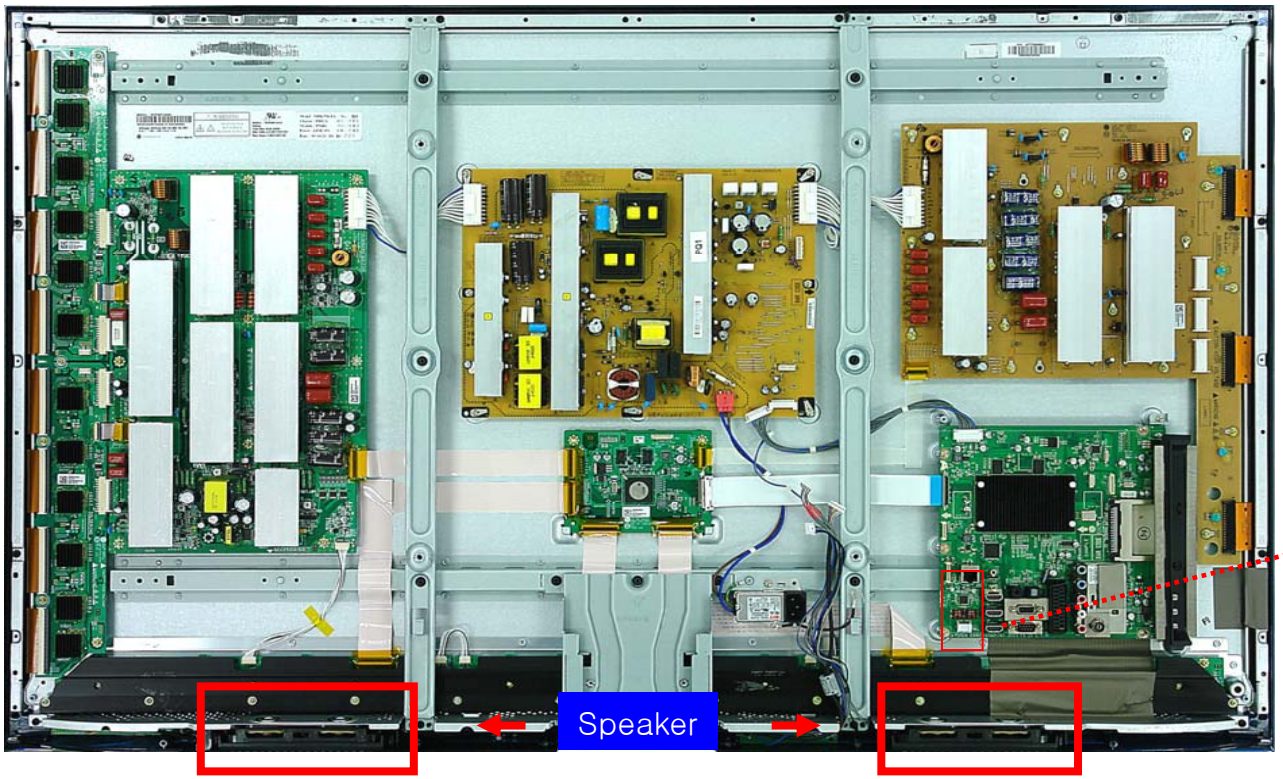

Jack for Speaker connection

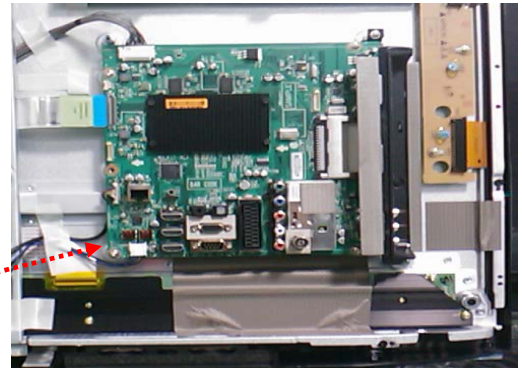

1.Check whether speaker jack was inserted properly on Main B/D side & speaker side or not.
2. Check whether speaker cable have problem (disconnection wire) or not.

ⓒ LG Electronics. Inc.2010

Repair Process-Reference data

PDP TV	Symptom	D. General function defect	Making	2010. 11. 16	전자 - 6-2
		Check Remote control IR operation	Revision		A26

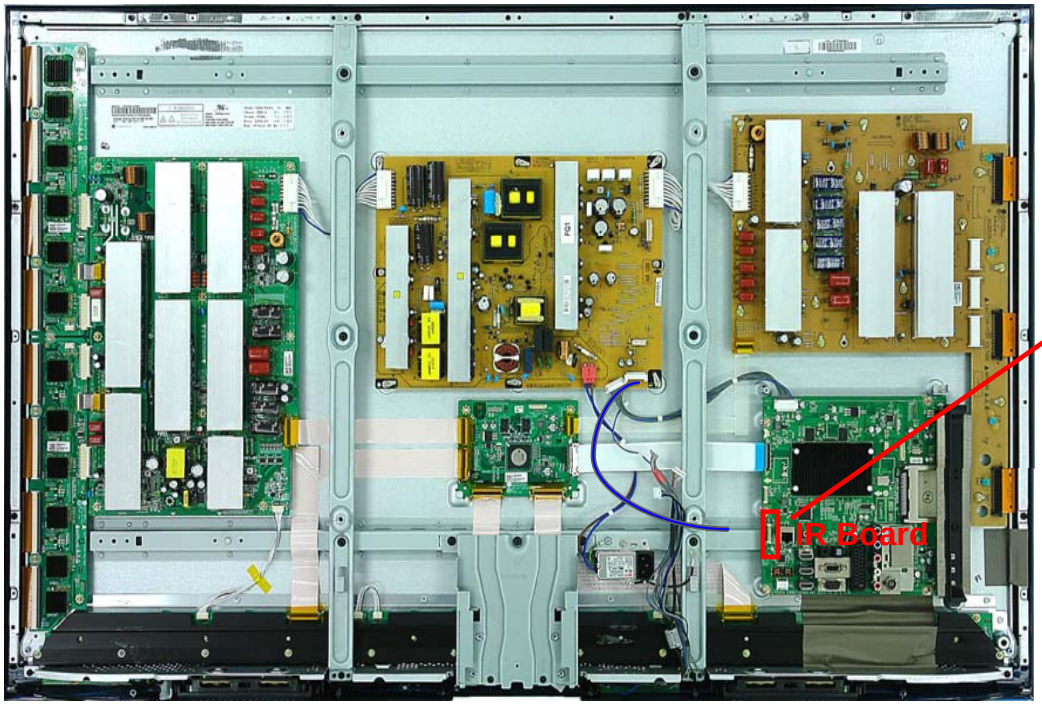

IR
GND
KEY1
KEY2
LED-RED
GND
SCL
SDA
GND
3.3V ST
NC
NC
TOUCH_VER_CHK
NC
NC

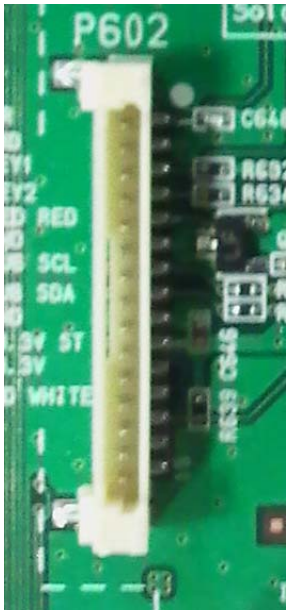

▣ Checking method

1.Check connector was inserted properly on Main board and IR board.

2. Check +3.3V_ST Voltage at Pin10

3. Check whether appear voltage on multi meter when operate remote control.

※ Test Condition for case 3

→ Check Point: Pin 1(IR)

→ TV: power on status

→ Multi meter: Select DC 10V

IR & Local key Board for 2/3/4/550 TOOL

ⓒ LG Electronics. Inc.2010

Repair Process-Reference data

PDP TV	Symptom	D. General function defect	Making	2010. 11. 16	전자 - 6-2
		Check Local Key operation			A27

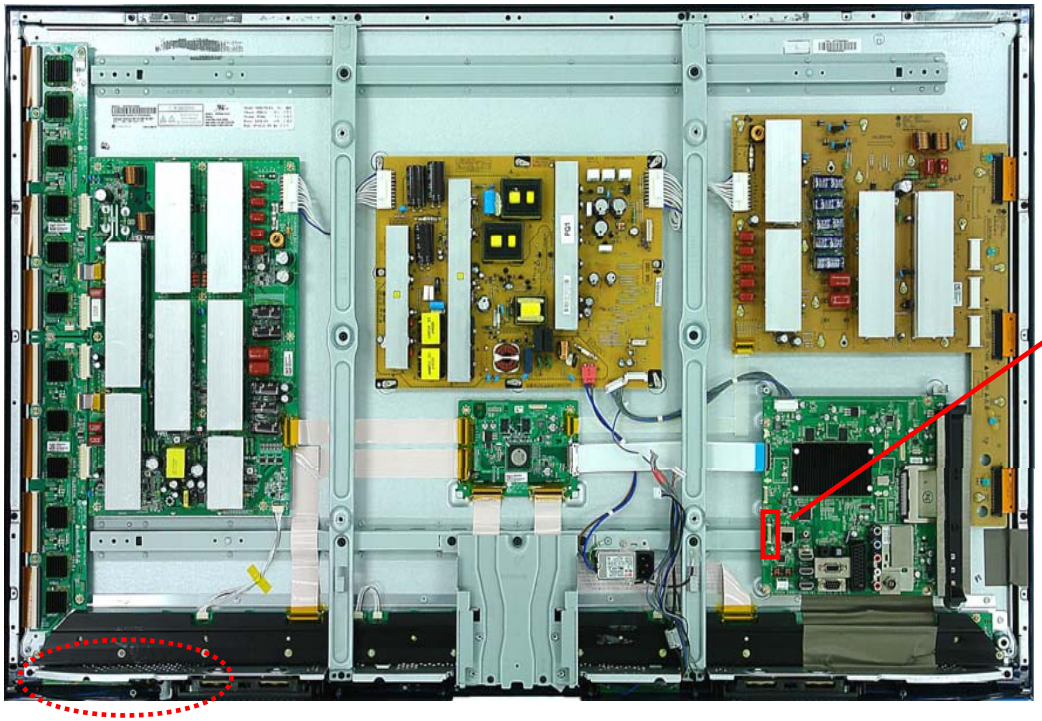

P+	P-	Vol+	Vol-	OK	Menu	Input	Power

IR
GND
KEY1
KEY2
LED-RED
GND
SCL
SDA
GND
3.3V ST
NC
NC
TOUCH_VER_CHK
NC
NC

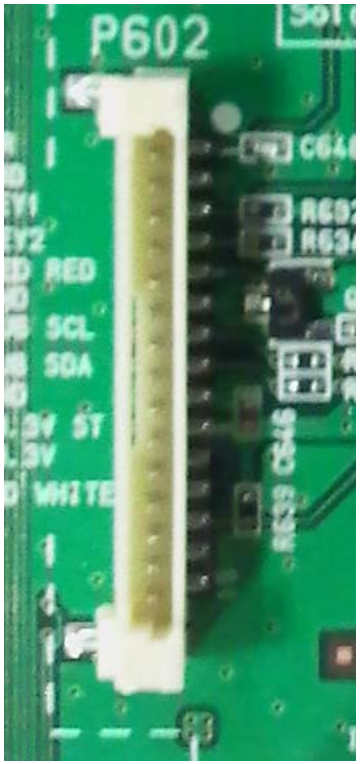

IR & Local key Board for 2/3/4/550 TOOL

1.Check connector was inserted properly
on Main board and IR board.
2. Check whether appear voltage on multi meter
when operate Local switch.
※ Test Condition for case 3
→ Check Point: Pin 2,3(Key1,Key2)
→ TV: power on status
→ Multi meter: Select DC 10V

ⓒ LG Electronics. Inc.2010

Repair Process-Reference data

PDP TV	Symptom	D. General function defect	Making	2010. 11. 16	전자 - 6-2
		Check RF emitter operation			A28

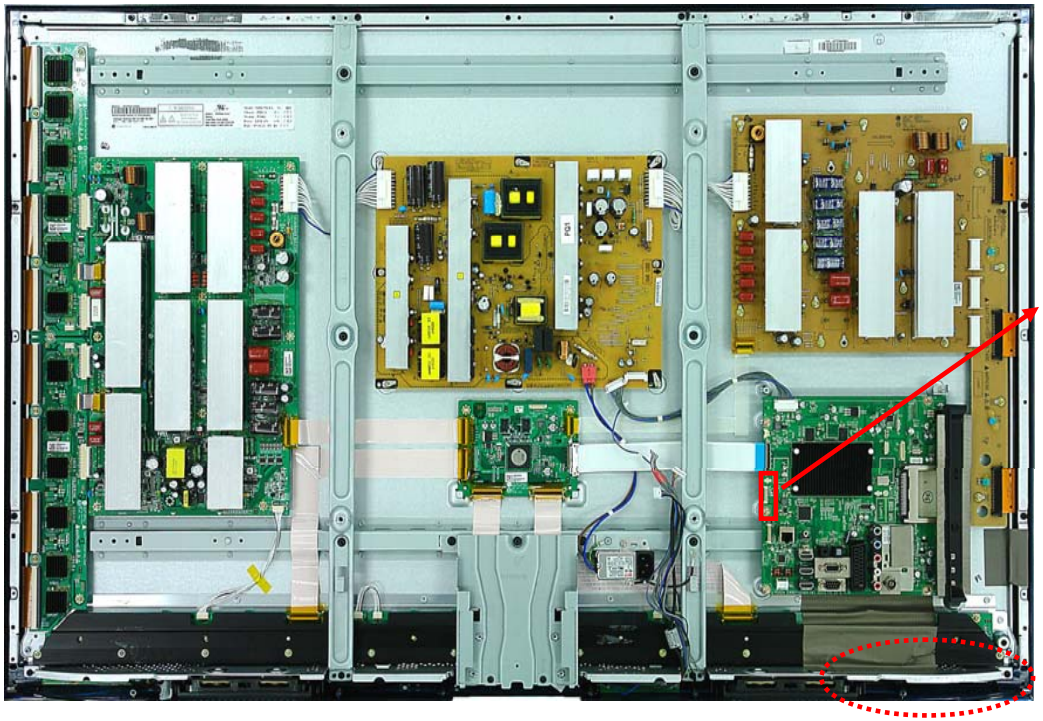

+3.3V
GND
3D_RF_RXD
3D_RF_TXD
3D_RFMODULE_RESET
3D_RFMODULE_DC
3D_RFMODULE_DD
GND
3D_RF_GPIO0
3D_RF_GPIO1
3D_RF_GPIO2
3D_L/R_SYNC

RF emitter Board

1.Check connector was inserted properly
on Main board and RF emitter board.
2. Check whether appear voltage on multi meter
when operate RF emitter board.
※ Test Condition for case 3
→ Check Point: Pin 12
→ TV: power on status
→ Multi meter: Select DC 10V

ⓒ LG Electronics. Inc.2010