作成承認印	配布許可印
ニコン 映像カンパニー 品質保証部 GM	サービス 計画課 M

Nikon

D3100

VBA28001

REPAIR MANUAL

Nikon | NIKON CORPORATION
Tokyo, Japan

Copyright © 2010 by Nikon Corporation.
All Rights Reserved.
無断転載を禁ず !!

Printed in Japan March 2010

User ID:INC

Contents

Disassembly D1
Warning D1
1. External Appearance D2
Rear cover unit D2
Front cover unit D6
Discharge of main condenser D7
Top cover unit D8
2. Rear Cover D9
SD cover unit D9
LCD monitor cover D10
Eyepiece D10
Retainer plate D11
Speaker D12
Rear FPC D12
LCD monitor D13
Rear button D13
LV lever D14
TFT sponge D14
SD access lamp window D14
3. Top Cover D15
SB release PCB unit D15
SB upper cover D17
SB lower cover unit D17
AF assist lamp unit D19
Top cover FPC unit D20
Command dial unit D21
Info & "+ -" aperture button D21
ON-OFF dial D22
Mode dial unit D23
Hot shoe D24
Prism box unit D25
Screen D26
SI (super impose) display plate D26
LCD unit D27
G7 lens unit D27
4. Sub-frame (tentative) D29
Main condenser D29
IF holder D29
TOGO PCB unit D30
Battery box unit D31

User ID:INC

Shield plate unit D35
SZ-DC/DC PCB unit D36
Sub-frame D37
Bottom plate unit D38
5. Front Body D41
Image sensor unit D41
Shutter PCB D42
MG PCB unit D47
SQ PCB unit D48
Bayonet mount D49
F-min SW D51
Lens contact unit D51
AF sensor unit D53
Lens release button unit D53
Mirror unit D54

Assembly A1
1. Front Body A1
Mirror unit A1
Lens release button unit A2
AF sensor unit A2
Lens contact unit A3
F-min SW A5
Bayonet mount A5
SQ PCB unit A7
Height adjustment of aperture lever A8
MG PCB unit A8
Shutter PCB A10
Adjustment of shutter curtain speed A14
Inspection and adjustment of flange-back (body-back) A15
Image sensor unit A16
2. Sub-frame A18
Bottom plate unit A18
Radiating sheet for repair A21
Sub-frame A22
SZ-DC/DC PCB unit A23
Sub-frame unit A24
Battery box unit A26
TOGO PCB unit A30
G7 lens unit A31
LCD unit A33
SI (super impose) display plate A34

User ID:INC

Screen....A34
Prism box unit....A35
Angle adjustment of main mirror and sub-mirror....A35
Inspection and adjustment of "∞ (infinity)" focus....A36
IF holder....A36
Main condenser....A37
Inspection for AE-CCD positioning....A38
3. Top Cover....A40
Hot shoe....A40
Mode dial unit....A40
ON-OFF dial....A42
Info & "+ −" aperture button....A42
Command dial unit....A43
Top cover FPC unit....A44
AF assist lamp unit....A45
SB lower cover unit....A45
SB upper cover....A47
SB release PCB unit....A48
4. Rear Cover....A51
SD access lamp window....A51
TFT sponge....A51
LV lever....A51
Rear button....A52
LCD monitor....A52
Rear FPC....A53
Speaker....A53
Eyepiece....A55
LCD monitor cover....A55
SD cover....A56
5. External Appearance....A57
Top cover unit....A57
Adjustment of camera body (except imaging)....A59
Firmware update....A61
How to connect camera and PC....A61
How to install inspection and adjustment software for camera body (except imaging)....A61
Inspection and adjustment for AE accuracy....A61
Inspection and adjustment for AF accuracy....A62
Confirmation of data....A63
Switch information monitor....A63
Inspection of sequence operation....A63
Inspection of sequence error....A63

User ID:INC

CPU version, number of release times....A63
Inspection of LCD light-up....A63
Reset of compensated AF defocus amount....A63
Rewriting of offset value of AF adj. lens....A63
Front cover unit....A65
Rear cover unit....A67
Measurement of consumption current value....A71
Operation check of image sensor cleaning....A72
Image adjustment 1....A74
Image adjustment 2....A74
Image adjustment 3....A75
Image adjustment 4....A75
Image adjustment 5....A75
Image adjustment 6....A76
Image adjustment 7....A76
Obtaining of reference value....A77
Factory default setting....A77
Confirmation of data....A77
Version no. /Serial no.....A77

Wiring....E1

Mounting Drawing....E2

FUSE arrangement....E3

Inspection standards....R1

Tool list....T1

Screw sheet....S1

User ID:INC

Disassembly

Warning

⚠ WARNING

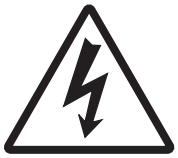

- There are high voltage parts inside. Be careful of this electric shock, when you remove the cover.
- You must discharge the main condenser according to the instruction of this repair manual after you remove the cover.

Caution:

① In disassembly/(re)assembly, be sure to use conductive mat (J5033) and wrist strap (J5033-5) in order to protect electric parts from static electricity.

② Before disassembling, be sure to remove batteries or AC power cord.

③ In disassembling, be sure to memorize the processing state of wires and FPCs, screws to be fixed and their types, etc.

④ The low-pass filter of the image CCD PCB is easily damaged. Handle it very carefully.

ref. In this manual, the application of grease and adhesive is indicated by coloring

CFD-409Z EDB0011

(grease: yellow/adhesive: red) or J-number.

Note:

① The prism box unit can be disassembled until the stage shown from page D26 to D28. (ref. parts list)

② What are used in this manual may differ from the actual products in forms, etc.

Points to notice for Lead-free solder products
• Lead-free solder is used for this product. • For soldering work, the special solder and soldering iron are required. • Do not mix the lead-free solder with the conventional solder. • Use the special soldering iron respectively for lead-free solder and lead solder. They cannot be used in common.

User ID:INC

1. External Appearance

Rear cover unit

- Incline the battery cover unit (#B151) at an approx. 35° as below, and remove it.

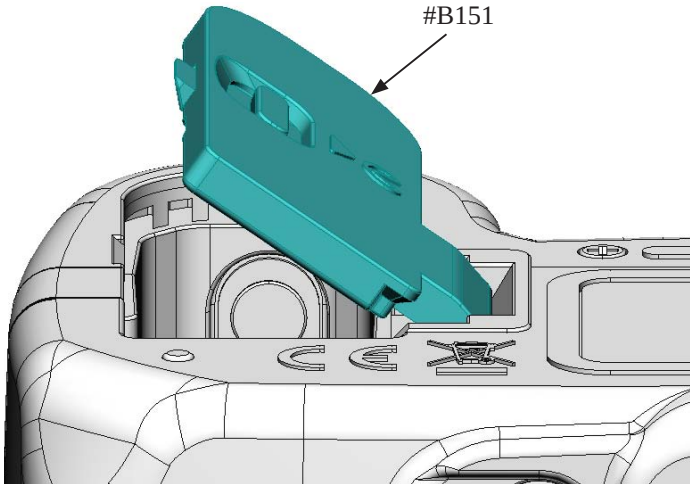

- Remove the power connector cover (#72).
- Remove the IF cover (#71).

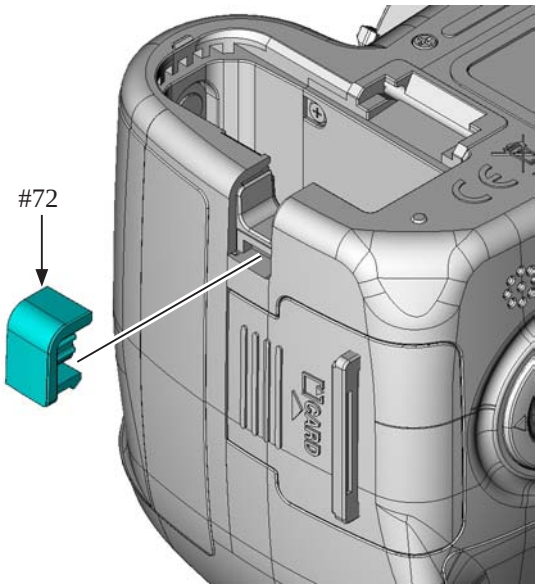

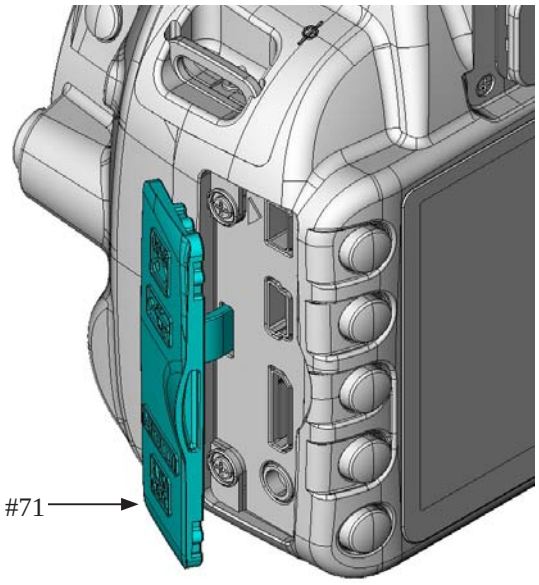

User ID:INC

- Remove the cover (#267).
- Take out the screw (#614).
- Take out the two screws (#623).
- Take out the screw (#634).

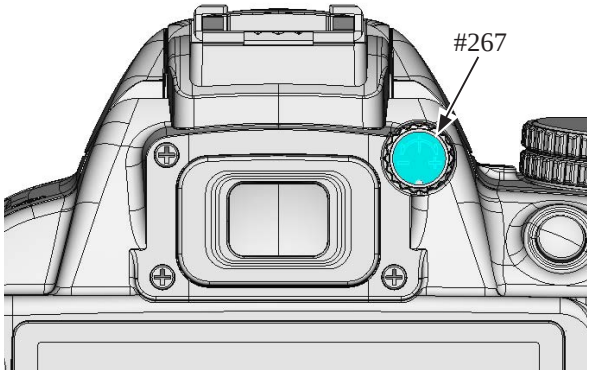

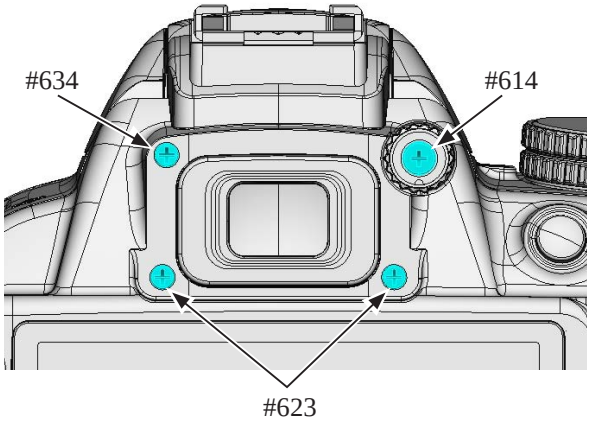

- Take out the two screws (#631).

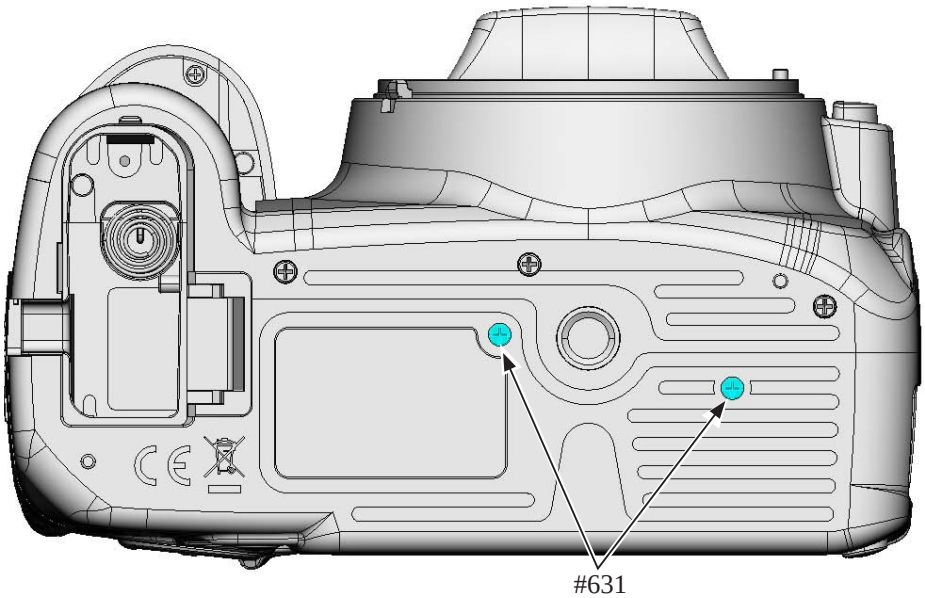

User ID:INC

- Take out the screw (#661).
- Remove the grip unit (#B26).（Do NOT reuse the grip unit that was once removed.）
- Remove the grip cover (#27).

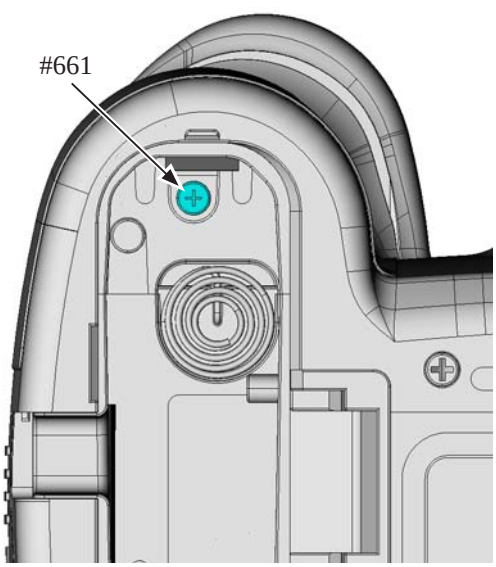

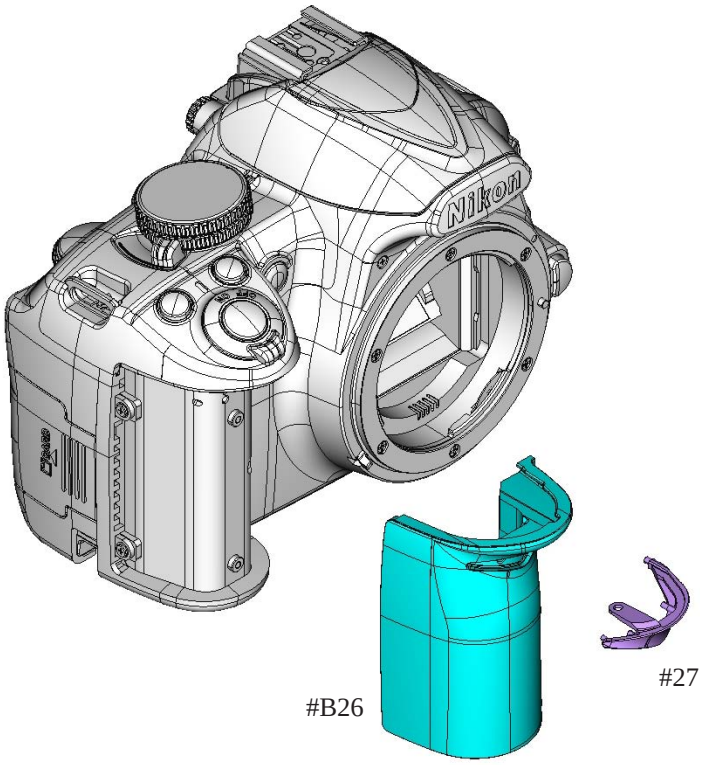

- Take out the two screws (#640).
- Take out the two screws (#623).

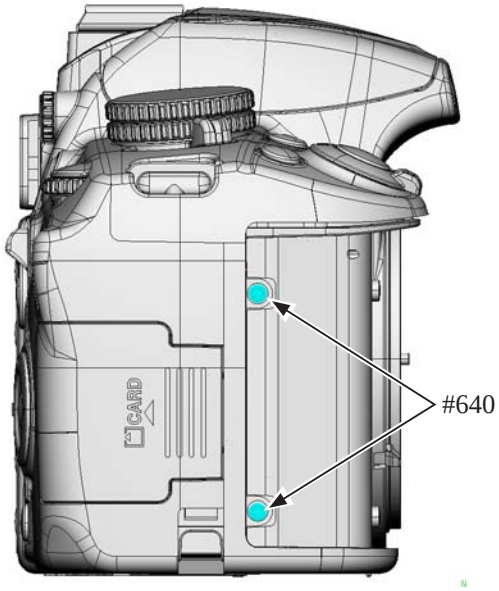

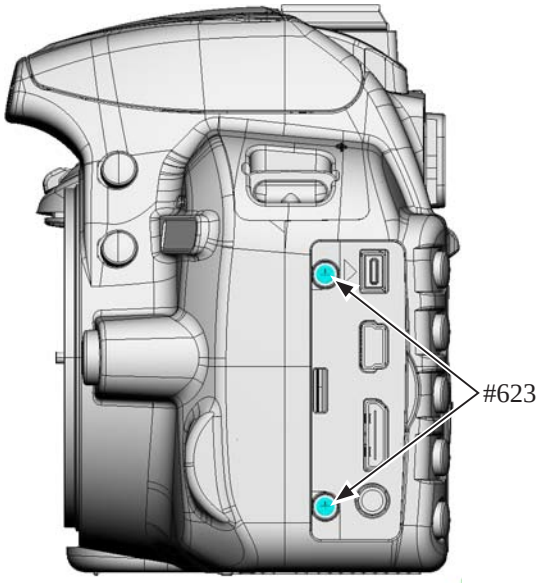

User ID:INC

- Remove the rubber (#410) and double-stick tape (#411).
- Take out the screw (#622).

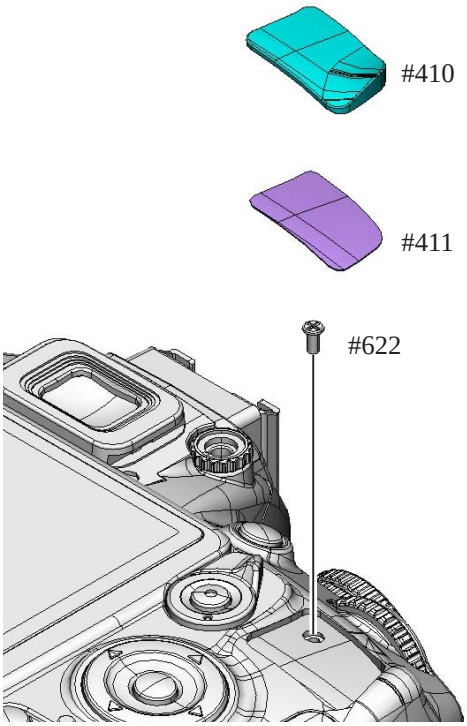

- Lift up the rear cover unit.
- Disconnect the FPC.
- Remove the rear cover unit.

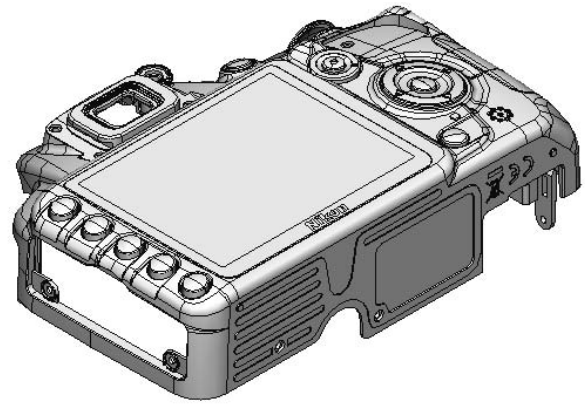

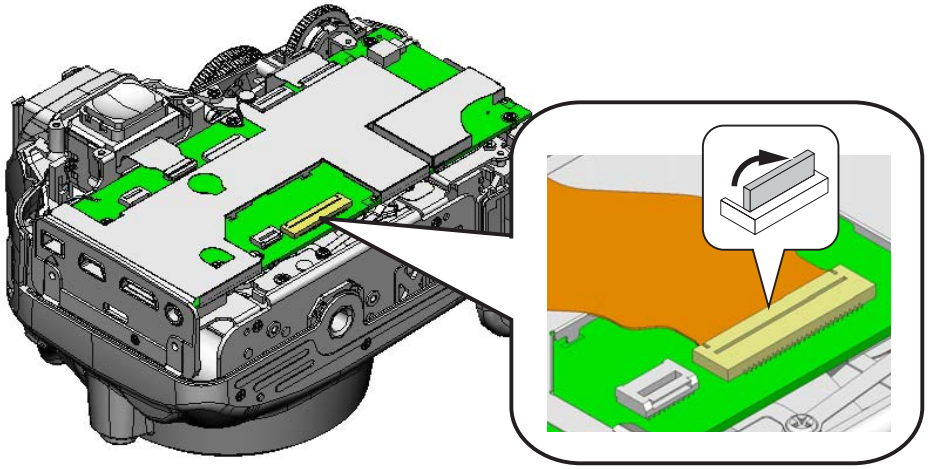

User ID:INC

Front cover unit

- Take out the two screws (#644) and one screw (#639).
- Take out the three screws (#631).
- Take out the one screw (#643) and two screws (#634).

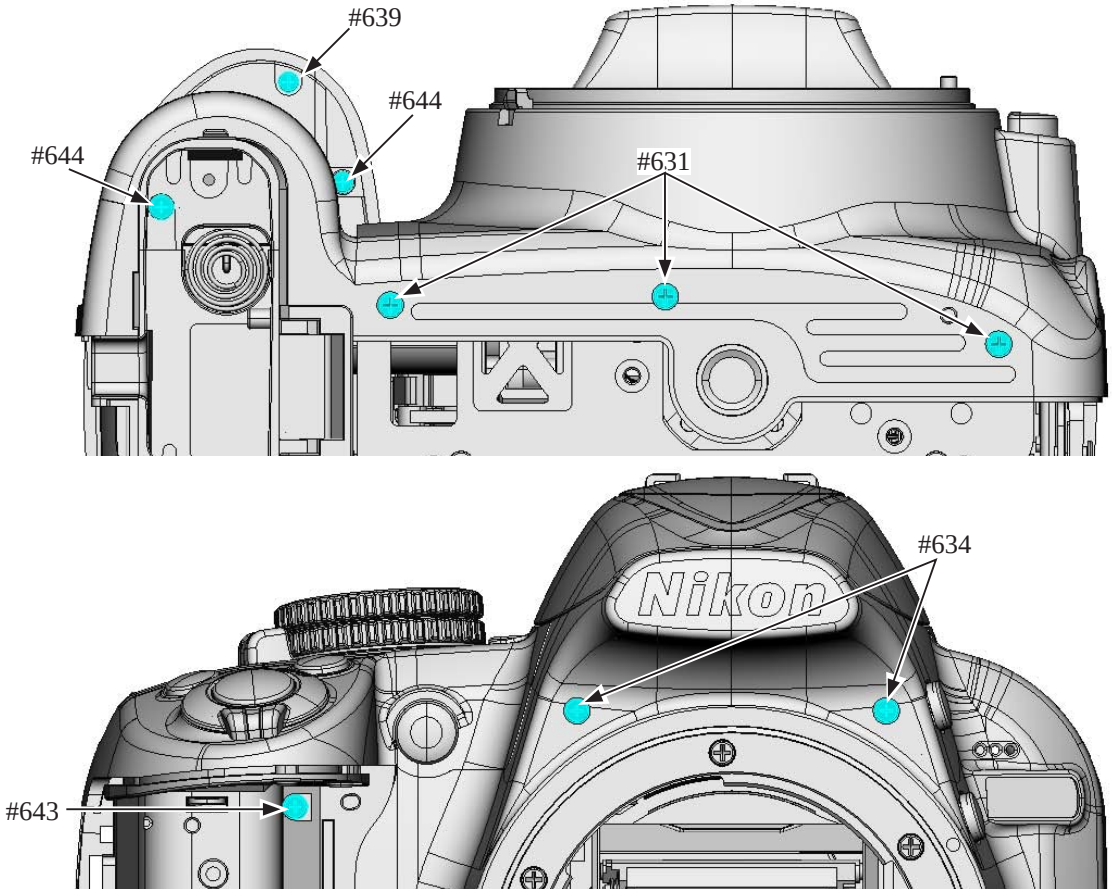

- Slacken the tripod base area, and remove the front cover unit.

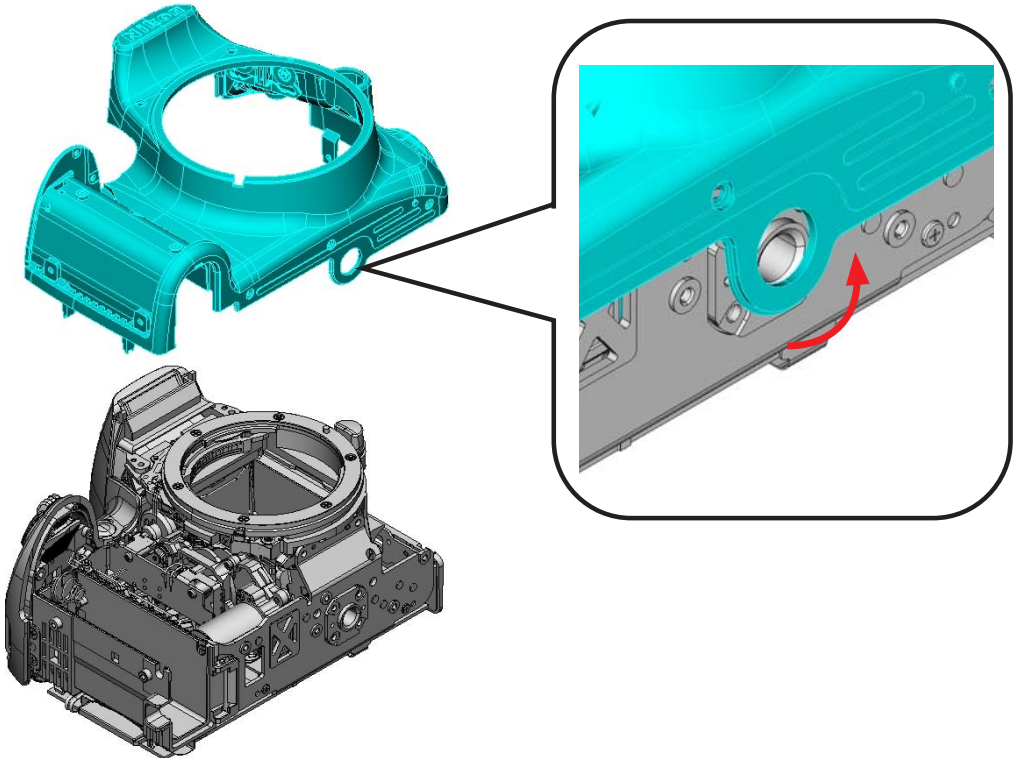

User ID:INC

- Take out the two screws (#646) from the front cover (#24).
- Remove the spring (#160).
- Remove the button (#465).

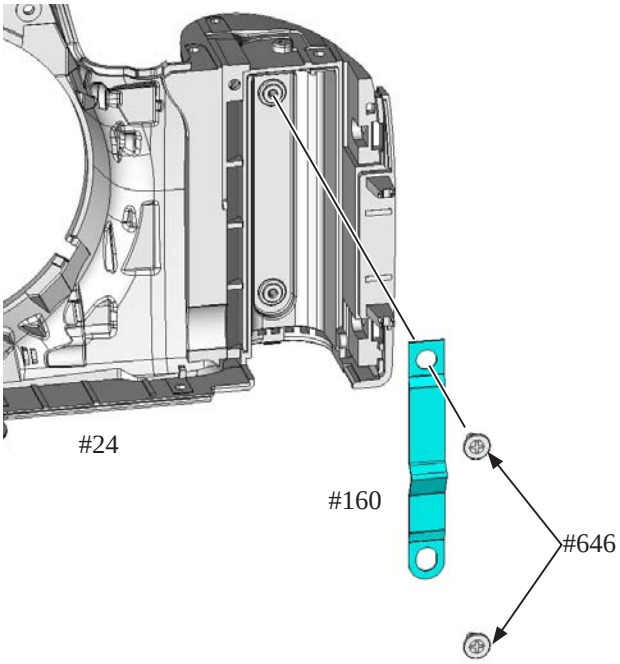

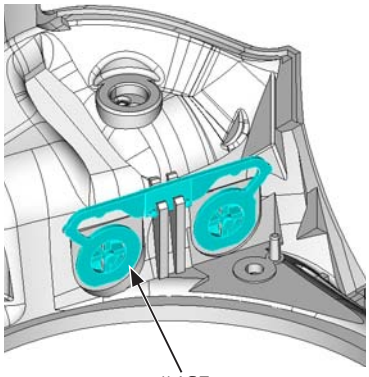

Discharge of main condenser

⚠ WARNING

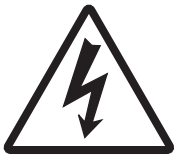

- There are high voltage parts inside. Be careful of this electric shock, when you remove the cover.
- You must discharge the main condenser according to the instruction of this repair manual after you remove the cover.

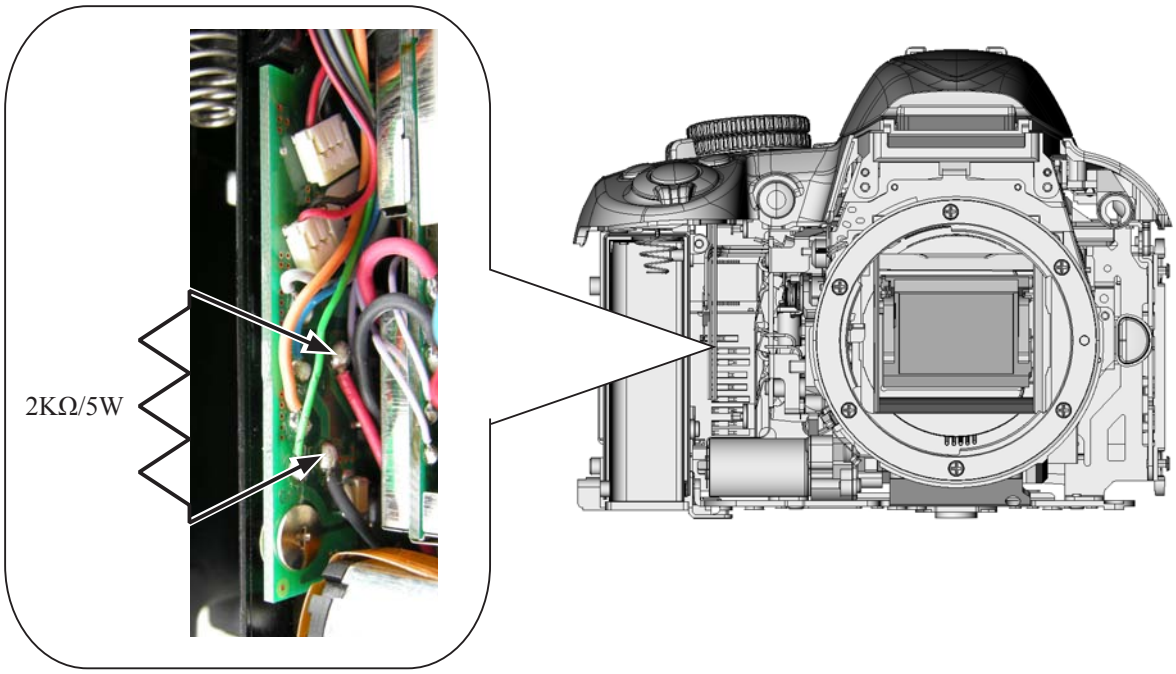

User ID:INC

Top cover unit

- Unsolder the four wires of the SB lower cover unit.
- Remove the harness and FPC.

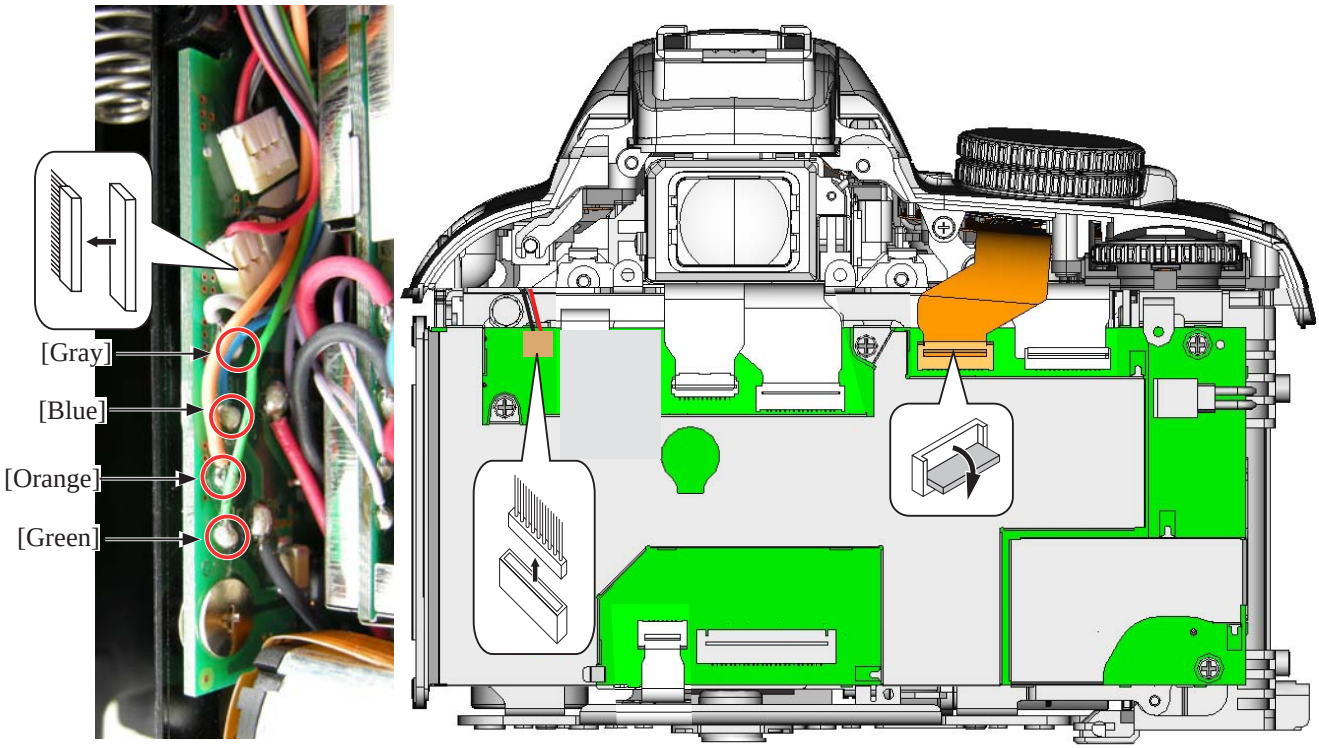

- Take out the screws (#631, #632, and #656).
- Remove the top cover.

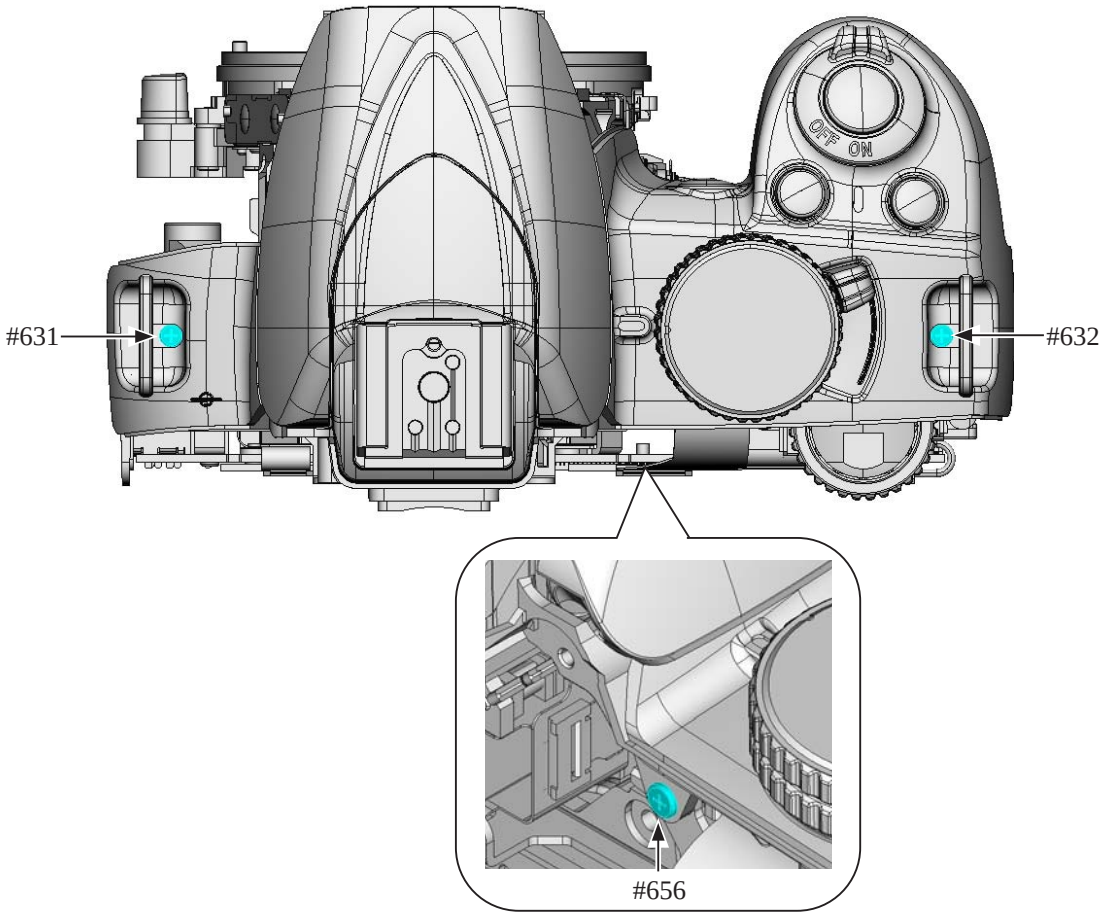

User ID:INC

2. Rear Cover

SD cover unit

- Remove the SD cover unit (#B431) from the rear cover unit.

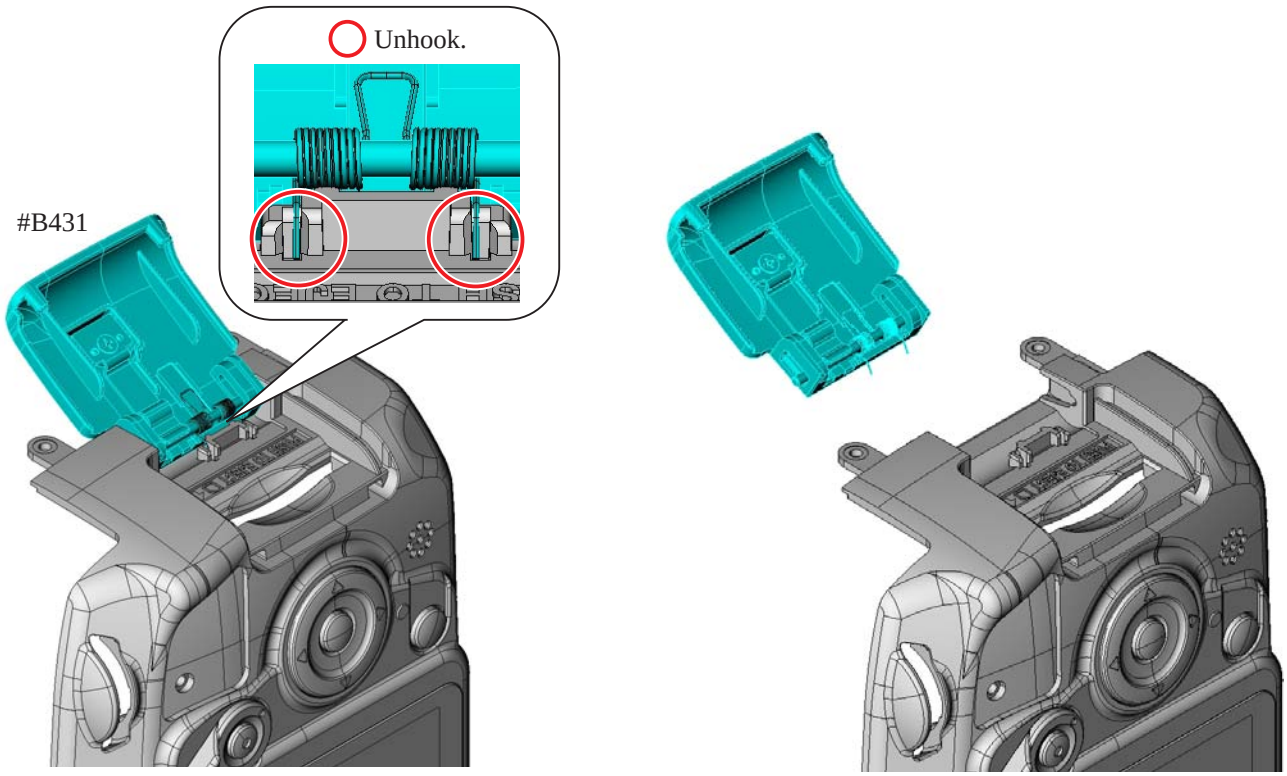

User ID:INC

LCD monitor cover

- Remove the LCD monitor cover (#402).
- Peel off the double-stick tape (#403).

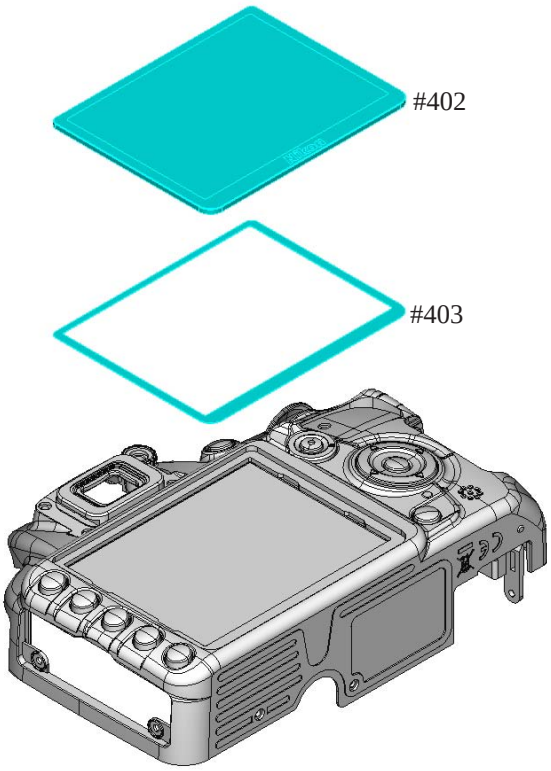

Eyepiece

- Take out the two screws (#624), and remove the eyepiece frame unit from the rear cover.
- Remove the sponge (#476) from the eyepiece frame (#475).
- Take out the screw (#621).
- Remove the retainer plate (#266).
- Remove the diopter adj. knob (#265).

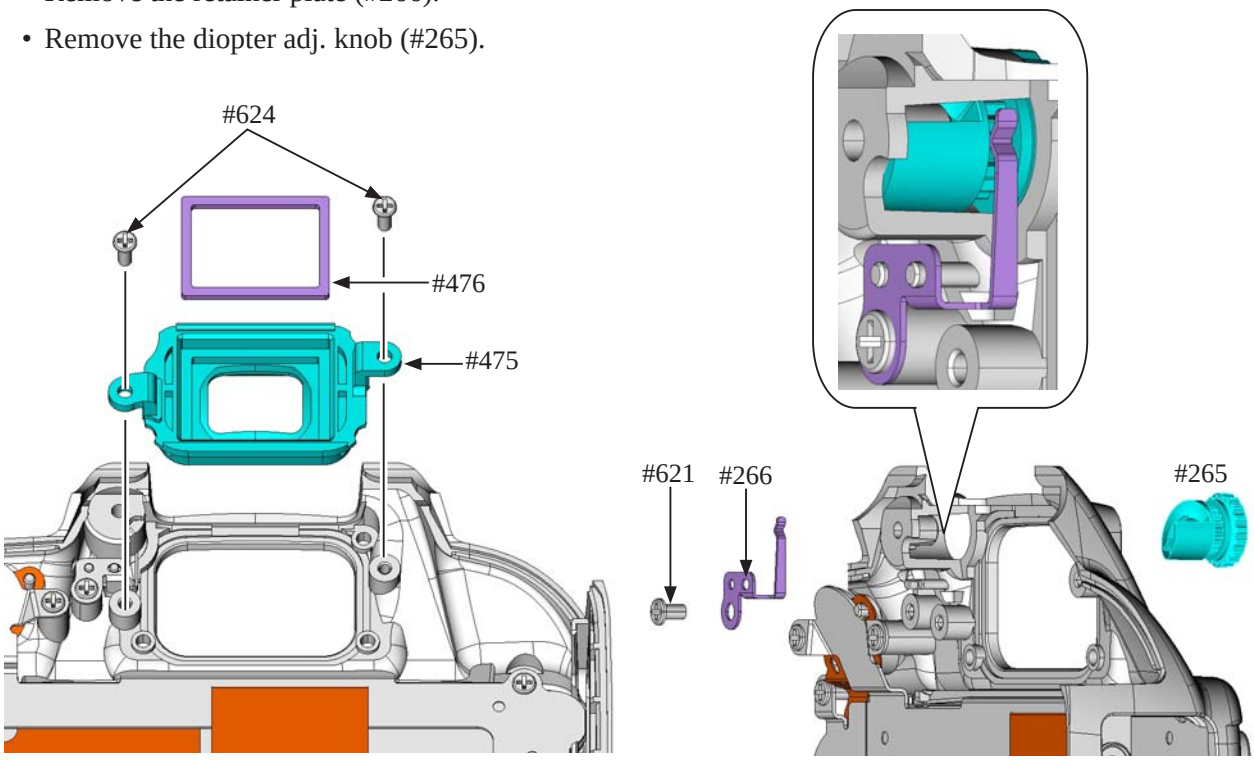

User ID:INC

Retainer plate

- Unsolder the two wires of the speaker (#1054).

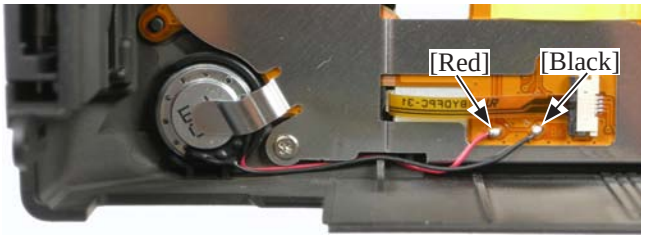

- Peel off the two pieces of the tape [TA-0005 (10×20)].
- Take out the nine screws (#621).
- Remove the retainer plate (#406).

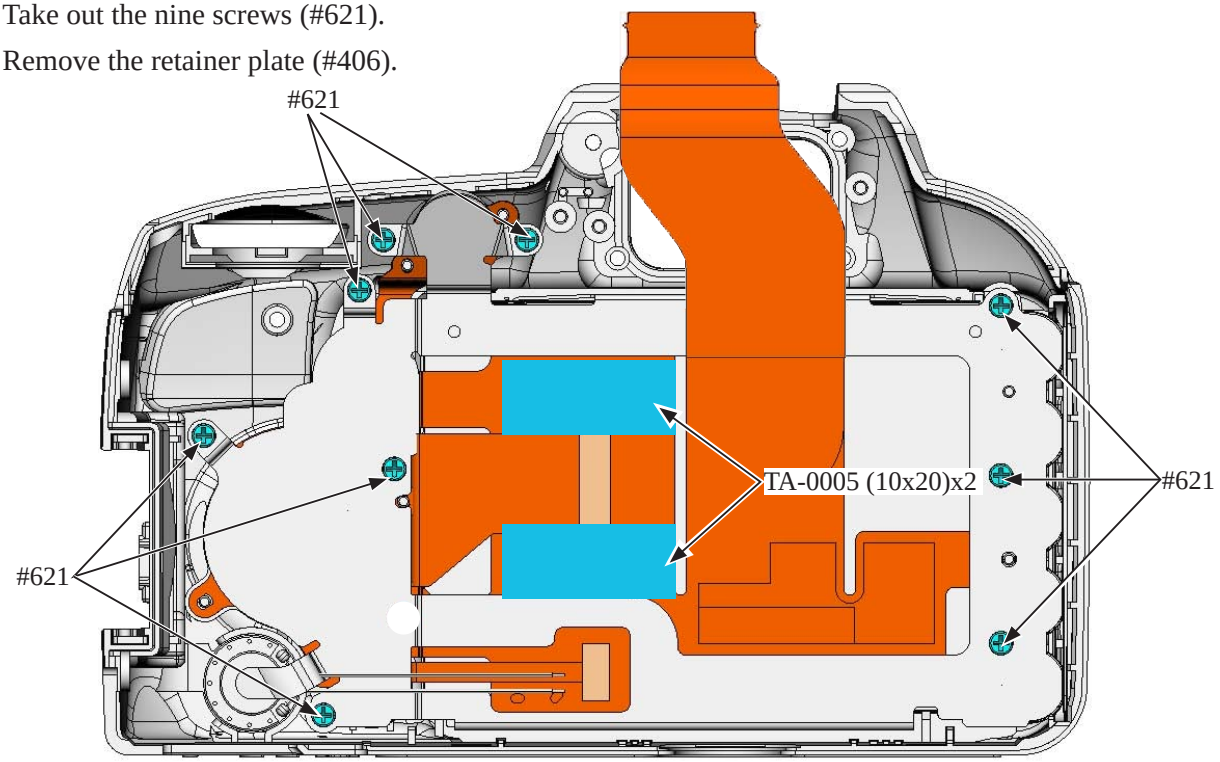

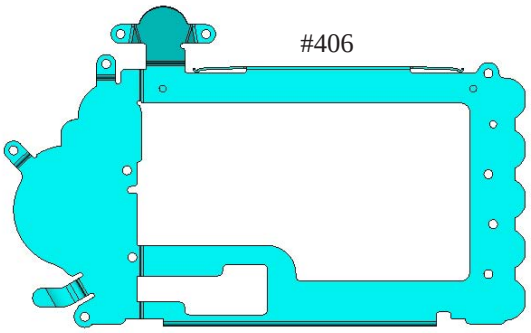

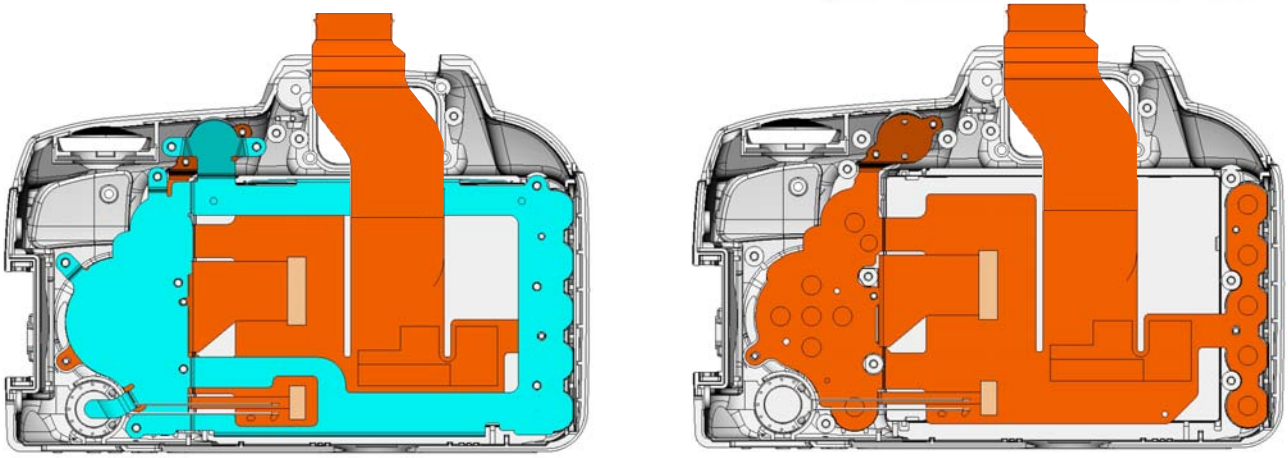

User ID:INC

Speaker

- Remove the speaker (#1054).

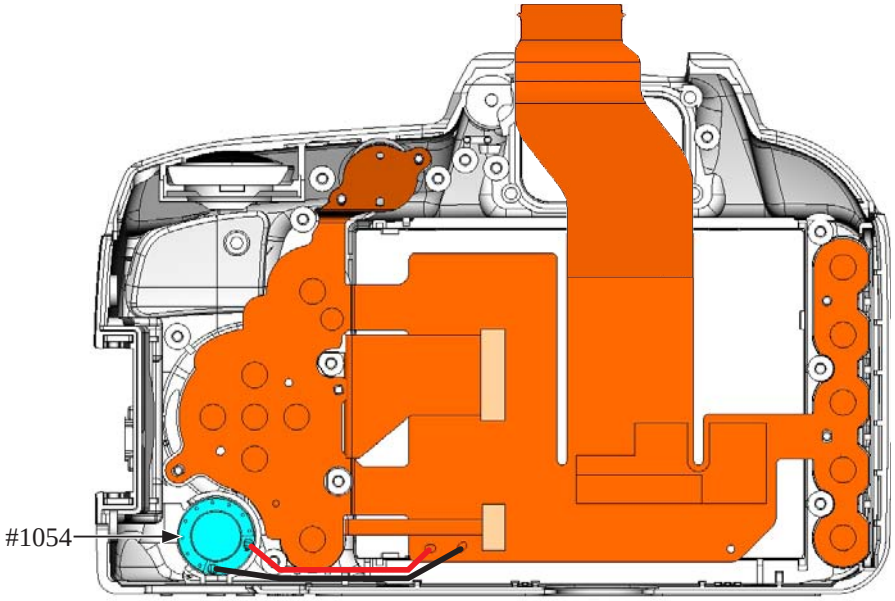

Rear FPC

- Disconnect the two FPCs.
- While slacking the FPC (see below) of the LCD monitor (#1049), remove the rear FPC unit (#B1016).

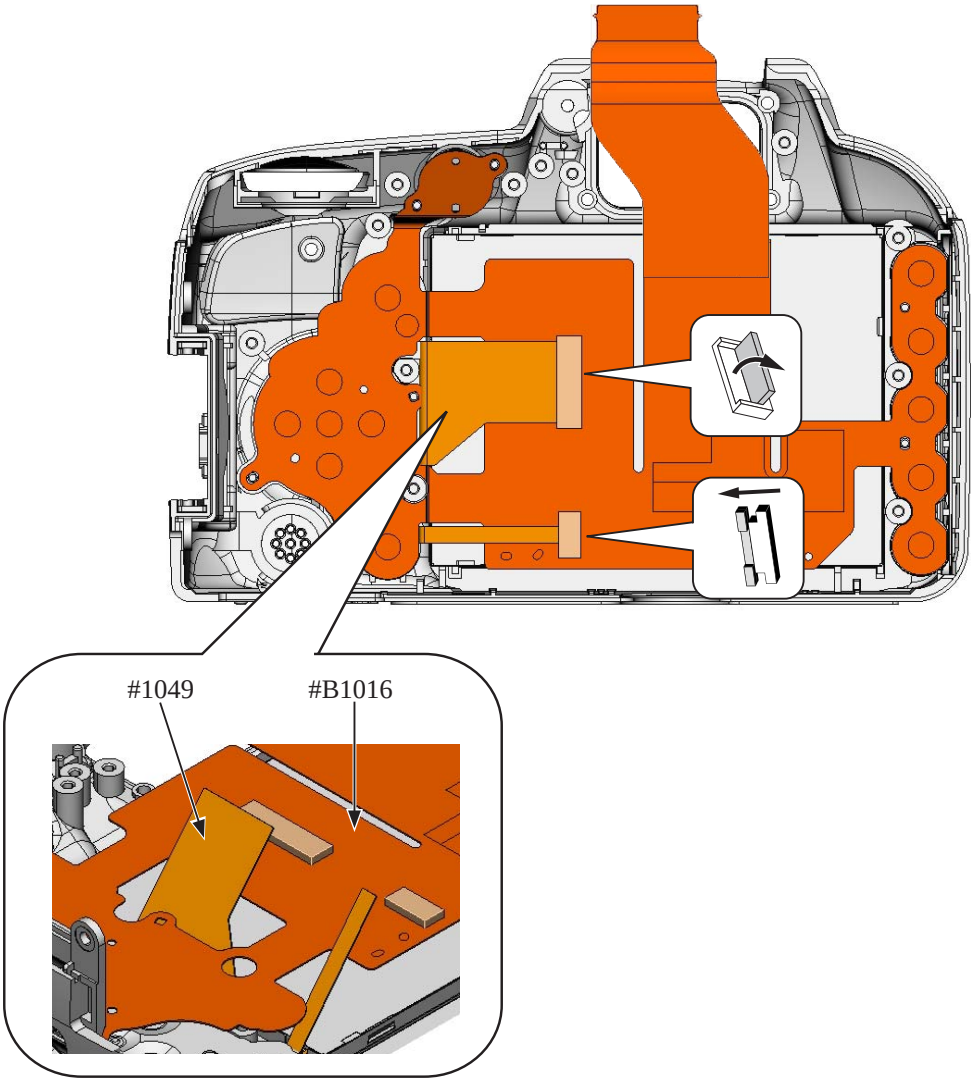

User ID:INC

LCD monitor

- Remove the LCD monitor (#1049).

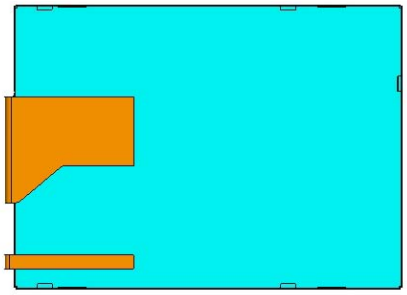

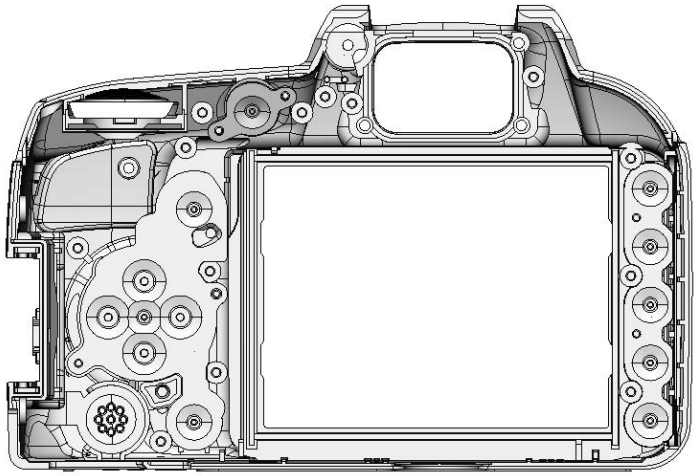

Rear button

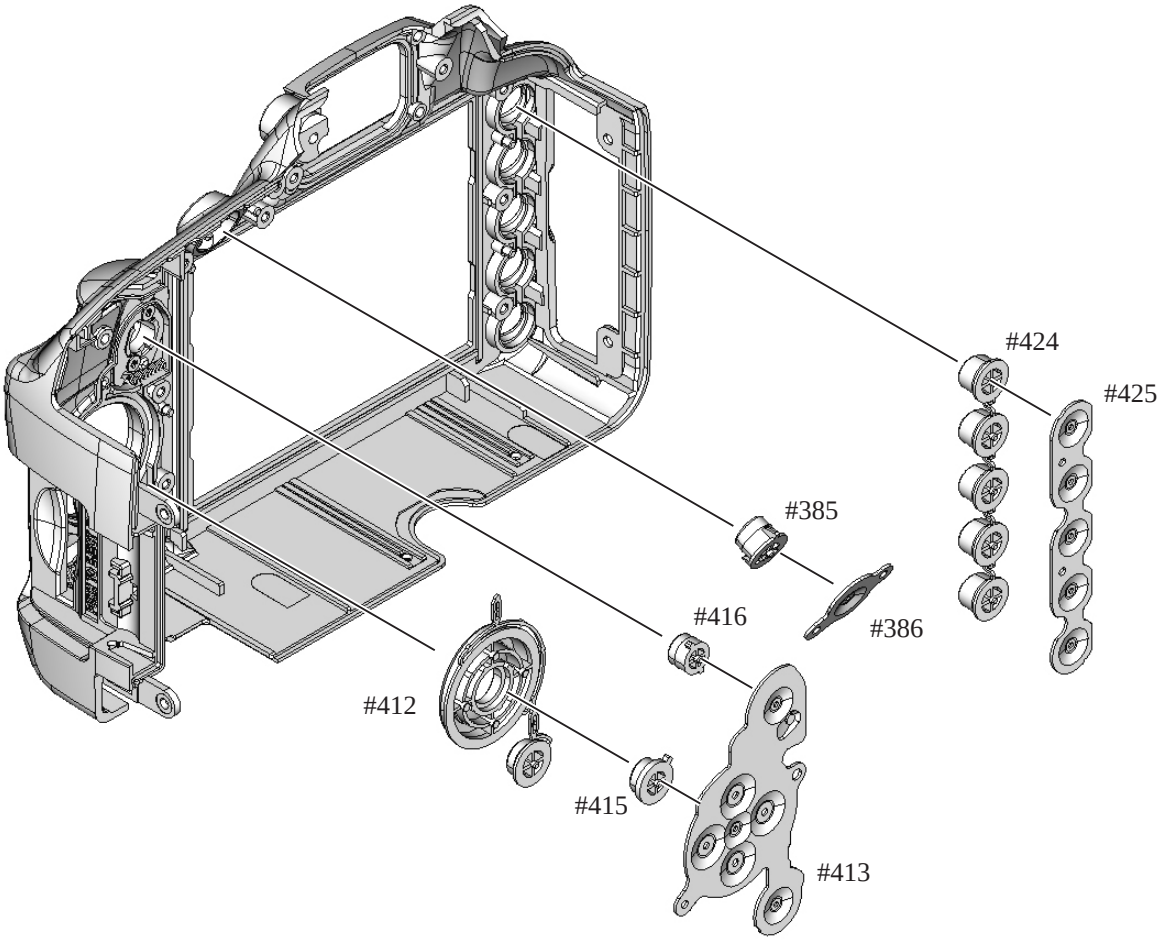

User ID:INC

LV lever

- Take out the two screws (#619).
- Remove the retainer plate (#471), spring (#472), and LV lever (#470).

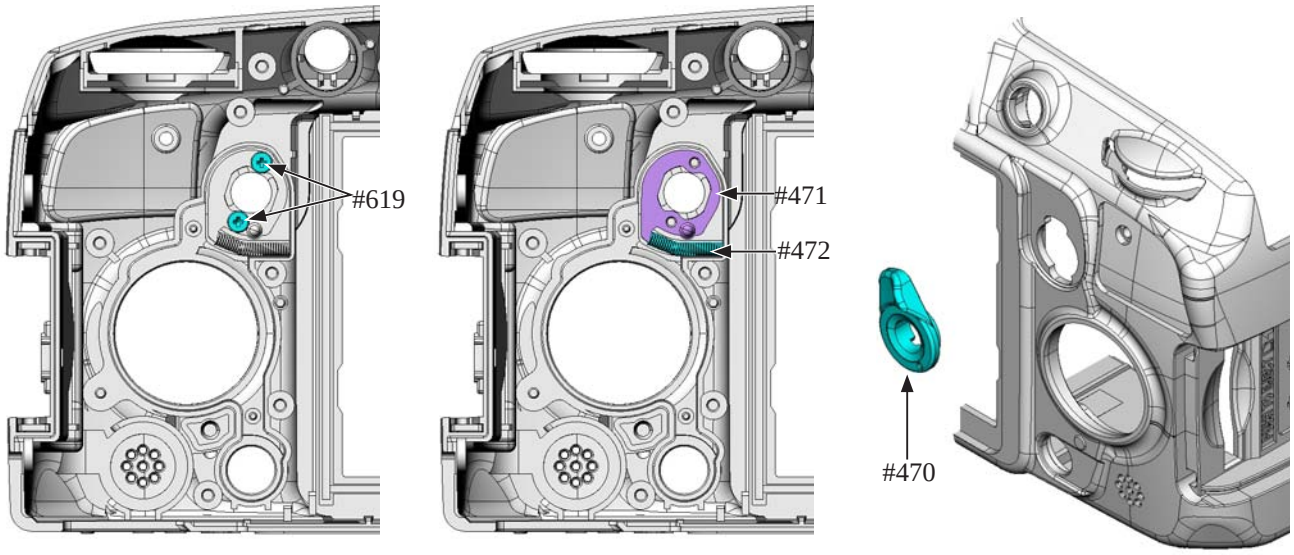

TFT sponge

- Remove the two sponges (#404) and two sponges (#405).

SD access lamp window

- Remove the adhesive (EDC0021), then remove the SD access lamp window (#408).

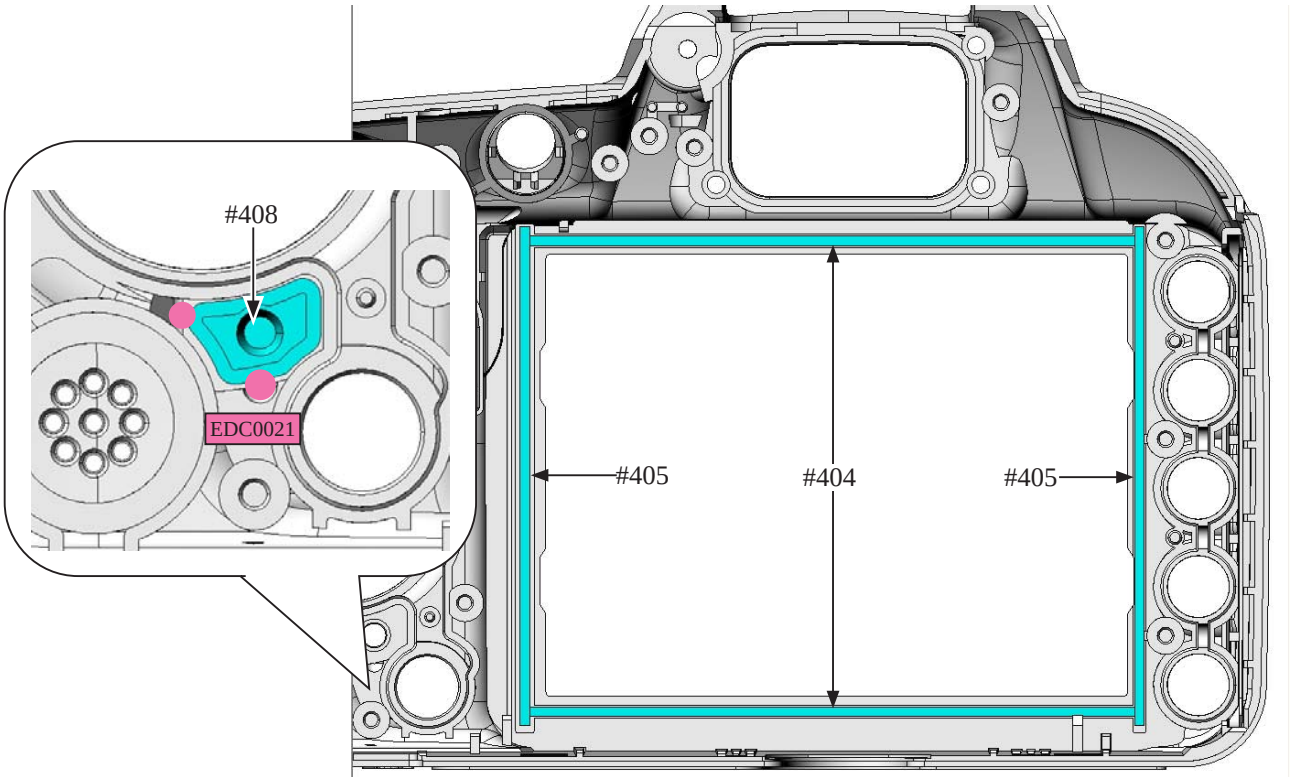

User ID:INC

3. Top Cover

SB release PCB unit

- Remove the "Super X" (C-8008B), then remove the microphone (#1053).

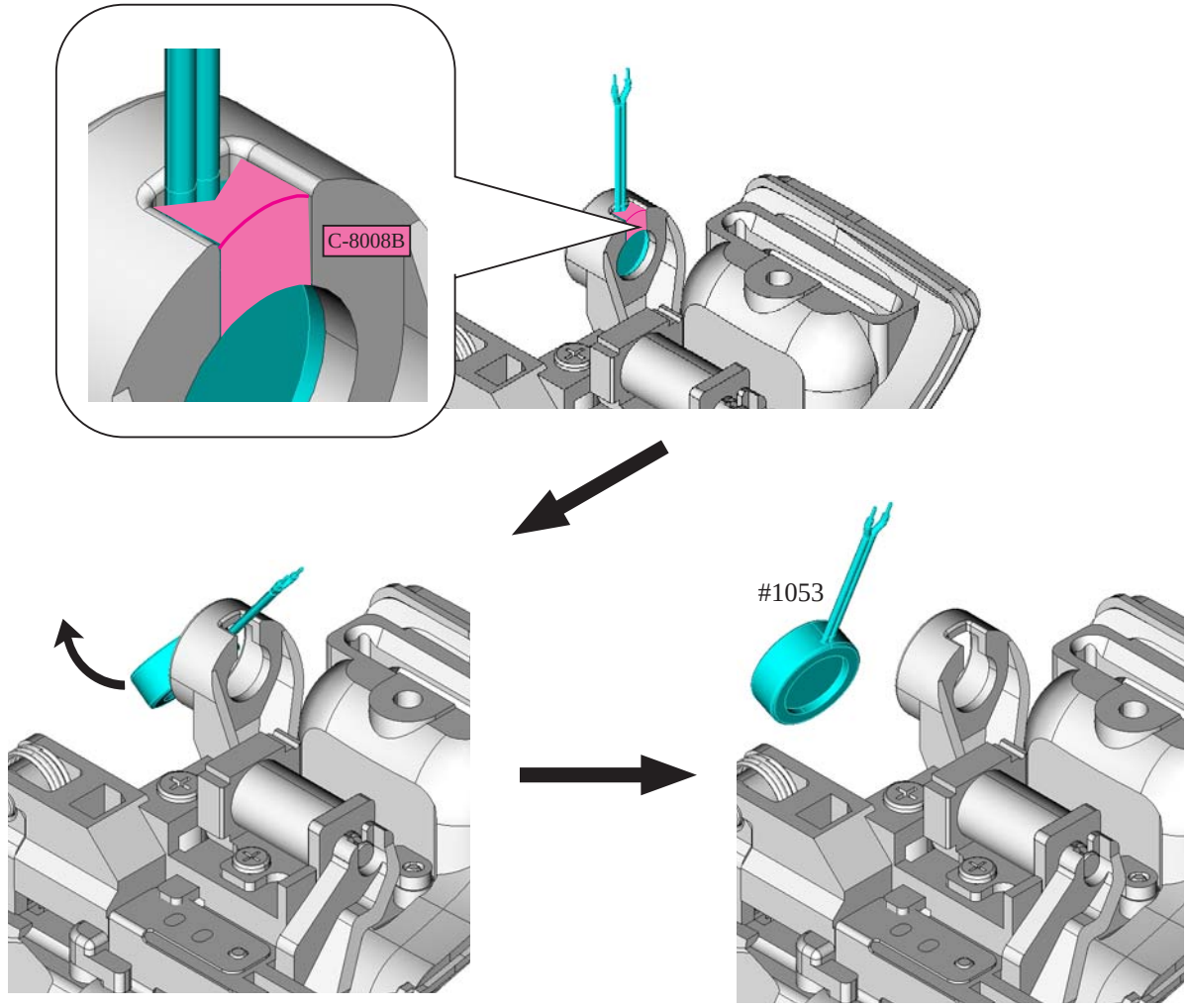

- Unsolder the two wires.
- Take out the screw (#618), and remove the driving magnet (#36).

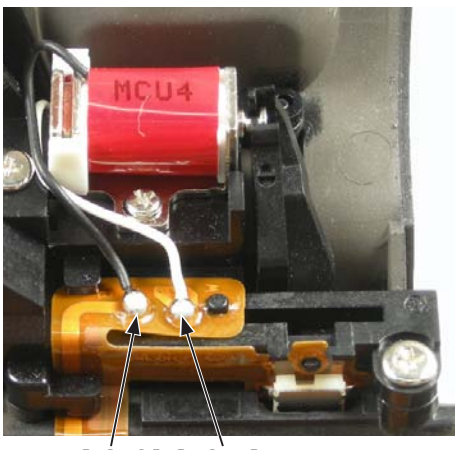

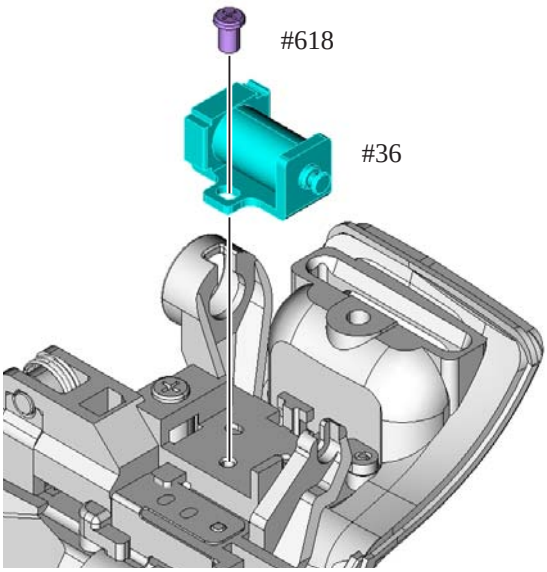

User ID:INC

- Take out the three screws (#617).
- Unhook the top cover FPC unit (#B1007) in the numeric order from ① to ③ , and then remove the SB release PCB (#455).

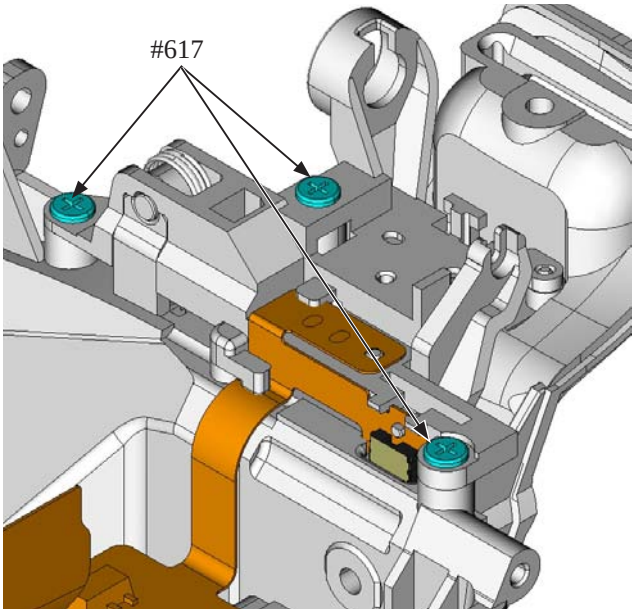

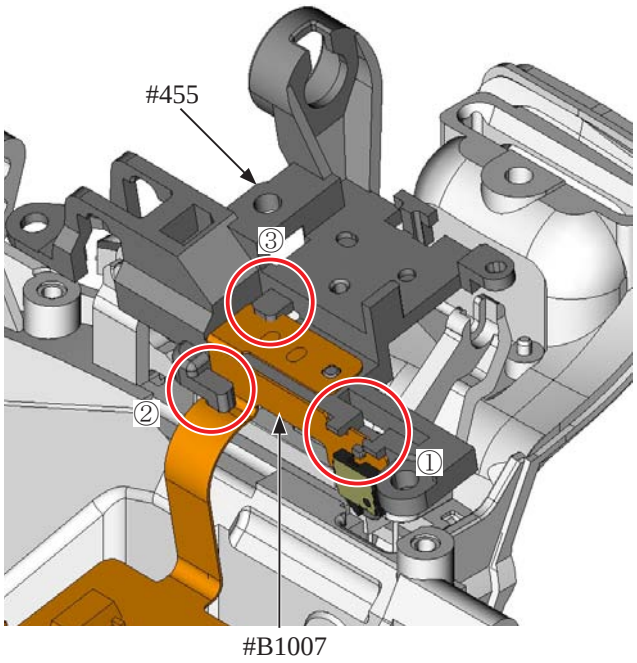

- Remove the SB release lever (#456).
- Remove the SB lock lever (#309) and spring (#458) together.
- Remove the spring (#458) from the SB lock lever (#309).

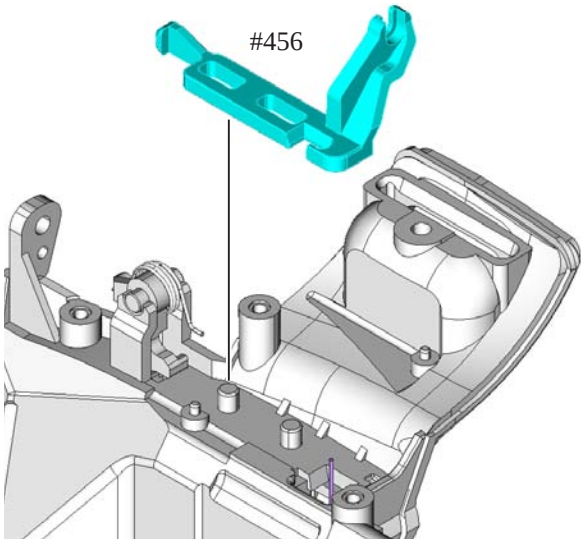

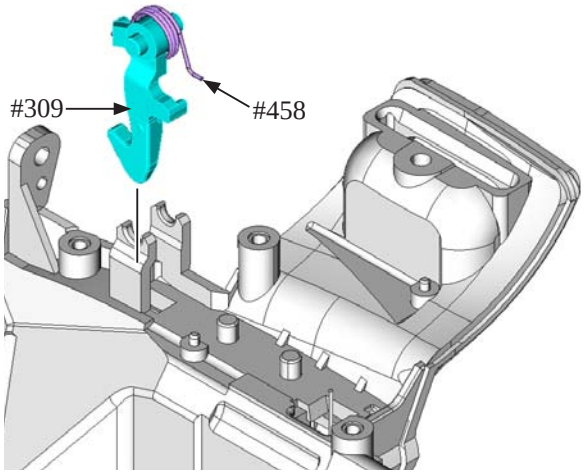

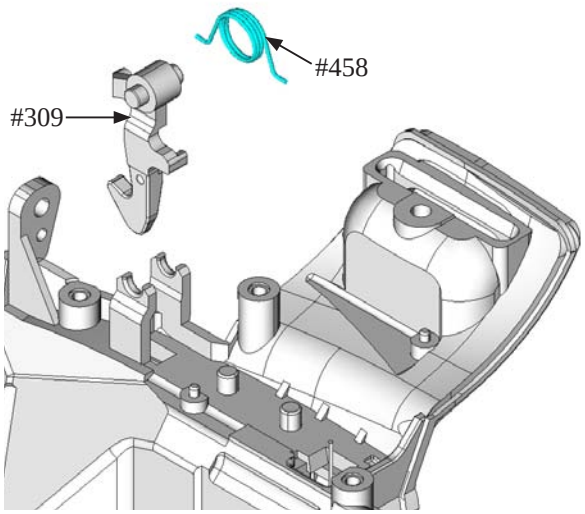

User ID:INC

SB upper cover

- Take out the two screws (#628).
- Remove the SB upper cover (#301).

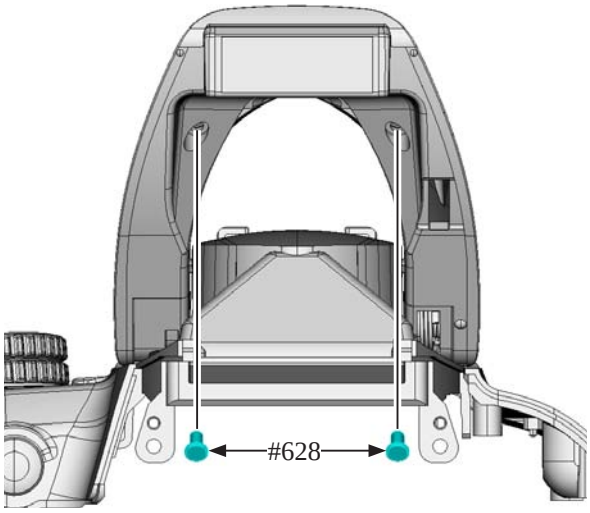

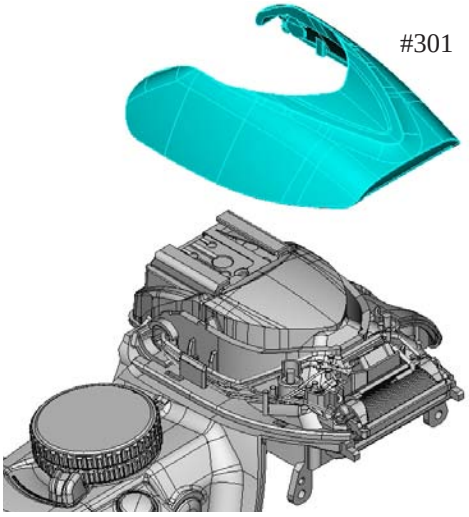

SB lower cover unit

- Unhook the spring (#305).
- Unhook the spring (#459) and spring (#305).

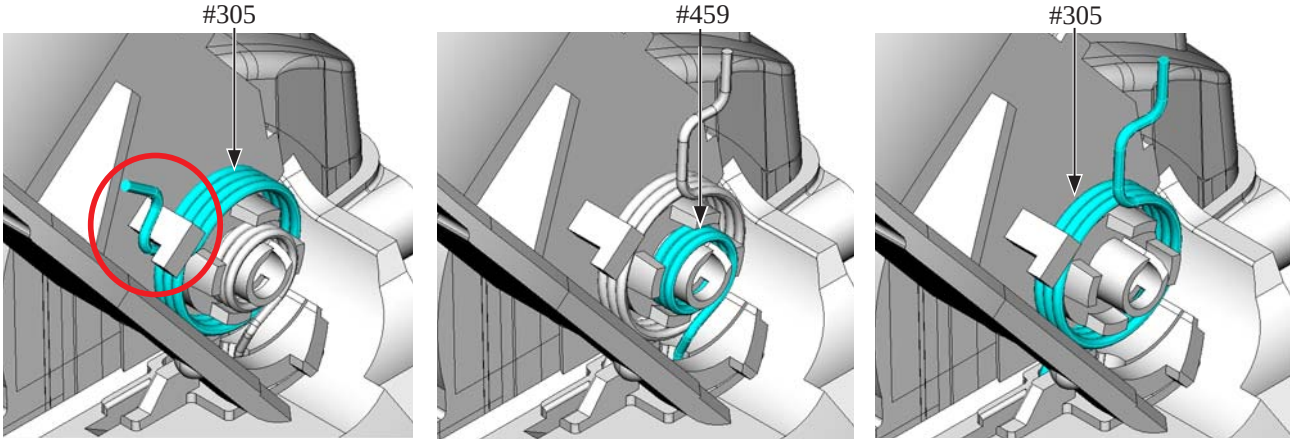

- Unsolder the two wires.
- Release the four wires from the four guides.

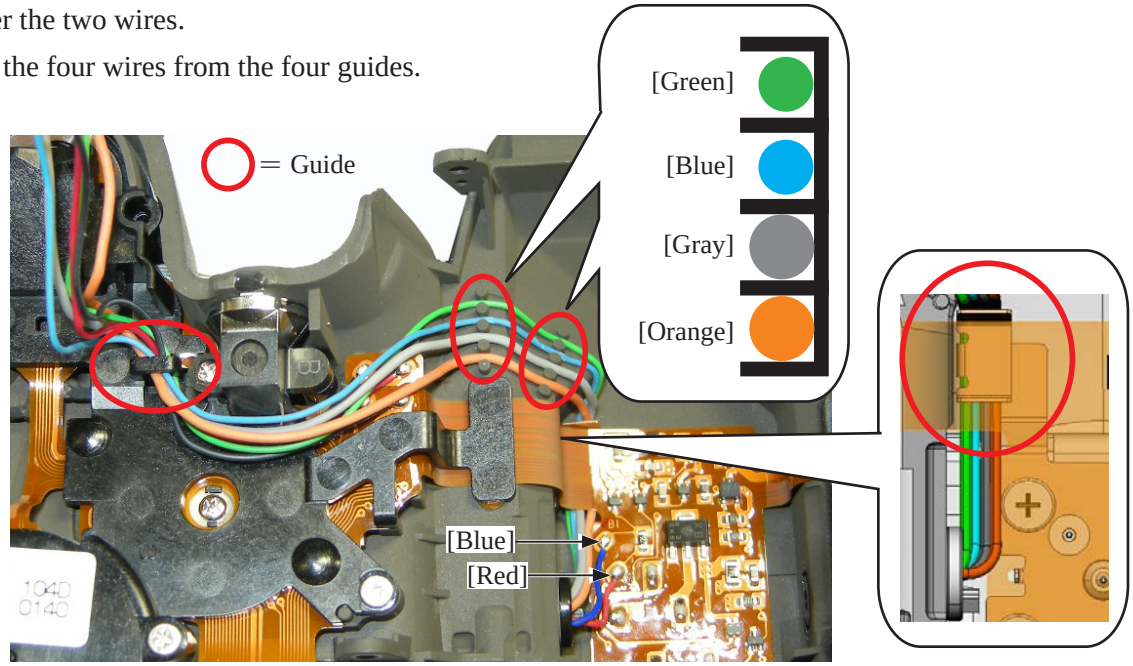

User ID:INC

• Pull out the wires.

• Remove the roller (#308) while releasing the hooks.

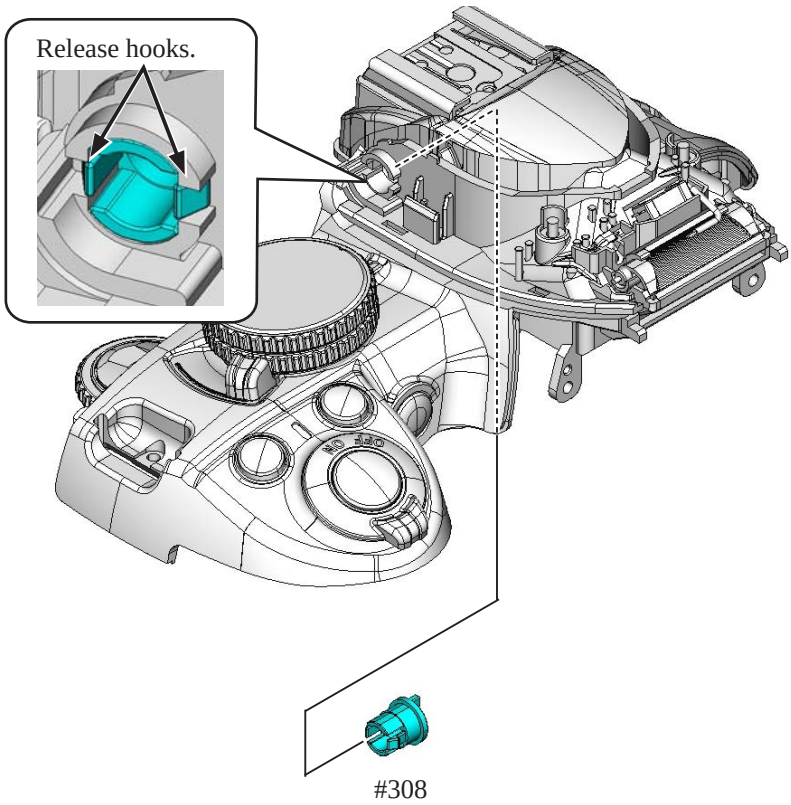

• Remove the SB lower cover unit (#B302).

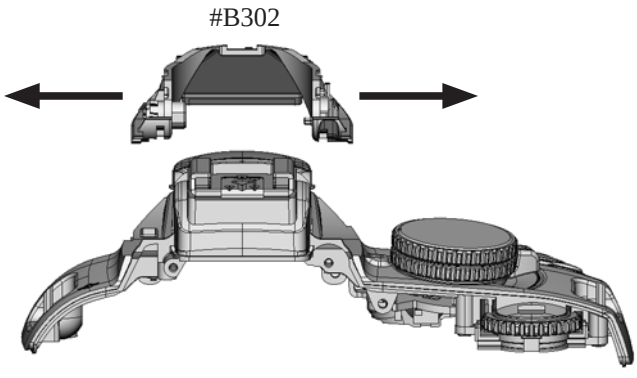

User ID:INC

AF assist lamp unit

- Unsolder the two wires of the harness (#1027).

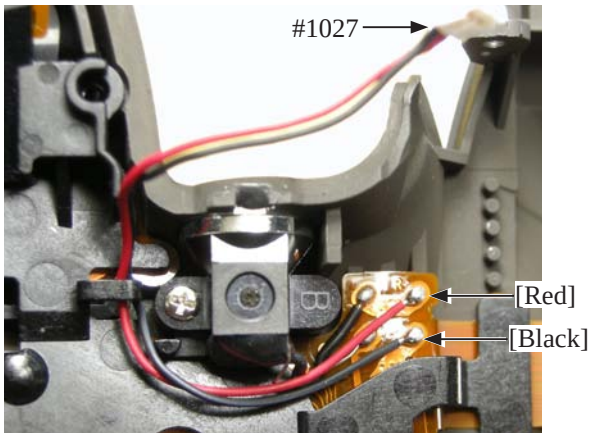

- Unsolder the two wires of the AF assist lamp unit (#B325).
- Take out the screw (#629), and remove the AF assist lamp unit (#B325).

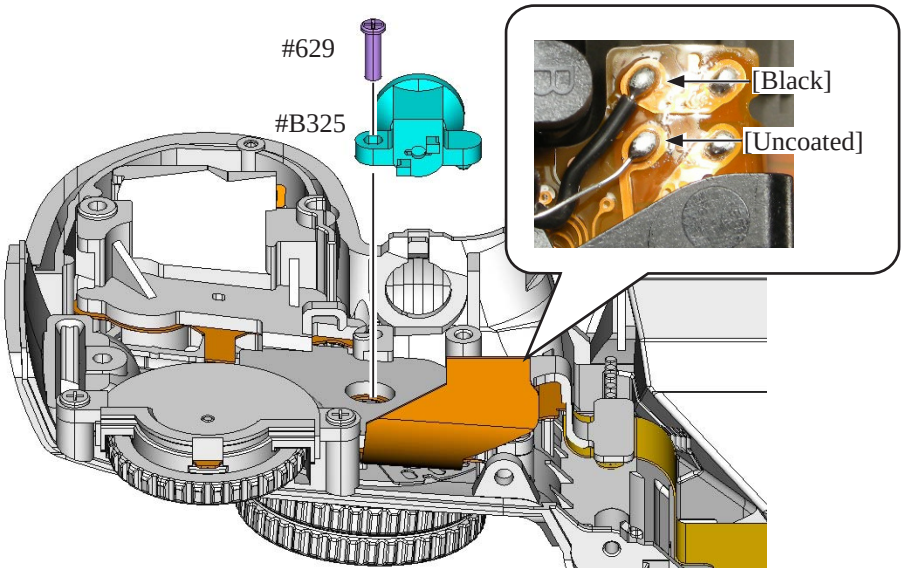

User ID:INC

Top cover FPC unit

- Remove the five solders of the hot shoe.
- Take out the three screws (#617).

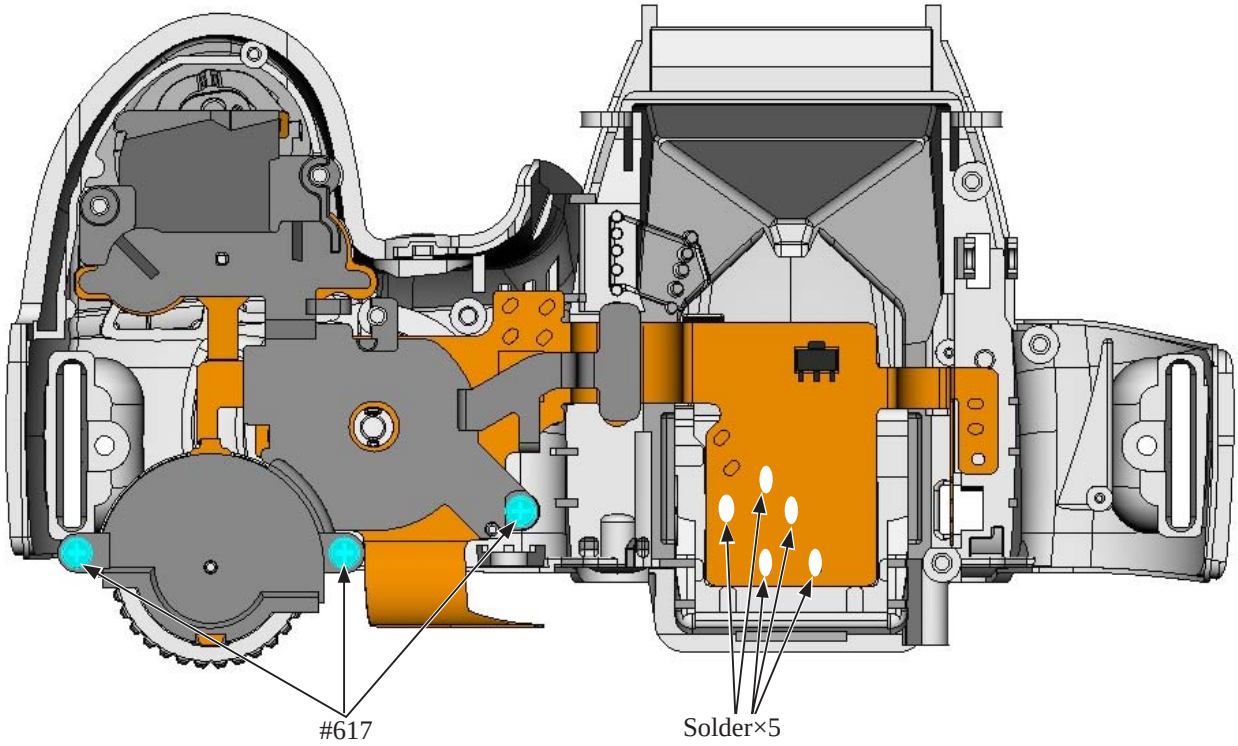

- Remove the top cover FPC unit (#B1007).

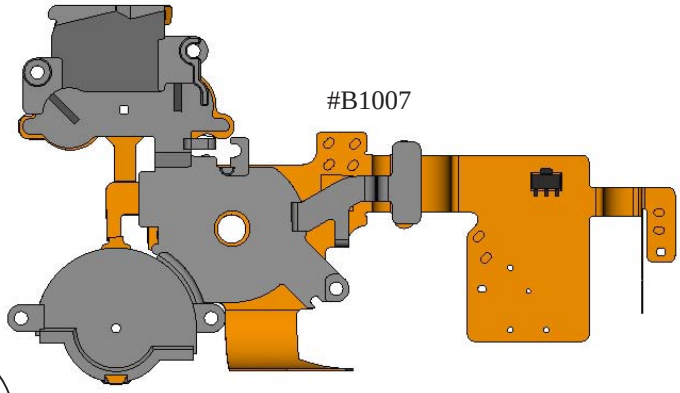

Caution: When the top cover FPC unit is removed, be careful that the inner click spring (#361) and click ball (#362) in the command dial may pop out.

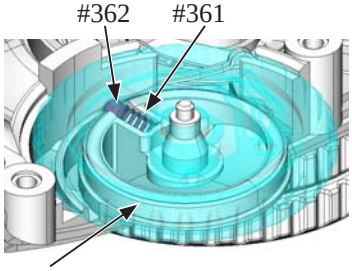

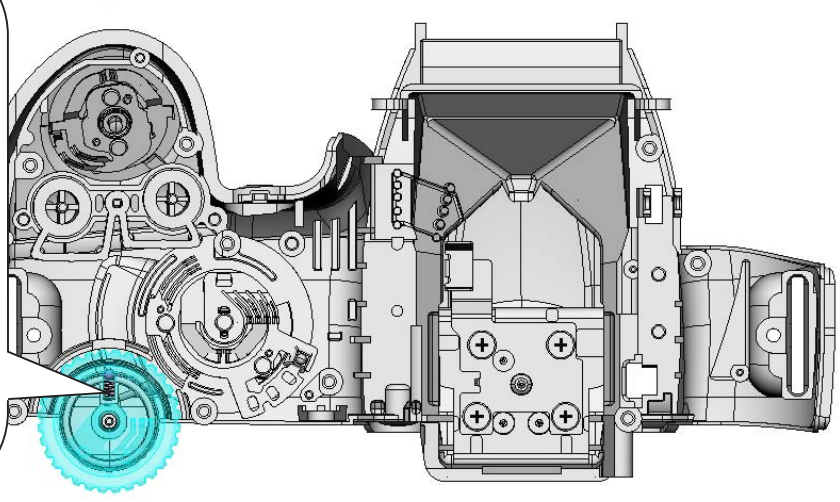

User ID:INC

Command dial unit

- Remove the command dial unit (#B360).
- Remove the click ball (#362) and click spring (#361).

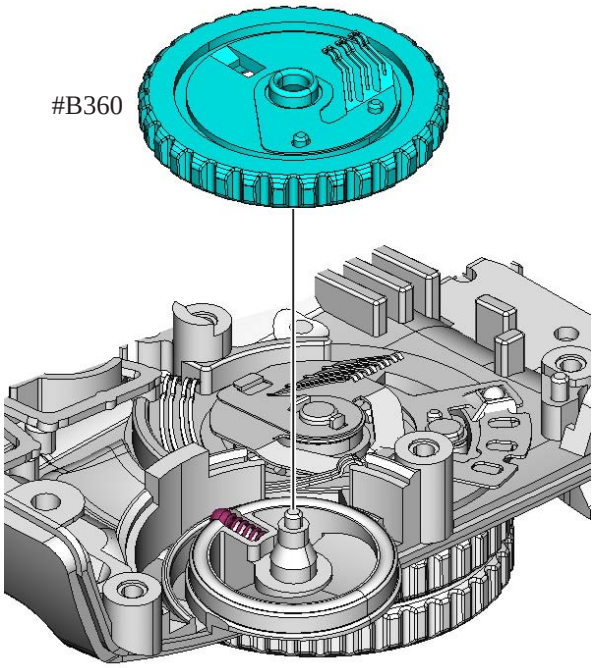

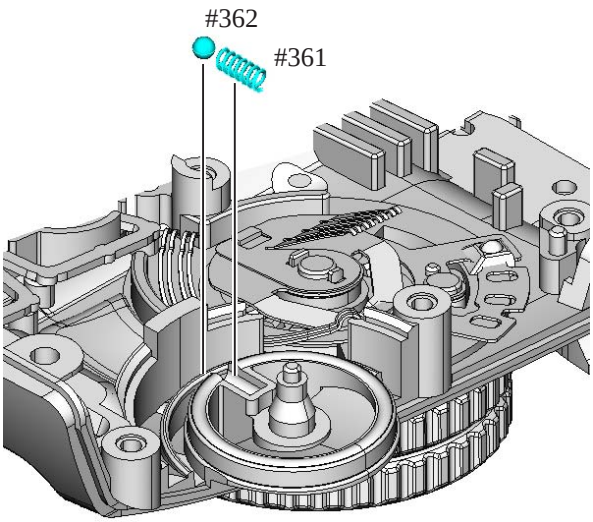

Info & "+ -" aperture button

- Remove the button (#381).

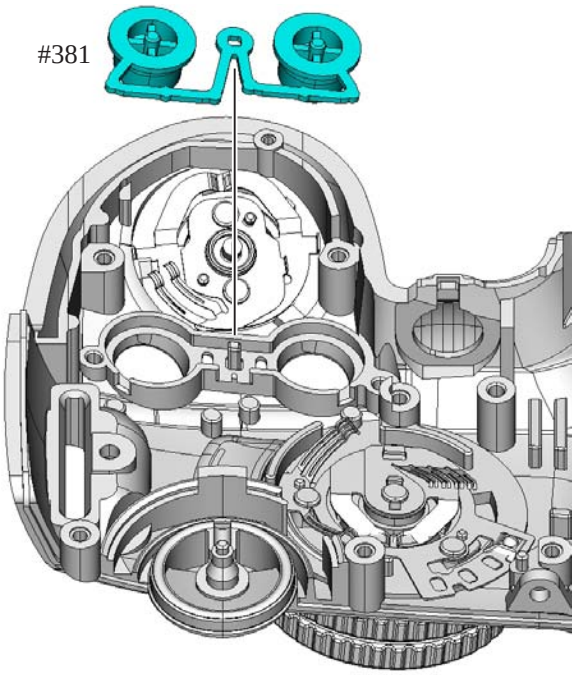

User ID:INC

ON-OFF dial

- Take out the two screws (#615).
- Remove the ON-OFF SW brush (#348) and ON-OFF click plate (#347).
- Remove the power dial unit (#B345).

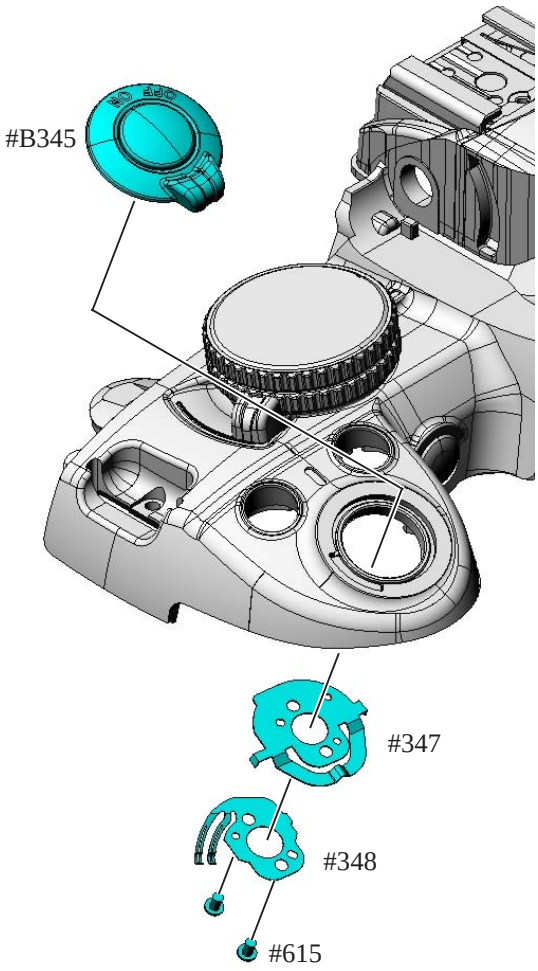

User ID:INC

Mode dial unit

- Take out the screw (#616).
- Remove the contact brush (#372) and click spring (#373).
- Remove the mode dial unit (#B371).

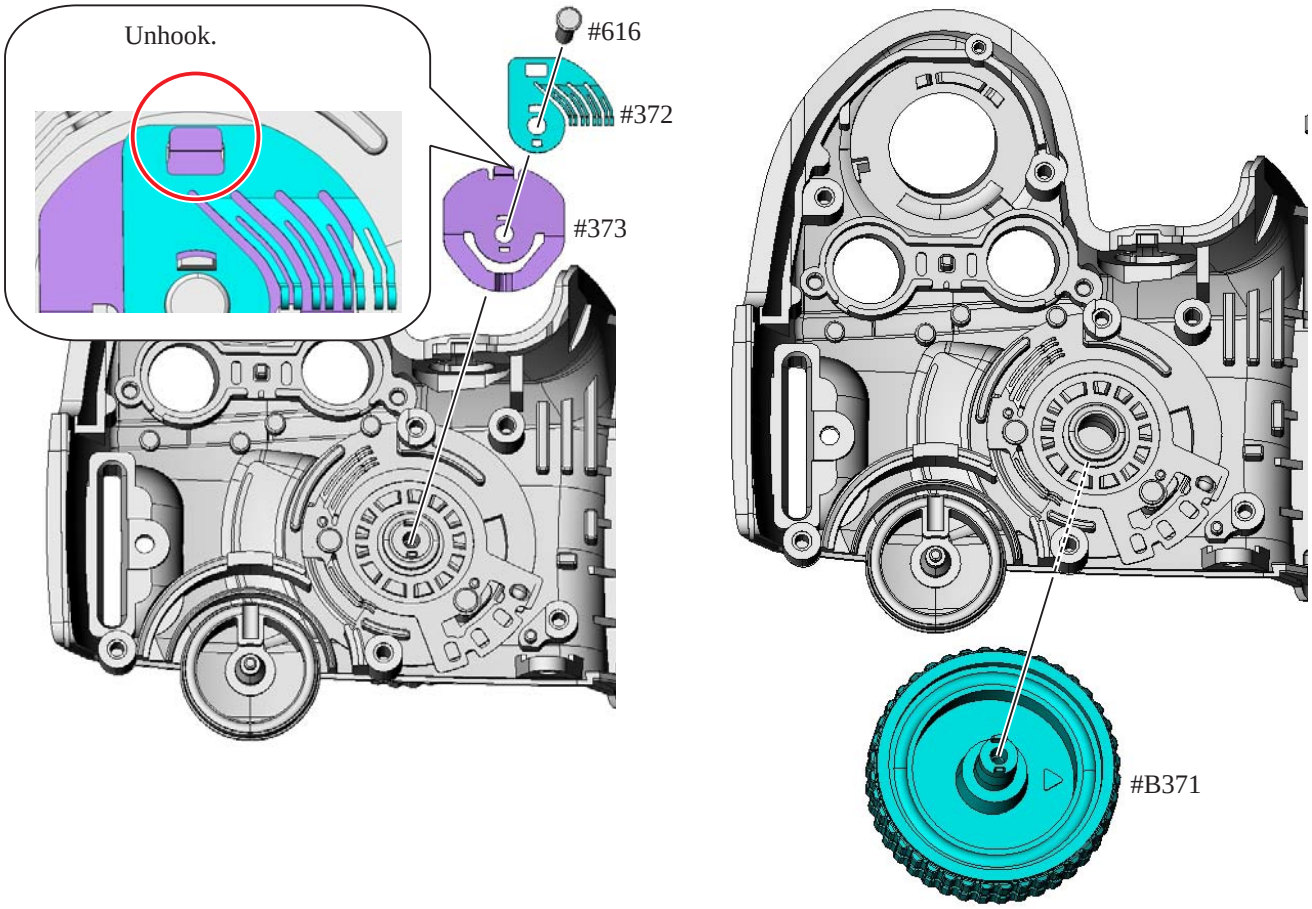

- Take out the two screws (#663).
- Remove the contact brush (#375), click ball (#362), and release mode dial (#374).

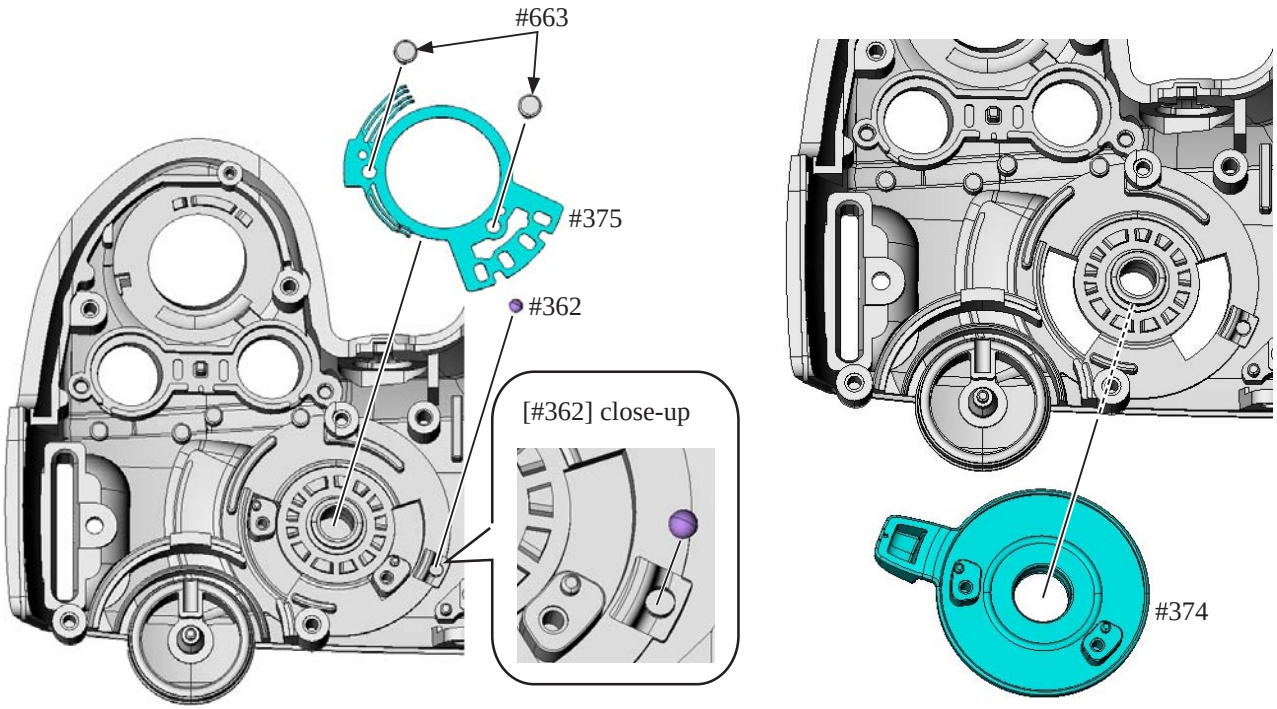

User ID:INC

Hot shoe

- Take out the four screws (#627).
- Remove the holder plate (#322), hot shoe spring (#318), hot shoe (#316), and hot shoe mold unit (#B317).

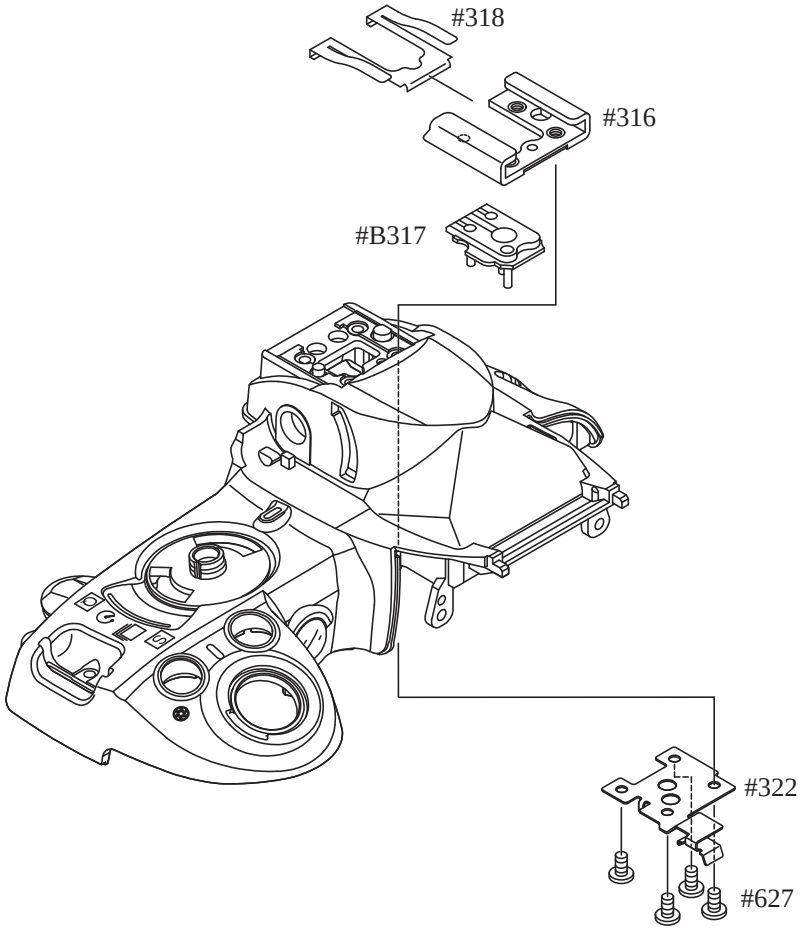

User ID:INC

Prism box unit

Note:The prism box unit can be disassembled until the stage shown from page D26 to D28, Further disassembly can not be made. (ref. parts list)

- Disconnect the two FPCs.
- Take out the two screws (#613).

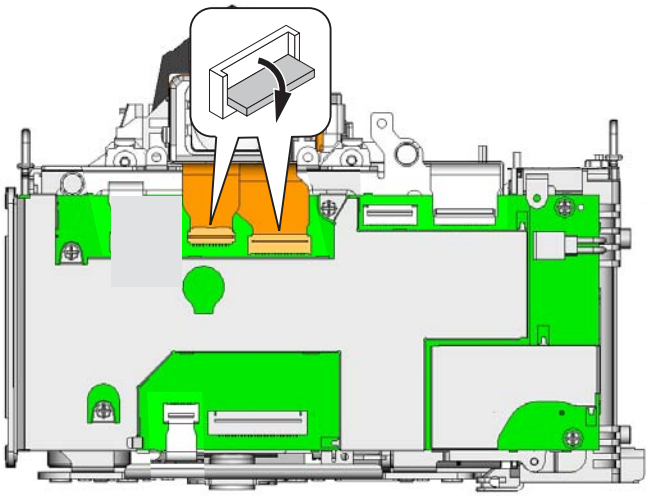

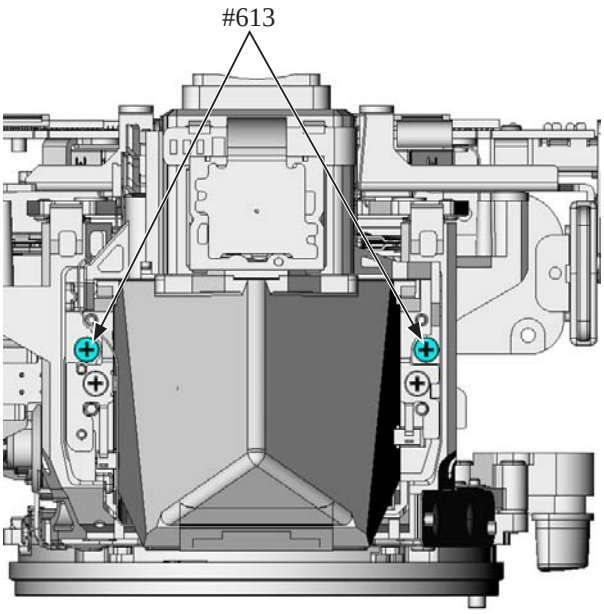

- Remove the prism box unit.

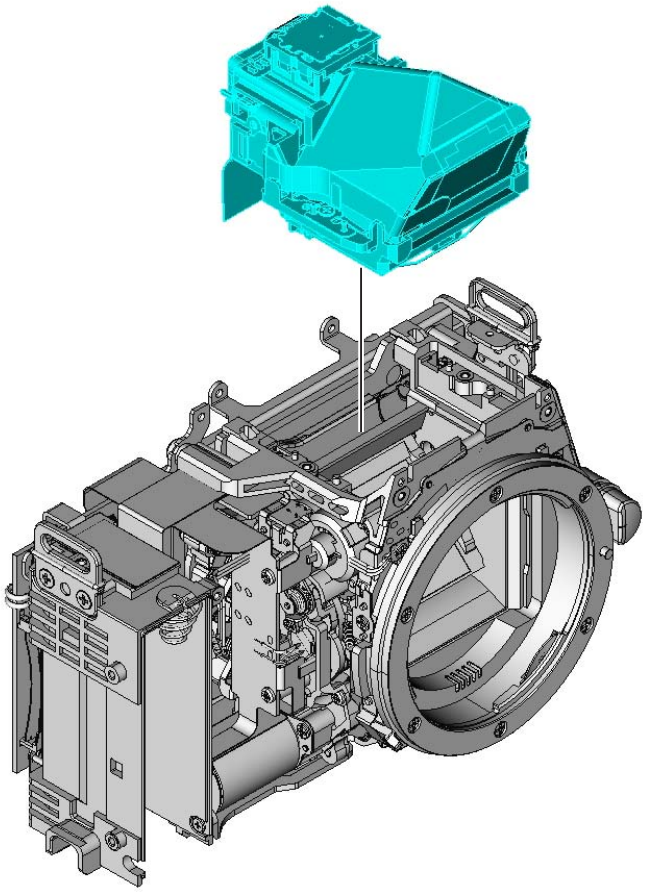

User ID:INC

Screen

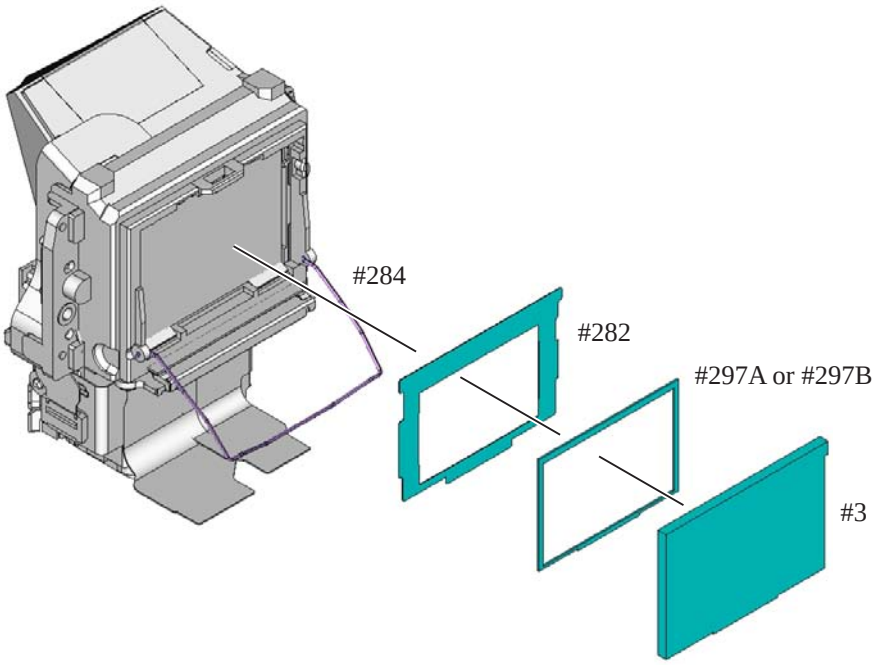

SI (super impose) display plate

- Remove the rubber (#281).
- Remove the SI display plate (#13A).
- Remove the rubber (#285).

Caution: The SI display plate (#13) tends to be scratched easily, so do NOT wipe it out with alcohol. If dust or dirt is attached, blow it with a blower.

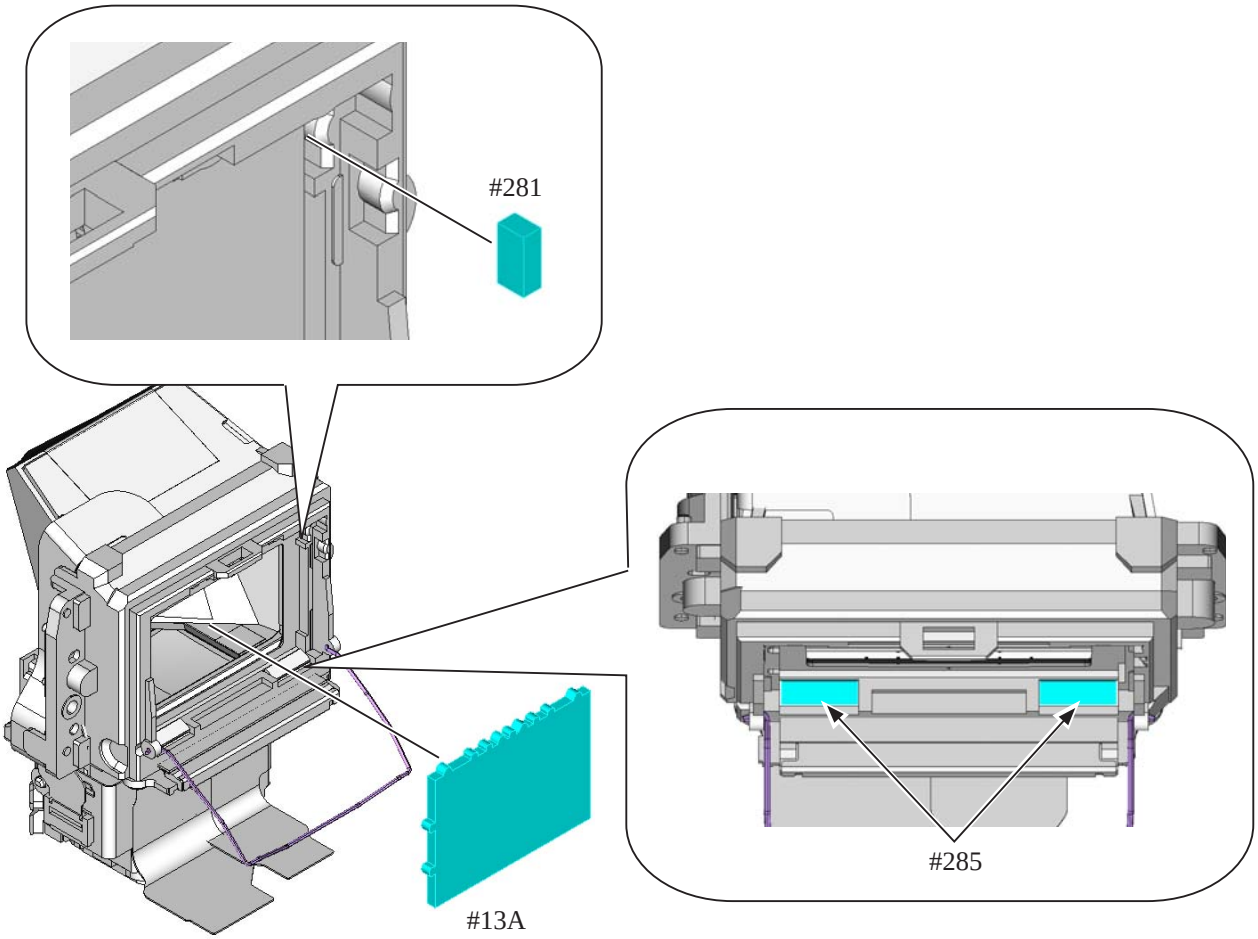

User ID:INC

LCD unit

- Take out the two screws (#650).
- Remove the LCD unit (#B1045) and tape (#291).

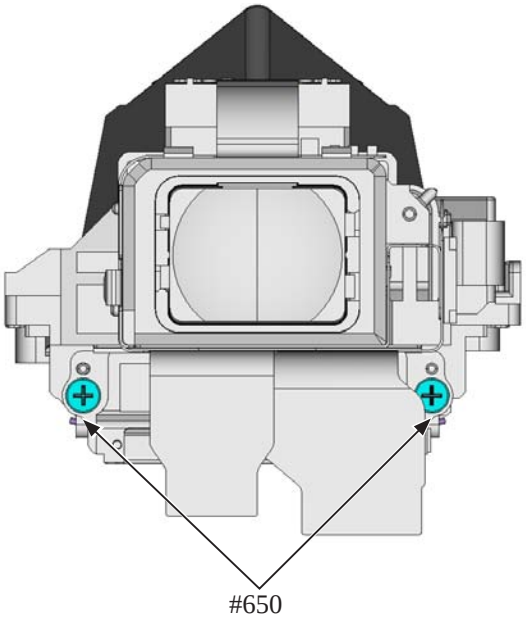

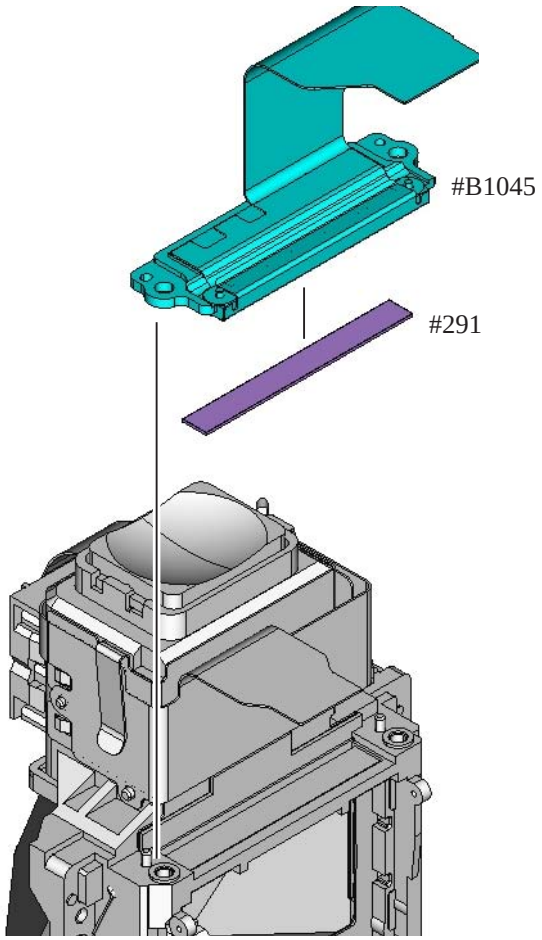

G7 lens unit

- Disconnect the FPC's one end of the AE-CCD, and remove the other end from the shading plate (#271).
- Peel off the double-stick tape [TA-0026 (4.5×4.5)].

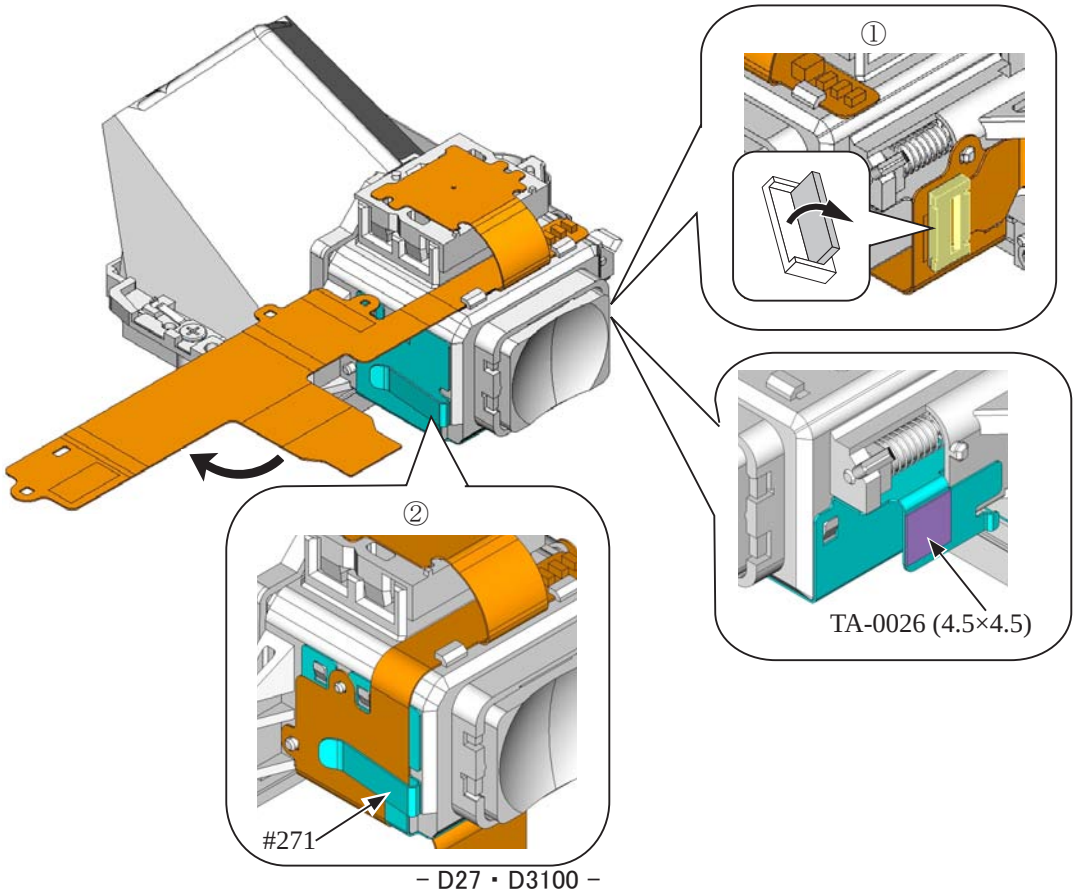

User ID:INC

• Remove the shading plate (#271) and sponge (#293).

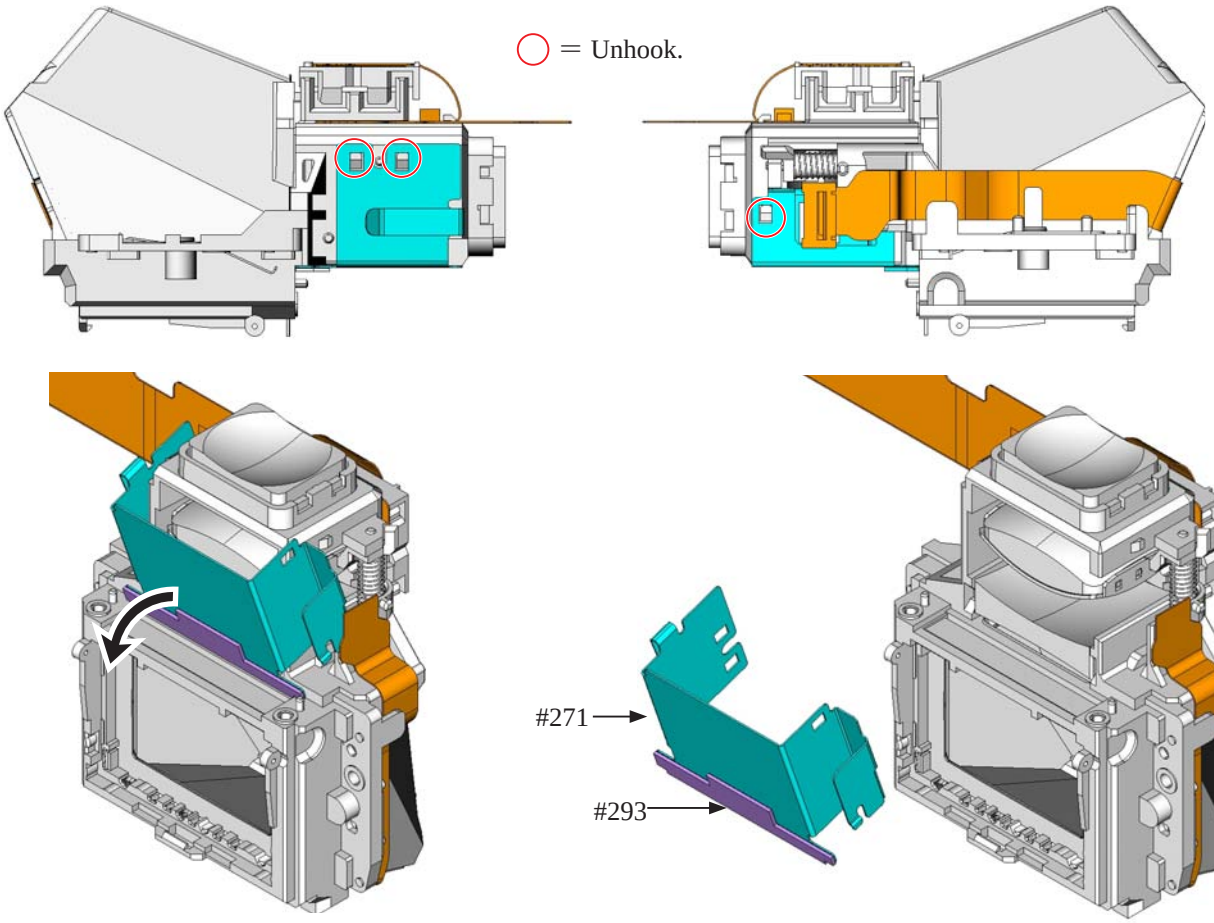

• Pull out the pin (#262).
• Remove the G7 lens unit.

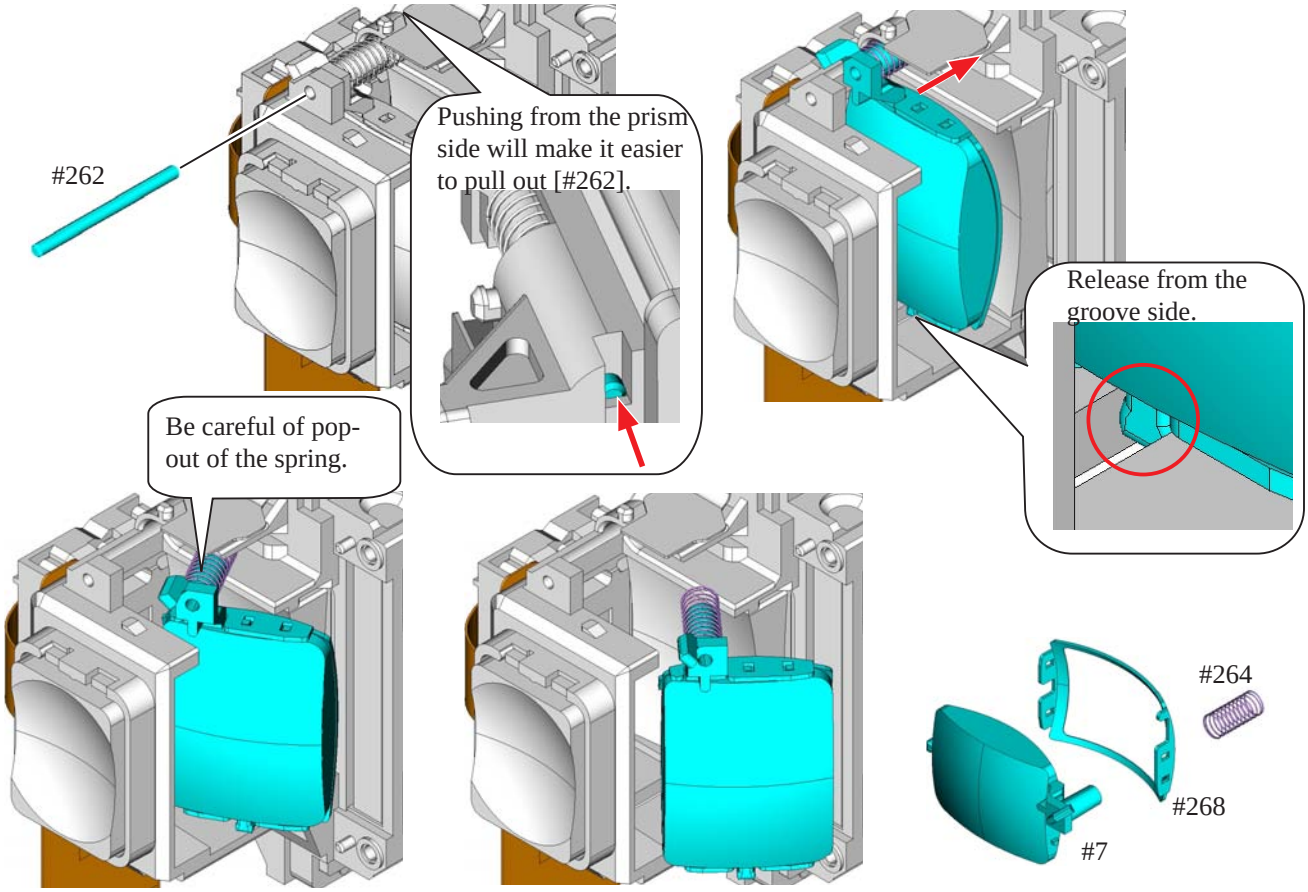

User ID:INC

4. Sub-frame (tentative)

Main condenser

- Peel off the tape [TA-0015 (13×28)].
- Unsolder the two wires from the main condenser (#1043).
- Remove the main condenser (#1043).
- Peel off the double-stick tape (#141).

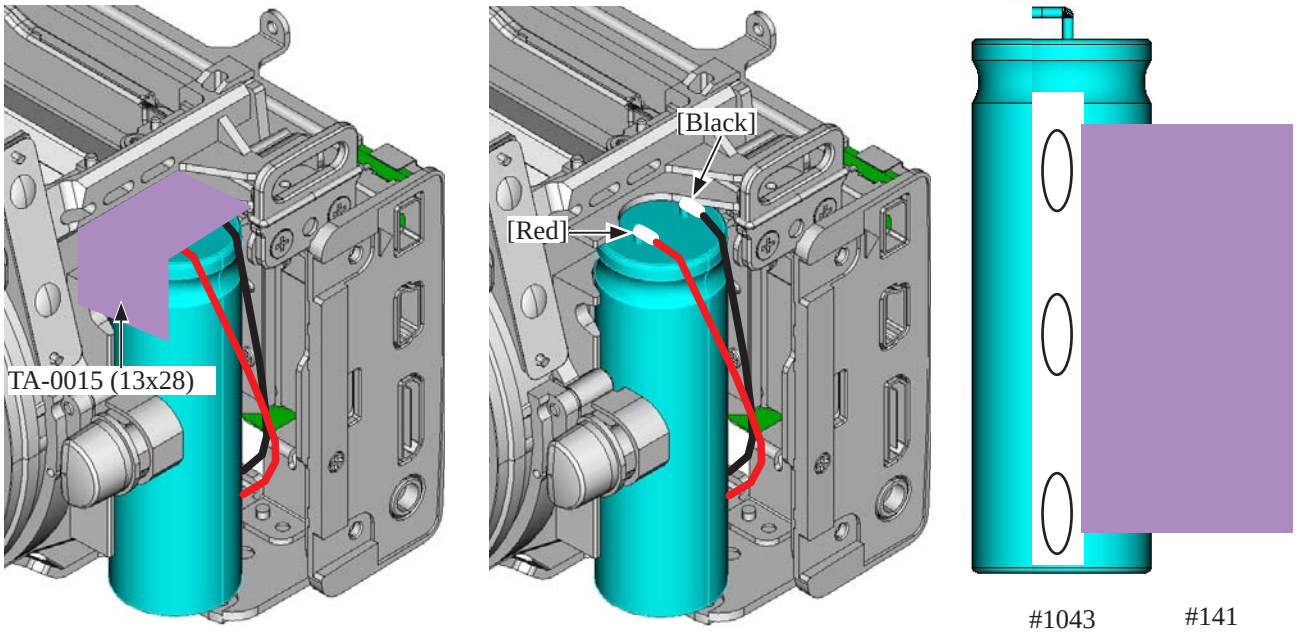

IF holder

- Take out the screw (#633).
- Remove the IF holder (#70).

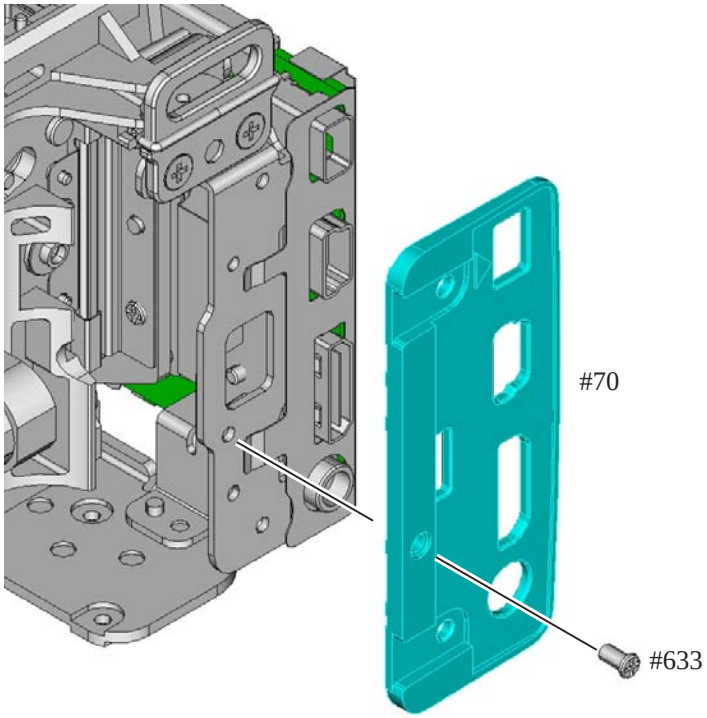

User ID:INC

TOGO PCB unit

- Peel off the tape [TA-0015 (13×18)].
- Remove the three FPCs and harness.
- Take out the four screws (#656) and one screw (#607).

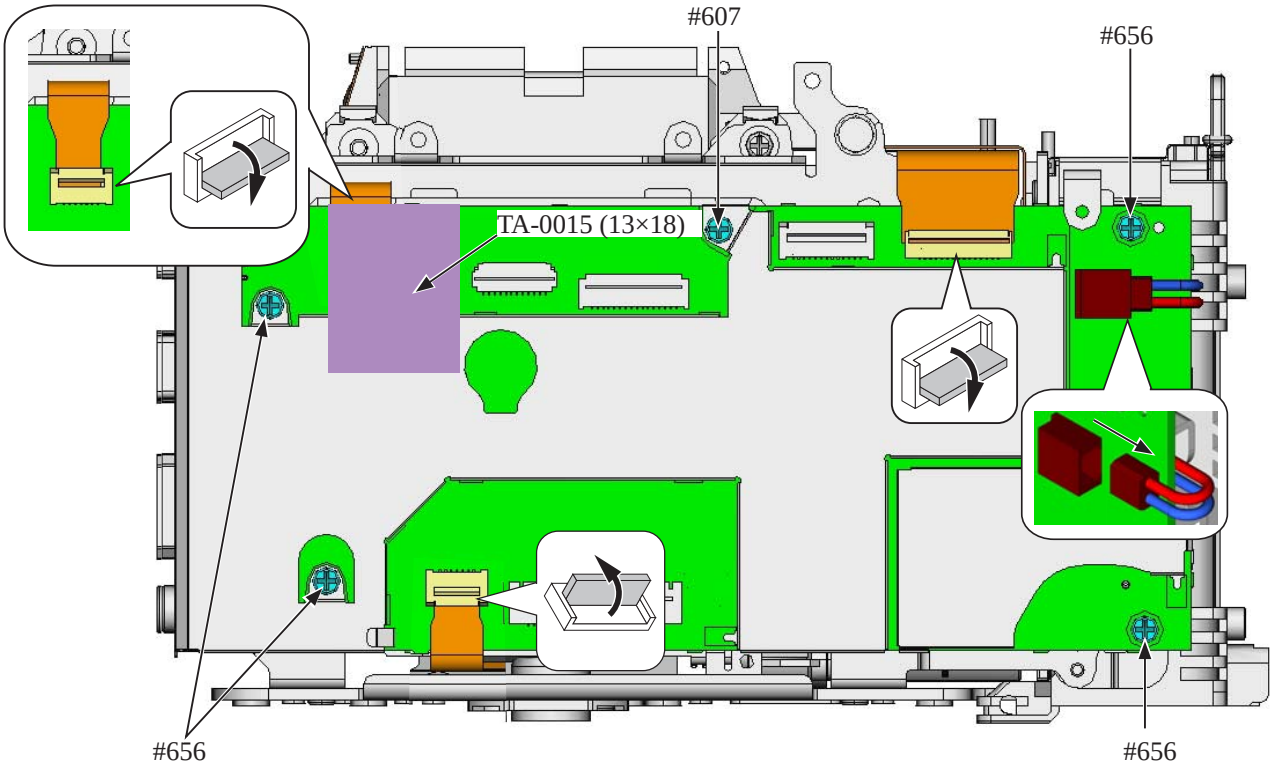

- Remove the TOGO PCB unit (#B2001).
- Disconnect the connection-FPC (#1015) from the connectors in the numeric order from ① to ② .

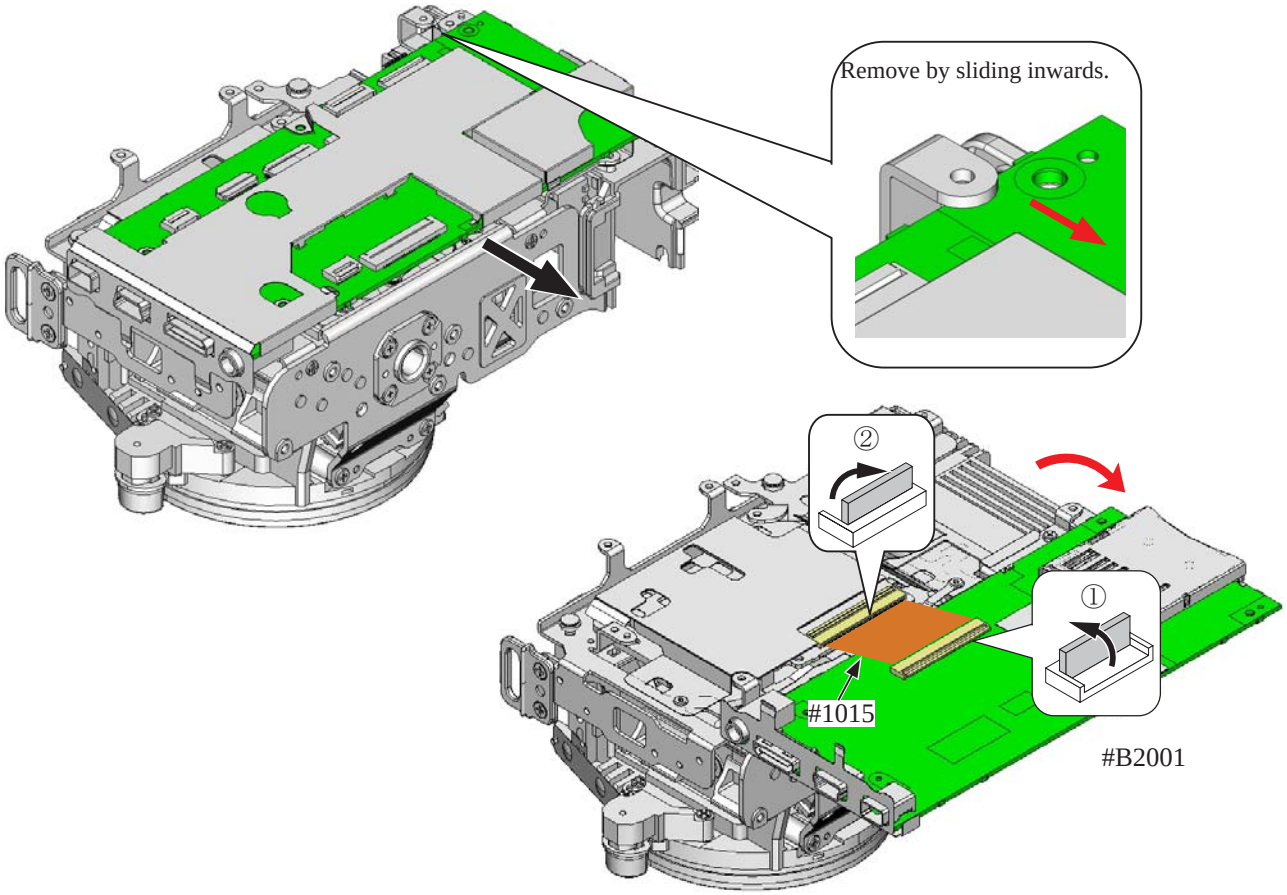

User ID:INC

Battery box unit

- Remove the spring (#158).

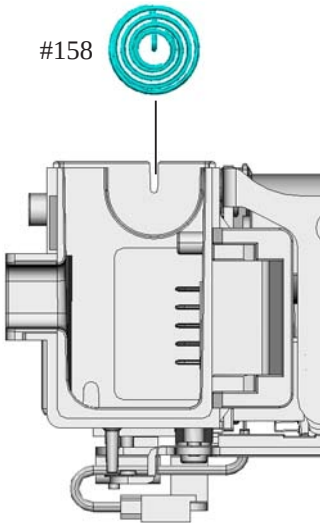

- Take out the one screw (#638) and two screws (#643).

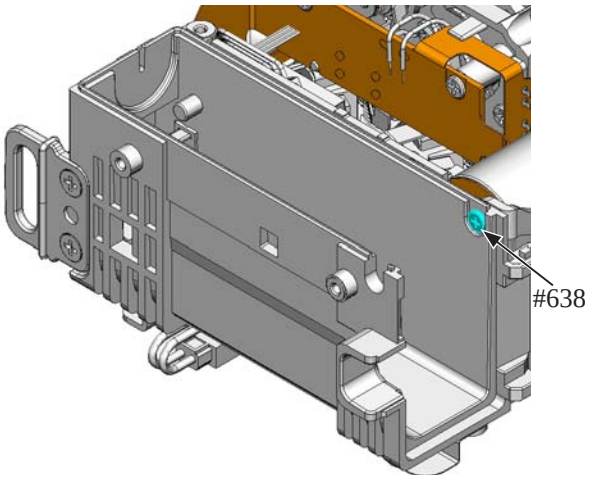

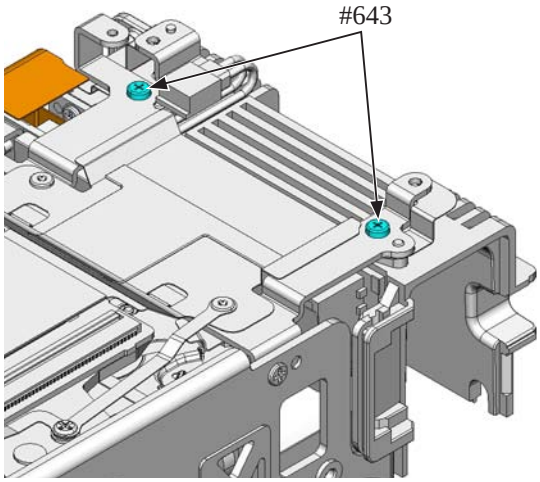

- Disconnect the FPC by slightly tilting the battery box sideways.
- Unsolder the four wires of the power drive PCB.
- Remove the harness.

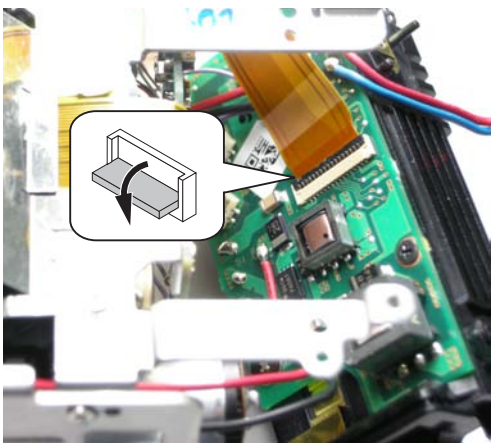

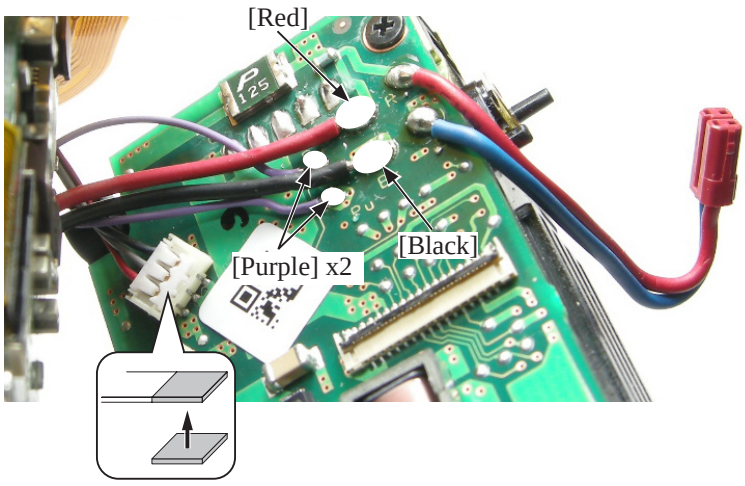

User ID:INC

- Unsolder the two wires of the harness (#1026).

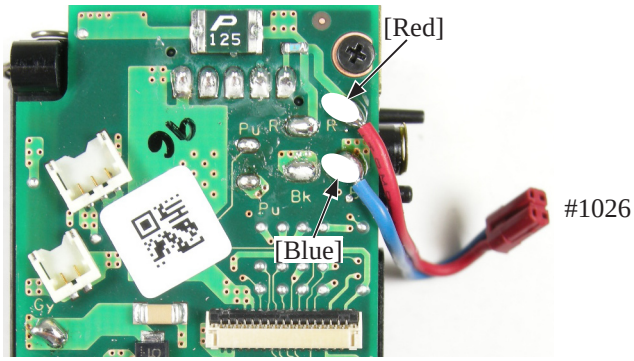

- Unsolder the two wires of the condenser.
- The battery box unit will come off.

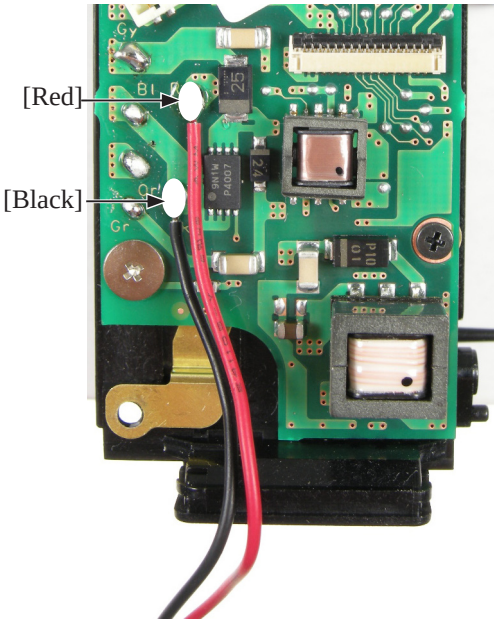

- Take out the two screws (#658) and one screw (#664).
- Remove the power drive PCB (#1004).

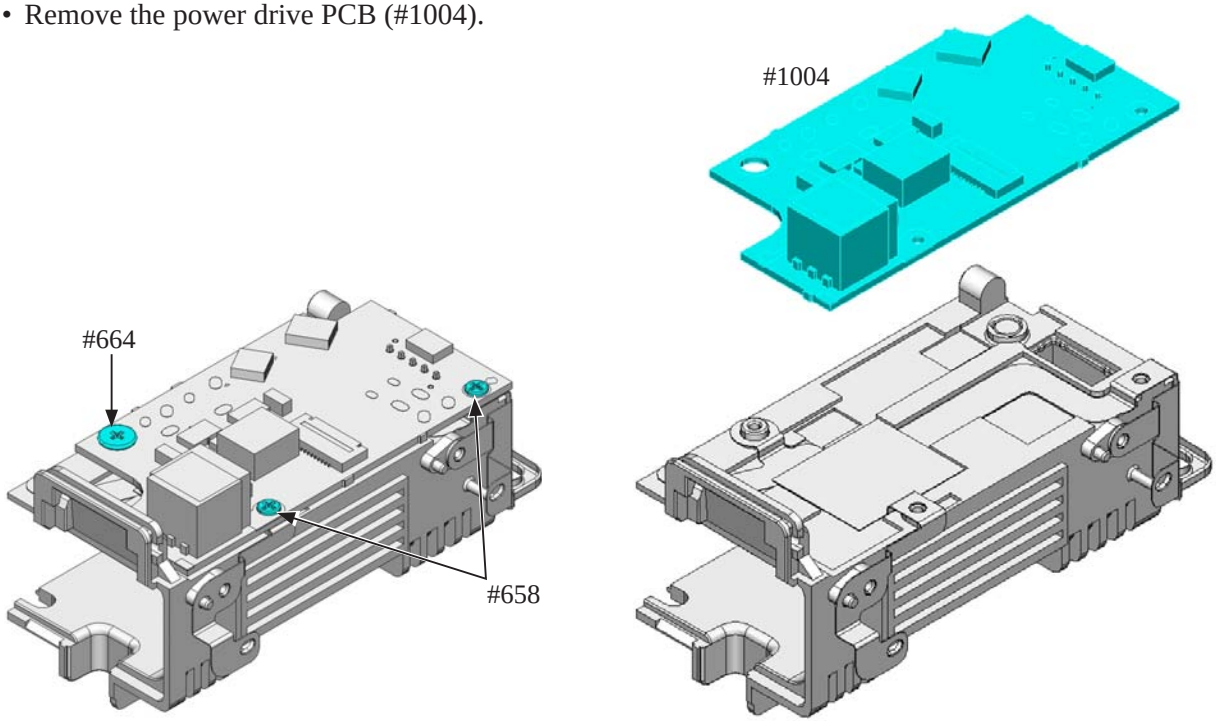

User ID:INC

- Remove the "O"-ring (#147).
- Take out the two screws (#651), and remove the eyelet (#145).

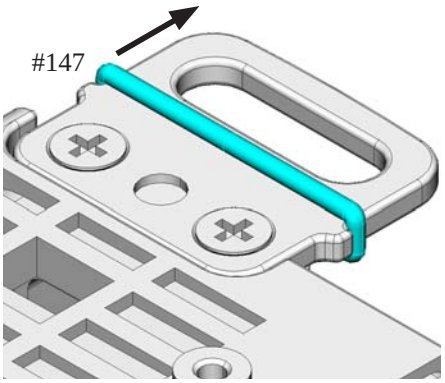

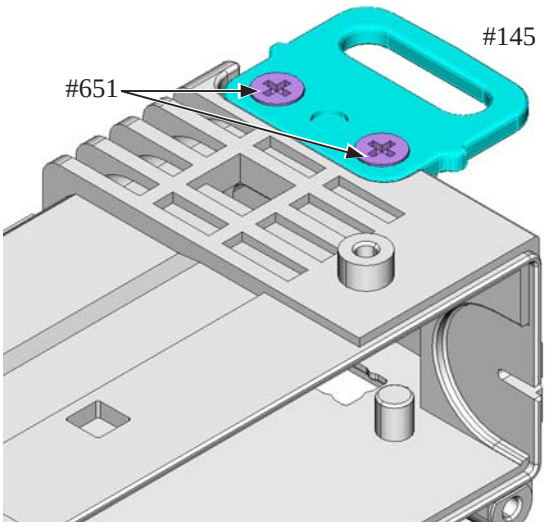

- Peel off the sheet (#150).

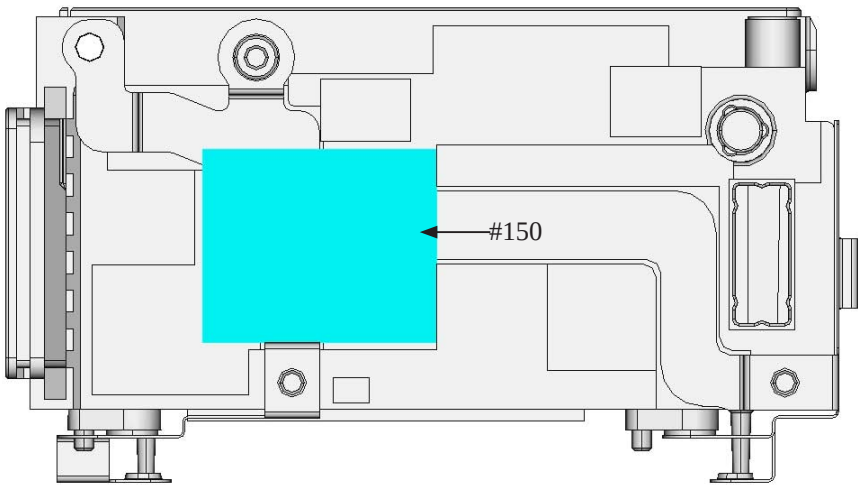

User ID:INC

• Remove the GND plate (#159).

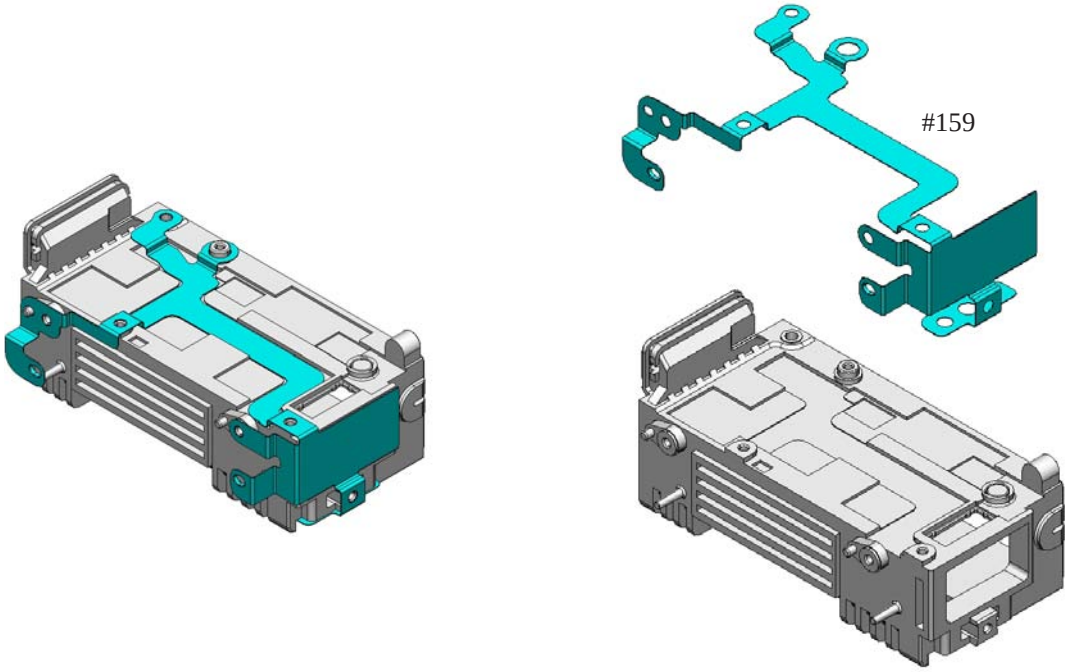

• Peel off the sheet (#154).

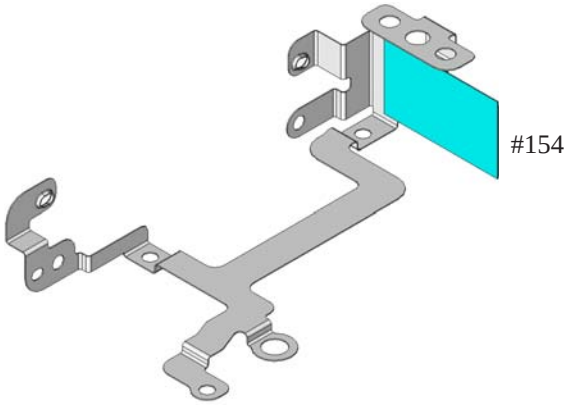

• Remove the adhesive (EDC0021), and remove the pin (#155) from the battery box (#156).

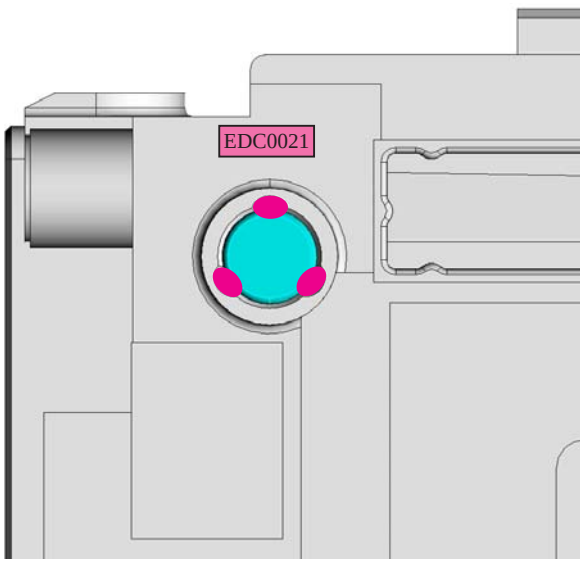

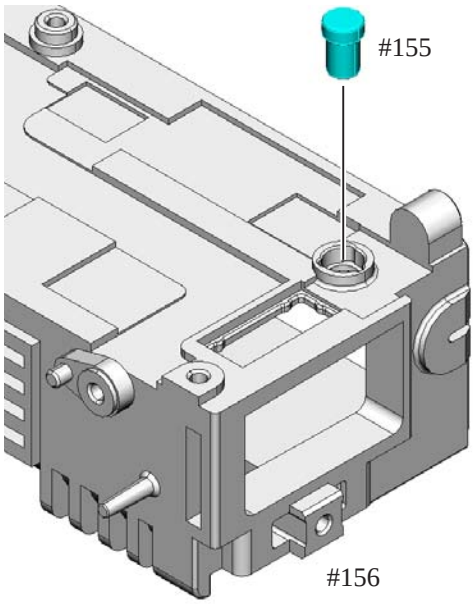

User ID:INC

Shield plate unit

- Take out the three screws (#607).

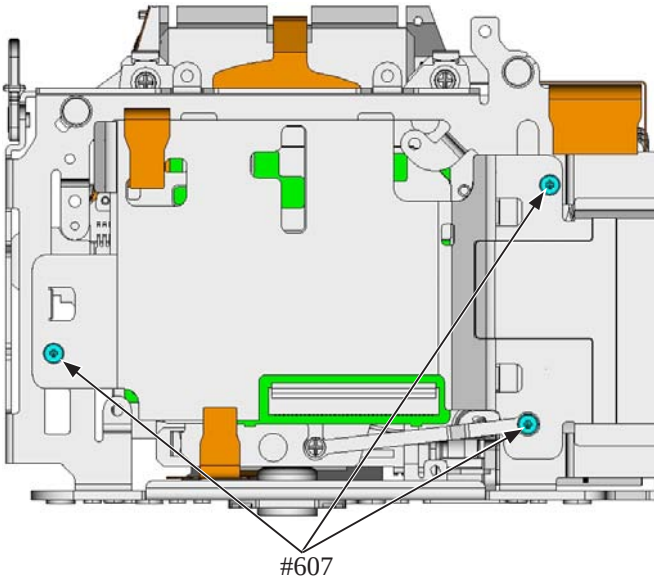

- Displace slightly the GND plate of the image sensor unit, and remove the shield plate unit.

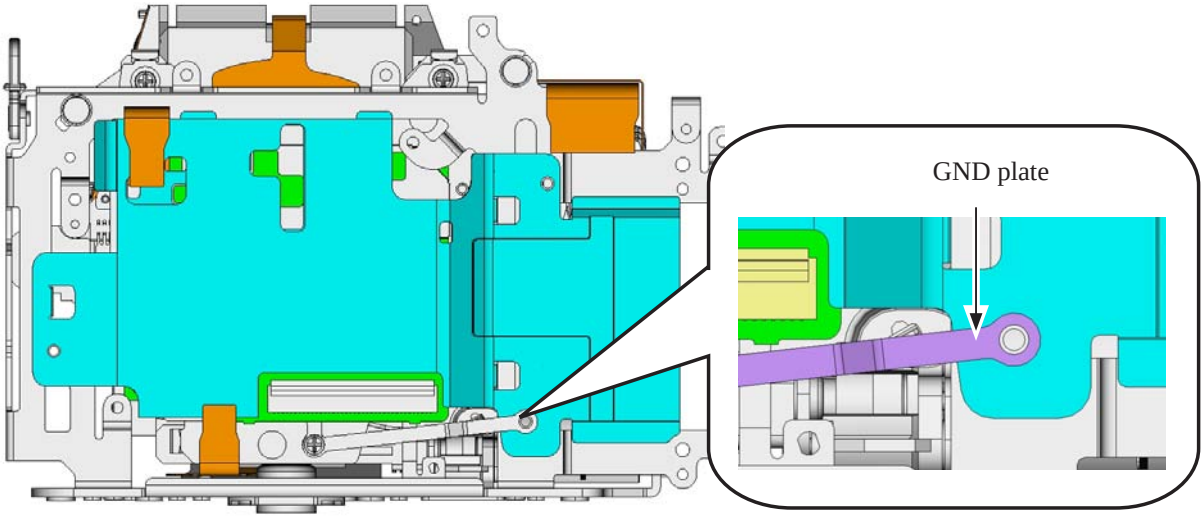

- Peel off the tape (#481) from the shield plate (#480).

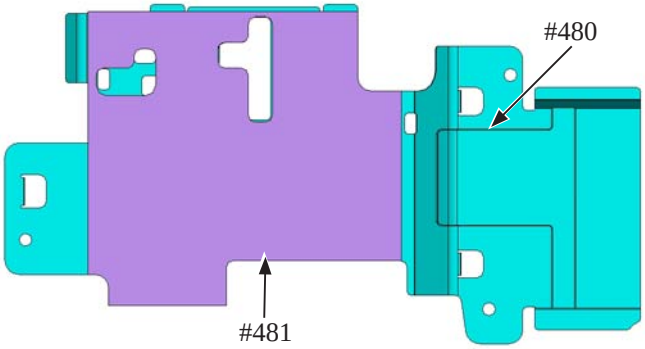

User ID:INC

- Disconnect the FPC.
- Take out the two screws (#635) and two screws (#656).
- Remove the sub-frame unit. (When this is removed, be careful not to get caught by a wire of the condenser.)
- Disconnect the connection-FPC (#1020).

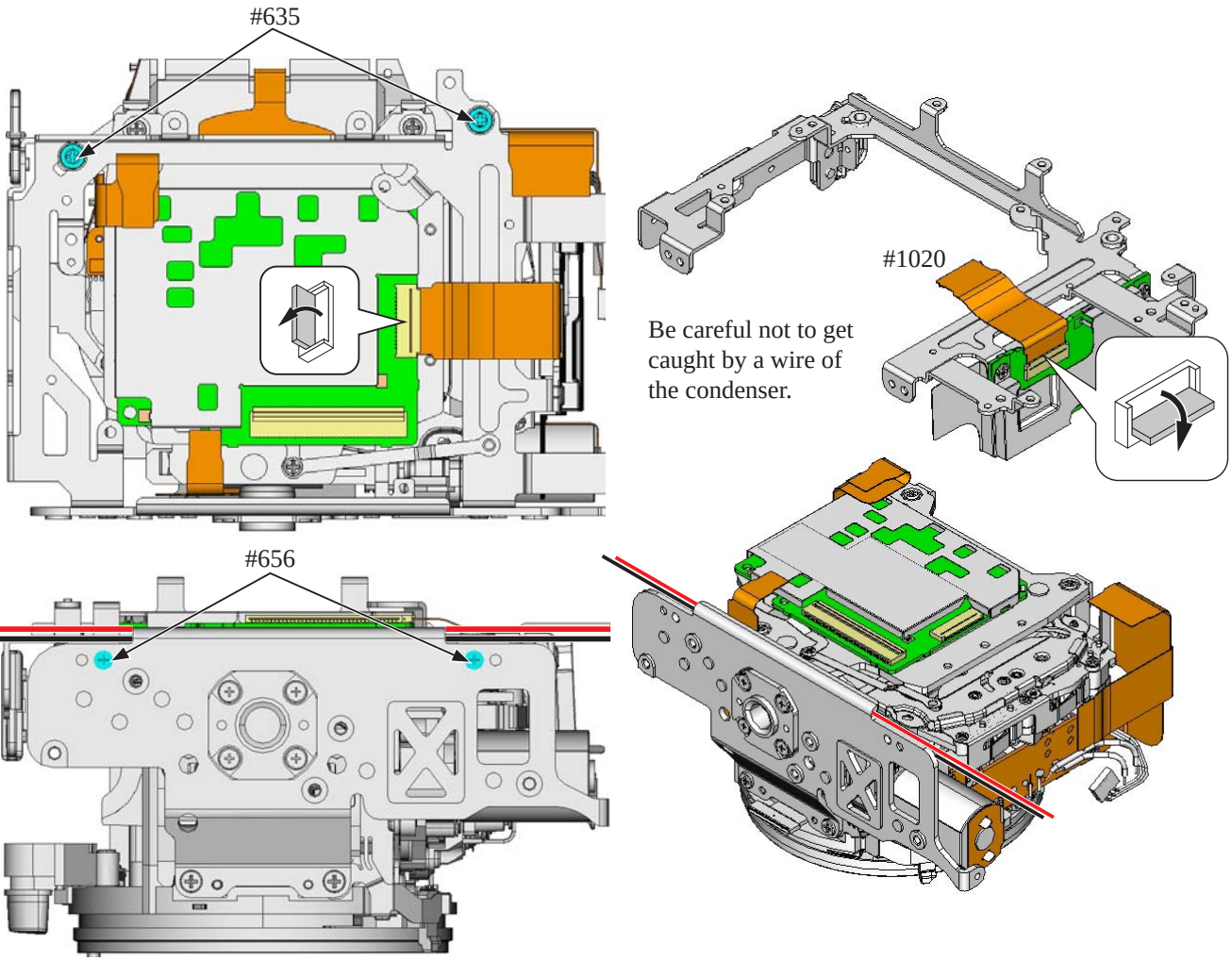

SZ-DC/DC PCB unit

- Take out the two screws (#656).
- Remove the SZ-DC/DC PCB unit (#B1002).
- Remove the four wires.

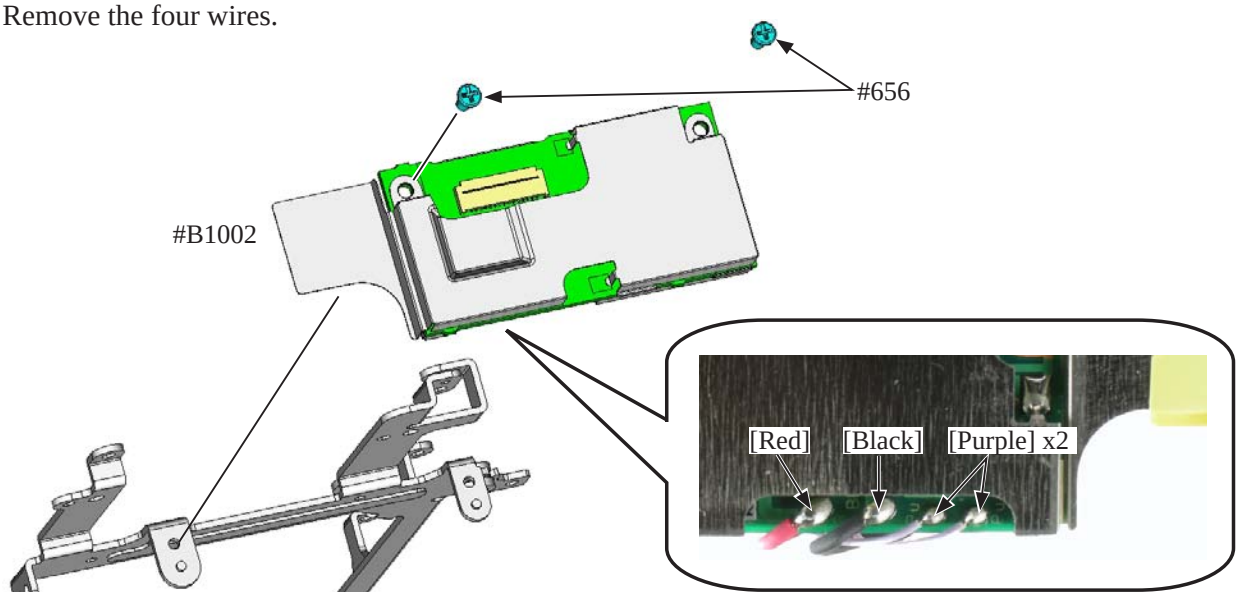

User ID:INC

Sub-frame

- Remove the "O"-ring (#147).
- Take out the two screws (#657), and remove the eyelet (#145).

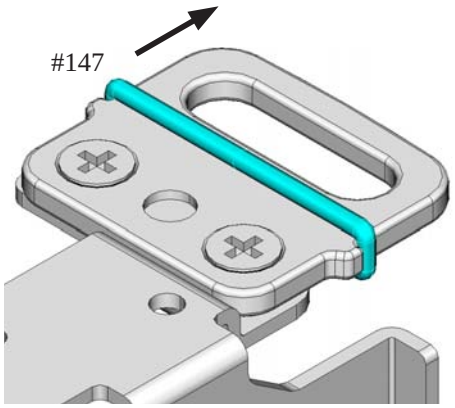

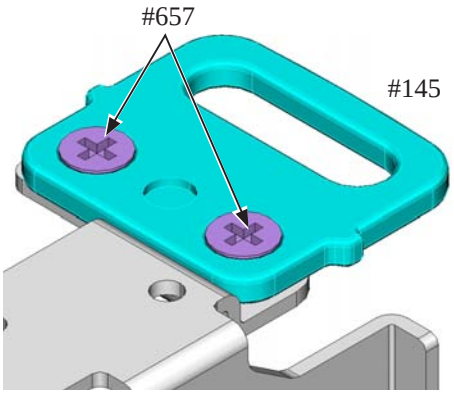

- Remove the two rubbers (#63) from the sub-frame (#62).
- Peel off the tape [TA-0016 (5×8)].

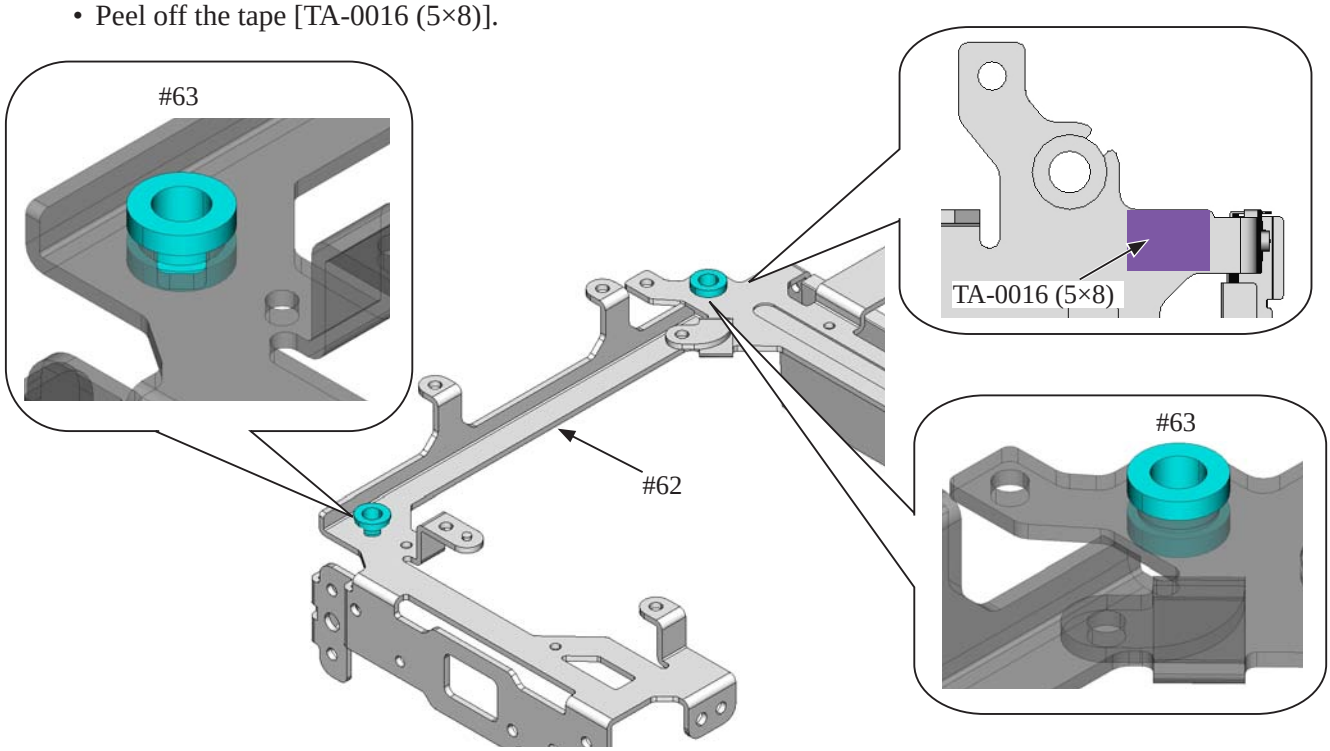

User ID:INC

Bottom plate unit

- Peel off the shield sheet (#65) from the front body unit.

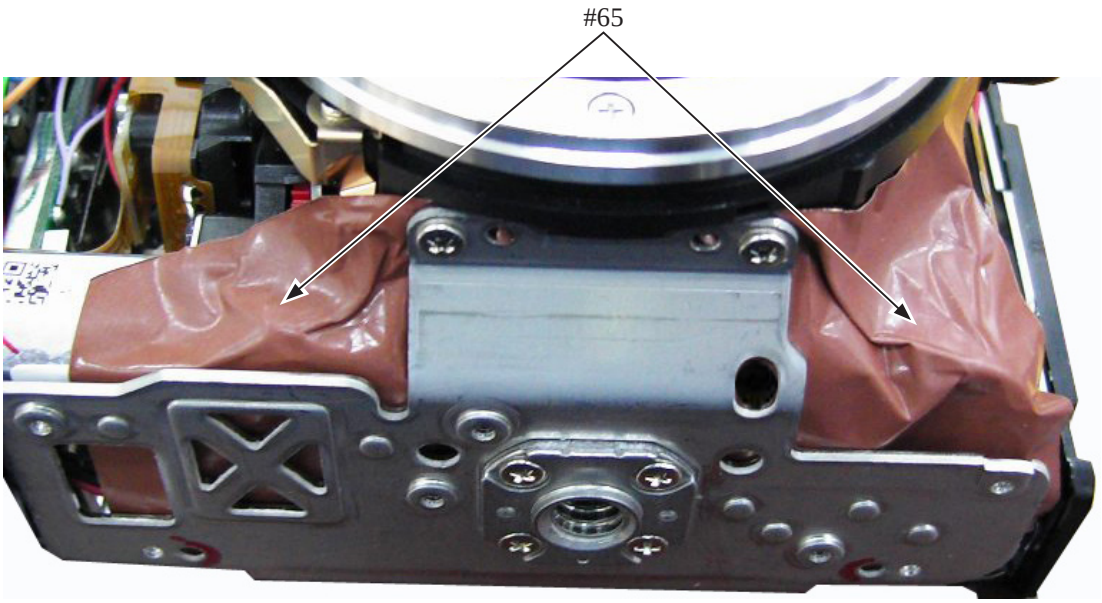

- Peel off the heat-radiating sheet of the image sensor unit (#B3051) from the bottom plate unit.
- Take out the two screws (#647), and remove the bottom plate unit.

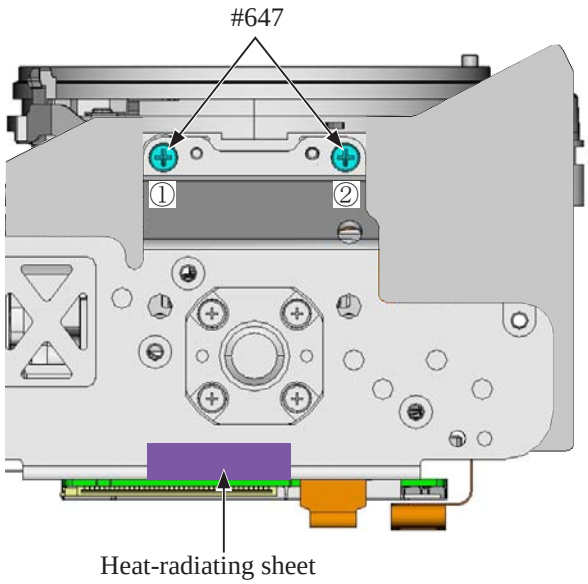

User ID:INC

- Remove the two wires of the condenser.
- Peel off the tape [TA-0026 (5×40)].

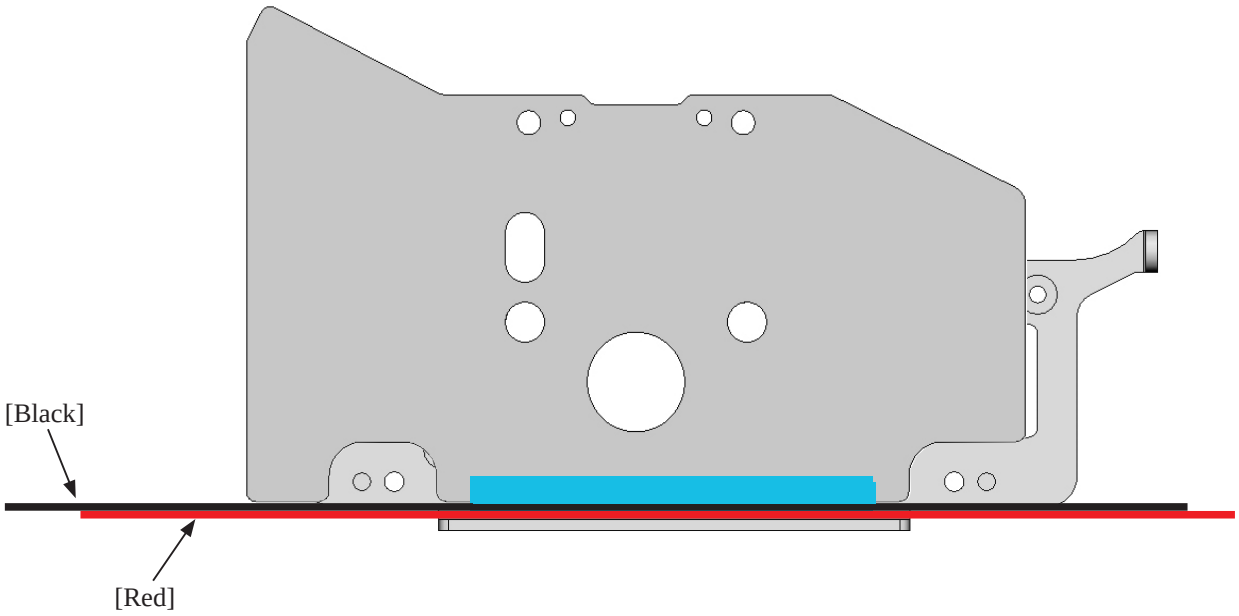

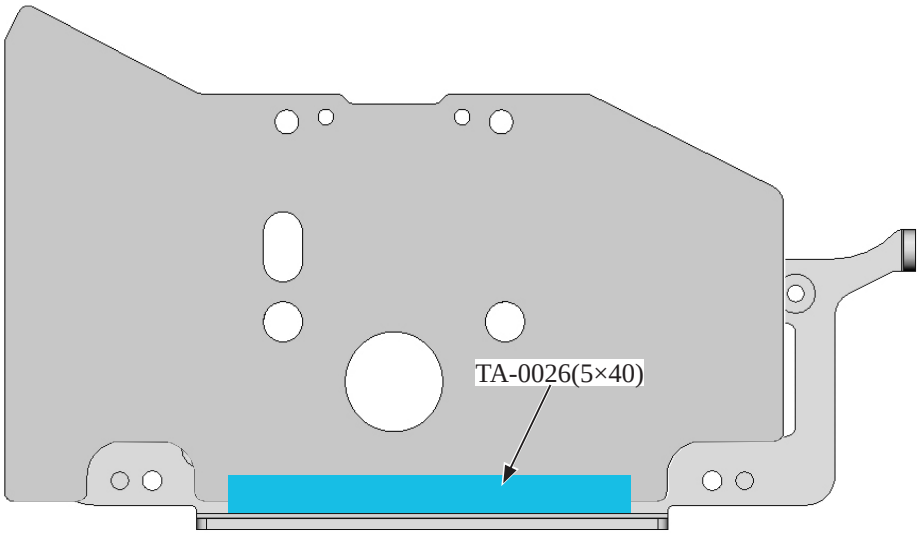

User ID:INC

• Attach the shield sheet (#65) to the bottom plate unit.

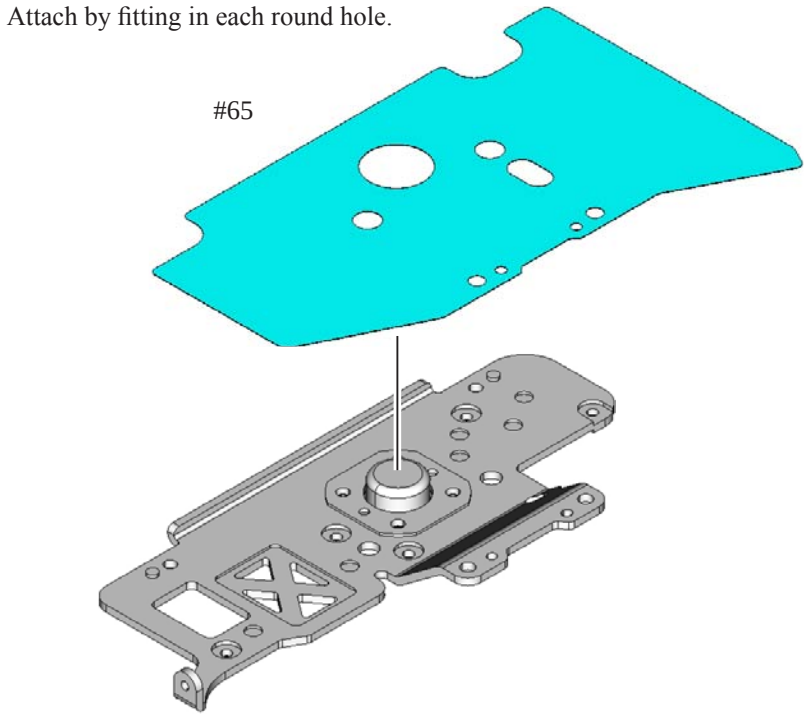

• Take out the four screws (#630), and remove the tripod base (#68) from the bottom plate (#61).

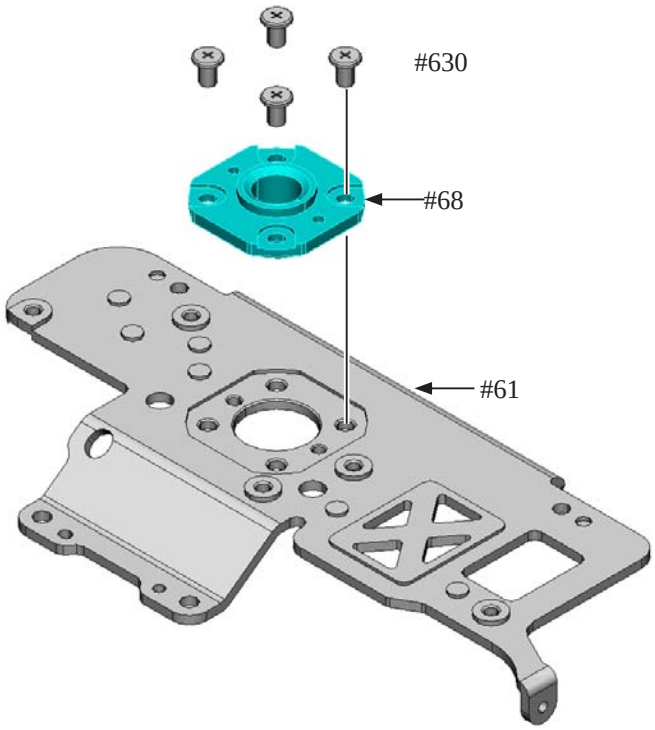

User ID:INC

5. Front Body

Image sensor unit

- Peel off the tape (#59).
- Take out the three screws (#634), and remove the three washers (#80).
- Remove the image sensor unit (#B3051).
- Remove the washers (#87-#107).

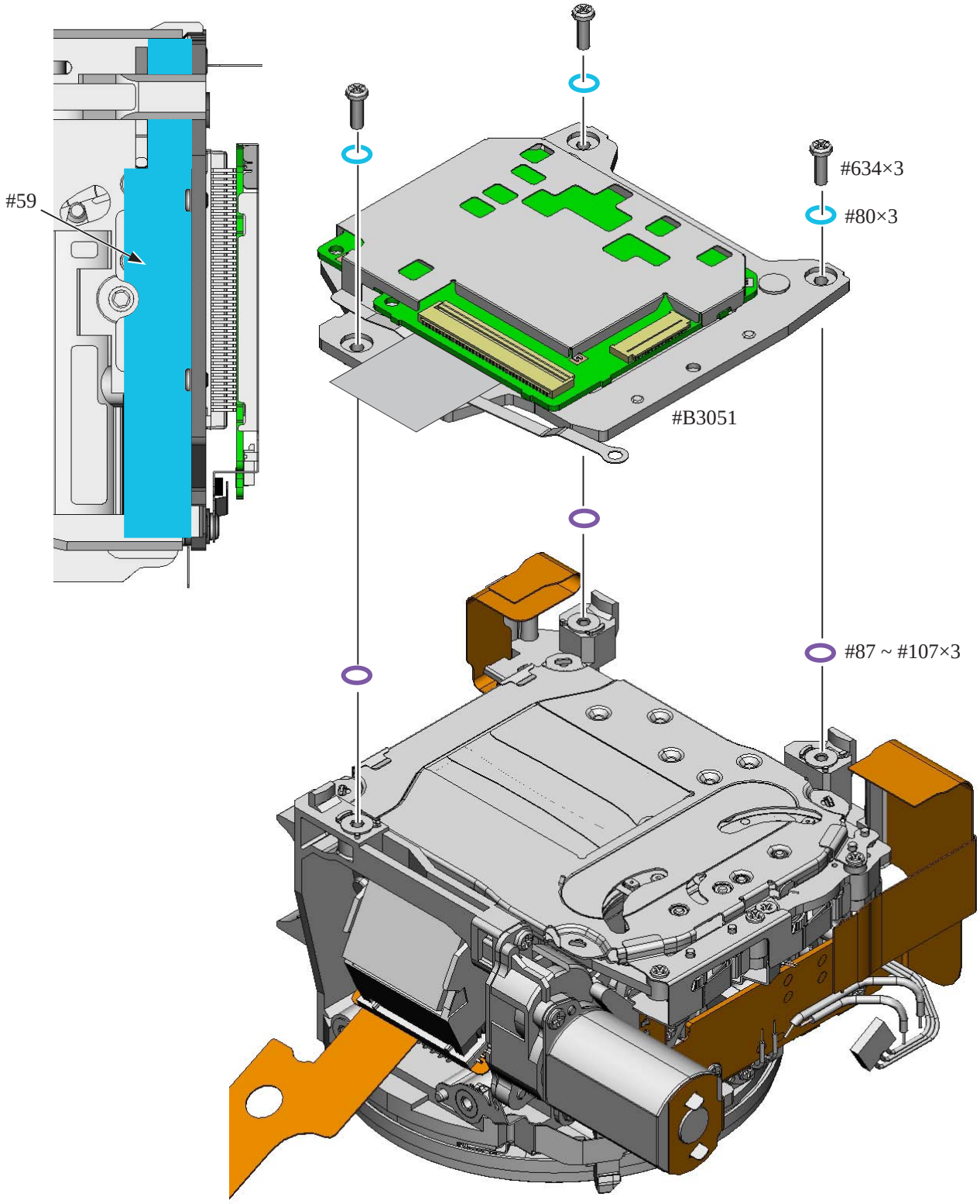

User ID:INC

- Peel off the tape [TA-0016 (5×8)] from the lens contact unit (#B2113).
- Unsolder the three wires of the harness (#1028).

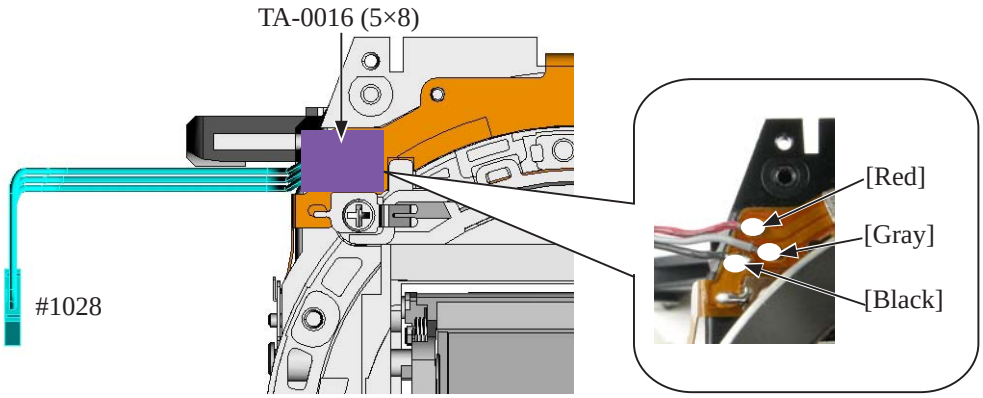

Shutter PCB

- Turn the gear (indicated in red) of the SQ PCB unit in the direction of the arrow to raise the mirror. Then, set the lever's position of the MG PCB unit to the "OK" position as below.
  Caution: It may require turning the gear several times to become at "OK" position.

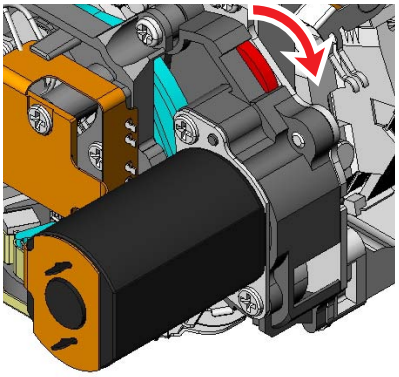

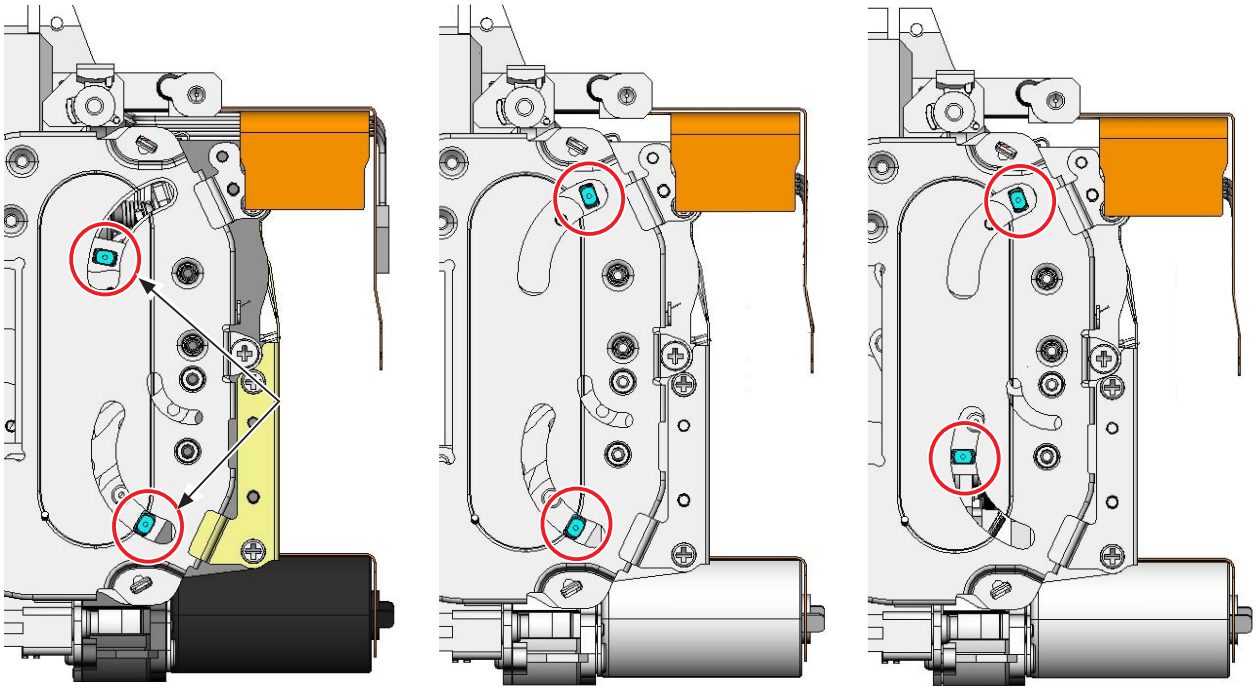

OK NG: Not Good NG: Not Good

User ID:INC

- Take out the screw (#612).
- Remove the retainer plate (#2004).

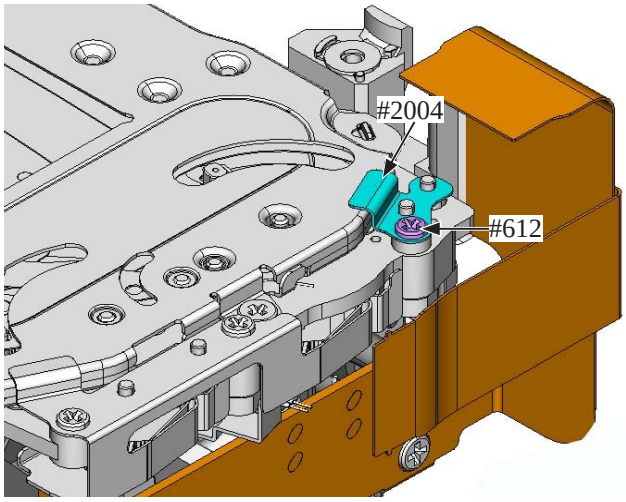

- Take out the two screws (#612).
- Remove the brake plate (#196).

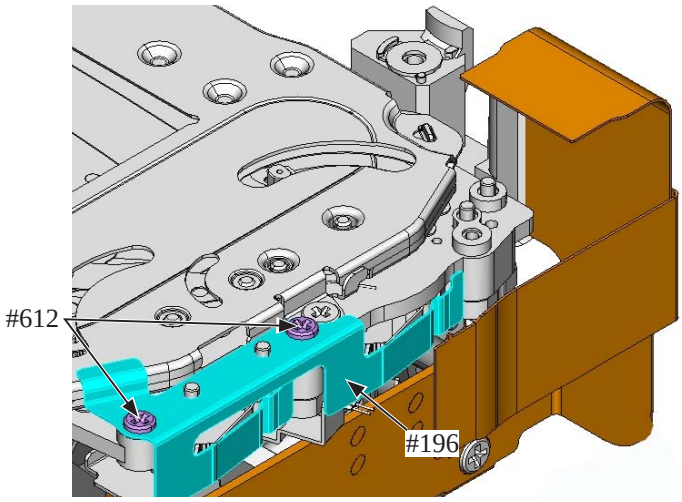

- Take out the screw (#604).
- Remove the retainer plate (#2003).

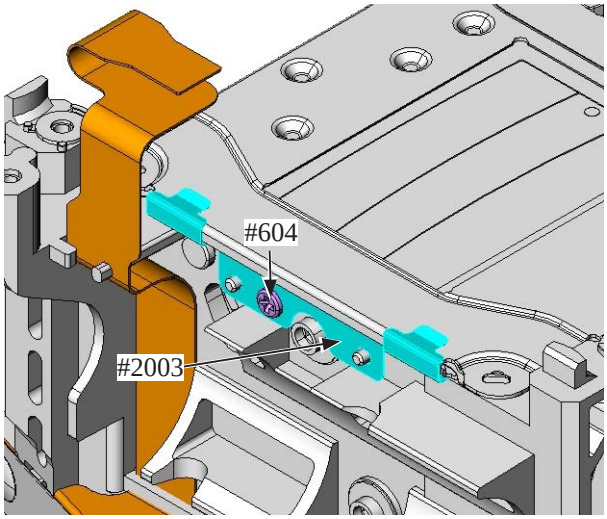

User ID:INC

- Take out the screw (#608).
- Remove the holder plate (#2002).

  Caution: Be careful that the spring may pop out. To avoid deformation of [#2002], do NOT hold the other areas than indicated in red.
- Unhook the springs (#178 and #179).

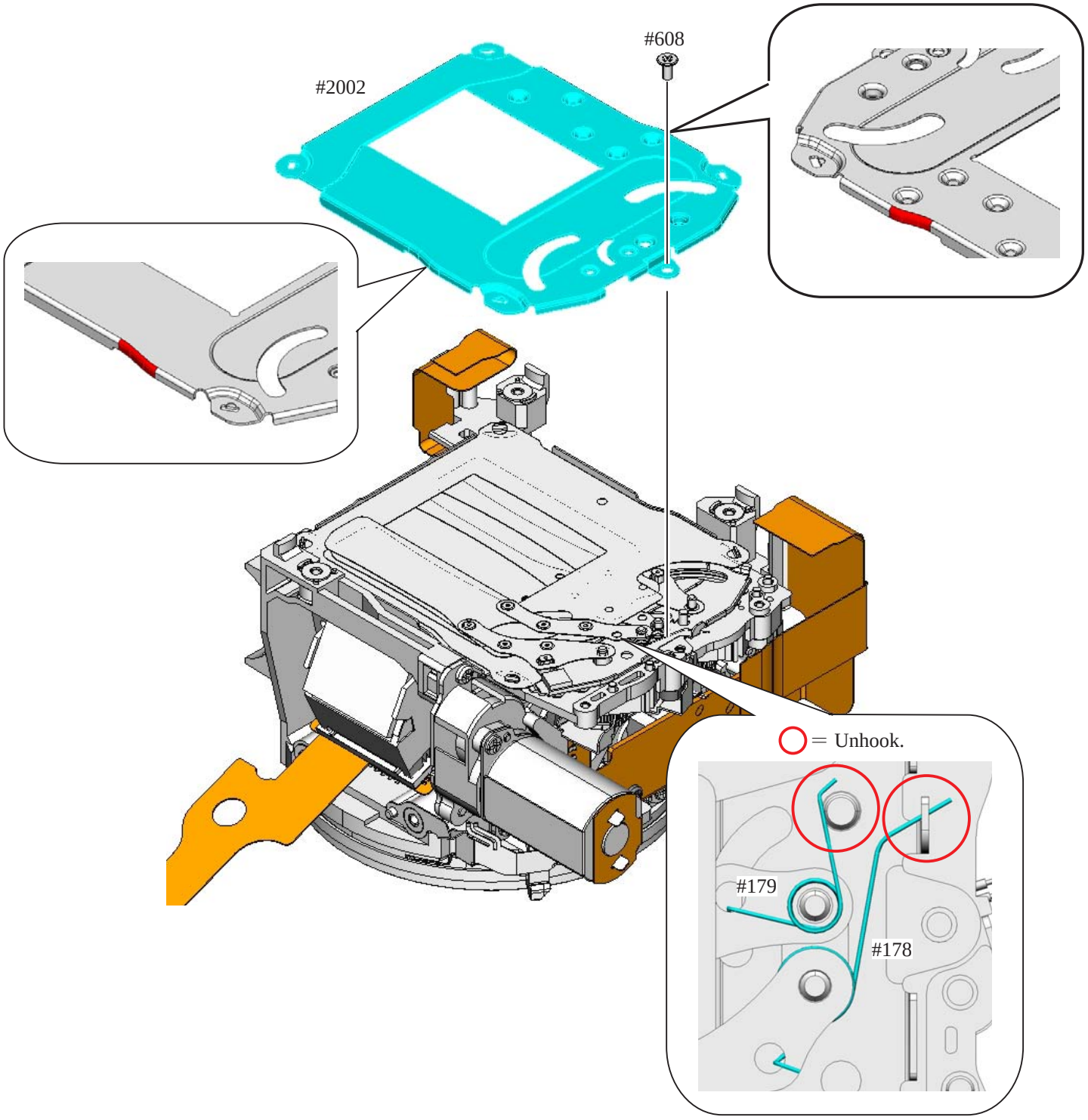

User ID:INC

• Remove the shutter curtain unit (#B2016), and also remove the spring (#178).

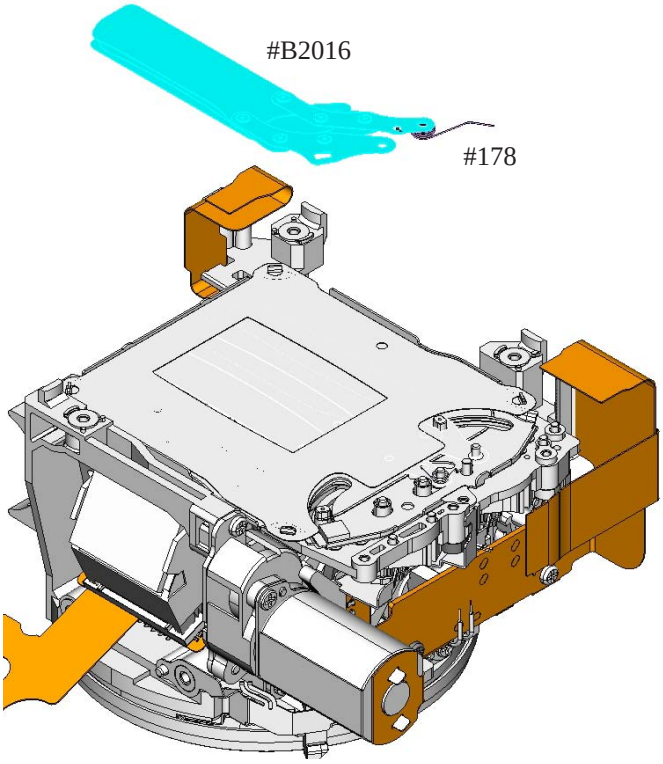

• Remove the retainer plate (#2015).

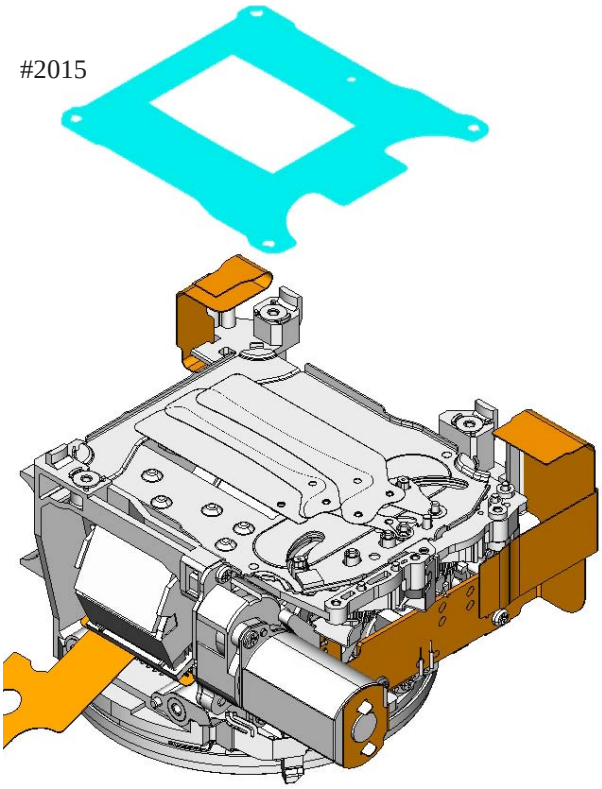

User ID:INC

- Remove the shutter curtain unit (#B2016), and also remove the spring (#179).

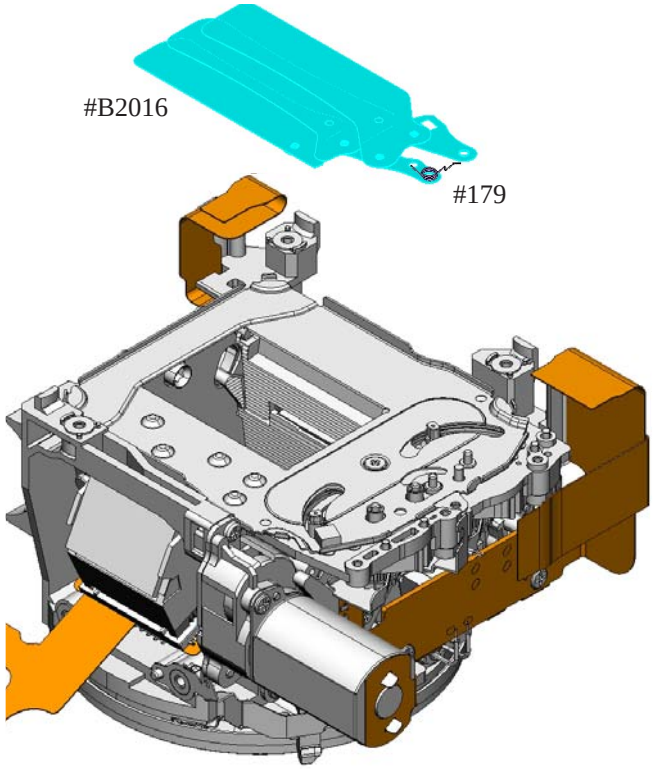

- Take out the screw (#619).
- Remove the shutter PCB unit (#2001RP).

Caution: To avoid deformation of [#2001RP], do NOT hold the other areas than indicated in red.

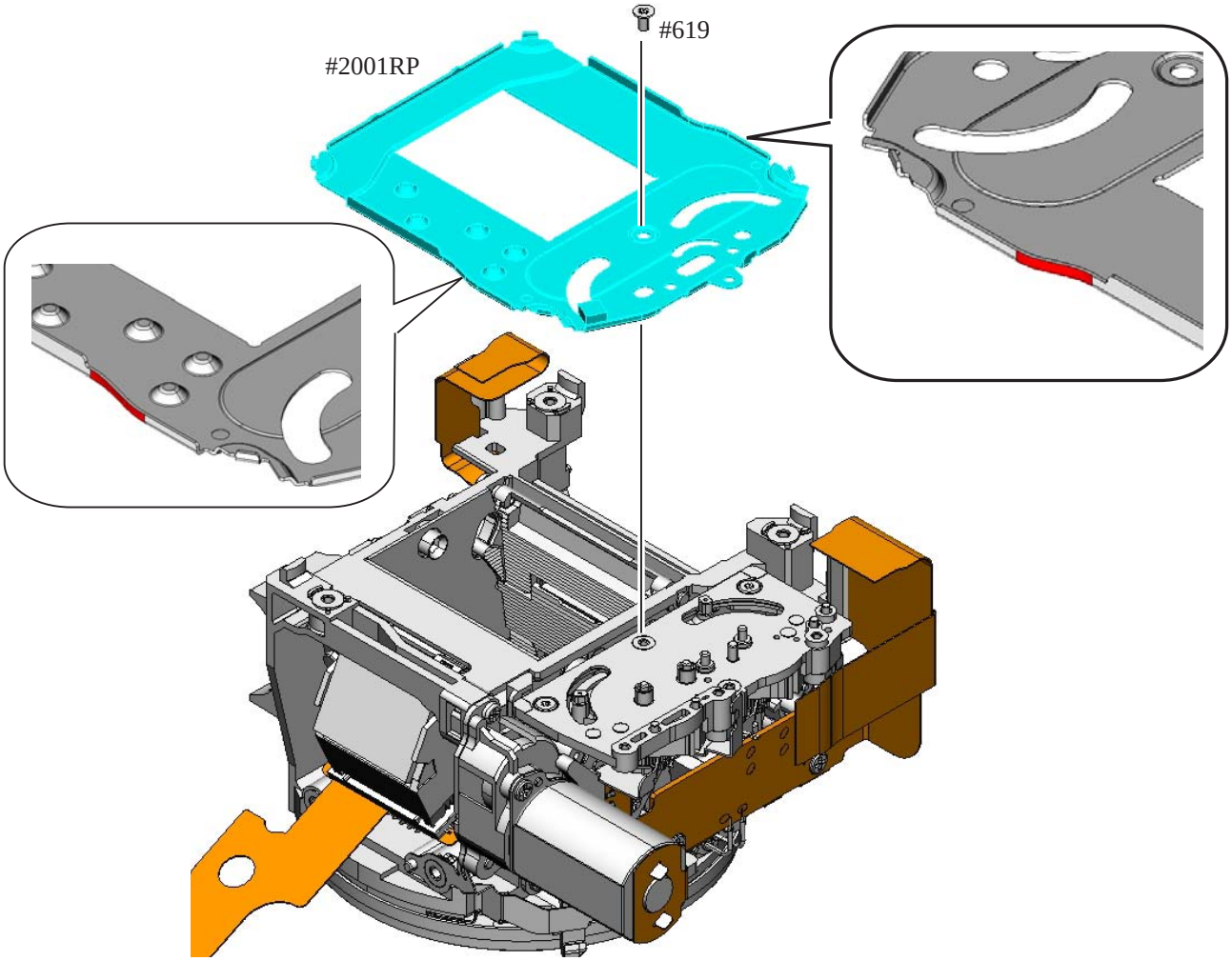

User ID:INC

MG PCB unit

- Unsolder the four wires.
- Take out the two screws (#607).
- Remove the MG PCB unit (#B176).

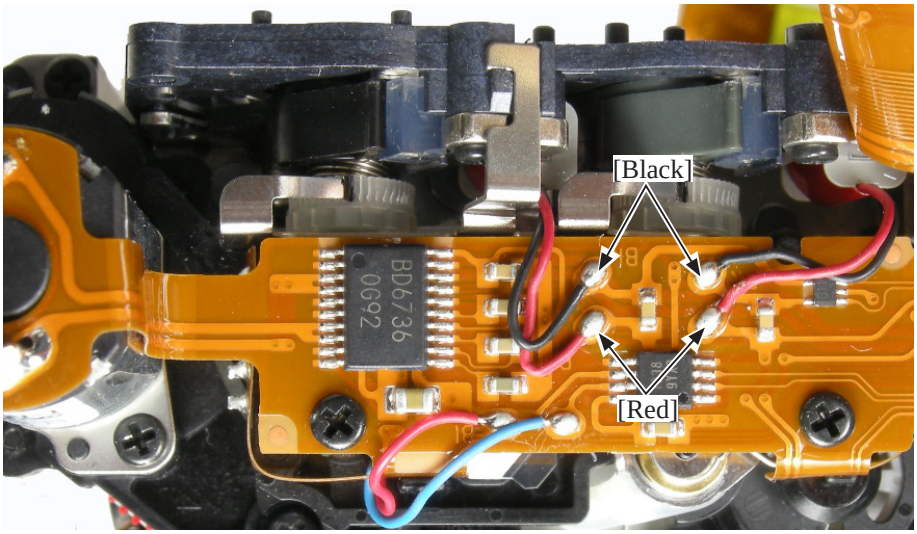

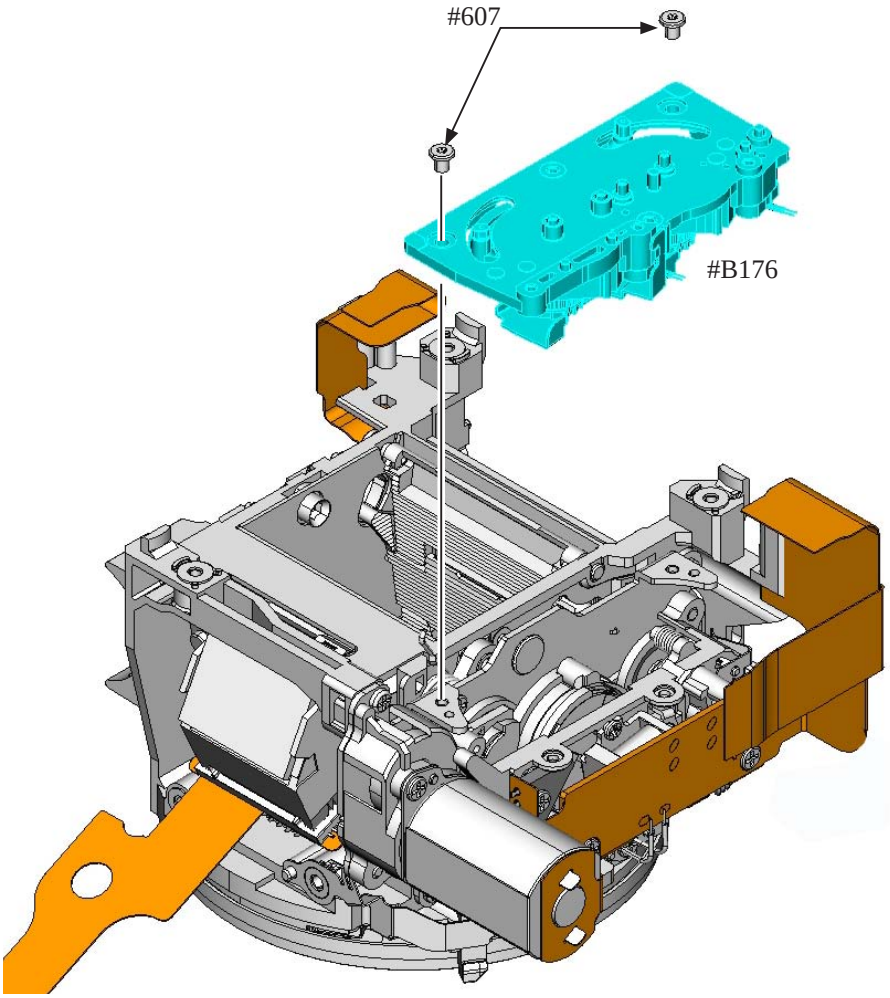

User ID:INC

SQ PCB unit

- Turn the gear indicated in red clockwise to lower the mirror.
- Loosen the four screws (#602). By slightly lifting the SQ PCB unit, remove the spring of the SQ unit from the hook of the mirror unit.
- Loosen the four screws (#602).

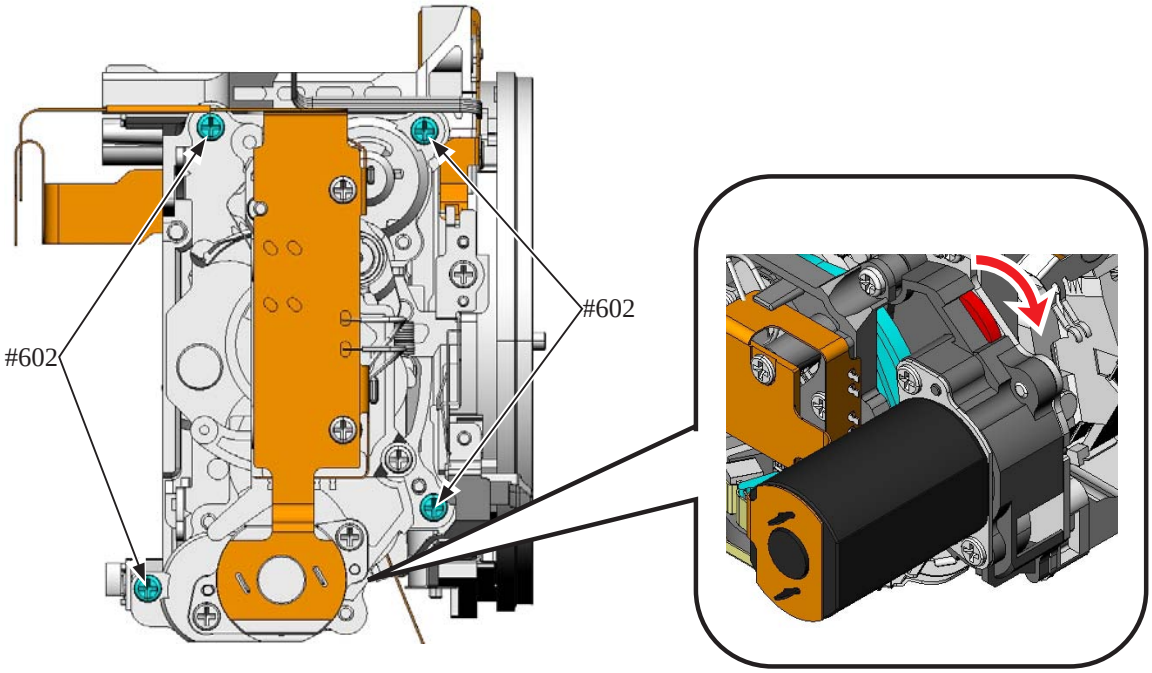

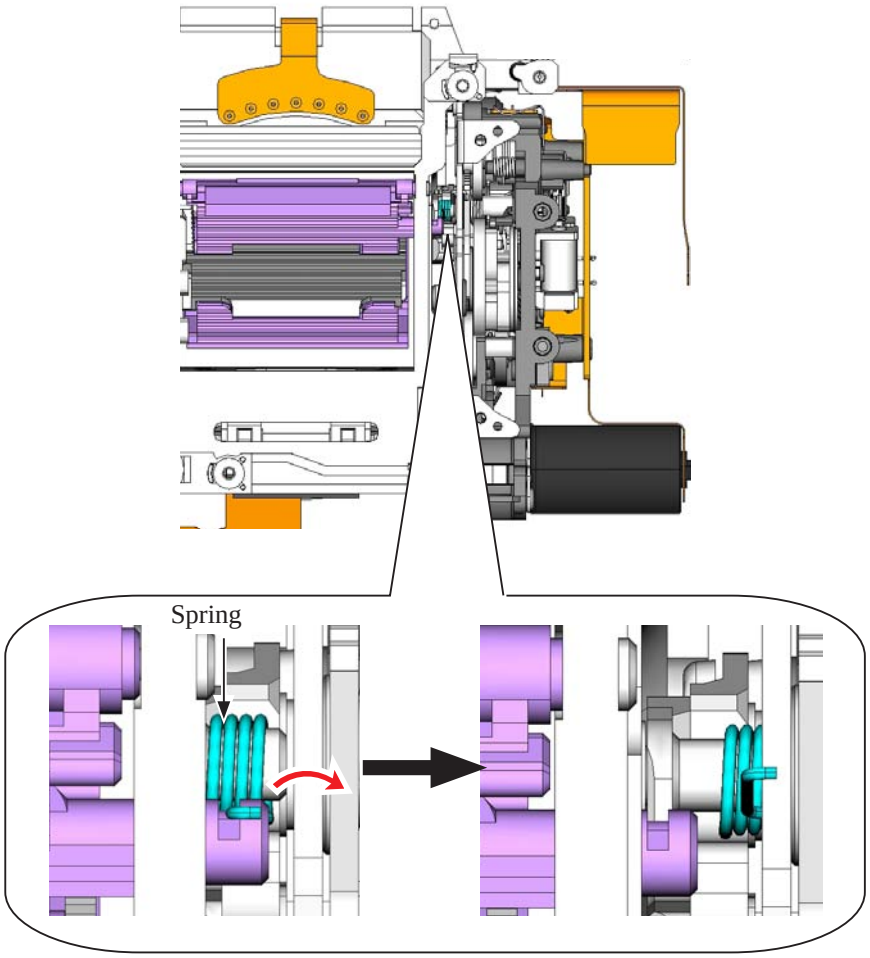

User ID:INC

- Remove the aperture lever section of the SQ PCB unit (#B2177) from the front body by releasing from a gap (see below).
- Peel off the shading sheet (#29).

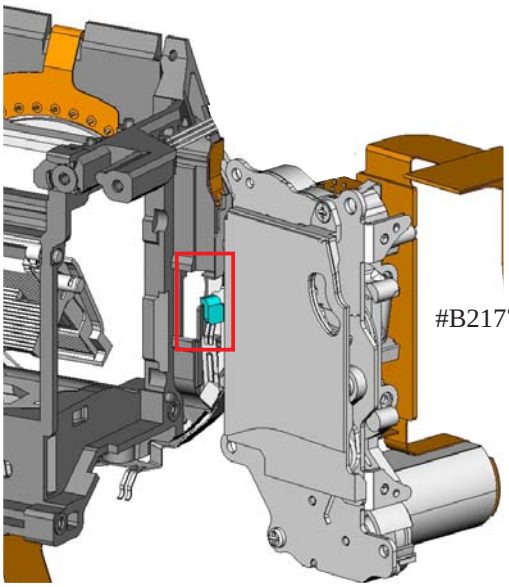

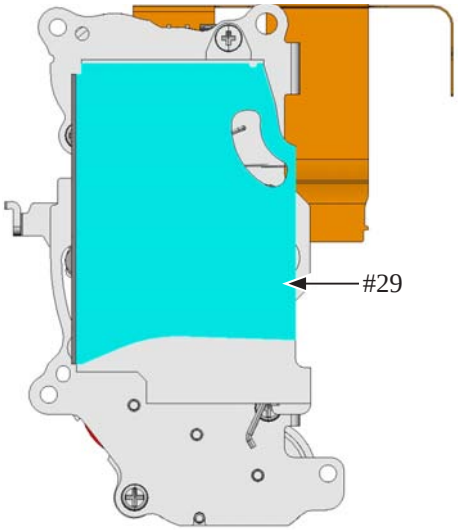

Bayonet mount

- Take out the five screws (#653) and one screw (#654).
- Remove the bayonet mount (#111).
- Remove the three bayonet mount springs (#112).

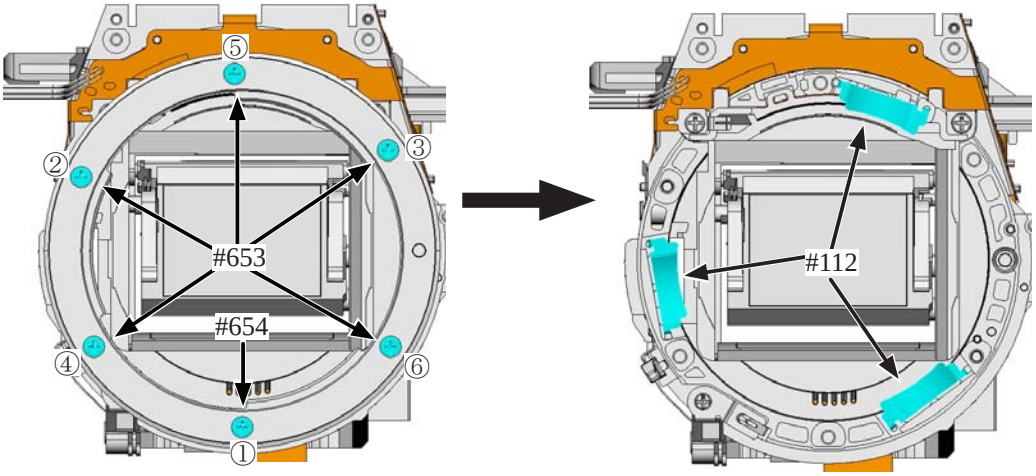

#111

User ID:INC

- Take out the screw (#655).
- Remove the GND plate (#137), and also remove the F-min coupling block (#131).

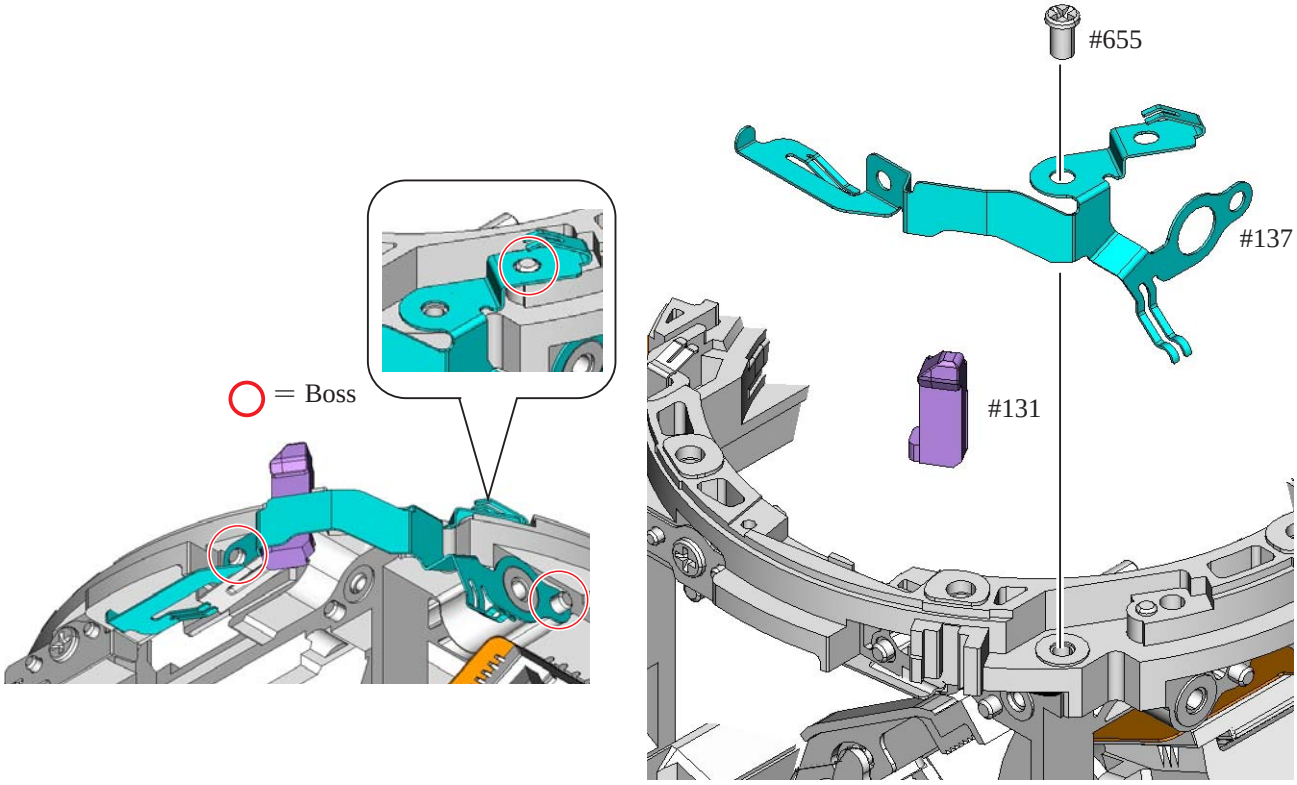

- Remove the gasket (#489).

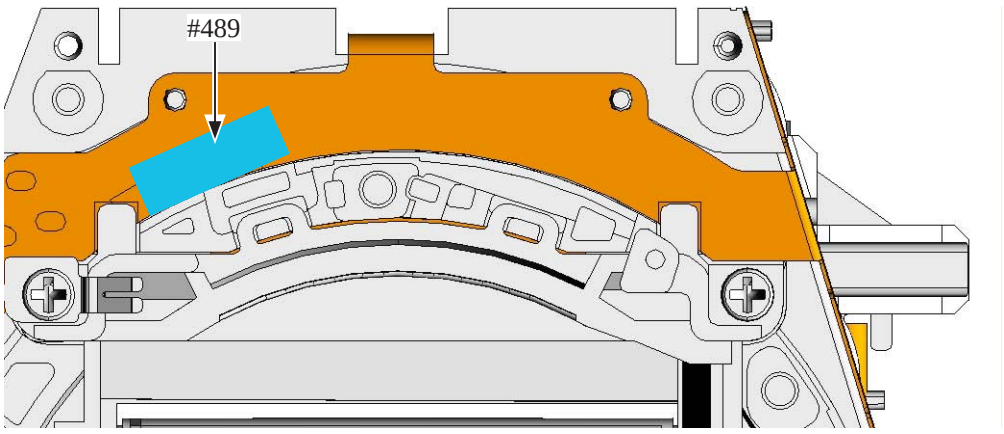

User ID:INC

F-min SW

- Peel off the tape [TA-0009 (5×7)].
- Remove the solder bridge that joints the F-min SW (#133) and the FPC of the lens contact unit (#B2113).
- Take out the screw (#668), and remove the F-min SW (#133).

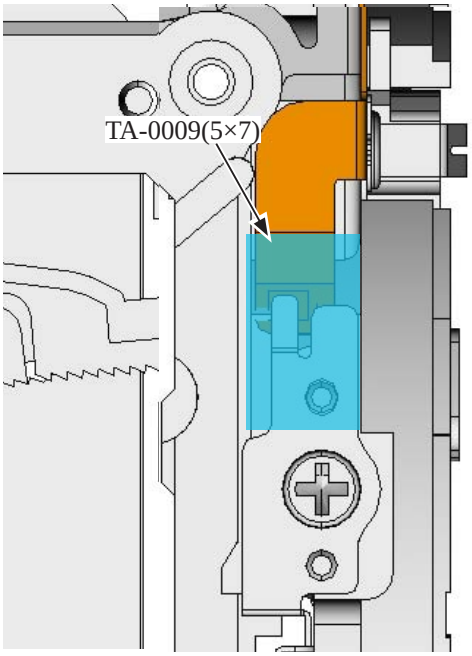

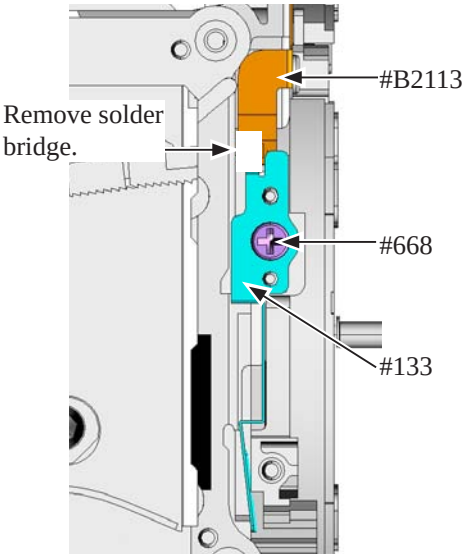

Lens contact unit

- Remove the solder bridge.
- Take out the two screws (#650), and remove the GND plate (#138).

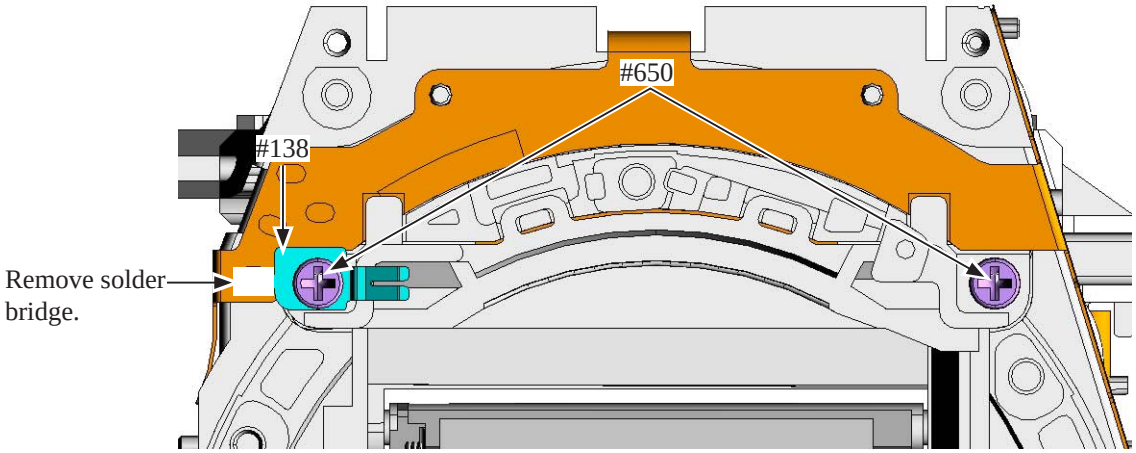

User ID:INC

- Take out the screw (#652).
- Remove the lens release SW (#121).
- Peel off the FPC of the lens contact unit (#B2113) by flicking it up.
- Remove the double-stick tape [TA-0026 (6×11)].

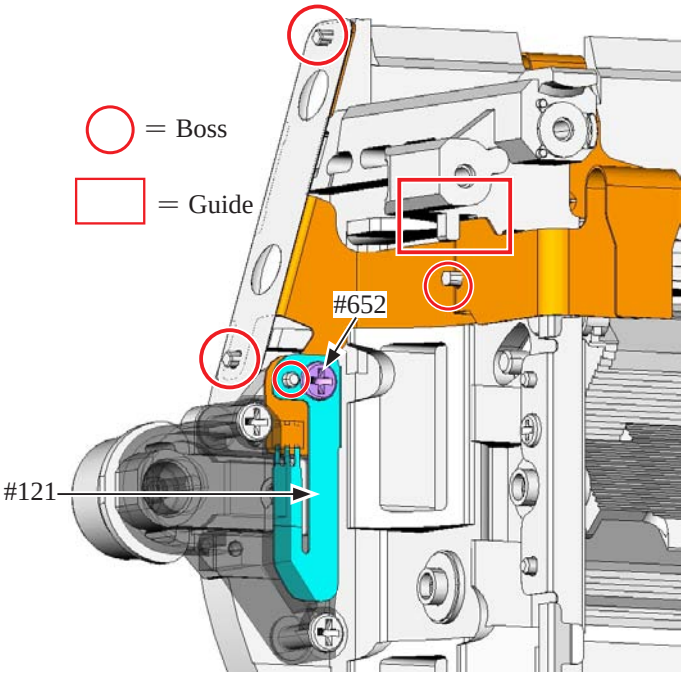

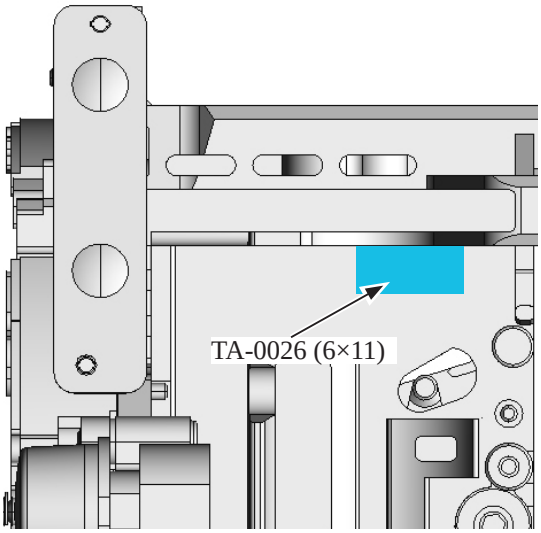

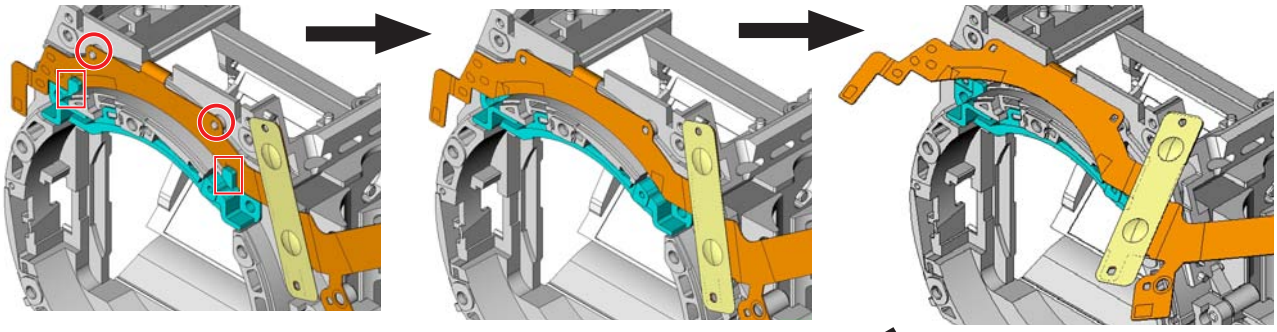

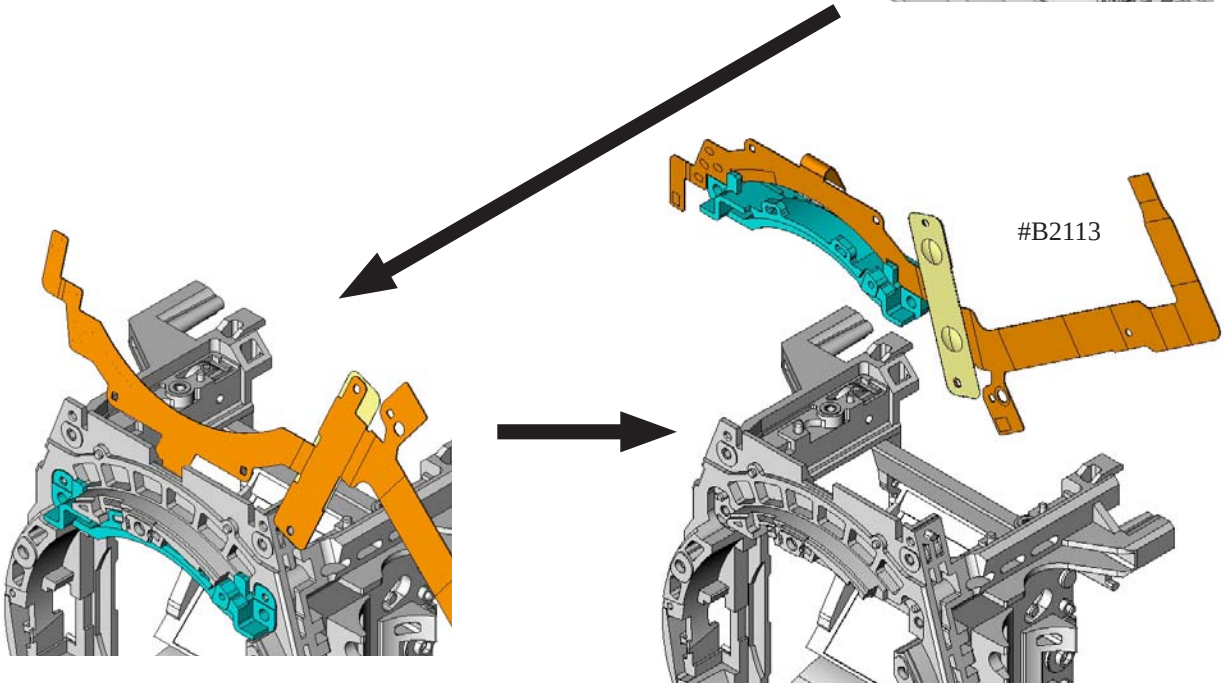

User ID:INC

AF sensor unit

- Take out the three screws (#162) with the hexagonal key（φ1.5mm).
- Remove the AF sensor unit (#B2163).
- Peel off the tape (#39) from the AF sensor unit (#B2163).
- Remove the three springs (#161).

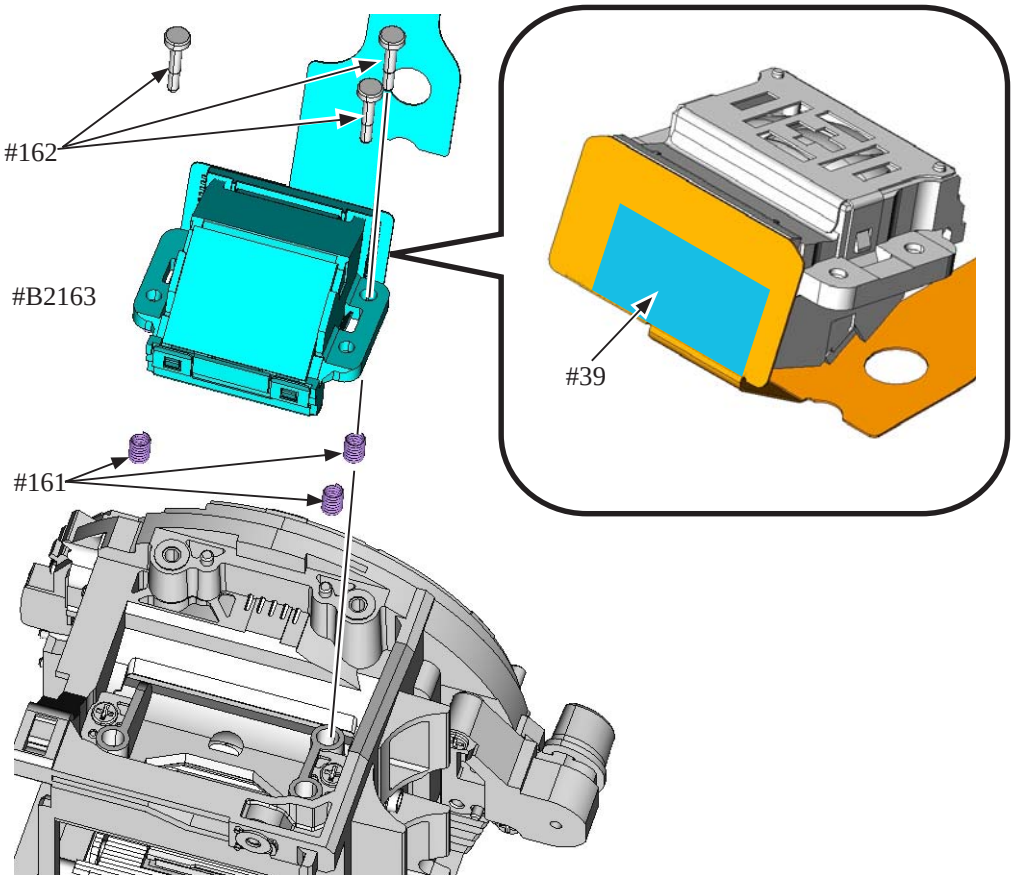

Lens release button unit

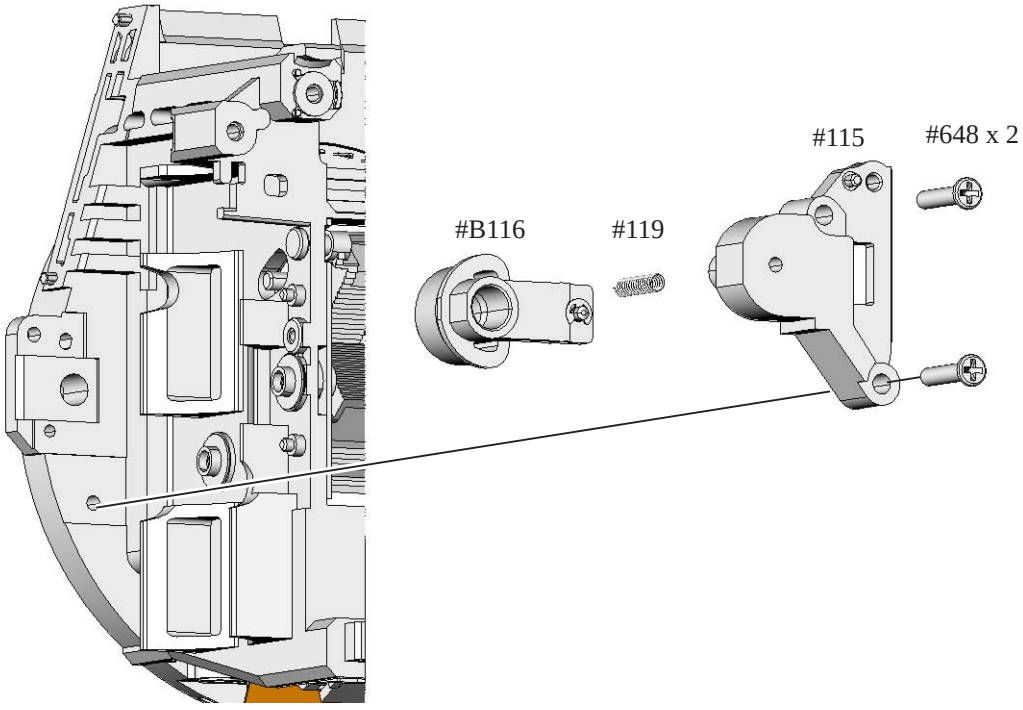

User ID:INC

Mirror unit

- Remove the super X (C-8008B) from the main mirror shafts (#198 and #199).
- Remove the main mirror shafts (#198 and #199).
- Remove the mirror unit (#B2231).

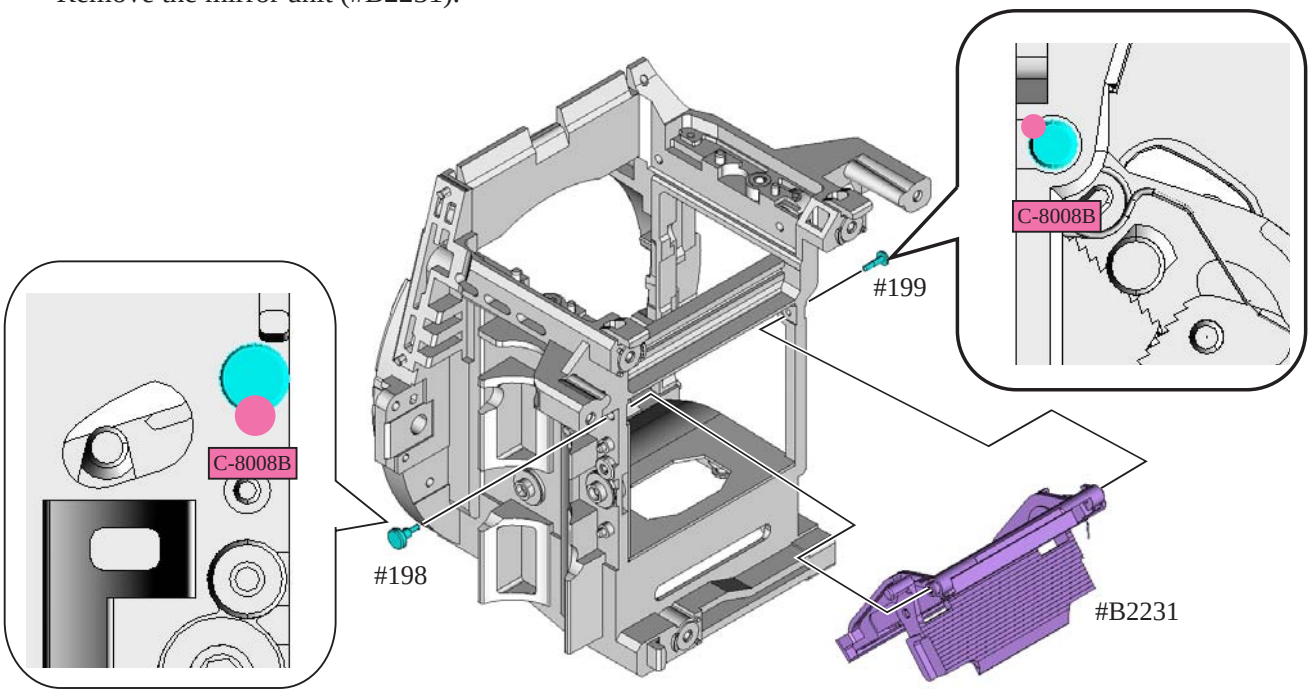

- Peel off the shading sheet (#238 and #239) and sheet (#496).
- Take out the two screws (#662), and remove the holder (#30).

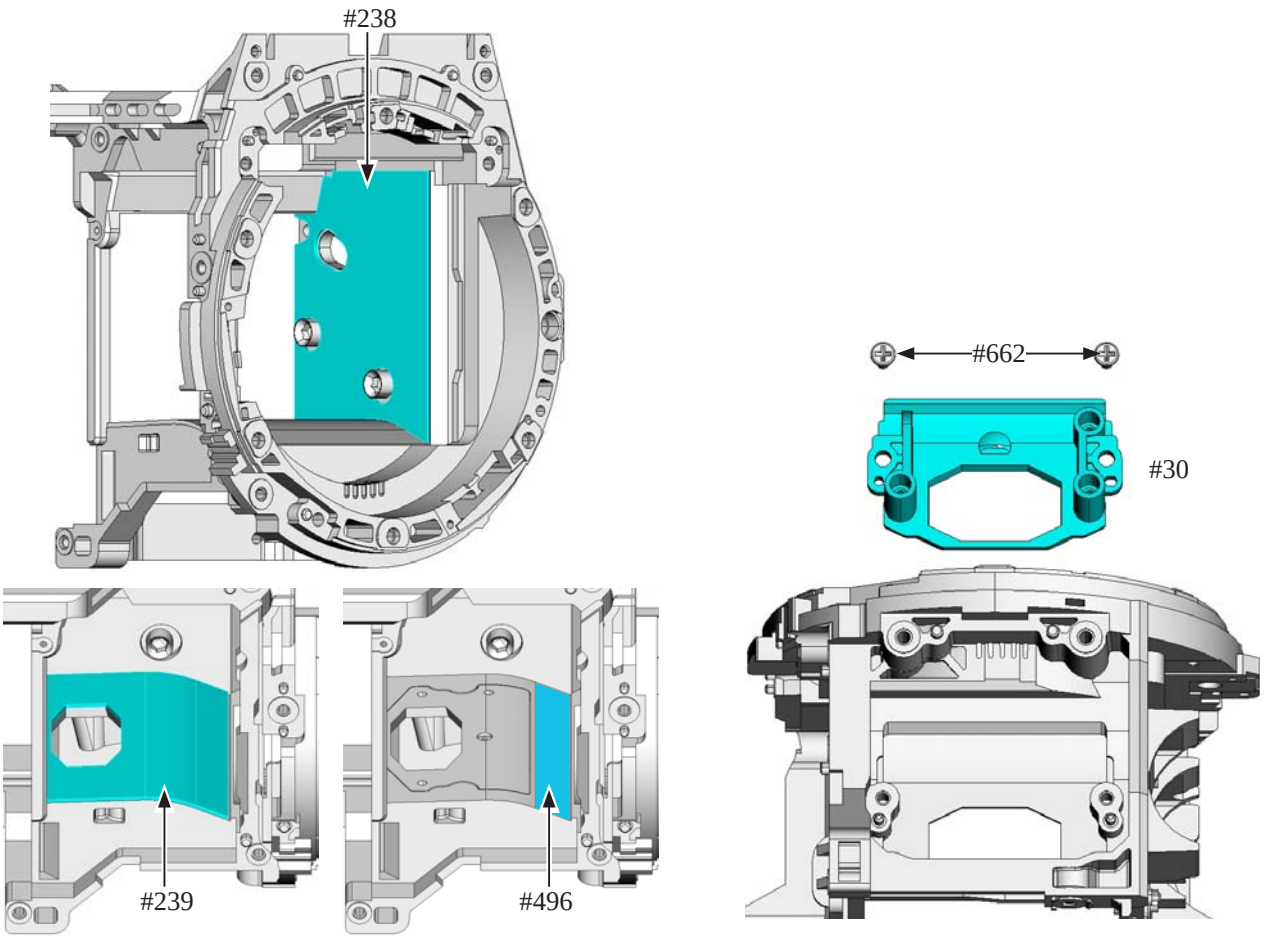

User ID:INC

Assembly

1. Front Body

Mirror unit

- Mount the holder (#30), and tighten the two screws (#662).
- Attach the sheet (#496), shading sheets (#238 and #239).

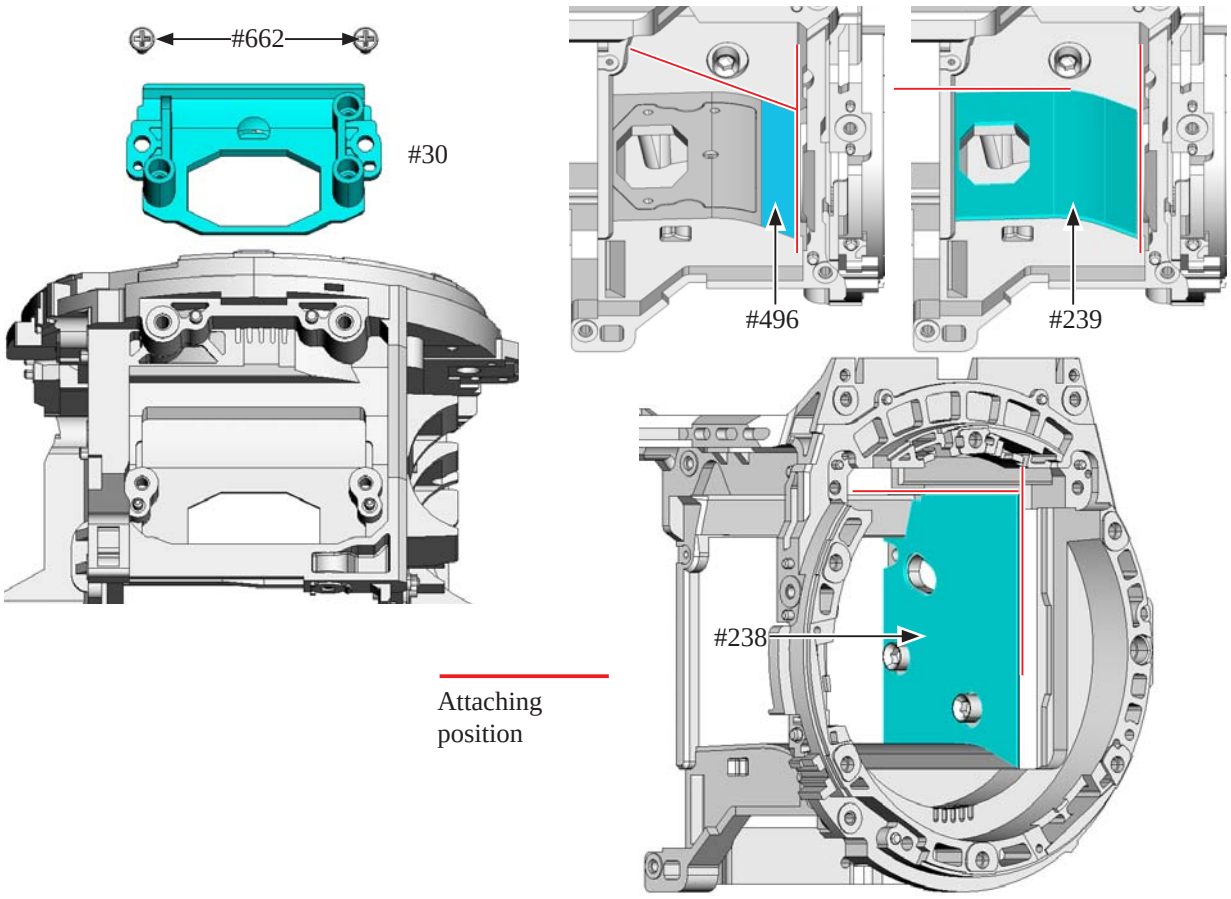

- Mount the mirror unit (#B2231), and attach the main mirror shafts (#198 and #199).
- Apply the adhesive (C-8008B) to the main mirror shaft.

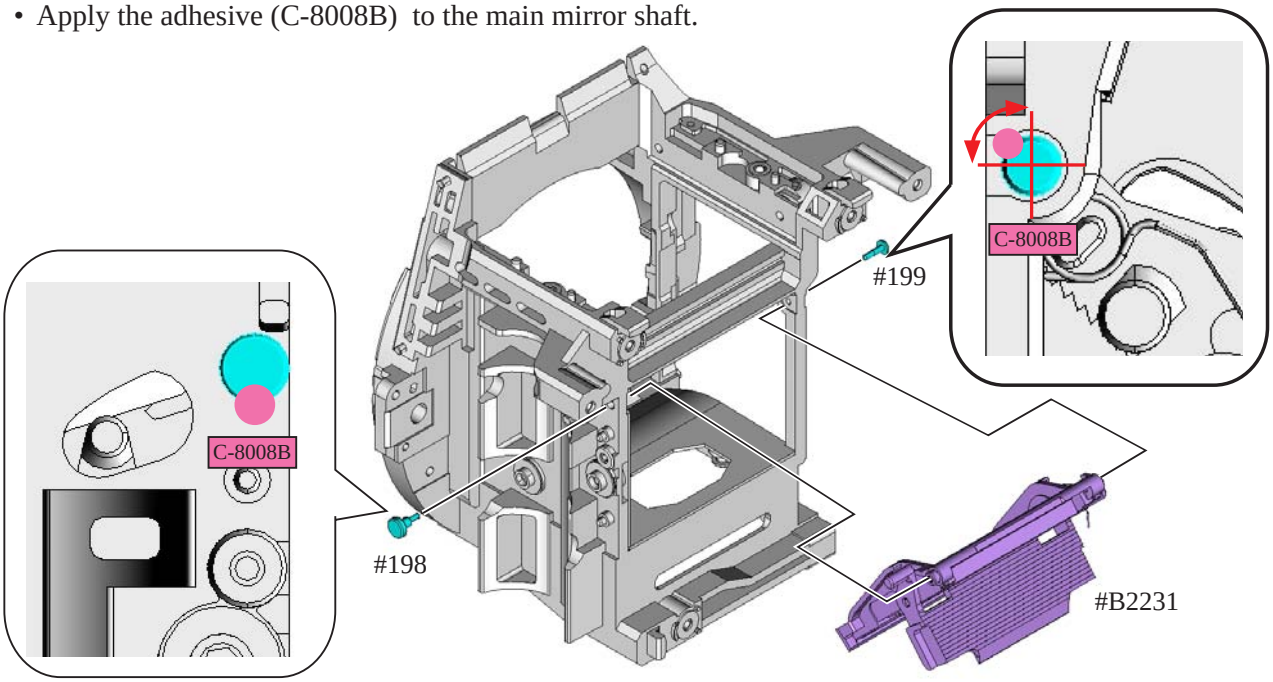

User ID:INC

Lens release button unit

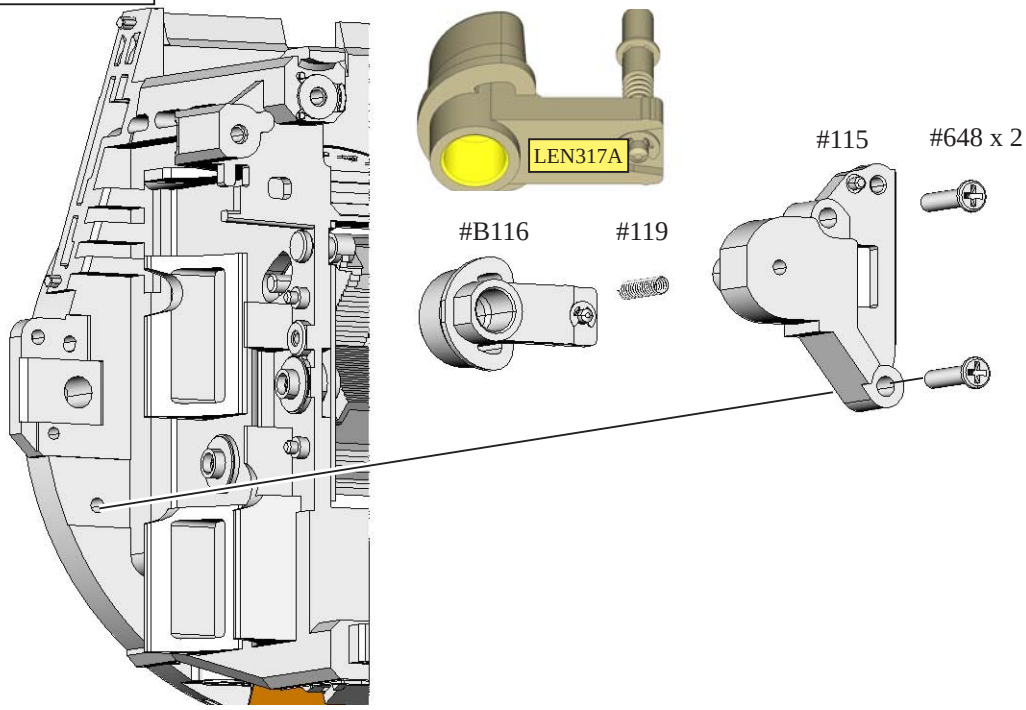

AF sensor unit

- Attach the three springs (#161).
- Attach the tape (#39) to the AF sensor unit (#B2163).
- Mount the AF sensor unit (#B2163).
- Turn the three screws (#162) all the way with the hexagonal key (φ1.5mm) but not too tightly, and then give each screw two turns counterclockwise.

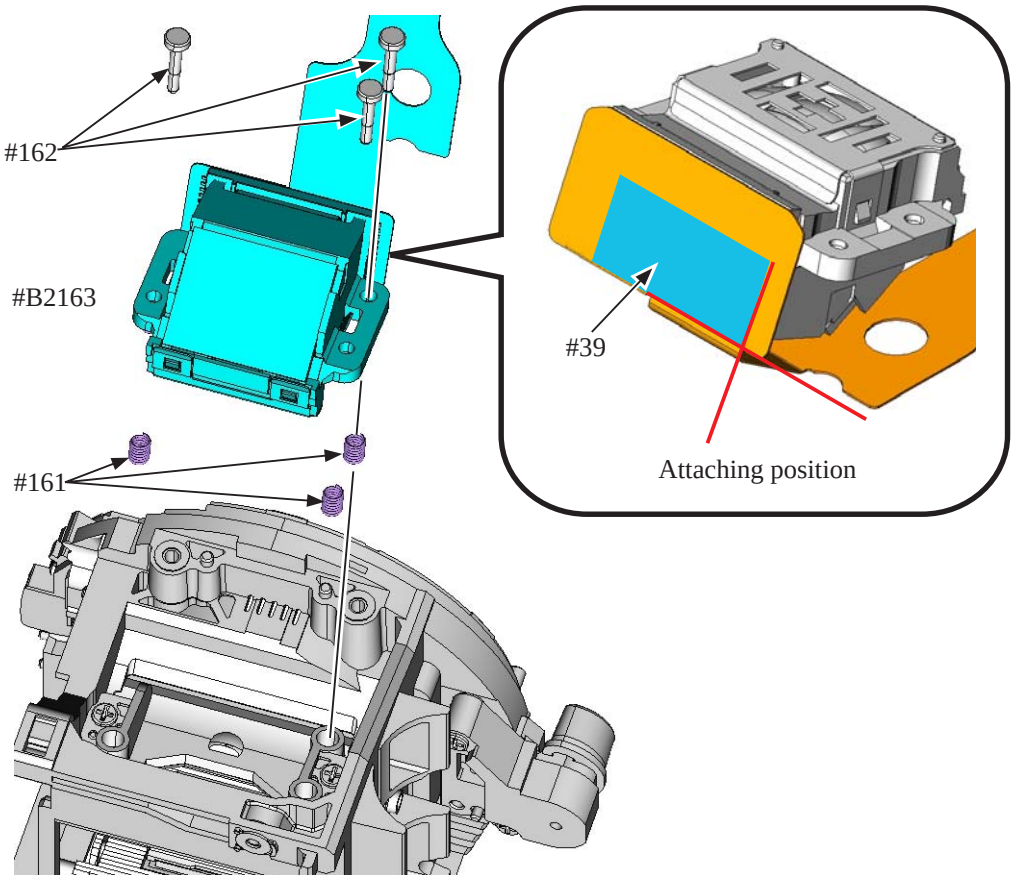

User ID:INC

Lens contact unit

- While lifting the FPC, mount the lens contact unit (#B2113).

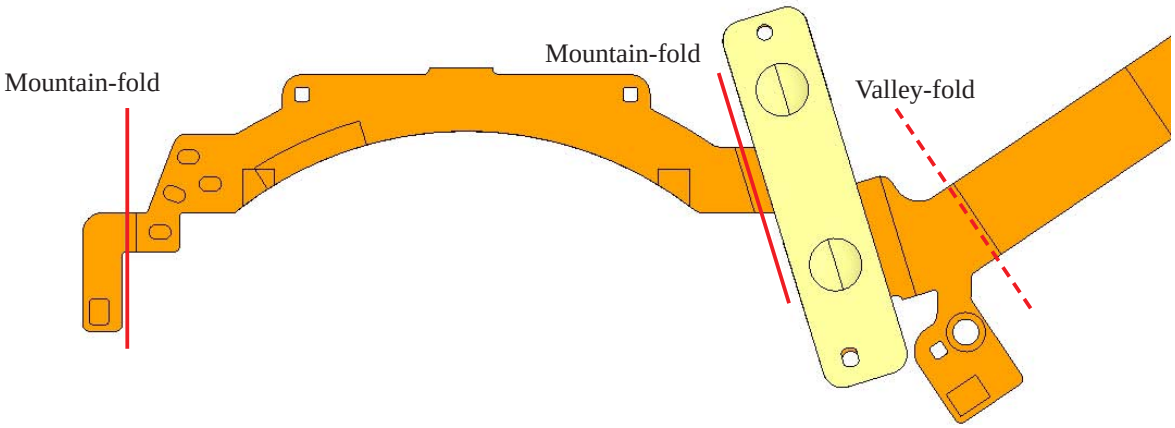

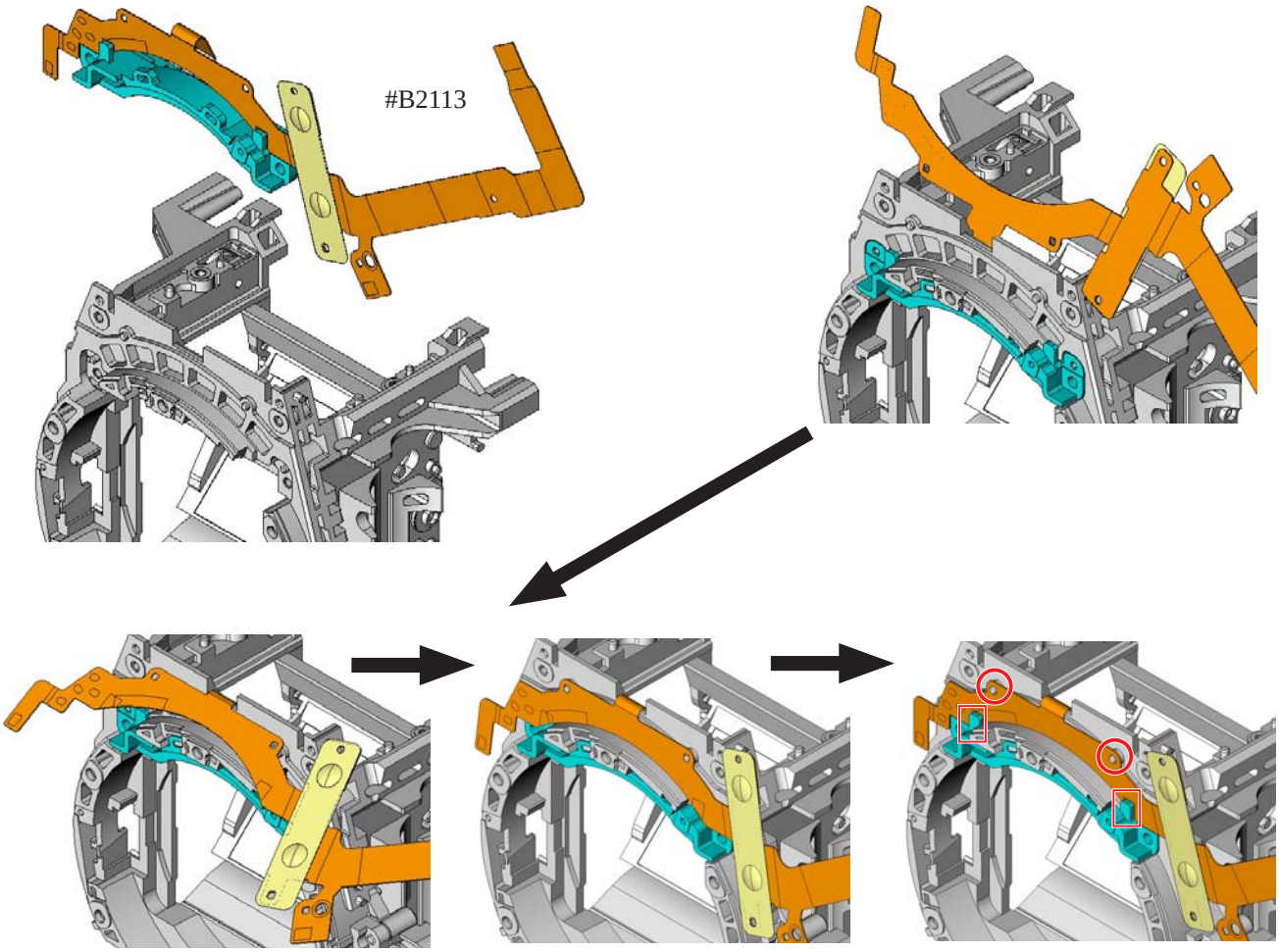

User ID:INC

- Attach the double-stick tape [TA-0026 (6×11)].
- Mount the lens release SW (#121).
- Tighten the screw (#652).

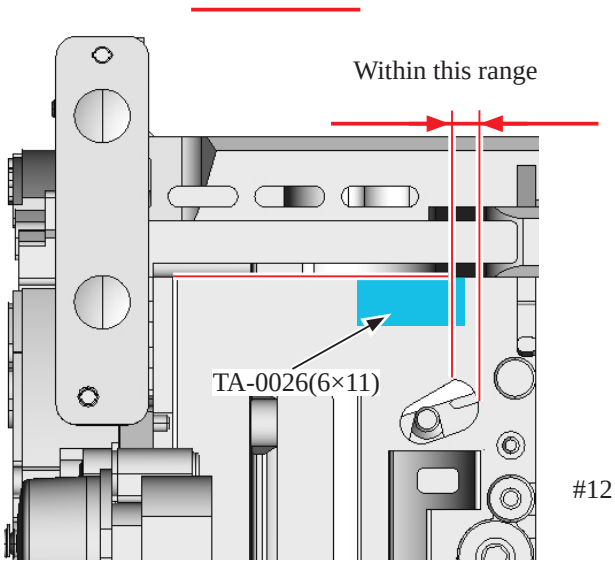

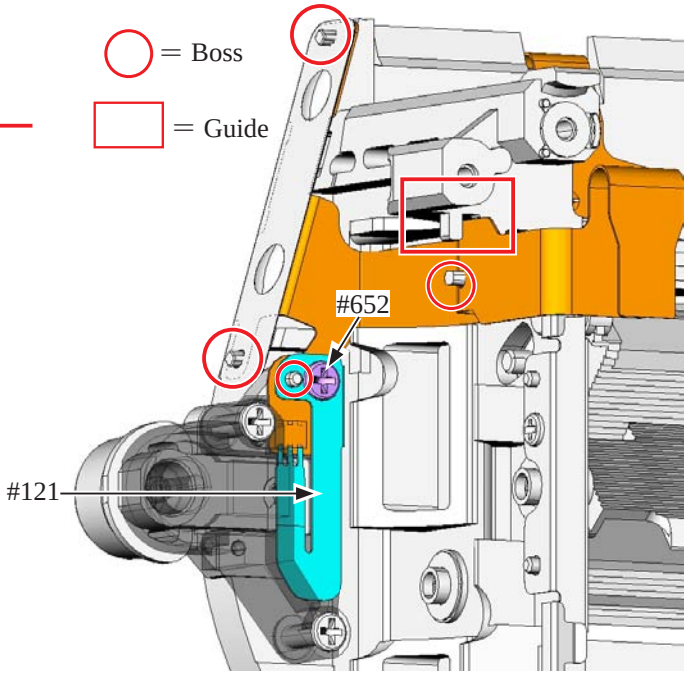

- Mount the GND plate (#138), and tighten the two screws (#650).
- Make solder bridge.

Make solder bridge.

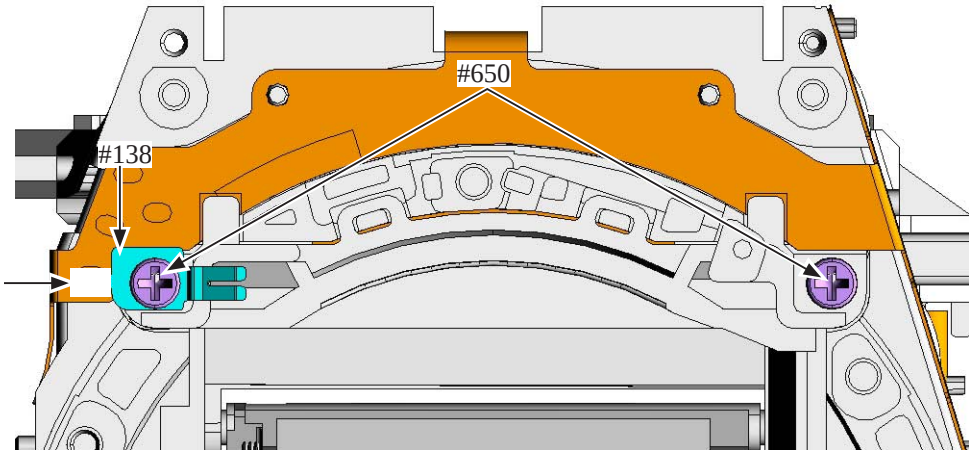

User ID:INC

F-min SW

- Mount the F-min SW (#133), and tighten the screw (#668).
- Make a solder on the F-min SW (#133) and the FPC of the lens contact unit (#B2113).
- Attach the tape [TA-0009 (5×7)].

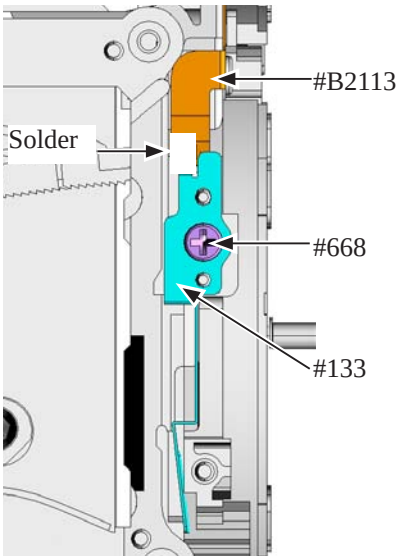

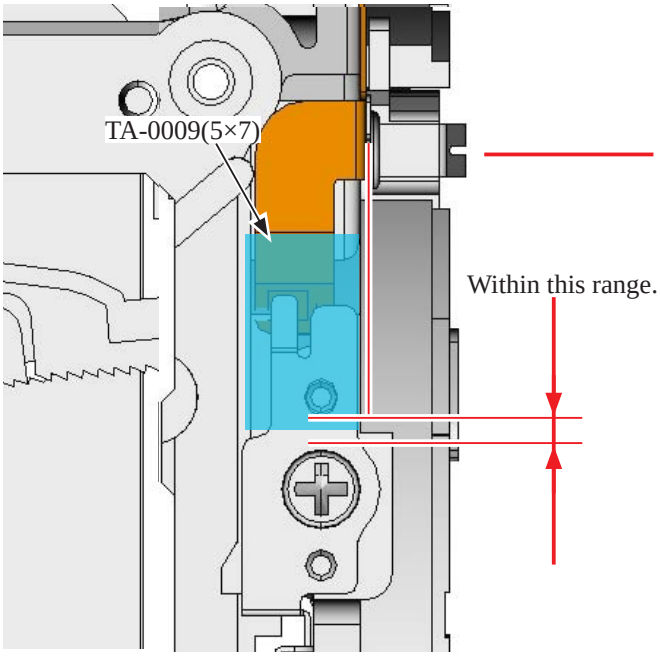

Bayonet mount

- Attach the gasket (#489).

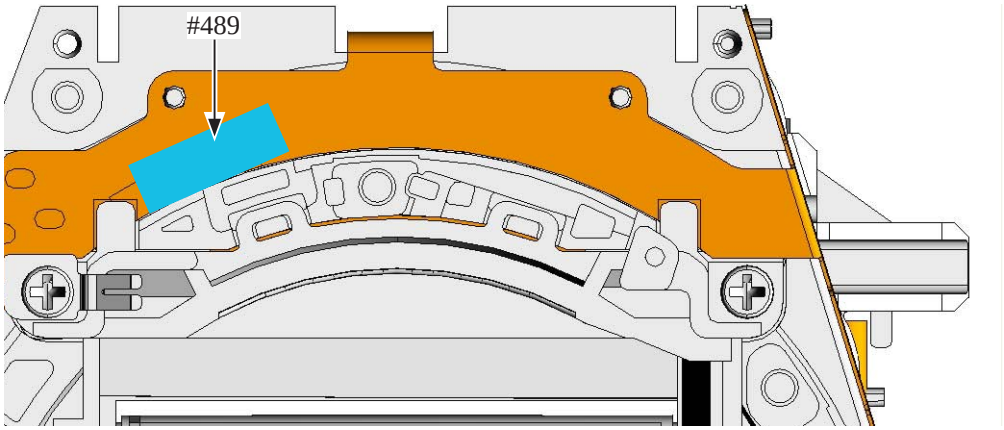

User ID:INC

- Attach the F-min coupling block (#131), and mount the GND plate (#137) in the numeric order from ① to ③ by fitting the boss.
- Tighten the screw (#655).

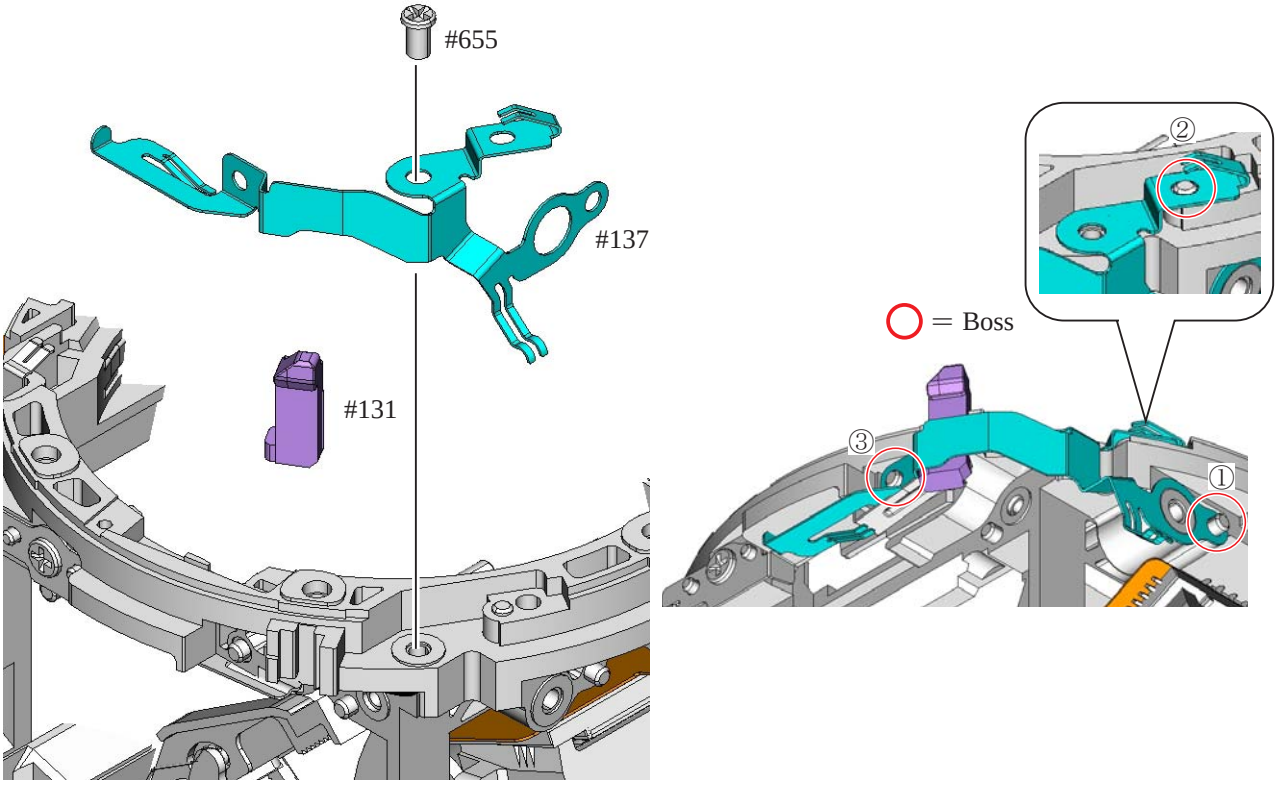

- Attach the three bayonet springs (#112).
- Mount the bayonet mount (#111).
- Tighten the five screws (#653) and one screw (#654) in the numeric order from ① to ⑥ .

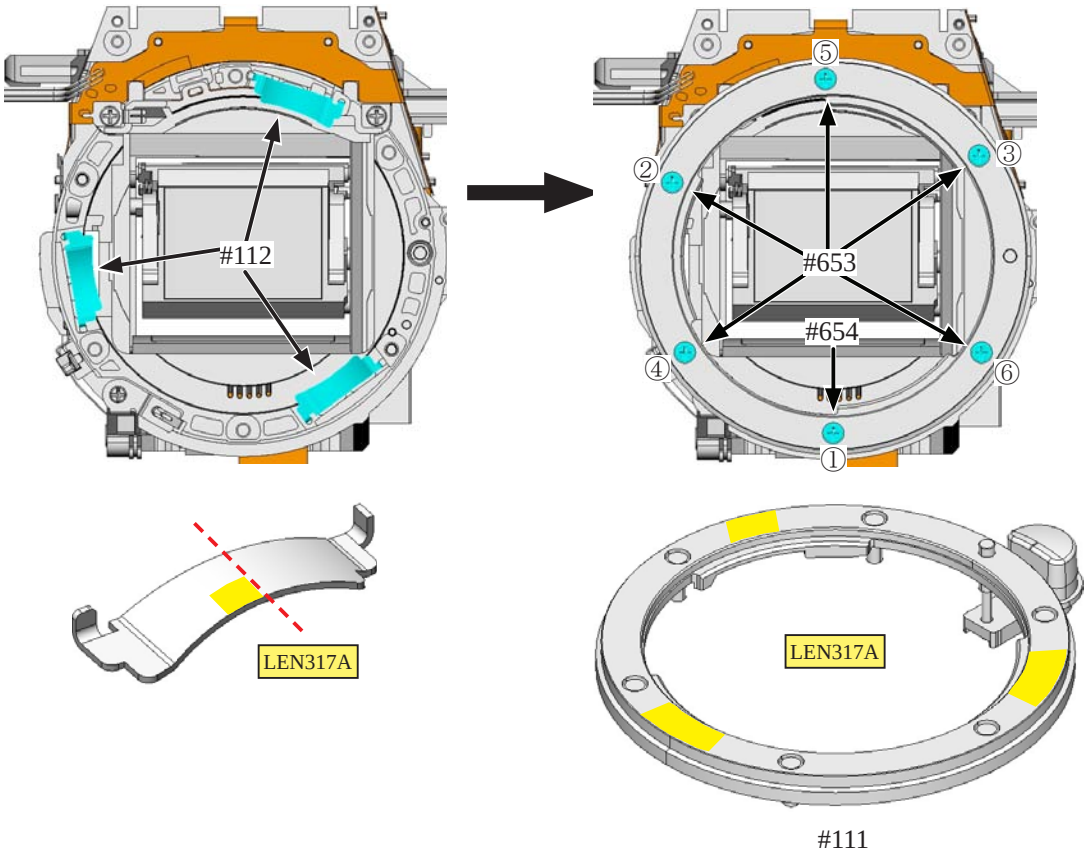

#111

User ID:INC

- Attach the shading sheet (#29).
- Turn the gear indicated in red in the direction of the arrow to lower the mirror of the aperture lever section of the SQ PCB unit (#B2177).
- Mount the SQ PCB unit (#B2177) by fitting its aperture lever section in a gap of the front body.

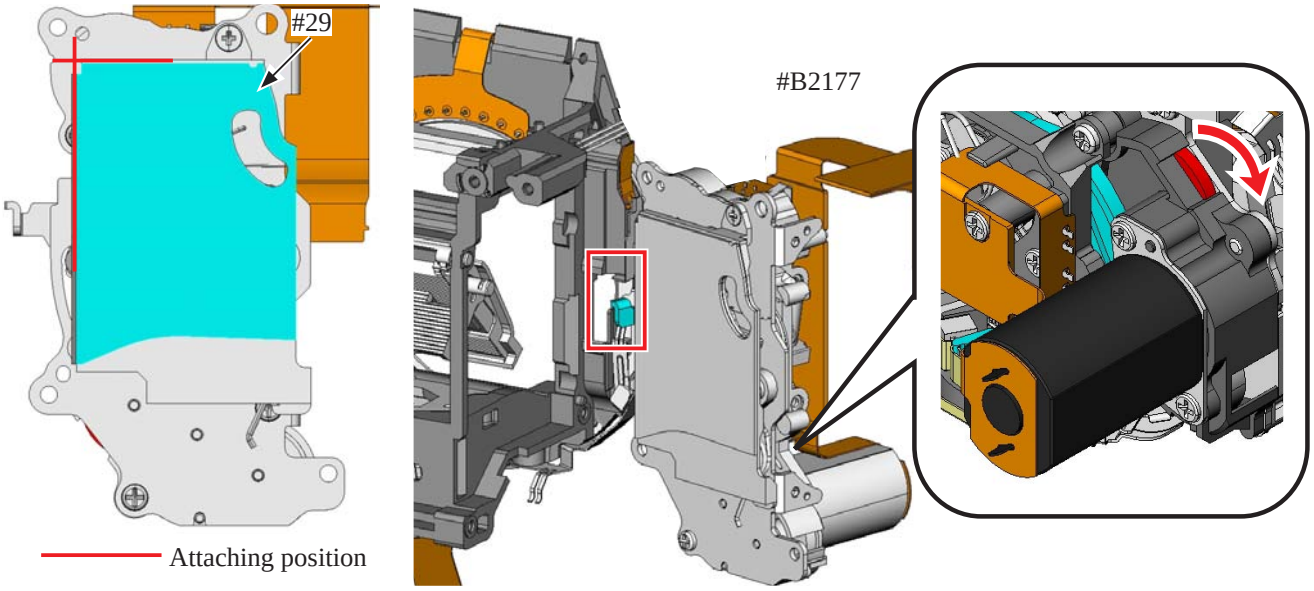

- Tighten the four screws (#602) temporarily.
- With the slightly lifting the SQ unit, hook the spring to the mirror unit.
- Do final tightening of the four screws (#602) in the numeric order from ① to ④ .
- After assembling the above, check whether the aperture lever section works smoothly.

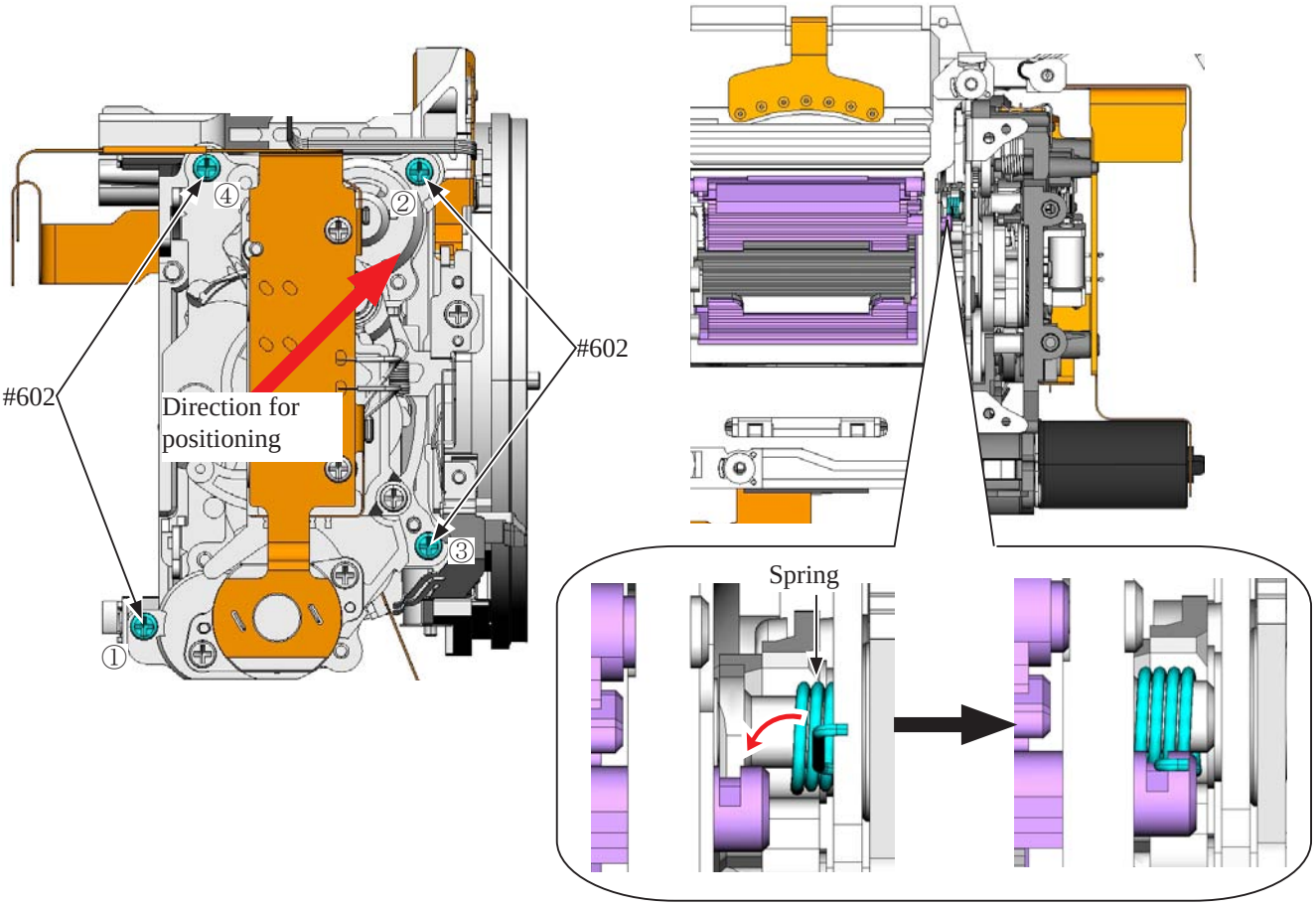

User ID:INC

Height adjustment of aperture lever

- Refer to "Height adjustment of aperture lever" of ADJUSTMENT Separate Volume ① for details.
  Standard: 3.3 - 3.6 mm

Tool (device)
J18004 Aperture lever positioning gauge

MG PCB unit

- Turn the gear (indicated in red) of the SQ PCB unit in the direction of the arrow to raise the mirror. Then, set the lever's position of the MG PCB unit to the "OK" position as below.
  Caution: It may require turning the gear several times to become at "OK" position.

SQ PCB unit

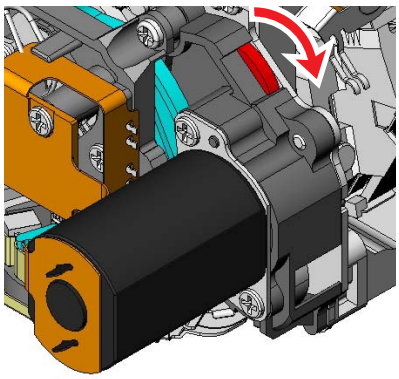

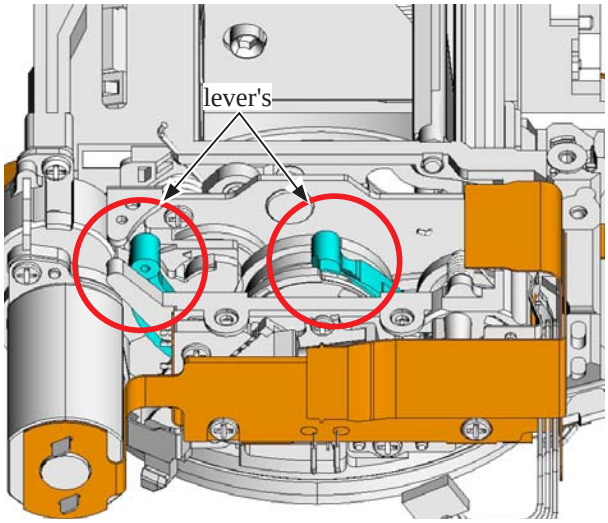

OK

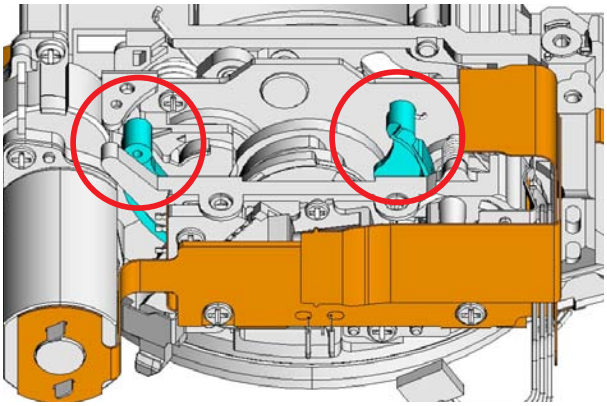

NG: Not Good

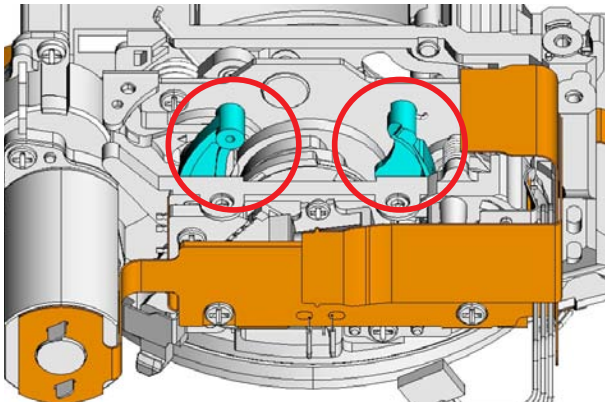

NG: Not Good

User ID:INC

- Mount the MG PCB unit (#B176).
- Tighten the two screws (#607) in the numeric order from ① to ② .
- After the above tightening, check whether the lever works smoothly.

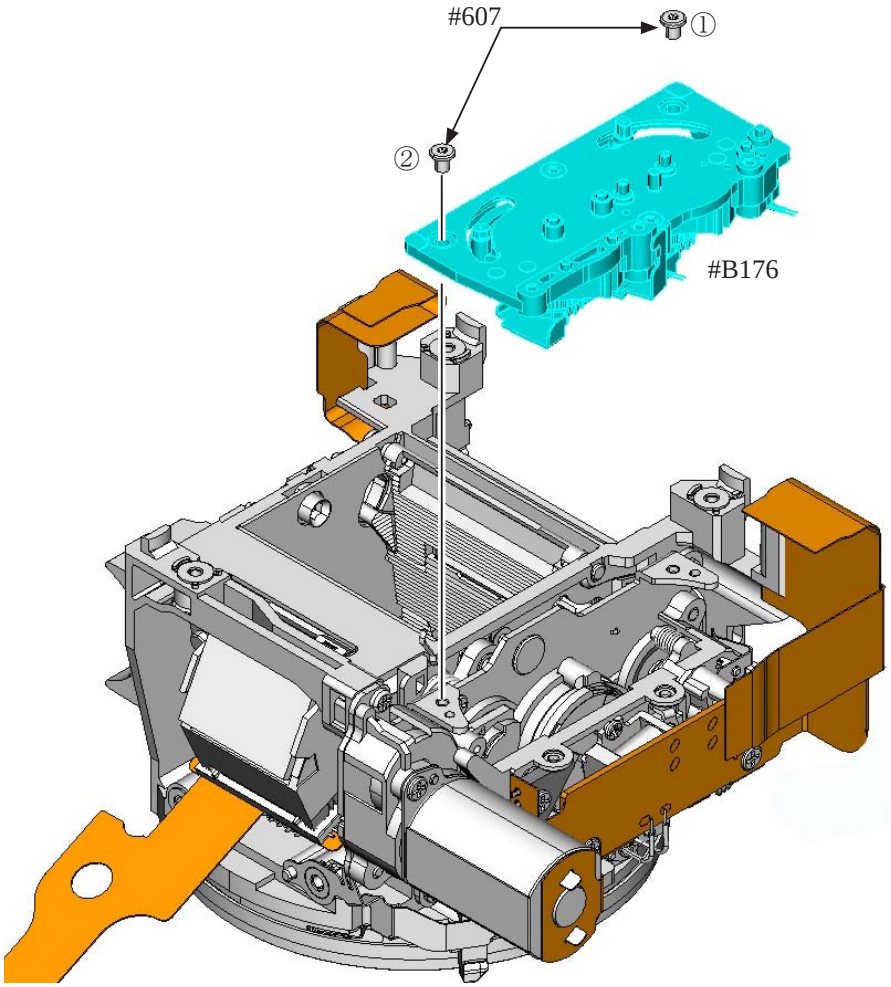

- Solder the four wires.

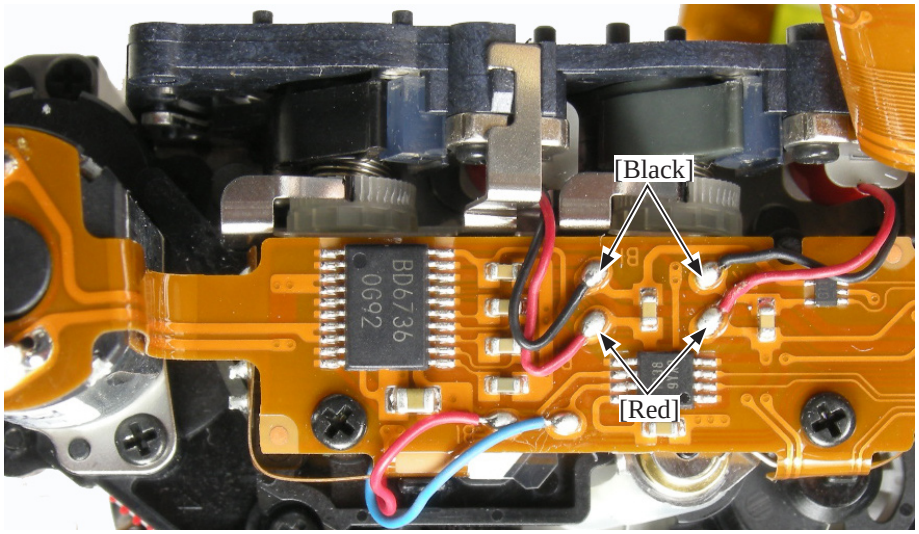

User ID:INC

Shutter PCB

- Mount the shutter PCB unit (#2001RP).

  Caution: To avoid deformation of [#2001RP], do neither hold the other areas than indicated in red, nor let [#2001RP] be placed on the shaft.

- Tighten the screw (#619).

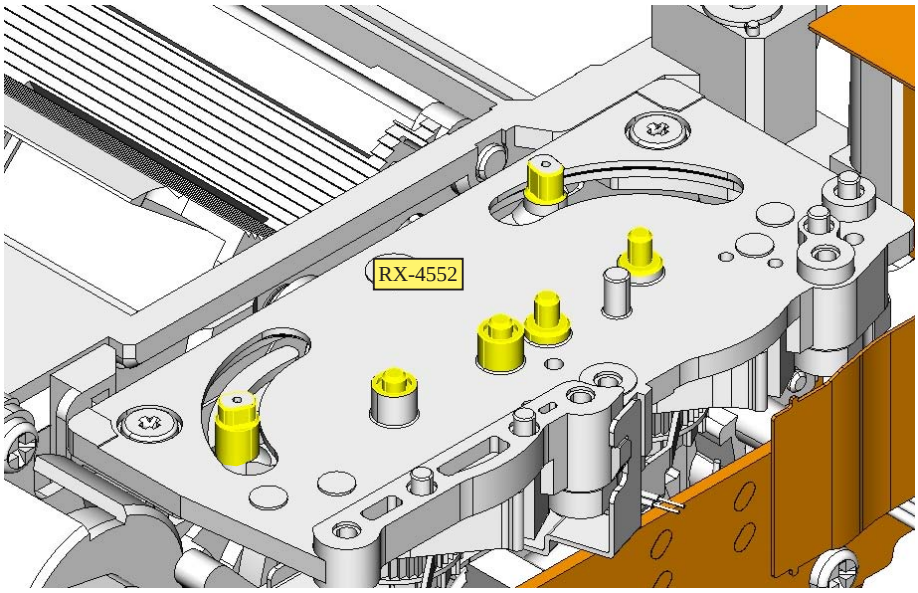

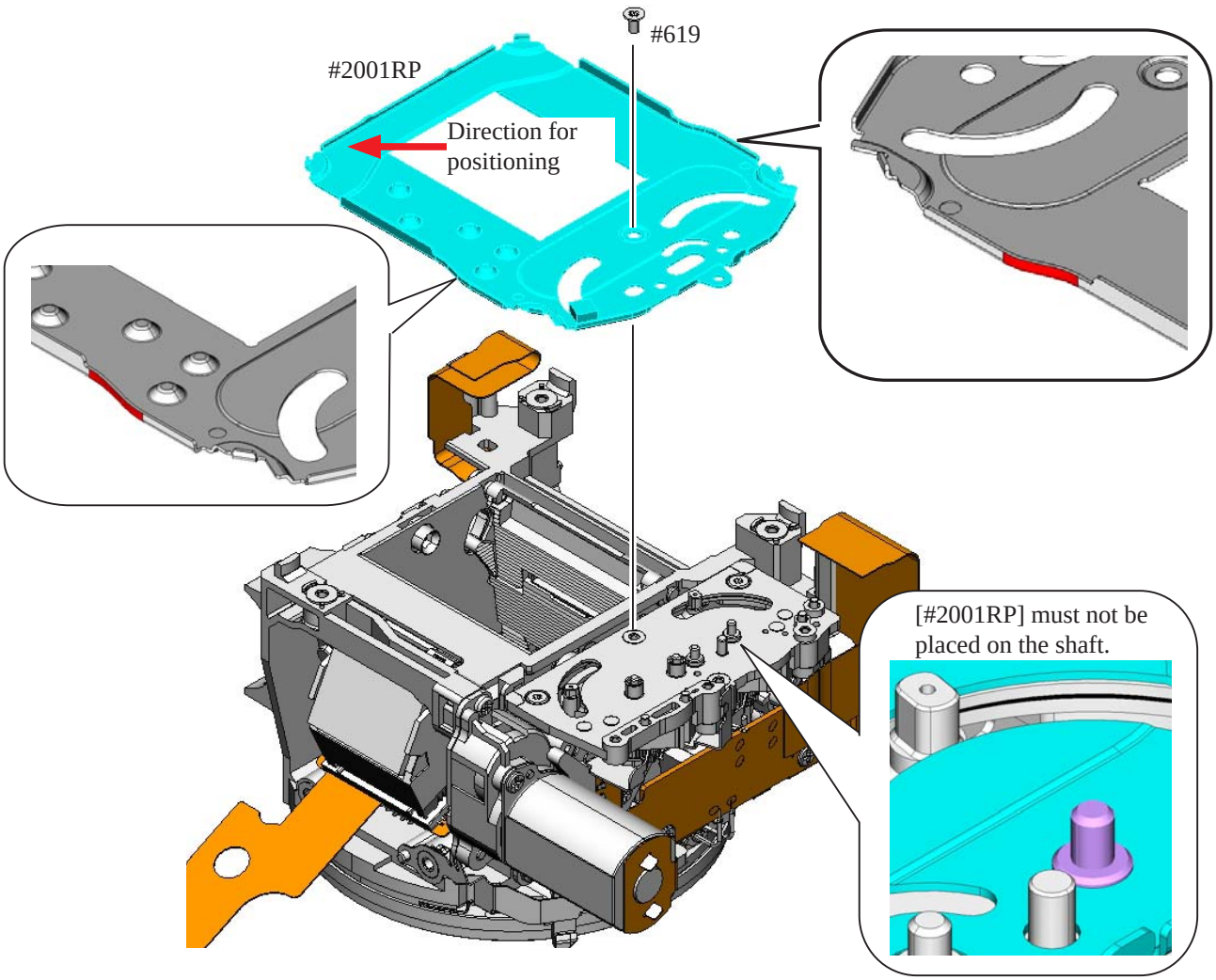

User ID:INC

- Mount the shutter curtain unit (B2016).
- Attach the spring (#179). (At this point, do NOT engage the hook.)
- Mount the retainer plate (#2015).

This circle must face the penta prism side.

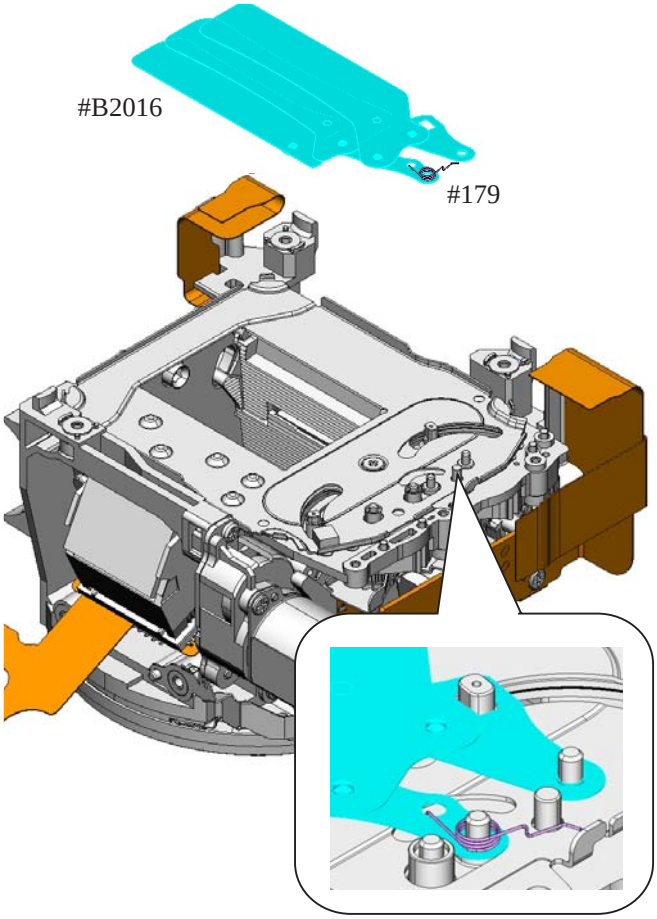

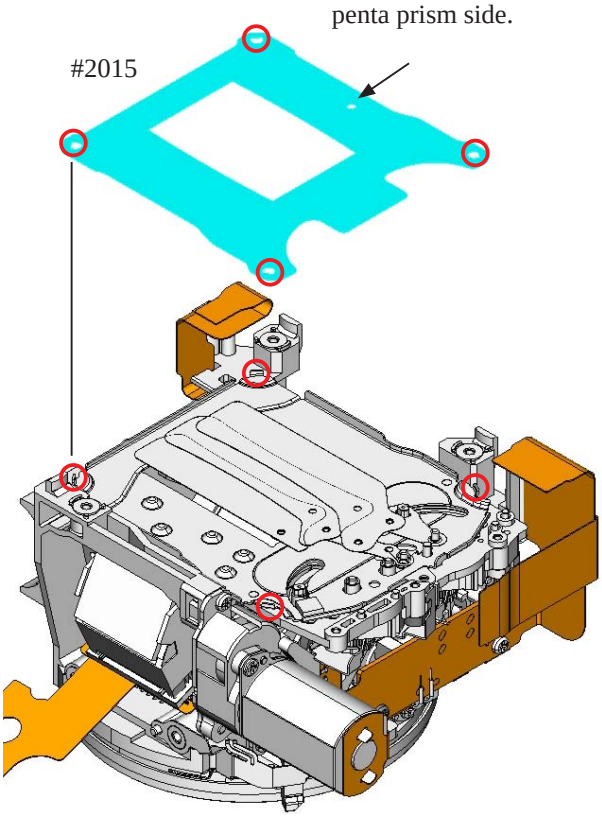

- Attach the spring (#178).
- Mount the shutter curtain unit (#B2016).

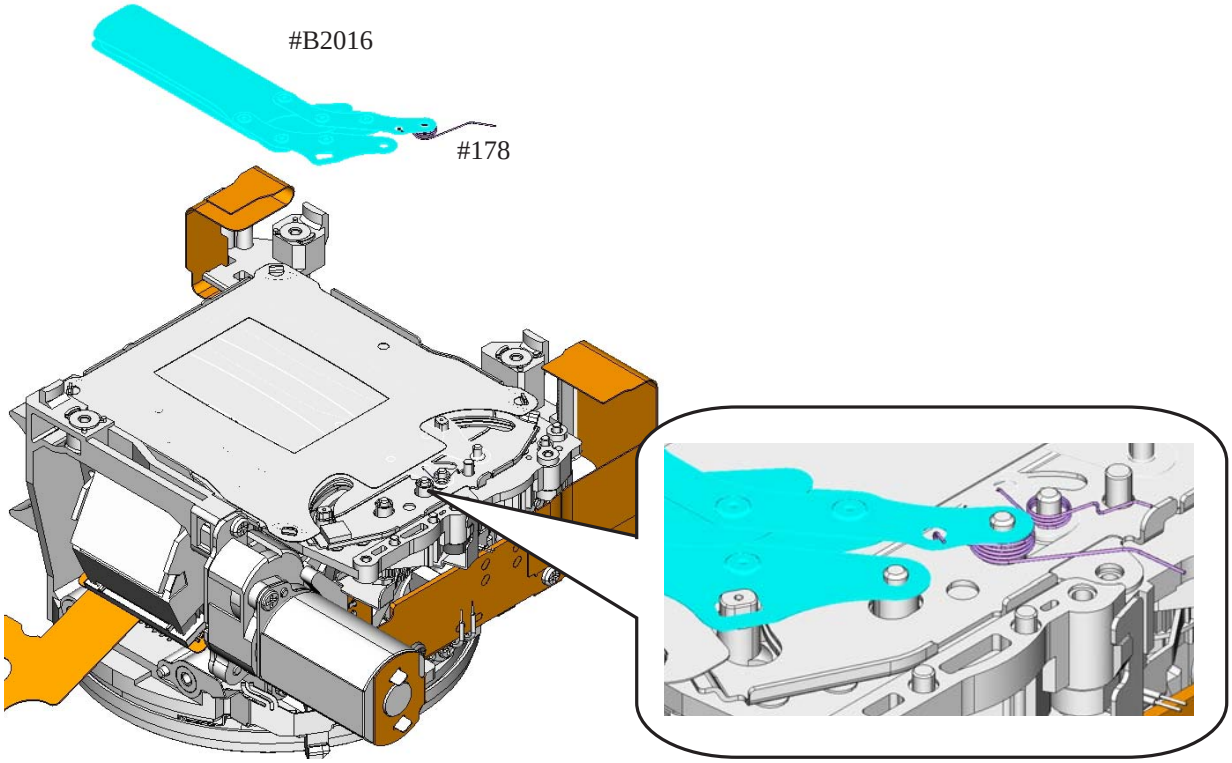

User ID:INC

- Hook the springs (#178 and #179) each.
- Mount the holder plate (#2002).

  Caution: Be careful that the spring may pop out. To avoid deformation of [#2002], do NOT hold the other areas than indicated in red.
- Tighten the screw (#608).

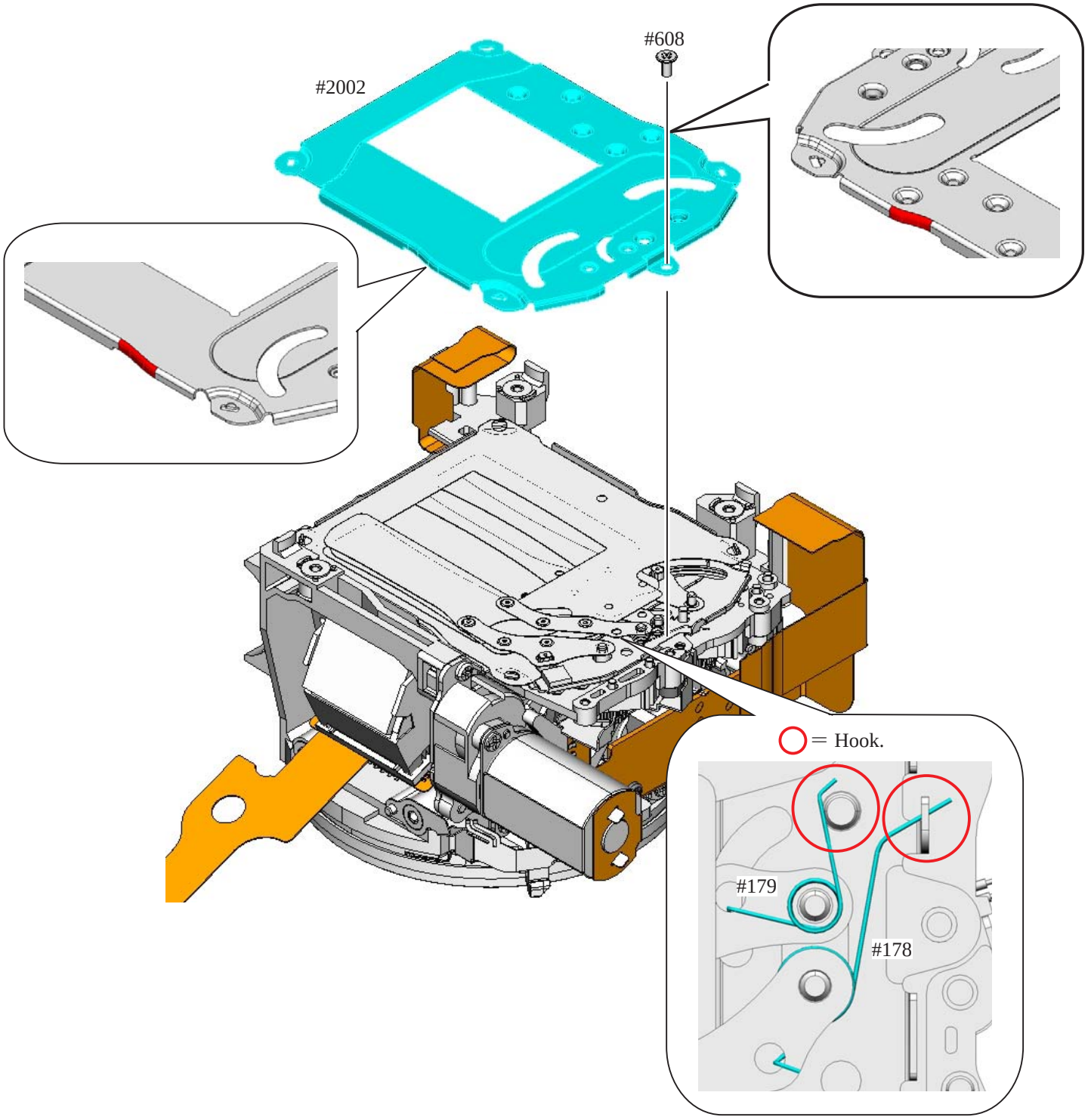

User ID:INC

- Mount the retainer plate (#2003).
- Tighten the screw (#604).

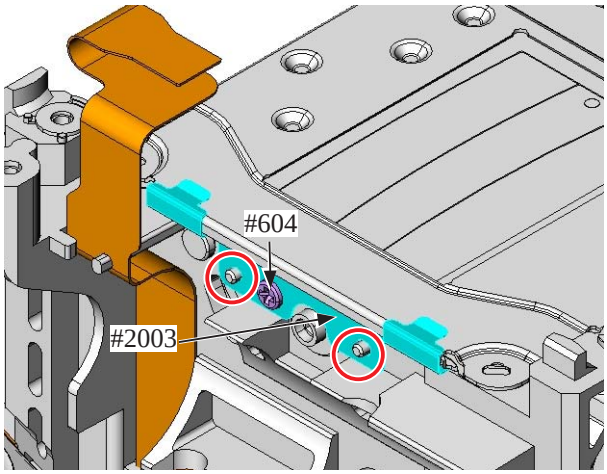

○ = Boss

- Mount the brake plate (#196), and tighten the two screws (#612).

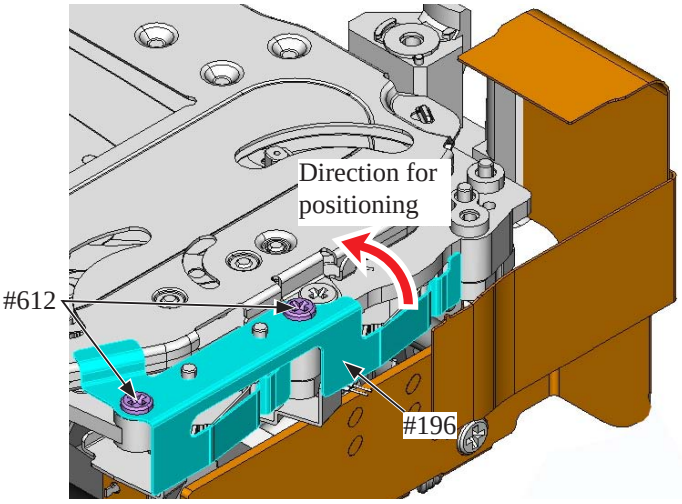

- Mount the retainer plate (#2004), and tighten the screw (#612).

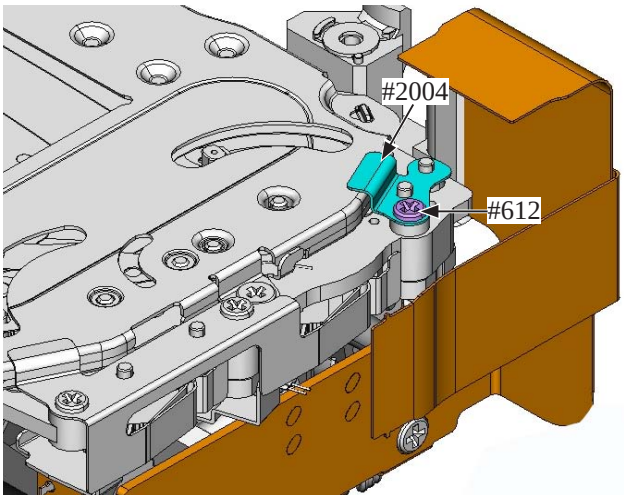

User ID:INC

Adjustment of shutter curtain speed

- Connection of the curtain speed adj. dummy body (J61245) to the curtain speed adjuster (J61242).
  ① Connect the power connector (EP-5A) to the camera.
  ② Connect the camera and PC through the USB cable (UC-E4), and turn the camera ON.
  ③ On the setup menu of the camera, change the setting when no memory card is inserted from "Release locked" to "Enable release".
  ④ Start the adjustment software for camera body (except imaging) (J65153), and click "MAKE A CURTAIN SPEED ADJ. DUMMY BODY".
  ⑤ Select "Yes".
  ⑥ Turn the camera OFF, and disconnect the camera from PC.
  ⑦ Remove the rear cover.
  ⑧ Remove the FPC of the SQ unit.

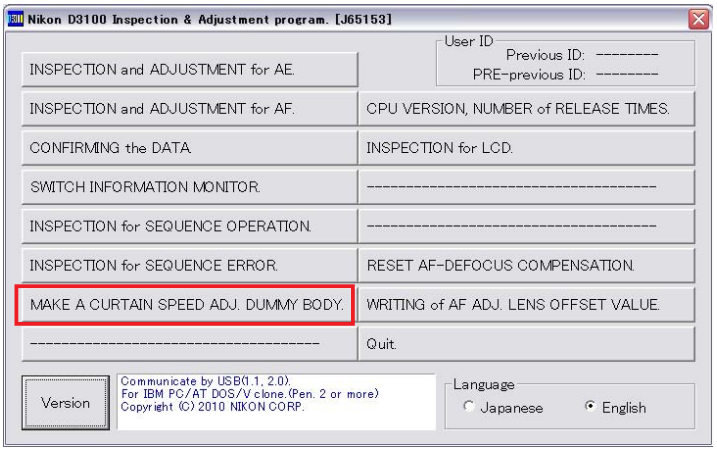

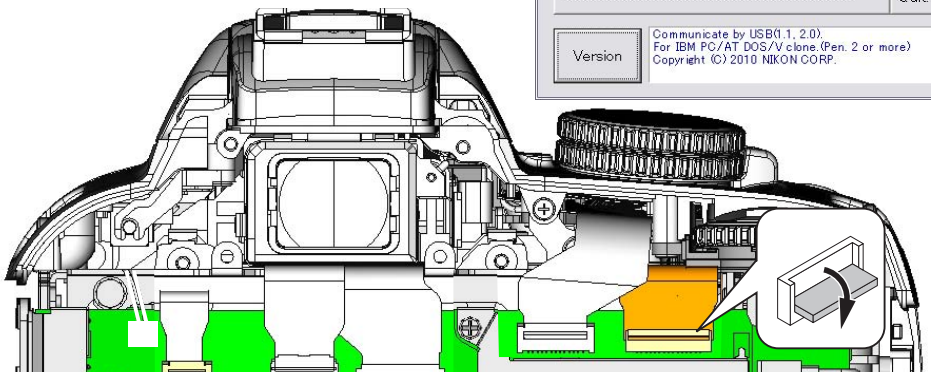

- Refer to "Adjustment of shutter curtain speed" of ADJUSTMENT Separate Volume ① for details.
  Setting: 1/4000 sec.
  Standard: Front curtain/Rear curtain: 3.45 - 3.55 ms,
  Difference in speed between front and rear curtain: fm -0.02 to +0.02 ms
  Caution: When the shutter PCB and MG PCB are replaced/disassembled/reassembled, release the shutter 20 times, and then make adjustments. Also when the retaining plate is lifted to avoid the tension of the spring, be careful not to bend the retaining plate.

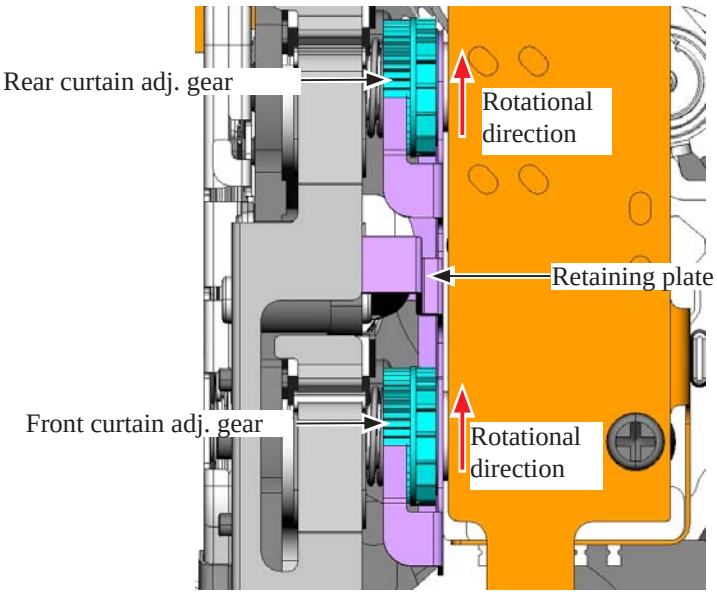

User ID:INC

Tool (device)					
J19123 EF-1	Unavailable EF-8000	J19123E For EF-1	J19042E For EF-8000	J61242 Curtain speed adjuster	J18267 LENS AF50/1.4D
Shutter tester		T.V. Measuring adapter			
Power supply (10V 5A)		Power connector EP-5A		AC adapter EH-5 or EH-5A	J61245 Curtain speed adj. dummy body

Inspection and adjustment of flange-back (body-back)

- Put the washers (#87 - #107).
- Refer to " ① Models WITHOUT rear body" of "Inspection and adjustment of flange-back (body-back)" of ADJUSTMENT Separate Volume ① for details.

Rotational direction/scale: Turn counterclockwise by 28 divisions of scale (0.28mm).
Standard of measured value: 44.39 ± 0.015mm/Parallelism: 0.015mm or less

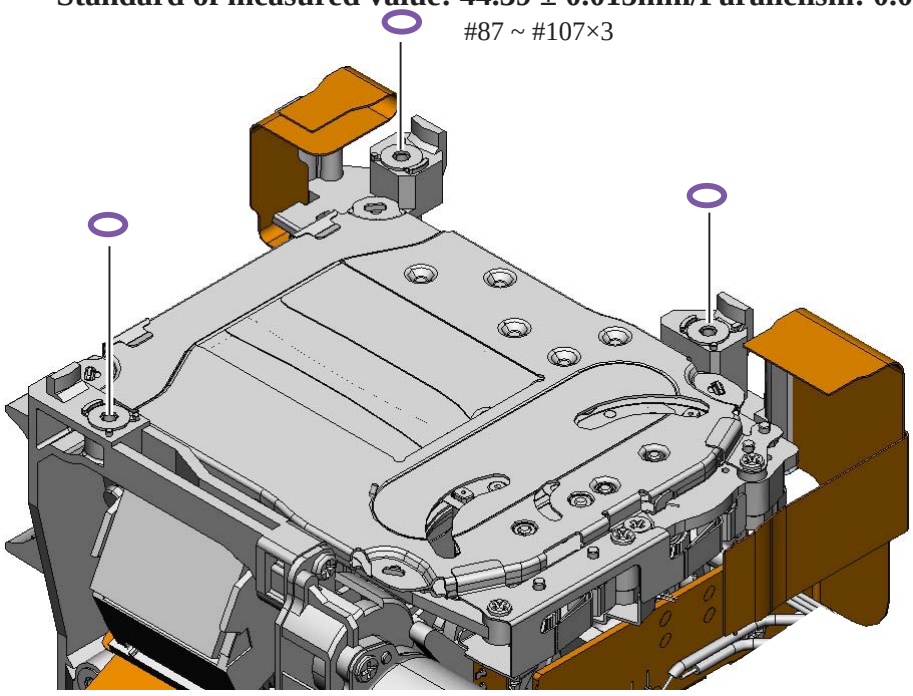

87	1K106-553	washer T=0.05
88	1K106-554	washer T=0.06
89	1K106-555	washer T=0.07
90	1K106-556	washer T=0.08
91	1K106-557	washer T=0.09
92	1K106-558	washer T=0.10
93	1K106-559	washer T=0.11
94	1K106-560	washer T=0.12
95	1K106-561	washer T=0.13
96	1K106-562	washer T=0.14
97	1K106-563	washer T=0.15
98	1K106-564	washer T=0.16
99	1K106-565	washer T=0.17
100	1K106-566	washer T=0.18
101	1K106-567	washer T=0.19
102	1K106-568	washer T=0.20
103	1K106-569	washer T=0.21
104	1K106-570	washer T=0.22
105	1K106-571	washer T=0.23
106	1K106-572	washer T=0.24
107	1K106-573	washer T=0.25

Tool (Device)		
J19004-1 Dial indicator and stand	J18001-1 Body-back focus gauge	J11388 Flat-type measuring terminal

User ID:INC

Image sensor unit

- Mount the image sensor unit (#B3051).
- Put the three washers (#80). Tighten the three screws (#634) in the numeric order from ① to ③ .
- Attach the tape (#59).

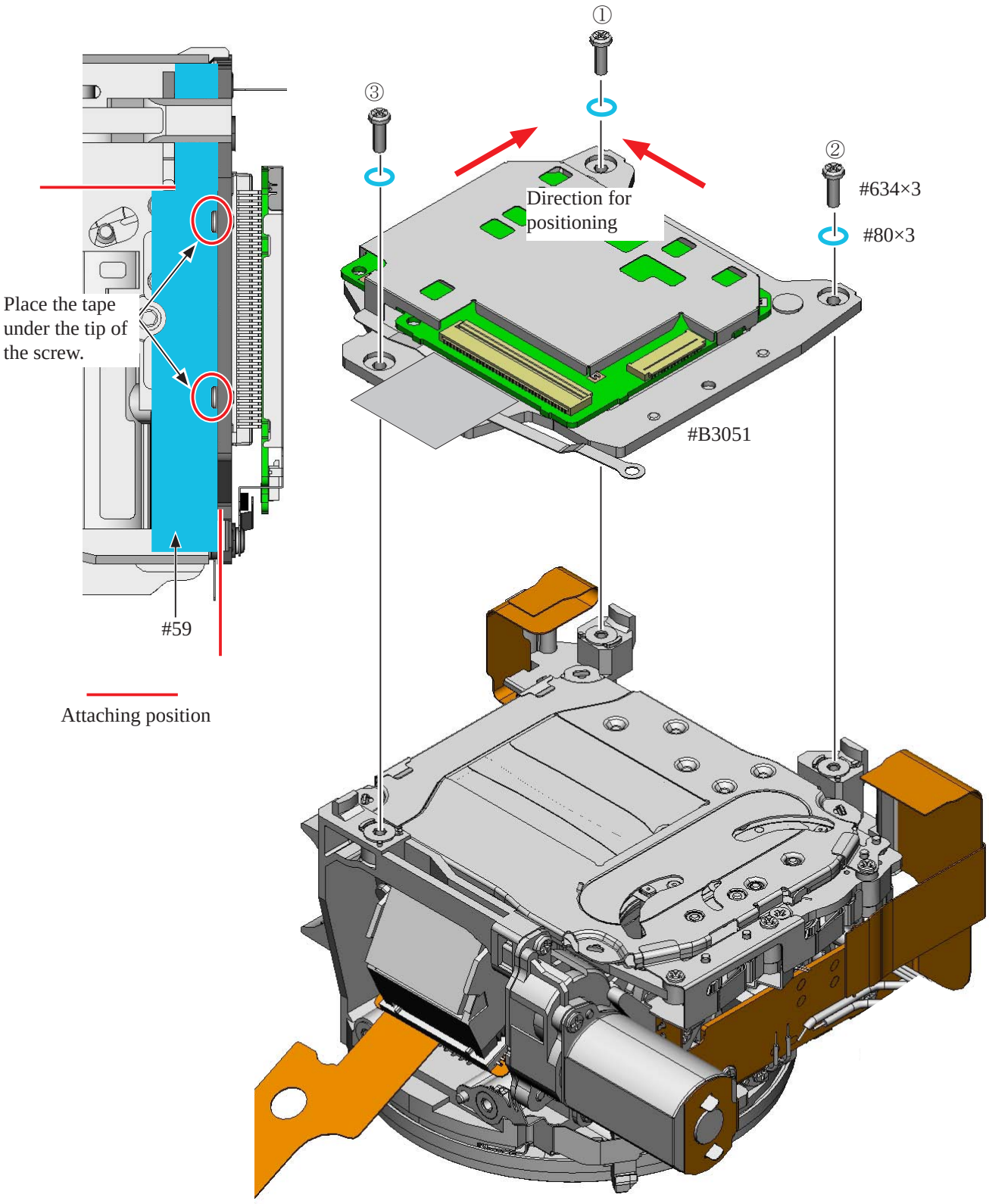

User ID:INC

- Solder the three wires of the harness (#1028).
- Attach the tape [TA-0016 (5×8)].
- Arrange the wires.

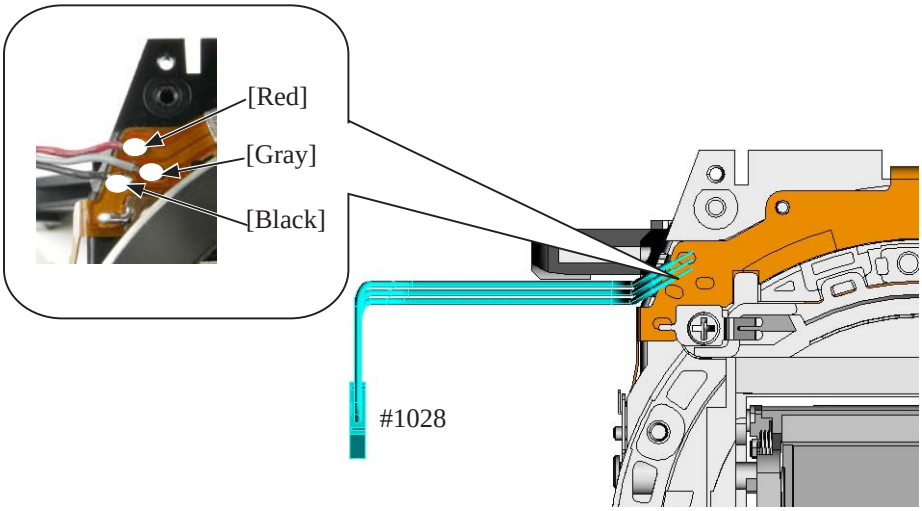

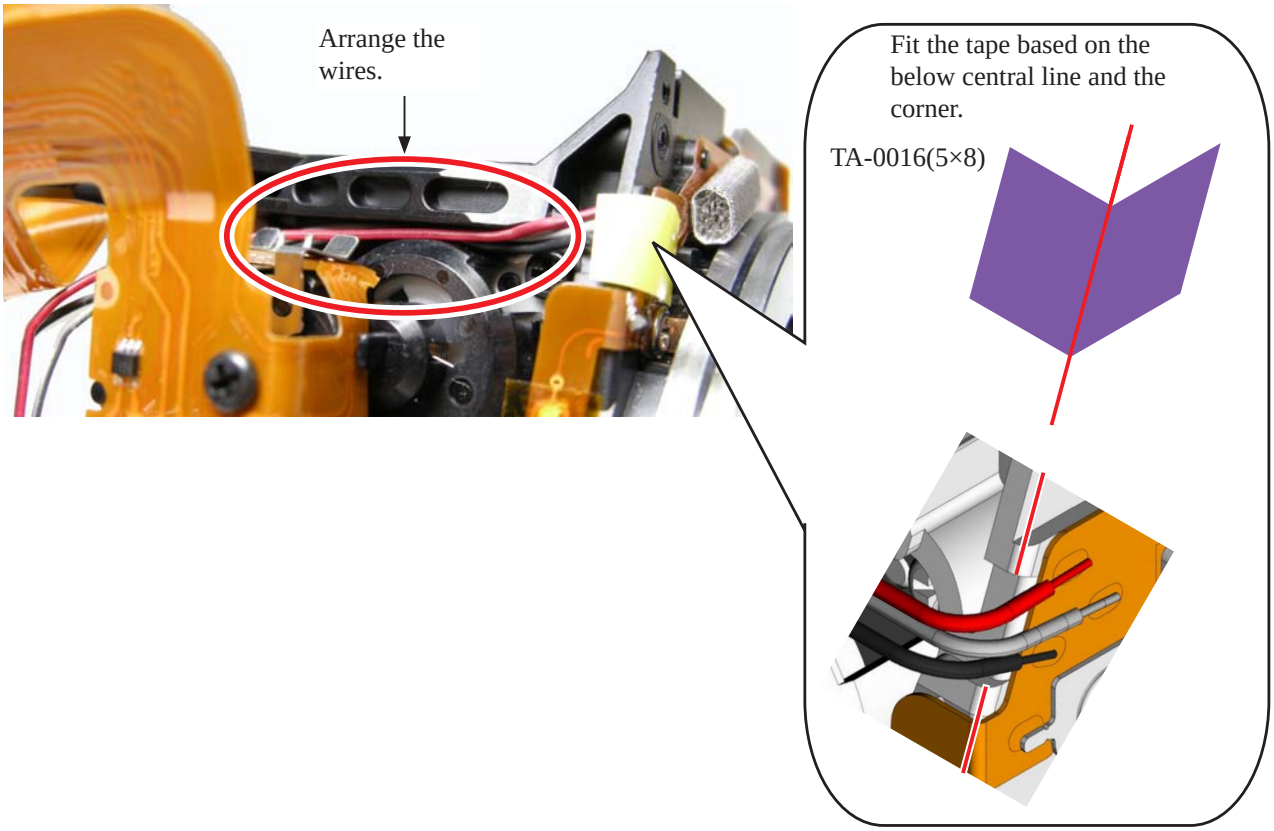

User ID:INC

2. Sub-frame

Bottom plate unit

- Attach the tripod base (#68) to the bottom plate (#61), and tighten the four screws (#630).

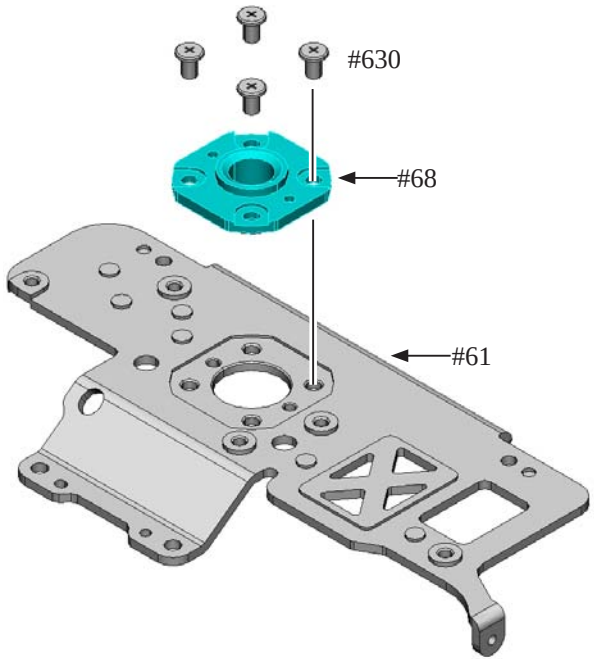

- Attach the shield sheet (#65) to the bottom plate unit.

Attach by fitting each round hole.

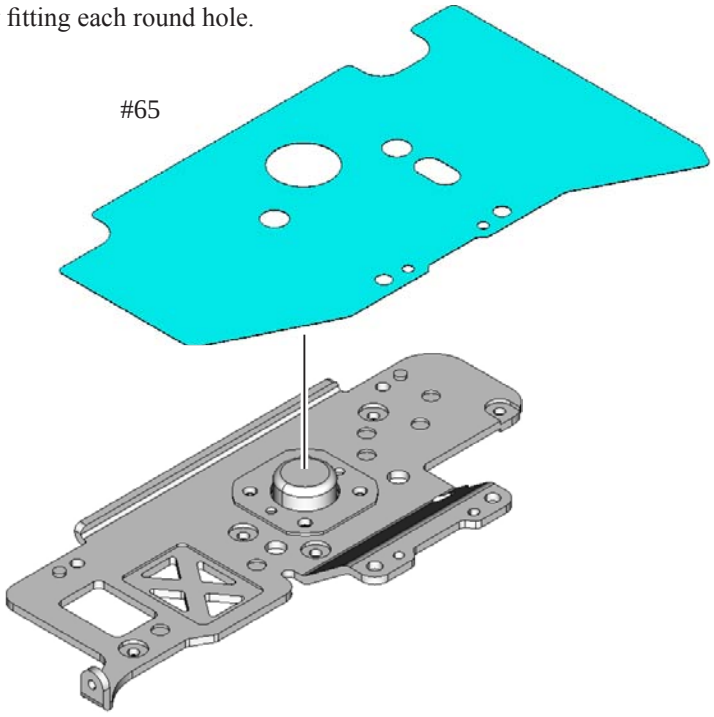

User ID:INC

• Attach the double-stick tape [TA-0026 (5×40)] to the bottom plate (#61), and attach the two wires of the condenser on the tape.

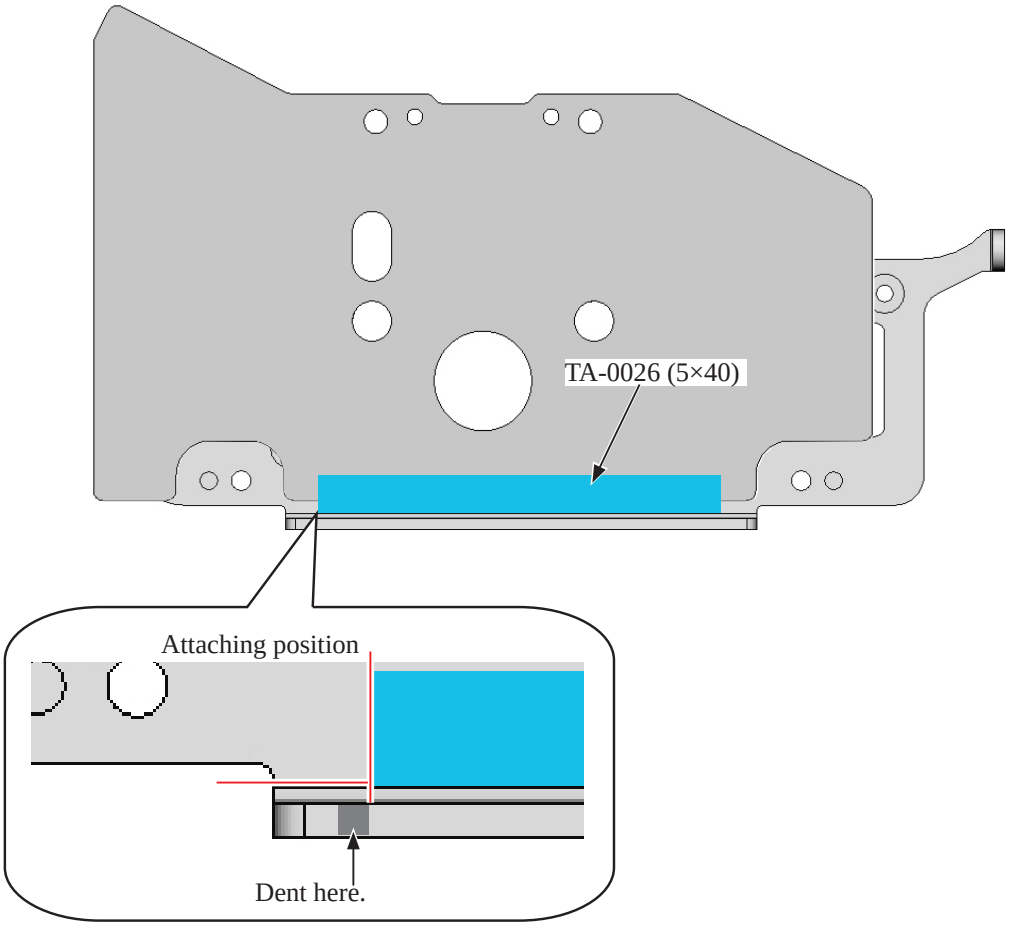

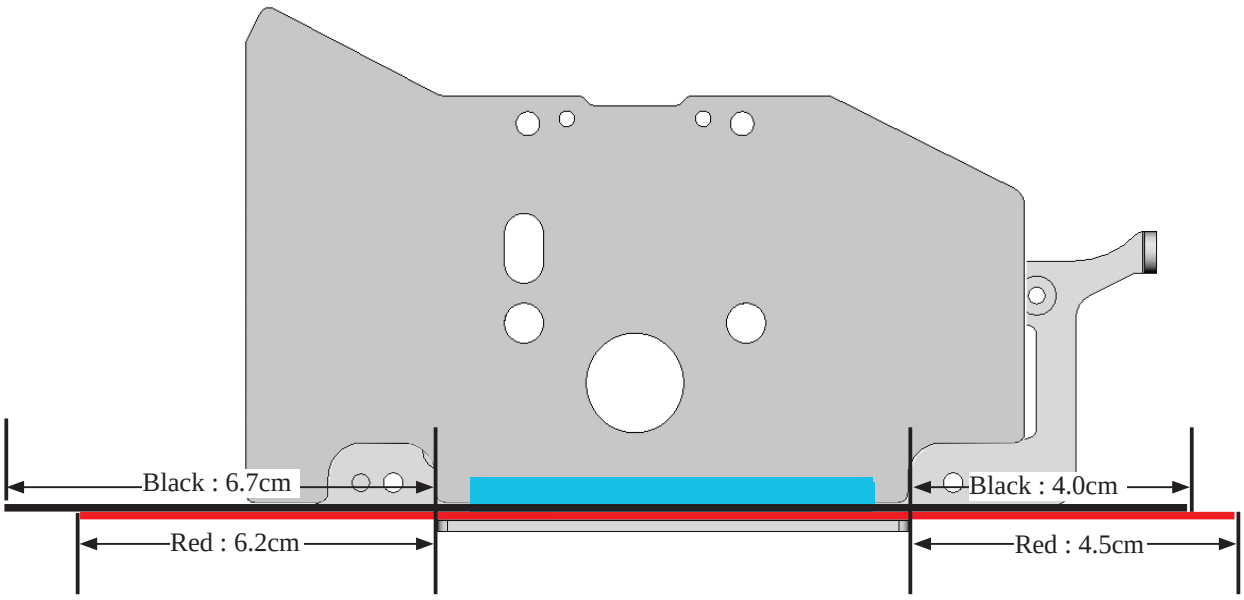

User ID:INC

- Mount the bottom plate unit on the front body, and tighten the two screws (#647) in the numeric order from ① to ② .
- Attach the heat-radiating sheet of the image sensor unit (#B3051) to the bottom plate unit.

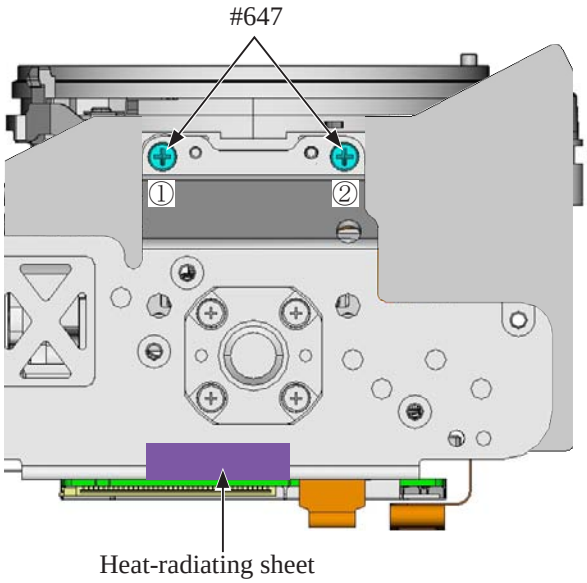

- Attach the shield sheet (#65) to the front body unit as below.

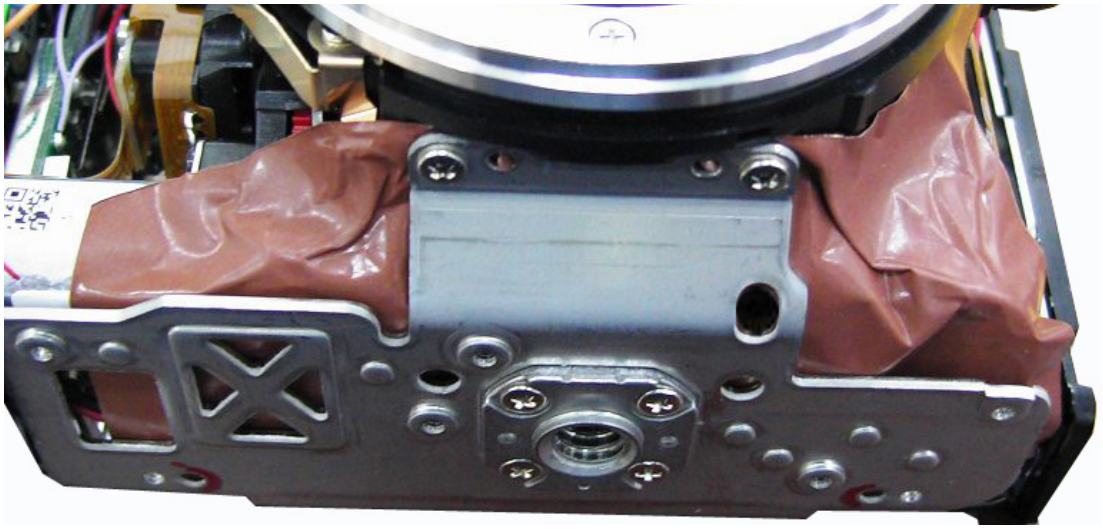

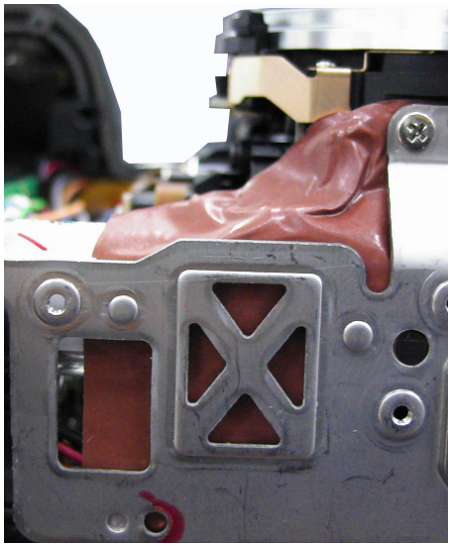

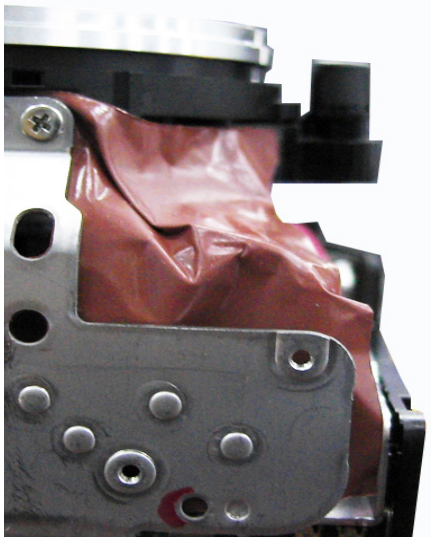

User ID:INC

Radiating sheet for repair

- If the heat-radiating sheet is peeled off, attach the radiating sheet for repair (#57) as below.

1st time

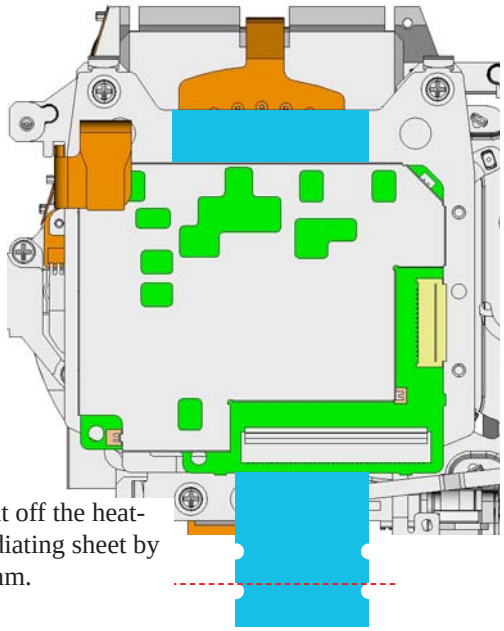

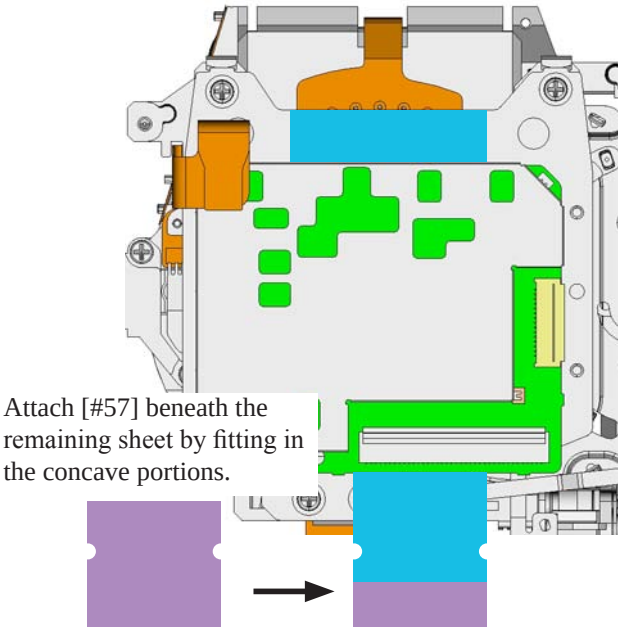

2nd time and later

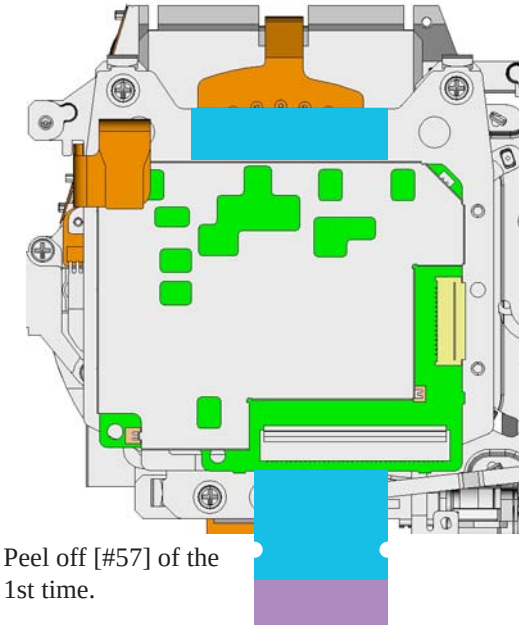

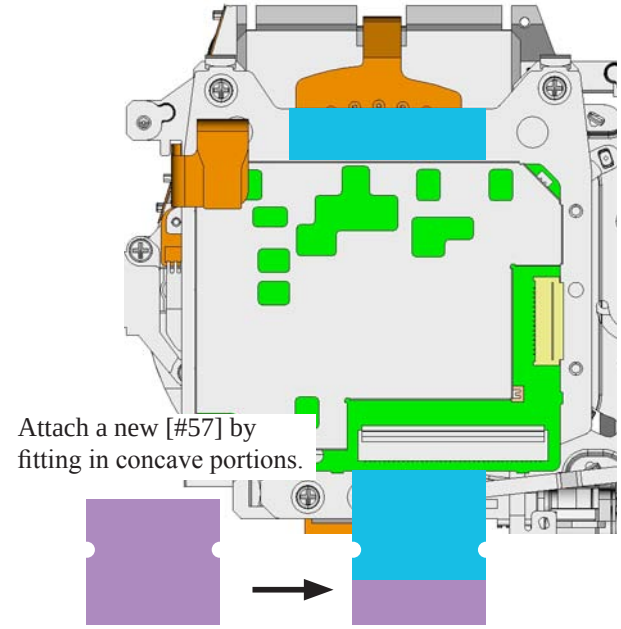

User ID:INC

Sub-frame

- Attach the two rubbers (#63) to the sub-frame (#62).
- Attach the tape [TA-0016 (5×8)].

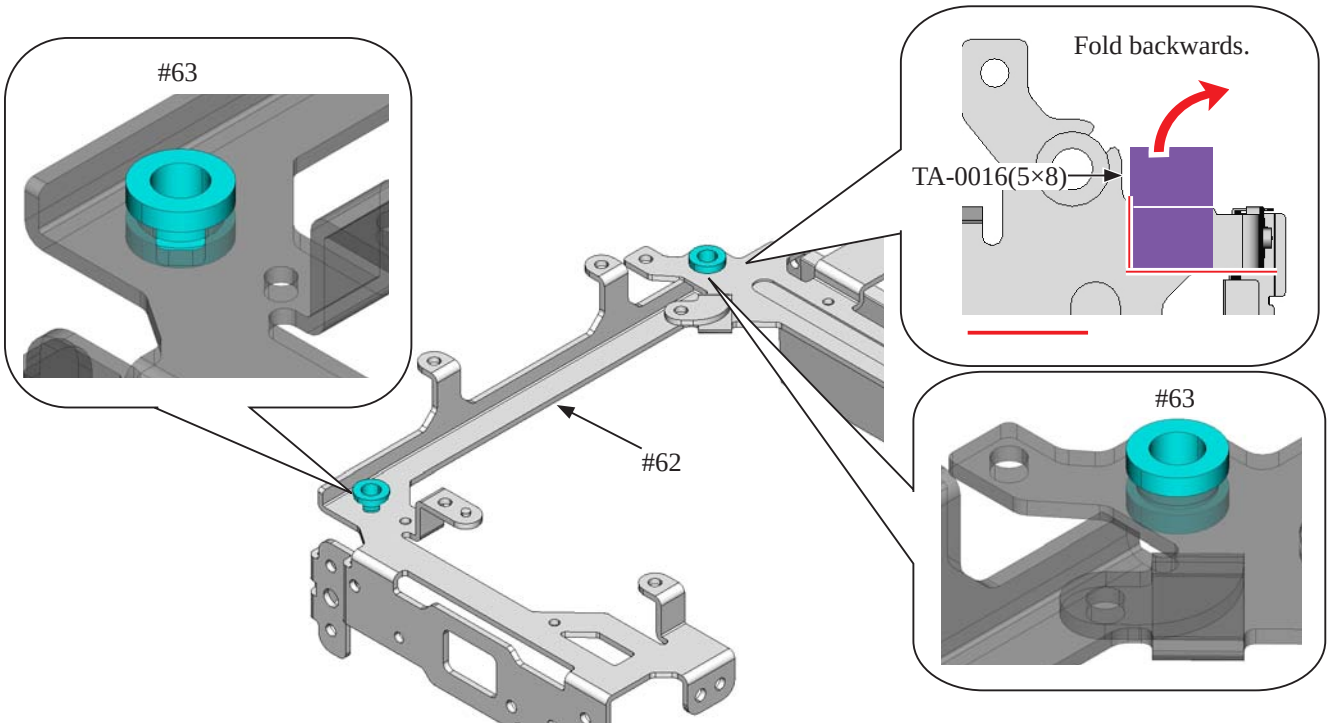

- Mount the eyelet (#145), and tighten the two screws (#657).
- Mount the "O"-ring (#147).

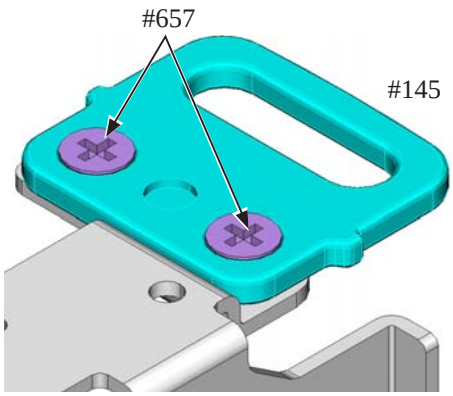

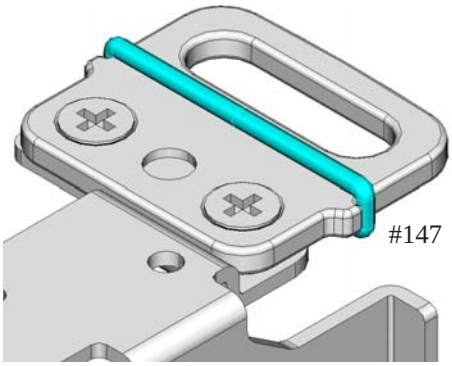

User ID:INC

SZ-DC/DC PCB unit

- Solder the four wires.
- Mount the SZ-DC/DC PCB unit (#B1002) on the sub-frame (#62).
- Tighten the two screws (#656).

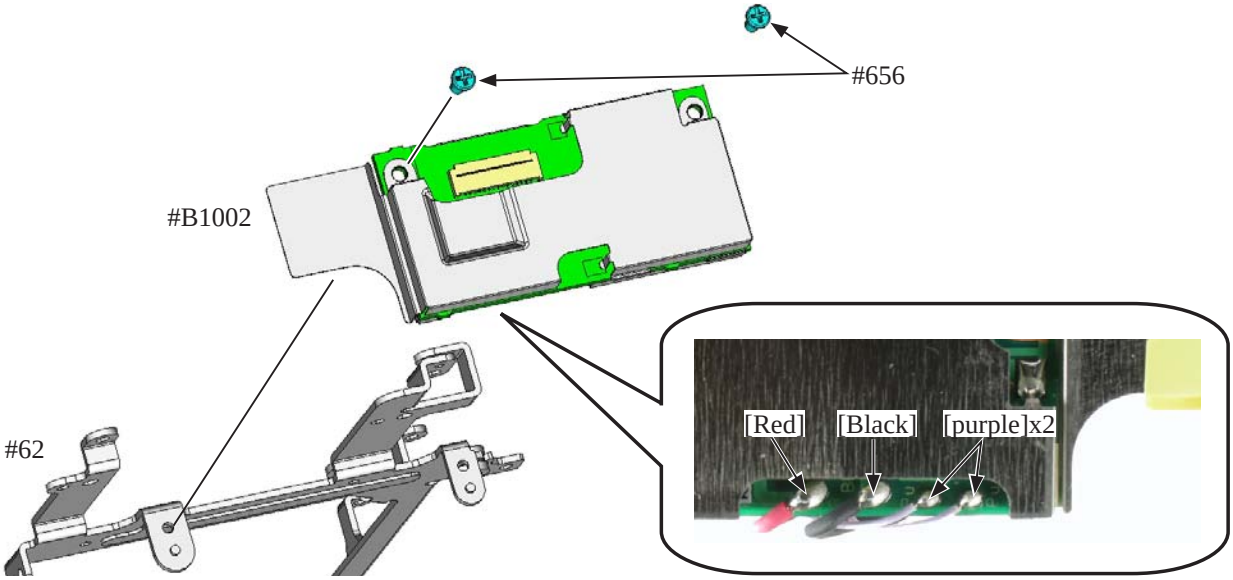

User ID:INC

Sub-frame unit

- Connect the connection-FPC (#1020) to the sub-frame unit.
- Mount the sub-frame unit on the front body unit.
- Tighten the two screws (#635) with the torque driver (set value: 12N.cm) in the numeric order from ① to ② .
- Tighten the two screws (#656) in the numeric order from ① to ② , and connect the FPC (#1020) to the image sensor unit (#B3051).

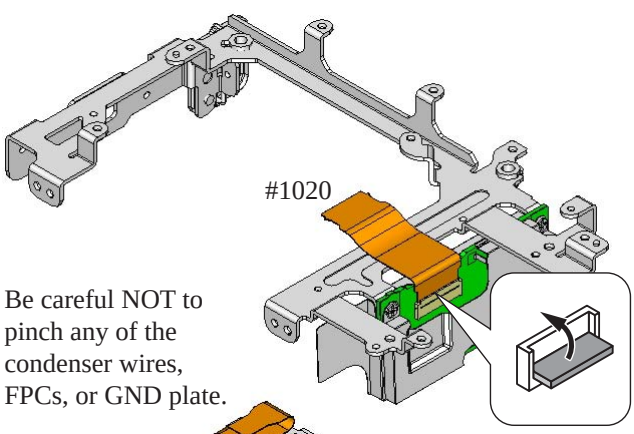

Be careful NOT to pinch any of the condenser wires, FPCs, or GND plate.

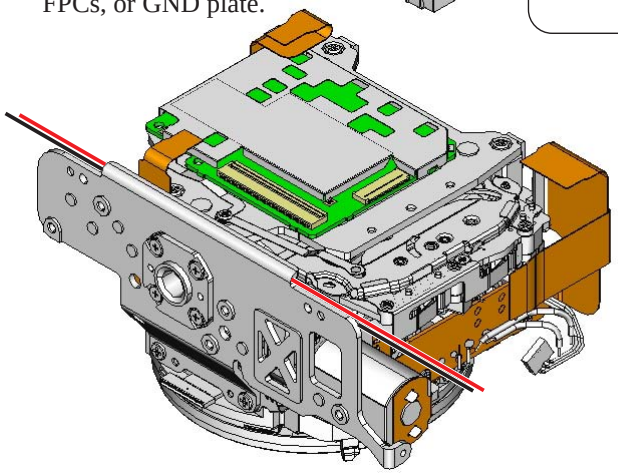

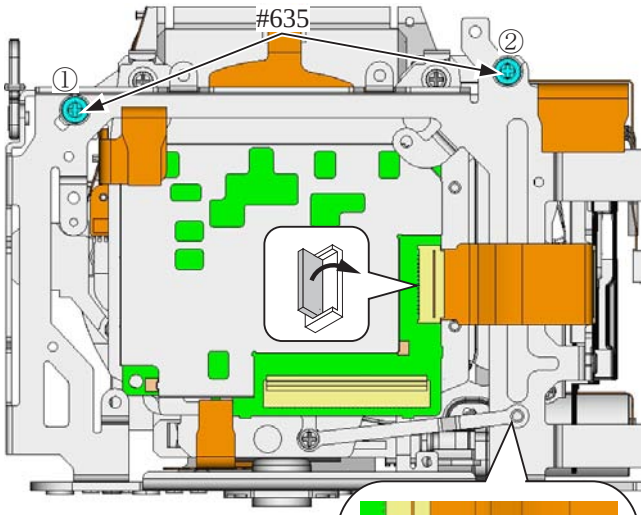

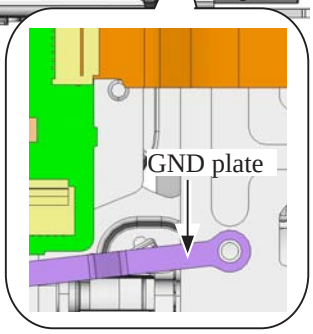

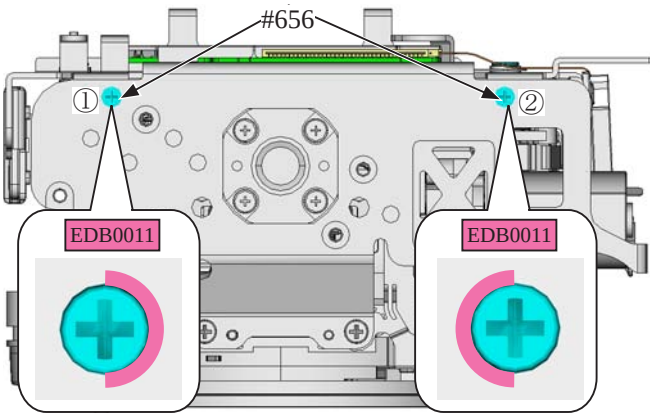

- Attach the tape (#481) to the shield plate (#480).

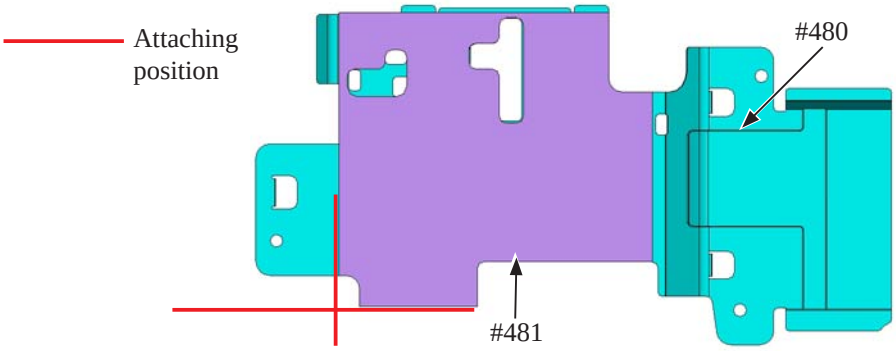

User ID:INC

• Mount the shield plate unit so that the GND plate of the image sensor unit is not pinched.

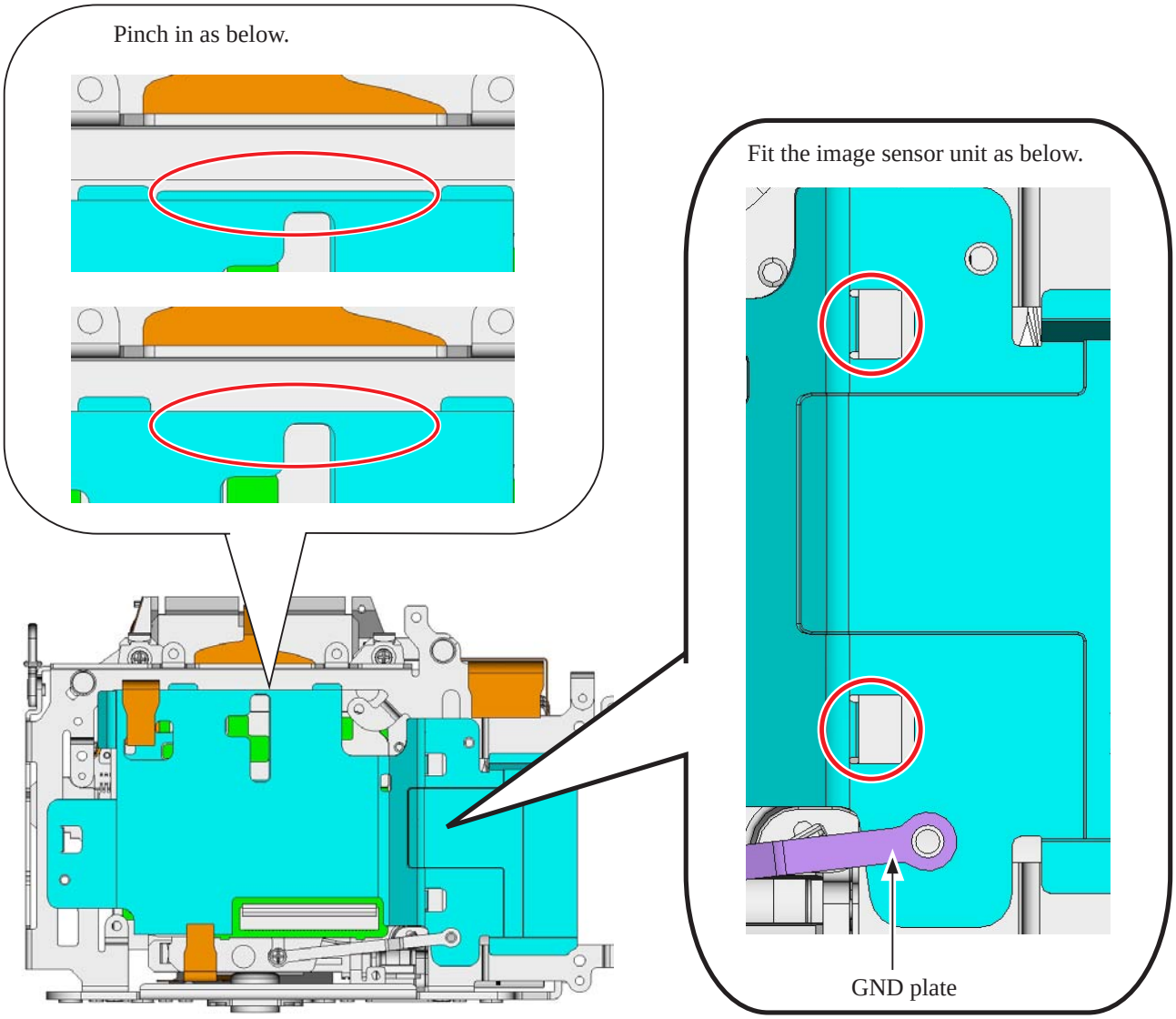

• Tighten the three screws (#607).

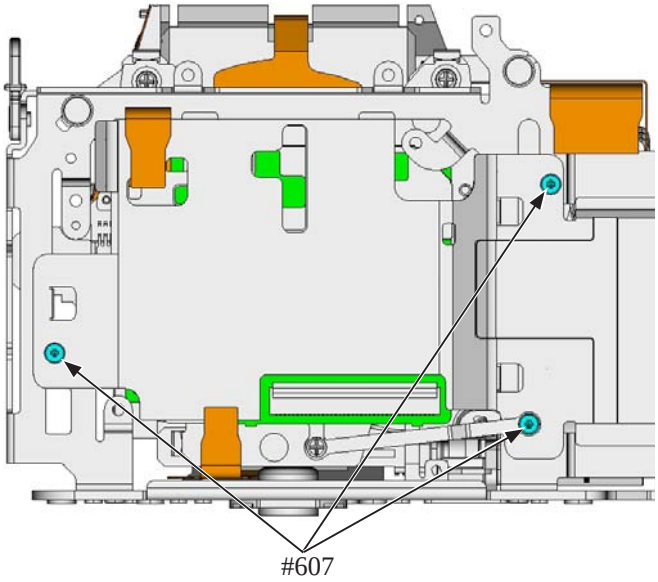

User ID:INC

Battery box unit

- Put the pin (#155) into the battery box (#156), and apply the adhesive (EDC0021).

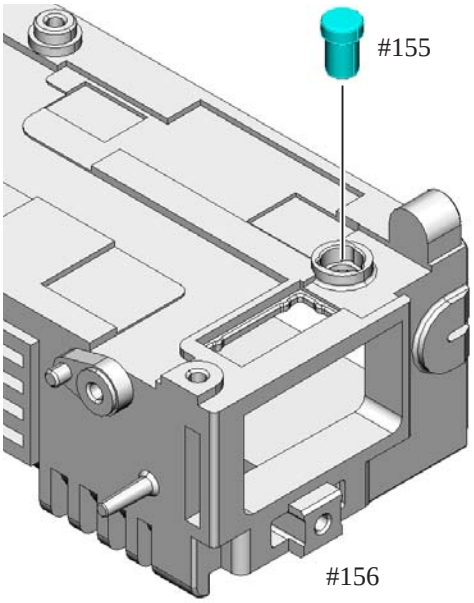

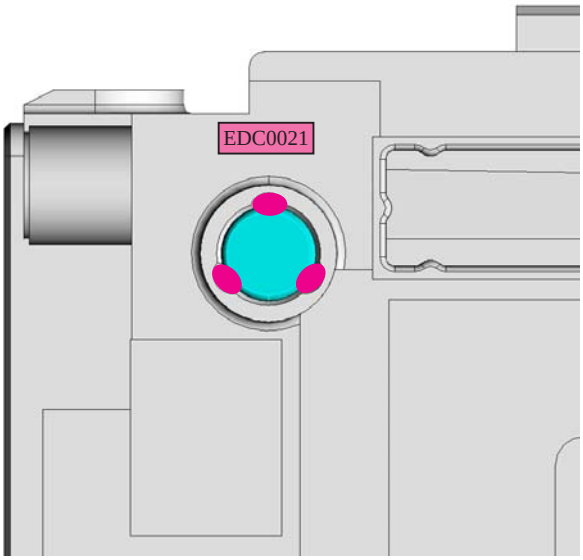

- Attach the sheet (#154).

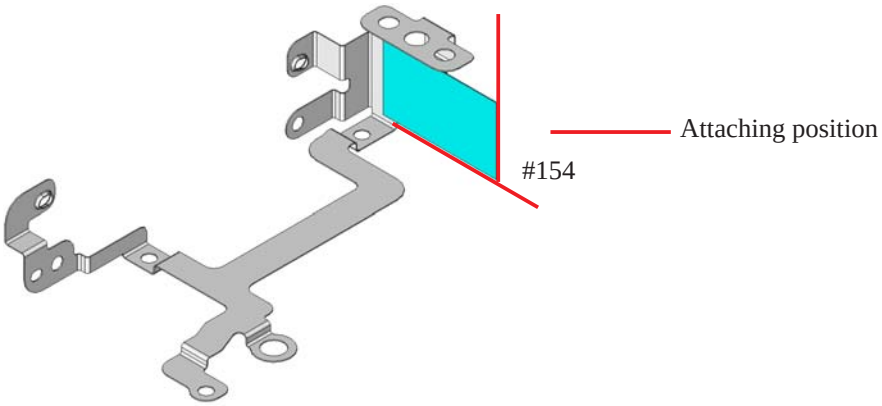

- Mount the GND plate (#159).

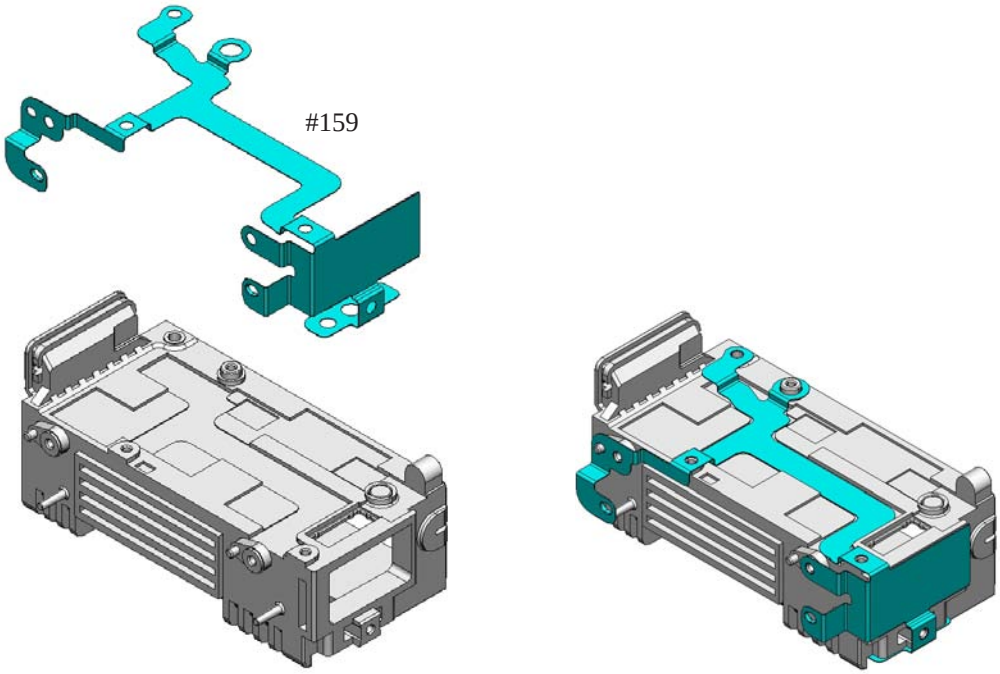

User ID:INC

- Attach the sheet (#150).

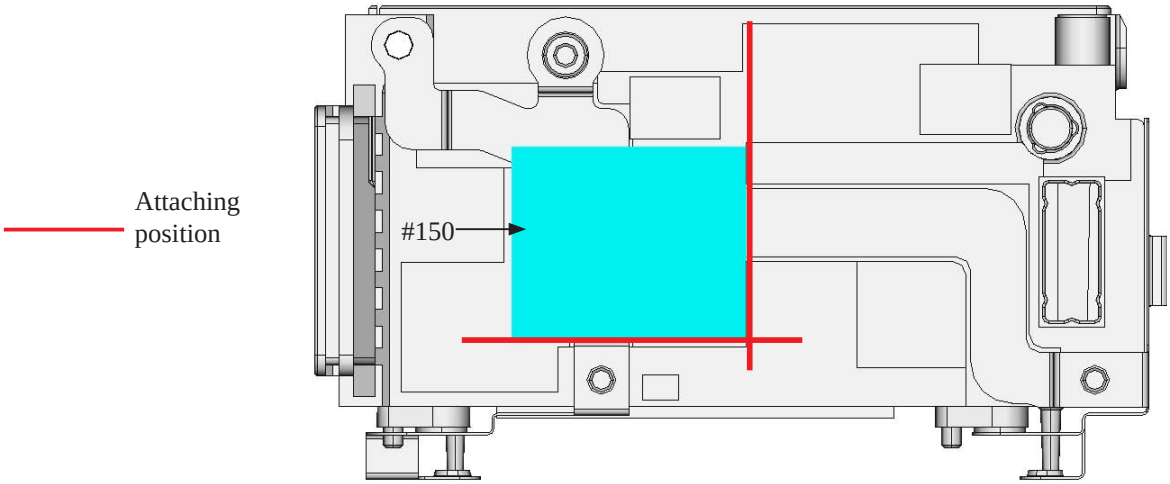

- Mount the eyelet (#145), and tighten the two screws (#651).
- Mount the "O"-ring (#147).

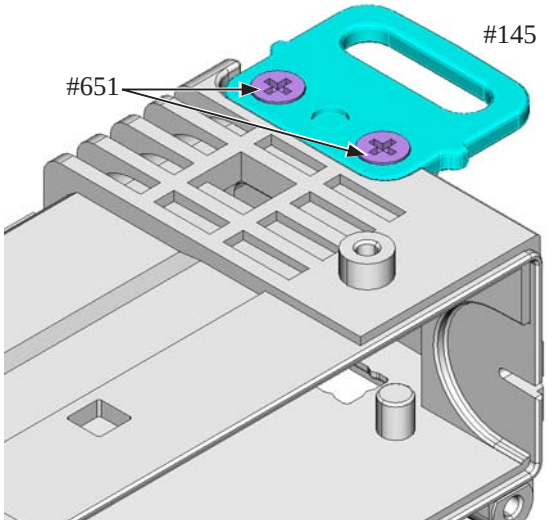

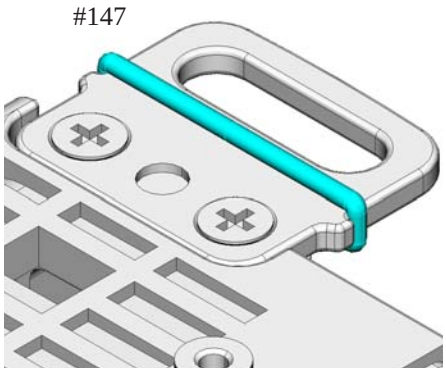

User ID:INC

- Mount the power drive PCB (#1004).
- Tighten the two screws (#658) and one screw (#664).

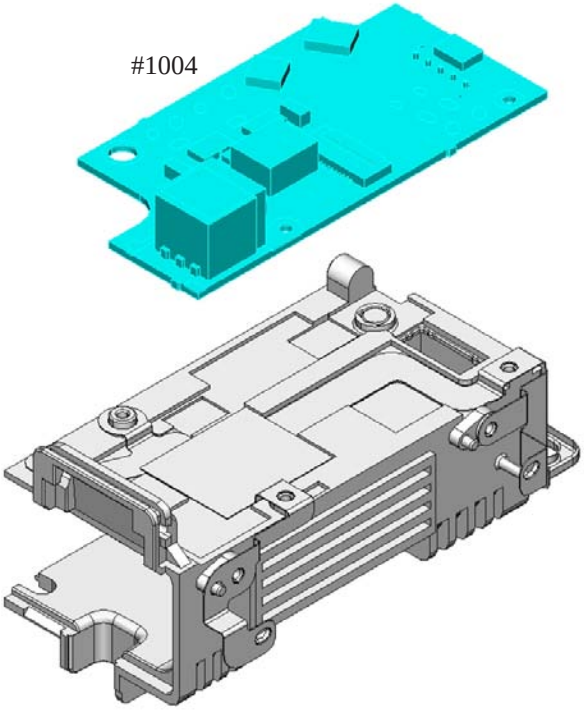

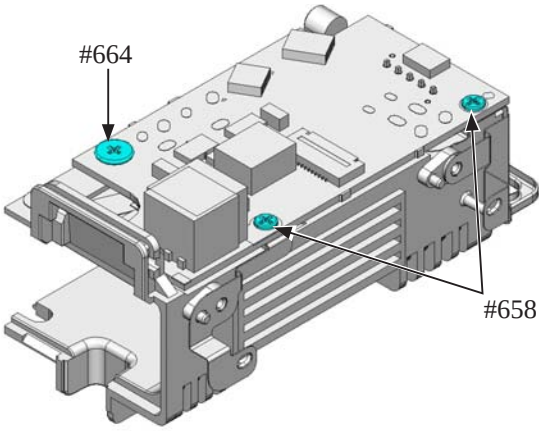

- Solder the two wires of the condenser.

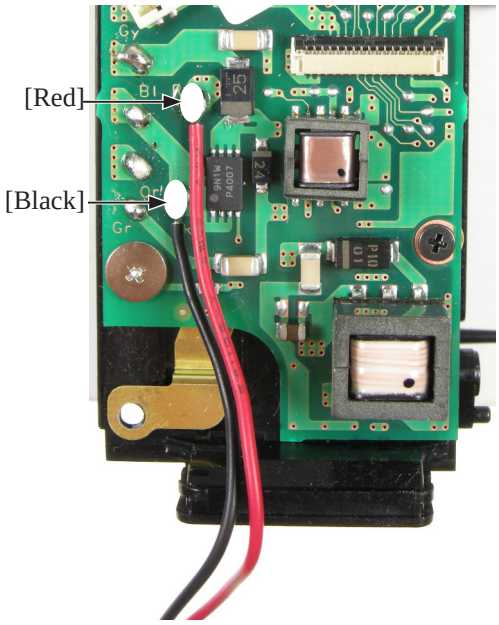

- Solder the two wires of the harness (#1026).

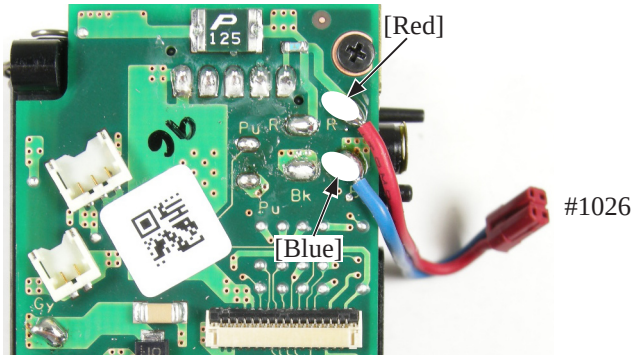

User ID:INC

- Connect the harness with the battery box being tilted.
- Solder the four wires of the power drive PCB.
- Connect the FPC.

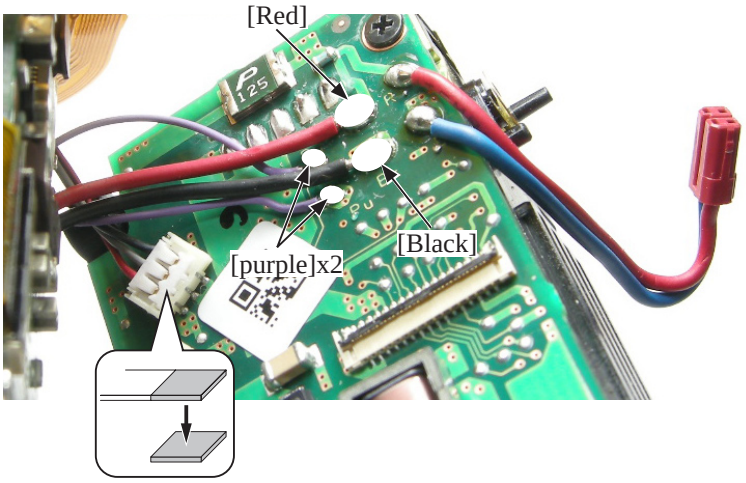

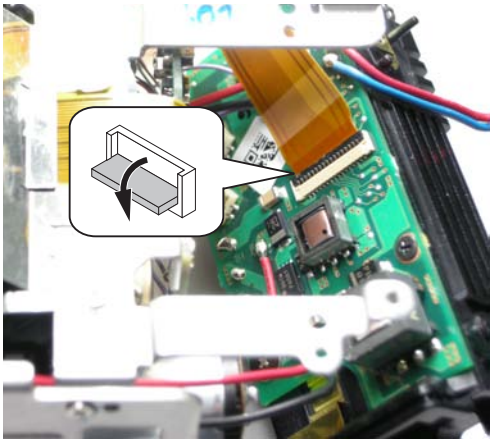

- While placing the condenser wires between the body and battery box, mount the battery box unit.
- Tighten the two screws (#643) and one screw (#638).

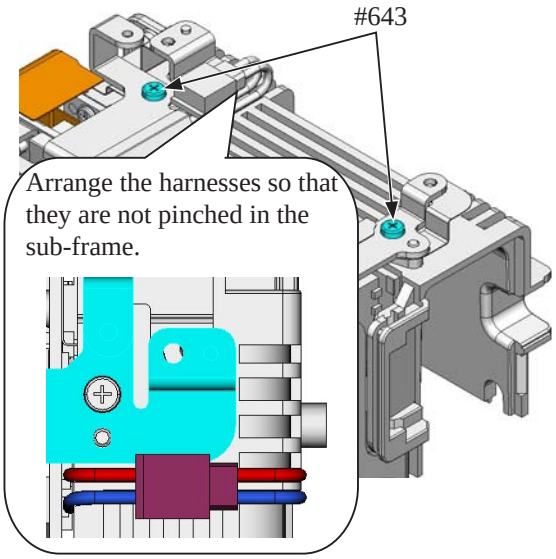

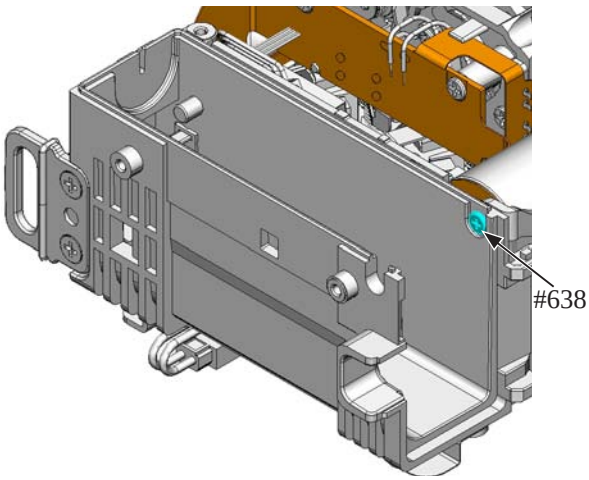

- Attach the spring (#158).

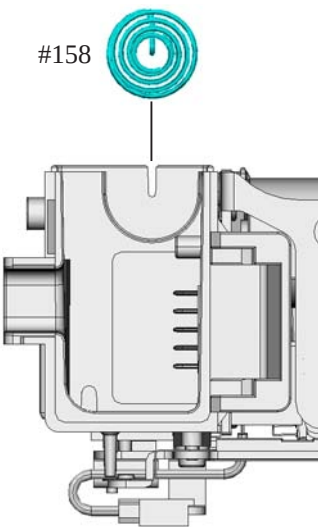

User ID:INC

TOGO PCB unit

- Connect the connection-FPC (#1015) in the numeric order from ① to ② , and mount the TOGO PCB unit (#B2001).

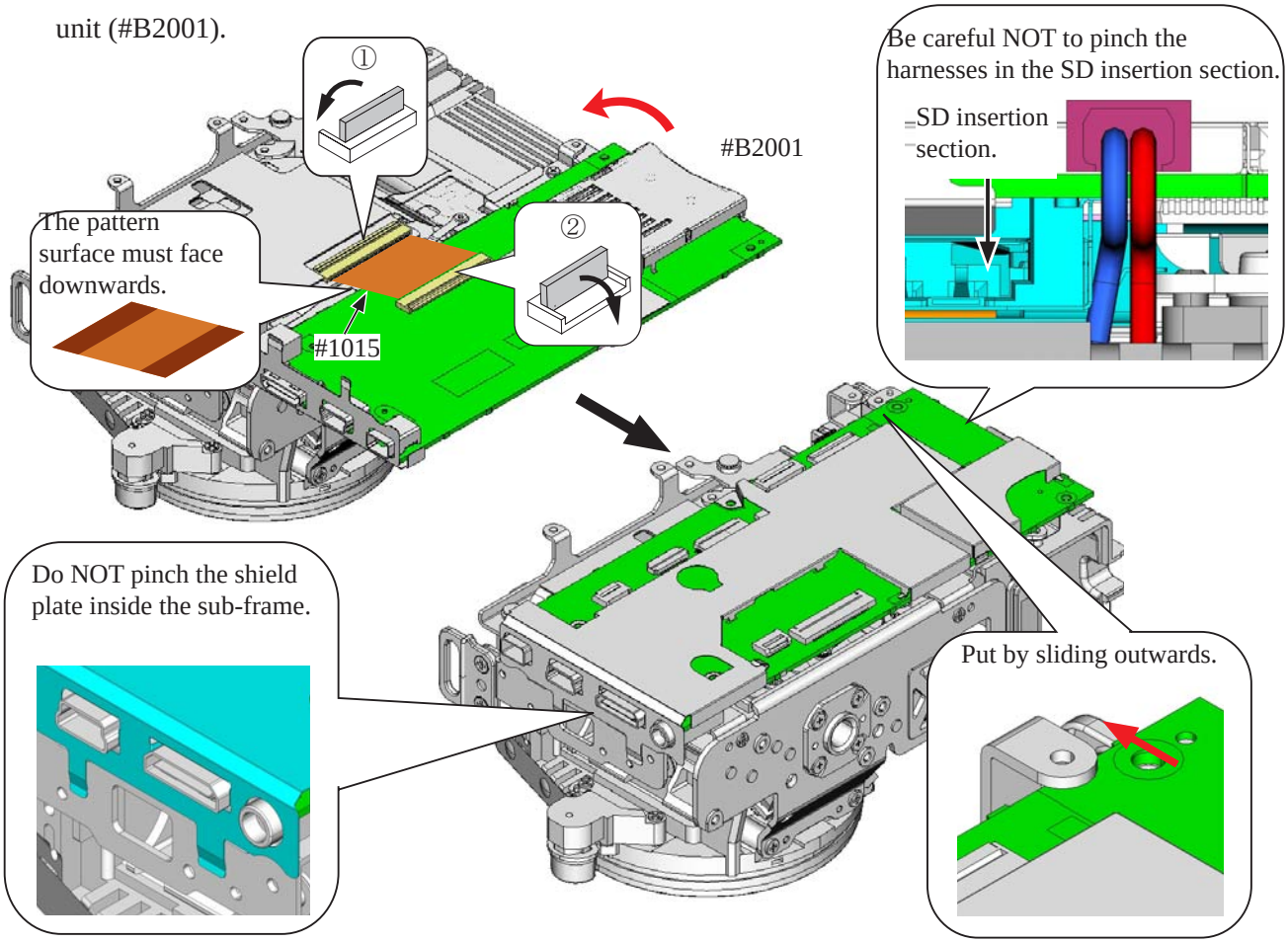

- Tighten the four screws (#656) and one screw (#607).
- Connect the three FPCs.
- Attach the tape [TA-0015 (13×18)].

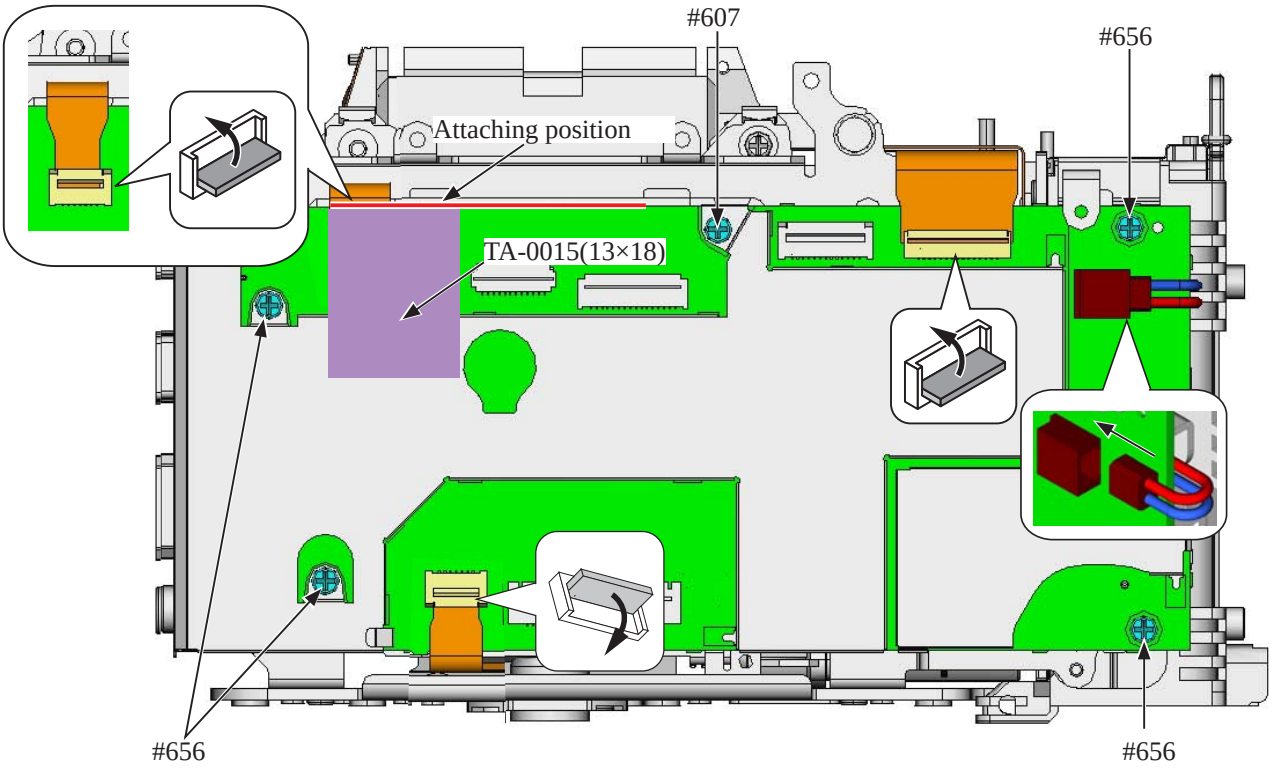

User ID:INC

G7 lens unit

- Mount the G7 lens unit.
- Insert the pin (#262).

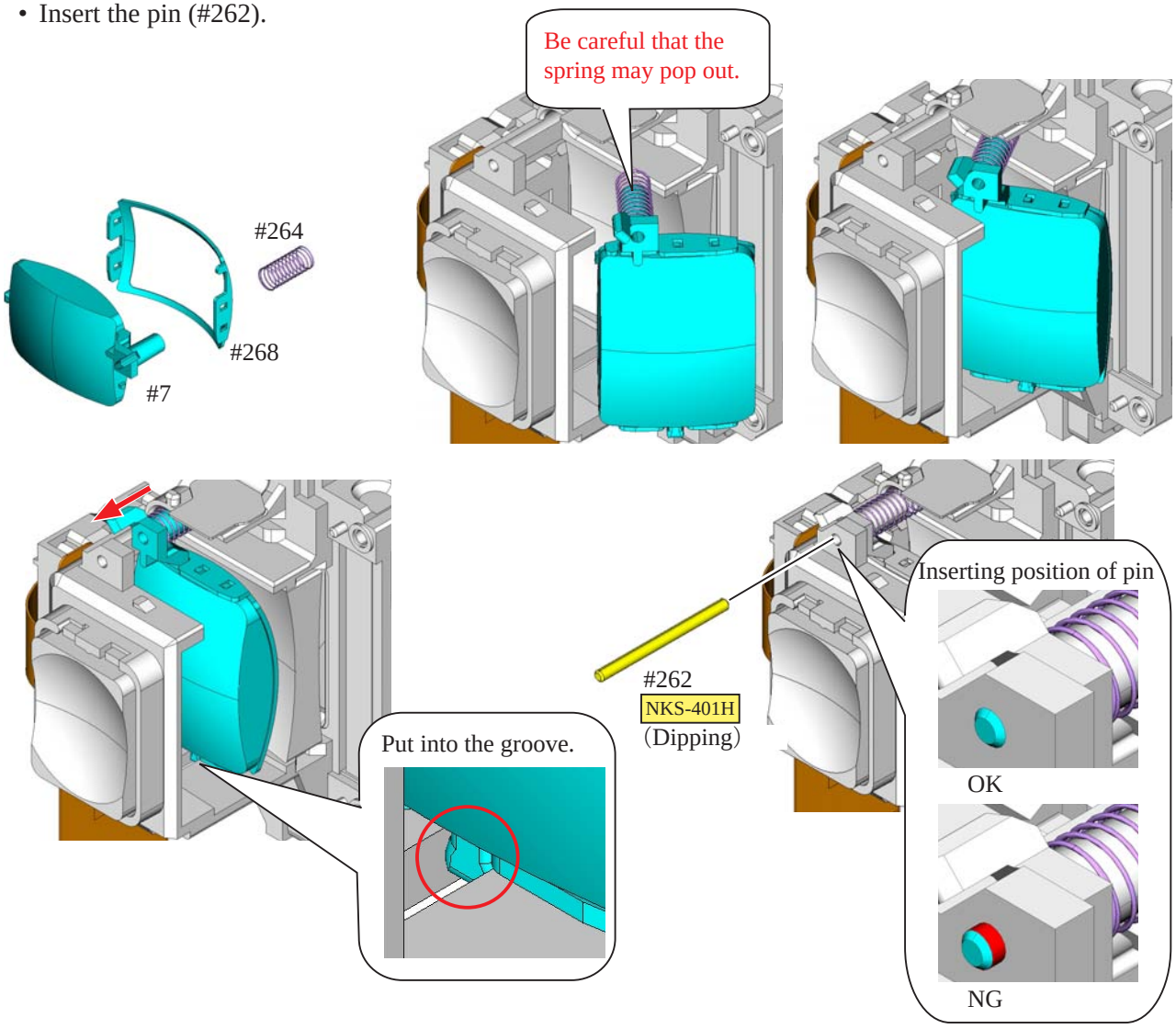

- Mount the shading plate (#271) and sponge (#293).

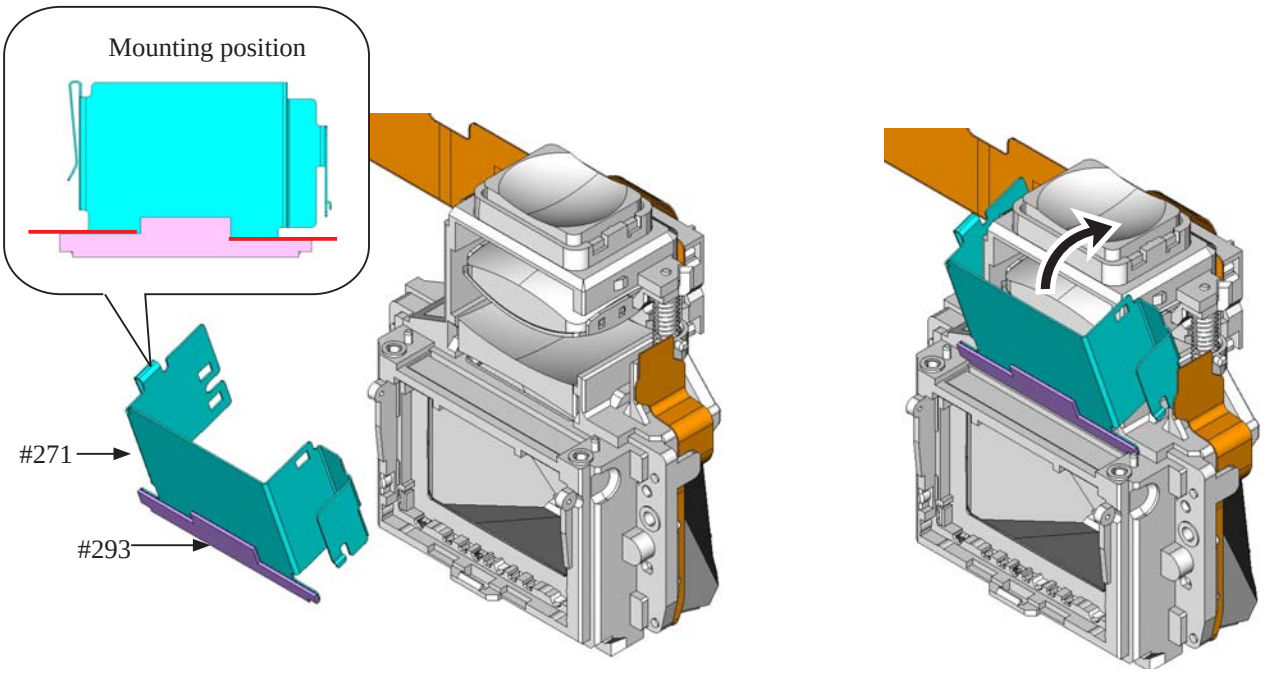

User ID:INC

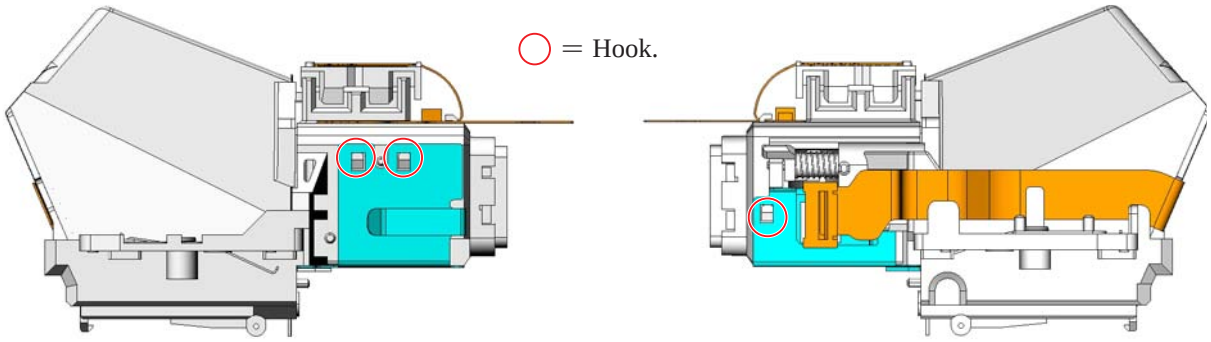

- Attach the double-stick tape [TA-0026 (4.5×4.5)].
- Attach the FPC of the AE-CCD to the shading plate (#271).

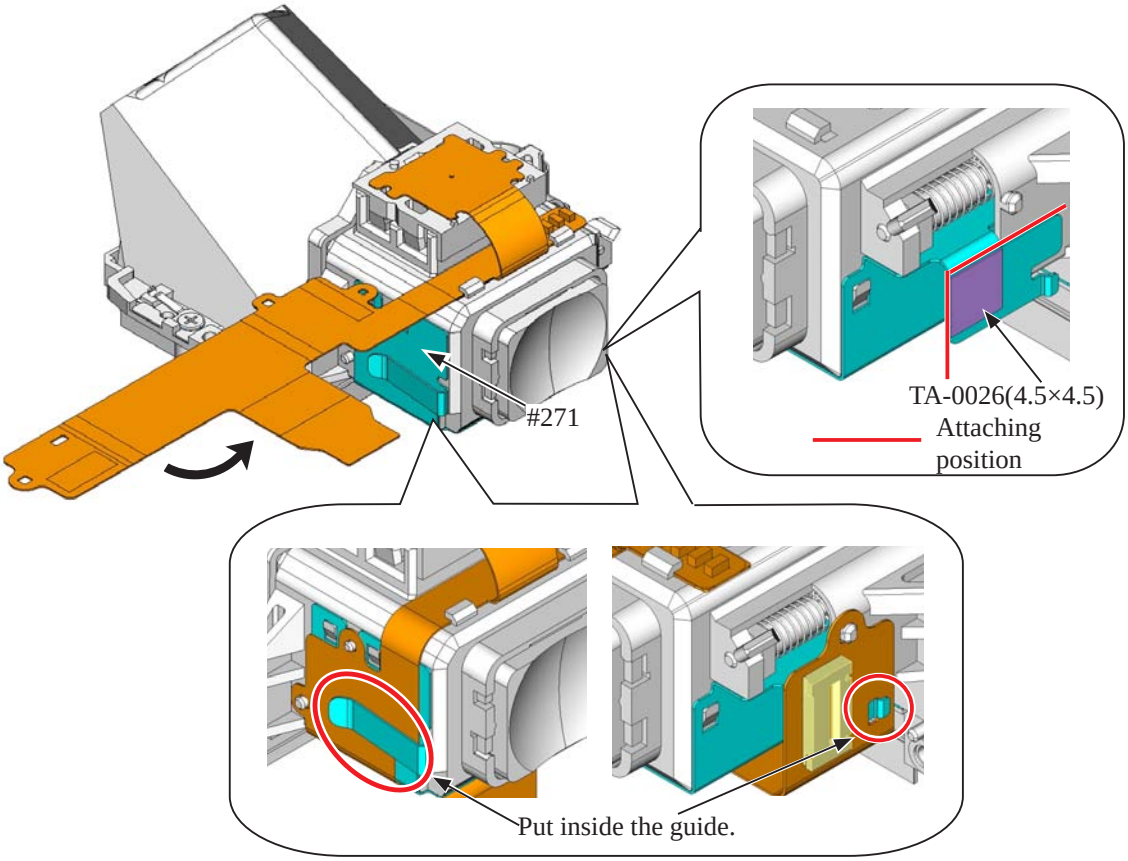

- Connect the FPC.

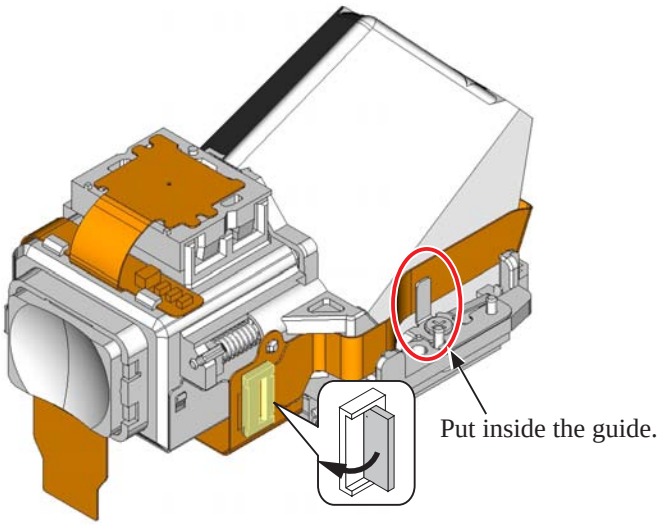

User ID:INC

LCD unit

- Mount the LCD unit (#B1045).
- Tighten the two screws (#650).
- Attach the tape (#291).

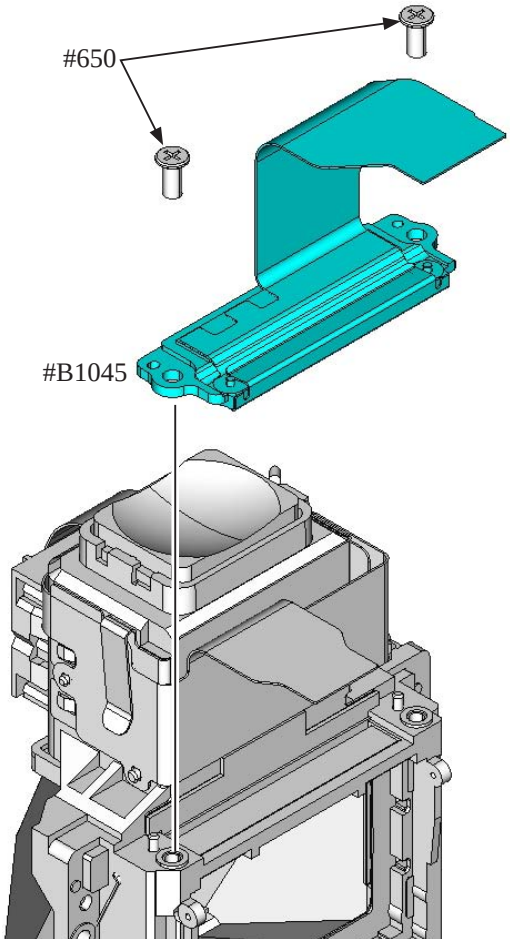

Attaching position of [#291]

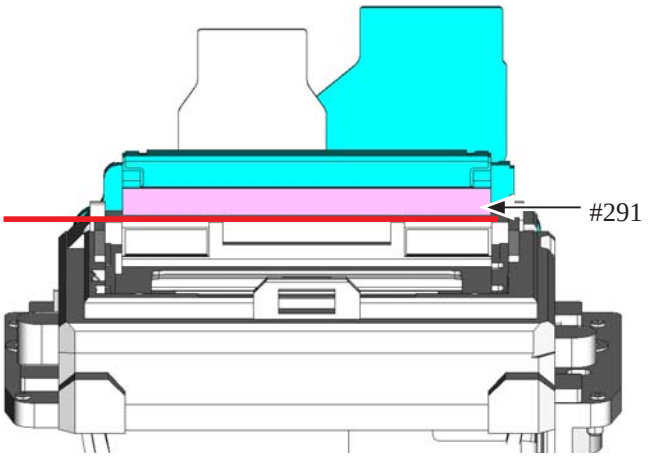

User ID:INC

SI (super impose) display plate

- Mount the SI display plate (#13A).
- Attach the rubbers (#281 and #285).

Caution: The SI display plate (#13A) tends to be scratched easily, so do NOT wipe it out with alcohol. If dust or dirt is attached, blow it with a blower.

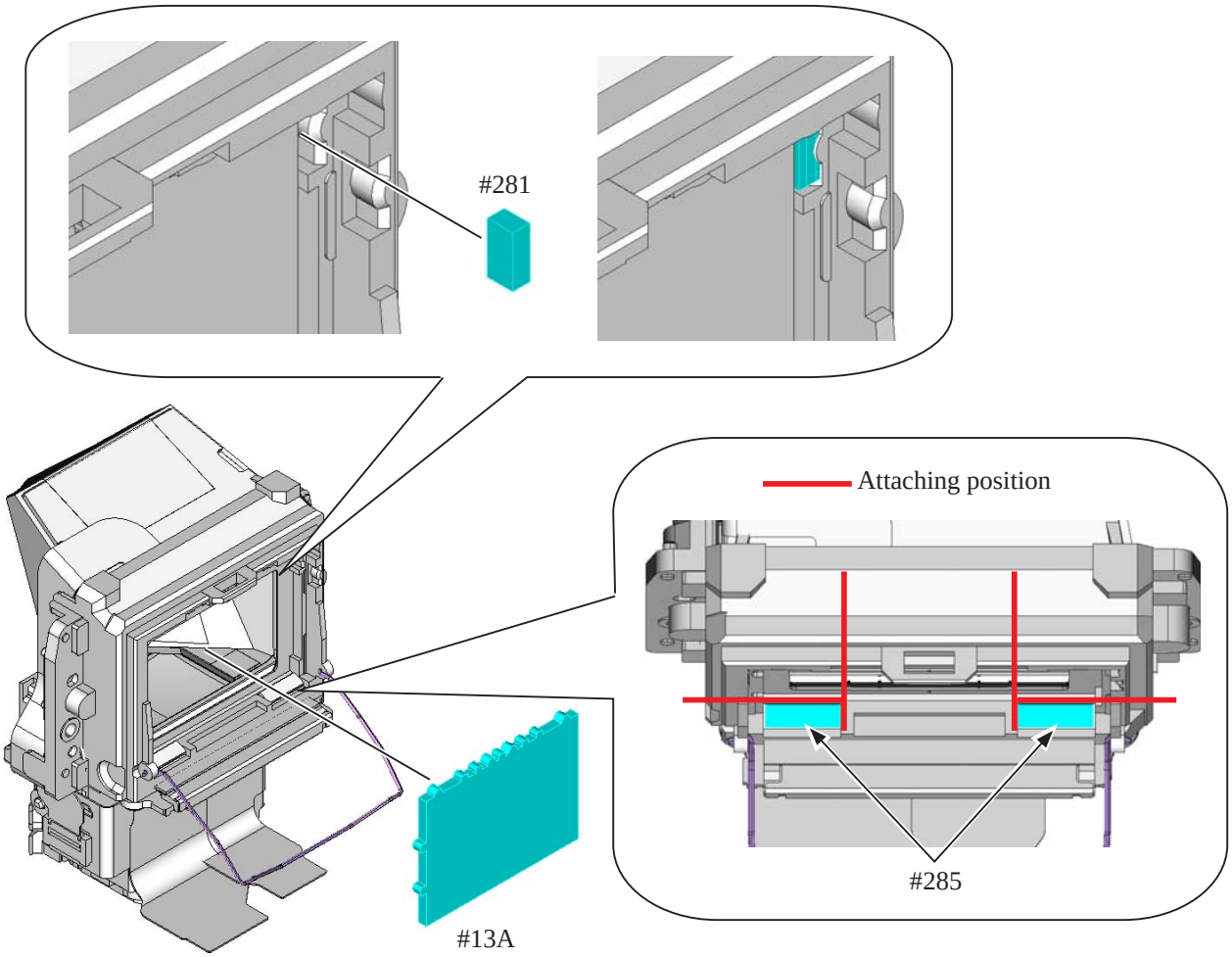

Screen

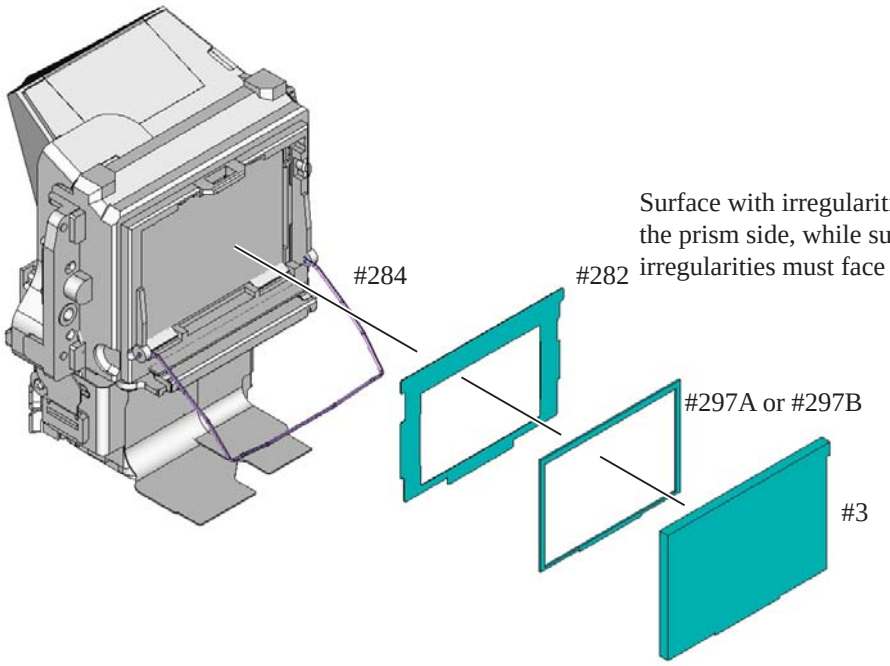

Surface with irregularities must face the prism side, while surface without irregularities must face front body.

User ID:INC

Prism box unit

- Mount the prism box unit.
- Tighten the two screws (#613).

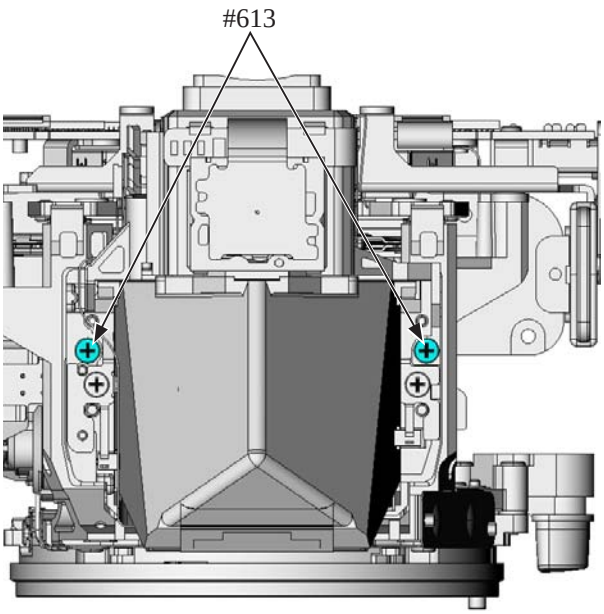

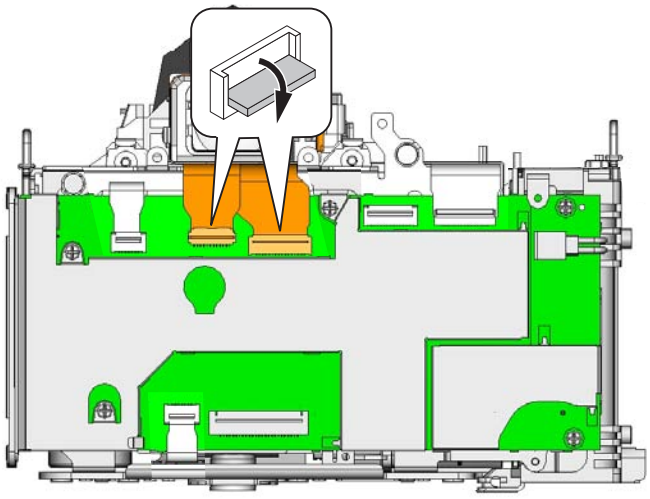

Angle adjustment of main mirror and sub-mirror

- Refer to "Angle adjustment of main mirror and sub-mirror" and "How to do positioning of sub-mirror for 51° angle" of ADJUSTMENT Separate Volume ① for details.

  Standard angle of sub-mirror: 51°

	Main	Sub (51°)
Up-down deviation	**0±4′**	**0±3′**
Left-right deviation	**0±10′**	

※ Height indication position of the measurement-use sub-mirror

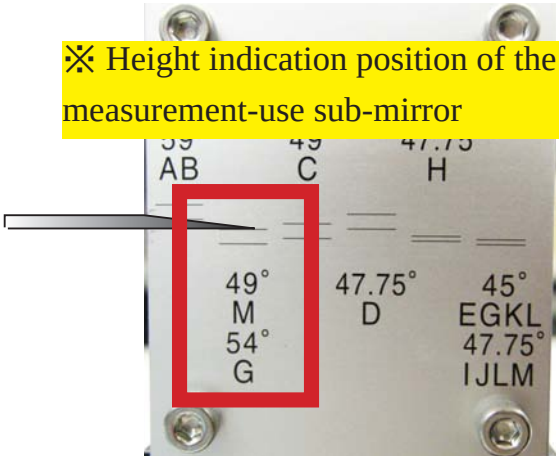

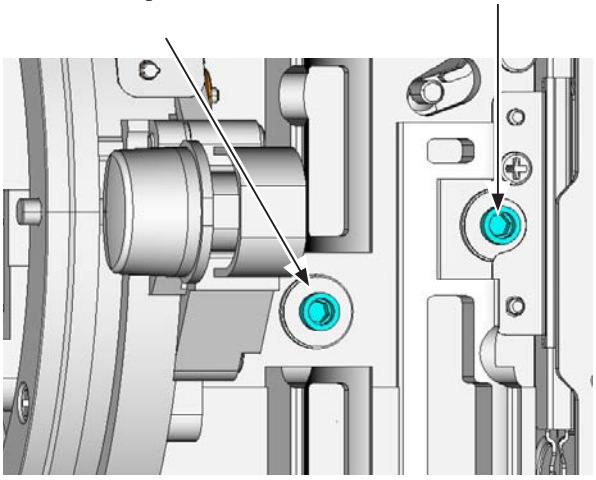

Tool (Device)		
J19132	J19132D	J15442
		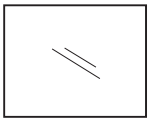
Main/Sub mirror angle inspection tool	54°-measurement-use mirror	Reflection mirror

User ID:INC

Inspection and adjustment of "∞ (infinity)" focus

- Refer to "Inspection and adjustment of "∞ (infinity)" focus" of ADJUSTMENT Separate Volume ① for details.

  Standard: Range fm -0.06 to +0.06mm

  -0.06 or smaller: Increase the washers (to increase thickness)

  +0.06 or larger: Decrease the washers (to reduce thickness)

297A	1K603-712	washer T=0.10
297B	1K603-713	washer T=0.20

Tool (Device)		
J19001 ∞ focus collimator F = 600mm	J18010 Infinity standard lens 50/1.8	J15441 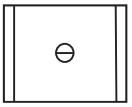 Infinity focus adjustment screen

IF holder

- Mount the IF holder (#70), and tighten the screw (#633).

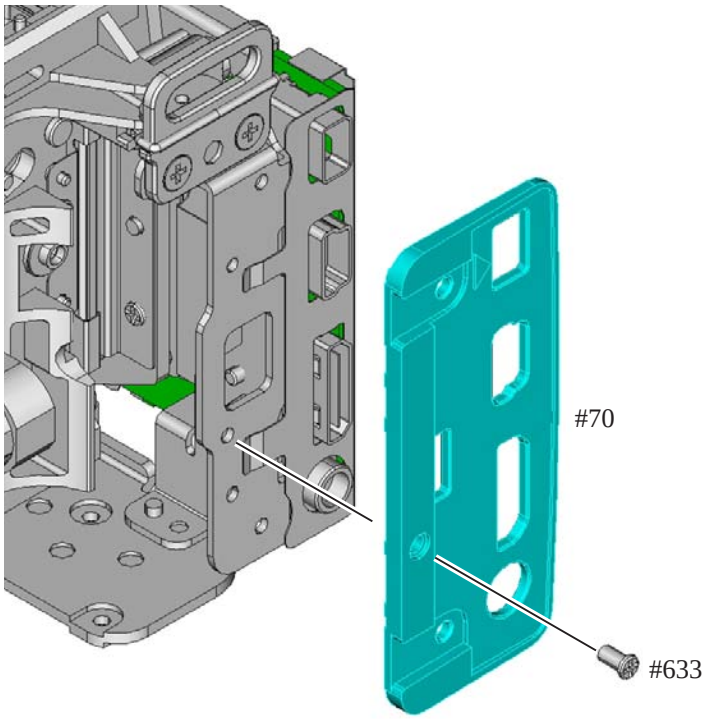

User ID:INC

Main condenser

- Attach the double-stick tape (#141) to the main condenser (#1043).
- Mount the main condenser unit based on the mounting position of the front body so that the end of the attached double-stick comes to the mounting-position line.
- Solder the two wires on the main condenser unit.
- Attach the tape TA-0015 [TA-0015 (13×28)].

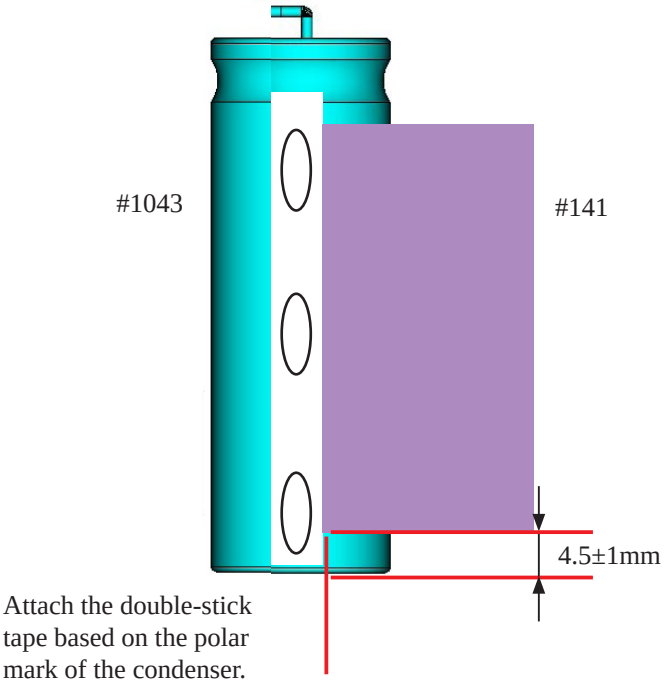

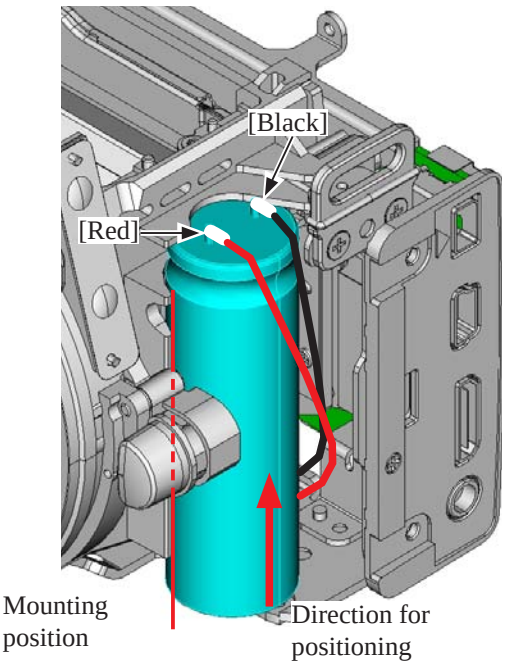

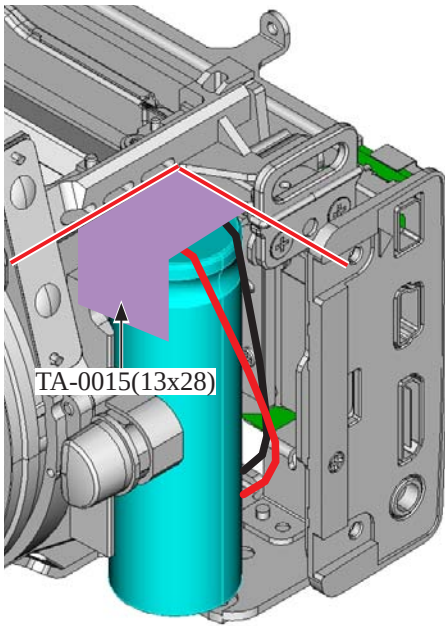

User ID:INC

Inspection for AE-CCD positioning

Note: As for this product, make only the inspection for the AE-CCD positioning.

Caution: If the secondary rechargeable battery of the TOGO PCB has no capacity left, it may be impossible to communicate with the PC. In this case, mount the top cover and rear cover, and then set "time zone" and "date and time" on the menu.

- Mount the front cover (#24), and tighten the three screws (#631) (for temporary assembly).
- Mount the battery cover unit (#B151).
- Refer to "Inspection and adjustment for AE-CCD positioning" of ADJUSTMENT Separate Volume ② for details.

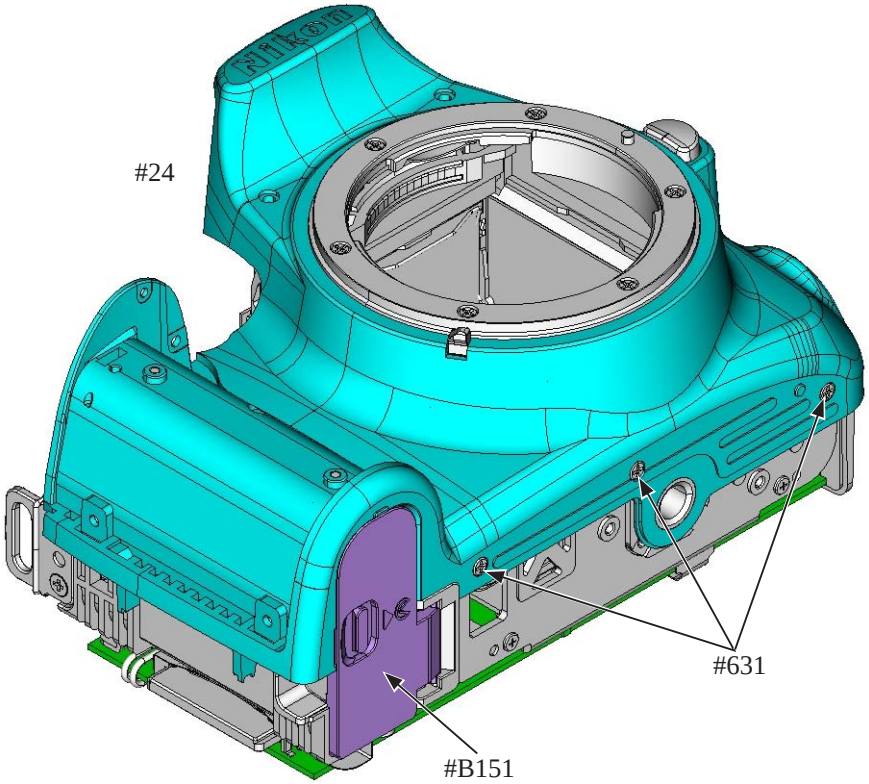

Tool (Device)					
J15428	J63070	J18267	J15443	J15444	Use Nikon products.
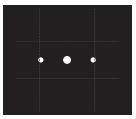					
AE/CCD use chart board	Color viewer	LENS AF50/1.4D	TWO-WAY level	TWO-WAY focusing rail	Power connector EP-5A

User ID:INC

⚠ WARNING

- There are high voltage parts inside. Be careful of this electric shock, when you remove the cover.
- You must discharge the main condenser according to the instruction of this repair manual after you remove the cover.

- Remove the battery cover unit (#B151).
- Take out the three screws (#631), and remove the front cover (#24).
- Discharge the main condenser.

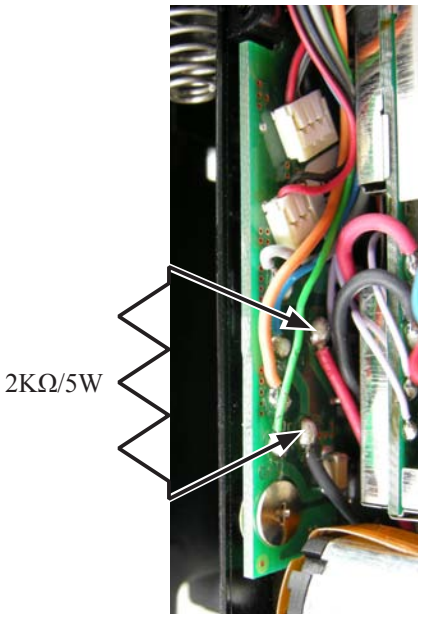

User ID:INC

3. Top Cover

Hot shoe

- Attach the holder plate (#322), hot shoe spring (#318), hot shoe (#316), and hot shoe mold unit (#B317).
- Tighten the four screws (#654).

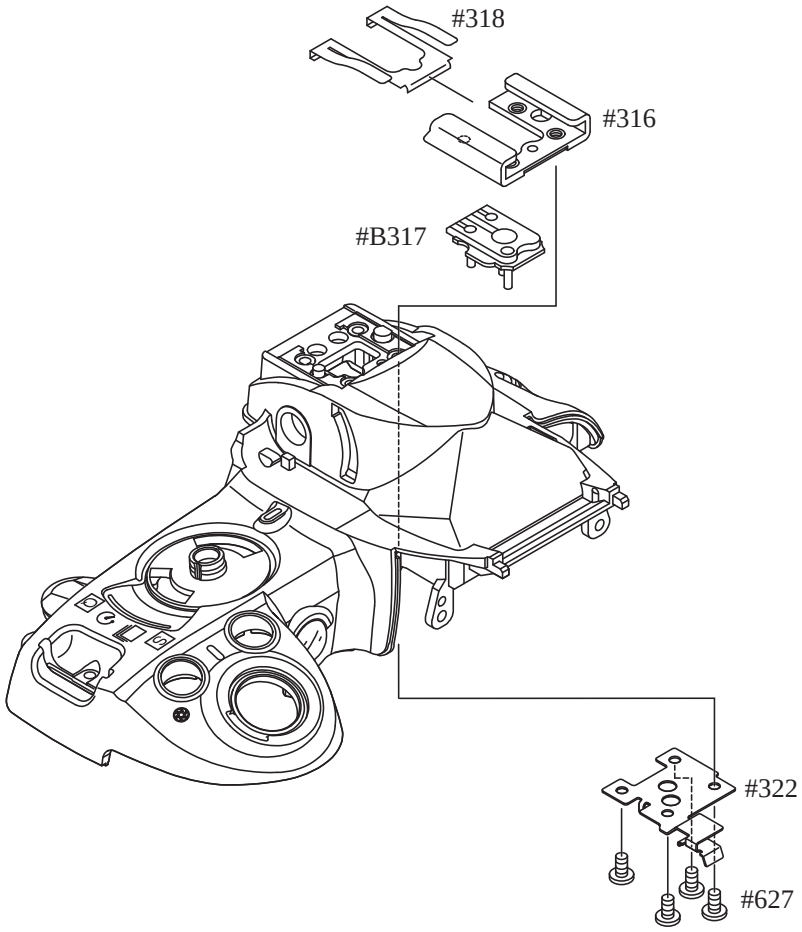

Mode dial unit

- Mount the release mode dial (#374).

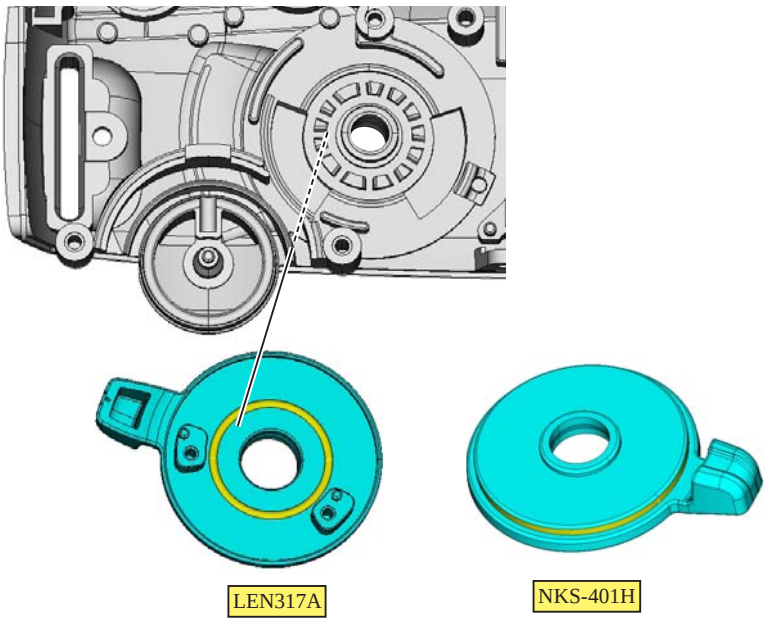

User ID:INC

- Attach the click ball (#362) and contact brush (#375).
- Tighten the two screws (#663).

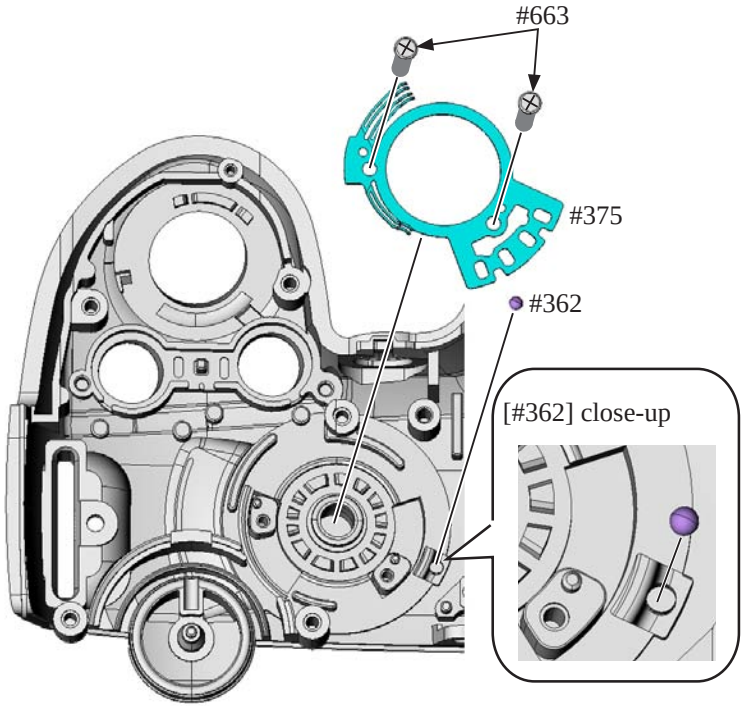

- Mount the mode dial unit (#B371).
- Attach the contact brush (#372) and click spring (#373).
- Tighten the screw (#616).

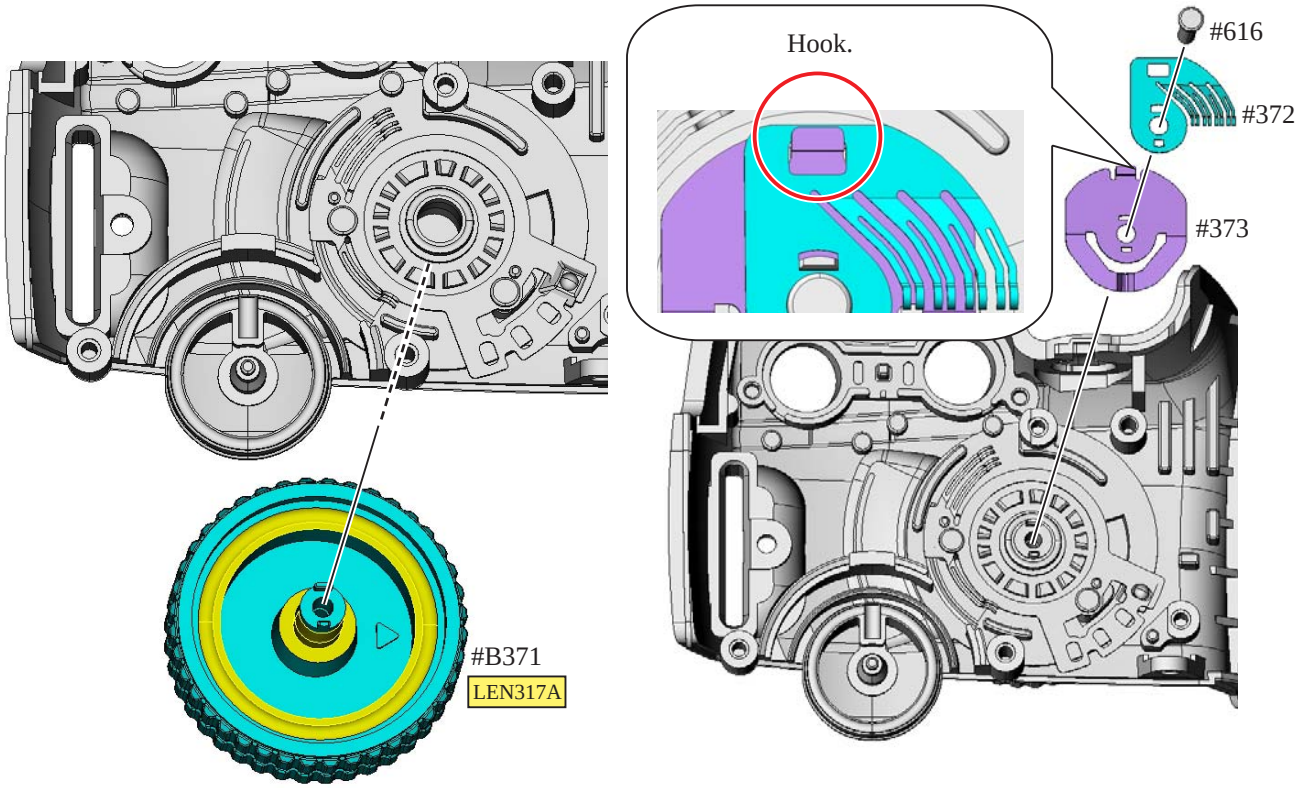

User ID:INC

ON-OFF dial

- Attach the power dial unit (#B345) at ON position, and then attach the ON-OFF click plate (#347) and ON-OFF SW brush (#348).
- Tighten the two screws (#615).

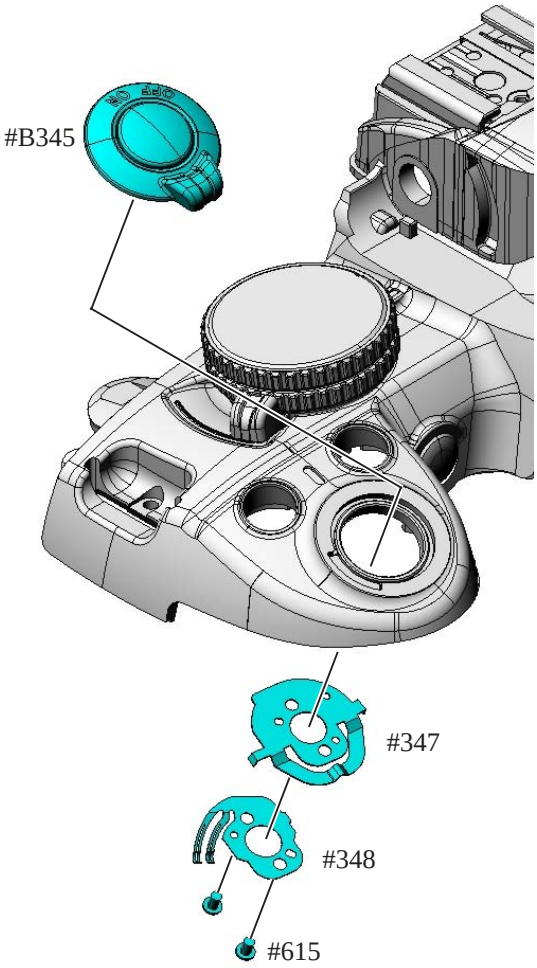

Info & "+ −" aperture button

- Attach the button (#381).

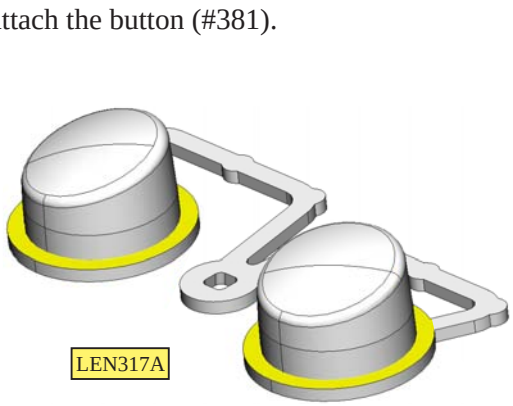

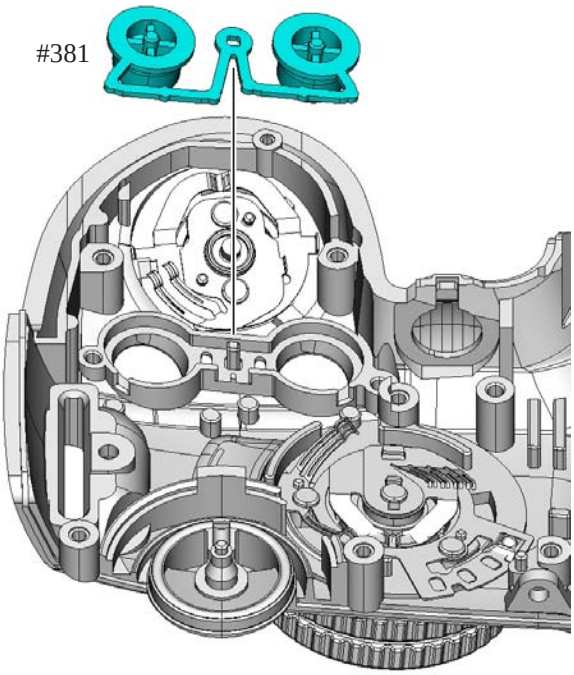

User ID:INC

Command dial unit

- Mount the command dial unit (#B360).

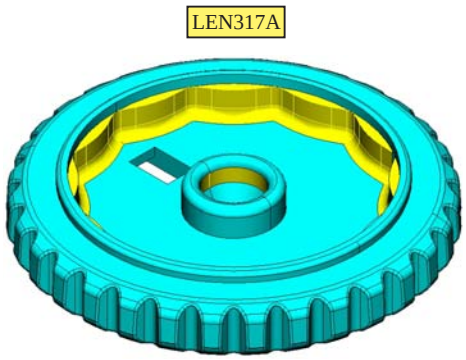

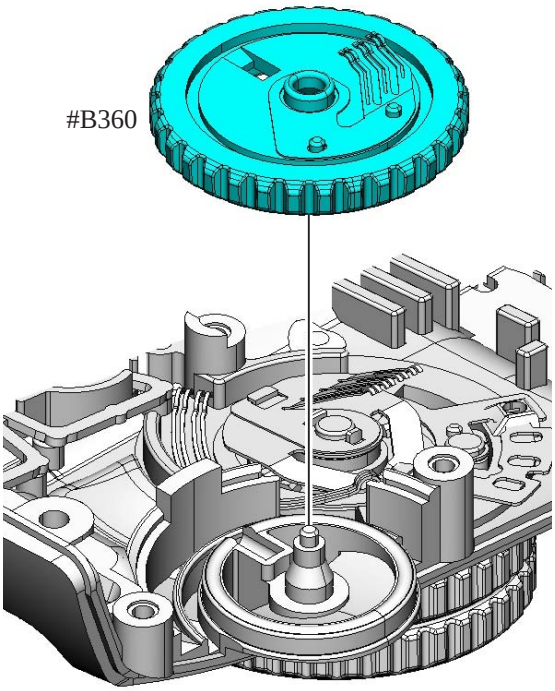

- Put the click ball (#362) all the way seated.
- Put the click spring (#361) by inserting ① -side first, and then push ② -side inside as below.

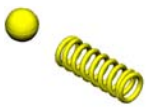

LEN317A
Dipping

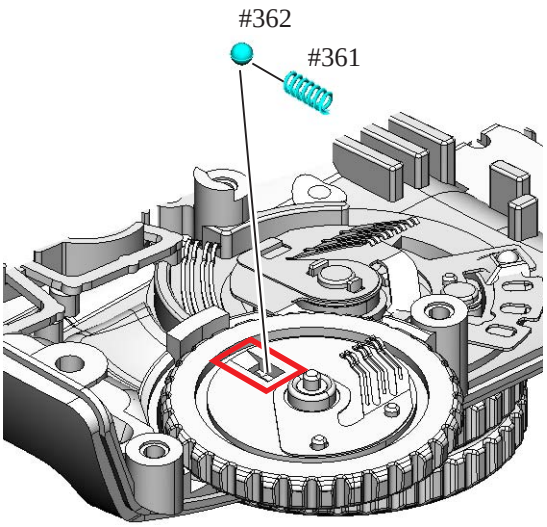

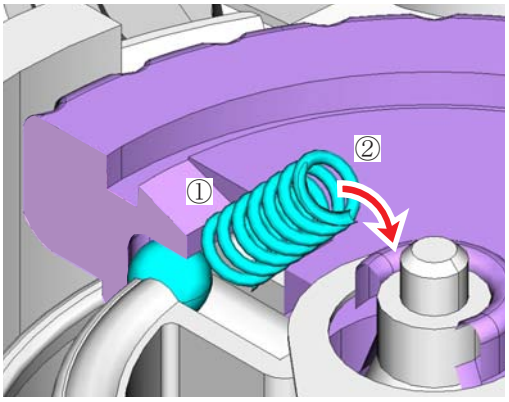

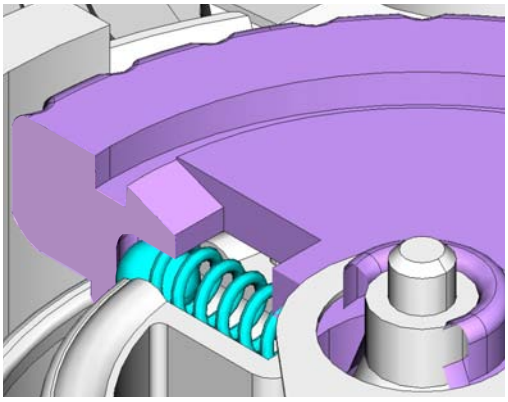

User ID:INC

Top cover FPC unit

- Mount the top cover FPC unit (#B1007).

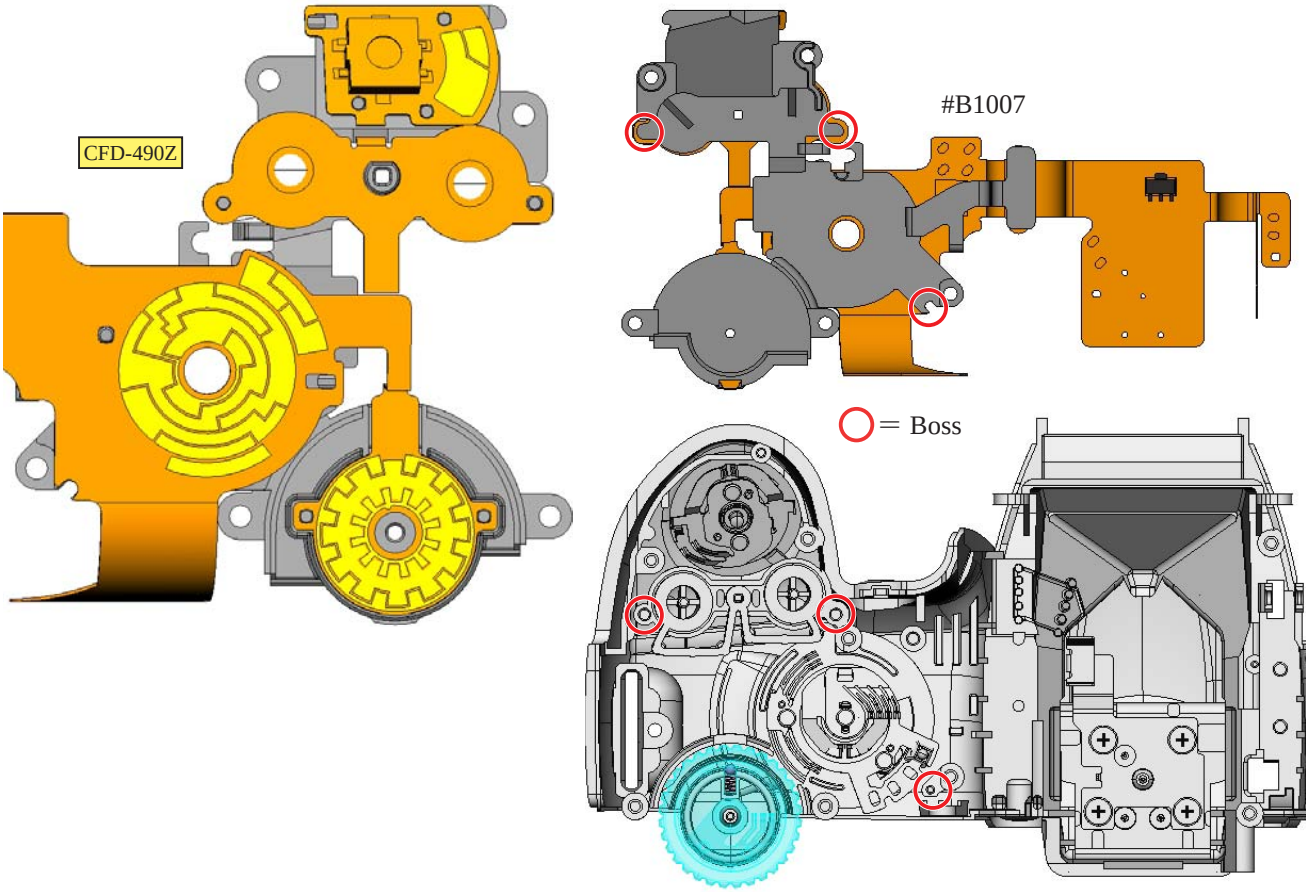

- Tighten the three screws (#617).
- Make five solders on the hot shoe.

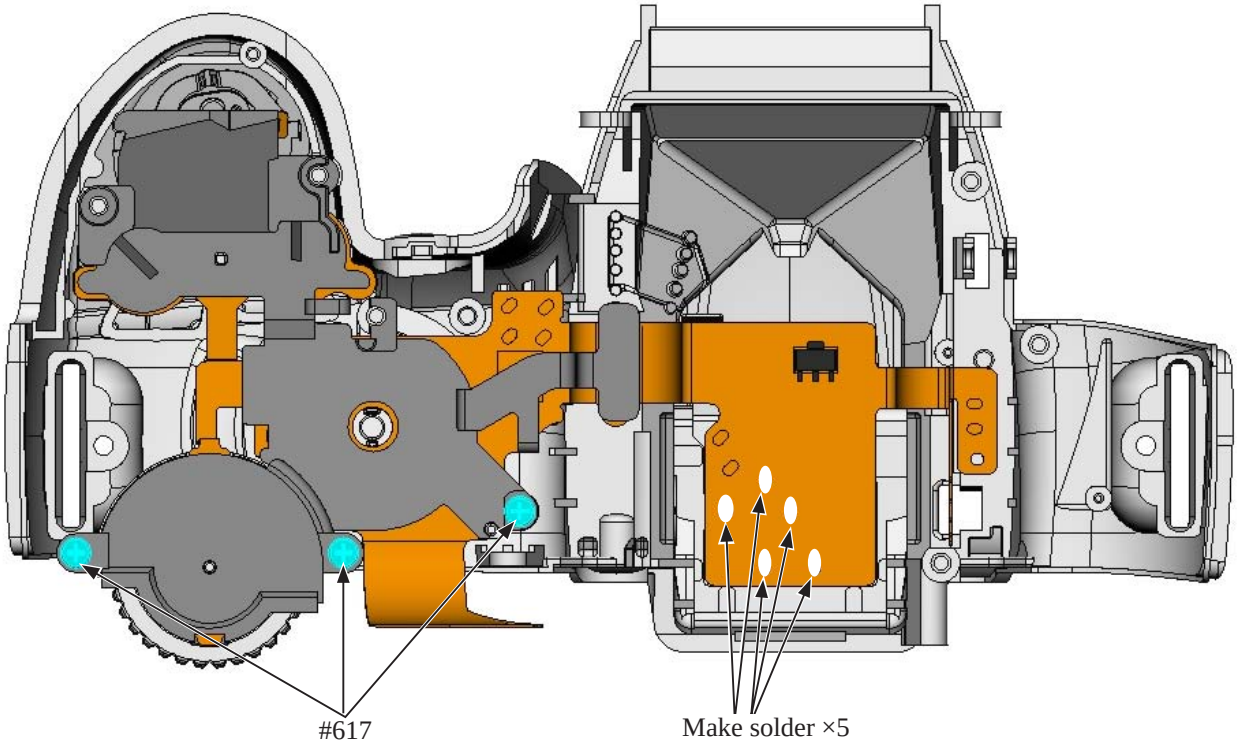

User ID:INC

AF assist lamp unit

- Mount the AF assist lamp unit (#B325) by fitting the boss position, and tighten the screw (#629).
- Solder the two wires.

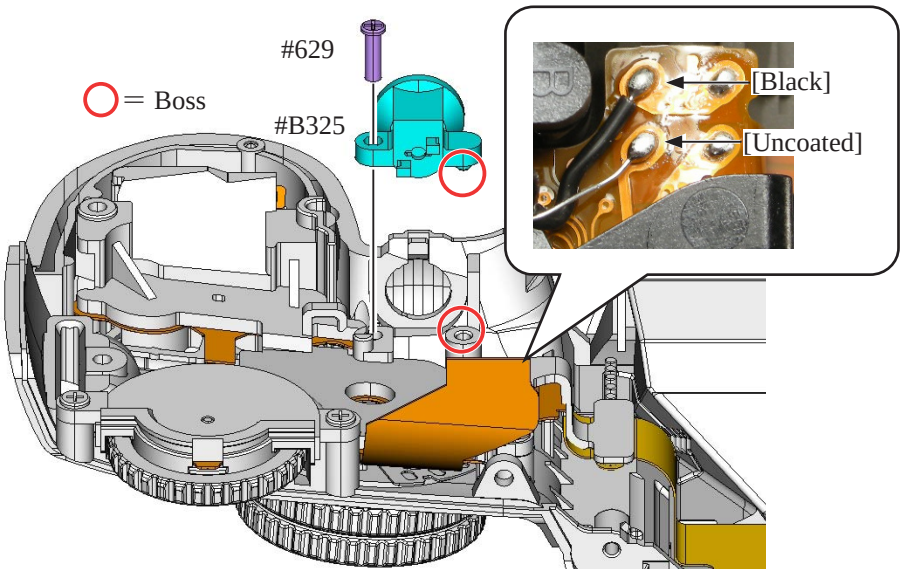

- Solder the two wires of the harness (#1027).

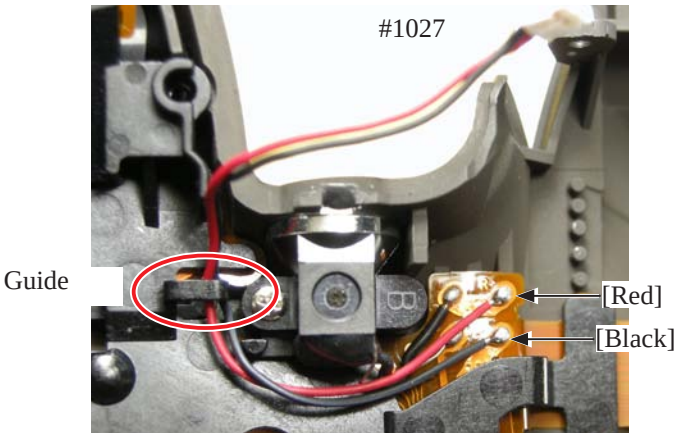

SB lower cover unit

- Mount the SB lower cover unit (#B302) while extending it as indicated by the arrow.

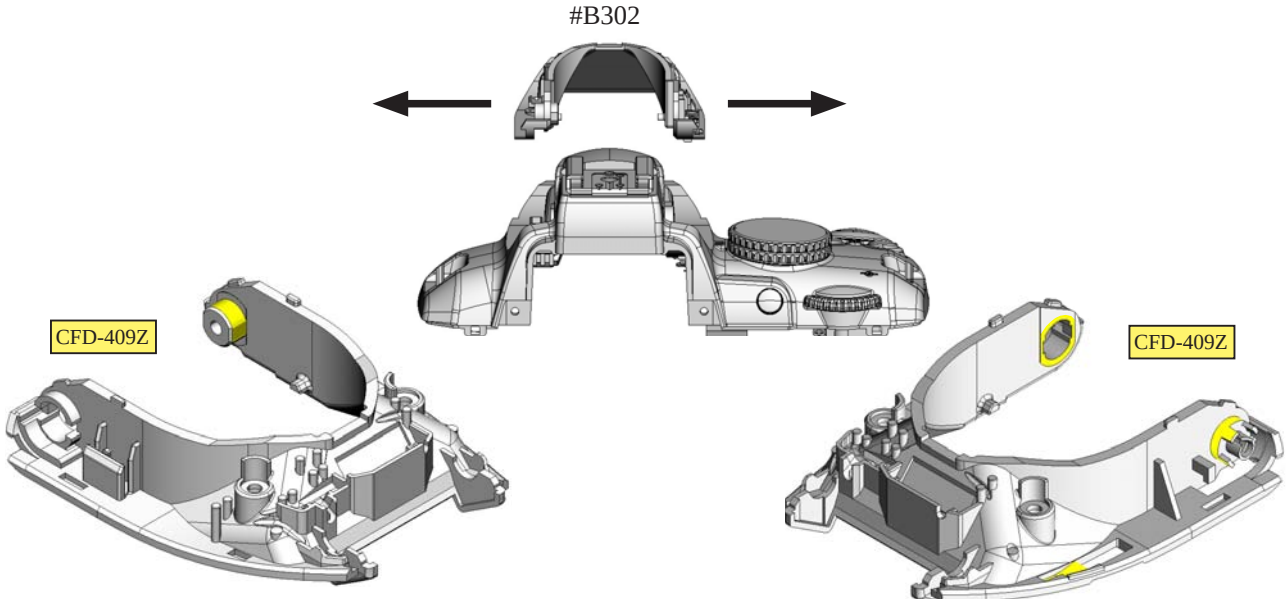

User ID:INC

• Attach the roller (#308) and hook it.

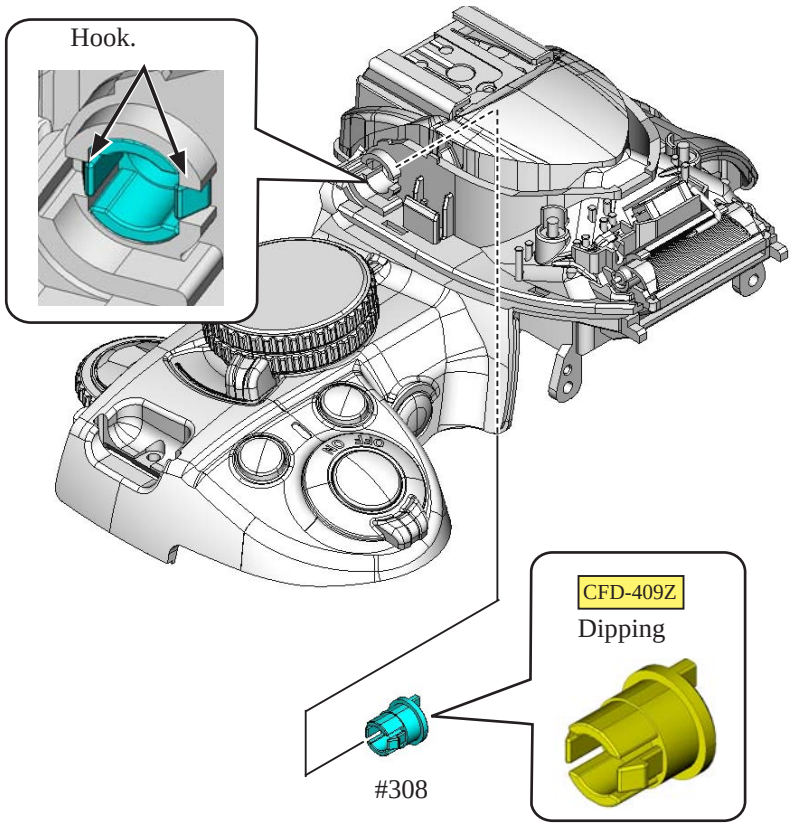

• Put the wires through the hole.

• Arrange the four wires along the four guides.
• Solder the two wires.

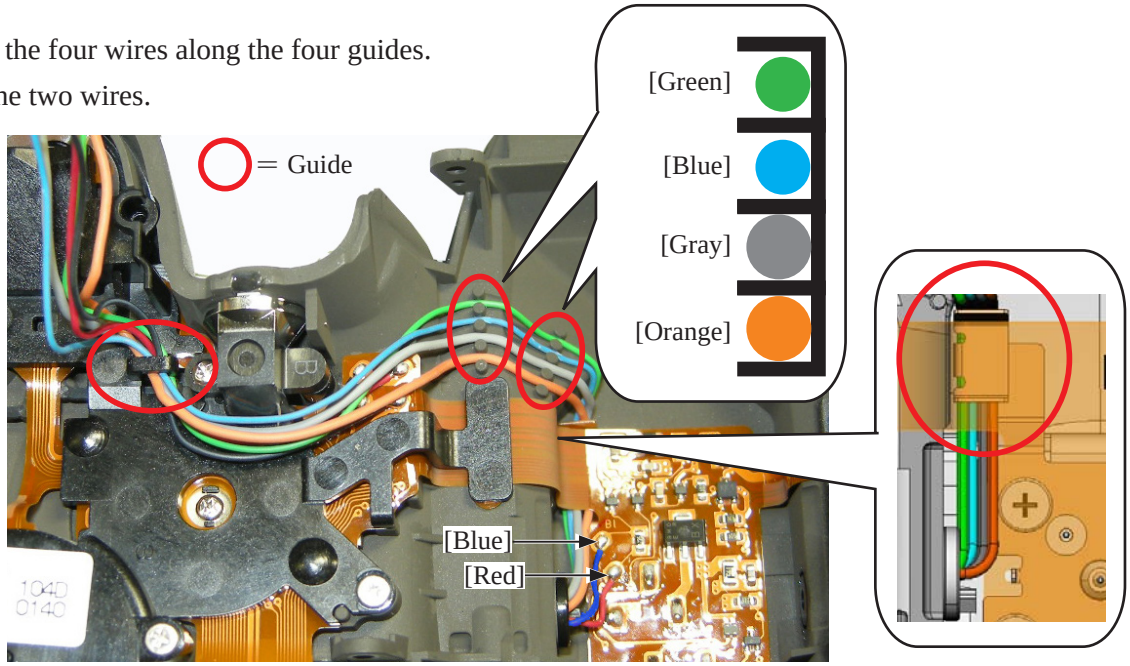

User ID:INC

- Attach the spring (#305) by fitting in the groove.
- Attach the spring (#459).
- Hook the spring (#305).

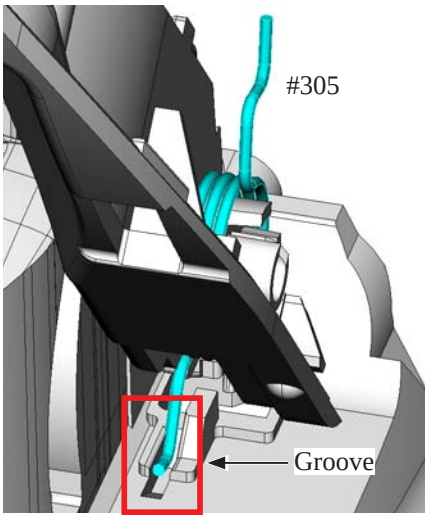

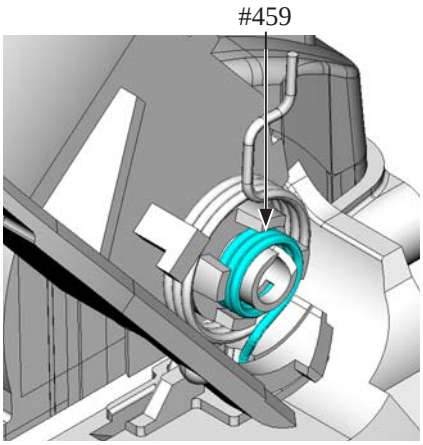

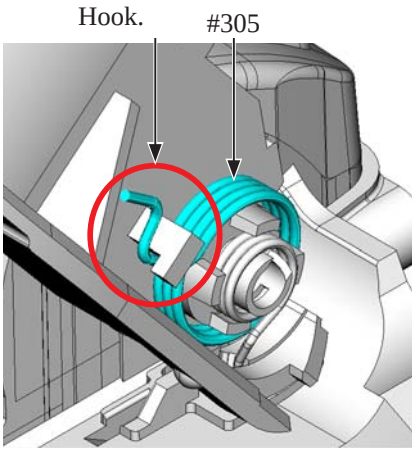

SB upper cover

- Mount the SB upper cover (#301).
- Tighten the two screws (#628).

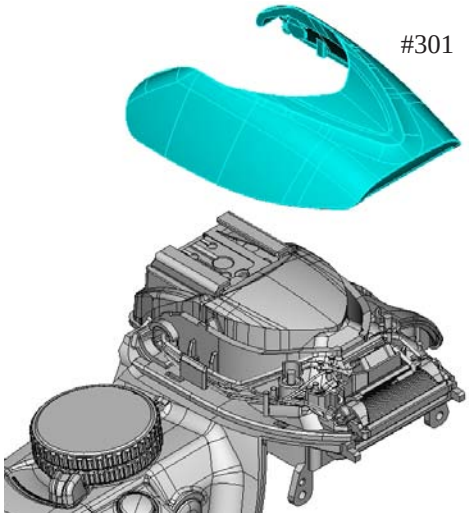

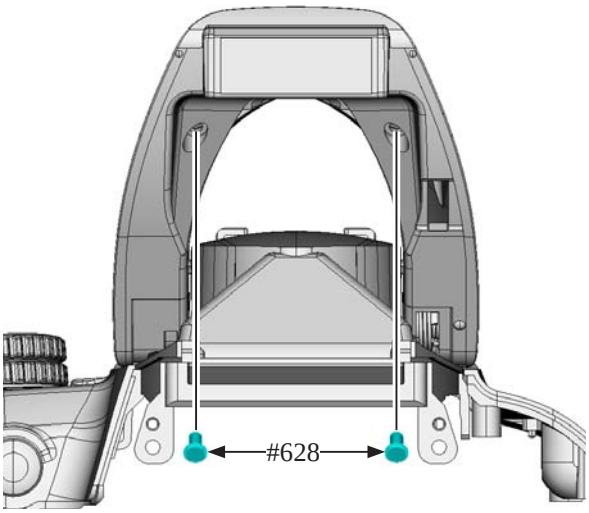

User ID:INC

SB release PCB unit

- Attach the spring (#458) to the SB lock lever (#309).
- Attach the spring and SB lock lever together on the top cover.

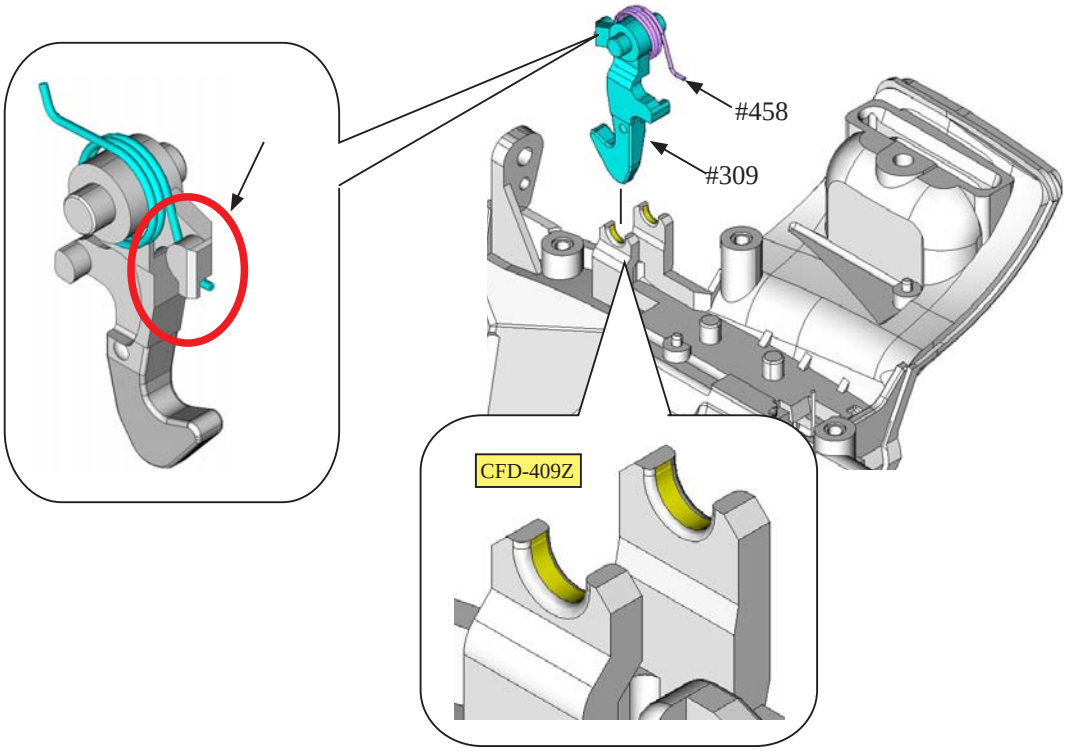

- Mount the SB release lever (#456).

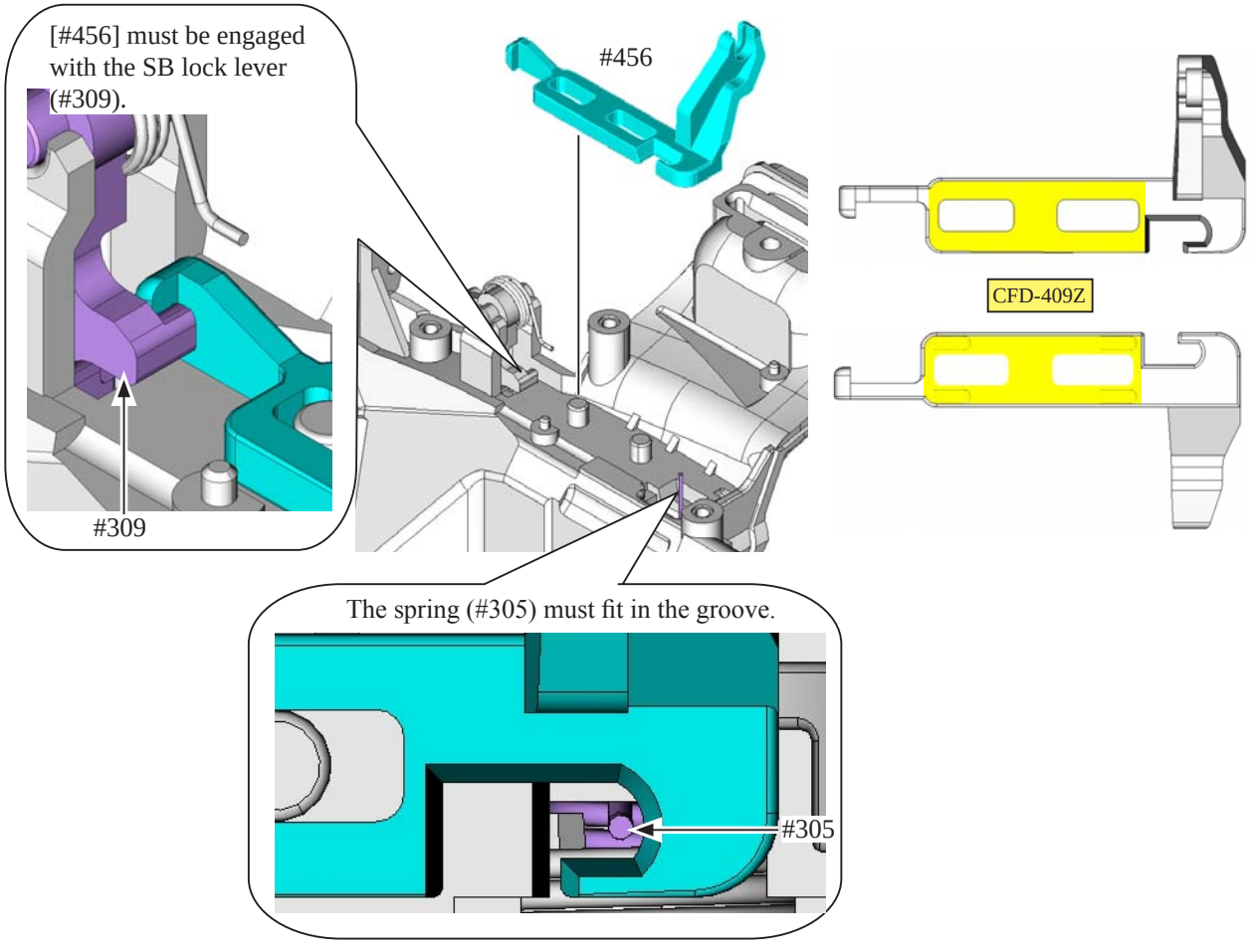

User ID:INC

- While hooking the top cover lever FPC unit (#B1007) in the numeric order from ① to ③ , mount the SB release PCB (#455).
- Tighten the three screws (#617).

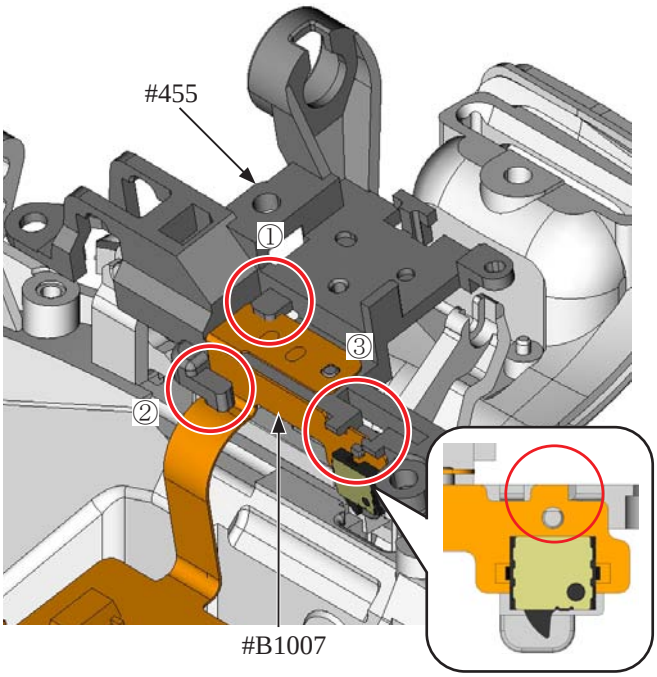

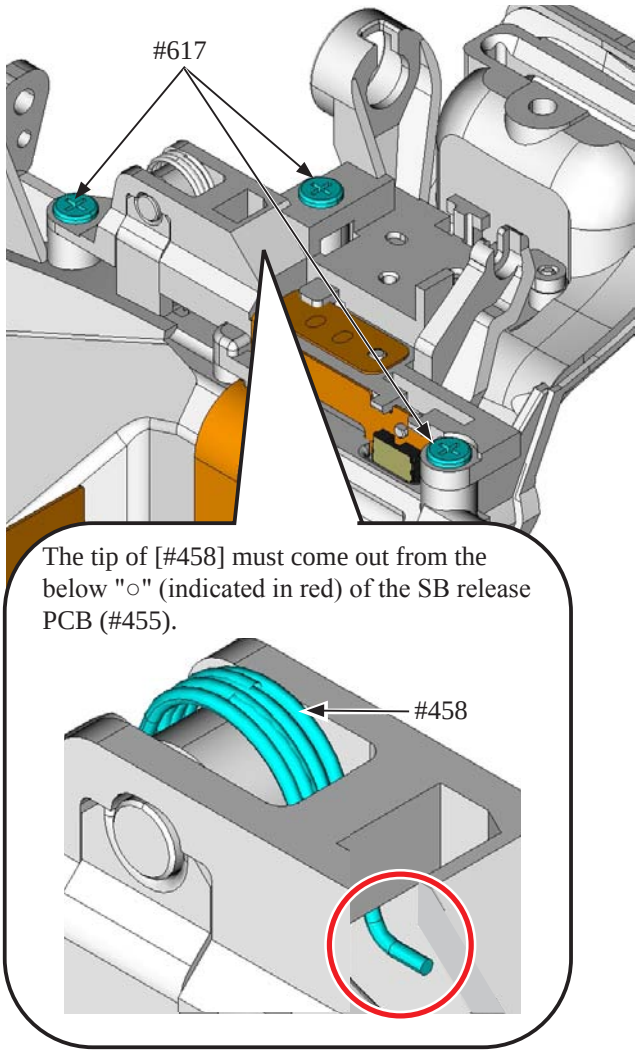

- Attach the driving magnet (#36), and tighten the screw (#618).
- Solder the two wires.

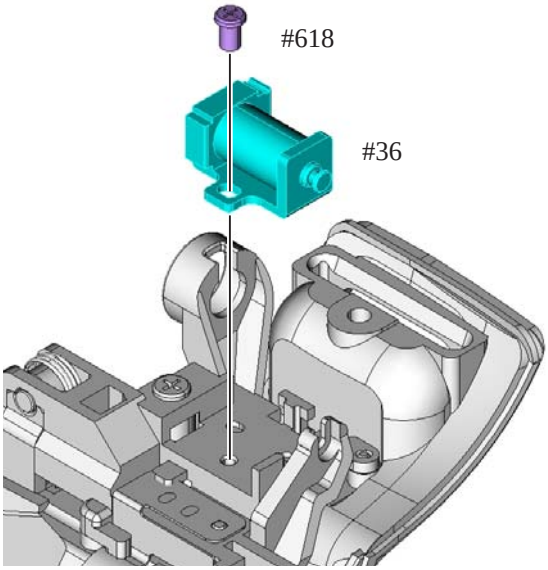

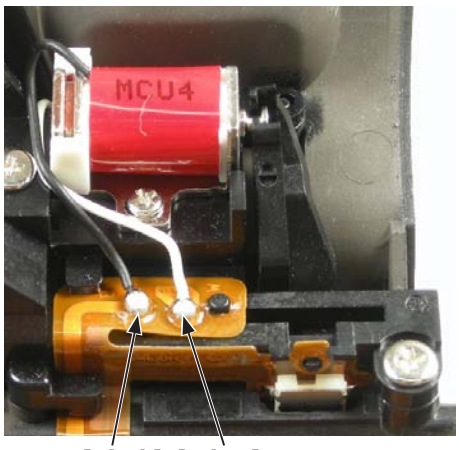

User ID:INC

• Attach the microphone (#1053), and apply the adhesive (C-8008B).

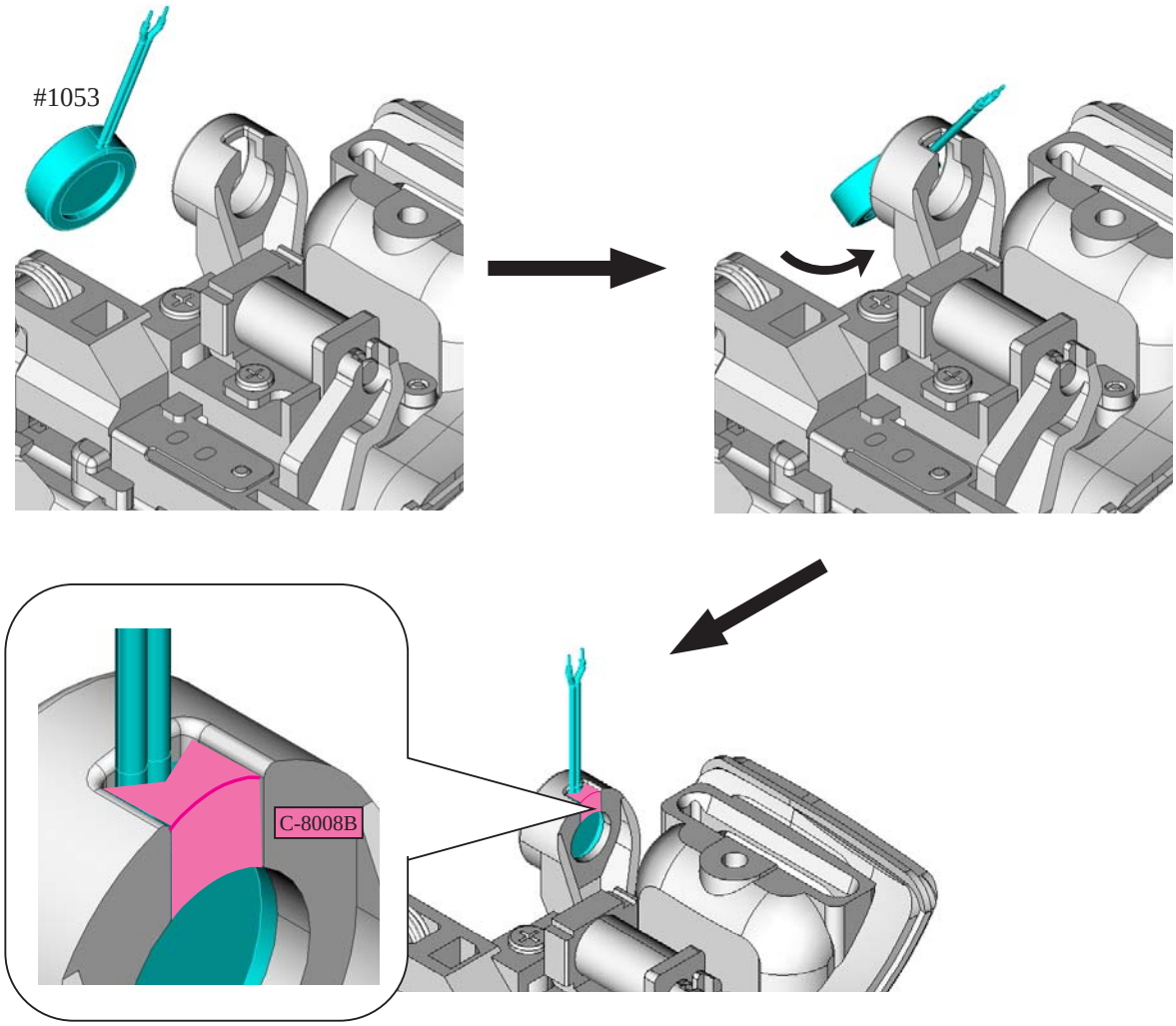

User ID:INC

4. Rear Cover

SD access lamp window

- Attach the SD access lamp window (#408), and apply the adhesive (EDC0021).

TFT sponge

- By fitting in the groove of the rear cover, attach the two sponges (#404) and two sponges (#405).

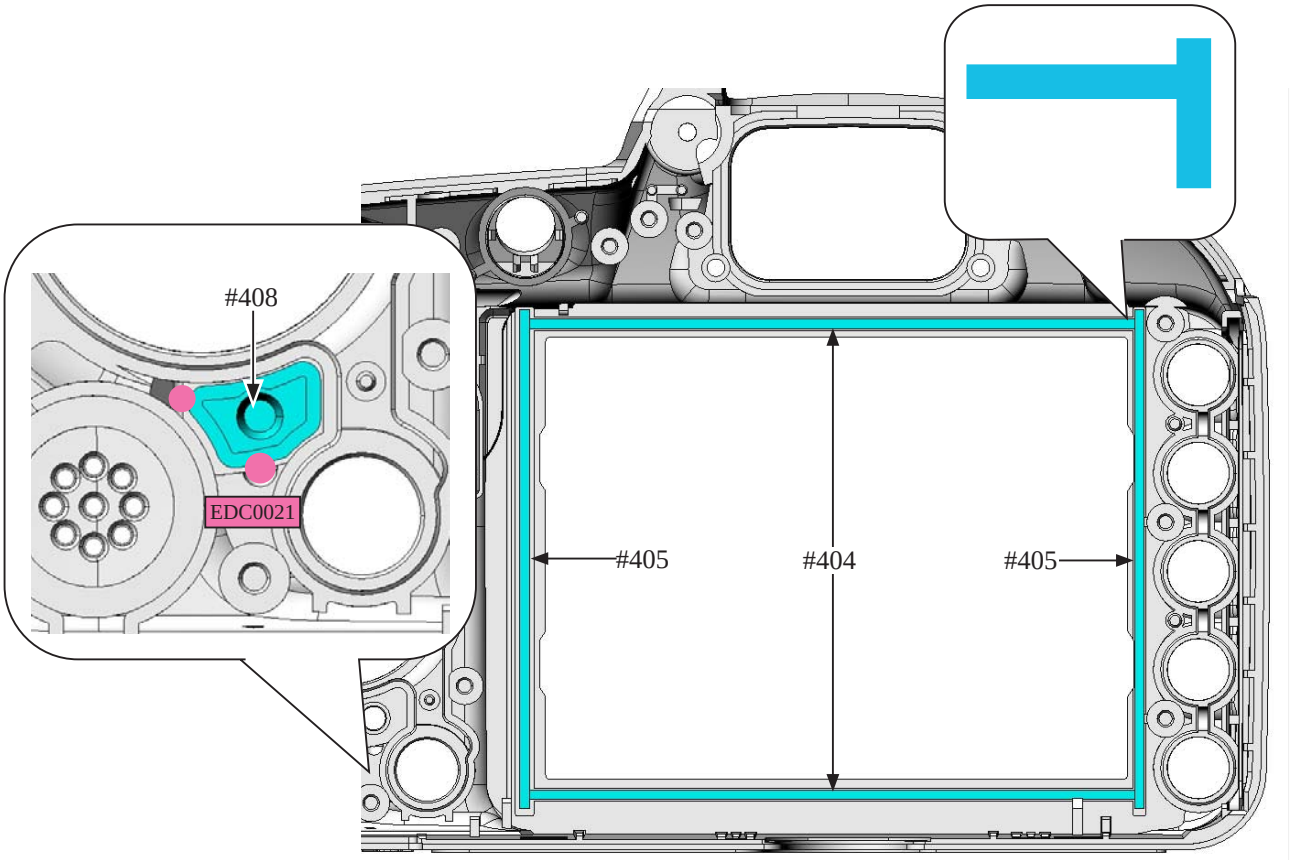

LV lever

- Attach the LV lever (#470), spring (#472), and retainer plate (#471). Then, tighten the two screws (#619).

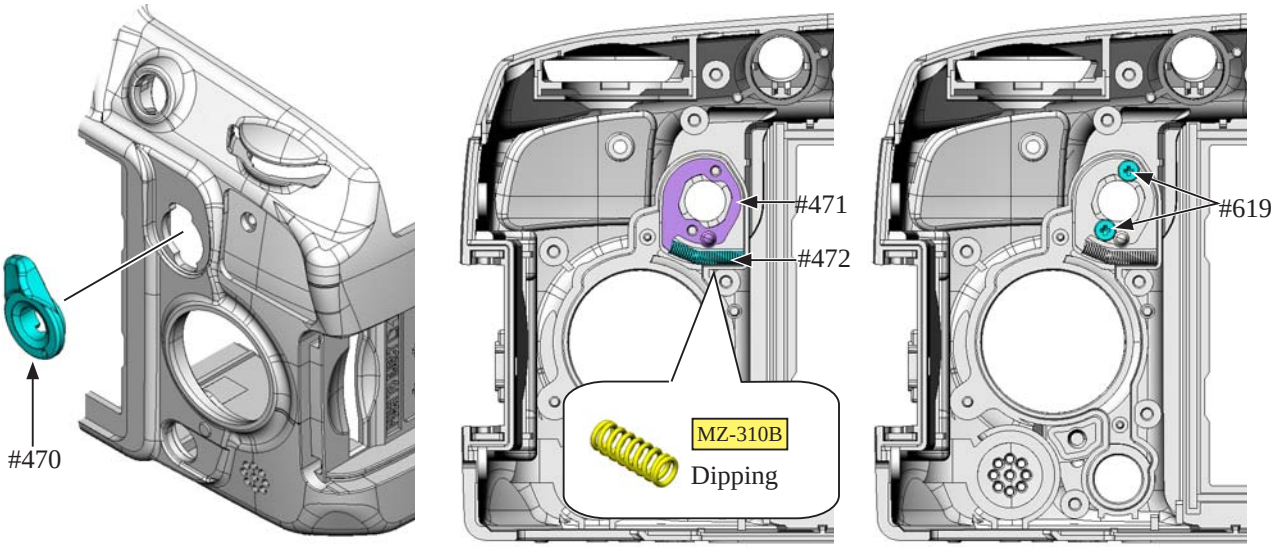

User ID:INC

Rear button

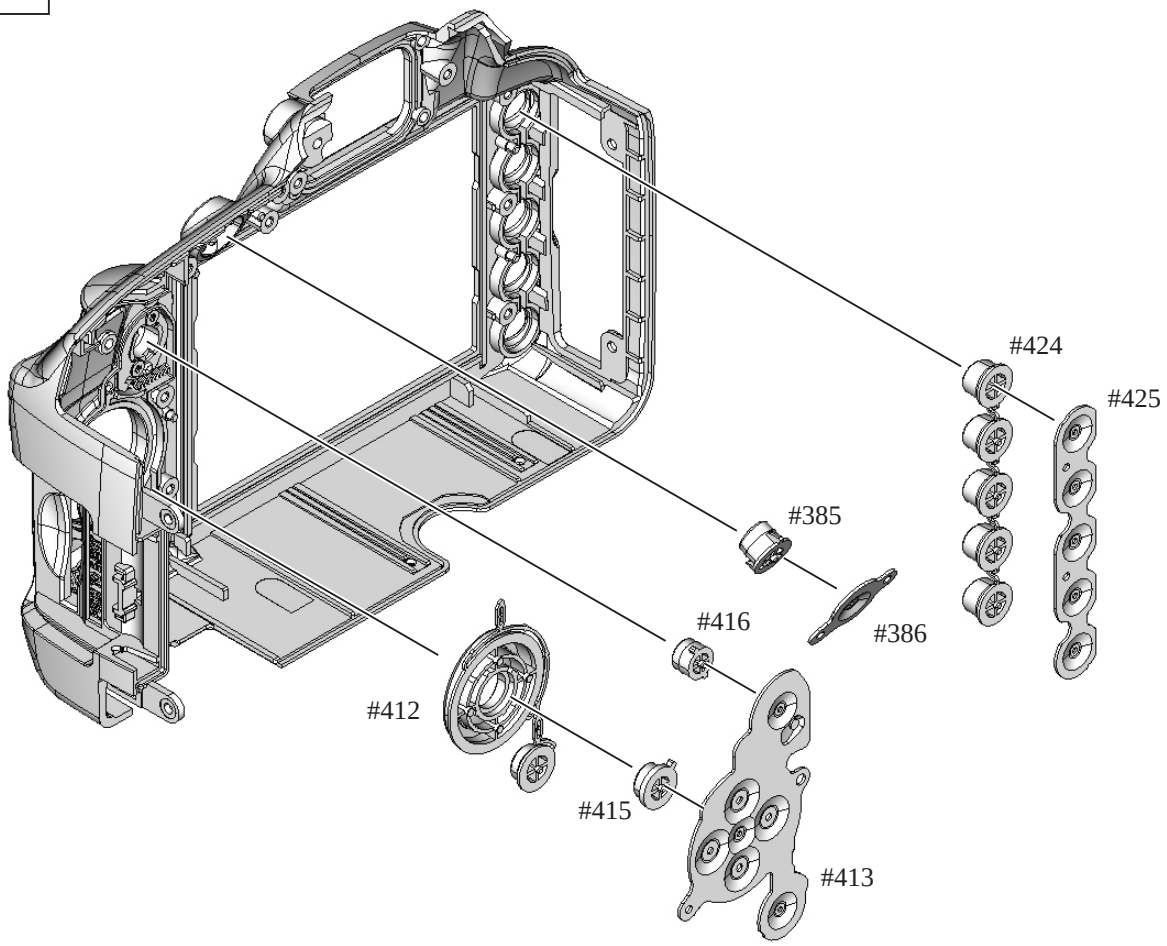

LCD monitor

- Mount the LCD monitor (#1049).

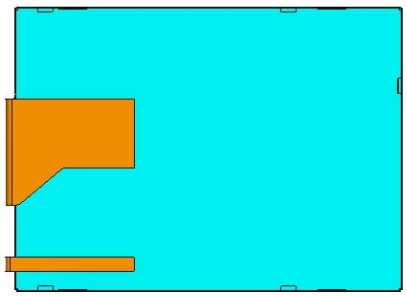

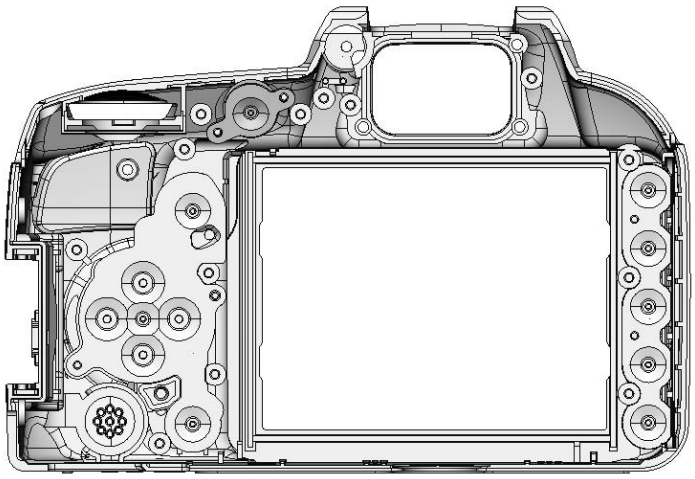

User ID:INC

Rear FPC

- Pass the FPC of the LCD monitor (#1049) through the hole of the rear FPC unit (#B1016) for assembly.
- Connect the two FPCs.

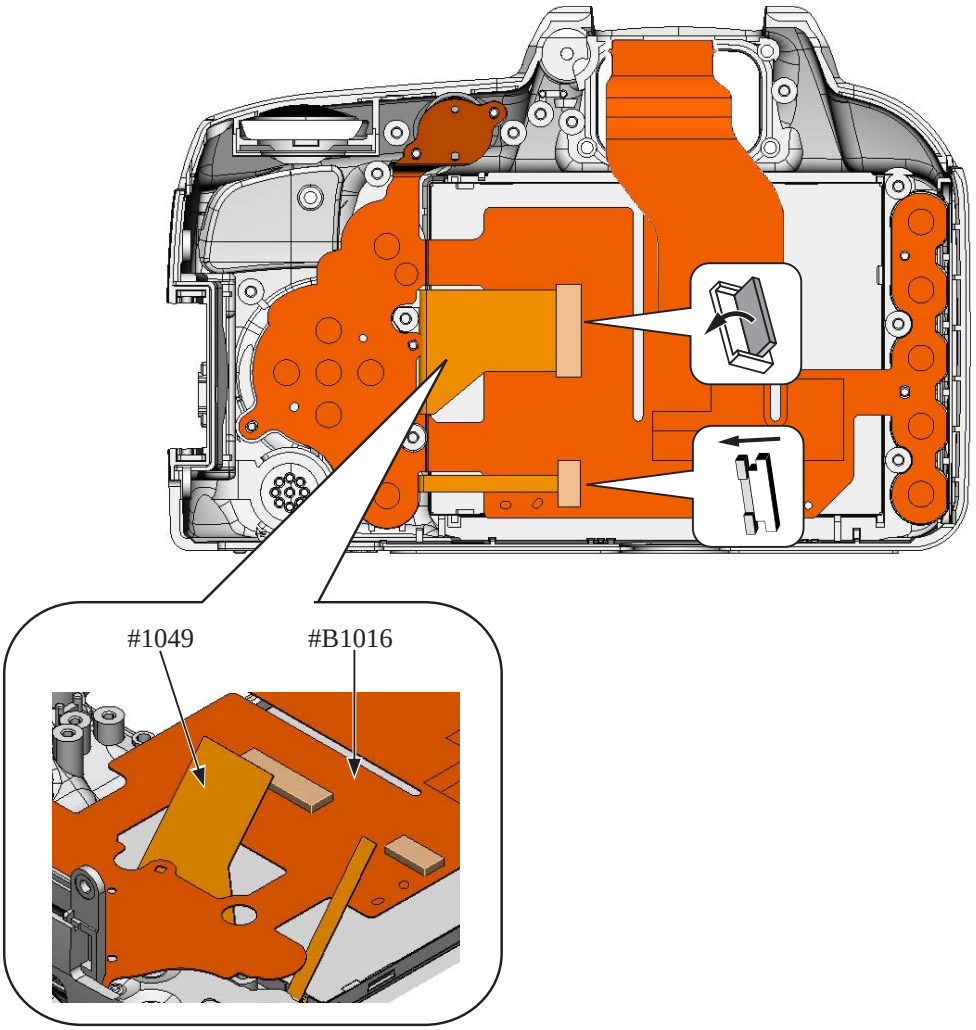

Speaker

- Attach the speaker (#1054).

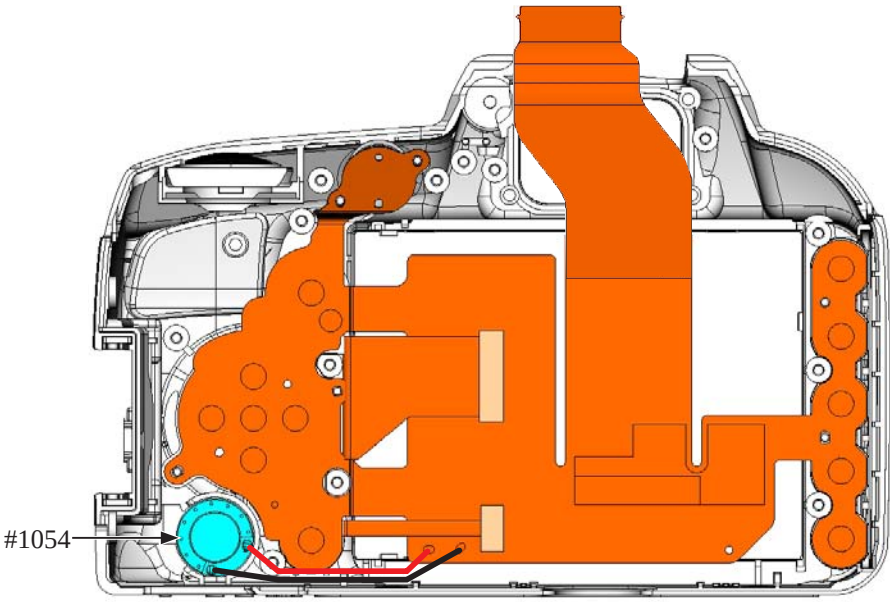

User ID:INC

- Mount the retainer plate (#406).
- Tighten the nine screws (#621).
- Attach the two pieces of the tape [TA-0005 (10×20)].

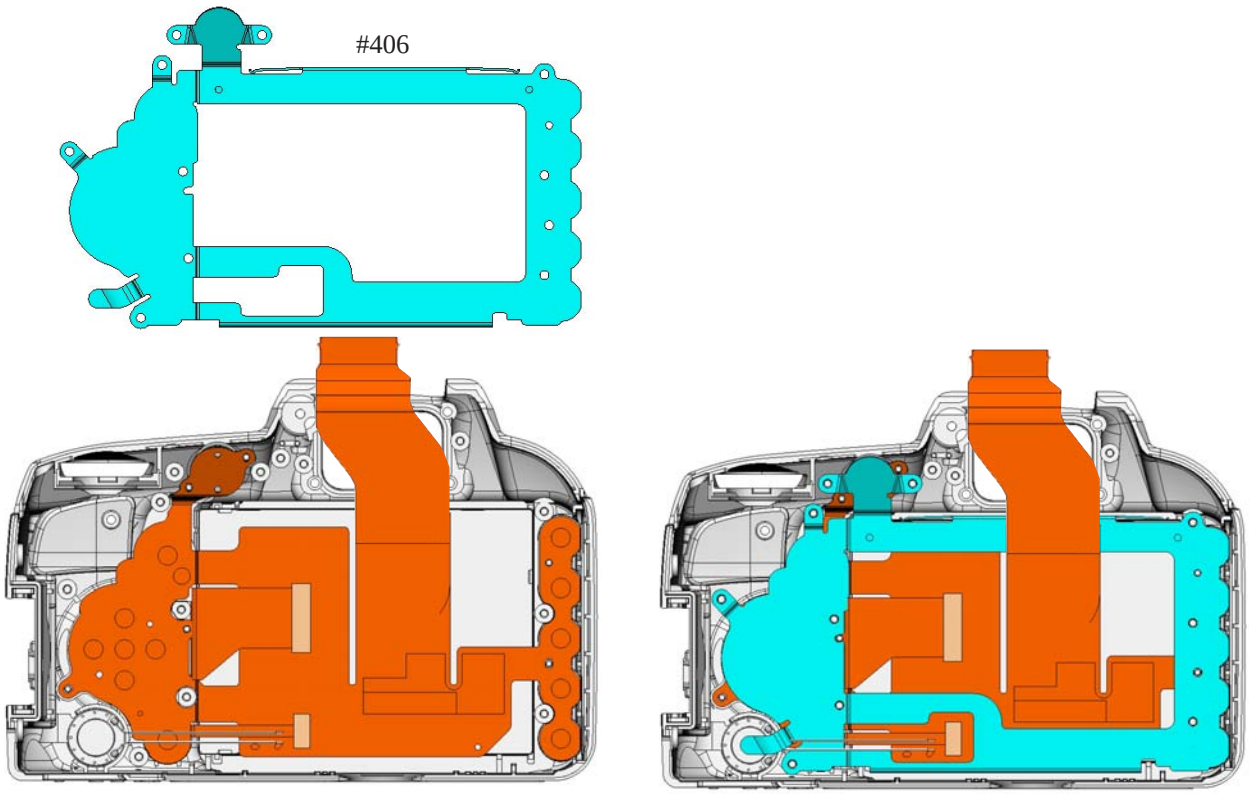

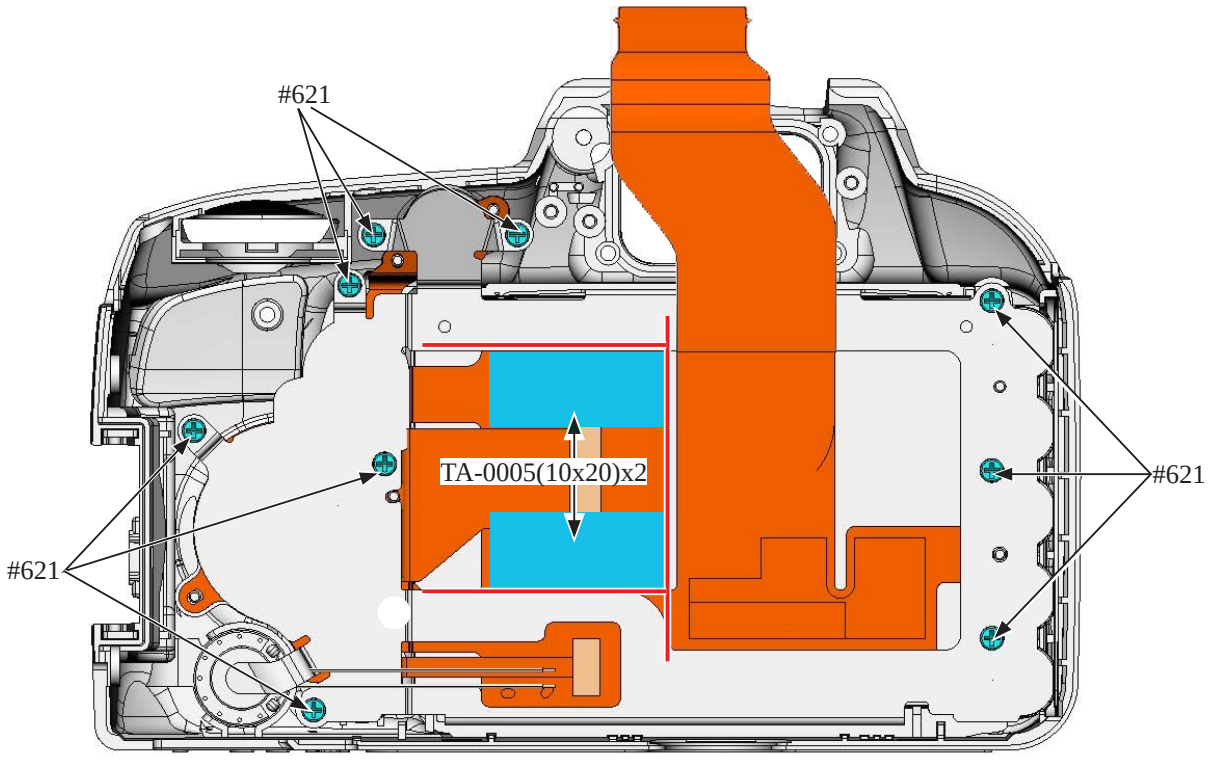

User ID:INC

- Solder the two wires of the speaker (#1054).

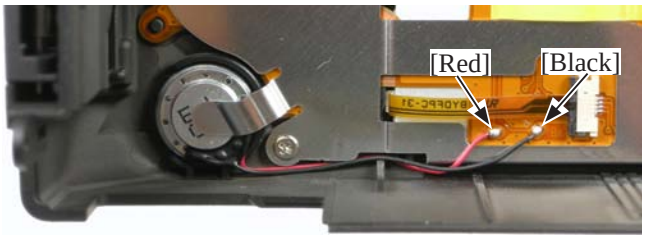

Eyepiece

- Mount the diopter adj. knob (#265).
- Mount the retainer plate (#266).
- Tighten the screw (#621).
- Attach the sponge (#476) to the eyepiece frame (#475).
- Mount the eyepiece frame unit on the rear cover, and tighten the two screws (#624).

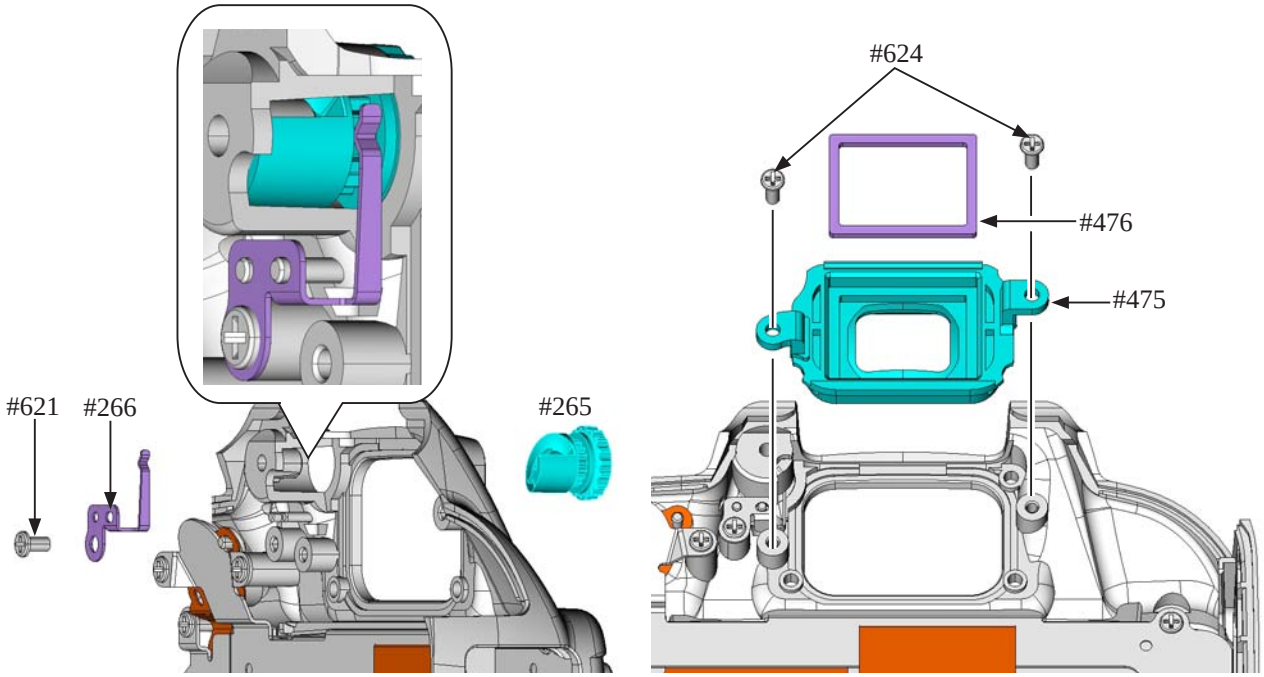

LCD monitor cover

- Attach the double-stick tape (#403).
- Mount the LCD monitor cover (#402).

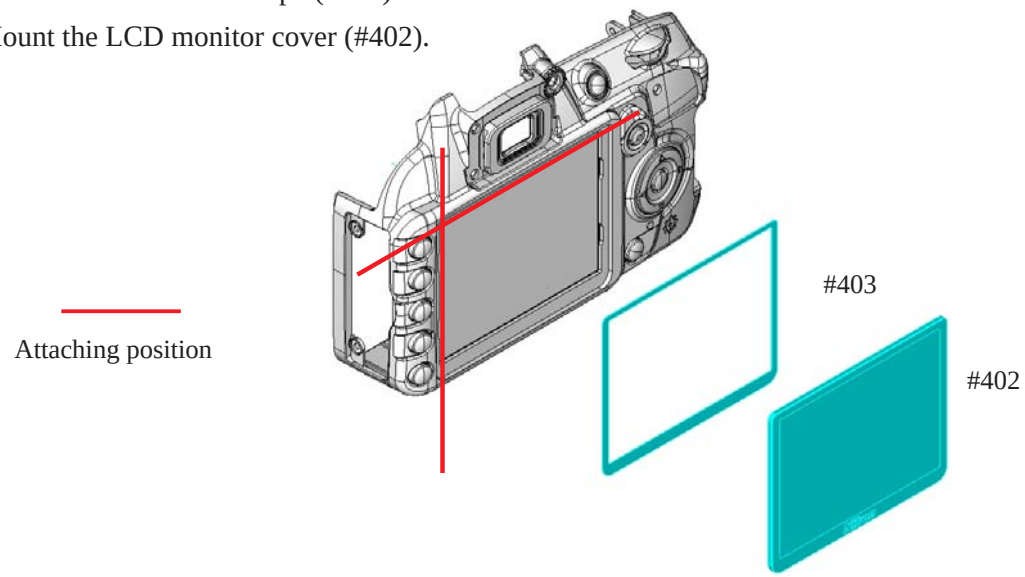

User ID:INC

SD cover

- Attach the SD cover unit (#B431) to the rear cover unit.

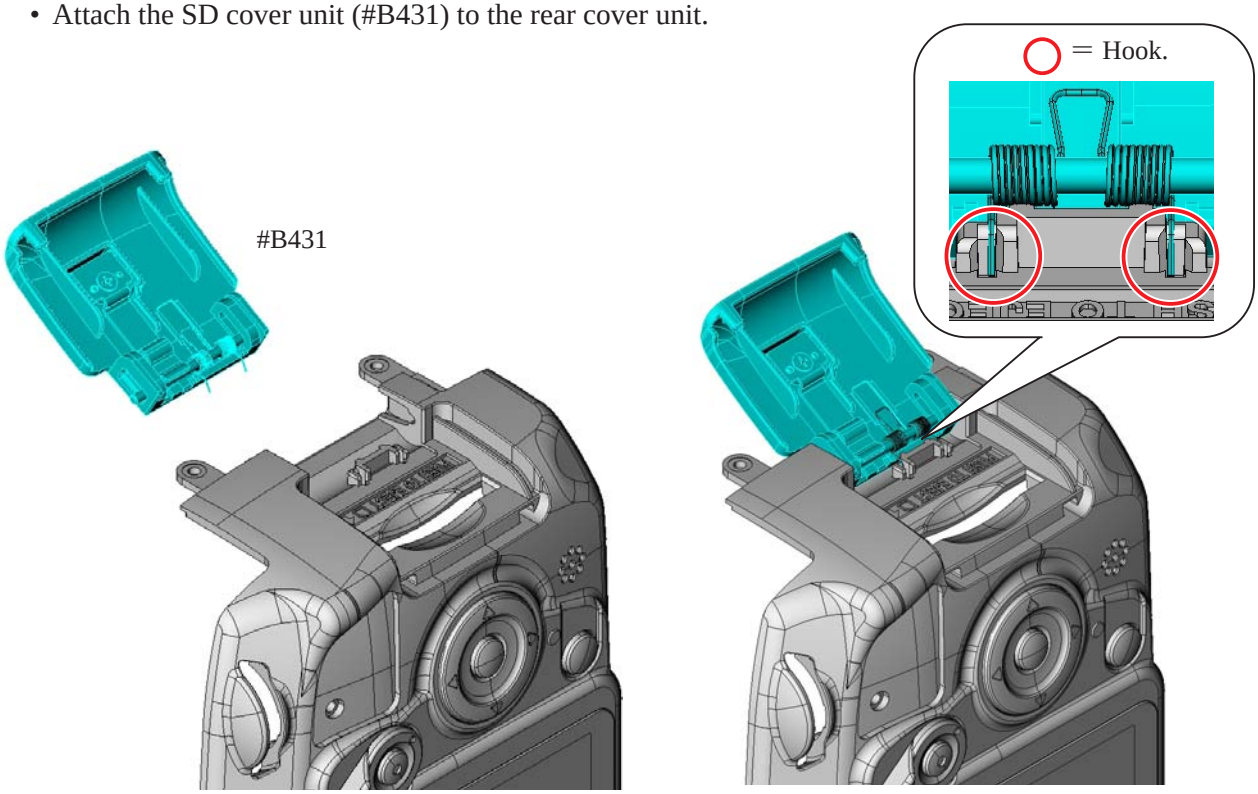

Caution: When the SD cover is closed, the shaft may be caught by the click plate sometimes. In this case, push the shaft in the direction of the arrow.

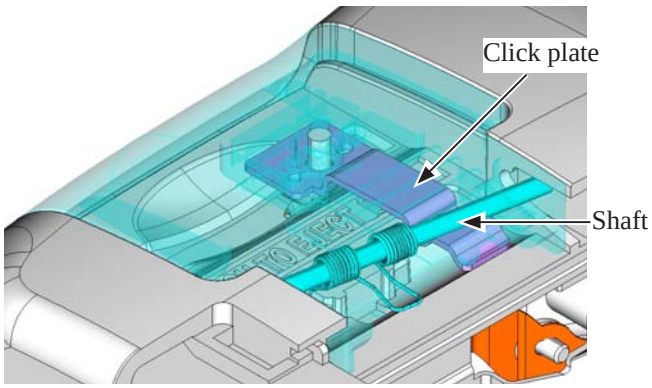

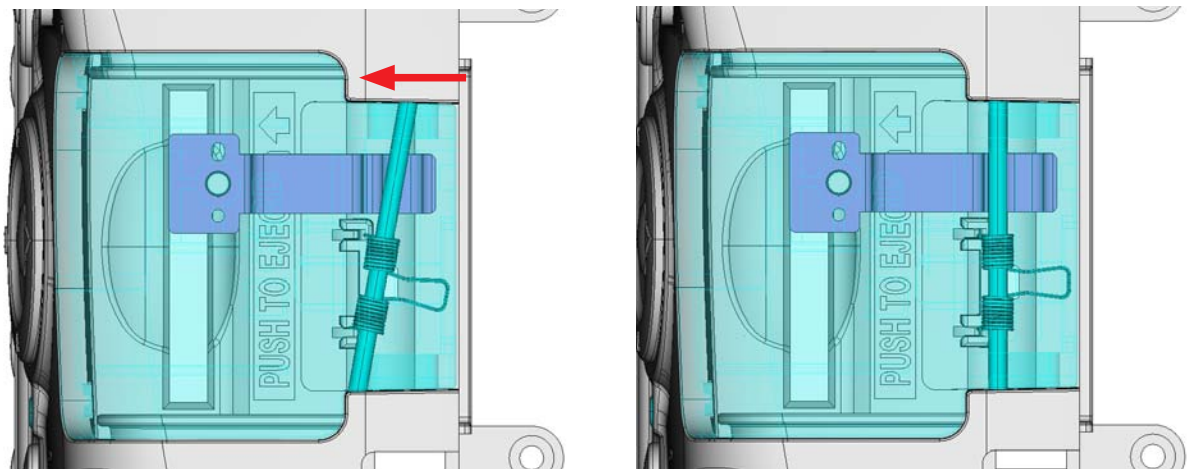

User ID:INC

5. External Appearance

Top cover unit

- Lay the wires and FPC aside as below, and mount the top cover unit.

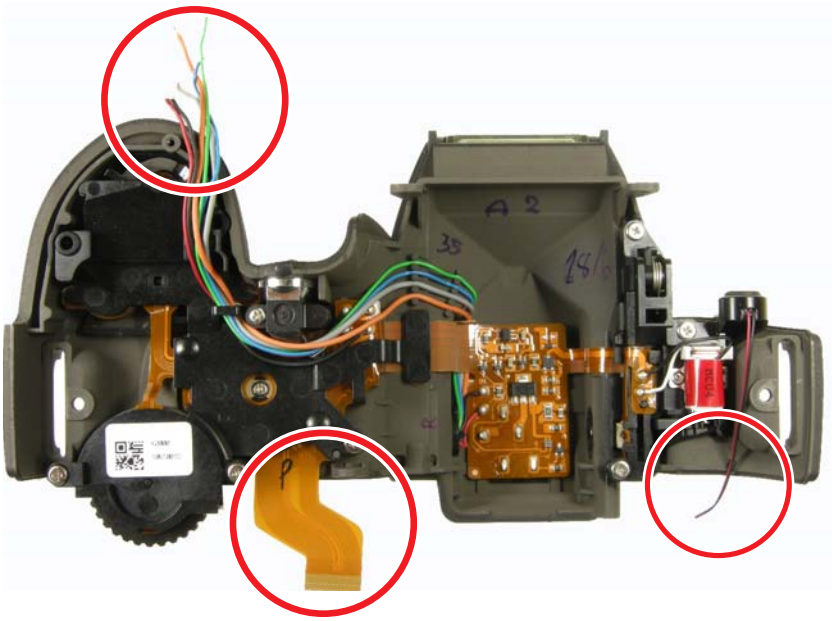

- Tighten the screws (#631, #632, and #656).

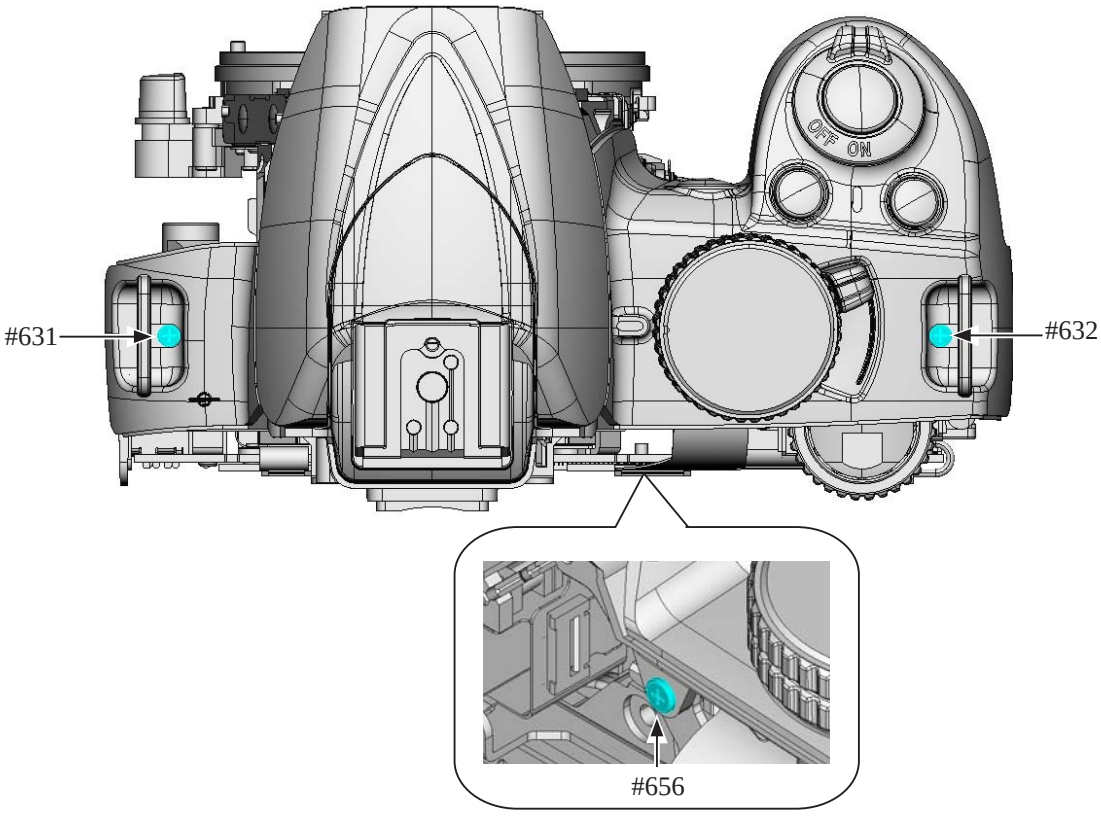

User ID:INC

• Solder the four wires of the SB lower cover unit.

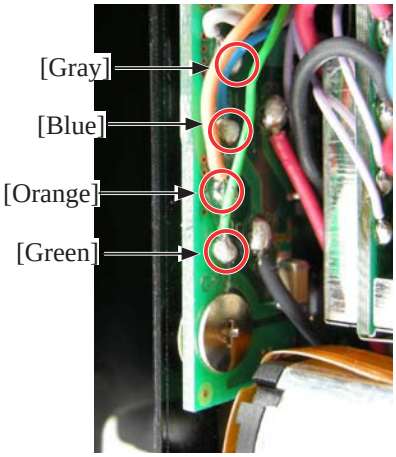

• Connect the FPC and harness.
• Arrange the wires as below.

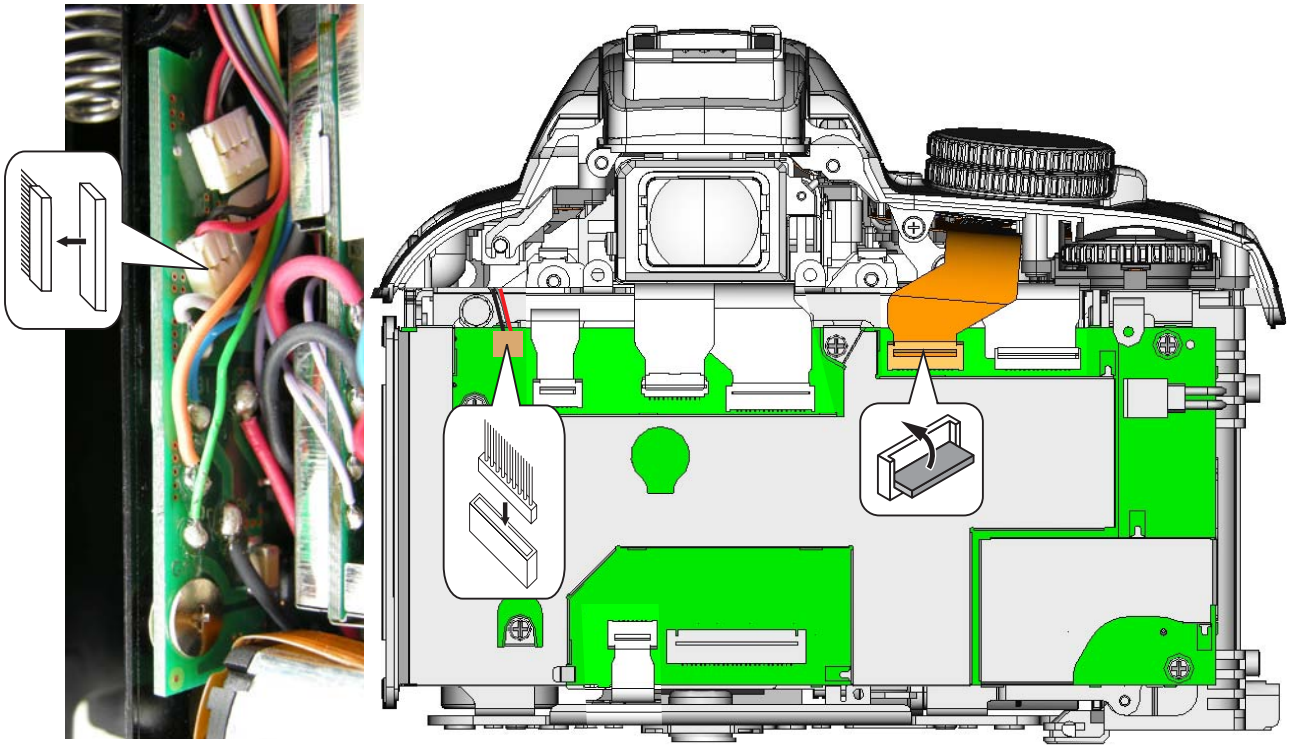

User ID:INC

Adjustment of camera body (except imaging)

- Connect the FPC of the rear cover unit.
- Turn the diopter adjustment knob all the way to the right, and mount the rear cover unit.
- Tighten the screws (#631 and #623) (for temporary assembly).
- Insert a paper, etc, into the battery box, in order to secure the power connector (EP-5A). Then, confirm that the power can be ON.

Be careful NOT to touch the discharging areas and condenser.

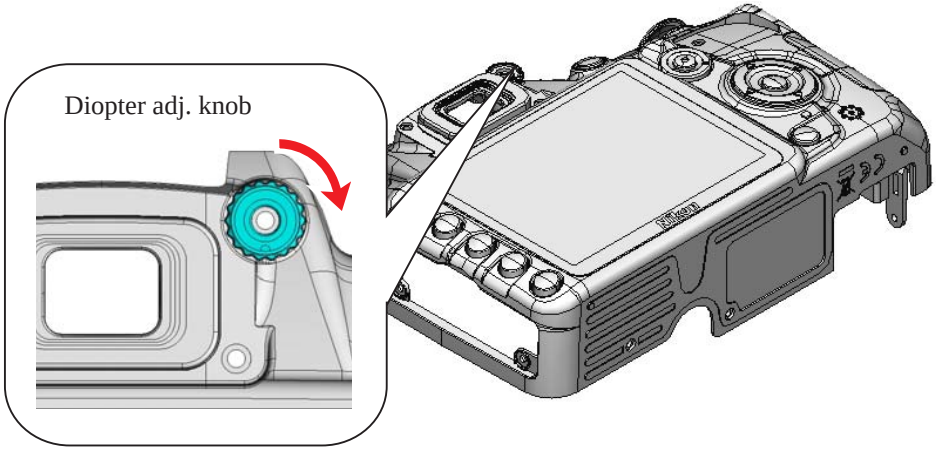

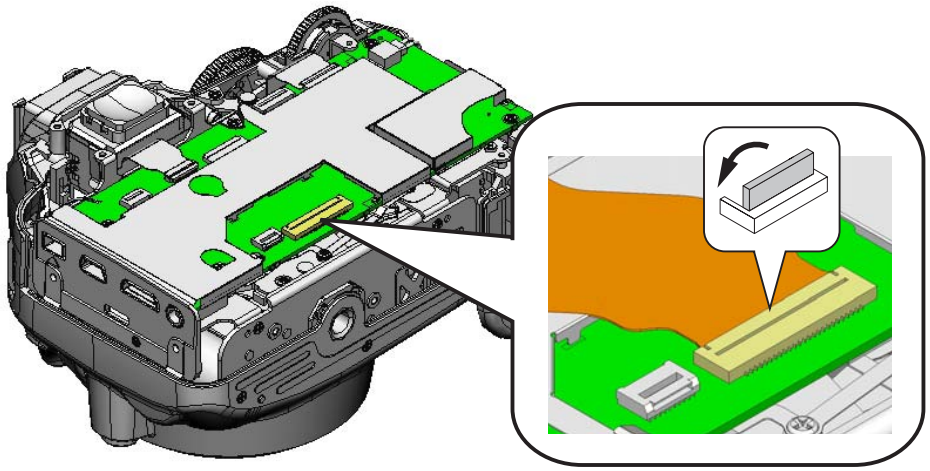

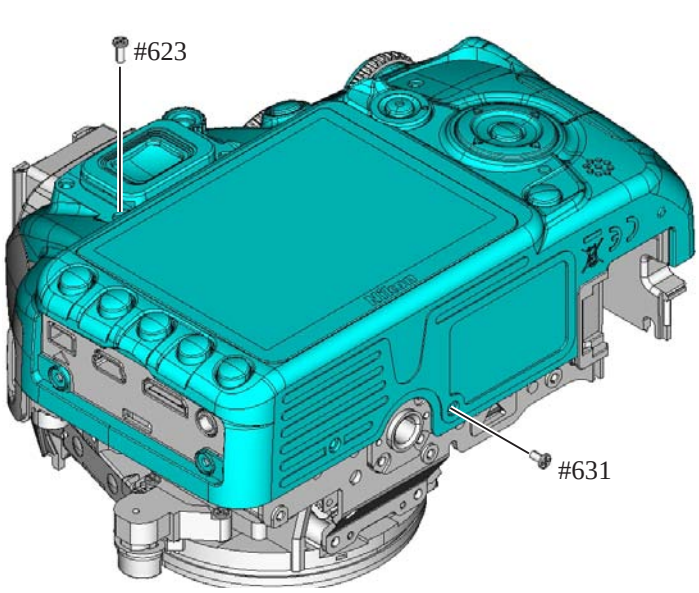

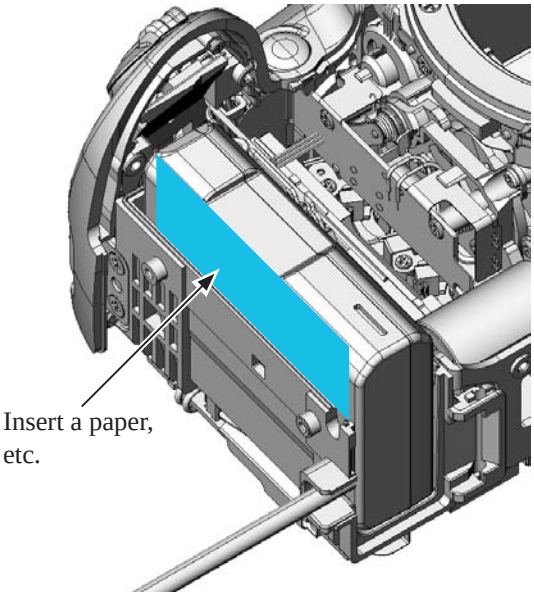

User ID:INC

Necessary inspection and adjustment of camara body (except imaging) when parts are replaced

- **When the TOGO PCB unit has been replaced, be sure to update the Firmware of MAIN/RISC and the compensation data on lens distortion before writing the initial values. However, the initial values for imaging will be written automatically.**
- **During the inspections and adjustments, do NOT touch the discharging areas and condenser.**

(○: Adj. △ : Insp. only)

	Writing of initial value	Insp. for AE CCD positioning	Insp. & adj. for AE accuracy	Insp. & adj. for aperture accuracy	Adj. of voltage of battery check function	Insp. & adj. of built-in SB flashlight qty	Insp. & adj. for AF accuracy
Shutter curtain unit				○			
TOGO PCB unit	○	△	○	○	○	○	○
Power drive PCB							
AF sensor unit							○
Top cover unit or SB lower case unit						○	
SZ-DC/DC PCB unit							
Prism box unit		△	○				
SQ PCB unit				○			
MG PCB unit				○			
Front body unit		△	○	○			○

User ID:INC

Firmware update

- Refer to "Firmware update" of ADJUSTMENT Separate Volume ② for details.

How to connect camera and PC

- Refer to "How to connect camera and PC" of ADJUSTMENT Separate Volume ② for details.

How to install inspection and adjustment software for camera body (except imaging)

- Refer to "How to install inspection and adjustment software for camera body (except imaging)" of ADJUSTMENT Separate Volume ② for details.

Tool (Device)
J65153 Camera-body adjustment software

Inspection and adjustment for AE accuracy

- Refer to " ① Inspection and adjustment for AE accuracy" of ADJUSTMENT Separate Volume ② for details.

Tool (Device)					
J19123 EF-1	RJ is unavailable EF-8000	J18267 LENS AF50/1.4D	J18498 Lens AF 28/2.8D	J18499 Lens AF-S VR 70-300/4.5-5.6	Use Nikon product Lens AF 70-300/4-5.6D
Shutter tester				70-300mm lens	

Power supply (10V 5A)	Digital meter	Flashmeter	Converted power connector EP-5A	J18360 Standard reflector

J15428 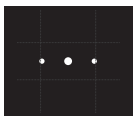 AE CCD chart board	J15443 2WAY level	J15444 2WAY stage	J63070 Color viewer	Use Nikon product Power connector EP-5A

User ID:INC

Inspection and adjustment for AF accuracy

- Refer to " ② Inspection and adjustment for AF accuracy" of ADJUSTMENT Separate Volume ② for details.

Tool (Device)				
J18266 Z adjustment lens (for 1m)	J15259 AF adjusting tool	Lens holder	J15280 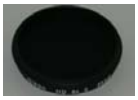 ND filter 8×	J15264 RJ AF illuminator box (J15264) is disused. For substitutes refer to TIE-03045.
J15407 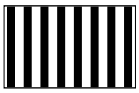 Multi cam 2000 AF chart	J15409 Chart board	J63070 Color viewer	J63068 Luminance meter （BM-3000）	J11374 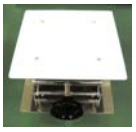 Jack 200×200 mm
J19123 EF-1	RJ is unavailable EF-8000	J18230 YAW/PITCH adjustment tool	Hexagonal key （φ 1．5mm）	Use Nikon product. Power connector EP - 5A
Shutter tester				

Standard lens or sub-standard lens AF 50/1.4D	J19124 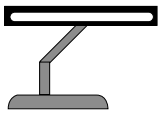 Z-light×2 *Equivalent fluorescent: flicker-less "Inverter" lighting.	J18393 Slant chart	J15443 2WAY level	J15444 2WAY stage

User ID:INC

Confirmation of data

- Refer to " ③ Confirmation of data" of ADJUSTMENT Separate Volume ② for details.

Switch information monitor

- Refer to " ④ Switch information monitor" of ADJUSTMENT Separate Volume ② for details.

Inspection of sequence operation

- Refer to " ⑤ Inspection of sequence operation" of ADJUSTMENT Separate Volume ② for details.

Inspection of sequence error

- Refer to " ⑥ Inspection of sequence error" of ADJUSTMENT Separate Volume ② for details.

CPU version, number of release times

- Refer to " ⑦ CPU version, number of release times" of ADJUSTMENT Separate Volume ② for details.

Inspection of LCD light-up

- Refer to " ⑧ Inspection of LCD light-up" of ADJUSTMENT Separate Volume ② for details.

Reset of compensated AF defocus amount

- Refer to " ⑪ Reset of compensated AF defocus amount" of ADJUSTMENT Separate Volume ② for details.

Rewriting of offset value of AF adj. lens

- Refer to " ⑫ Rewriting of offset value of AF adj. lens" of ADJUSTMENT Separate Volume ② for details.

User ID:INC

⚠ WARNING

- There are high voltage parts inside. Be careful of this electric shock, when you remove the cover.
- You must discharge the main condenser according to the instruction of this repair manual after you remove the cover.

- Discharge the main condenser.
- Take out the screws (#631 and #623).

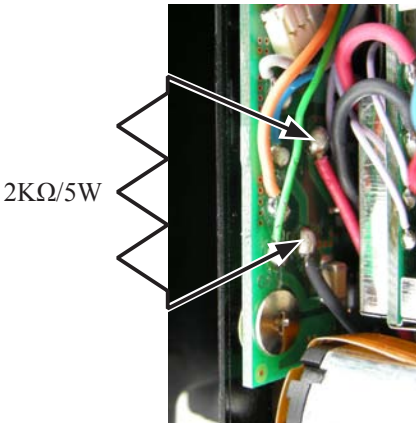

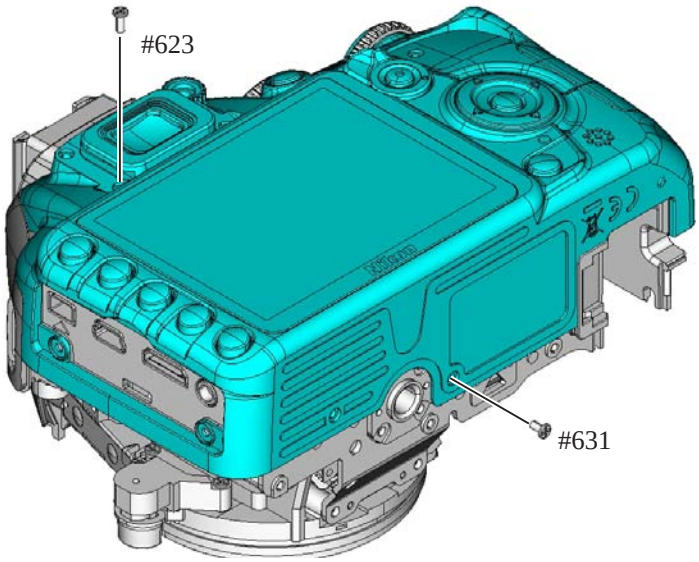

- Lift the rear cover unit, and disconnect the FPC.
- Remove the rear cover unit.

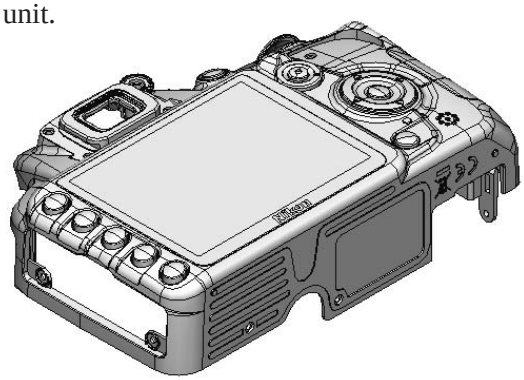

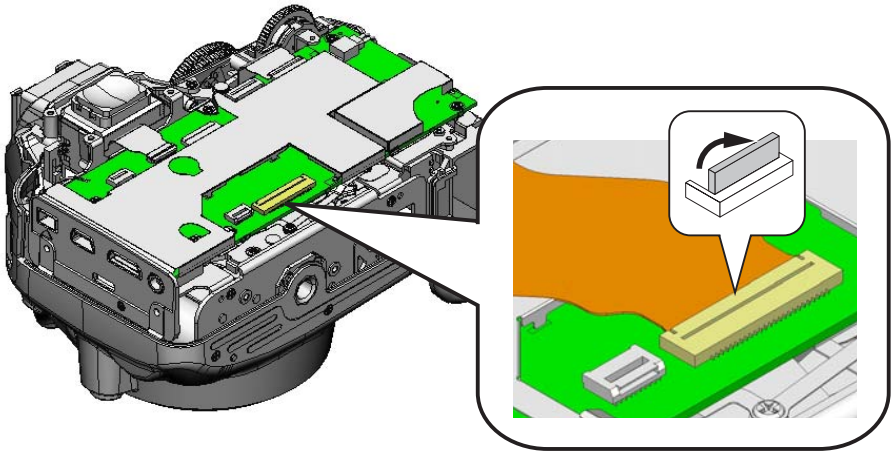

User ID:INC

Front cover unit

- Attach the spring (#160) to the front cover (#24).
- Tighten the two screws (#646).
- Attach the button (#465).

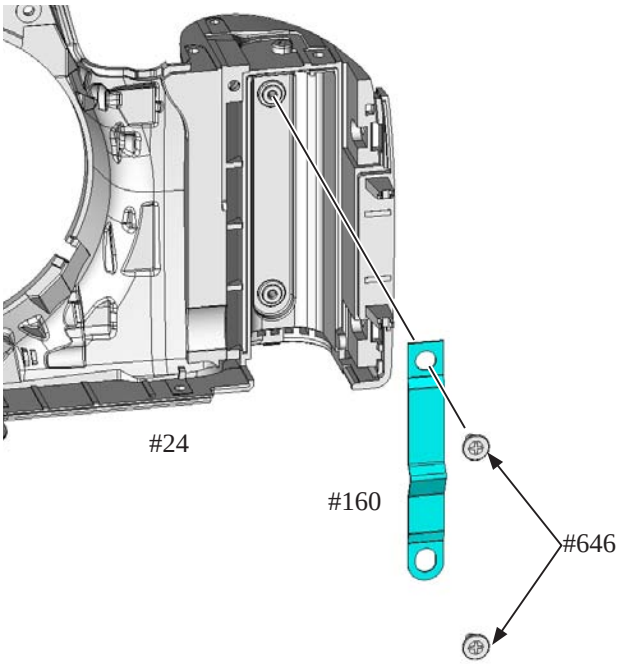

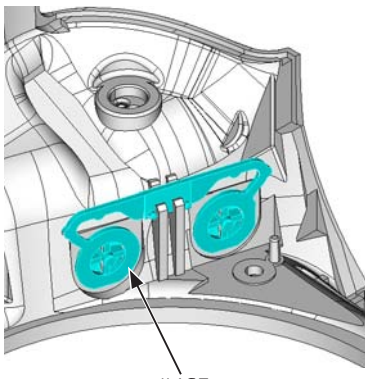

- Mount the front cover unit, while lifting the tripod base section.

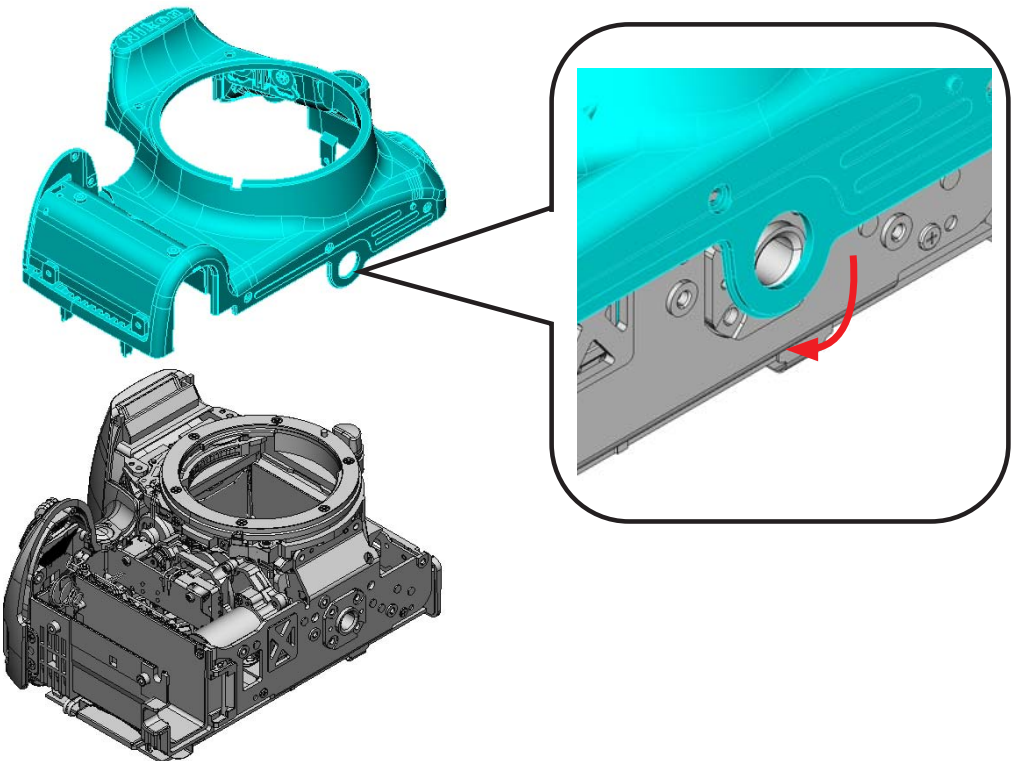

User ID:INC

- Tighten the two screws (#634) and one screw (#643).
- Tighten the three screws (#631).
- Tighten the two screws (#644) and one screw (#639).

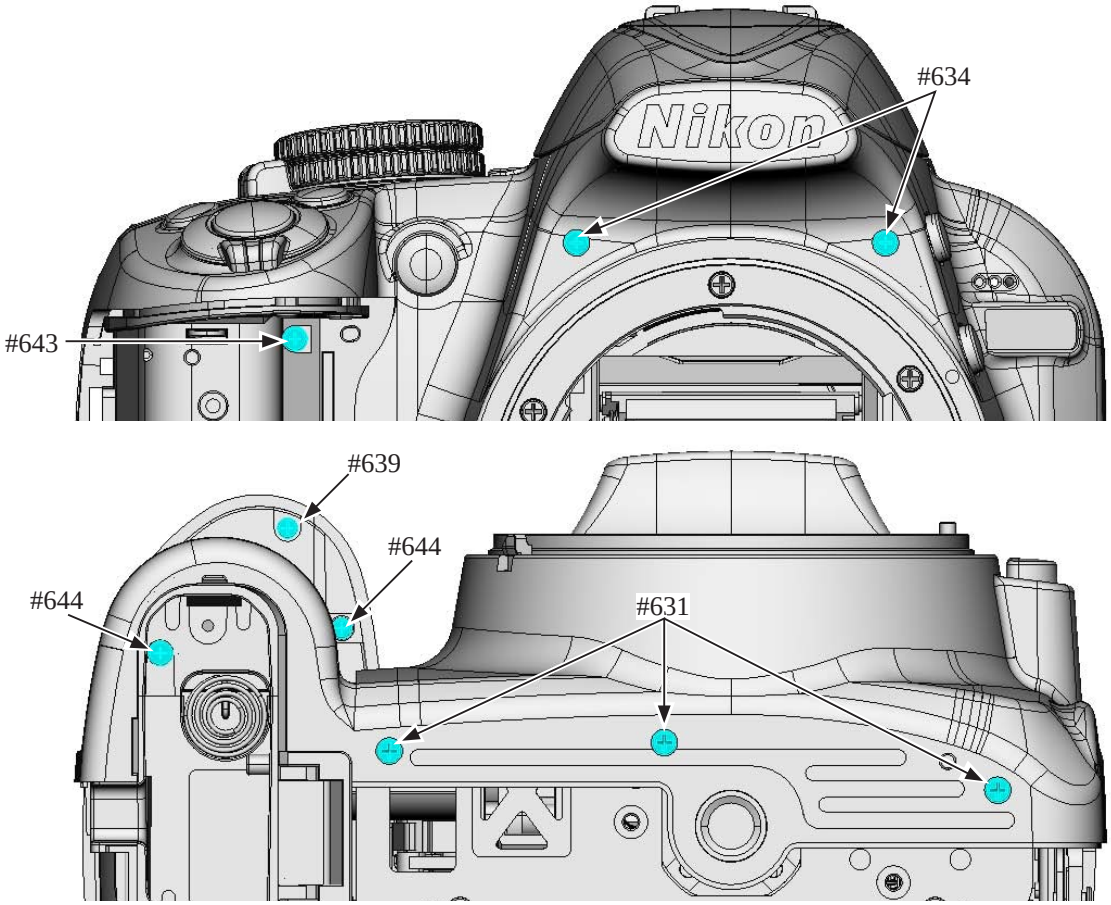

User ID:INC

Rear cover unit

- Connect the FPC.
- Turn the diopter adj. knob all the way to the right, and mount the rear cover unit.

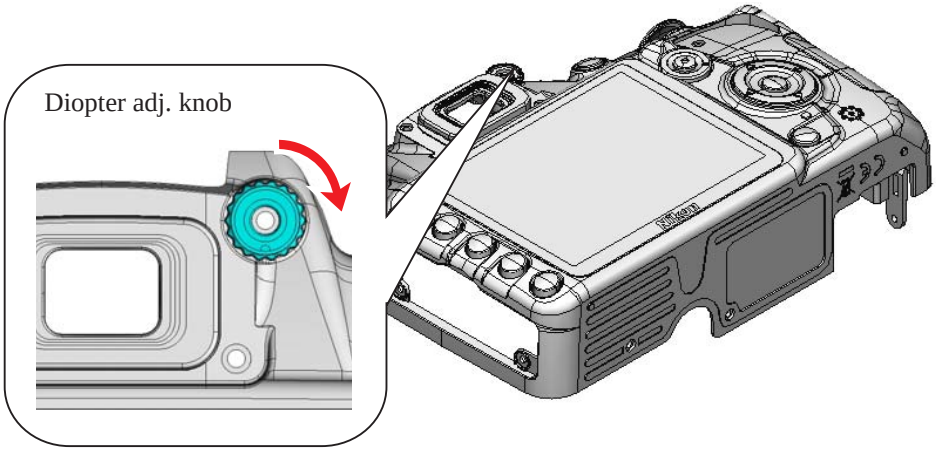

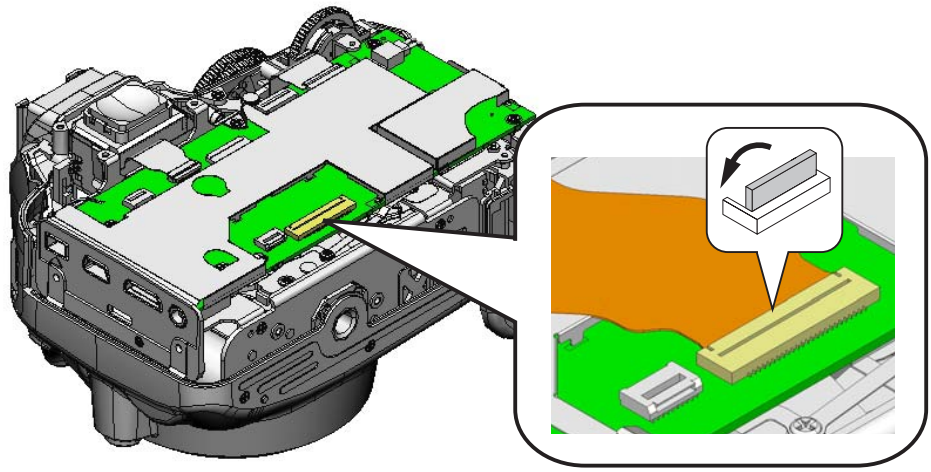

- Tighten the screw (#622).
- Attach the double-stick tape (#411) and rubber (#410).

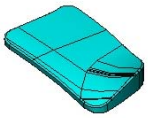

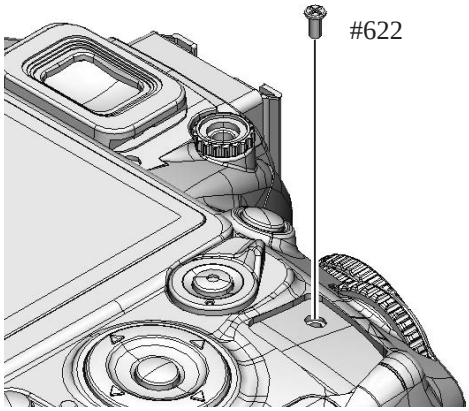

User ID:INC

- Tighten the screw (#634).
- Tighten the two screws (#623).
- Tighten the screw (#614).
- Attach the cover (#267).

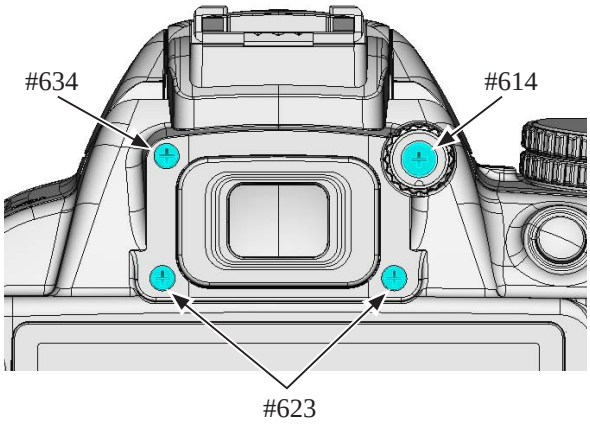

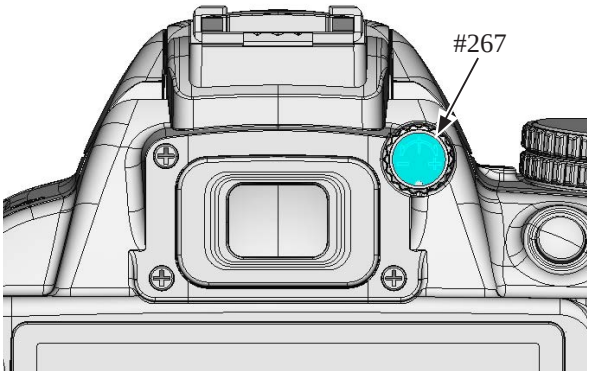

- Tighten the two screws (#631).

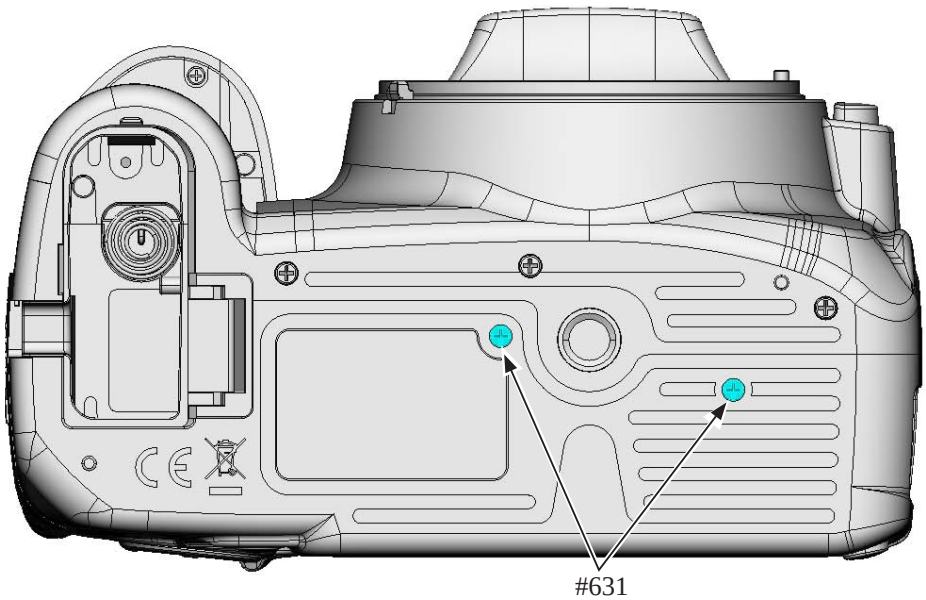

User ID:INC

- Tighten the two screws (#640).
- Tighten the two screws (#623).

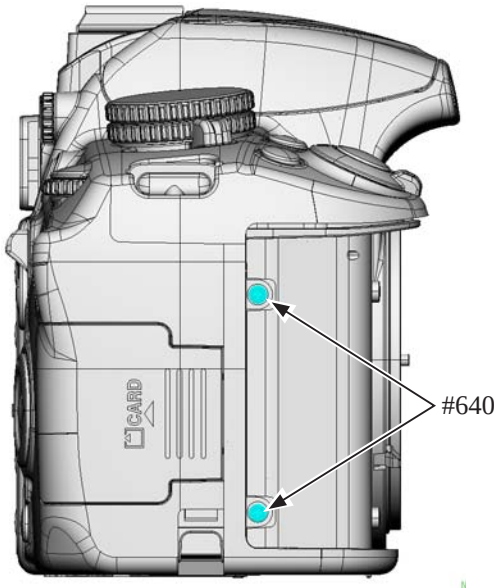

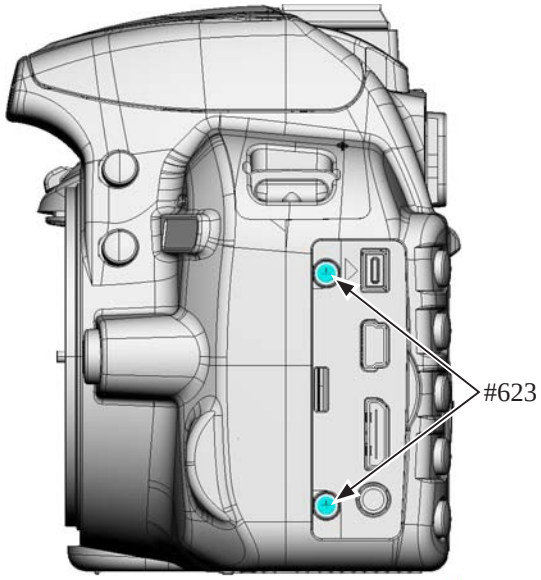

- Mount the grip unit (#B26). (Do NOT reuse the grip unit that was once removed.)
- Attach the grip cover (#27).
- Tighten the screw (#661).

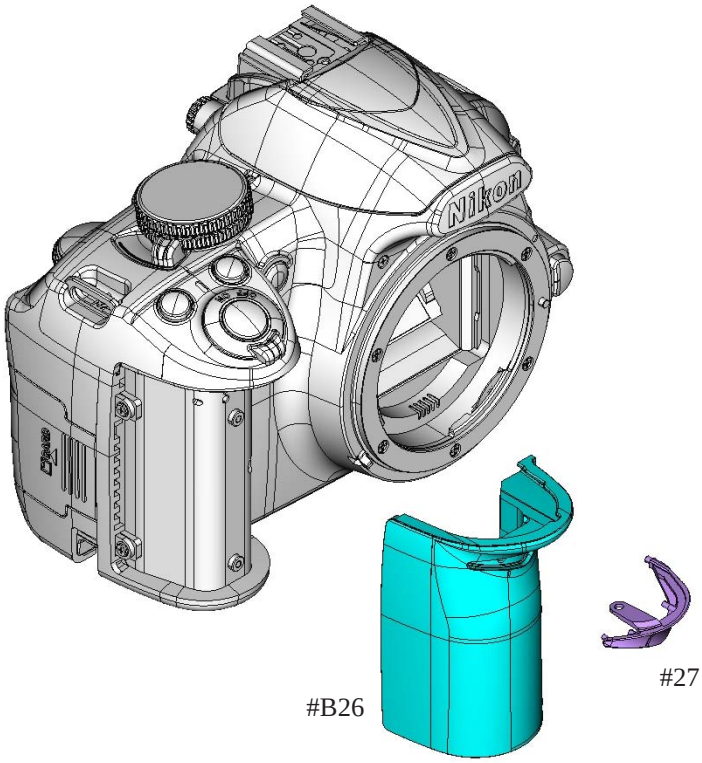

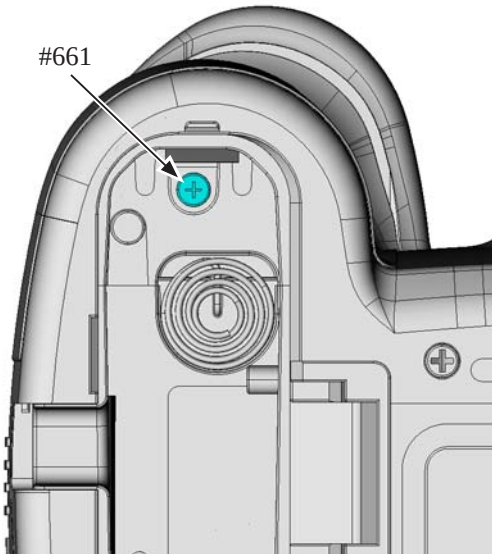

User ID:INC

- Attach the power connector cover (#72).
- Mount the IF cover (#71).

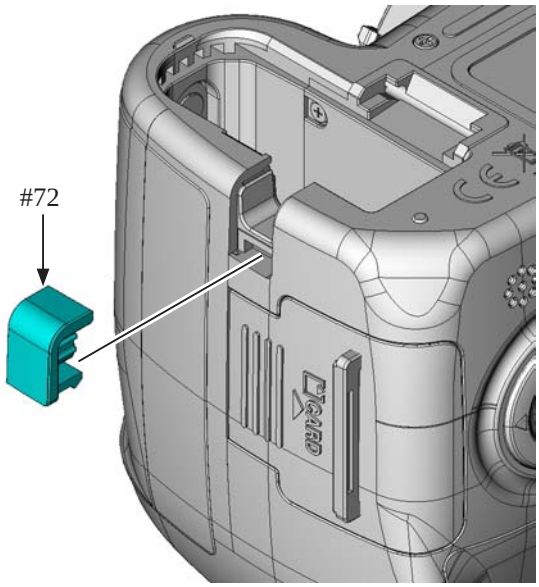

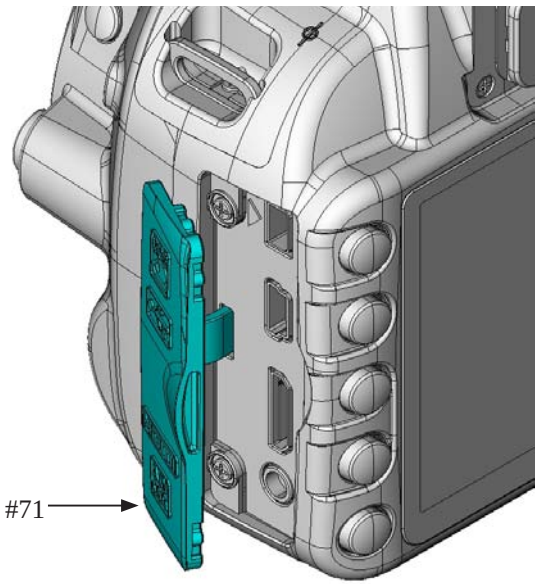

- Mount the battery cover unit (#B151).

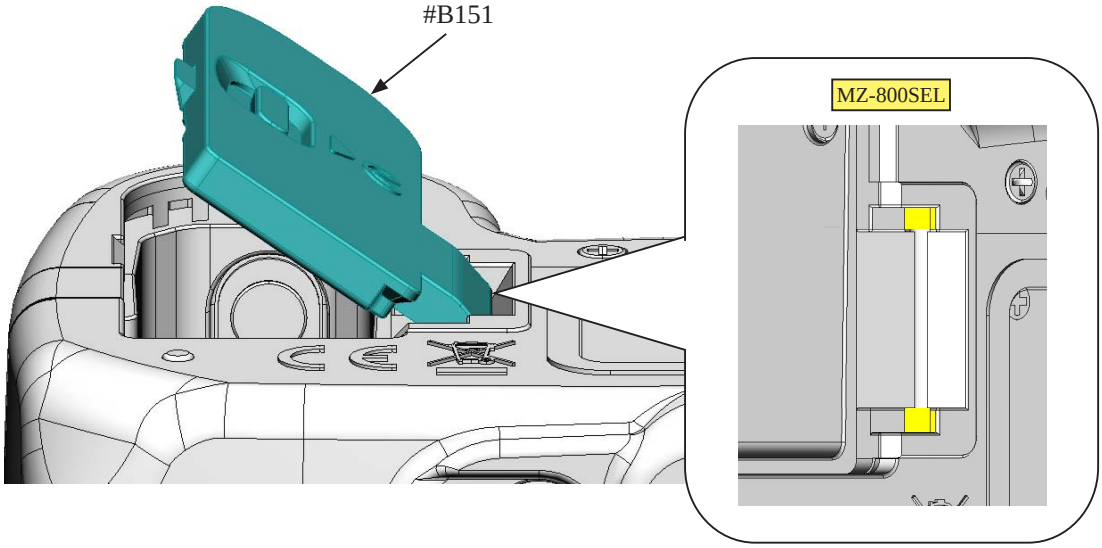

User ID:INC

Measurement of consumption current value

- Refer to "Measurement of consumption current value" of ADJUSTMENT Separate Volume ① for details.

Standard:

Main SW/OFF (NOT any button pressed)	**200µA or less**
Main SW/ON (Half-release timer: OFF)	**190µA or less**
Main SW/ON (Half-release timer: ON)	**250mA or less**
Main SW/ON (TFT monitor: Light up)	**280mA or less**
During LV (Live View)	**550mA or less**
During recording movies	**700mA or less**

Tool (Device)		
		Use Nikon product.
Power supply (10V 5A)	Digital meter	Converted power connector EP-5A

User ID:INC

Operation check of image sensor cleaning

- Refer to "Operation check of image sensor cleaning" of ADJUSTMENT Separate Volume ① for details.

Setting of oscilloscope
(In case of YOKOGAWA-made DL1540)

INPUT	DC
TRIGGER MODE	AUTO
TRIGGER LEVEL	4.0V
TRIGGER SOURCE	CH1
TRIGGER TYPE	EDGE
CH POSITION	-4.00div
CH COUPLING	DC
PROBE	1:1
FILTER(Bandwidth)	FULL
FILTER(Smooth)	ON
TIME/DIV	500ms/div
V/DIV	500mv/div
CH1 OFFSET	Adjust so that the wavy line is positioned in the center, and easily viewable.

Tool (Device)	
J61232 Current detector	Power supply (10 V 5 A)
3-output stabilized power supply	Oscilloscope
Power connector EP-5A	

Standard

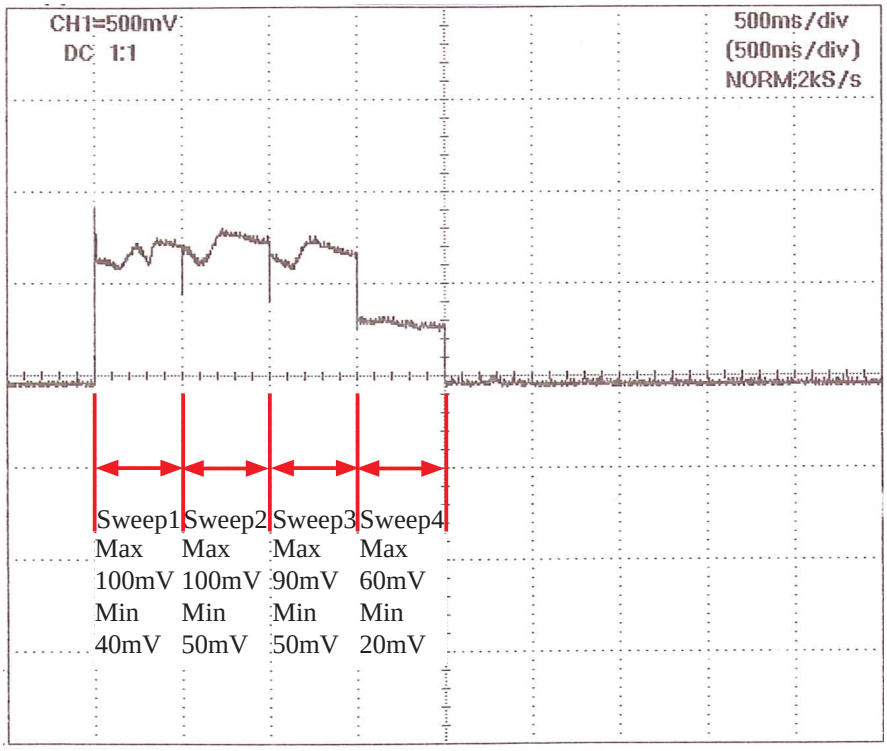

User ID:INC

Necessary inspection and adjustment of imaging when parts are replaced

(○: Necessary △: Inspection only)

	Image adjustment 1	Image adjustment 2	Image adjustment 3	Image adjustment 4	Image adjustment 5	Image adjustment 6	Image adjustment 7	Initial setting	Ver.No/ Ser.No	Image sensor cleaning insp. *
Shutter							○			
AF sensor unit										
SZ-DC/DC PCB unit										△
Prism box unit										
TOGO PCB unit	○	○	○	○	○	○	○	○	○	
Power drive PCB										△
Image sensor unit	○	○	○	○	○	○	○			△
LCD monitor unit										
License sheet									○	
SQ PCB unit							○			
MG PCB unit							○			
Front body unit							○			

＊ In other cases than replacements of the parts, if users point out the problems, perform the image sensor cleaning operations/inspections.

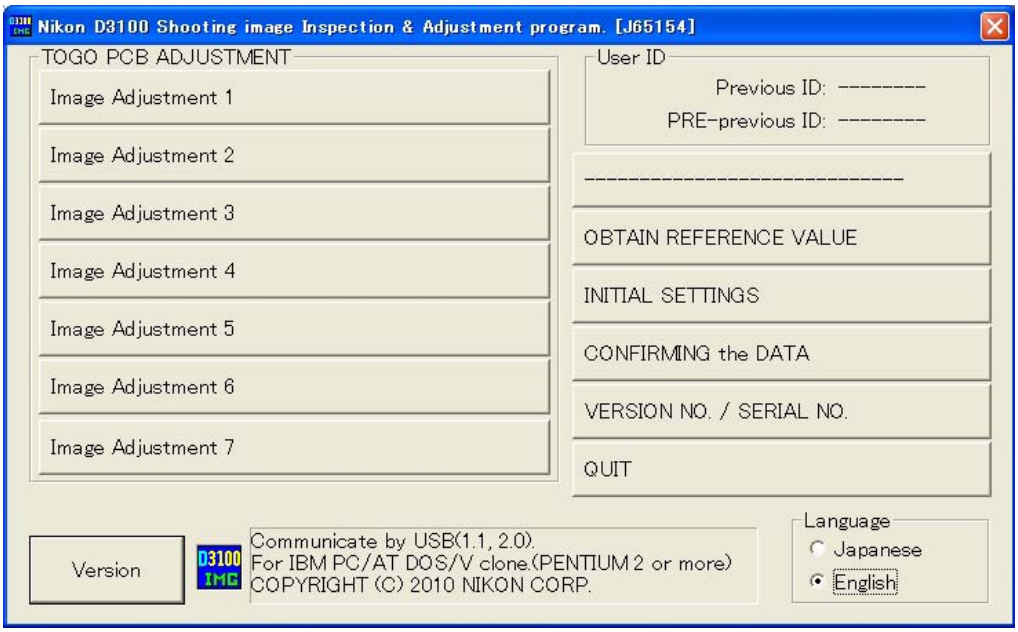

User ID:INC

Image adjustment 1

- Adjustment item: Offset adjustment
- Refer to "Offset adjustment" of " ① Imaging adjustment" of ADJUSTMENT Separate Volume ③ for details.

  G-Level output target value: 130 LSB

  Standard: 125-135 LSB

Tool (Device)				
J61185 Imaging adj. tool lens	J63070 Color viewer	J63085 Filter SP1	J63086 Filter SP2	J63087 Filter SP3
J18191 ND filter 8× （Use 2 filters.）				

Image adjustment 2

- Adjustment item: Gr/Gb compensation adjustment (R/B filter)/Line crawl adjustment
- Refer to "Gr/Gb compensation adjustment (R/B filter)/Line crawl adjustment" of " ① Imaging adjustment" of ADJUSTMENT Separate Volume ③ for details.

Tool (Device)				
J61185 Imaging adj. tool lens	J63070 Color viewer	J63085 Filter SP1	J63086 Filter SP2	J63087 Filter SP3
J63068 LUMINANCE METER BM-3000				

User ID:INC

Image adjustment 3

- Adjustment item: Sensitivity adjustment/Sensitivity ratio adjustment/Shading adjustment
- Refer to "Sensitivity adjustment/Sensitivity ratio adjustment/Shading adjustment" of " ① Imaging adjustment" of ADJUSTMENT Separate Volume ③ for details.

Tool (Device)			
J63070	J18191	J61185	J63068
Color viewer	ND filter 8×	Imaging adj. tool lens	LUMINANCE METER BM-3000

Image adjustment 4

- Adjustment item: Sensitivity ratio adjustment
- Refer to "Sensitivity ratio adjustment" of " ① Imaging adjustment" of ADJUSTMENT Separate Volume ③ for details.

Tool (Device)			
J19123	RJ is unavailable.	J61185	J63068
EF-1	EF-8000	Imaging adj. tool lens	LUMINANCE METER BM-3000
Shutter tester			

Image adjustment 5

- Adjustment item: Color adjustment
- Refer to "Color adjustment" of " ① Imaging adjustment" of ADJUSTMENT Separate Volume ③ for details.

Tool (Device)			
J11374	J61244	J63112	J63113
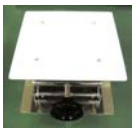			
Jack 200×200 mm	D3100 color adj. body	Color adjusting device	SG chart
J18498	J63066	J63114	
		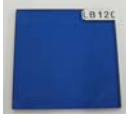	
Lens AF 28/2.8D	D1 Filter holder	Filter LB120	

User ID:INC

Image adjustment 6

- Adjustment item: Pixel defect compensation collectively
- Refer to "Pixel defect compensation collectively" of " ① Imaging adjustment" of ADJUSTMENT Separate Volume ③ for details.

Tool (Device)			
J63070	J18191	J61185	J63068
Color viewer	ND filter 8×	Imaging adj. tool lens	LUMINANCE METER BM-3000

Image adjustment 7

- Adjustment item: Inspection and adjustment of shutter via shot image/Inspection of saturation value
- Refer to "Inspection and adjustment of shutter via shot image/Inspection of saturation value" of " ① Imaging adjustment" of ADJUSTMENT Separate Volume ③ for details.

Tool (Device)			
J19123	RJ is unavailable.	J61185	J63068
EF-1	EF-8000	Imaging adj. tool lens	LUMINANCE METER BM-3000
Shutter tester			

User ID:INC

Obtaining of reference value

- Reference value to be obtained for: Sensitivity and Sensitivity ratio/Sensitivity ratio/color adjustment
- Refer to " ④ Obtaining of reference value" of ADJUSTMENT Separate Volume ③ for details.

Tool (Device)				
J61241	J61244	J63112	J63113	
Tool body (Imaging reference body)	D3100 color adj. body	Color adjusting device	SG chart	
J18498	J63066	J63114 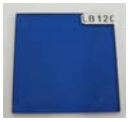	J11374 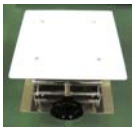	J63068
Lens AF 28/2.8D	D1 Filter holder	Filter LB120	Jack 200×200 mm	LUMINANCE METER BM-3000
J19123	RJ is unavailable.	J63070	J18191	J61185
EF-1	EF-8000	Color viewer	ND filter 8×	Imaging adj. tool lens
Shutter tester				

Factory default setting

- Refer to " ⑤ Factory default setting" of ADJUSTMENT Separate Volume ③ for details.

Confirmation of data

- Refer to " ⑥ Confirmation of data" of ADJUSTMENT Separate Volume ③ for details.

Version no. /Serial no.

- Refer to " ⑦ Version number/Serial number" of ADJUSTMENT Separate Volume ③ for details.

User ID:INC

Wiring

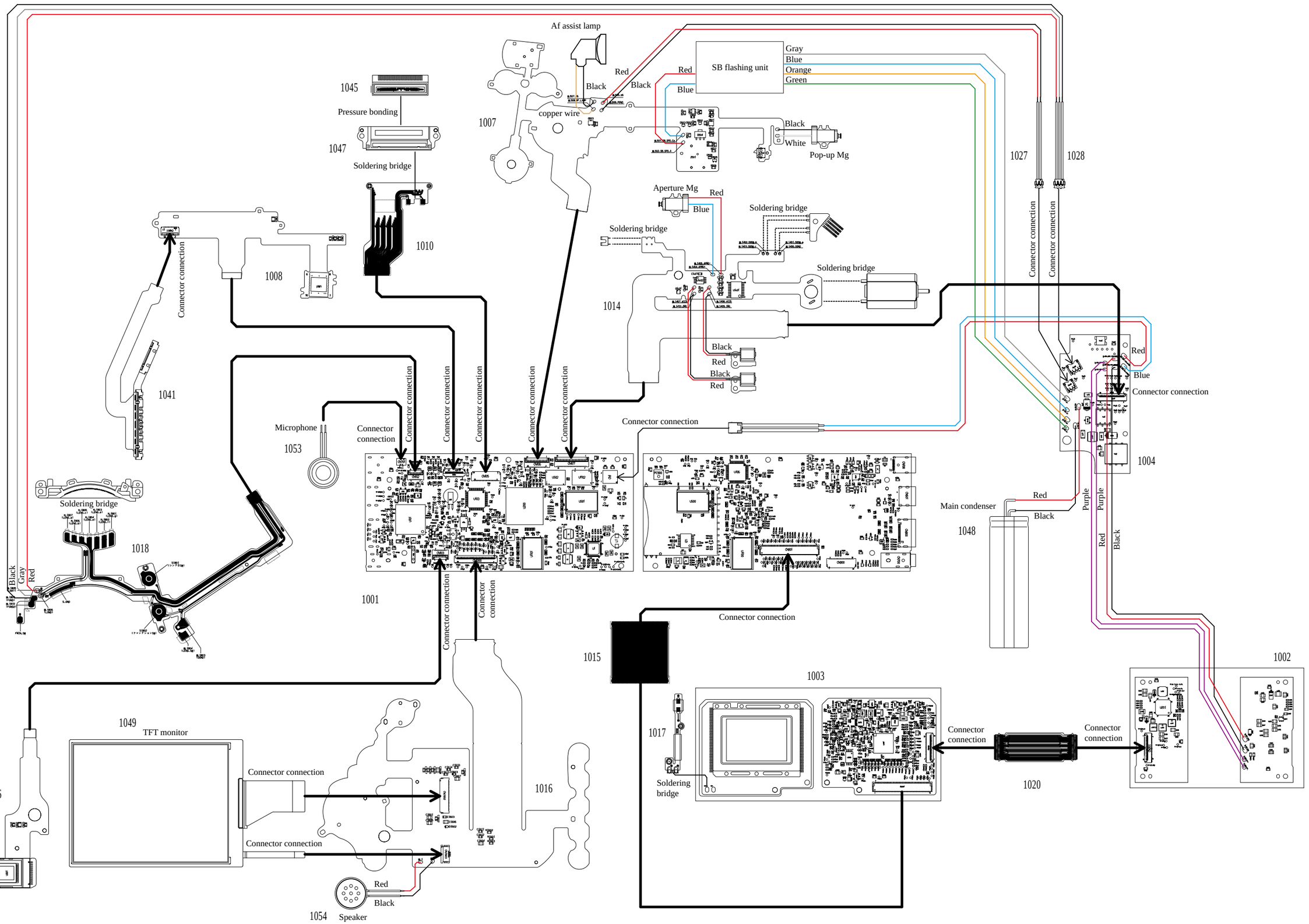

User ID:INC

Mounting Drawing

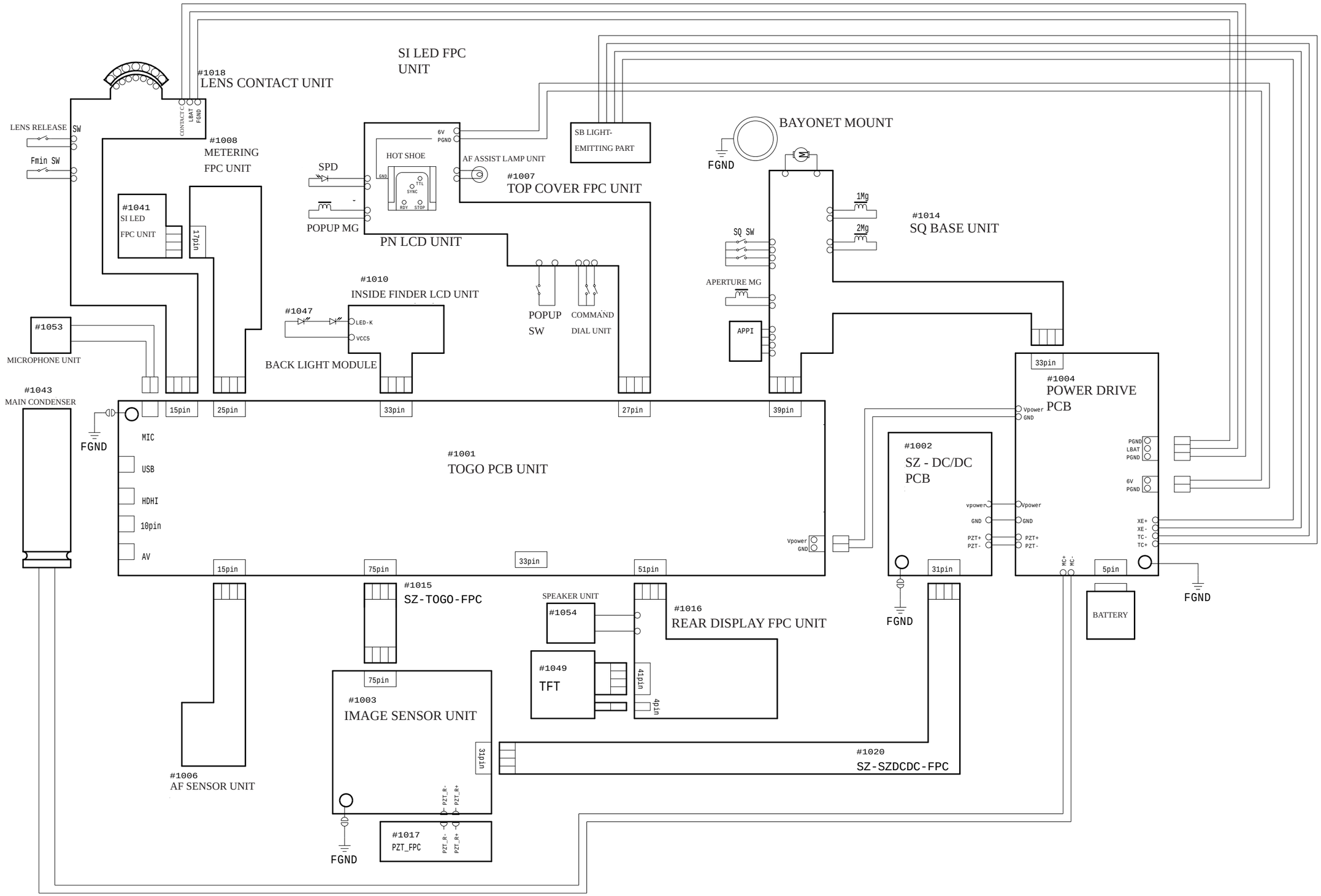

User ID:INC

FUSE arrangement

PowerDRV PCB (Surf face)

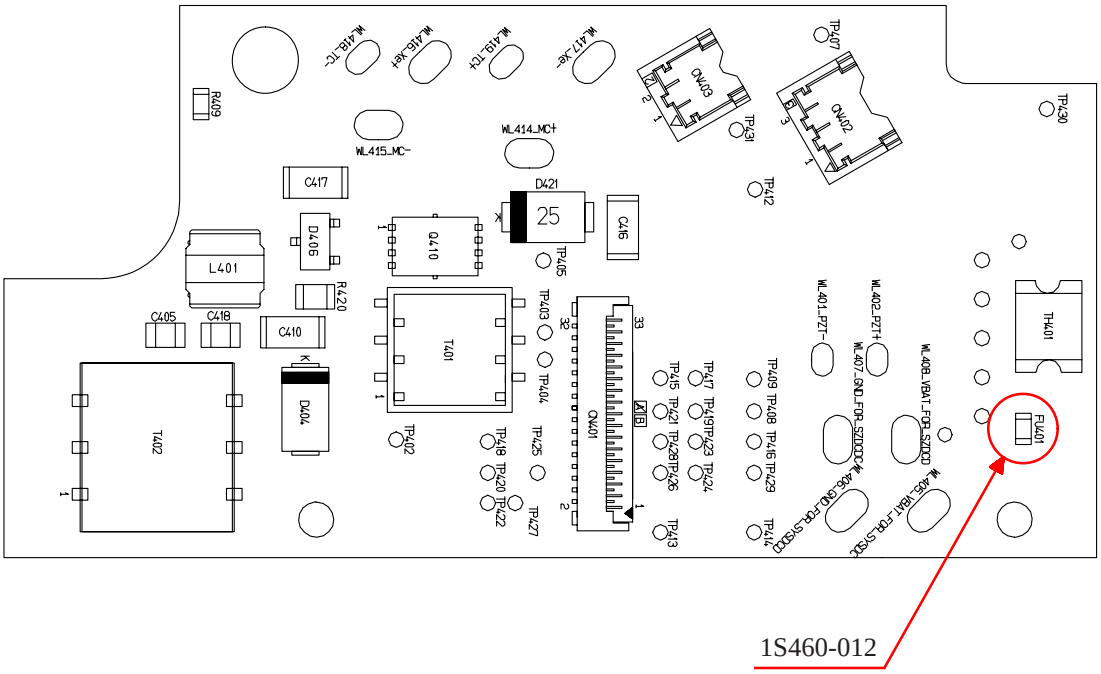

Phenomenon when FUSE has blown out
The power is not turned on.

Inspection standards

Items	Judgment standard	Remarks
External view		
Step (height in difference)	Top cover & apron, Top cover & rear cover: 0.2 mm or less IF cover & cover : 0.2 mm or less Other parts than the above: 0.3 mm or less Moving parts: 0.5 mm or less	Visual check Digital micrometer
Gap	Top cover & Apron, Top cover & rear cover: 0.2 mm or less SB case & Top cover; SB case & Apron (when built-in flash unit is housed) : 0.5 mm or less Other parts than the above: 0.3 mm or less Moving parts: 0.5 mm or less	Visual check Thickness gauge
Size / Force		
Shutter release button	Protrusion: 1.23 ± 0.2 mm Halfway-pressing force: 0.98 ± 0.49 N (100 ± 50gf) Halfway-pressing stroke: 0.5 ± 0.2 mm Releasing force: 2.55 ± 0.69 N (260 ± 70gf) Releasing stroke: 0.7 ± 0.25 mm Full pressing stroke: 0.25 ± 0.1 mm from pressing halfway Difference btwn half-pressing and releasing force: 0.5N or more (51 gf/gram-force or more)	Digital micrometer Tension gauge
Aperture lever	3.4 height: 3.3 - 3.6 mm	3.4 height gauge Collimator
Main mirror	45° angle: Up-down ± 10' Right-left ± 30' Distortion: 8' or less Gap of up-mirror in mirror box: None	Main mirror tool Visual check Feeling in hand
Sub-mirror	51° up-down angle: Up-down 0 ± 20' Distortion: 8’ or less	Sub-mirror tool
∞ Infinity focus	± 100µm	Collimator ∞ Focus lens

User ID:INC

Items	Judgment standard	Remarks
AF accuracy	Yaw Center: ±4 mrad (range fm -4 to +4 mrad) Others: ±12 mrad (range fm -12 to +12 mrad) Pitch Center: ±5 mrad (range fm -5 to +5 mrad) Others: ±11 mrad (range fm -11 to +11 mrad) Def amount Vertical-horizontal difference (center): 0 ± 45 µm AF defocus (focus position): Range fm -45 to +25 µm	PC Special tool Luminance (light source) box
AF-assist illuminator Lighting level	Range fm EV5.2 to 6.2	AF-S 18-55/3.5-5.6G VR Luminance (light source) box
Shutter accuracy		
Speed accuracy	Speed at more than 1/2000: ± 0.55 EV "1/2000" sec: ± 0.35EV From "(1/2000)" to 30 sec.: ± 0.25EV	Shutter speed tester
Variation	From "1/4000" to "(1/2000)" sec : 0.4EV or less From "1/2000" to "(1/1000)" sec : 0.3EV or less From "1/1000" to "30" sec.: 0.25 EV or less	
Shutter curtain speed	Both front and rear curtains (up-down 16.4 mm or less): approx. 3.7 ms	
Shutter curtain bound	Black/white bound (within frame): None	
Synchronization	Time lag: Fm - 0.05 to 0.55 ms	
AE accuracy	1/500 sec. (EV15, F8): ± 0.65EV 1/125 sec. (EV12, F5.6): ± 0.5EV 1/8 sec. (EV6, F2.8): ± 0.5EV	AF50/1.4D ISO100 Shutter tester
Variation	0.3EV or less	
AE mode difference	0.6EV or less	
Metering mode difference	0.5EV or less	
Variation in continuous shooting	0.5EV or less	

User ID:INC

Items	Judgment standard	Remarks
Viewfinder Parallax (Difference in center from the shot image/ sensor)	Up-down: 0.5 mm or less Right-left: 0.5 mm or less	AF50/1.8D, F5.6; looking through viewfinder, make a mark of 4 corners of finder's field of view (FOV) on a paper and shoot pic. Measure a difference in center btwn the actual screen and the marked paper.
Finder field frame	Lens vignetting/distortion: No noticeable vignetting/distortion found	Visual check
	Tilt: (right-left tilt relative to the bottom of finder field frame): 90°± 30'	With 0.2mm-or-less deviation of optical axis (from finder eyepiece optical axis), shoot based on the finder field frame, and measure the angle/tilt .
	Relative angle to image sensor : 0.5° or less	AF50/1.8D, F5.6; align the bottom line of the finder's FOV with the chart line and shoot pic.; measure a tilt of the chart line of the pic.
Field of viewfinder (frame coverage)	In height and width: Range fm "95%-2%" to "95%+3%"	AF50/1.8D, F5.6; check the actual pic. with 3m-distance from object of shooting.
Eye point	"-1m^{-1}" corresponding position: 18.0 mm ± 10%	Vernier caliper Eye point tool
LCD indication position in viewfinder	Right-left position: No noticeable misalignment Tilt: Range fm - 1° to + 1°	Visual check
Idle/consumption current	Main SW / OFF(Do NOT press any operational buttons.): 200 μA or less Main SW / ON (Half-release timer: OFF): 190 μA or less Main SW / ON (Half-release timer: ON): 250 mA or less Main SW / ON (TFT monitor ON): 280 mA or less During LV (Live View): 550mA or less During recording movie: 700mA or less	Power Source: 7.8V +0.3Ω Luminance: EV12 Lens: AF-S 18-55/3.5-5.6G Measure by digital multi-meter. Exclude current for charging secondary rechargeable battery (full charging: 2 days)
Operating time/ consumption current accumulated	Lens scanning Operating time: 1700ms or less Consumption current accumulated: 850mAsec or less Release without SD card Operating time: 200ms or less Consumption current accumulated: 350 mAsec or less	Power Source: 7.8V +0.3Ω Luminance: EV12 Lens: AF-S 18-55/3.5-5.6G Measure by digital multi-meter.

User ID:INC

<table>
<tr><th>Items</th><th colspan="3">Judgment standard</th><th>Remarks</th></tr>
<tr><td>Clock accuracy</td><td colspan="3">Difference par month: ± 90 seconds (20℃)</td><td>Wave clock</td></tr>
<tr><td>BC level</td><td colspan="3"><table>
<tr><td rowspan="2">1st level</td><td>To 2 level (Remaining charge decreased)</td><td>7410mV ± 100mV</td></tr>
<tr><td>Back to 1 (Remaining charge increased)</td><td>7610mV ± 100mV</td></tr>
<tr><td rowspan="2">2nd level</td><td>To 3 level (Remaining charge decreased)</td><td>7310mV ± 100mV</td></tr>
<tr><td>Back to 2 (Remaining charge increased)</td><td>7710mV ± 100mV</td></tr>
<tr><td rowspan="2">3rd level</td><td>To 4 level (Remaining charge decreased)</td><td>7120mV ± 100mV</td></tr>
<tr><td>Back to 3 (Remaining charge increased)</td><td>8120mV ± 100mV</td></tr>
<tr><td rowspan="2">4th level</td><td>To final level (Remaining charge decreased)</td><td>5150mV ± 100mV</td></tr>
<tr><td>Back to 4 (Remaining charge increased)</td><td>7000mV ± 100mV</td></tr>
</table></td><td>Check the level by digital multi-meter</td></tr>
<tr><td>Battery life</td><td colspan="3">CIPA standard
Room temperature:
550 frames or more
0℃ : 500 frames or more
・Setting: Factory default (Exposure mode: M, VR: OFF, others: default settings, shooting luminance face: LV12)
・Lens: AF-S VR 18-55/3.5-5.6G
・Temperature: 23℃ ±2℃ ・Humidity: 50％ ±20％
・Operation: Repeat the following at 30 sec. in one cycle. AF lens scanning cycled once → Repeat shooting of odd/even numbered shots → When the number of shots remaining becomes 0, format card → After 8 sec. of half-releasing timer passes, power OFF
<table>
<tr><th>Operation</th><th>Shots captured even number of times</th><th>Shots captured odd number ot times</th></tr>
<tr><td>Release shutter</td><td>WITHOUT firing built-in flash.</td><td>WITH firing built-in flash.
(M-flash/FULL setting)</td></tr>
<tr><td>Indications playedback on LCD monitor</td><td>4 seconds</td><td>4 seconds</td></tr>
</table>Caution) Assuming that the power SW becomes off every 10-frame release, perform ISC (Image Sensor Cleaning) operation.
(When the timer becomes OFF after "10×n " frame shooting, and when the timer becomes ON before "11×n" frame shooting, perform ISC operation each. n ≧ 1)

Professional mode
Room temperature:
2000 frames or more
0℃ : 1600 frames or more
・Setting: ISO 100, exposure mode: M, 1/250, F16, AF-C, operation mode: Continuous (shooting) mode: Continuous, VR: OFF, luminance face: LV12, image quality: BASIC, image size: M, white balance: A
・Lens: AF-S VR 18-55/3.5-5.6G
・Temperature: 20℃ , 0℃
・Operation: Repeat the following cycle:
Press halfway → Format card → Repeat the below □-framed instruction → When the number of shots remaining becomes 0, insert/remove card → Format card
Press halfway for 3 sec. → AF scanning cycled 3 times → Release shutter 6 times continuously →Playback on TFT for 4 sec. → Wait until half-release timer becomes OFF: 8 sec.
Caution) Assuming that the power SW becomes off every 10-frame release, perform ISC operation.</td></tr>
</table>

User ID:INC

<table>
<tr><th>Items</th><th>Judgment standard</th><th>Remarks</th></tr>
<tr><td></td><td>General mode
Room temperature:
400 frames or more
0℃ : 350 frames or more</td><td>・Setting: ISO100, exposure mode: M, 1/60 sec., F16, AF-S, Continuous (shooting) mode: Single, luminance face: LV12, image quality: NORM, image size: L, white balance: A, built-in flash fully firing
・Lens: AF-S VR 18-55/3.5-5.6G, Mode: S, VR: OFF
・Humidity: 20℃ , 0℃
・Operation: Repeat the following cycle.
Press halfway → Format card → Repeat shooting odd/even number of times → When the number of shots remaining becomes 0, insert/remove card → Format card
<table>
<tr><th>Operation</th><th>Shots captured even number of times</th><th>Shots captured odd number ot times</th></tr>
<tr><td>Press halfway</td><td>5 sec.</td><td>5 sec.</td></tr>
<tr><td>AF scan</td><td>Lens cycled from infinity to minimum range once</td><td>Lens cycled from infinity to minimum range once</td></tr>
<tr><td>Release shutter</td><td>WITHOUT firing built-in flash.</td><td>WITH fully firing built-in flash.
(M-flash/FULL setting)</td></tr>
<tr><td>Indications playedback on LCD monitor</td><td>4 sec.</td><td>4 sec.</td></tr>
<tr><td>Wait until half-release timer becomes OFF</td><td>8 sec.
WITHOUT flashing AF-assist illuminator.</td><td>8 sec.
WITH flashing AF-assist illuminator.</td></tr>
</table>
Turn the power SW off one minute every 10-frame release.
So if ISC works with the power SW, operate it based on this timing.</td></tr>
<tr><td>Battery life during LV</td><td>Room temperature:
90 mins. or more
0℃ : 60 mins. or more</td><td>・Setting: Factory default (Exposure mode:M, VR:OFF, others: default settings, shootig luminance face: LV12)
Chart: General object of shooting which is not strictly uniform nor too fine.
・Lens: AF-S VR 18-55/3.5-5.6G
・Operation: Repeat the following cycle.
AF lens scanning cycled once → Start LV (live view) → Wait 15 mins. → Stop LV → Wait 15 mins.
・Time taking LV and accumulated time are recorded in the specified EEPROM area.
・Temperature: 23℃ ±2℃・Humidity: 50%±20%</td></tr>
<tr><td>Battery life during movie</td><td>Room temperature:
75 mins. or more
0℃ : 50 mins. or more</td><td>・Setting: Factory default (Exposure mode:M, VR:OFF, others: default settings, shootig luminance face: LV12)
Chart: General object of shooting which is not strictly uniform nor too fine.
・Lens: AF-S VR 18-55/3.5-5.6G
・Operation: Repeat the following cycle.
AF lens scan cycled once → Start LV (live view) → Start recording movie→ Wait 5 mins.→ Stop recording movie → Stop LV → Playback → Delete → Wait 5 mins.
・Time taking movie and accumulated time are recorded in the specified EEPROM area.
・Temperature: 23℃ ±2℃・Humidity: 50% ±20%</td></tr>
</table>

User ID:INC

Items	Judgment standard	Remarks
Resolution	Take shots by matching the chart's vertical direction so that the horizontal width of the chart falls within picture angle. Adjust the speed so that brightness becomes 220 ± 5LSB (8bit) at white part around the center of chart. Horizontal resolution Vertical resolution 1700 TV lines or more	AFS28-70mm / F2.8D 50mm/F5.6 AE: M mode Image quality: JPEG FINE Image size: L ISO100 TV resolution chart
Defective pixel: White/hot pixel against dark background	Visual check and evaluate on the rear LCD and monitor.	Lens cap Shutter speed: 1/30 AE: M mode Image quality: RAW, Image size: L Temperature: 25 ± 2℃ , 40℃ ± 2℃ WB: Direct sunlight ISO100
Dust appearance	Compensate exposure so that the center of "460×460 pixel" image becomes 156-187LSB (8bit), compared to correct exposure. In zone II area in JPEG of "G shading" item, judge based on dust contrast, size, quantity, and distance between dusts. Allowable quantity: 10 dusts or less Size, maximum contrast: ・29 pixels or less, 7.5% or less ・21 pixels or less, 9% or less ・19 pixels or less, 11% or less Distance btwn dusts: 235 pixel or more separation 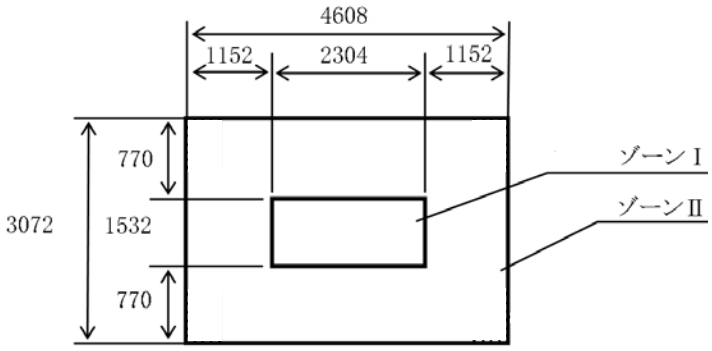 	AF105mm / F2.8D F16 AE: M mode Image quality: JPEG FINE WB: Preset ISO100

User ID:INC

Items	Judgment standard	Remarks
TFT unit Point defect	Hot (bright) pixels: 3 or less ("Red" and "Green": 0 in A area, 1 or less in B area) No 2 consecutive defective pixels found. Dead (black) pixels: 3 or less (1 or less in "A" section) No 2 consecutive defective pixels found. Total of hot and dead pixels: 3 or less (1 or less in "A" area)	
Uneveness of luminance (linear/point-like)	A/A' area No noticeable unevenness found	

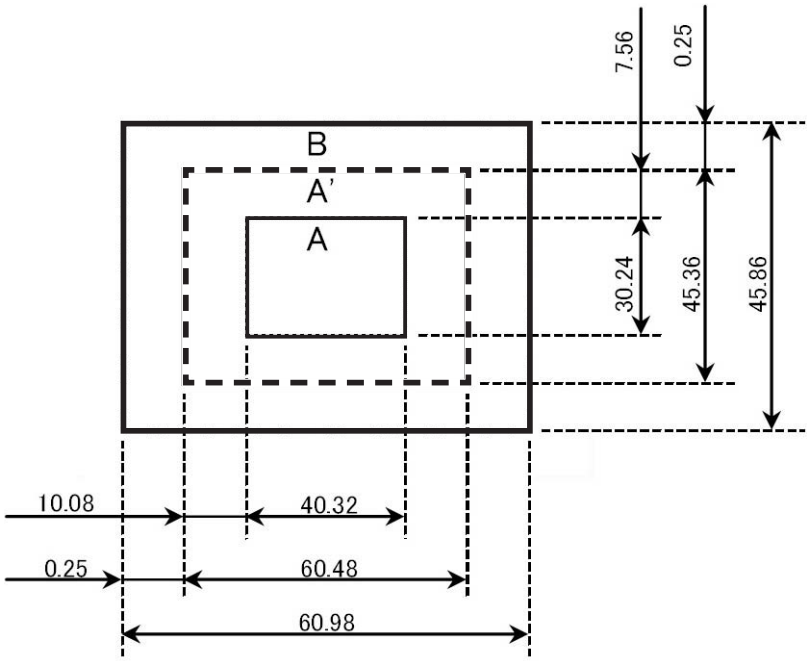

User ID:INC

工具一覧表　Tool list

新規工具 New tool	工具番号 Tool No.	RJランク RJ rank	名　称 Name of tool	備　考 Others
	CFD-409Z	A	サンコール　CFD－409Z SANKOL CFD-409Z	
	C-8008B	A	セメダイン　8008（黒） CEMEDINE 8008 (BLACK)	
★	MZ-310B	A	ドライサーフ MZ-310B DRYSURF MZ-310B	
★	RX4552	A	ハナール RX4552 HANARL RX4552	
	MZ-800SEL	A	ドライサーフ MZ-800SEL DRYSURF MZ-800SEL	
	NKS-401H	A	サンコール NKS-401H SANKOL NKS-401H	
	EDB0011	A	ネジロック（赤）1401C SCREWLOCK 1401C	
	EDC0021	A	アロンアルファ QUICK DRYING GLUE	
	LEN317A	A	グリース　LEN317A GREASE LEN317A	
		A	パーソナルコンピュータ PERSONAL COMPUTER	汎用品 USE MARKETED PRODUCT.
★	J65153	A	カメラ部調整用ソフト ADJ. SOFT FOR CAMERA BODY	
★	J65154	A	撮像部調整用ソフト ADJ. SOFT FOR IMAGING	

User ID:INC

新規工具 New tool	工具番号 Tool No.	RJランク RJ rank	名　称 Name of tool	備　考 Others
	J63070	A	カラービューア COLOR VIEWER	
	J19123 又は [OR] 廃盤 RJNo.is not available	A	シャッター試験機　EF-1（CE） SHUTTER TESTER EF-1 (CE) 又は [OR] シャッター試験機 EF-8000 SHUTTER TESTER EF-8000	京立電機製 KYORITSU ELECTRIC
	J19123E 又は [OR] J19042E	A	EF-1 用 APS 受光部 T.V. MEASURING ADAPTER (APS) (For EF-1) 又は [OR] T秒時測定アダプター（APS　EF8000 用） T.V. MEASURING ADAPTER (APS) (For EF8000)	京立電機製 KYORITSU ELECTRIC
	J63068	A/S	輝度計（BM－3000） LUMINANCE METER BM-3000	
		A	デジタルマルチメータ Digital meter	汎用品 USE MARKETED PRODUCT.
		A	安定化電源（10Ｖ　5Ａ） POWER SUPPLY (10V 5A)	汎用品 USE MARKETED PRODUCT.
	J18004	A	絞りレバー高さ点検工具 APERTURE LEVER POSITIONING GAUGE	
	J18004-1	S	J18004 用基準ゲージ REFERENCE GAUGE FOR J18004	

User ID:INC

新規工具 New tool	工具番号 Tool No.	RJランク RJ rank	名　称 Name of tool	備　考 Others
	J19132	A	メイン・サブミラー角度検査機 MAIN/SUB MIRROR ANGLE INSPECTION TOOL	
	J19132G	S	ミラー角度基準工具（原器） MIRROR ANGLE REFERENCE TOOL (of ACCURACY OBTAINED)	
	J19132D	A	54° 測定用ミラー 54°MEASUREMENT-USE MIRROR	FOR D3 D3X D700 D5000
★	J15442 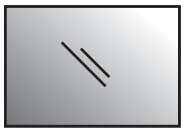	A	反射ミラー REFLECTION MIRROR	
		A	ヘクスキー（φ1.5mm） HEX. KEY WRENCH (φ1.5mm)	汎用品 USE MARKETED PRODUCT.
	J19004-1	A	インジケータ及びスタンド DIAL INDICATOR AND STAND	
	J18001-1	A	ボディバック出し工具 BODY-BACK FOCUS GAUGE	
★	J11388	A	フラットタイプ測定端子 FLAT-TYPE MEASURING TERMINAL	
	J19001	A	∞合致コリメーターF＝600mm INFINITY-FOCUS COLLIMATOR F=600mm	
★	J15441 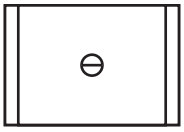	A	無限合致調整用スクリーン INFINITY FOCUS ADJUSTMENT SCREEN	
	J18010	A/S	無限大合致基準レンズ50／1.8 INFINITY STANDARD LENS 50/1.8	

User ID:INC

新規工具 New tool	工具番号 Tool No.	RJランク RJ rank	名　称 Name of tool	備　考 Others
	J15428 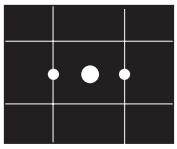	A	AE　CCD用チャートボード AE/CCD-USE CHART BOARD	FOR D80
		A	USBケーブルUC－E4 USB CABLE UC-E4	製品転用 USE NIKON PRODUT
	J15407 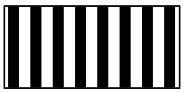	A	マルチカム 2000 AFチャート MULTI-CAM 2000 AF CHART	FOR D3 D3X D300 D700 D5000
	J15409 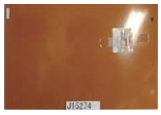	A	チャートボード CHART BOARD	
	J15264	A	RJ AF照明箱 （J15264 代用） TI-0304 5 RJ AF illuminator box (J15264) is disused. For substitutes refer to TIE03045.	払底品 OUT OF STOCK 代用工具 TI-03045 又は TIE-03045 参照 Substitute tool (ref. TIE-03045)
	J18191	A	NDフィルター8× ND FILTER 8x	3 枚使用 USE THREE FILTERS.
	J18266	A	AF調整用Zレンズ（1m用） ADJUSTMENT Z-LENS (FOR 1m)	
	J15259	A	AF調整工具台 AF ADJUSTING TOOL	
	J15280	A	Zレンズ用支持ホルダー LENS HOLDER	
	J18230	A	YAW・PITCH工具 YAW/PITCH ADJUSTMENT TOOL	

User ID:INC

新規工具 New tool	工具番号 Tool No.	RJランク RJ rank	名　称 Name of tool	備　考 Others
	J18267	A	AF50／1.4D LENS AF50/1.4D	
	J18498	A	AF28／2.8D LENS AF28/2.8D	
	J18499 又は [OR] 工具設定なし RJNo.is not available	A	AF-SVR 70- 300／4.5－5.6 LENS AF-SVR70-300/4.5-5.6 又は [OR] AF 70- 300／4－5.6D LENS AF70-300/4-5.6D	
	J19124 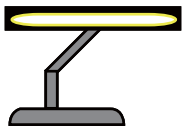	A	Zライト、または相当品×２ Z-light or equivalent x 2 ※フリッカレス（インバーター）蛍光灯器具 Z-light×2 ※ Equivalent fluorescent: Flicker-less “Inverter“ lighting.	
	J18393	A	斜めチャート SLANT CHART	
	J61185	A	撮像調整用工具レンズ IMAGING ADJ. TOOL LENS	
	J63085	A	フィルター　SP1 FILTER SP1	
	J63086	A	フィルター　SP2 FILTER SP2	

User ID:INC

新規工具 New tool	工具番号 Tool No.	RJランク RJ rank	名　称 Name of tool	備　考 Others
	J63087	A	フィルター　SP3 FILTER SP3	
★	J61241	C	D3100 工具ボディ（撮像用基準ボディ） D3100 TOOL BODY (FOR IMAGING)	
	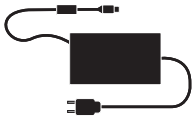	A	ACアダプター　EH－5 AC ADAPTER EH-5	製品転用 USE NIKON PRODUCT.
★		A	パワーコネクターEP－5A AC ADAPTER CONNECTOR EP-5A	製品転用 USE NIKON PRODUCT.
	J18360	A	基準反射布 Standard reflector 1.5M ×1.5M	
		A	フラッシュメーター Flash Meter	セコニック製 L-758D 推奨 （TI-07036 参照） SEKONIC-MADE L758D IS RECOMMENDED. (REF. TIE-07036)
		A	オシロスコープ OSCILLOSCOPE	汎用品 USE MARKETED PRODUCT.
		A	3 出力安定化電源 3-OUTPUT STABILIZED POWER SUPPLY	汎用品 USE MARKETED PRODUCT.
		A	電流検出治具 CURRENT DETECTOR	イメージセンサークリーニング機能搭載ボディ IMAGE SENSOR CLEANING FUNCTION BUILT-IN BODY
★	J61242	A	幕速調整用工具 CURTAIN SPEED ADJUSTER	
★	J61242A	A	交換用中継ボックス（幕速調整工具用） RELAY-BOX FOR SHUTTER-CURTAIN SPEED ADJUSTMENT TOOL	

User ID:INC

新規工具 New tool	工具番号 Tool No.	RJランク RJ rank	名　称 Name of tool	備　考 Others
★	J61242B	A	交換用幕速アダプター （幕速調整工具用） ADAPTER FOR SHUTTER-CURTAIN SPEED ADJUSTMENT TOOL	
★	J61242C	A	交換用接続クリップ（幕速調整工具用） CONNECTION-CLIP FOR SHUTTERCURTAIN SPEED ADJUSTMENT TOOL	
★	J61242D	A	交換用中継ケーブル（幕速調整工具用） RELAY-CABLE FOR SHUTTER-CURTAIN SPEED ADJUSTMENT TOOL	
★	J61242E	A	交換用中継 FPC（幕速調整工具用） RELAY-FPC FOR SHUTTER-CURTAIN SPEED ADJUSTMENT TOOL	
★	J 61245	A	幕速調整用ダミーボディ CURTAIN SPEED ADJ. DUMMY BODY	
★	J 61244	A	D3100 色調整ボディ COLOR ADJUSTMENT BODY FOR D3100	
	J11374 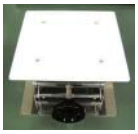	D	ジャッキ　200 × 200 mm JACK 200×200mm	
	J63114 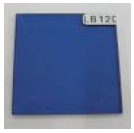	A	フィルターLB120 Filter LB120	
	J63066	A	D1用フィルターホルダー FILTER HOLDER FOR D1	
	J63113	A	SG チャート SG CHART	

User ID:INC

新規工具 New tool	工具番号 Tool No.	RJランク RJ rank	名　称 Name of tool	備　考 Others
	J63112	A	色調整装置 COLOR ADJUSTING DEVICE	付属のフードを使用 USE SUPPLIED HOOD.
★	J15443	A	2 ウェイ 水準器 2WAY LEVEL	
★	J15444	D	2 ウェイ ステージ 2WAY STAGE	
	J15420	A	トルクドライバー RTD15CN TORQUE DRIVER RTD15CN	
	J15421-1	A	トルクドライバー用ビット　V17 TORQUE DRIVER BIT V17	

User ID:INC

Screw sheet

VBA28001-R.3813.A

PARTS NAME	Rear cover unit								Front cover unit			
DISASSEMBLY	D3				D4			D5	D6			
TYPE OF SCREW	#614	#623	#634	#631	#661	#640	#623	#622	#644	#639	#631	#643
QUANTITY	1	2	1	2	1	2	2	1	2	1	3	1
ASSEMBLY	A68				A69			A67	A66			

PARTS NAME	Front cover unit		Top cover unit			Eyepiece		Retainer plate	LV lever	SB release PCB unit		SB upper cover
DISASSEMBLY	D6	D7	D8			D10		D11	D14	D15	D16	D17
TYPE OF SCREW	#634	#646	#631	#632	#656	#624	#621	#621	#619	#618	#617	#628
QUANTITY	2	2	1	1	1	2	1	9	2	1	3	2
ASSEMBLY	A66	A65	A57			A55		A54	A51	A49		A47

PARTS NAME	AF assist lamp unit	Top cover FPC unit	ON-OFF dial	Mode dial unit		Hot shoe	Prism box unit	LCD unit	IF holder	TOGO PCB unit	
DISASSEMBLY	D19	D20	D22	D23		D24	D25	D27	D29	D30	
TYPE OF SCREW	#629	#617	#615	#616	#663	#627	#613	#650	#633	#656	#607
QUANTITY	1	3	2	1	2	4	2	2	1	4	1
ASSEMBLY	A45	A44	A42	A41		A40	A35	A33	A36	A30	

PARTS NAME	Battery box unit					Shield plate unit			SZ-DC/DC PCB unit	Sub-frame	Bottom plate unit
DISASSEMBLY	D31		D32		D33	D35	D36		D36	D37	D38
TYPE OF SCREW	#638	#643	#658	#664	#651	#607	#635	#656	#656	#657	#647
QUANTITY	1	2	2	1	2	3	2	2	2	2	2
ASSEMBLY	A29		A28		A27	A25	A24		A23	A22	A20

User ID:INC

PARTS NAME	Bottom plate unit	Image sensor unit	Shutter PCB				MG PCB unit	SQ PCB unit	Bayonet mount		
DISASSEMBLY	D40	D41	D43		D44	D46	D47	D48	D49		D50
TYPE OF SCREW	#630	#634	#612	#604	#608	#619	#607	#602	#653	#654	#655
QUANTITY	4	3	3	1	1	1	2	4	5	1	1
ASSEMBLY	A18	A16	A13		A12	A10	A9	A7	A6		

PARTS NAME	F-min SW	Lens contact unit		AF sensor unit	Lens release button unit	Mirror unit					
DISASSEMBLY	D51	D51	D52	D53	D53	D54					
TYPE OF SCREW	#668	#650	#652	#162	#648	#662					
QUANTITY	1	2	1	3	2	2					
ASSEMBLY	A5	A4		A2	A2	A1					

PARTS NAME												
DISASSEMBLY												
TYPE OF SCREW												
QUANTITY												
ASSEMBLY												

PARTS NAME												
DISASSEMBLY												
TYPE OF SCREW												
QUANTITY												
ASSEMBLY												

User ID:INC