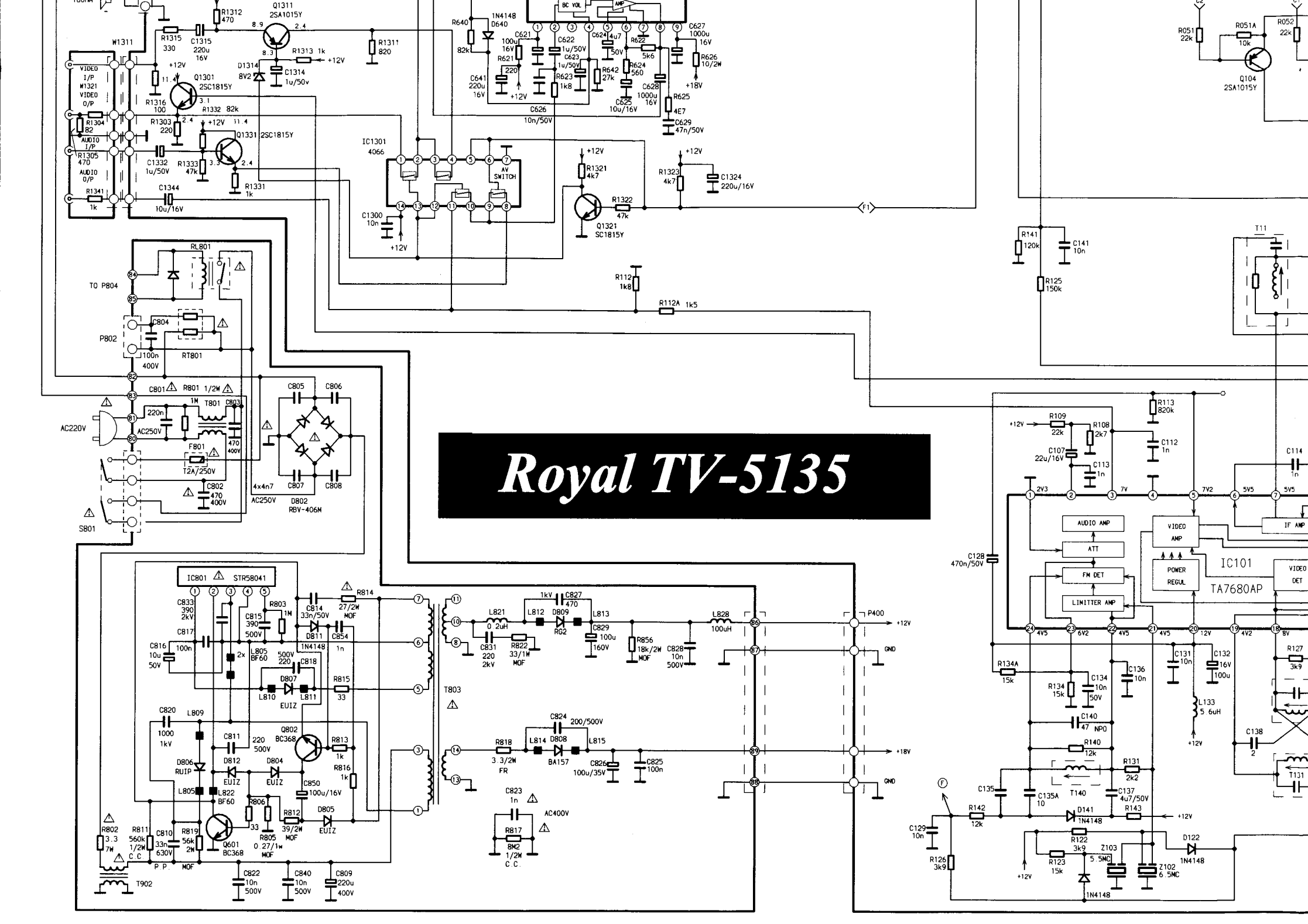
Royal TV-5135
W1311
VIDEO I/P W1321 VIDEO O/P
AUDIO I/P
AUDIO O/P
Q1311 2SA1015Y
Q1301 2SC1815Y
Q1331 2SC1815Y
IC1301 4066
AV SWITCH
Q1321 SC1815Y
BC VOL
AMP
Q104 2SA1015Y
RL801
TO P804
P802
RT801
AC220V
S801
F801 T2A/250V
D802 RBV-406M
IC801 STR58041
Q802 BC368
Q601 BC368
T803
T902
P400
GND
AC400V
T11
AUDIO AMP
ATT
FM DET
LIMITTER AMP
VIDEO AMP
POWER REGUL
IF AMP
VIDEO DET
IC101
TA7680AP
T140
T131
Z103 5.5MC
Z102 6.5MC

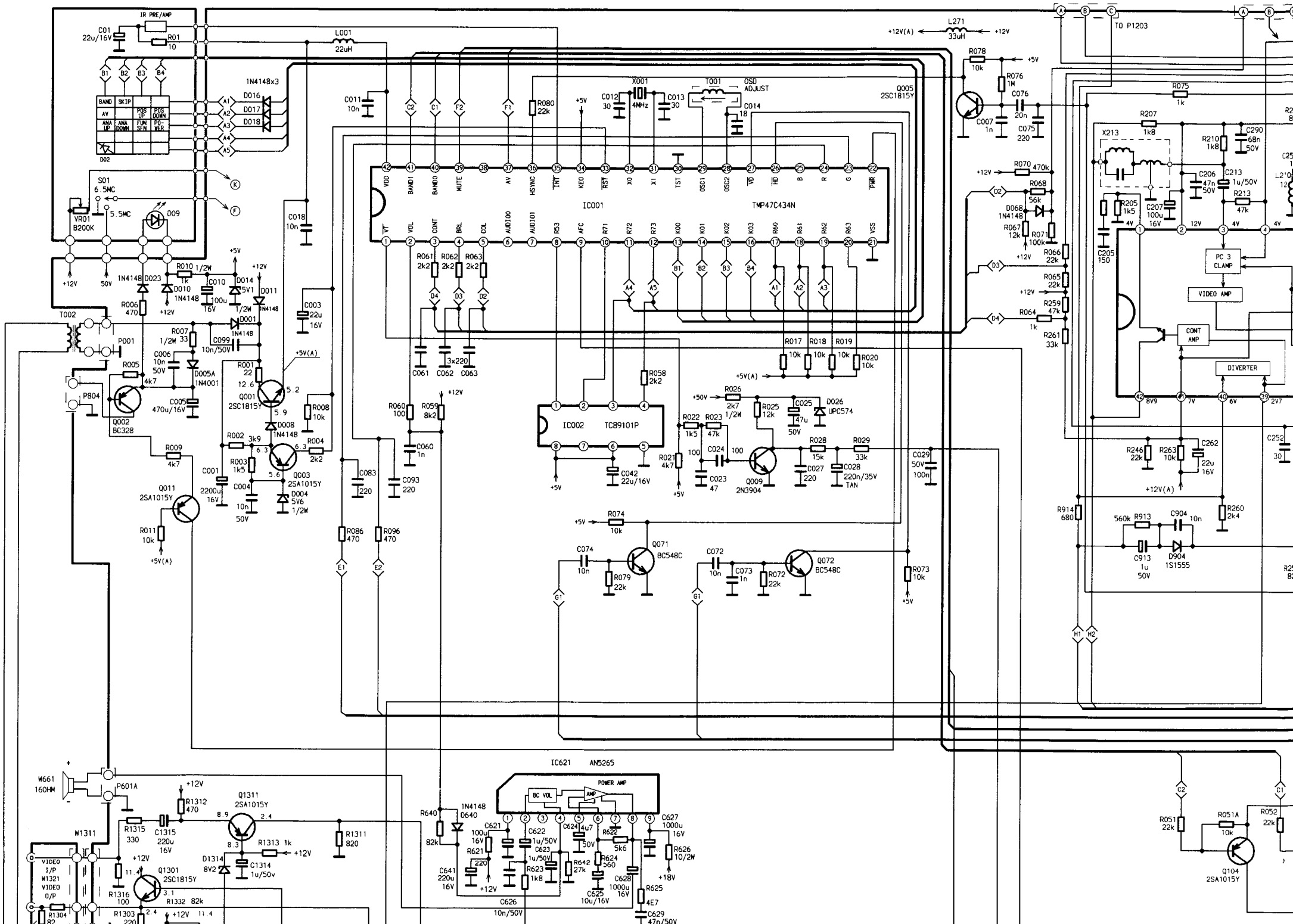
IR PRE/AMP
C01 22u/16V
R01 10
L001 22uH
B1 B2 B3 B4
BAND SKIP
AV POS UP POS DOWN
ANA UP ANA DOWN FUN SEN PO-WER
D02
1N4148x3
D016 D017 D018
A1 A2 A3 A4 A5
S01 6.5MC
5.5MC
VR01 B200K
D09
C011 10n
C018 10n
C2 C1 F2 F1
R080 22k
+5V
X001 4MHz
C012 30
C013 30
T001 OSD ADJUST
C014 18
Q005 2SC1815Y
IC001 TMP47C434N
VDD BAND1 BAND0 MUTE AV HSYNC INT KEO RST X0 X1 TST OSC1 OSC2 VD HS B R G PWR
VT VOL CONT BRL COL AUDIO0 AUDIO1 R53 AFC R71 R72 R73 K00 K01 K02 K03 R60 R61 R62 R63 VSS
R061 2k2 R062 2k2 R063 2k2
C061 C062 C063 3x220
R058 2k2
R059 8k2
R060 100
C060 1n
IC002 TC89101P
C042 22u/16V
R017 10k R018 10k R019 10k R020 10k
+5V(A)
R026 2k7 1/2W
R025 12k
C025 47u 50V
D026 UPC574
R022 1k5
R023 47k
R021 4k7
C024 100
C023 47
Q009 2N3904
R028 15k
R029 33k
C027 220
C028 220n/35V TAN
C029 50V 100n
R074 10k
Q071 BC548C
C074 10n
R079 22k
C072 10n
C073 1n
R072 22k
Q072 BC548C
R073 10k
G1
R078 10k
R076 1M
C076 20n
C007 1n
C075 220
L271 33uH
+12V(A)
+12V
TO P1203
R075 1k
R207 1k8
X213
R210 1k8
C290 68n 50V
C206 47n 50V
C213 1u/50V
R213 47k
C207 100u 16V
R205 1k5
C205 150
R070 470k
R068 56k
D068 1N4148
R067 12k
R071 100k
R066 22k
R065 22k
R259 47k
R064 1k
R261 33k
PC 3 CLAMP
VIDEO AMP
CONT AMP
DIVERTER
8V9 7V 6V 2V7
R246 22k
R263 10k
C262 22u 16V
R914 680
R913 560k
C904 10n
C913 1u 50V
D904 1S1555
R260 2k4
C252 30
T002
P001
P804
R005 4k7
Q002 BC328
R006 470
D023 1N4148
D010 1N4148
R010 1/2W 1k
C010 100u 16V
D014 5V1 1/2W
D011 1N4148
D001 1N4148
R007 1/2W 33
C099 10n/50V
C006 10n 50V
D005A 1N4001
C005 470u/16V
R001 22
Q001 2SC1815Y
D008 1N4148
R008 10k
R002 3k9
R003 1k5
R004 2k2
Q003 2SA1015Y
D004 5V6 1/2W
C001 2200u 16V
C004 10n 50V
C003 22u 16V
R009 4k7
Q011 2SA1015Y
R011 10k
C083 220
C093 220
R086 470
R096 470
E1 E2
W661 16OHM
P601A
W1311
VIDEO I/P
W1321
VIDEO O/P
R1304 82
R1312 470
Q1311 2SA1015Y
R1315 330
C1315 220u 16V
R1313 1k
R1311 820
D1314 8V2
C1314 1u/50v
Q1301 2SC1815Y
R1316 100
R1332 82k
R1303 220
IC621 AN5265
POWER AMP
BC VOL
AMP
R640 82k
1N4148 D640
C621 100u 16V
R621 220
C622 1u/50V
C623 1u/50V
R623 1k8
C624 4u7 50V
R642 27k
R622 5k6
R624 560
C625 10u/16V
C628 1000u 16V
R625 4E7
C629 47u/50V
C627 1000u 16V
R626 10/2W
+18V
C641 220u 16V
C626 10n/50V
R051 22k
R051A 10k
Q104 2SA1015Y
R052 22k

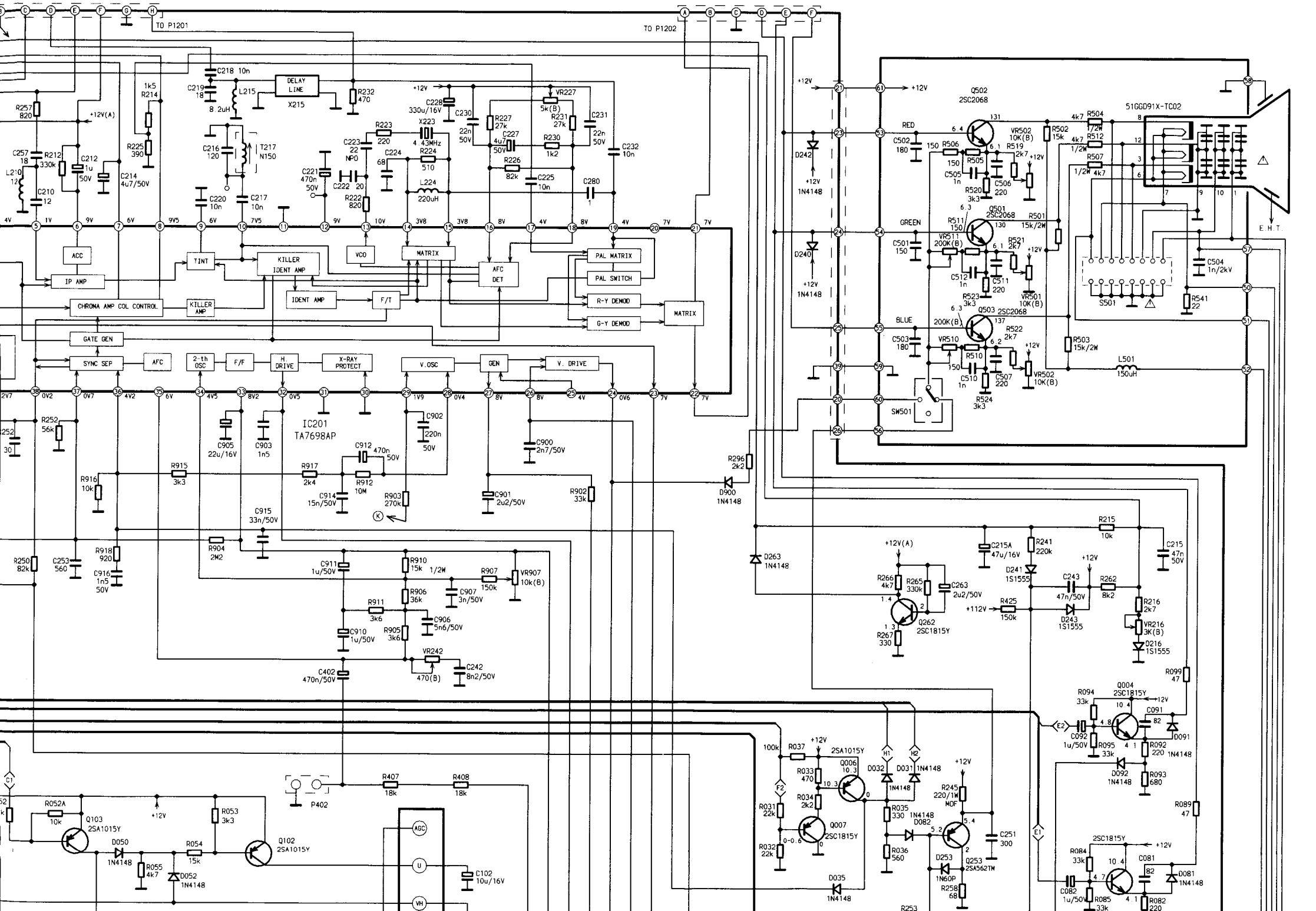
TO P1201
TO P1202
DELAY LINE
X215
IC201
TA7698AP
ACC
IP AMP
TINT
KILLER IDENT AMP
VCO
MATRIX
AFC DET
PAL MATRIX
PAL SWITCH
R-Y DEMOD
G-Y DEMOD
CHROMA AMP COL CONTROL
KILLER AMP
IDENT AMP
F/T
GATE GEN
SYNC SEP
AFC
2-th OSC
F/F
H. DRIVE
X-RAY PROTECT
V.OSC
GEN
V. DRIVE
51GGD91X-TC02
Q502 2SC2068
Q501 2SC2068
Q503 2SC2068
RED
GREEN
BLUE
S501
SW501
E.H.T.
Q262 2SC1815Y
Q004 2SC1815Y
Q006 2SA1015Y
Q007 2SC1815Y
Q253 2SA562TM
Q103 2SA1015Y
Q102 2SA1015Y
P402
AGC
U
VH

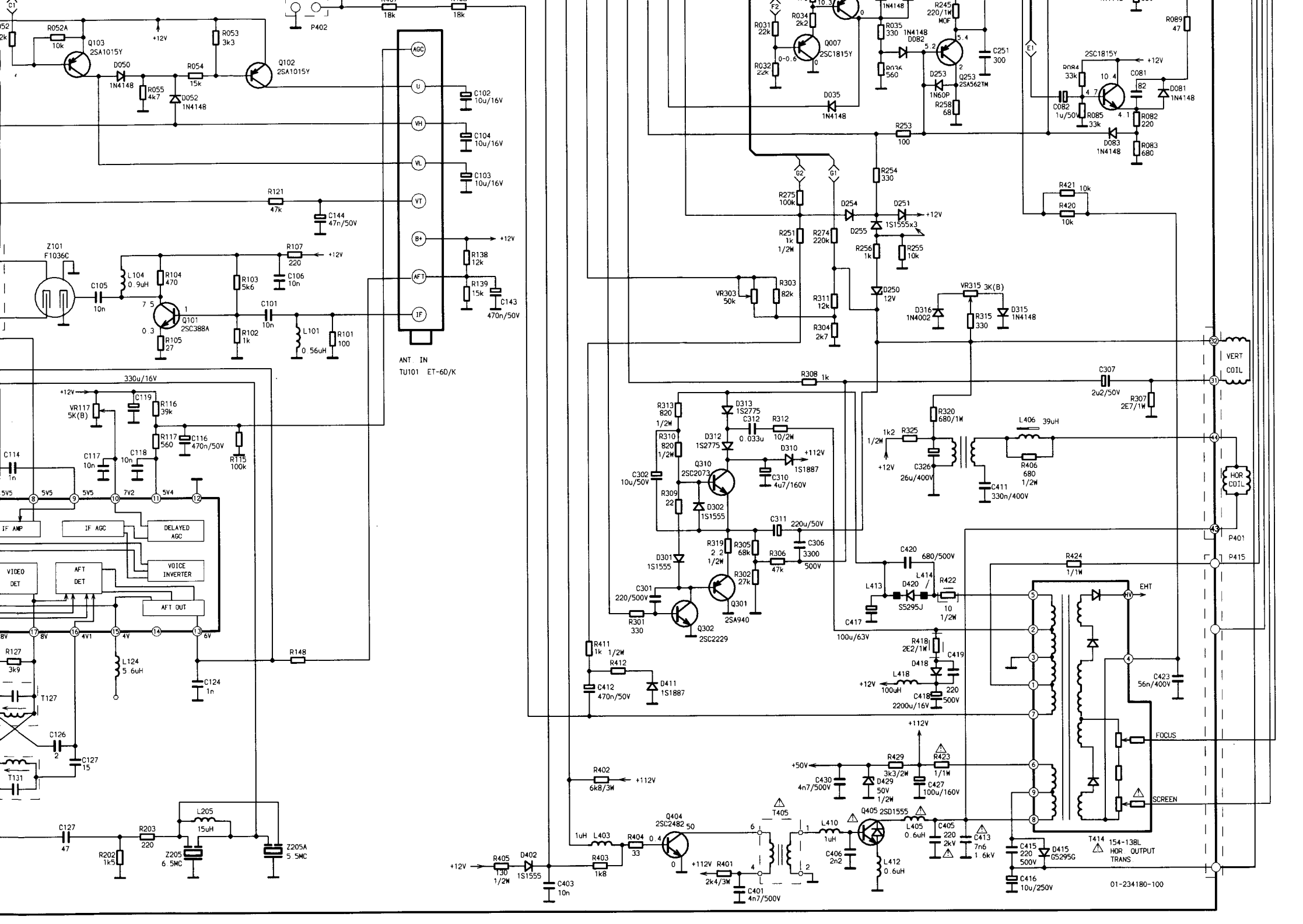
R052A 10k
Q103 2SA1015Y
+12V
R053 3k3
Q102 2SA1015Y
D050 1N4148
R054 15k
R055 4k7
D052 1N4148
P402
18k
18k
AGC
U
VH
VL
VT
B+
AFT
IF
C102 10u/16V
C104 10u/16V
C103 10u/16V
R121 47k
C144 47n/50V
R138 12k
R139 15k
C143 470n/50V
Z101 F1036C
C105 10n
L104 0.9uH
R104 470
R103 5k6
R107 220
C106 10n
Q101 2SC388A
R105 27
R102 1k
C101 10n
L101 0.56uH
R101 100
ANT. IN
TU101 ET-6D/K
330u/16V
VR117 5K(B)
C119
R116 39k
R117 560
C116 470n/50V
R115 100k
C114 1n
C117 10n
C118 10n
IF AMP
IF AGC
DELAYED AGC
VIDEO DET
AFT DET
VOICE INVERTER
AFT OUT
R127 3k9
T127
L124 5.6uH
C124 1n
R148
C126 2
C127 15
T131
C127 47
R203 220
L205 15uH
R202 1k5
Z205 6.5MC
Z205A 5.5MC
R031 22k
R032 22k
R034 2k2
Q007 2SC1815Y
R035 330
D082 1N4148
R036 560
D035 1N4148
R245 220/1W MOF
Q253 2SA562TM
C251 300
D253 1N60P
R258 68
R253 100
R254 330
R275 100k
D254
D251
1S1555x3
R251 1k 1/2W
R274 220k
D255
R256 1k
R255 10k
D250 12V
VR303 50k
R303 82k
R311 12k
R304 2k7
VR315 3K(B)
D316 1N4002
R315 330
D315 1N4148
R089 47
2SC1815Y
R084 33k
C081 82
D081 1N4148
C082 1u/50V
R085 33k
R082 220
D083 1N4148
R083 680
R421 10k
R420 10k
R308 1k
C307 2u2/50V
R307 2E7/1W
VERT COIL
HOR COIL
P401
P415
R313 820 1/2W
D313 1S2775
C312 0.033u
R312 10/2W
R310 820 1/2W
D312 1S2775
D310 1S1887
+112V
C302 10u/50V
Q310 2SC2073
C310 4u7/160V
R309 22
D302 1S1555
C311 220u/50V
R319 2.2 1/2W
R305 68k
C306 3300 500V
R306 47k
D301 1S1555
R302 27k
Q301 2SA940
C301 220/500V
R301 330
Q302 2SC2229
R320 680/1W
L406 39uH
R325 1k2 1/2W
C326 26u/400V
R406 680 1/2W
C411 330n/400V
C420 680/500V
L414
D420 S5295J
R422 10 1/2W
L413
C417 100u/63V
R424 1/1W
EHT
R418 2E2/1W
C419
D418
L418 100uH
C418 2200u/16V 220 500V
C423 56n/400V
R411 1k 1/2W
R412
C412 470n/50V
D411 1S1887
FOCUS
SCREEN
R429 3k3/2W
R423 1/1W
+50V
C430 4n7/500V
D429 50V 1/2W
C427 100u/160V
R402 6k8/3W
Q404 2SC2482
T405
Q405 2SD1555
L410 1uH
L405 0.6uH
C405 220 2kV
C413 7n6 1.6kV
1uH L403
R404 33
R403 1k8
R405 130 1/2W
D402 1S1555
C403 10n
R401 2k4/3W
C401 4n7/500V
C406 2n2
L412 0.6uH
C415 220 500V
D415 G5295G
C416 10u/250V
T414 154-138L HOR. OUTPUT TRANS
01-234180-100