Applicable Country & Regions:

All Regions

Product Service Manual – Level 3

Service Manual for BenQ:
Projector/MP515 (Black)
<9H.J0A77.000>
Projector/MP515st(White)
<9H.J1P77.000>

Version: 00a
Date:2009/06/09

Notice:

For RO to input specific "Legal Requirement" in specific NS regarding to responsibility and liability statements.

Please check BenQ's eSupport web site, http://esupport.benq.com, to ensure that you have the most recent version of this manual.

First Edition (Jun 2009)
© Copyright BenQ Corporation 2009. All Right Reserved.

Schematics—Main board:

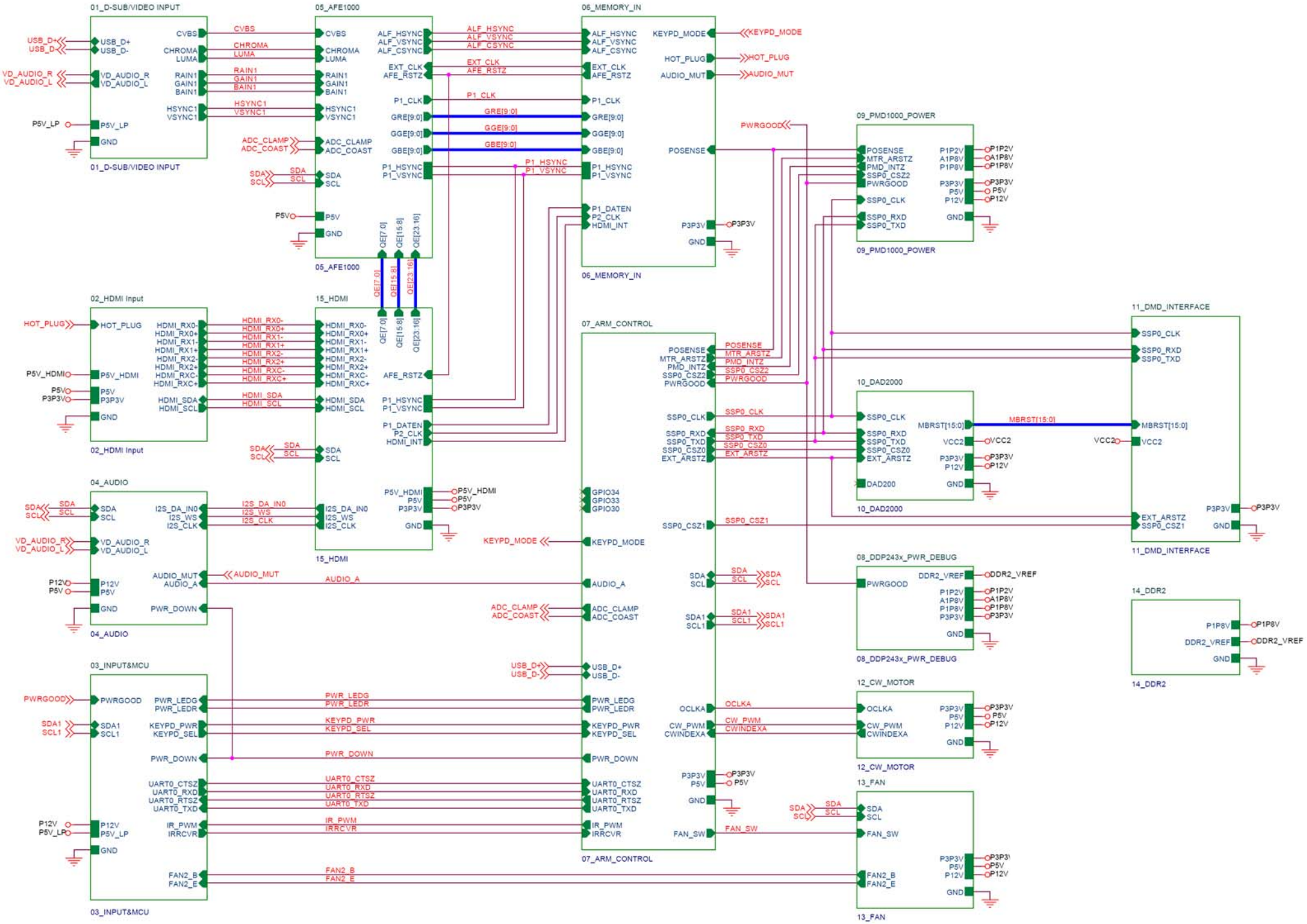

D-sub RGB Input 1

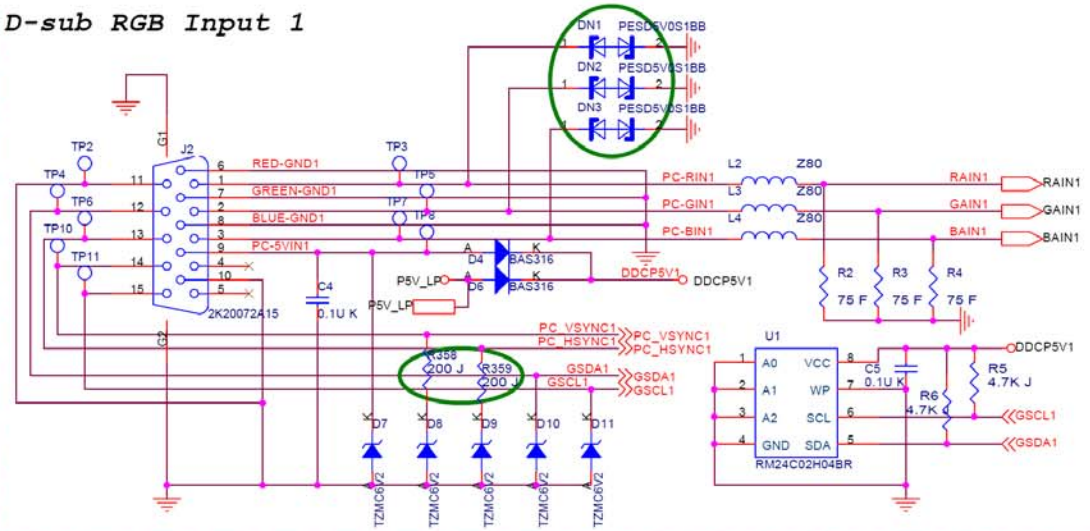

USB Input

These parts of this portion should be connected closely.

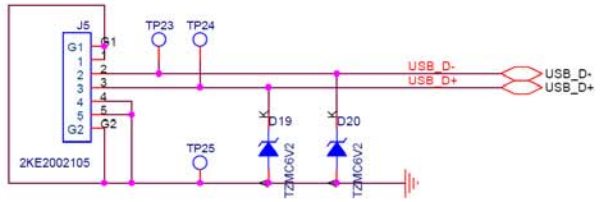

S-Video Input

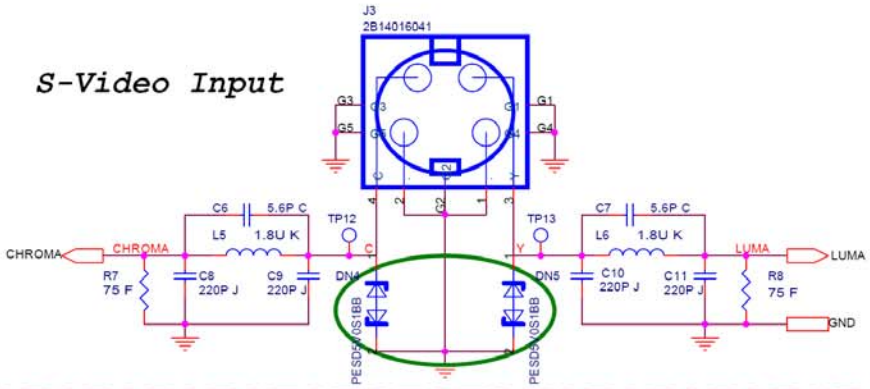

H1,V1 Buffer

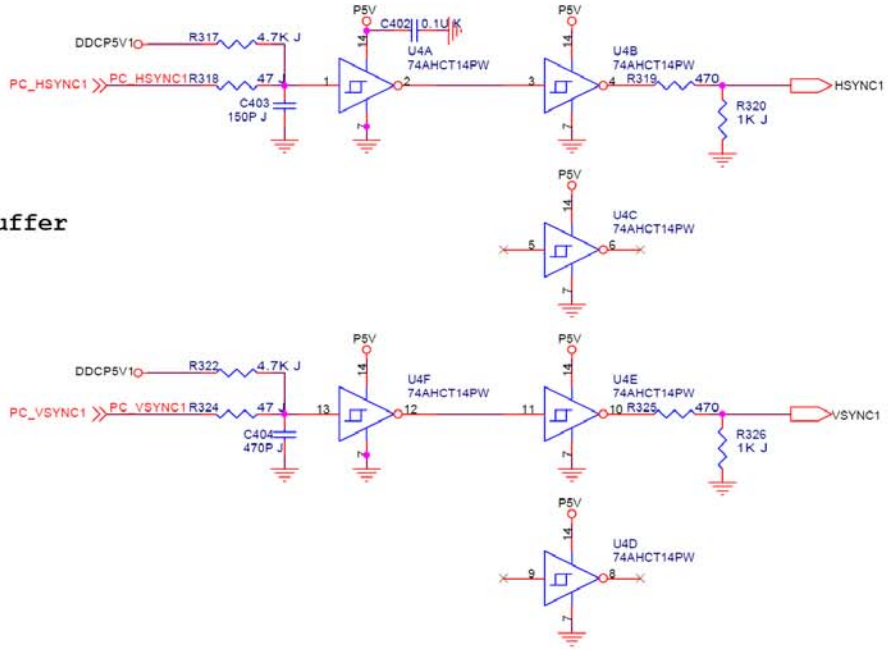

Video Input

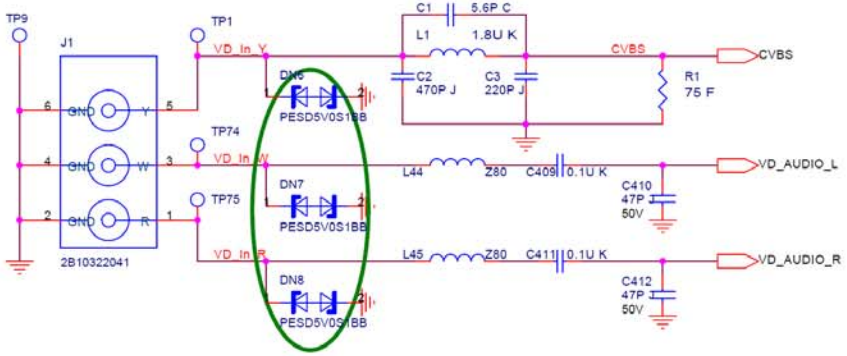

HDMI INTERFACE

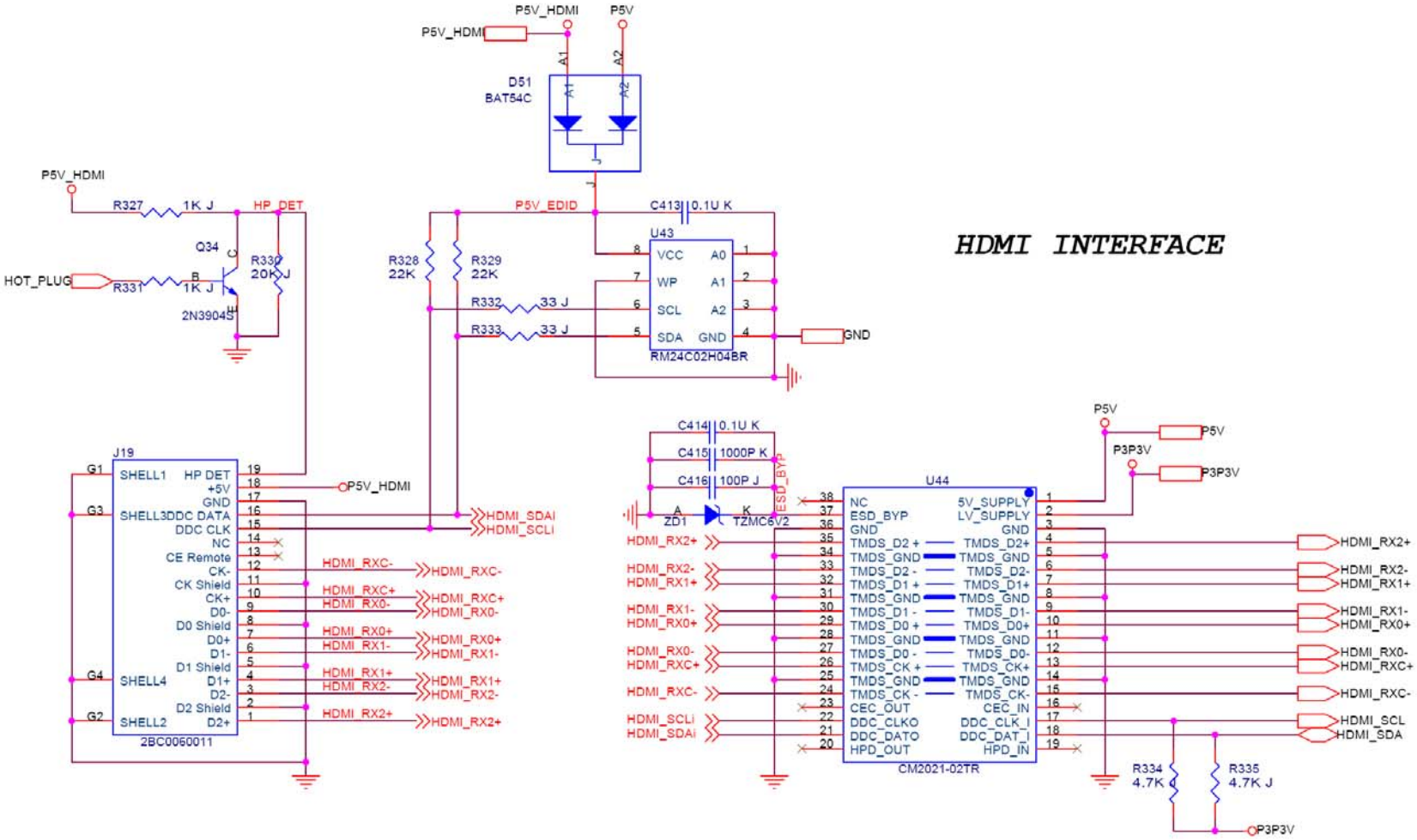

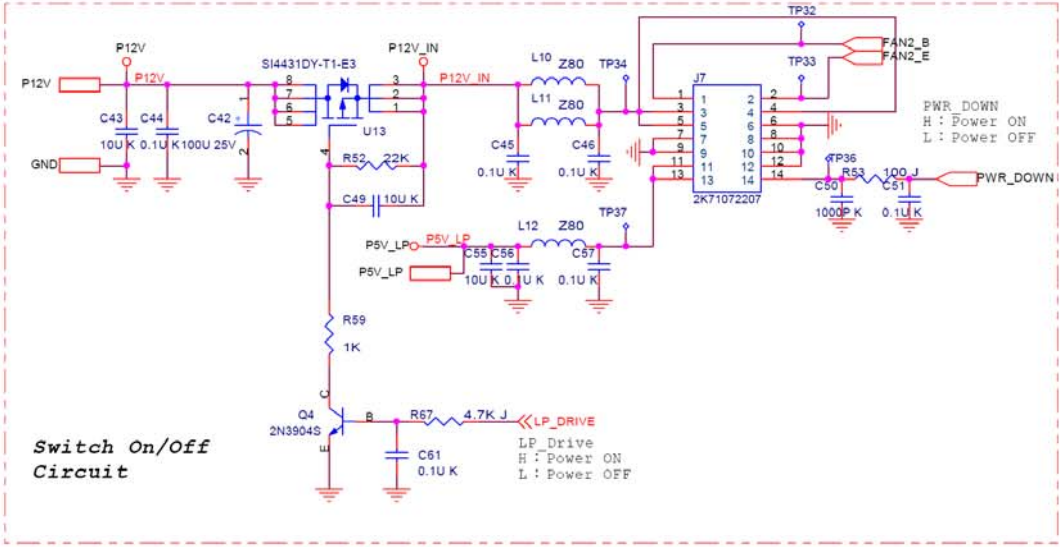
Switch On/Off Circuit
P12V
GND
SI4431DY-T1-E3
U13
P12V_IN
L10 Z80
L11 Z80
TP34
TP32
TP33
FAN2_B
FAN2_E
J7
2K71072207
PWR_DOWN
H : Power ON
L : Power OFF
TP36
R53 100 J
C50 1000P K
C51 0.1U K
R52 22K
C49 10U K
C45 0.1U K
C46 0.1U K
TP37
L12 Z80
P5V_LP
C55 10U K
C56 0.1U K
C57 0.1U K
R59 1K
Q4 2N3904S
R67 4.7K J
LP_DRIVE
C61 0.1U K
LP_Drive
H : Power ON
L : Power OFF

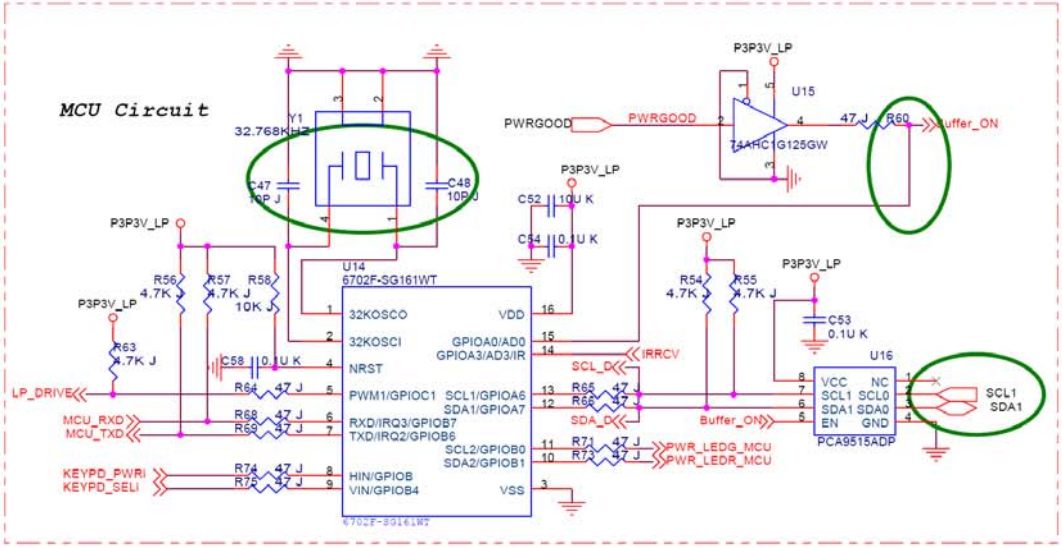
MCU Circuit
Y1 32.768KHZ
C47 10P J
C48 10P J
U14 6702F-SG161WT
32KOSCO
32KOSCI
NRST
PWM1/GPIOC1
RXD/IRQ3/GPIOB7
TXD/IRQ2/GPIOB6
HIN/GPIOB
VIN/GPIOB4
VDD
GPIOA0/AD0
GPIOA3/AD3/IR
SCL1/GPIOA6
SDA1/GPIOA7
SCL2/GPIOB0
SDA2/GPIOB1
VSS
P3P3V_LP
PWRGOOD
U15 74AHC1G125GW
47 J
R60
Buffer_ON
C52 10U K
C54 0.1U K
R56 4.7K
R57 4.7K J
R58 10K J
R63 4.7K J
C58 0.1U K
R64 47 J
R68 47 J
R69 47 J
R74 47 J
R75 47 J
LP_DRIVE
MCU_RXD
MCU_TXD
KEYPD_PWRI
KEYPD_SELI
IRRCV
SCL_D
SDA_D
R65 47 J
R66 47 J
R71 47 J
R73 47 J
PWR_LEDG_MCU
PWR_LEDR_MCU
R54 4.7K
R55 4.7K J
C53 0.1U K
U16 PCA9515ADP
VCC
NC
SCL1
SCL0
SDA1
SDA0
EN
GND
SCL1
SDA1

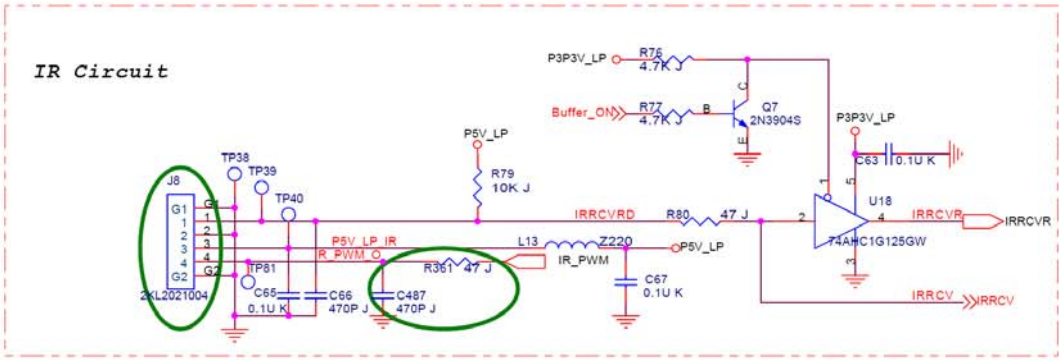
IR Circuit
P3P3V_LP
R76 4.7K J
R77 4.7K J
Buffer_ON
Q7 2N3904S
P5V_LP
R79 10K J
C63 0.1U K
U18 74AHC1G125GW
IRRCVRD
R80 47 J
IRRCVR
IRRCVR
J8
2KL2021004
TP38
TP39
TP40
TP81
P5V_LP_IR
R_PWM_O
R361 47 J
L13 Z220
IR_PWM
P5V_LP
C67 0.1U K
C65 0.1U K
C66 470P J
C487 470P J
IRRCV
IRRCV

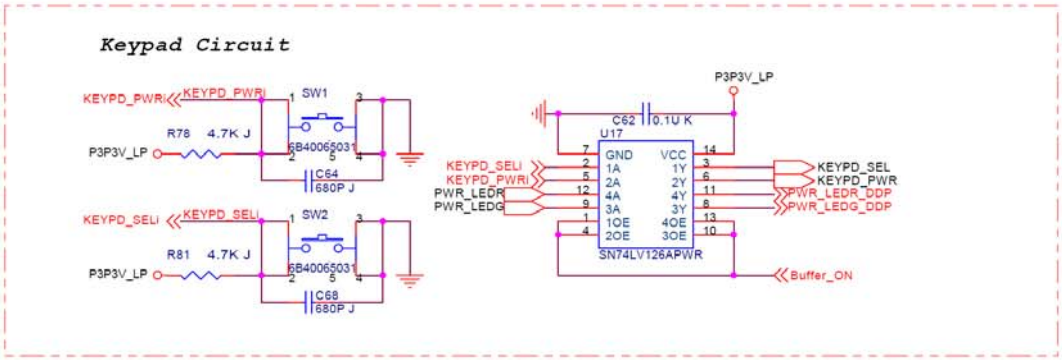
Keypad Circuit
KEYPD_PWRI
SW1 6B40065031
R78 4.7K J
P3P3V_LP
C64 680P J
KEYPD_SELI
SW2 6B40065031
R81 4.7K J
C68 680P J
C62 0.1U K
U17 SN74LV126APWR
GND
VCC
1Y
2Y
4Y
3Y
4OE
3OE
1A
2A
4A
3A
1OE
2OE
KEYPD_SEL
KEYPD_PWR
PWR_LEDR_DDP
PWR_LEDG_DDP
Buffer_ON

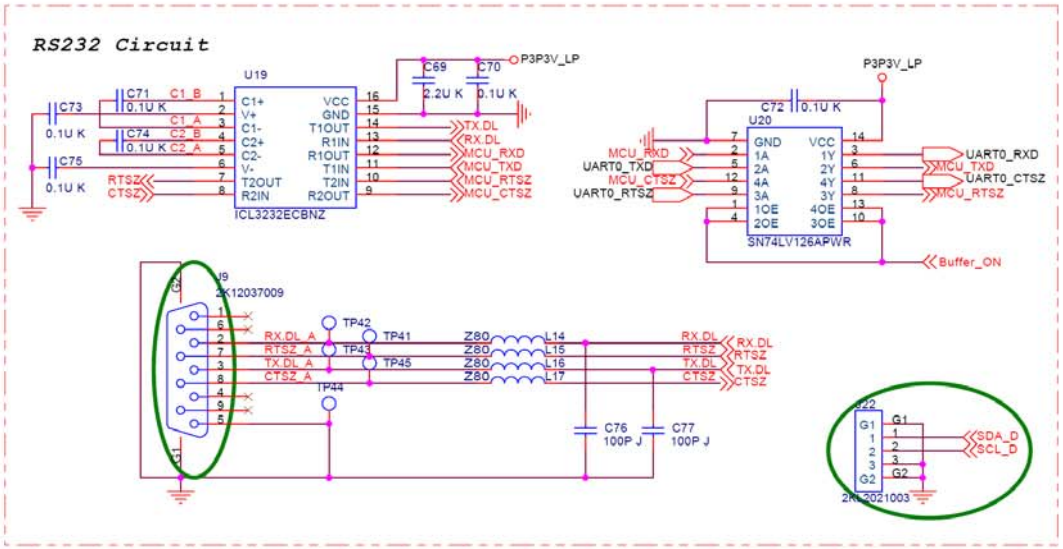
RS232 Circuit
U19 ICL3232ECBNZ
C71 0.1U K
C74 0.1U K
C73 0.1U K
C75 0.1U K
C69 2.2U K
C70 0.1U K
P3P3V_LP
TX.DL
RX.DL
MCU_RXD
MCU_TXD
MCU_RTSZ
MCU_CTSZ
RTSZ
CTSZ
U20 SN74LV126APWR
C72 0.1U K
MCU_RXD
UART0_TXD
MCU_CTSZ
UART0_RTSZ
UART0_RXD
MCU_TXD
UART0_CTSZ
MCU_RTSZ
Buffer_ON
J9 2K12037009
TP42
TP41
TP43
TP45
TP44
RX.DL_A
RTSZ_A
TX.DL_A
CTSZ_A
Z80
L14
L15
L16
L17
C76 100P J
C77 100P J
J22 2KL2021003
SDA_D
SCL_D

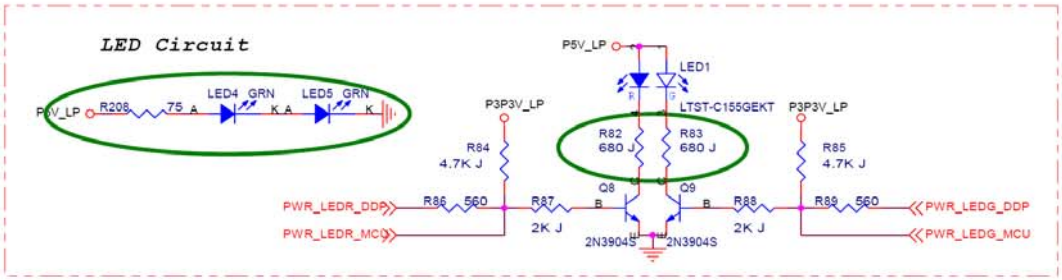
LED Circuit
P5V_LP
R208 75
LED4 GRN
LED5 GRN
LED1 LTST-C155GEKT
R82 680 J
R83 680 J
R84 4.7K J
R85 4.7K J
Q8 2N3904S
Q9 2N3904S
R86 560
R87 2K J
R88 2K J
R89 560
PWR_LEDR_DDP
PWR_LEDR_MCU
PWR_LEDG_DDP
PWR_LEDG_MCU

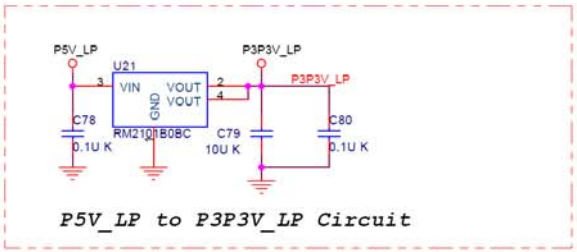
P5V_LP to P3P3V_LP Circuit
U21 RM2101B0BC
VIN
VOUT
GND
C78 0.1U K
C79 10U K
C80 0.1U K

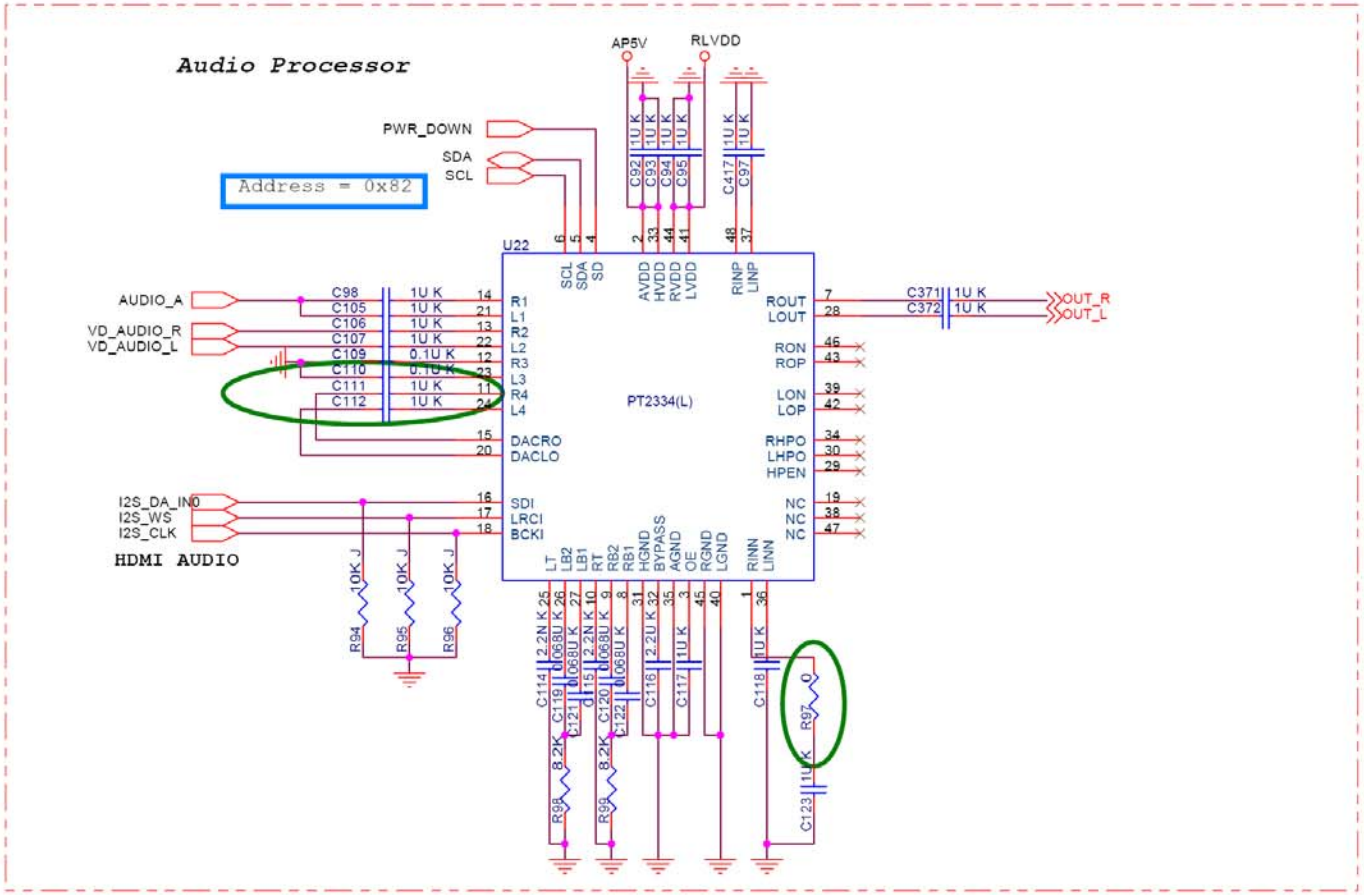
Audio Processor
AP5V
RLVDD
PWR_DOWN
SDA
SCL
Address = 0x82
U22
PT2334(L)
AUDIO_A
VD_AUDIO_R
VD_AUDIO_L
I2S_DA_IN0
I2S_WS
I2S_CLK
HDMI AUDIO
OUT_R
OUT_L

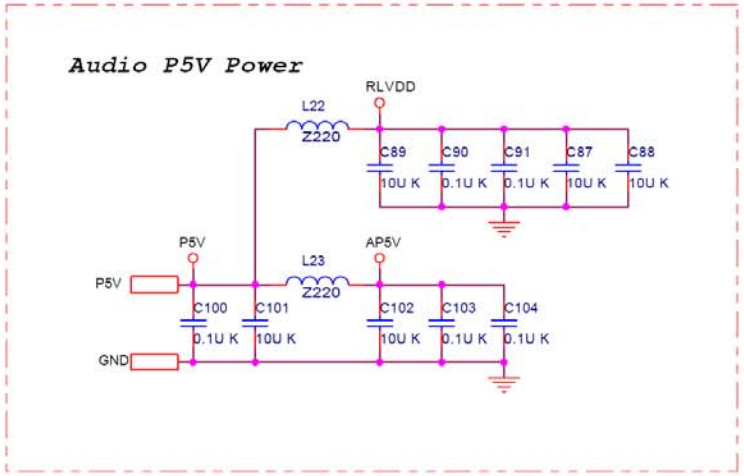
Audio P5V Power
RLVDD
L22
Z220
L23
Z220
P5V
AP5V
GND

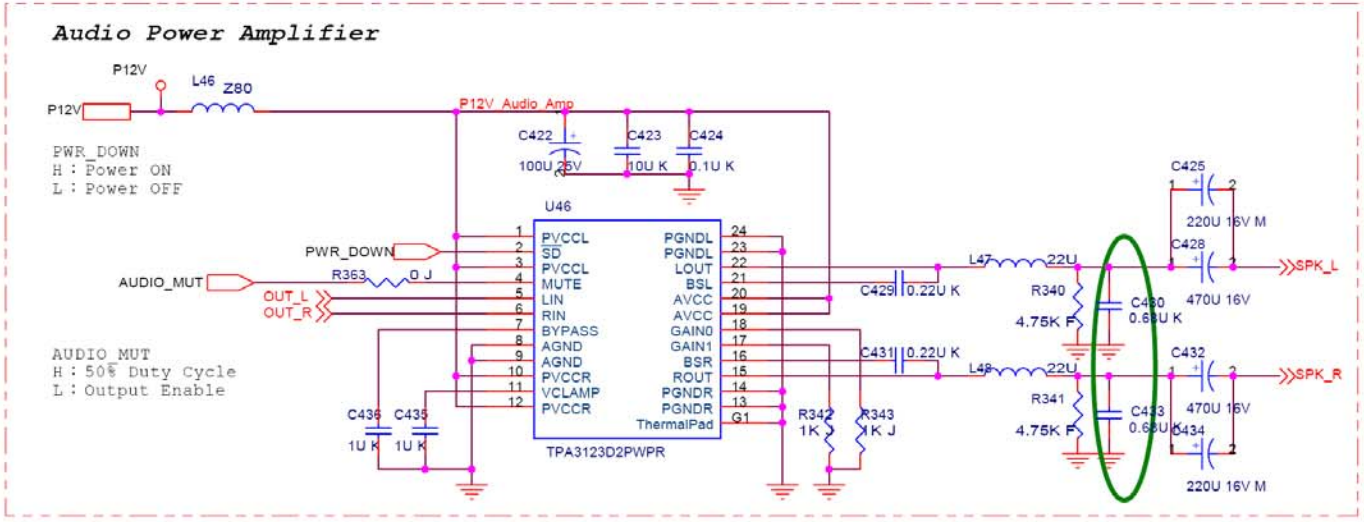
Audio Power Amplifier
P12V
L46
Z80
P12V_Audio_Amp
PWR_DOWN
H : Power ON
L : Power OFF
AUDIO_MUT
H : 50% Duty Cycle
L : Output Enable
U46
TPA3123D2PWPR
SPK_L
SPK_R

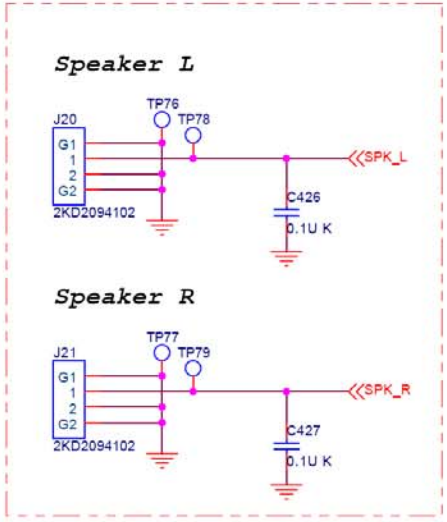
Speaker L
Speaker R
J20
J21
2KD2094102
SPK_L
SPK_R

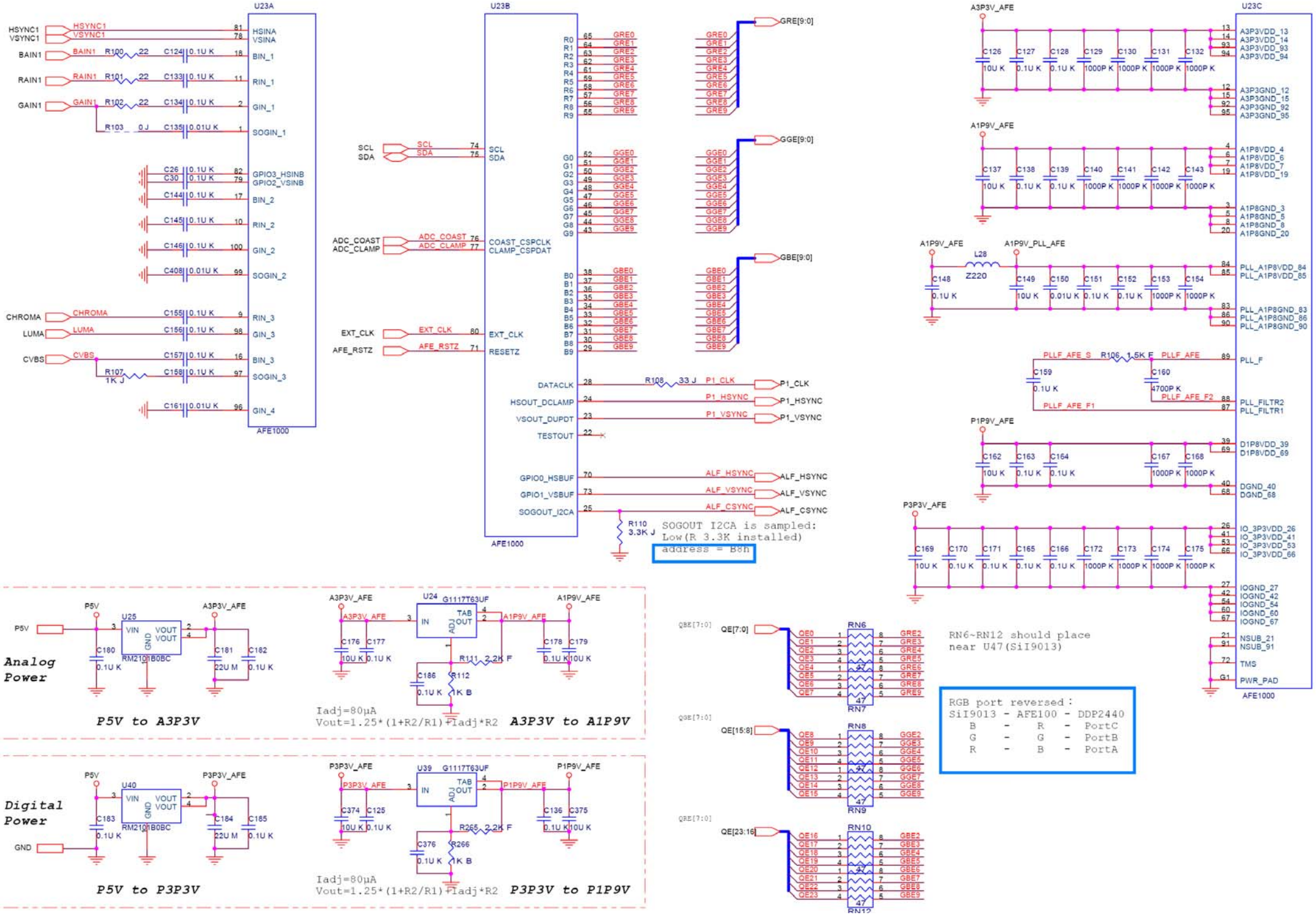
U23A
HSYNC1
VSYNC1
BAIN1
RAIN1
GAIN1
HSINA
VSINA
BIN_1
RIN_1
GIN_1
SOGIN_1
GPIO3_HSINB
GPIO2_VSINB
BIN_2
RIN_2
GIN_2
SOGIN_2
CHROMA
LUMA
CVBS
RIN_3
GIN_3
BIN_3
SOGIN_3
GIN_4
AFE1000
U23B
SCL
SDA
ADC_COAST
ADC_CLAMP
COAST_CSPCLK
CLAMP_CSPDAT
EXT_CLK
AFE_RSTZ
RESETZ
DATACLK
HSOUT_DCLAMP
VSOUT_DUPDT
TESTOUT
GPIO0_HSBUF
GPIO1_VSBUF
SOGOUT_I2CA
P1_CLK
P1_HSYNC
P1_VSYNC
ALF_HSYNC
ALF_VSYNC
ALF_CSYNC
GRE[9:0]
GGE[9:0]
GBE[9:0]
SOGOUT I2CA is sampled:
Low(R 3.3K installed)
address = B8h
U23C
A3P3V_AFE
A1P9V_AFE
A1P9V_PLL_AFE
P1P9V_AFE
P3P3V_AFE
PLL_F
PLL_FILTR2
PLL_FILTR1
NSUB_21
NSUB_91
TMS
PWR_PAD
RN6~RN12 should place
near U47(SiI9013)
RGB port reversed :
SiI9013 - AFE100 - DDP2440
B - R - PortC
G - G - PortB
R - B - PortA
Analog
Power
P5V to A3P3V
A3P3V to A1P9V
Iadj=80μA
Vout=1.25*(1+R2/R1)+Iadj*R2
Digital
Power
P5V to P3P3V
P3P3V to P1P9V

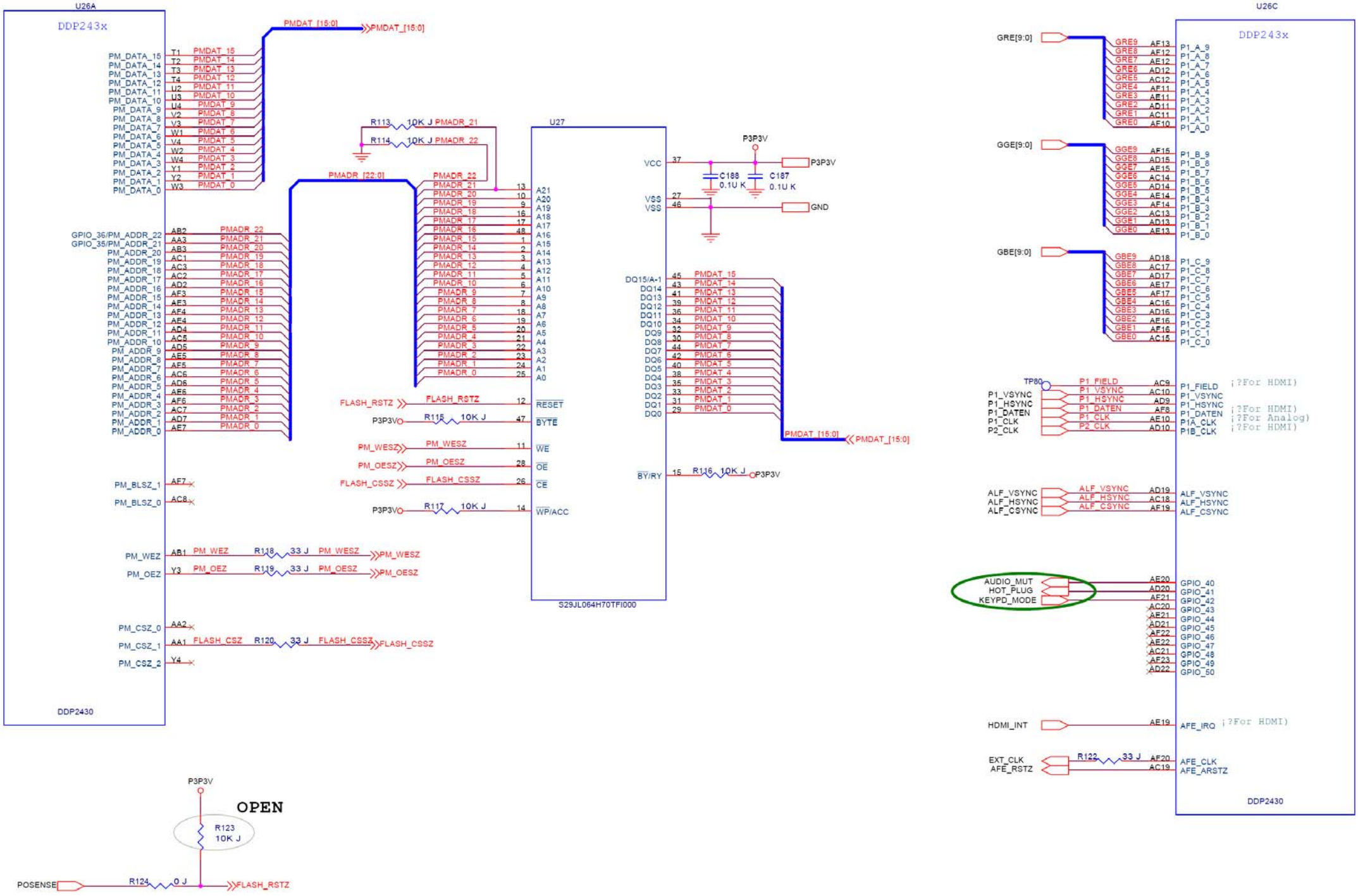
U26A
DDP243x
DDP2430
PMDAT_[15:0]
PMADR_[22:0]
PM_DATA_15
PM_DATA_14
PM_DATA_13
PM_DATA_12
PM_DATA_11
PM_DATA_10
PM_DATA_9
PM_DATA_8
PM_DATA_7
PM_DATA_6
PM_DATA_5
PM_DATA_4
PM_DATA_3
PM_DATA_2
PM_DATA_1
PM_DATA_0
GPIO_36/PM_ADDR_22
GPIO_35/PM_ADDR_21
PM_ADDR_20
PM_ADDR_19
PM_ADDR_18
PM_ADDR_17
PM_ADDR_16
PM_ADDR_15
PM_ADDR_14
PM_ADDR_13
PM_ADDR_12
PM_ADDR_11
PM_ADDR_10
PM_ADDR_9
PM_ADDR_8
PM_ADDR_7
PM_ADDR_6
PM_ADDR_5
PM_ADDR_4
PM_ADDR_3
PM_ADDR_2
PM_ADDR_1
PM_ADDR_0
PM_BLSZ_1
PM_BLSZ_0
PM_WEZ
PM_OEZ
PM_CSZ_0
PM_CSZ_1
PM_CSZ_2
R113 10K J PMADR_21
R114 10K J PMADR_22
U27
S29JL064H70TFI000
A21
A20
A19
A18
A17
A16
A15
A14
A13
A12
A11
A10
A9
A8
A7
A6
A5
A4
A3
A2
A1
A0
VCC
VSS
VSS
P3P3V
GND
C188 0.1U K
C187 0.1U K
DQ15/A-1
DQ14
DQ13
DQ12
DQ11
DQ10
DQ9
DQ8
DQ7
DQ6
DQ5
DQ4
DQ3
DQ2
DQ1
DQ0
FLASH_RSTZ
R115 10K J
PM_WESZ
PM_OESZ
FLASH_CSSZ
R117 10K J
RESET
BYTE
WE
OE
CE
WP/ACC
BY/RY
R116 10K J
R118 33 J
R119 33 J
R120 33 J
R123 10K J
OPEN
R124 0 J
POSENSE
U26C
GRE[9:0]
GGE[9:0]
GBE[9:0]
P1_A_9
P1_A_8
P1_A_7
P1_A_6
P1_A_5
P1_A_4
P1_A_3
P1_A_2
P1_A_1
P1_A_0
P1_B_9
P1_B_8
P1_B_7
P1_B_6
P1_B_5
P1_B_4
P1_B_3
P1_B_2
P1_B_1
P1_B_0
P1_C_9
P1_C_8
P1_C_7
P1_C_6
P1_C_5
P1_C_4
P1_C_3
P1_C_2
P1_C_1
P1_C_0
TP80
P1_VSYNC
P1_HSYNC
P1_DATEN
P1_CLK
P2_CLK
P1_FIELD ;?For HDMI)
P1_VSYNC
P1_HSYNC
P1_DATEN ;?For HDMI)
P1_DATEN ;?For Analog)
P1A_CLK ;?For HDMI)
P1B_CLK
ALF_VSYNC
ALF_HSYNC
ALF_CSYNC
AUDIO_MUT
HOT_PLUG
KEYPD_MODE
GPIO_40
GPIO_41
GPIO_42
GPIO_43
GPIO_44
GPIO_45
GPIO_46
GPIO_47
GPIO_48
GPIO_49
GPIO_50
HDMI_INT
AFE_IRQ ;?For HDMI)
EXT_CLK
AFE_RSTZ
R122 33 J
AFE_CLK
AFE_ARSTZ

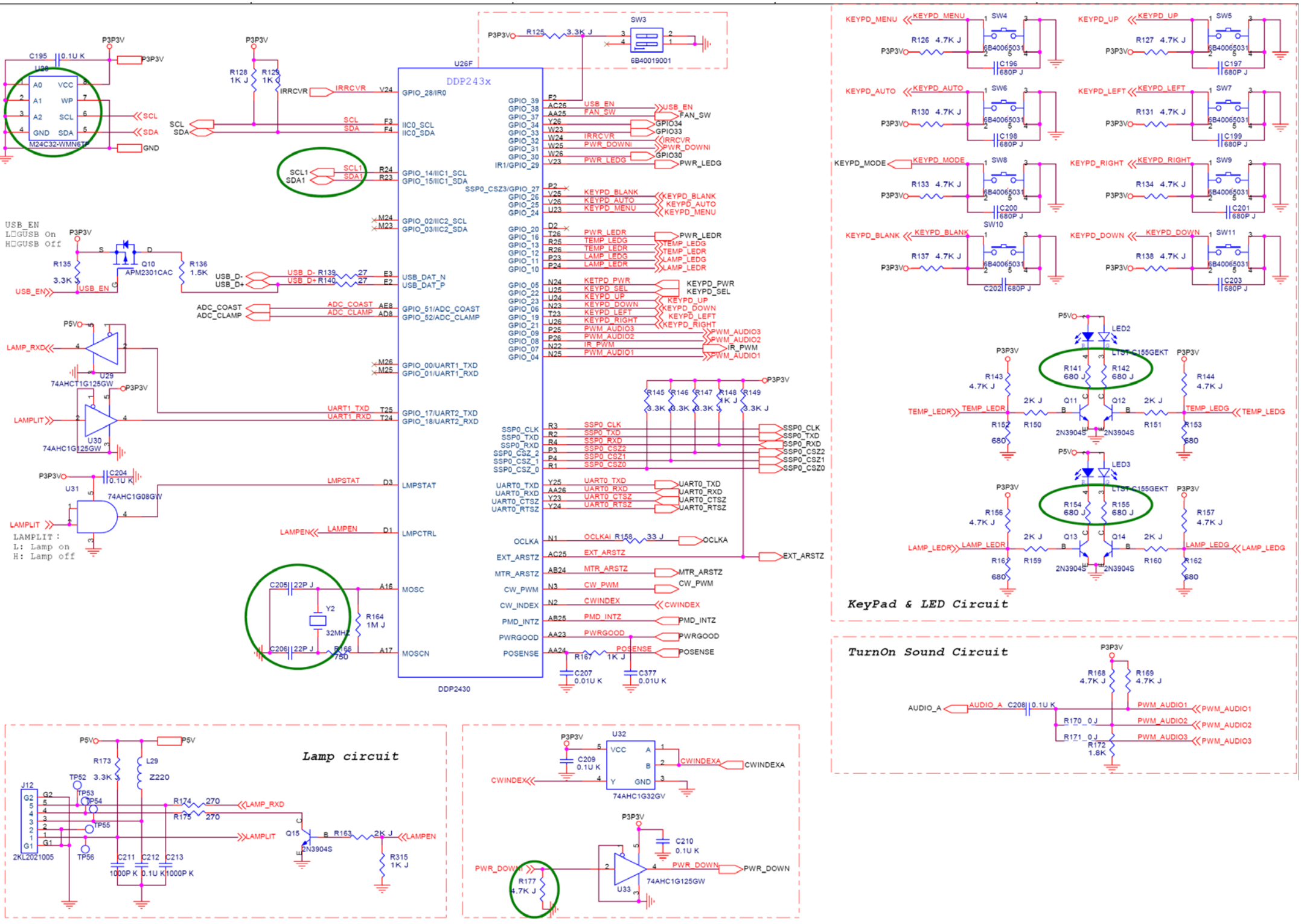
DDP243x
DDP2430
M24C32-WMN6TP
74AHCT1G125GW
74AHC1G125GW
74AHC1G08GW
APM2301CAC
2N3904S
74AHC1G32GV
6B40019001
6B40065031
2KL2021005
USB_EN
L□GUSB On
H□GUSB Off
LAMPLIT :
L: Lamp on
H: Lamp off
KeyPad & LED Circuit
TurnOn Sound Circuit
Lamp circuit

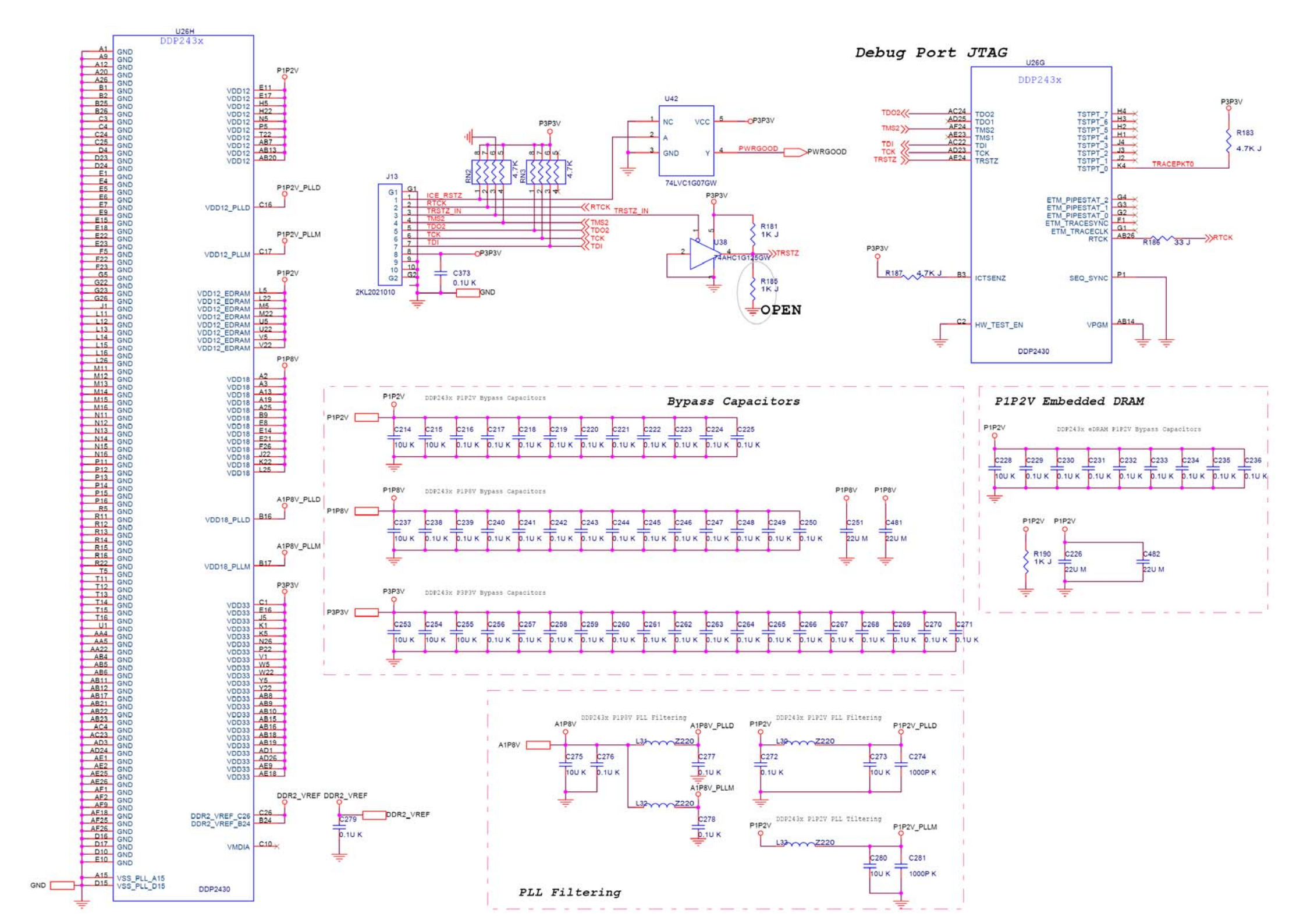
Debug Port JTAG
Bypass Capacitors
P1P2V Embedded DRAM
PLL Filtering
U26H
DDP243x
DDP2430
U26G
U42
74LVC1G07GW
U38
74AHC1G125GW
J13
2KL2021010
OPEN
P1P2V
P3P3V
P1P8V
A1P8V_PLLD
A1P8V_PLLM
P1P2V_PLLD
P1P2V_PLLM
DDR2_VREF
GND
TDO2
TMS2
TDI
TCK
TRSTZ
RTCK
TRSTZ_IN
ICE_RSTZ
PWRGOOD
TRACEPKT0
ICTSENZ
SEQ_SYNC
HW_TEST_EN
VPGM
VSS_PLL_A15
VSS_PLL_D15
VDD12_PLLD
VDD12_PLLM
VDD18_PLLD
VDD18_PLLM
VMDIA
DDR2_VREF_C26
DDR2_VREF_B24
DDP243x P1P2V Bypass Capacitors
DDP243x P1P8V Bypass Capacitors
DDP243x P3P3V Bypass Capacitors
DDP243x eDRAM P1P2V Bypass Capacitors
DDP243x P1P8V PLL Filtering
DDP243x P1P2V PLL Filtering
DDP243x P1P2V PLL Filtering

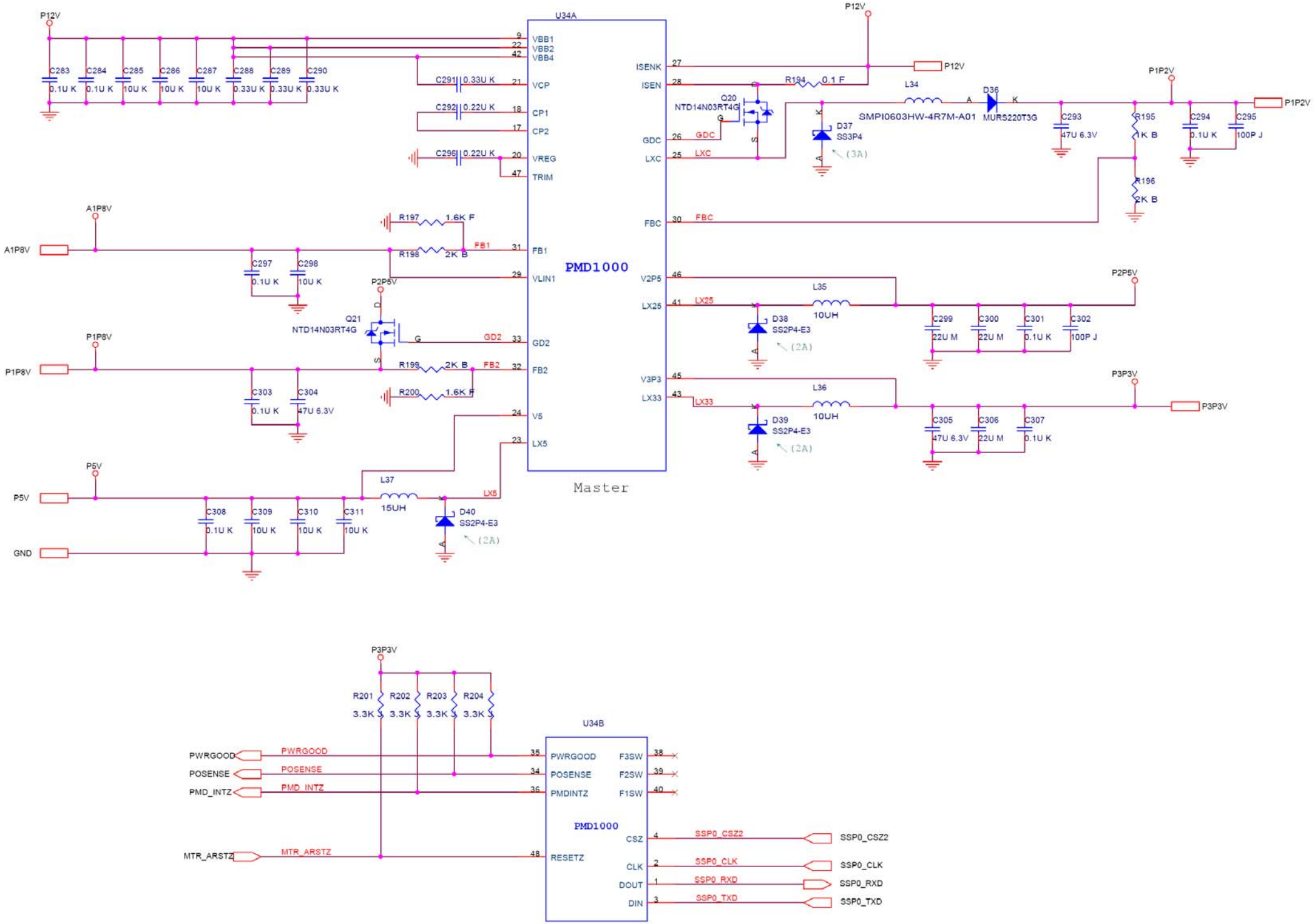
P12V
U34A
VBB1
VBB2
VBB4
VCP
CP1
CP2
VREG
TRIM
FB1
VLIN1
GD2
FB2
V5
LX5
ISENK
ISEN
GDC
LXC
FBC
V2P5
LX25
V3P3
LX33
PMD1000
Master
C283 0.1U K
C284 0.1U K
C285 10U K
C286 10U K
C287 10U K
C288 0.33U K
C289 0.33U K
C290 0.33U K
C291 0.33U K
C292 0.22U K
C296 0.22U K
A1P8V
R197 1.6K F
R198 2K B
C297 0.1U K
C298 10U K
P2P5V
Q21
NTD14N03RT4G
P1P8V
R199 2K B
R200 1.6K F
C303 0.1U K
C304 47U 6.3V
P5V
L37
15UH
D40
SS2P4-E3
(2A)
C308 0.1U K
C309 10U K
C310 10U K
C311 10U K
GND
R194 0.1 F
Q20
NTD14N03RT4G
L34
SMPI0603HW-4R7M-A01
D36
MURS220T3G
D37
SS3P4
(3A)
C293 47U 6.3V
R195 1K B
R196 2K B
C294 0.1U K
C295 100P J
P1P2V
L35
10UH
D38
SS2P4-E3
C299 22U M
C300 22U M
C301 0.1U K
C302 100P J
L36
10UH
D39
SS2P4-E3
C305 47U 6.3V
C306 22U M
C307 0.1U K
P3P3V
R201 3.3K
R202 3.3K
R203 3.3K
R204 3.3K
U34B
PWRGOOD
POSENSE
PMD_INTZ
MTR_ARSTZ
F3SW
F2SW
F1SW
PMDINTZ
RESETZ
CSZ
CLK
DOUT
DIN
SSP0_CSZ2
SSP0_CLK
SSP0_RXD
SSP0_TXD

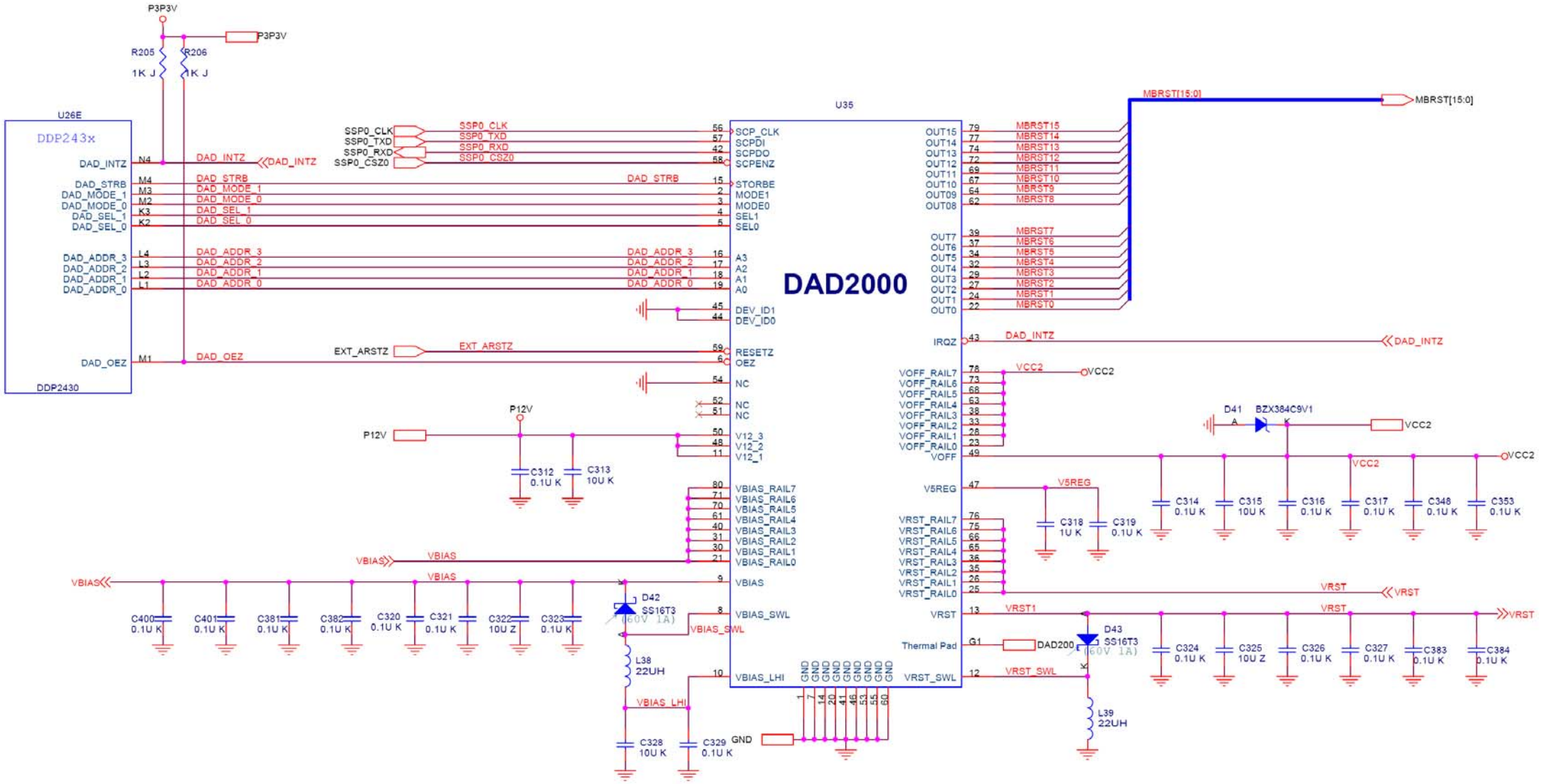
P3P3V
R205
1K J
R206
1K J
U26E
DDP243x
DAD_INTZ
DAD_STRB
DAD_MODE_1
DAD_MODE_0
DAD_SEL_1
DAD_SEL_0
DAD_ADDR_3
DAD_ADDR_2
DAD_ADDR_1
DAD_ADDR_0
DAD_OEZ
DDP2430
SSP0_CLK
SSP0_TXD
SSP0_RXD
SSP0_CSZ0
EXT_ARSTZ
U35
DAD2000
SCP_CLK
SCPDI
SCPDO
SCPENZ
STORBE
MODE1
MODE0
SEL1
SEL0
A3
A2
A1
A0
DEV_ID1
DEV_ID0
RESETZ
OEZ
NC
V12_3
V12_2
V12_1
VBIAS_RAIL7
VBIAS_RAIL6
VBIAS_RAIL5
VBIAS_RAIL4
VBIAS_RAIL3
VBIAS_RAIL2
VBIAS_RAIL1
VBIAS_RAIL0
VBIAS
VBIAS_SWL
VBIAS_LHI
GND
OUT15
OUT14
OUT13
OUT12
OUT11
OUT10
OUT09
OUT08
OUT7
OUT6
OUT5
OUT4
OUT3
OUT2
OUT1
OUT0
MBRST15
MBRST14
MBRST13
MBRST12
MBRST11
MBRST10
MBRST9
MBRST8
MBRST7
MBRST6
MBRST5
MBRST4
MBRST3
MBRST2
MBRST1
MBRST0
MBRST[15:0]
IRQZ
VOFF_RAIL7
VOFF_RAIL6
VOFF_RAIL5
VOFF_RAIL4
VOFF_RAIL3
VOFF_RAIL2
VOFF_RAIL1
VOFF_RAIL0
VOFF
V5REG
VRST_RAIL7
VRST_RAIL6
VRST_RAIL5
VRST_RAIL4
VRST_RAIL3
VRST_RAIL2
VRST_RAIL1
VRST_RAIL0
VRST
Thermal Pad
VRST_SWL
VCC2
P12V
D41
BZX384C9V1
D42
SS16T3
(60V 1A)
D43
SS16T3
(60V 1A)
DAD200
L38
22UH
L39
22UH
C312
0.1U K
C313
10U K
C314
0.1U K
C315
10U K
C316
0.1U K
C317
0.1U K
C348
0.1U K
C353
0.1U K
C318
1U K
C319
0.1U K
C320
0.1U K
C321
0.1U K
C322
10U Z
C323
0.1U K
C324
0.1U K
C325
10U Z
C326
0.1U K
C327
0.1U K
C328
10U K
C329
0.1U K
C381
0.1U K
C382
0.1U K
C383
0.1U K
C384
0.1U K
C400
0.1U K
C401
0.1U K

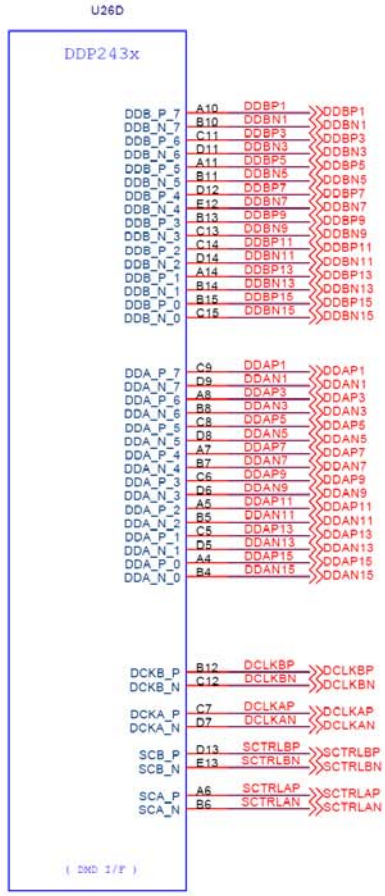
U26D
DDP243x
DDB_P_7
DDB_N_7
DDB_P_6
DDB_N_6
DDB_P_5
DDB_N_5
DDB_P_4
DDB_N_4
DDB_P_3
DDB_N_3
DDB_P_2
DDB_N_2
DDB_P_1
DDB_N_1
DDB_P_0
DDB_N_0
DDA_P_7
DDA_N_7
DDA_P_6
DDA_N_6
DDA_P_5
DDA_N_5
DDA_P_4
DDA_N_4
DDA_P_3
DDA_N_3
DDA_P_2
DDA_N_2
DDA_P_1
DDA_N_1
DDA_P_0
DDA_N_0
DCKB_P
DCKB_N
DCKA_P
DCKA_N
SCB_P
SCB_N
SCA_P
SCA_N
(DMD I/F)

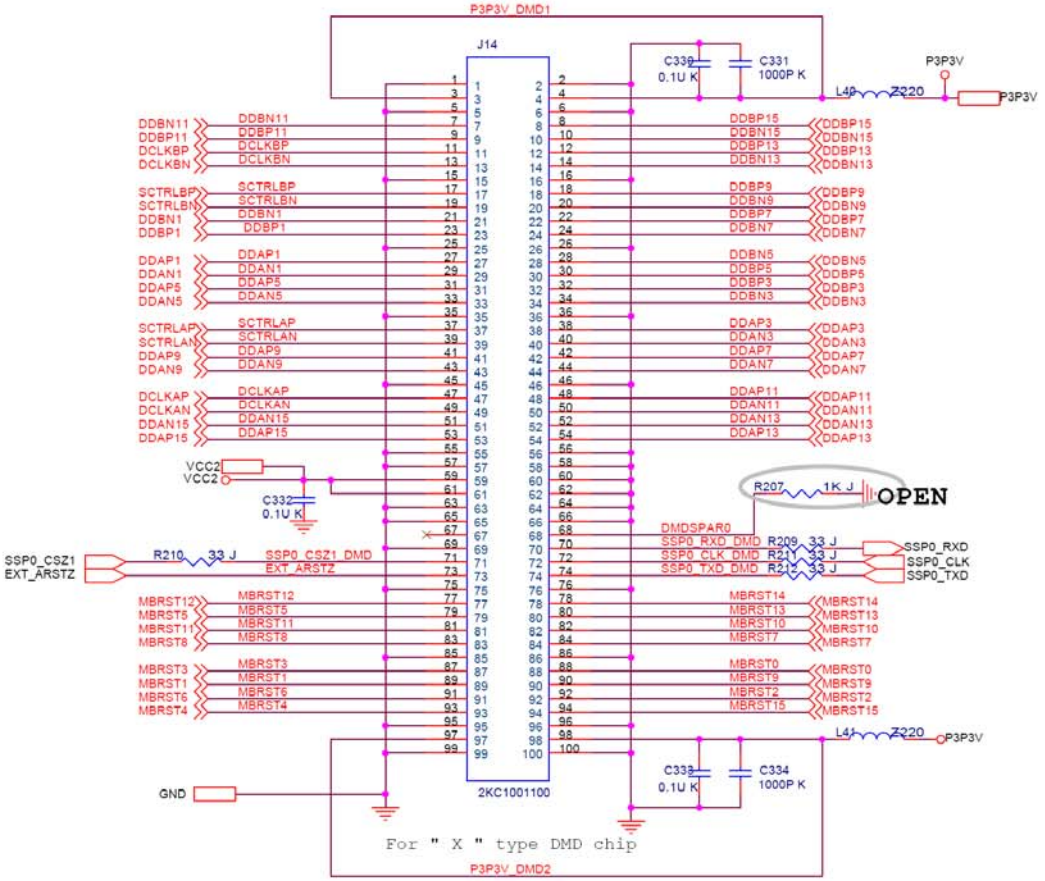
P3P3V_DMD1
J14
2KC1001100
C339
0.1U K
C331
1000P K
P3P3V
L49
Z220
C332
0.1U K
R207
1K J
OPEN
DMDSPAR0
R209 33 J
R211 33 J
R210 33 J
SSP0_CSZ1
EXT_ARSTZ
SSP0_CSZ1_DMD
EXT_ARSTZ
SSP0_RXD_DMD
SSP0_CLK_DMD
SSP0_TXD_DMD
SSP0_RXD
SSP0_CLK
SSP0_TXD
VCC2
GND
C333
0.1U K
C334
1000P K
L47
For " X " type DMD chip
P3P3V_DMD2

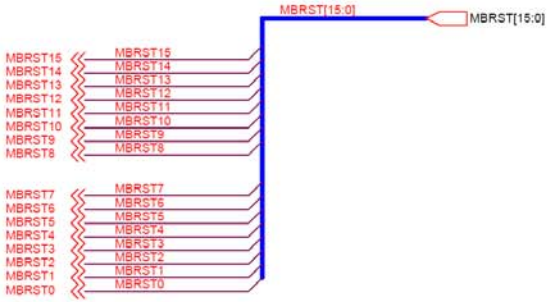
MBRST[15:0]
MBRST15
MBRST14
MBRST13
MBRST12
MBRST11
MBRST10
MBRST9
MBRST8
MBRST7
MBRST6
MBRST5
MBRST4
MBRST3
MBRST2
MBRST1
MBRST0

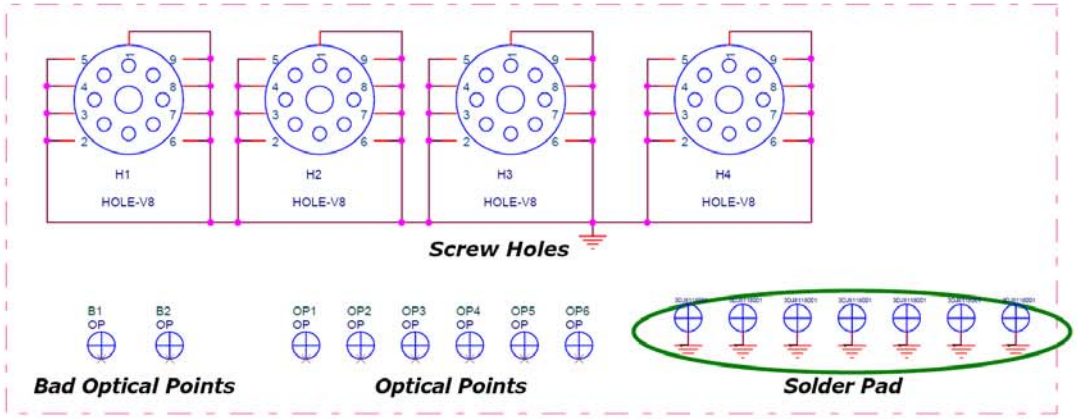
H1
HOLE-V8
H2
HOLE-V8
H3
HOLE-V8
H4
HOLE-V8
Screw Holes
B1
OP
B2
OP
Bad Optical Points
OP1
OP
OP2
OP
OP3
OP
OP4
OP
OP5
OP
OP6
OP
Optical Points
Solder Pad

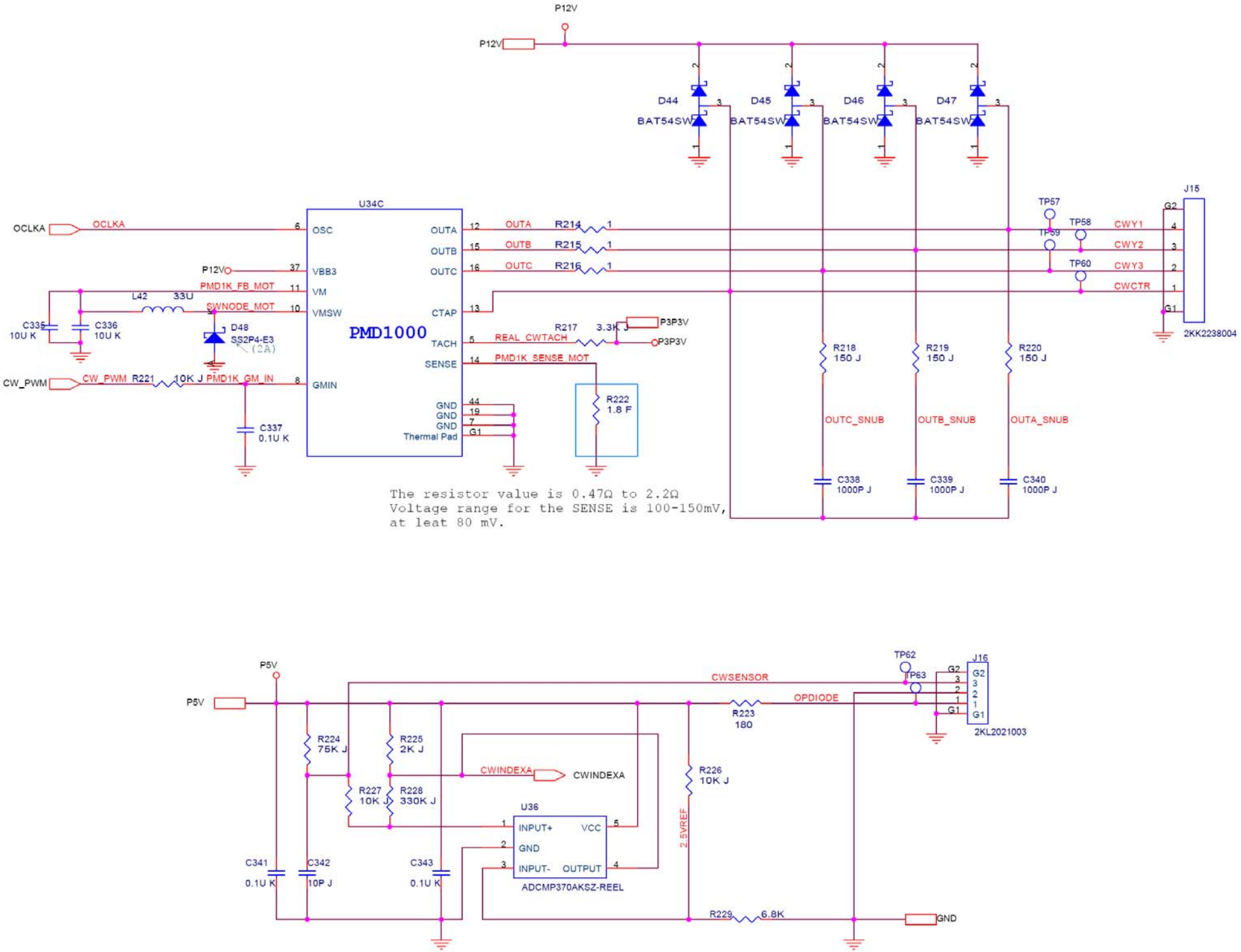
P12V
D44
D45
D46
D47
BAT54SW
U34C
PMD1000
OCLKA
P12V
PMD1K_FB_MOT
L42
33U
SWNODE_MOT
D48
SS2P4-E3
C335
10U K
C336
10U K
CW_PWM
CW_PWM_R221
10K J
PMD1K_GM_IN
C337
0.1U K
OSC
VBB3
VM
VMSW
GMIN
OUTA
OUTB
OUTC
CTAP
TACH
SENSE
GND
Thermal Pad
R214
R215
R216
R217
3.3K J
P3P3V
REAL_CWTACH
PMD1K_SENSE_MOT
R222
1.8 F
R218
150 J
R219
150 J
R220
150 J
OUTC_SNUB
OUTB_SNUB
OUTA_SNUB
C338
1000P J
C339
1000P J
C340
1000P J
TP57
TP58
TP59
TP60
CWY1
CWY2
CWY3
CWCTR
J15
2KK2238004
The resistor value is 0.47Ω to 2.2Ω
Voltage range for the SENSE is 100-150mV,
at leat 80 mV.
P5V
CWSENSOR
OPDIODE
R223
180
TP62
TP63
J16
2KL2021003
R224
75K J
R225
2K J
R227
10K J
R228
330K J
CWINDEXA
U36
INPUT+
VCC
GND
INPUT-
OUTPUT
ADCMP370AKSZ-REEL
R226
10K J
2.5VREF
C341
0.1U K
C342
10P J
C343
0.1U K
R229
6.8K
GND

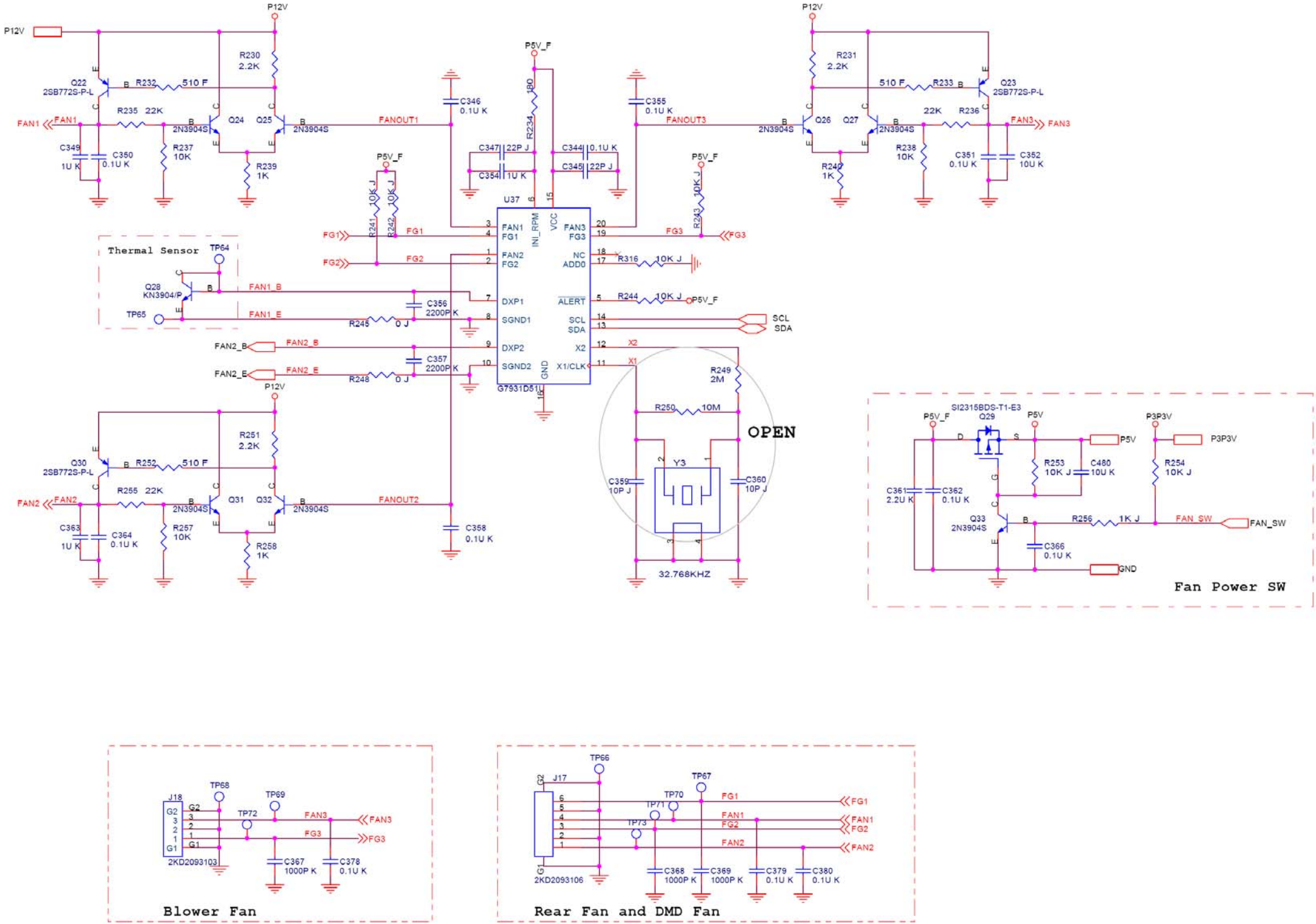

P12V
Q22
2SB772S-P-L
R232
510 F
R230
2.2K
R235
22K
FAN1
C349
1U K
C350
0.1U K
R237
10K
Q24
Q25
2N3904S
R239
1K
FANOUT1
C346
0.1U K
P5V_F
R234
180
C347
22P J
C354
1U K
C344
0.1U K
C345
22P J
C355
0.1U K
FANOUT3
R231
2.2K
Q23
2SB772S-P-L
R233
Q26
Q27
R236
22K
FAN3
R238
10K
R240
1K
C351
0.1U K
C352
10U K
R241
10K J
R242
10K J
U37
FAN1
FG1
FAN2
FG2
DXP1
SGND1
DXP2
SGND2
INI_RPM
VCC
GND
FAN3
FG3
NC
ADD0
ALERT
SCL
SDA
X2
X1/CLK
G7931D51
R243
10K J
R316
10K J
R244
10K J
FG1
FG2
FG3
Thermal Sensor
TP64
Q28
KN3904/P
TP65
FAN1_B
FAN1_E
R245
0 J
C356
2200P K
FAN2_B
FAN2_E
R248
0 J
C357
2200P K
R249
2M
R250
10M
OPEN
Y3
C359
10P J
C360
10P J
32.768KHZ
Q30
2SB772S-P-L
R252
510 F
R251
2.2K
R255
22K
FAN2
C363
1U K
C364
0.1U K
R257
10K
Q31
Q32
R258
1K
FANOUT2
C358
0.1U K
SI2315BDS-T1-E3
Q29
P5V
P3P3V
R253
10K J
C480
10U K
R254
10K J
C361
2.2U K
C362
0.1U K
Q33
2N3904S
R256
1K J
FAN_SW
C366
0.1U K
GND
Fan Power SW
J18
G2
G1
2KD2093103
TP68
TP69
TP72
C367
1000P K
C378
0.1U K
Blower Fan
J17
TP66
TP67
TP70
TP71
TP73
2KD2093106
C368
1000P K
C369
1000P K
C379
0.1U K
C380
0.1U K
Rear Fan and DMD Fan

Power board:

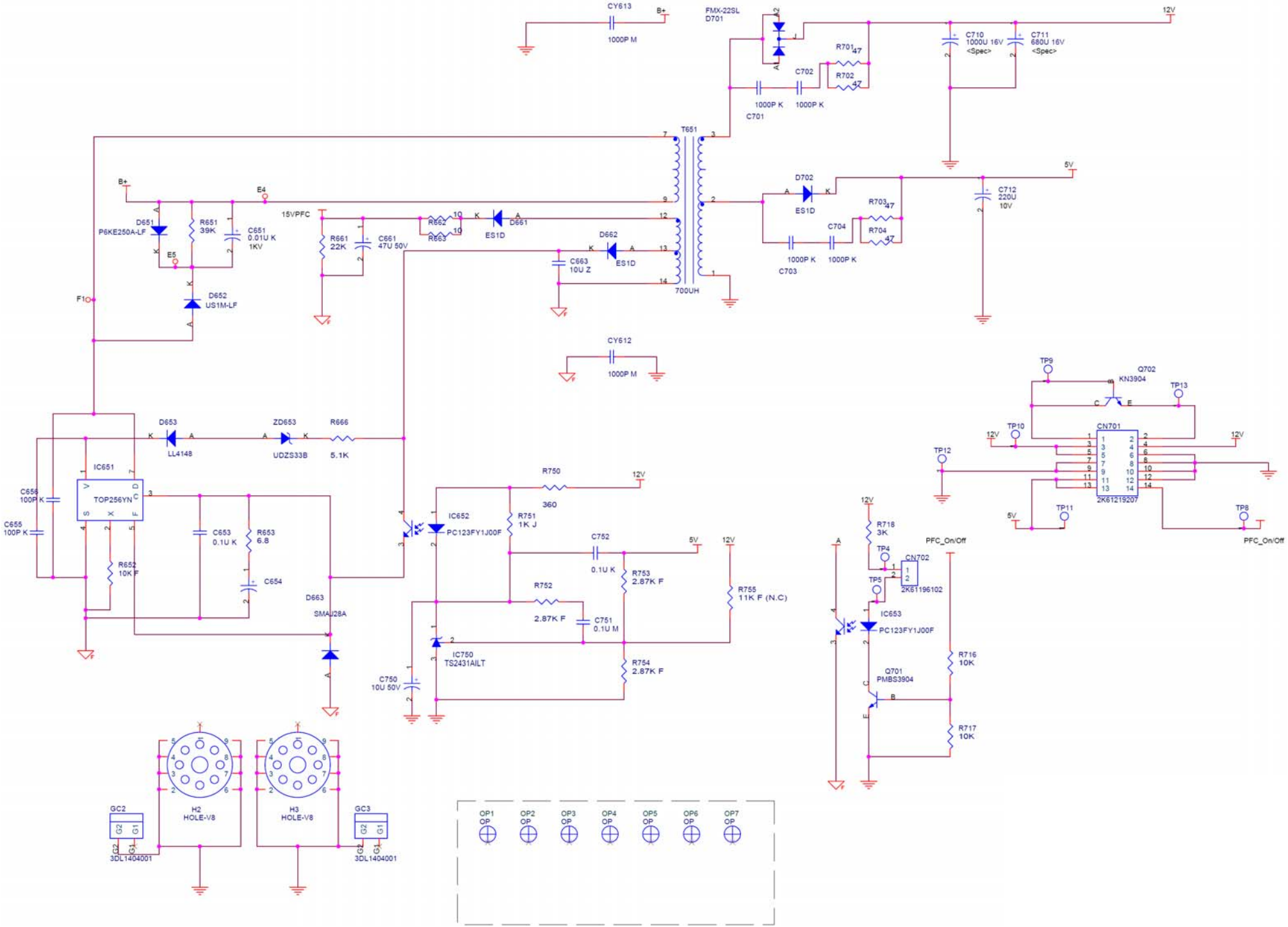
CY613
1000P M
B+
FMX-22SL
D701
C710
1000U 16V
<Spec>
C711
680U 16V
<Spec>
12V
R701
47
R702
47
C702
1000P K
C701
T651
D702
ES1D
R703
47
R704
47
C704
1000P K
C703
C712
220U
10V
5V
D651
P6KE250A-LF
R651
39K
C651
0.01U K
1KV
E4
E5
F1
D652
US1M-LF
15VPFC
R661
22K
C661
47U 50V
R662
10
R663
10
D661
ES1D
D662
ES1D
C663
10U Z
700UH
CY612
1000P M
D653
LL4148
ZD653
UDZS33B
R666
5.1K
IC651
TOP256YN
C656
100P K
C655
100P K
R652
10K F
C653
0.1U K
R653
6.8
C654
D663
SMAJ28A
R750
360
IC652
PC123FY1J00F
R751
1K J
C752
0.1U K
R753
2.87K F
R752
2.87K F
C751
0.1U M
R754
2.87K F
R755
11K F (N.C)
IC750
TS2431AILT
C750
10U 50V
TP9
Q702
KN3904
TP13
TP10
TP12
CN701
2K61219207
TP11
TP8
PFC_On/Off
R718
3K
TP4
CN702
2K61196102
TP5
IC653
PC123FY1J00F
Q701
PMBS3904
R716
10K
R717
10K
H2
HOLE-V8
H3
HOLE-V8
GC2
GC3
3DL1404001
OP1
OP2
OP3
OP4
OP5
OP6
OP7

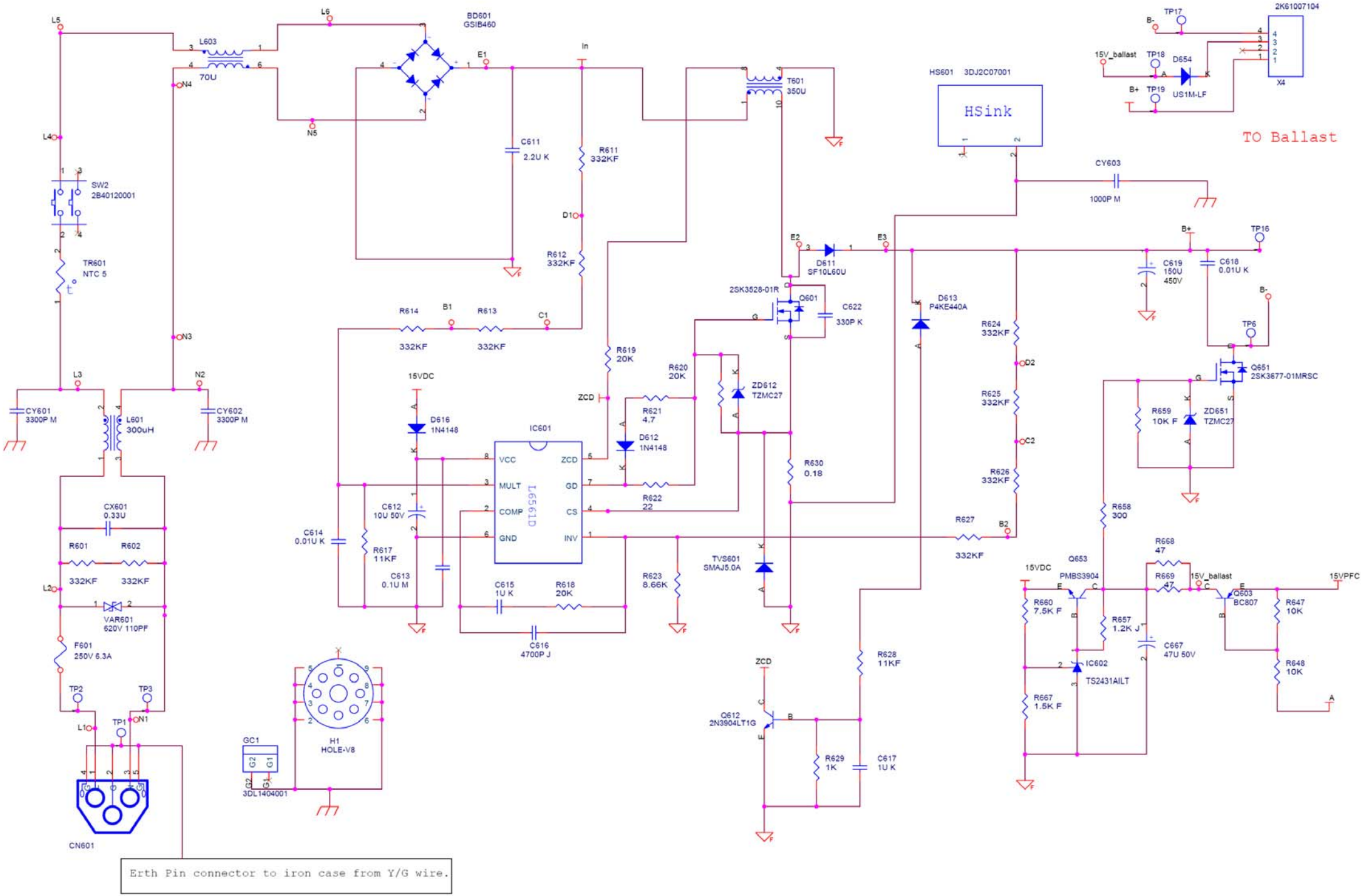
L5
L603
70U
L6
BD601
GSIB460
E1
In
T601
350U
N4
N5
C611
2.2U K
R611
332KF
D1
R612
332KF
HS601 3DJ2C07001
HSink
TP17
B-
2K61007104
15V_ballast
TP18
D654
US1M-LF
B+
TP19
X4
TO Ballast
CY603
1000P M
L4
SW2
2B40120107
TR601
NTC 5
N3
L3
N2
CY601
3300P M
L601
300uH
CY602
3300P M
E2
D611
SF10L60U
E3
2SK3528-01R
Q601
C622
330P K
D613
P4KE440A
C619
150U
450V
C618
0.01U K
B+
TP16
B-
TP6
R614
332KF
B1
R613
332KF
C1
R619
20K
R620
20K
ZCD
15VDC
D616
1N4148
R621
4.7
D612
1N4148
ZD612
TZMC27
IC601
VCC
MULT
COMP
GND
ZCD
GD
CS
INV
L6561D
R630
0.18
R622
22
C612
10U 50V
C614
0.01U K
R617
11KF
C613
0.1U M
C615
1U K
R618
20K
C616
4700P J
R623
8.66K
TVS601
SMAJ5.0A
R624
332KF
D2
R625
332KF
C2
R626
332KF
R627
332KF
B2
Q651
2SK3677-01MRSC
R659
10K F
ZD651
TZMC27
R658
300
R668
47
Q653
PMBS3904
15VDC
R669
47
15V_ballast
Q603
BC807
15VPFC
R660
7.5K F
R657
1.2K J
C667
47U 50V
R647
10K
IC602
TS2431AILT
R667
1.5K F
R648
10K
A
CX601
0.33U
R601
R602
332KF
332KF
L2
VAR601
620V 110PF
F601
250V 6.3A
TP2
TP3
TP1
N1
L1
CN601
GC1
G2
G1
3DL1404001
H1
HOLE-V8
ZCD
Q612
2N3904LT1G
R628
11KF
R629
1K
C617
1U K
Erth Pin connector to iron case from Y/G wire.

PCB Artwork—Main board:

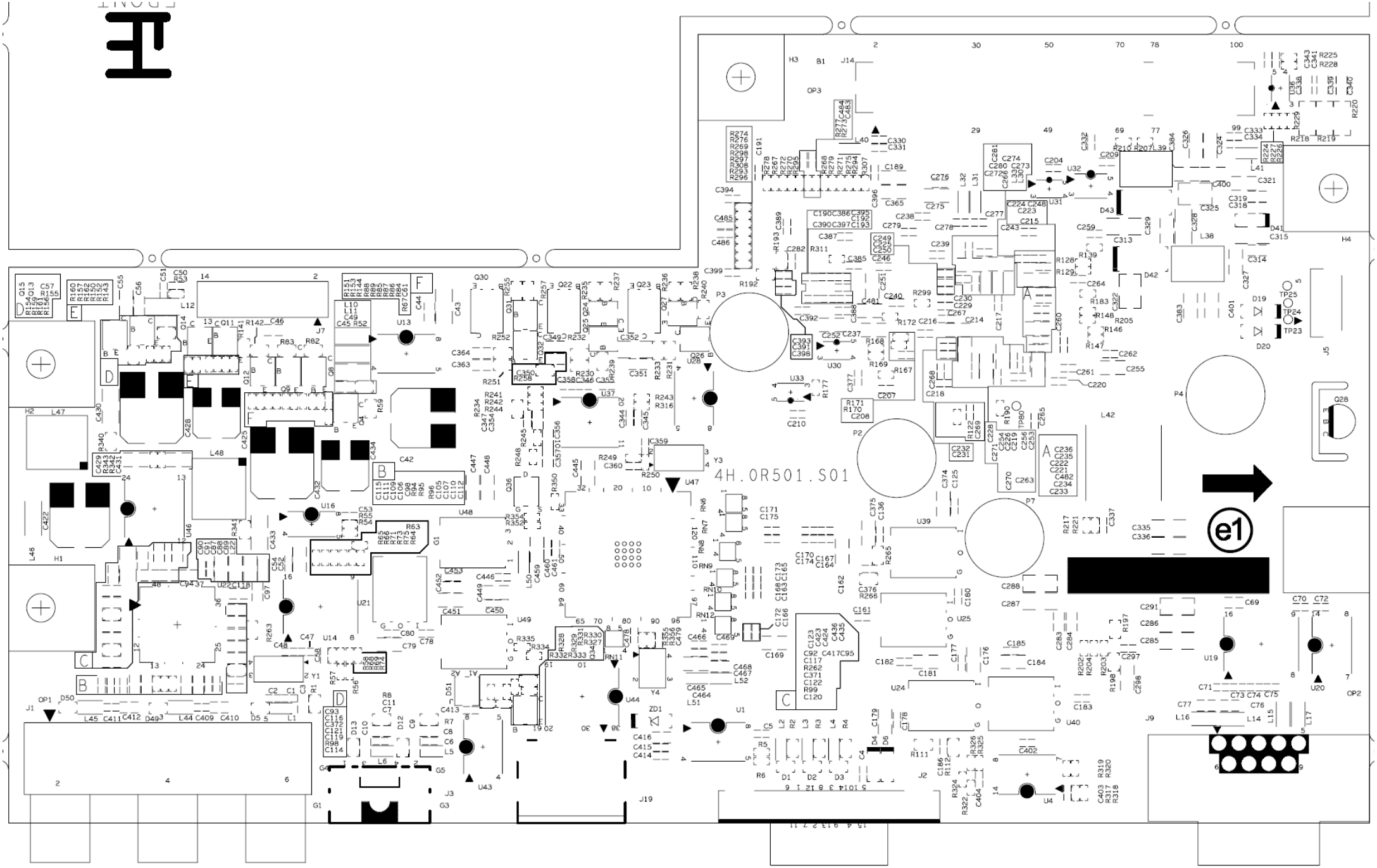

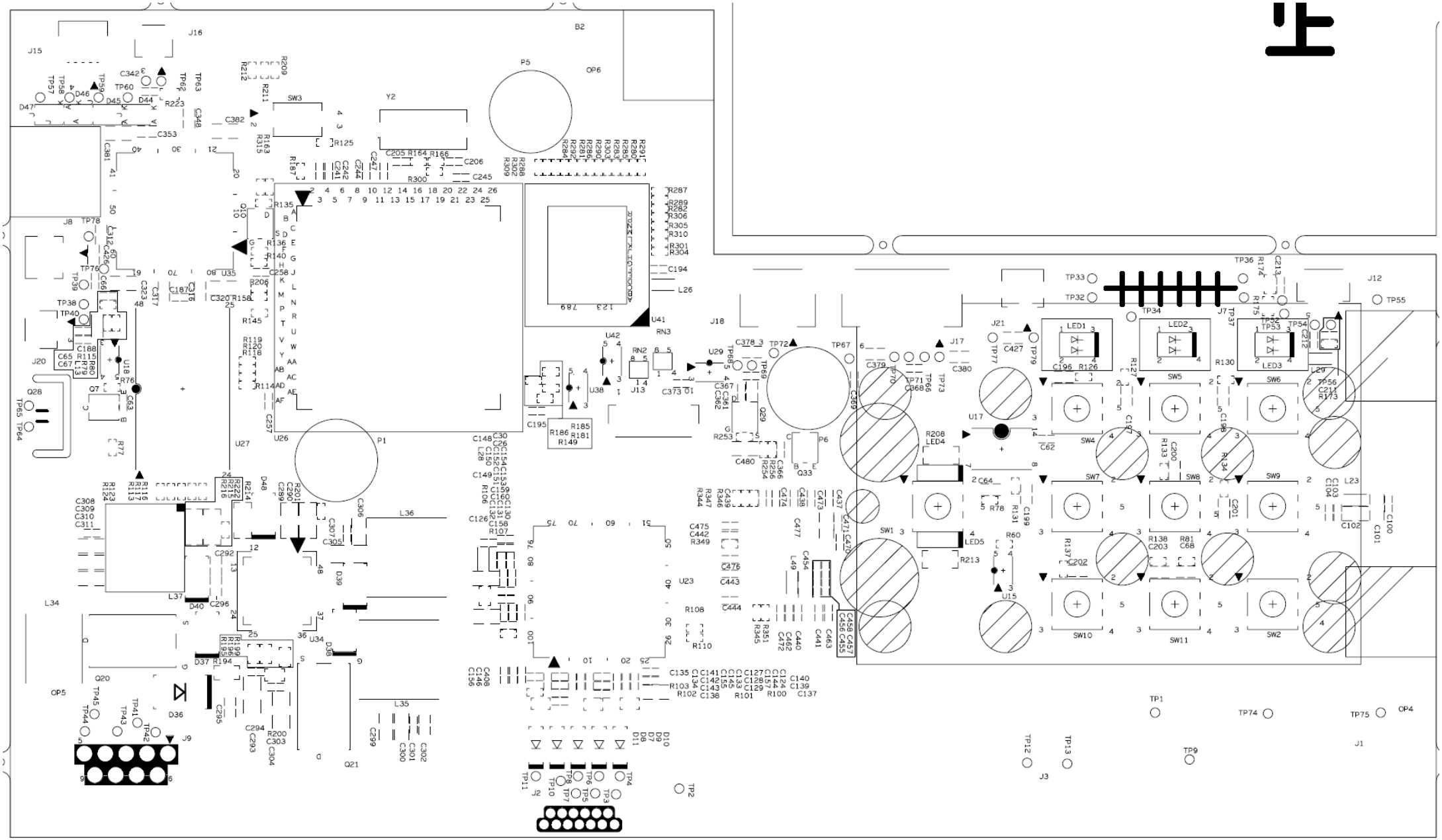

Power board:

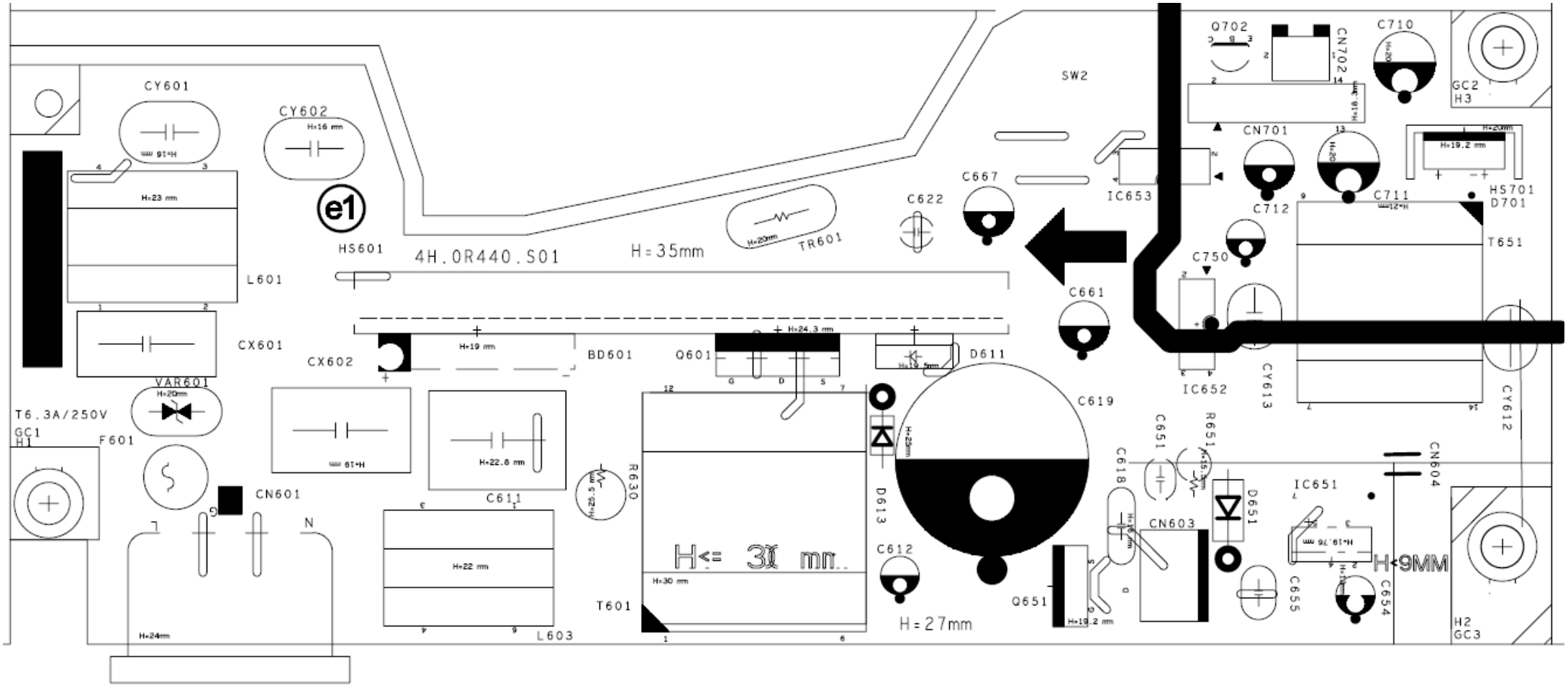

CY601
CY602
H=16 mm
H=23 mm
e1
HS601
4H.0R440.S01
H=35mm
TR601
C622
C667
SW2
IC653
Q702
CN702
C710
GC2
H3
CN701
C712
C711
HS701
D701
T651
C750
C661
L601
CX601
CX602
H=19 mm
BD601
Q601
H=24.3 mm
D611
IC652
CY613
CY612
VAR601
T6.3A/250V
GC1
H1
F601
C619
C651
R651
C618
CN604
IC651
D651
CN603
CN601
C611
H=22.8 mm
R630
D613
H<= 30 mm
H=30 mm
C612
H=27mm
Q651
C655
C654
H<9MM
H2
GC3
T601
L603
H=22 mm
H=24mm

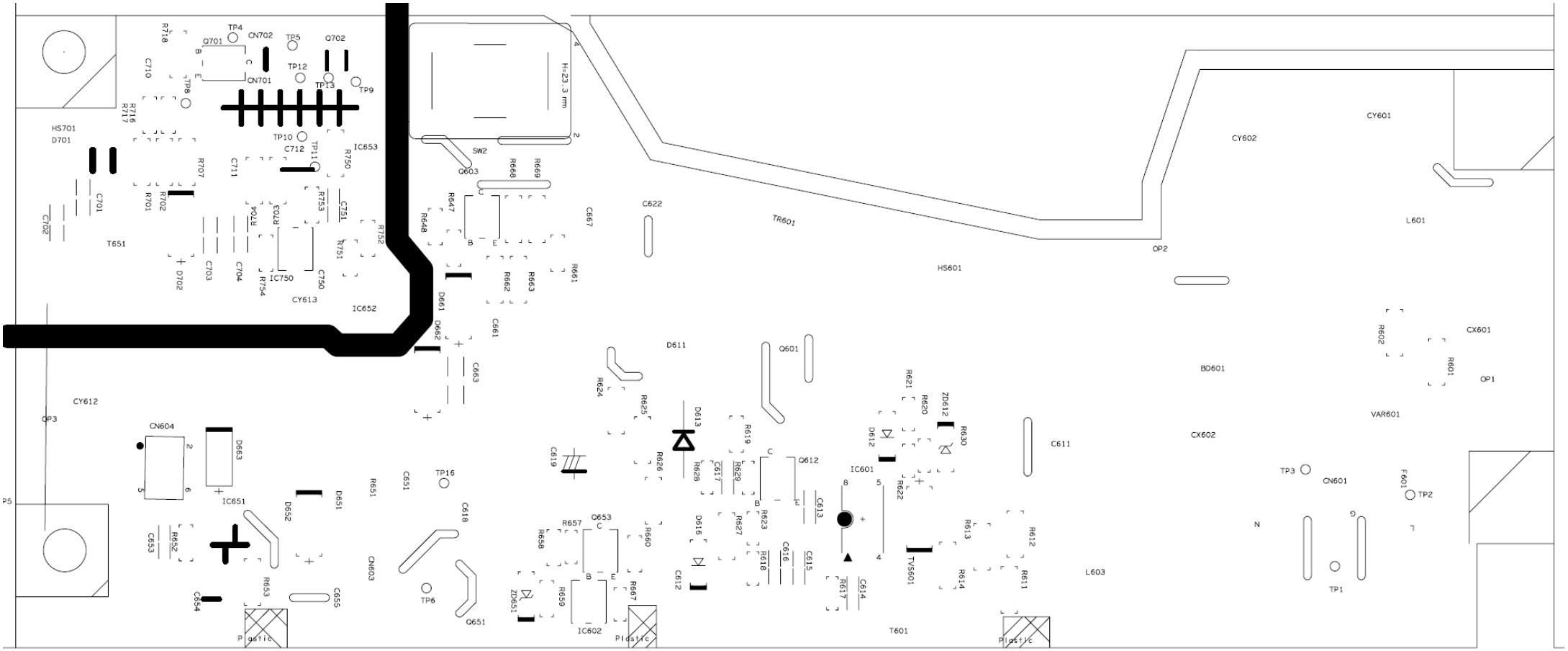

TP4
CN702
TP5
Q702
Q701
TP12
CN701
TP13
TP9
TP8
TP10
C712
TP11
IC653
HS701
D701
R718
R716
R717
C710
R707
C711
R750
R701
R702
R753
C751
R704
R703
R752
R751
C701
C702
T651
D702
C703
C704
R754
IC750
C750
CY613
IC652
H=23.3 mm
SW2
Q603
R668
R669
R647
R648
C667
C622
TR601
HS601
OP2
CY601
CY602
L601
R662
R663
R661
D661
D662
C661
C663
D611
Q601
R624
R625
D613
R619
R621
R620
ZD612
R630
D612
C611
BD601
R602
CX601
R601
OP1
VAR601
CX602
CY612
OP3
CN604
D663
IC651
D652
D651
R651
C651
TP16
C618
C619
R626
R628
C617
R629
Q612
IC601
R622
C613
TP3
CN601
F601
TP2
C653
R652
R657
Q653
R658
R660
D616
R627
R623
R618
C616
C615
R613
R612
TVS601
R614
R611
L603
C654
R653
C655
CN603
TP6
Q651
ZD651
R659
R667
IC602
C612
R617
C614
T601
TP1
Plastic
Plastic
Plastic