I. OTHERS

BLOCK DIAGRAMS I-2
OVERALL I-2

CIRCUIT DIAGRAMS I-3
DC-PCA I-3
PW-PCA I-4
CAM-PCA I-6
FL-PCA I-7
MC-PCA (OVERALL) I-8
MC-PCA (ASIC) I-9
MC-PCA (SICS) I-10
MC-PCA (SDRAM) I-11
MC-PCA (USB) I-12
MC-PCA (FR) I-13
MC-PCA (SM) I-14
MC-PCA (LENS) I-15
MC-PCA (TFT) I-16
MC-PCA (VIDEO) I-17
MC-PCA (SW DIODE) I-18
MC-PCA (SW-FPCA) I-19
MC-PCA (SUB-FPC) I-20

MOUNTING DIAGRAMS I-21
DC-PCA, FL-PCA I-21
PW-PCA I-22
CAM-PCA I-24
MC-PCA I-25
SUB-FPCA I-27

X-1/X-2/C-50ZOOM BLOCK DIAGRAM: OVERALL

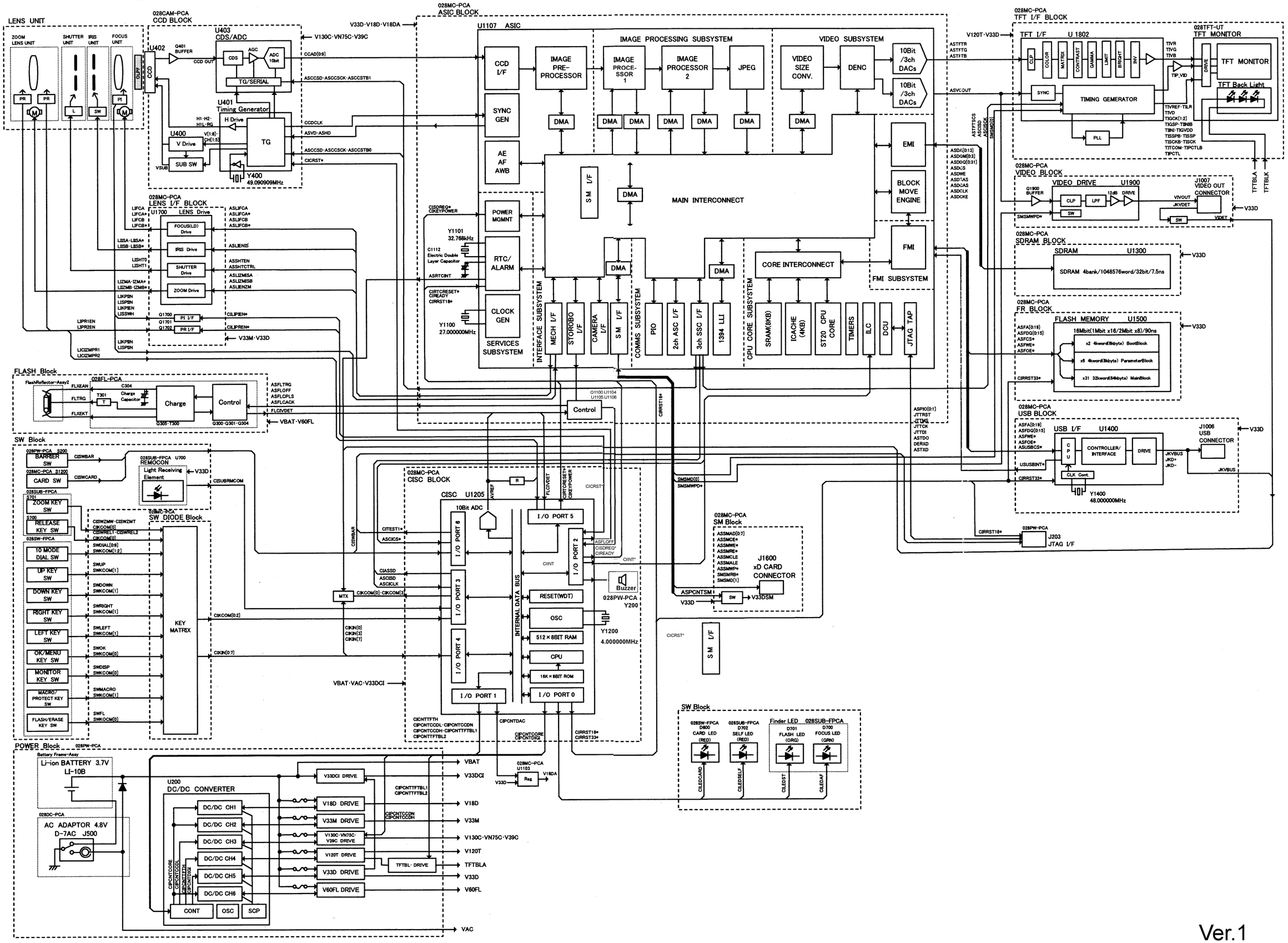

Ver.1

X-1/X-2/C-50ZOOM CIRCUIT DIAGRAM : DC-PCA

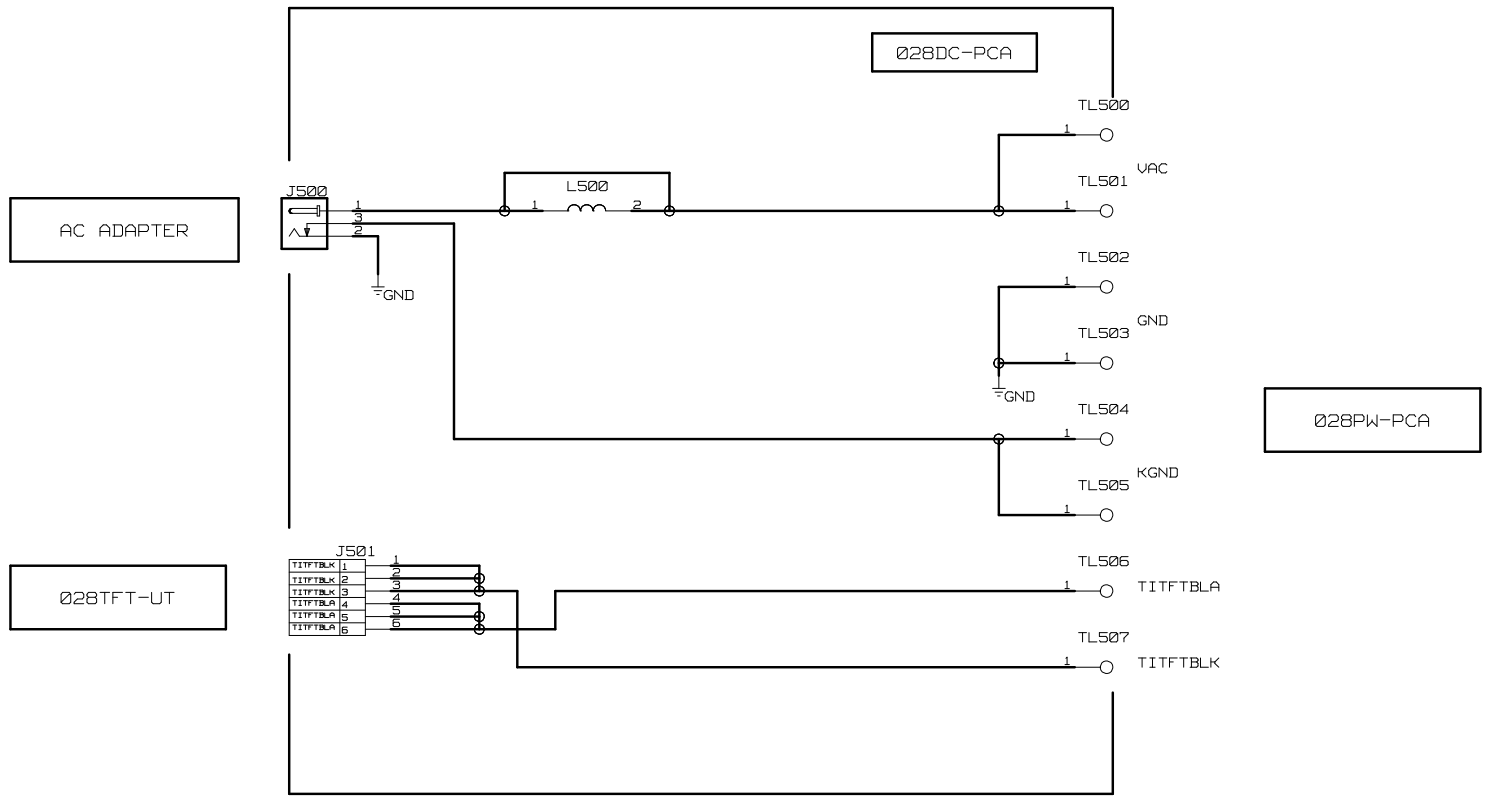

X-1/X-2/C-50ZOOM CIRCUIT DIAGRAM : PW-PCA (1/2)

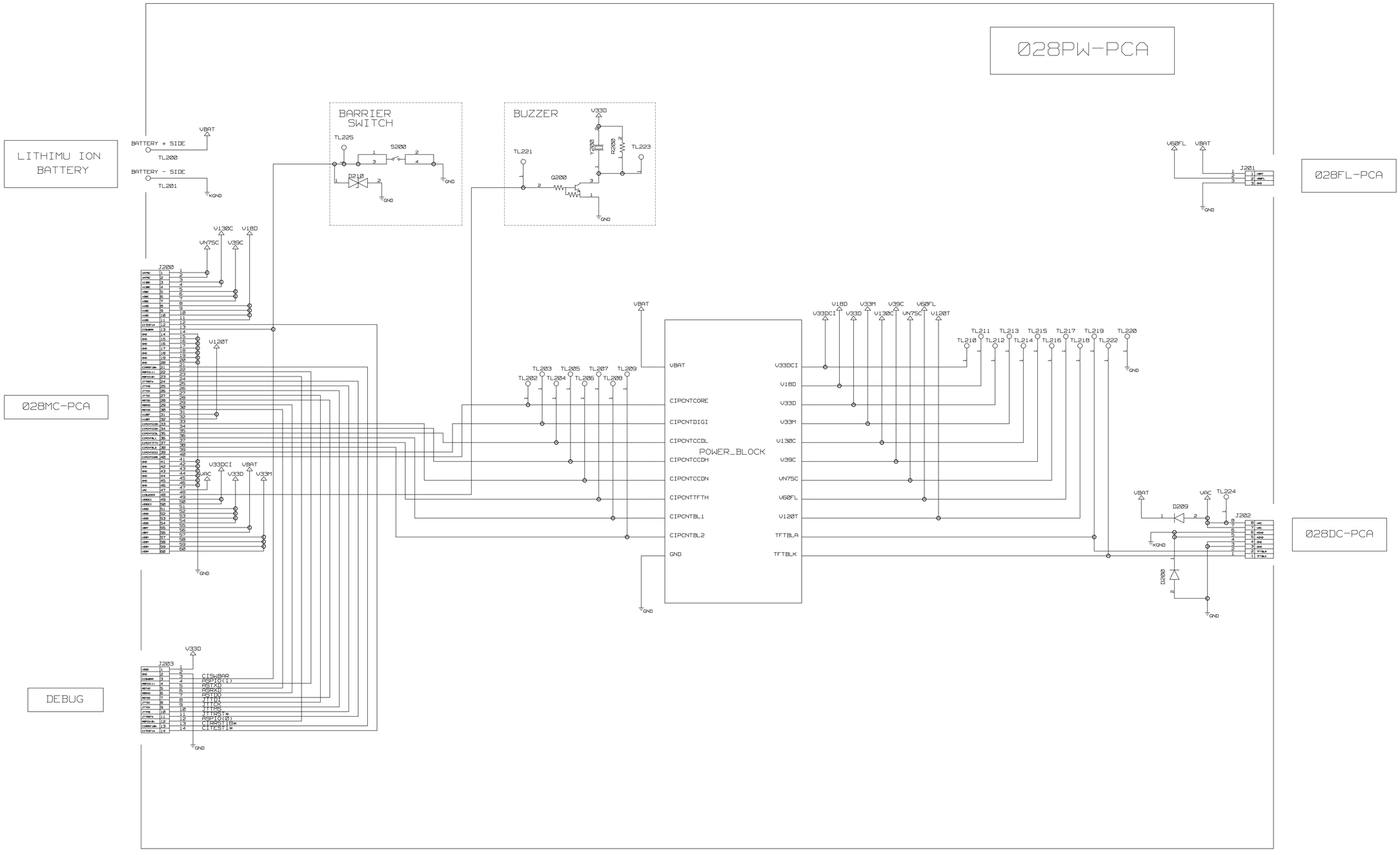

Ver.1

X-1/X-2/C-50ZOOM CIRCUIT DIAGRAM : PW-PCA (2/2)

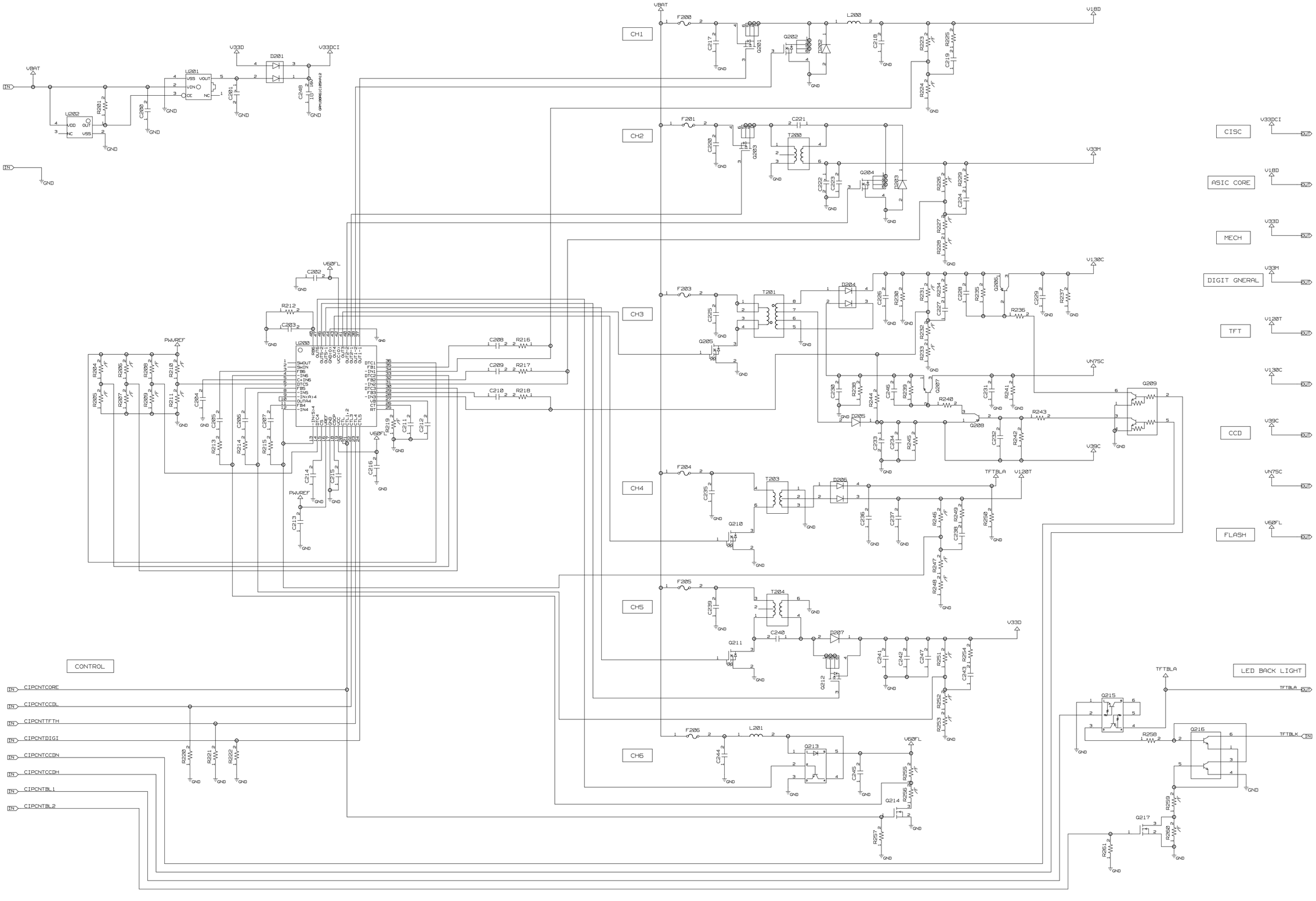

X-1/X-2/C-50ZOOM CIRCUIT DIAGRAM : CAM-PCA

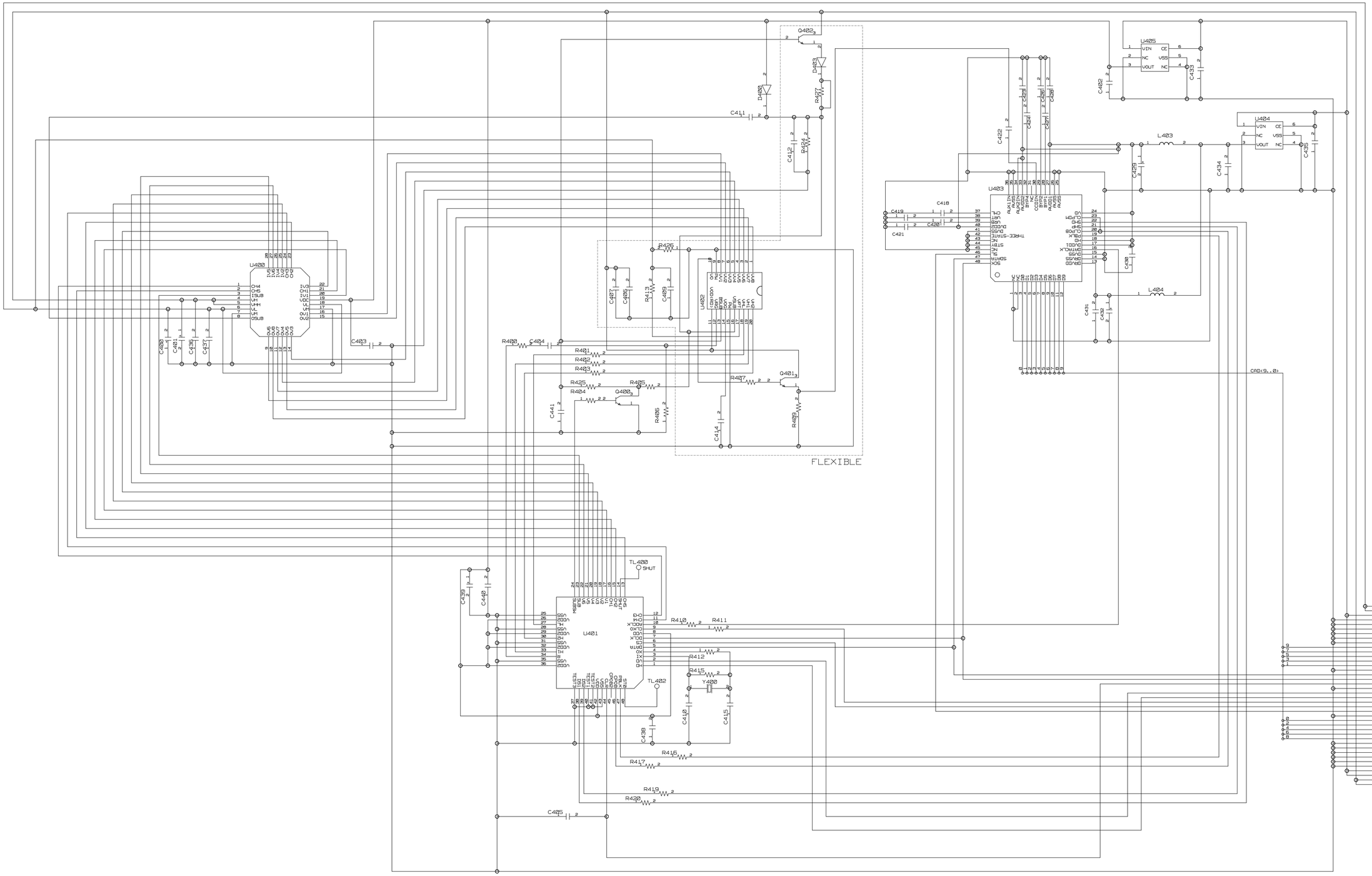

X-1/X-2/C-50ZOOM CIRCUIT DIAGRAM : FL-PCA

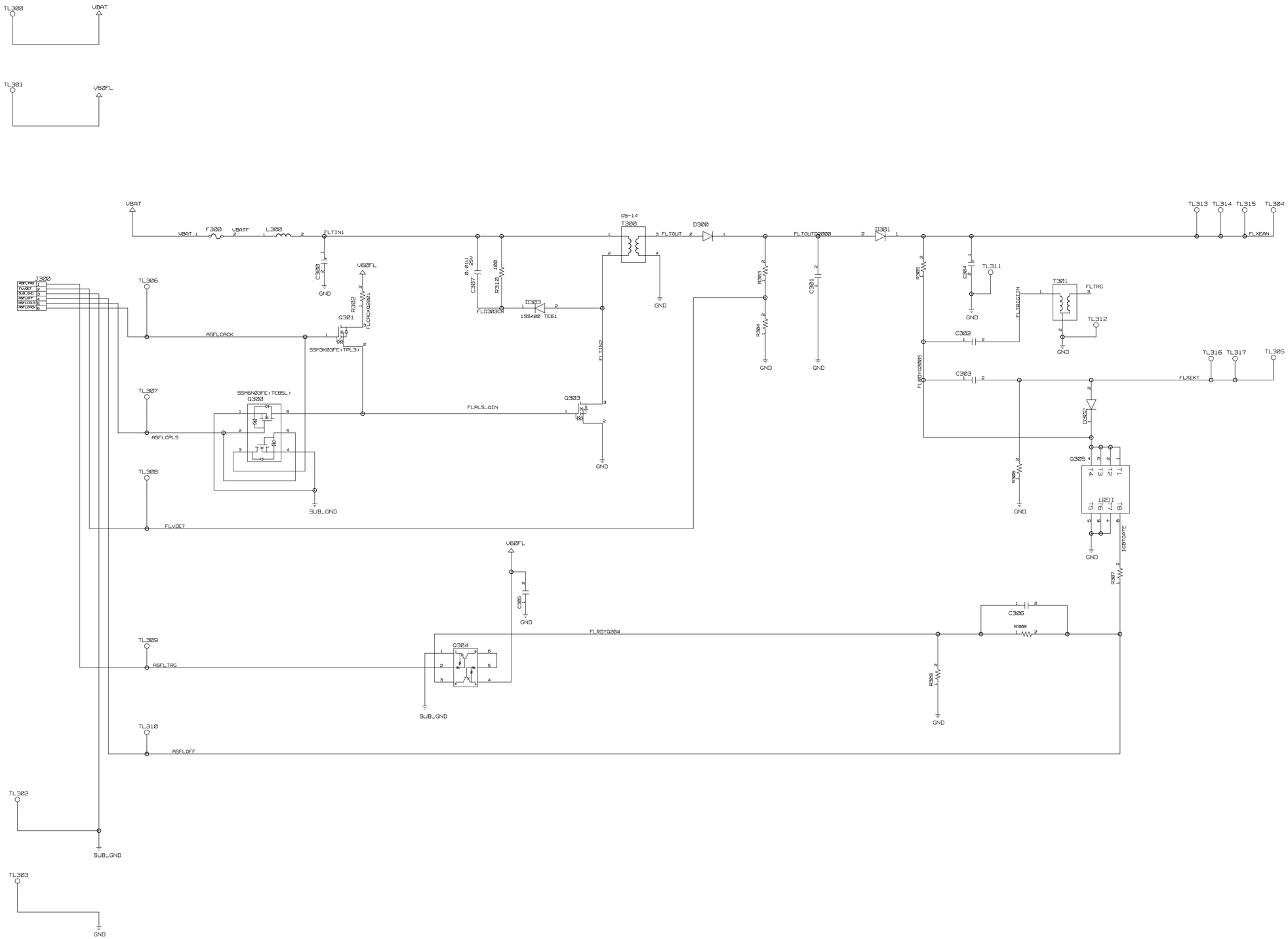

Ver.1

X-1/X-2/C-50ZOOM CIRCUIT DIAGRAM : MC-PCA (OVERALL)

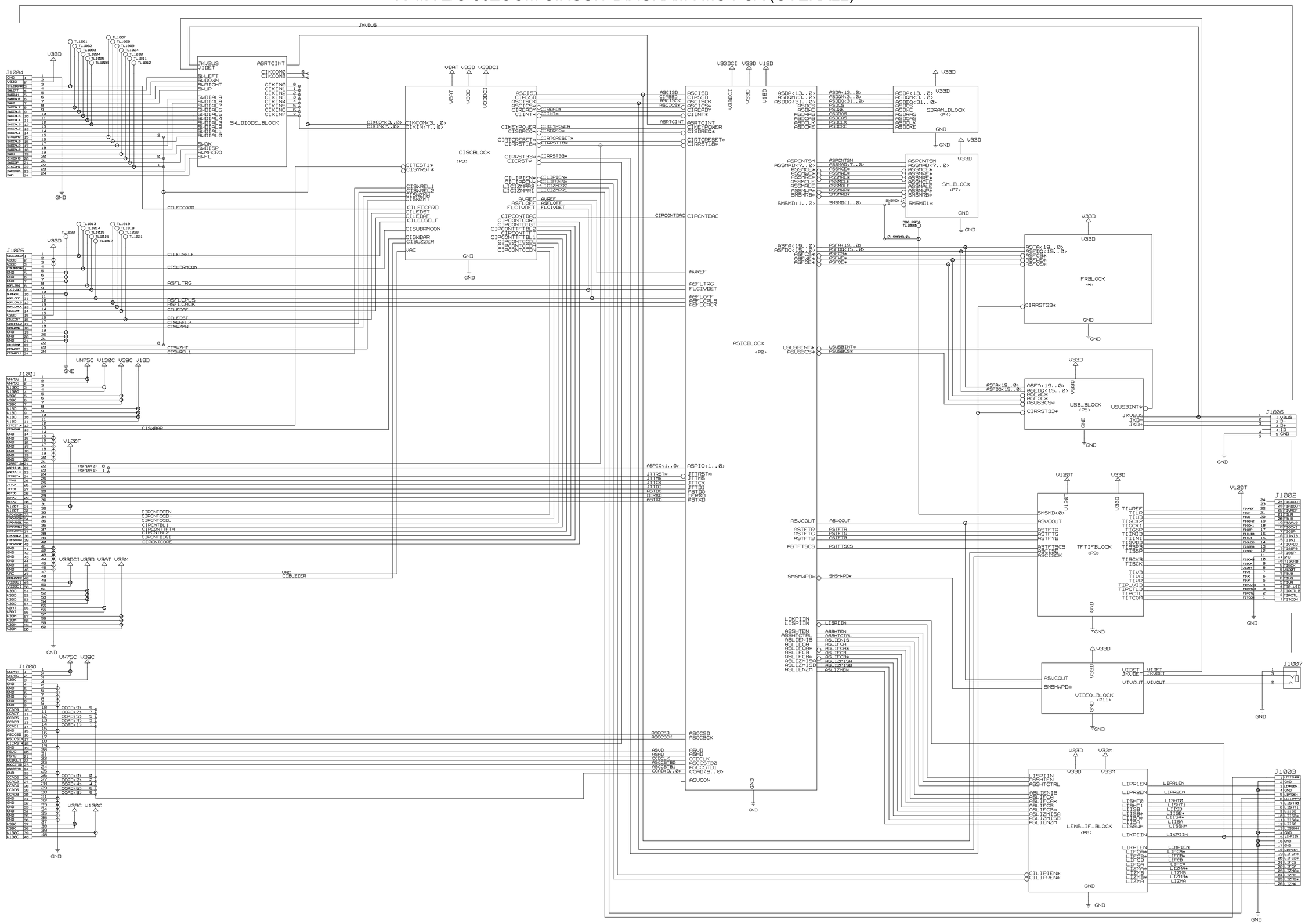

Ver.1

X-1/X-2/C-50ZOOM CIRCUIT DIAGRAM : MC-PCA (ASIC)

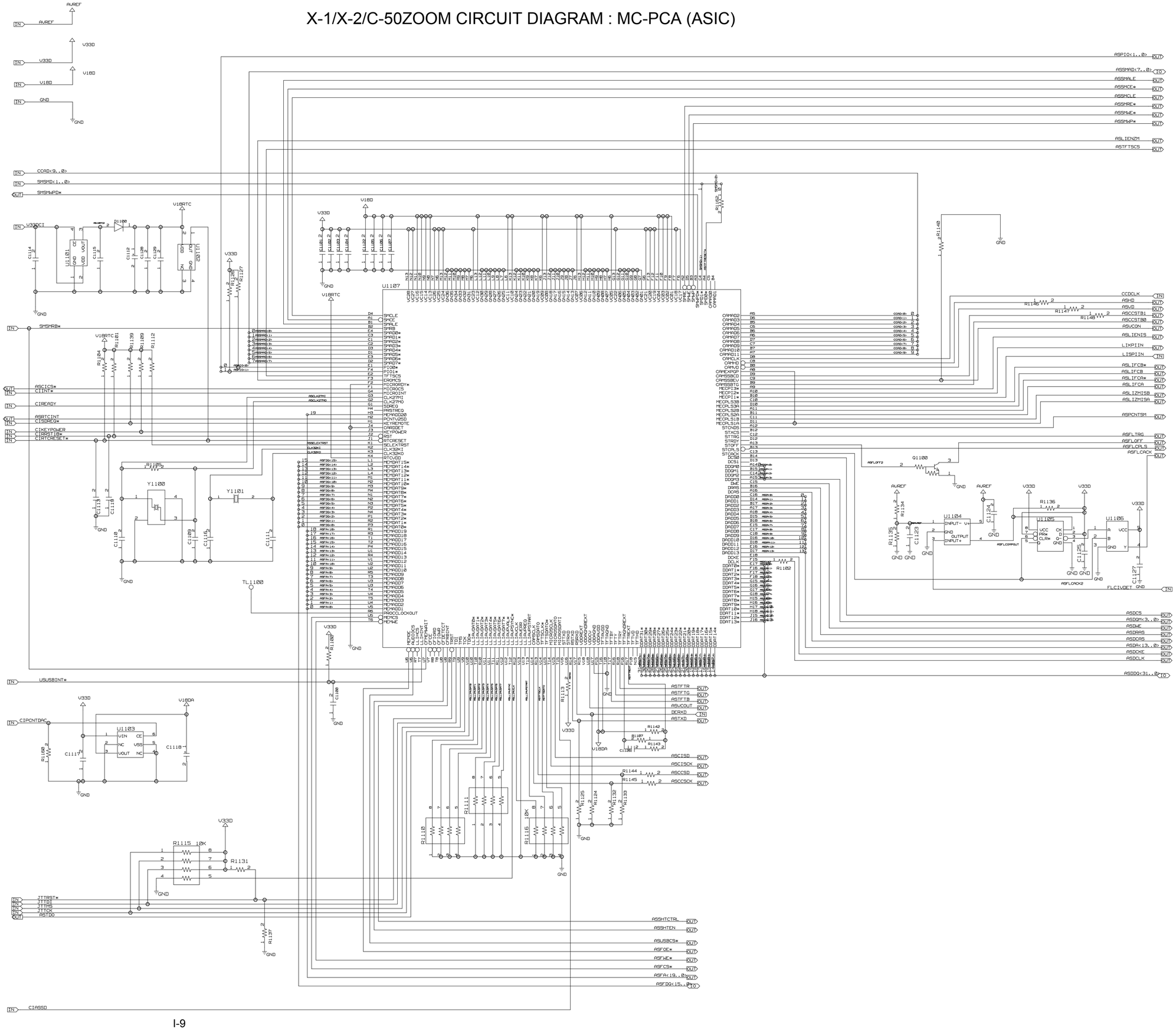

Ver.1

X-1/X-2/C-50ZOOM CIRCUIT DIAGRAM : MC-PCA (CISC)

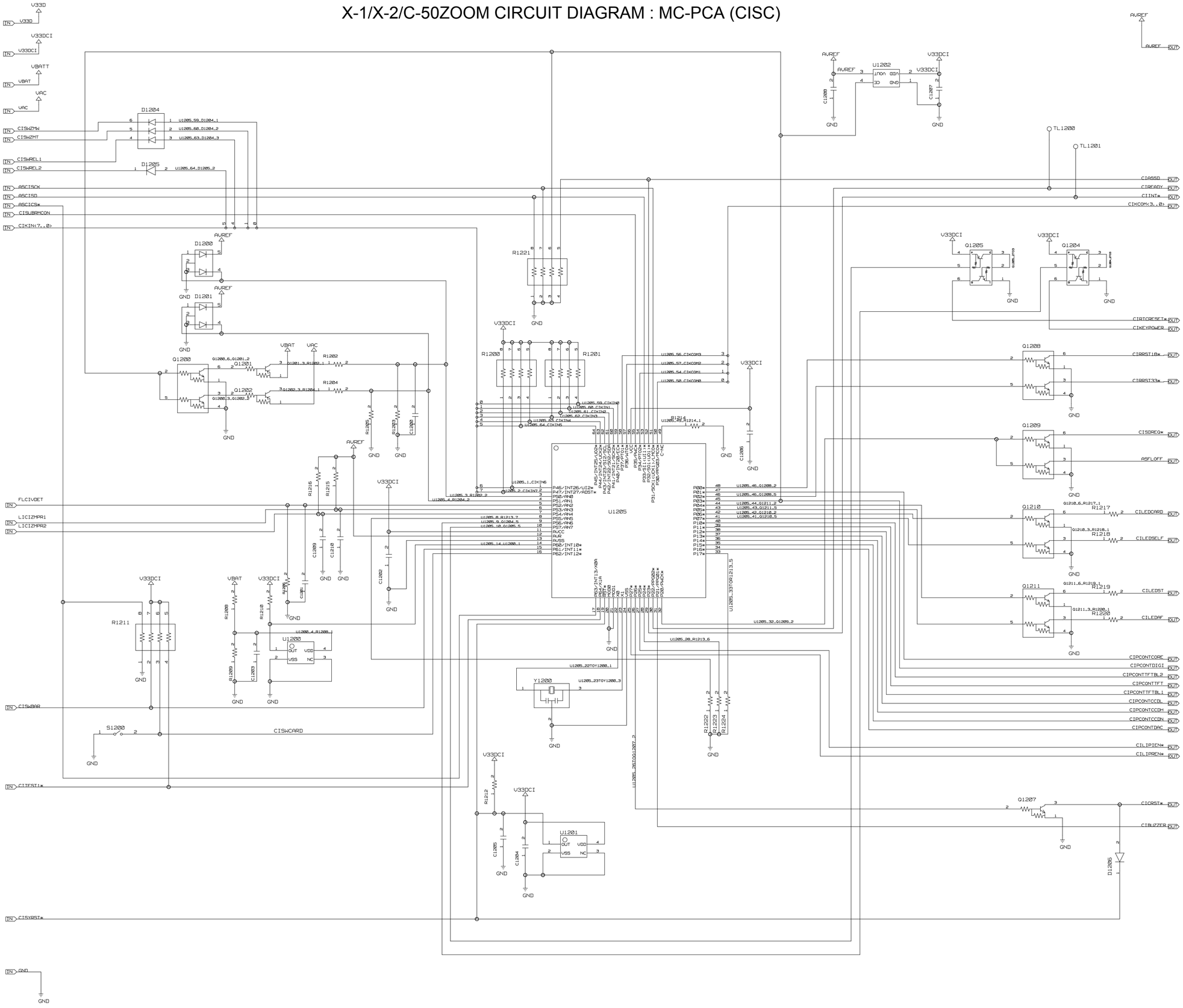

Ver.1

X-1/X-2/C-50ZOOM CIRCUIT DIAGRAM : MC-PCA (SDRAM)

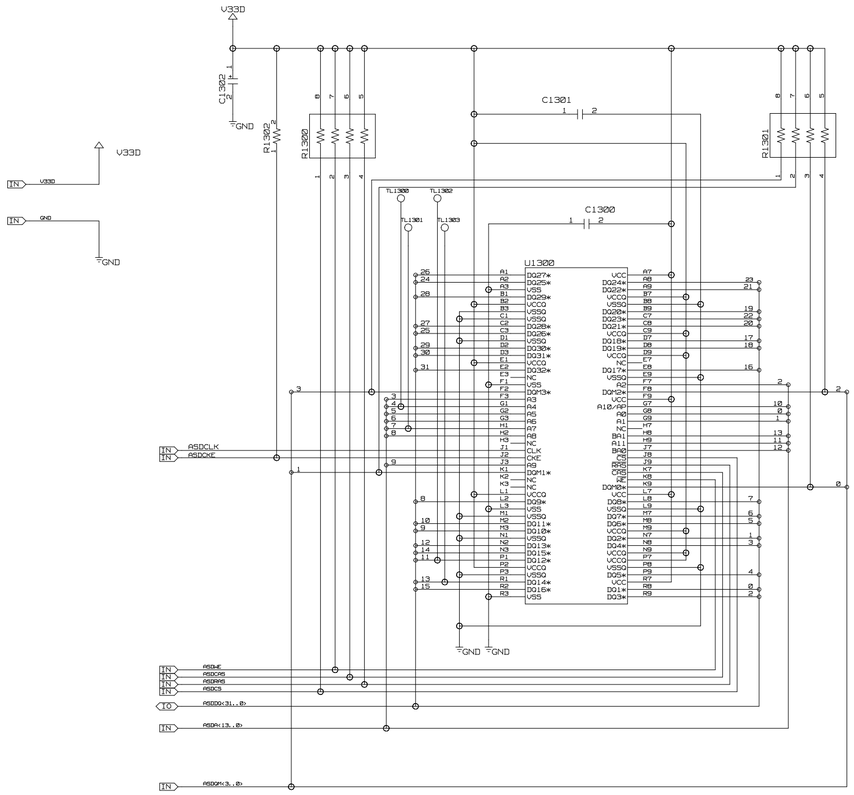

X-1/X-2/C-50ZOOM CIRCUIT DIAGRAM : MC-PCA (USB)

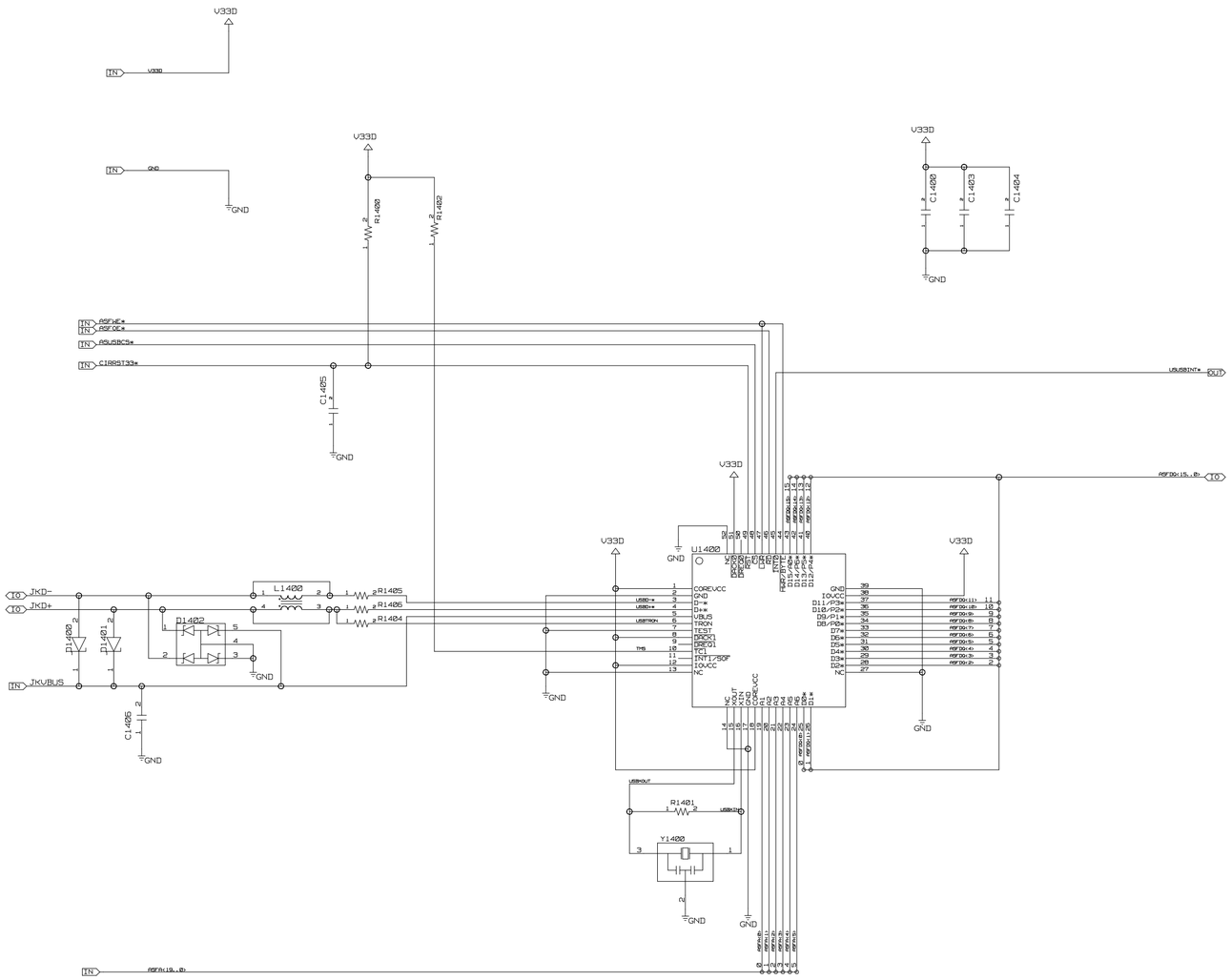

Ver.1

X-1/X-2/C-50ZOOM CIRCUIT DIAGRAM : MC-PCA (FR)

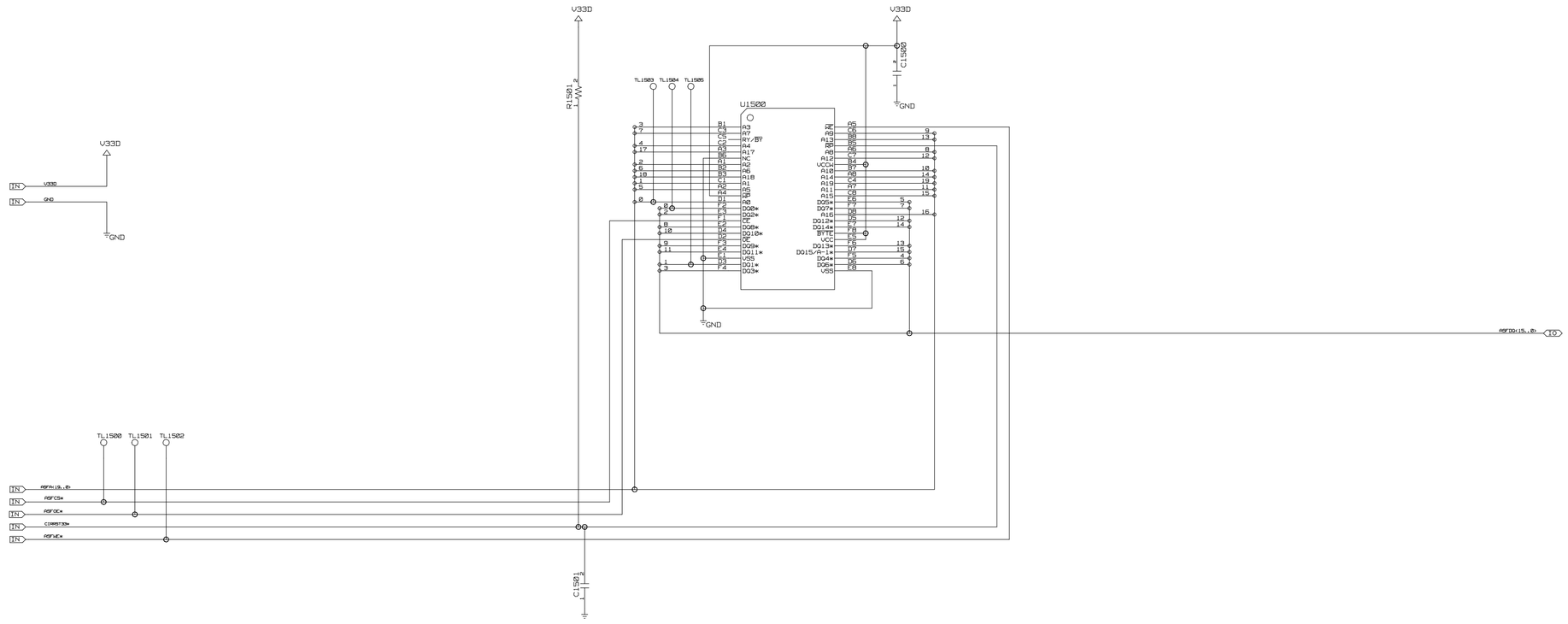

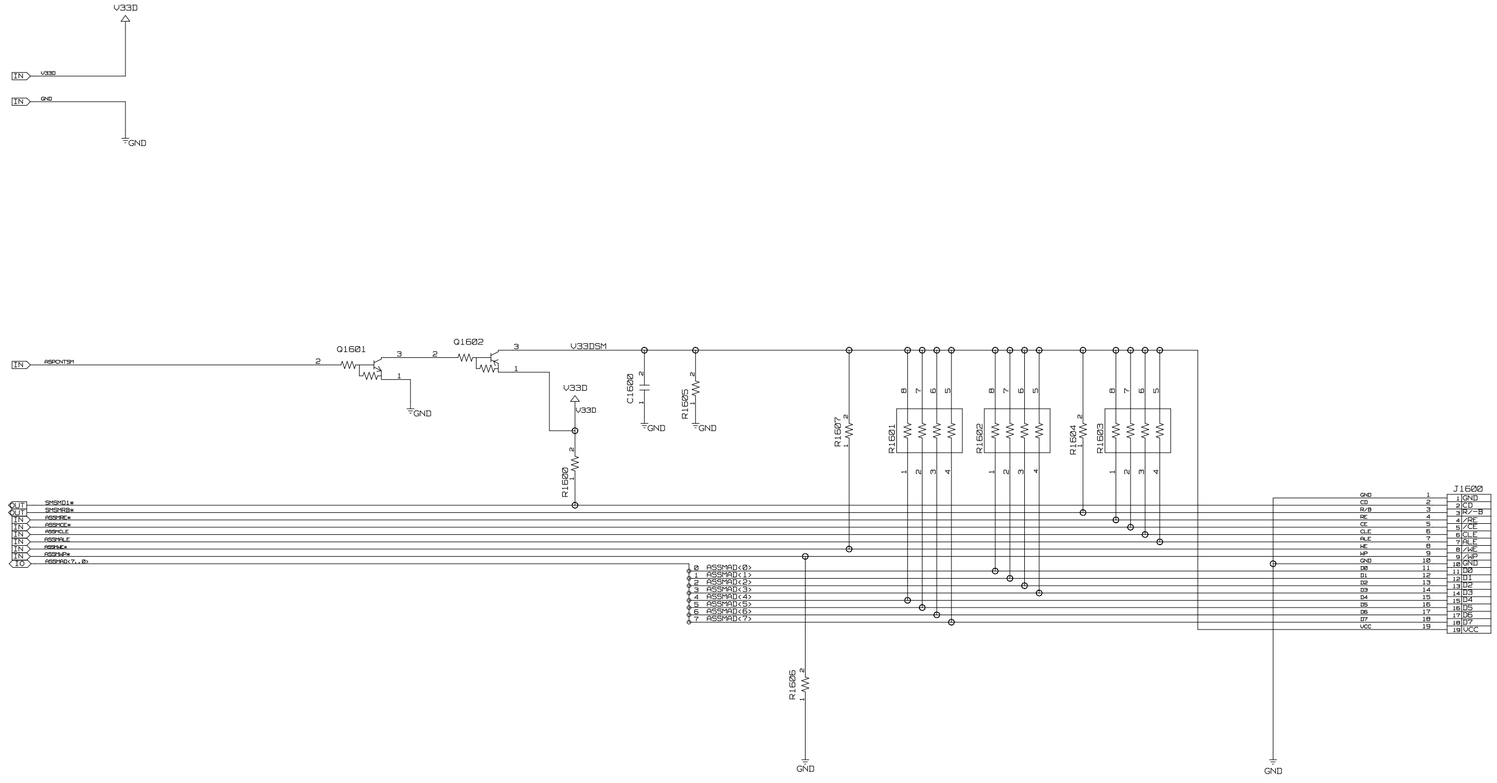
V33D
V33D
GND
GND
ASPONTSM
Q1601
Q1602
V33DSM
V33D
V33D
C1603
R1605
GND
GND
R1603
R1607
R1601
R1602
R1604
R1603
SMSRD1*
SMSRD0*
ASSRWE*
ASSRCS*
ASSRCLE
ASSRALE
ASSRWE*
ASSRWP*
ASSRAD(7..0)
ASSRAD(0)
ASSRAD(1)
ASSRAD(2)
ASSRAD(3)
ASSRAD(4)
ASSRAD(5)
ASSRAD(6)
ASSRAD(7)
R1605
GND
GND
J1600
GND
CD
R/B
RE
CE
CLE
ALE
WE
WP
GND
D0
D1
D2
D3
D4
D5
D6
D7
VCC
GND
/RE
/CE
CLE
ALE
/WE
/WP
GND
D0
D1
D2
D3
D4
D5
D6
D7
VCC

Ver.1

X-1/X-2/C-50ZOOM CIRCUIT DIAGRAM : MC-PCA (LENS)

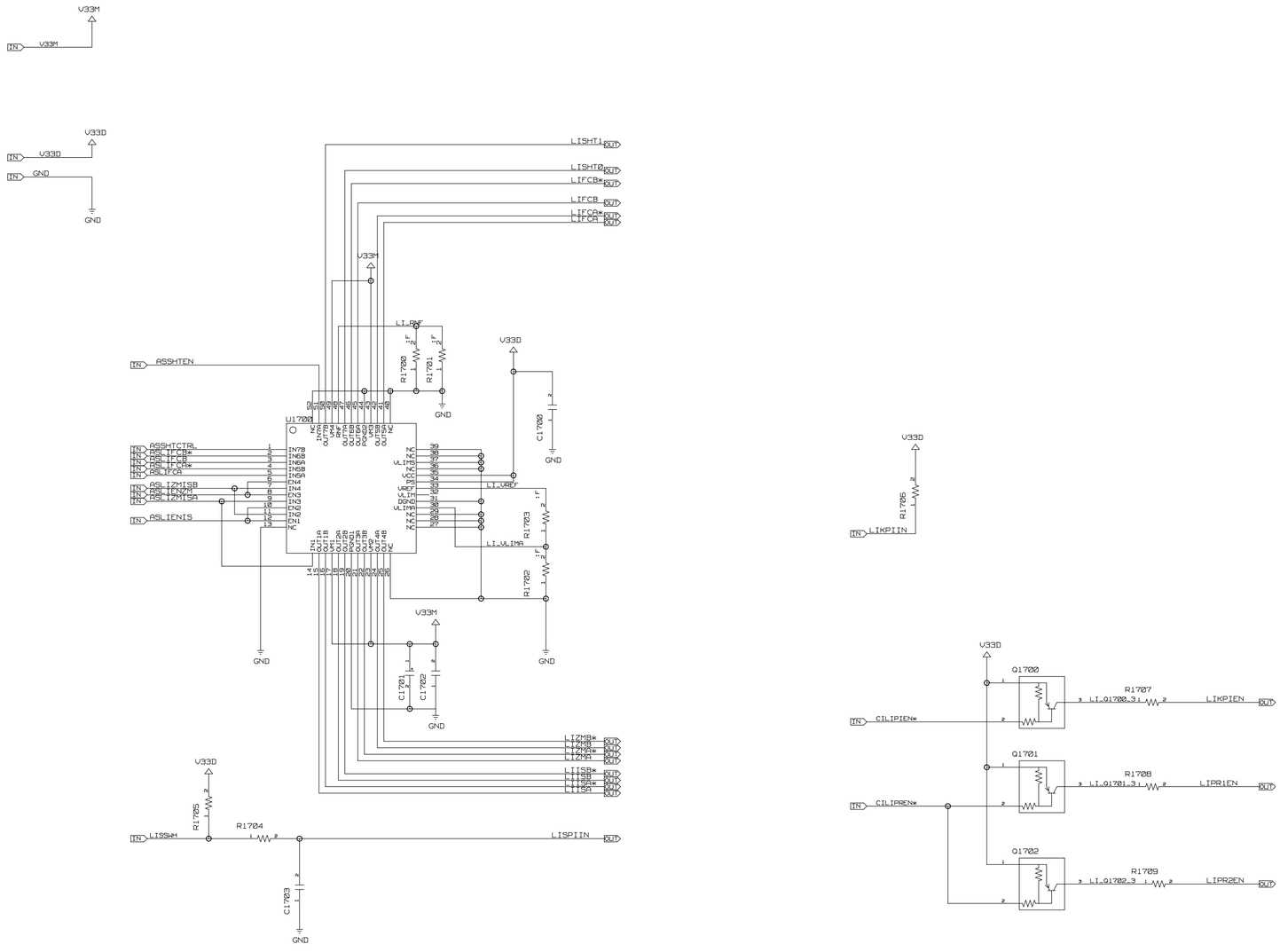

X-1/X-2/C-50ZOOM CIRCUIT DIAGRAM : MC-PCA (TFT)

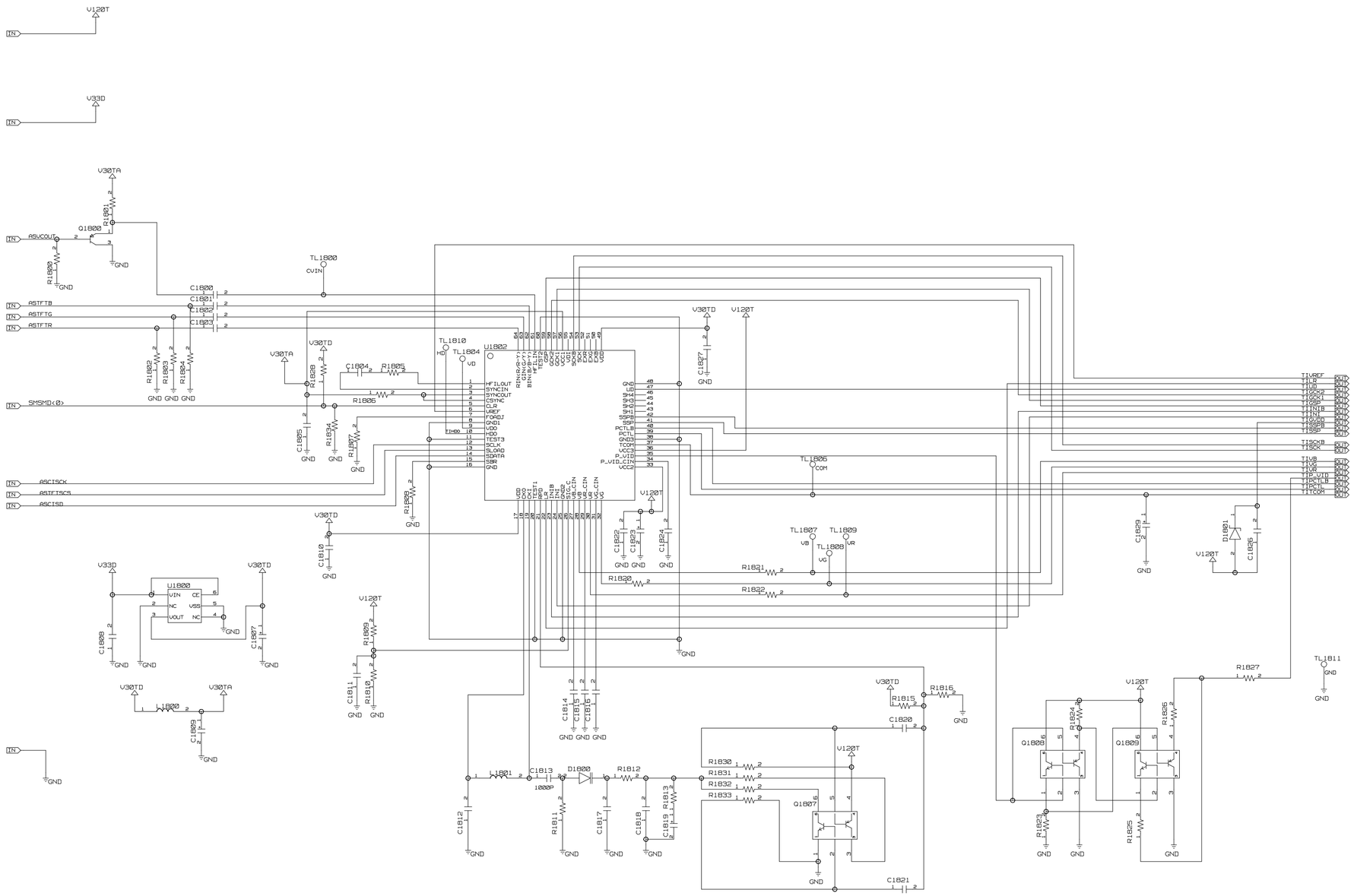

Ver.1

X-1/X-2/C-50ZOOM CIRCUIT DIAGRAM : MC-PCA (VIDEO)

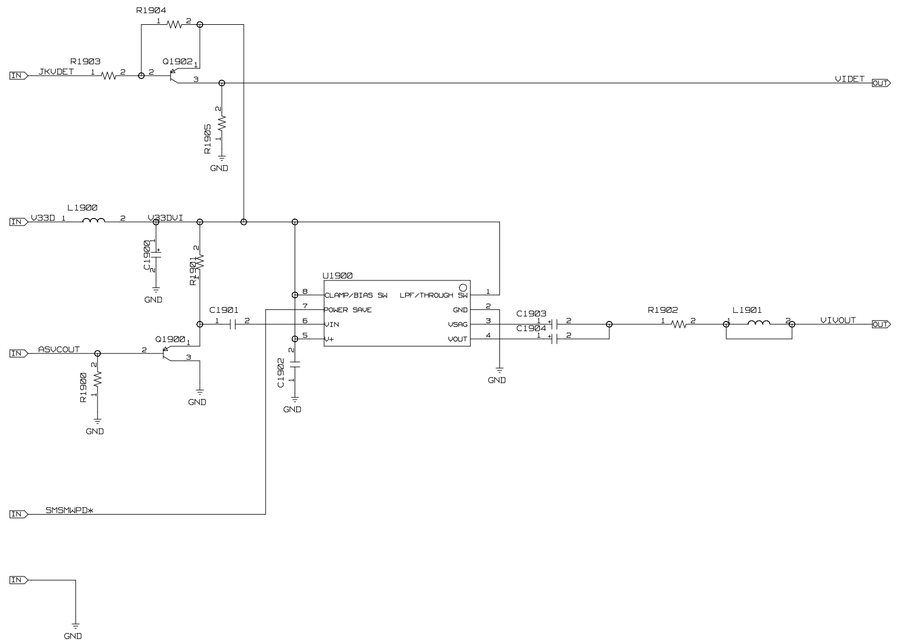

X-1/X-2/C-50ZOOM CIRCUIT DIAGRAM : MC-PCA (SW DIODE)

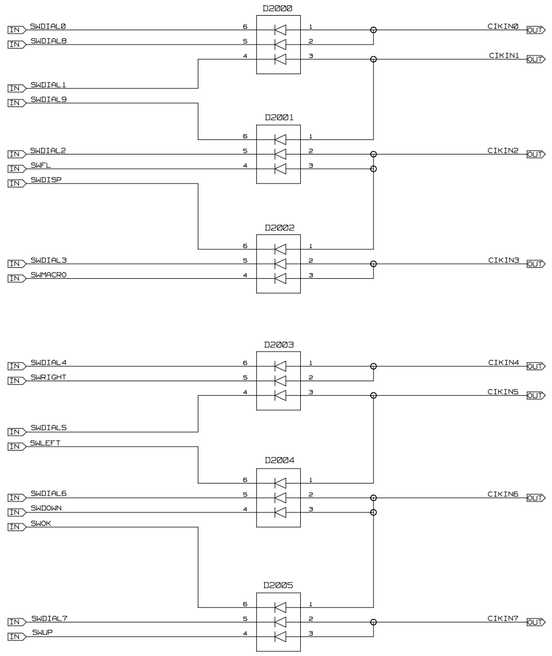

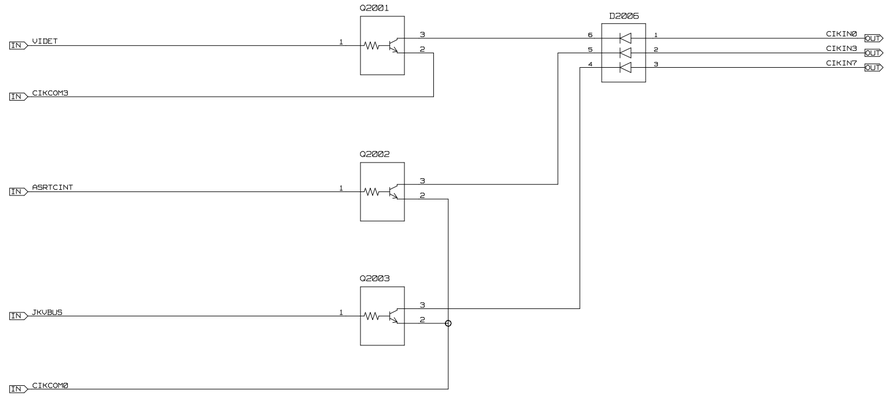

Ver.1

X-1/X-2/C-50ZOOM : SW-FPCA

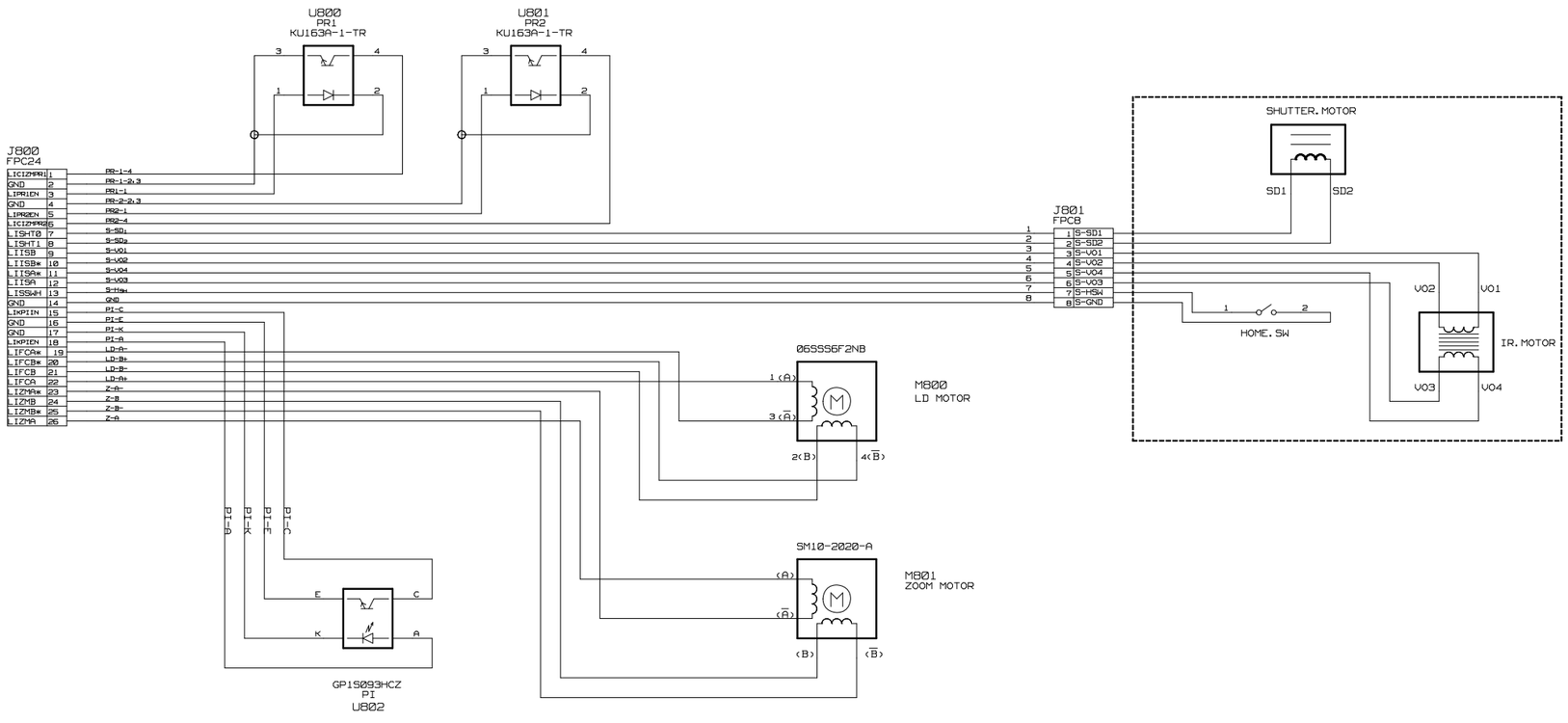

X-1/X-2/C-50ZOOM CIRCUIT DIAGRAM : SUB-FPCA

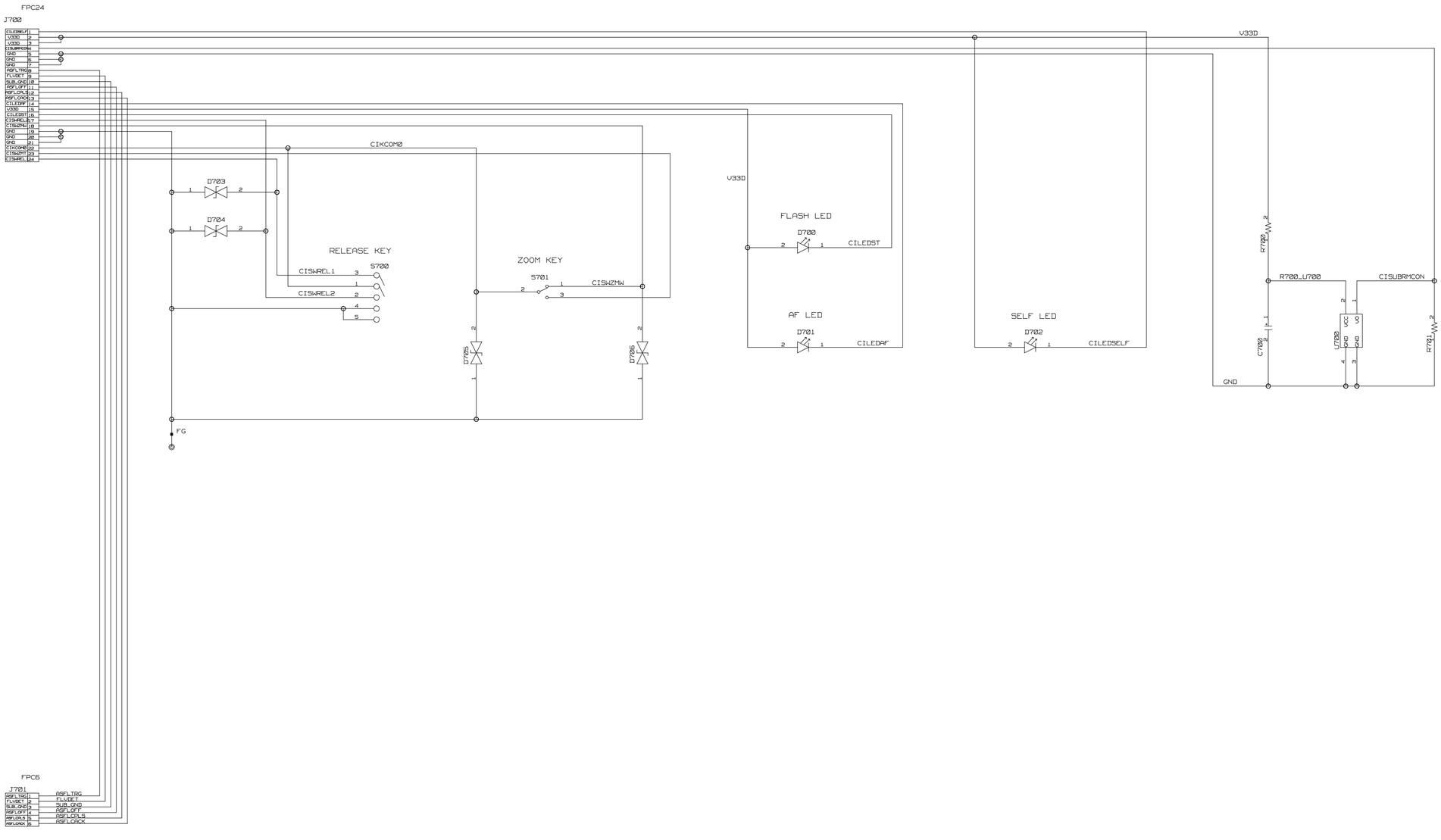

Ver.1

X-1/X-2/C-50ZOOM MOUNTING DIAGRAM : DC-PCA, FL-PCA

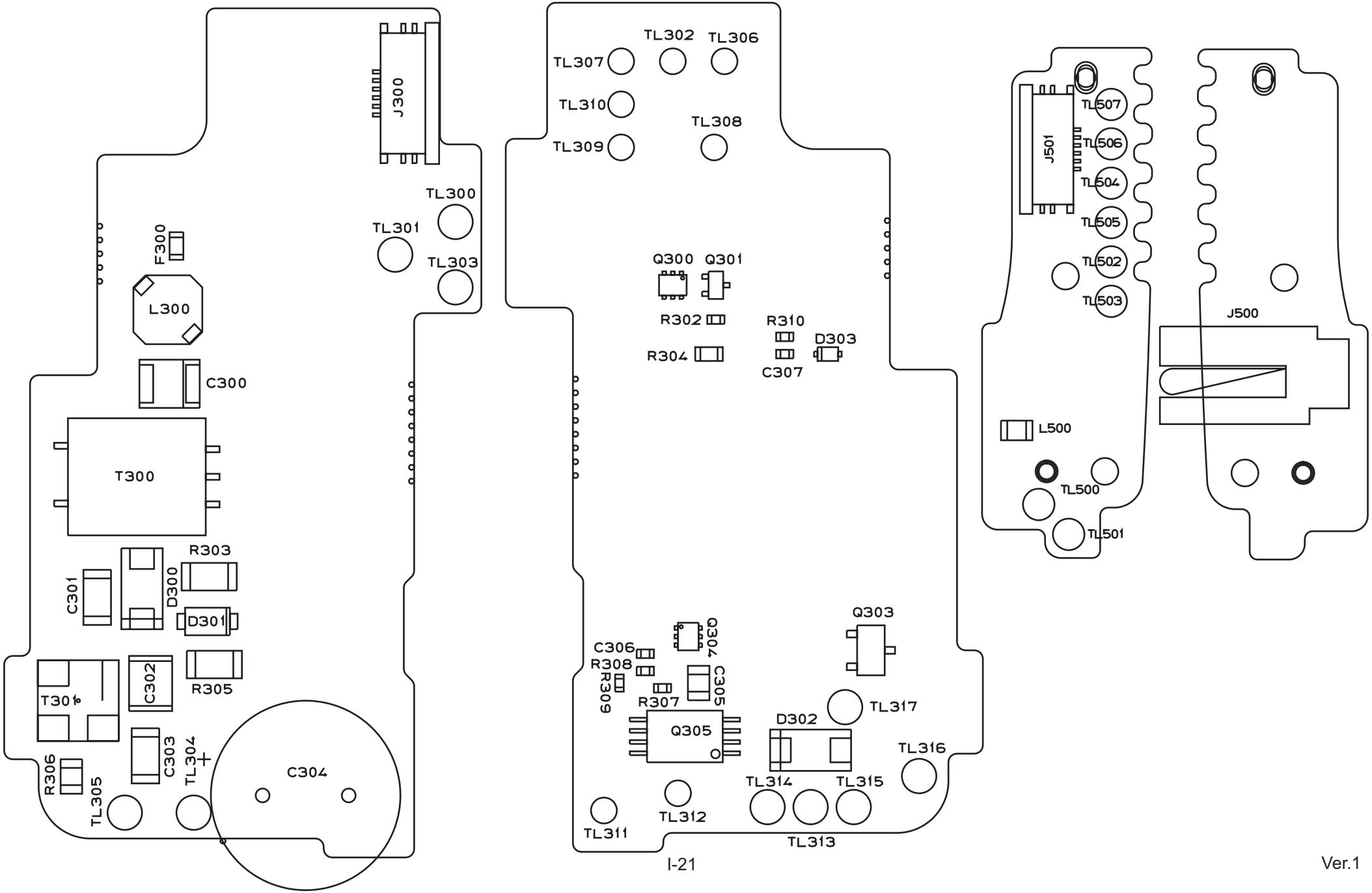

Ver.1

X-1/X-2/C-50ZOOM MOUNTING DIAGRAM : PW-PCA (1/2)

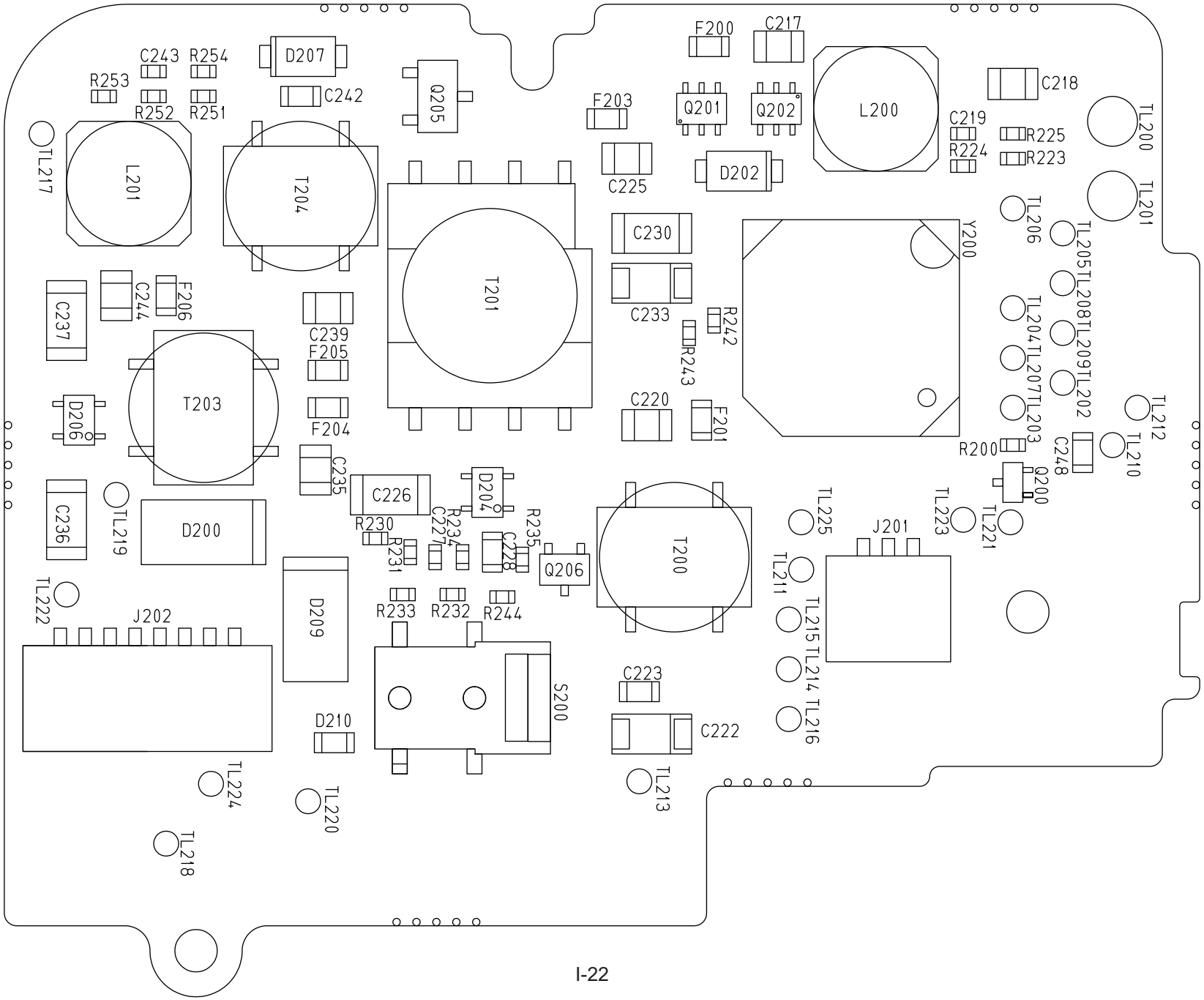

X-1/X-2/C-50ZOOM MOUNTING DIAGRAM : PW-PCA (2/2)

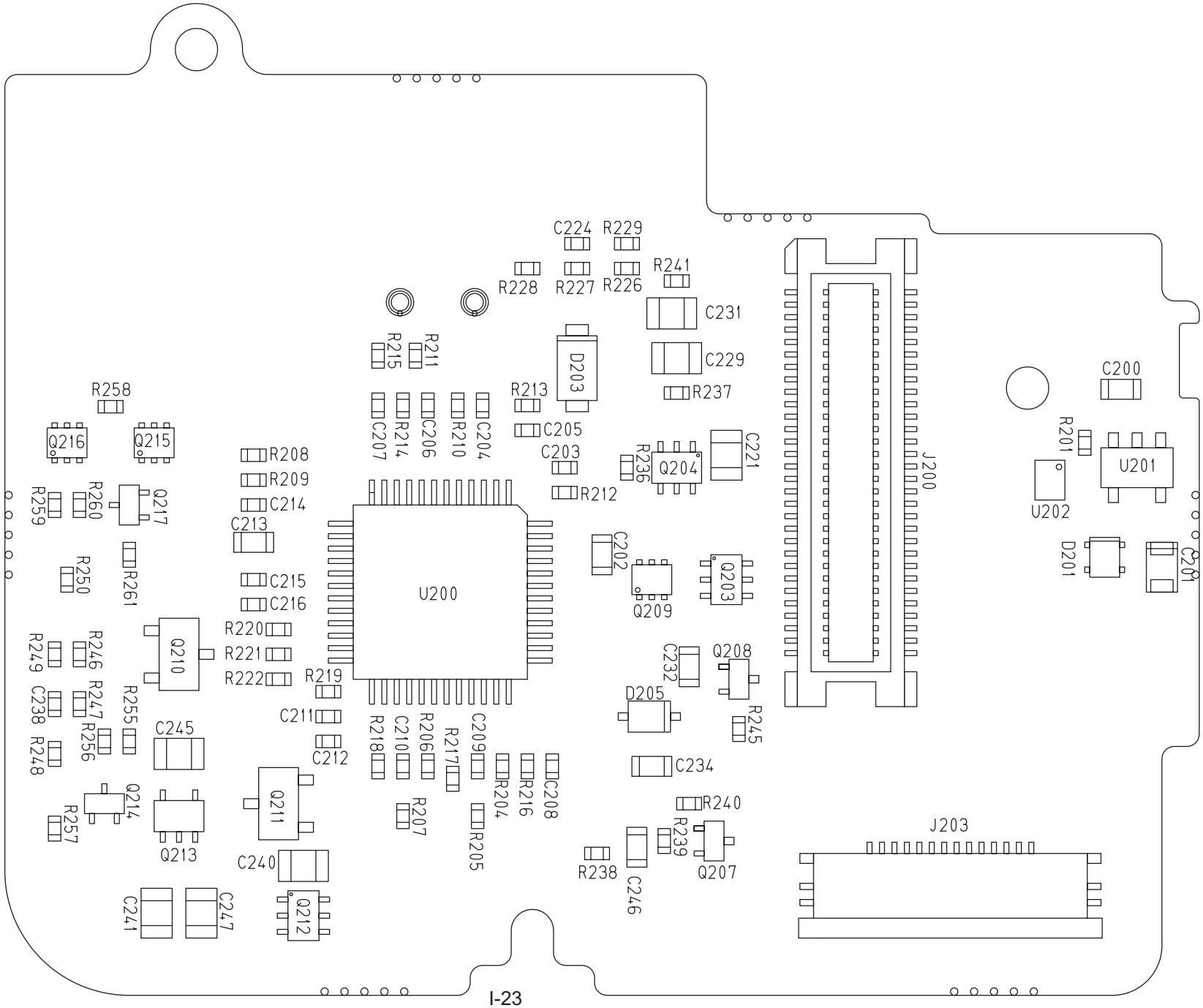

Ver.1

X-1/X-2/C-50ZOOM MOUNTING DIAGRAM : CAM-PCA

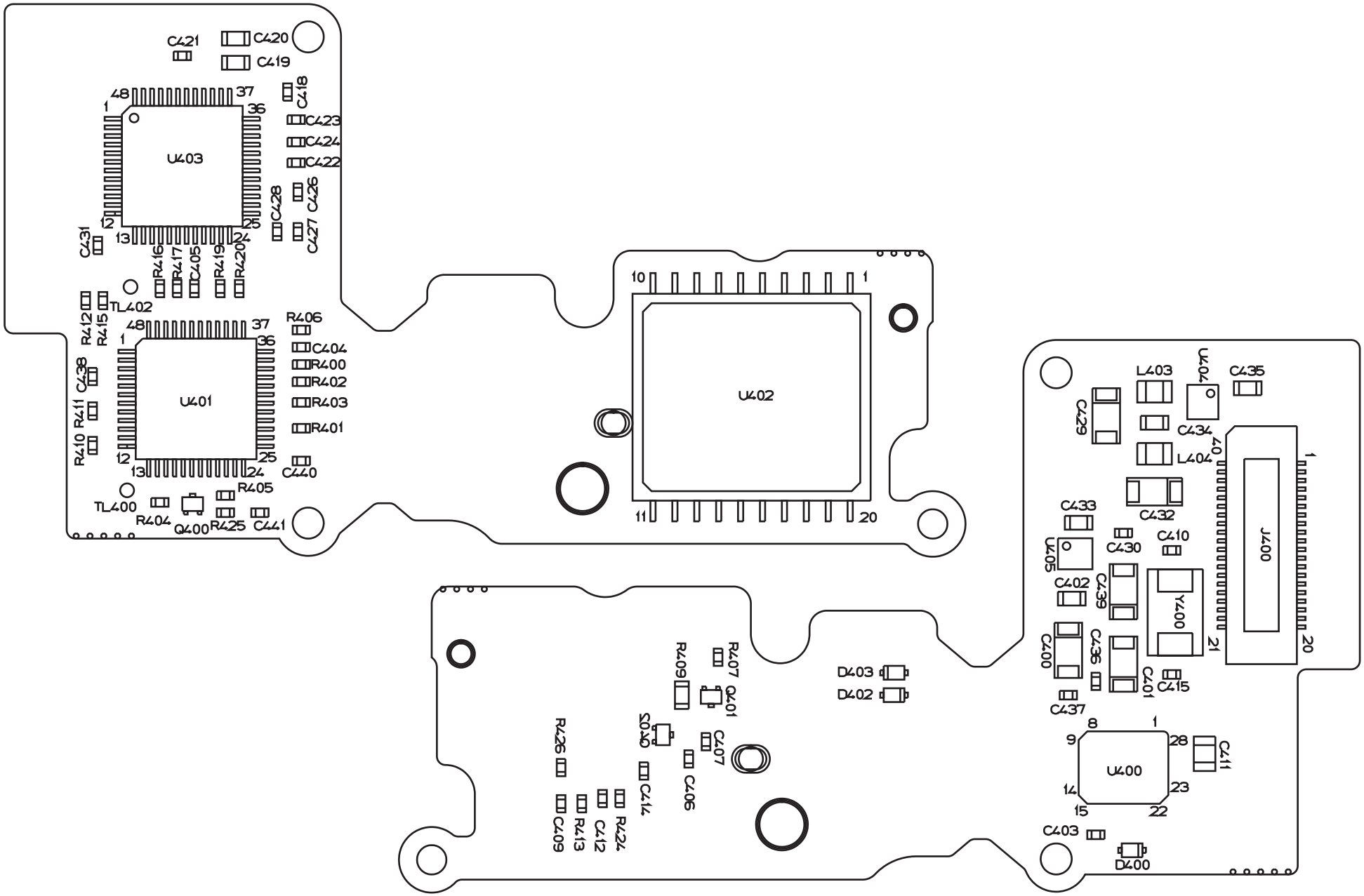

X-1/X-2/C-50ZOOM MOUNTING DIAGRAM : MC-PCA (1/2)

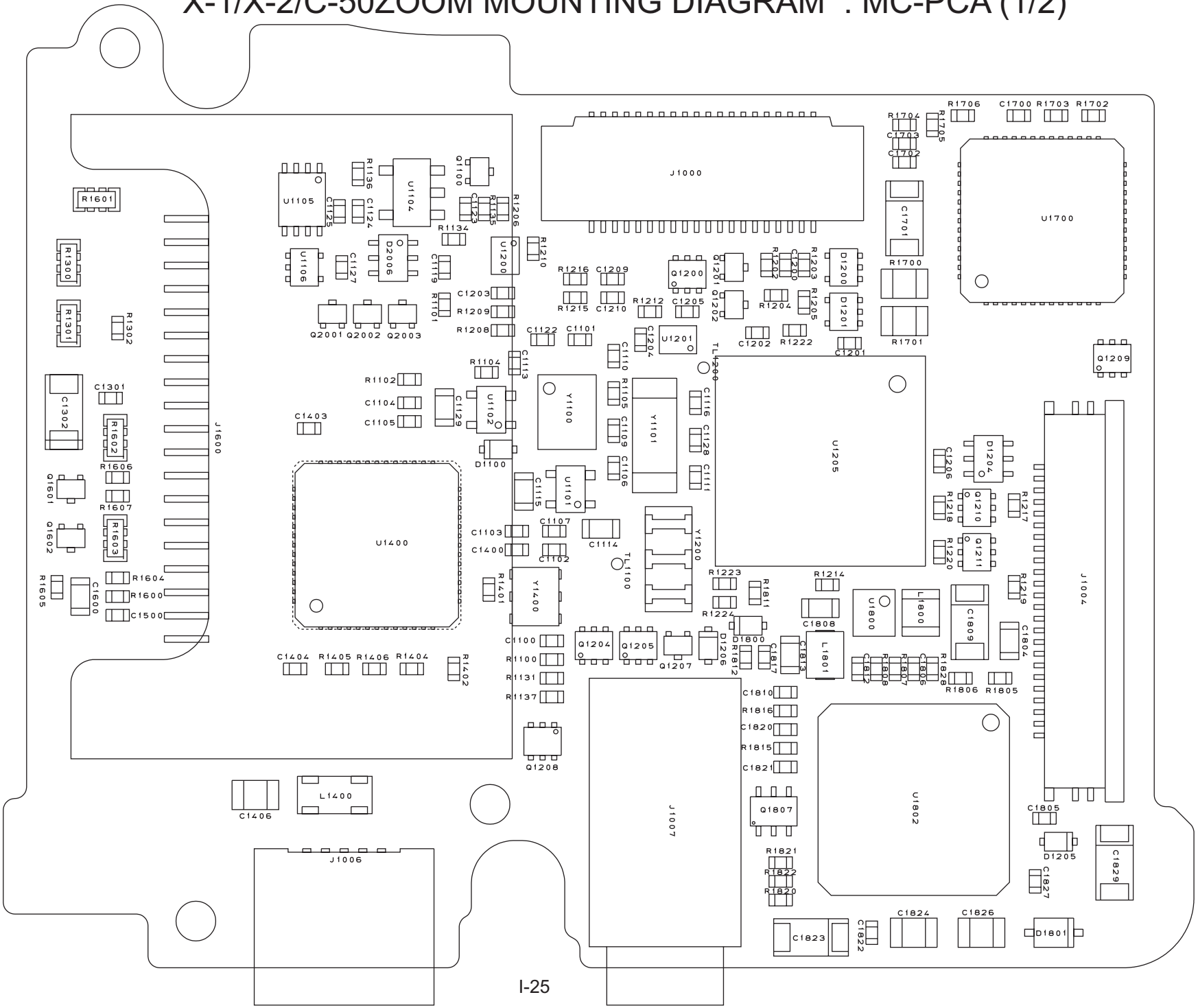

Ver.1

X-1/X-2/C-50ZOOM MOUNTING DIAGRAM : MC-PCA (2/2)

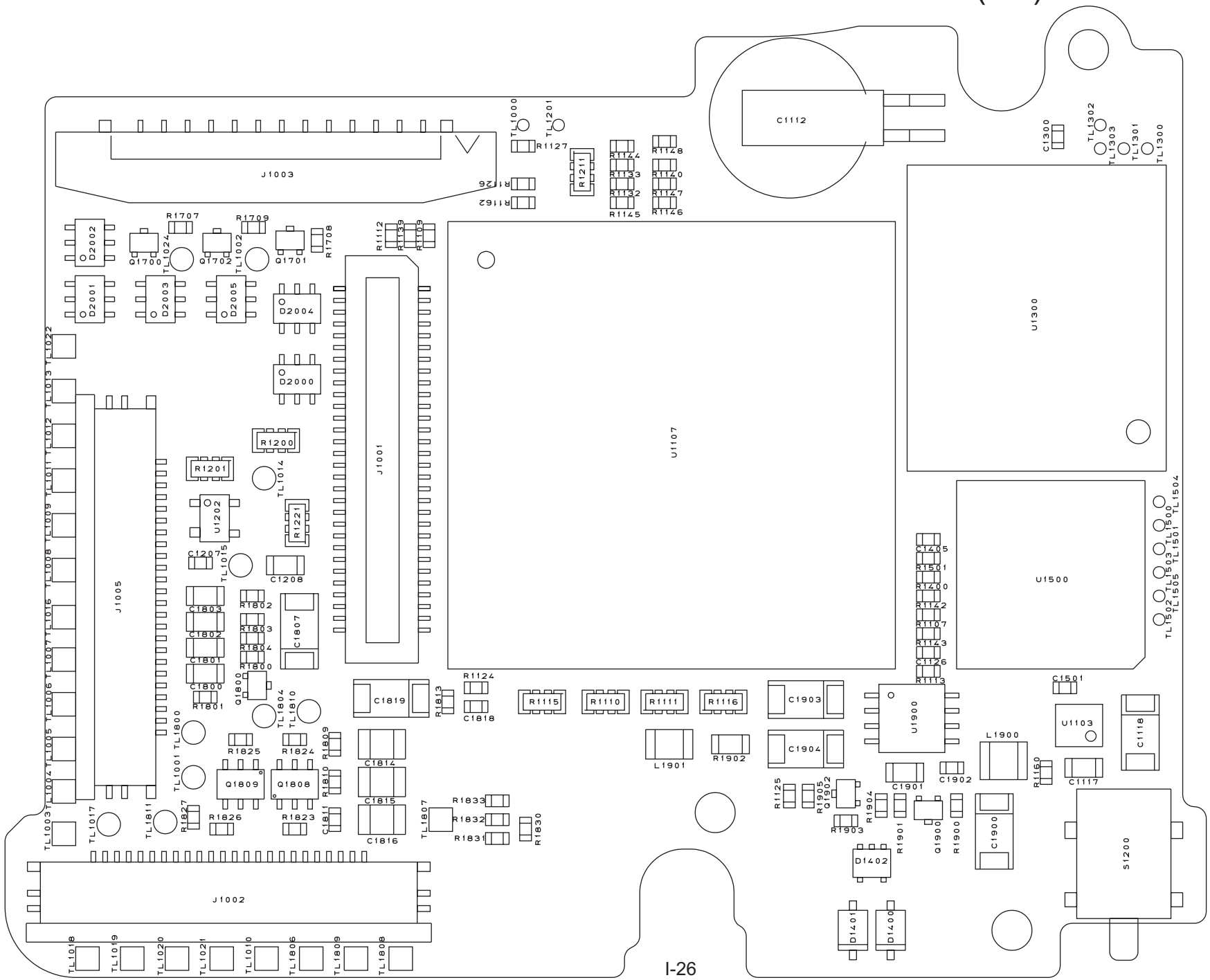

Ver.1

X-1/X-2/C-50ZOOM MOUNTING DIAGRAM : SUB-FPCA

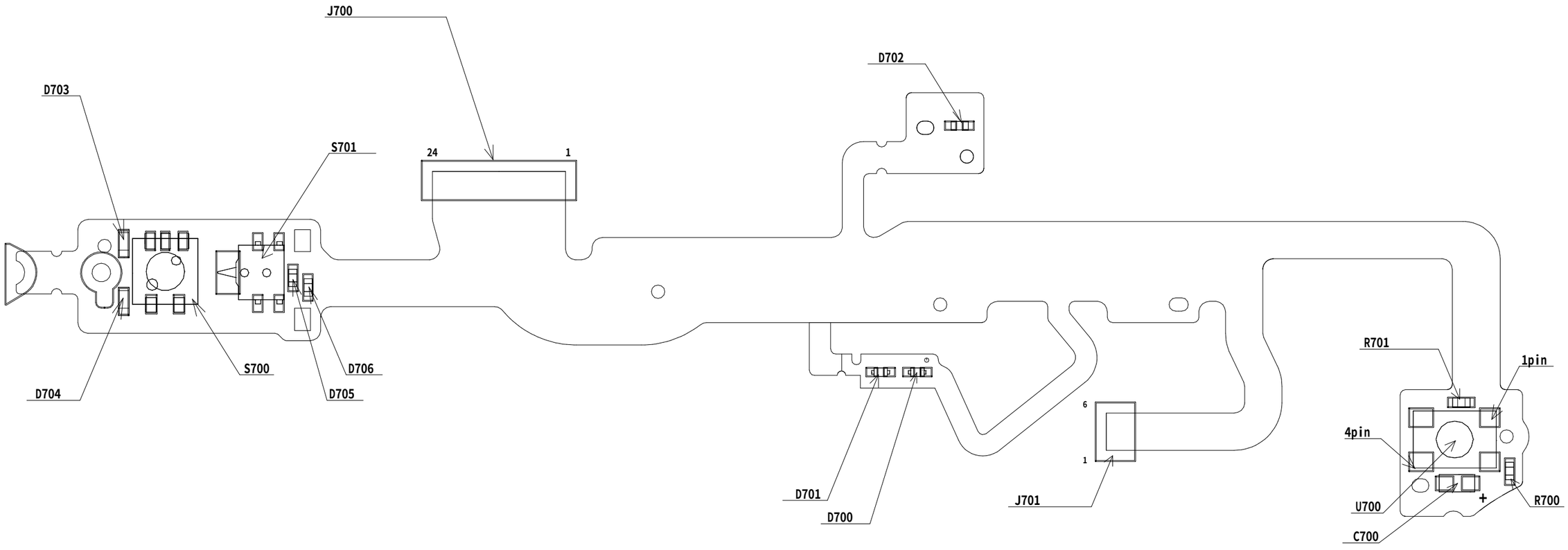

Ver.1