Model DVD600
5 Disc DVD/CD Changer
JBL CINEMA ProPack™ 600 system

Service Manual

CONTENTS

PRECAUTIONS.. ……2
ESD WARNINGS……4
SPECIFICATIONS……5
SET-UP GUIDE……6
FRONT PANEL CONTROLS……7
REAR PANEL CONNECTIONS……9
REMOTE CONTROL FUNCTIONS……10
BASIC TROUBLESHOOTING……14
ADVANCED TROUBLESHOOTING……17
BULLETIN JBL2003-09……18
BULLETIN JBL2003-10……21
TECH TIP JBLTT2003-02……22
DVD600 EXPLODED VIEW……23
EXPLODED/MECHANICAL PARTS LIST…24
EXPOSE/SERVICE POWER SUPPLY……25
DVD600 POWER SUPPLY……26
BLOCK DIAGRAM……33
ELECTRICAL PARTS LIST……36
PACKING/ACCESSORIES……47
DVD600 PCB DRAWINGS……48
DVD600 SCHEMATICS……55

JBL Consumer Products
250 Crossways Park Dr.
Woodbury, New York 11797

Rev4 2/2004

SERVICING PRECAUTIONS

NOTES REGARDING HANDLING OF THE PICK-UP

1. Notes for transport and storage

1) The pick-up should always be left in its conductive bag until immediately prior to use.
2) The pick-up should never be subjected to external pressure or impact.

Storage in conductive bag

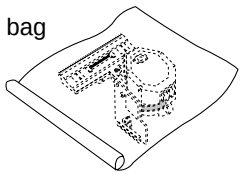

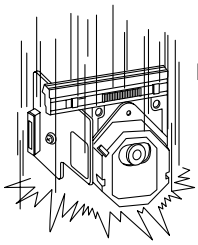

Drop impact

2. Repair notes

1) The pick-up incorporates a strong magnet, and so should never be brought close to magnetic materials.
2) The pick-up should always be handled correctly and carefully, taking care to avoid external pressure and impact. If it is subjected to strong pressure or impact, the result may be an operational malfunction and/or damage to the printed-circuit board.
3) Each and every pick-up is already individually adjusted to a high degree of precision, and for that reason the adjustment point and installation
screws should absolutely never be touched.
4) Laser beams may damage the eyes!
Absolutely never permit laser beams to enter the eyes!
Also NEVER switch ON the power to the laser output part (lens, etc.) of the pick-up if it is damaged.

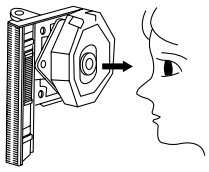

NEVER look directly at the laser beam, and don't let contact fingers or other exposed skin.

5) Cleaning the lens surface
If there is dust on the lens surface, the dust should be cleaned away by using an air bush (such as used for camera lens). The lens is held by a delicate spring. When cleaning the lens surface, therefore, a cotton swab should be used, taking care not to distort this.

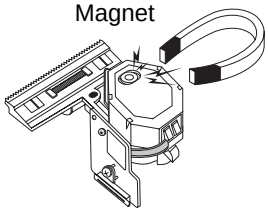

Magnet

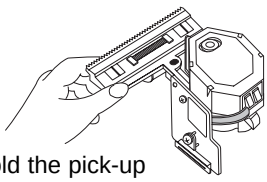

How to hold the pick-up

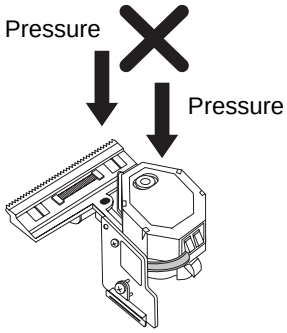

Pressure

Pressure

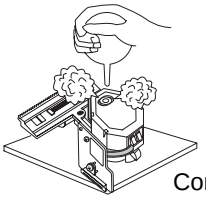

Conductive Sheet

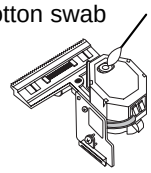

Cotton swab

6) Never attempt to disassemble the pick-up.
Spring by excess pressure. If the lens is extremely dirty, apply isopropyl alcohol to the cotton swab. (Do not use any other liquid cleaners, because they will damage the lens.) Take care not to use too much of this alcohol on the swab, and do not allow the alcohol to get inside the pick-up.

NOTES REGARDING COMPACT DISC PLAYER REPAIRS

1. Preparations

1) Compact disc players incorporate a great many ICs as well as the pick-up (laser diode). These components are sensitive to, and easily affected by, static electricity. If such static electricity is high voltage, components can be damaged, and for that reason components should be handled with care.
2) The pick-up is composed of many optical components and other high-precision components. Care must be taken, therefore, to avoid repair or storage where the temperature of humidity is high, where strong magnetism is present, or where there is excessive dust.

2. Notes for repair

1) Before replacing a component part, first disconnect the power supply lead wire from the unit
2) All equipment, measuring instruments and tools must be grounded.
3) The workbench should be covered with a conductive sheet and grounded.
   When removing the laser pick-up from its conductive bag, do not place the pick-up on the bag. (This is because there is the possibility of damage by static electricity.)
4) To prevent AC leakage, the metal part of the soldering iron should be grounded.
5) Workers should be grounded by an armband (1MΩ)
6) Care should be taken not to permit the laser pick-up to come in contact with clothing, in order to prevent static electricity changes in the clothing to escape from the armband.
7) The laser beam from the pick-up should NEVER be directly facing the eyes or bare skin.

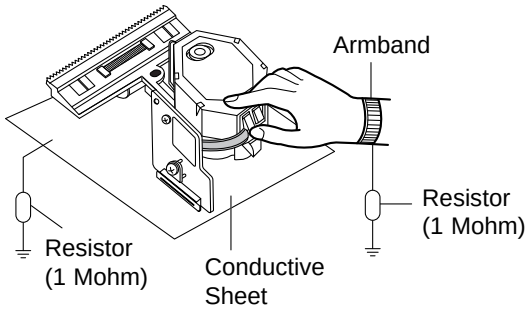

ESD PRECAUTIONS

Electrostatically Sensitive Devices (ESD)

Some semiconductor (solid state) devices can be damaged easily by static electricity. Such components commonly are called Electrostatically Sensitive Devices (ESD). Examples of typical ESD devices are integrated circuits and some field-effect transistors and semiconductor chip components. The following techniques should be used to help reduce the incidence of component damage caused by static electricity.

1. Immediately before handling any semiconductor component or semiconductor-equipped assembly, drain off any electrostatic charge on your body by touching a known earth ground. Alternatively, obtain and wear a commercially available discharging wrist strap device, which should be removed for potential shock reasons prior to applying power to the unit under test.
2. After removing an electrical assembly equipped with ESD devices, place the assembly on a conductive surface such as aluminum foil, to prevent electrostatic charge buildup or exposure of the assembly.
3. Use only a grounded-tip soldering iron to solder or unsolder ESD devices.
4. Use only an anti-static solder removal device. Some solder removal devices not classified as "anti-static" can generate electrical charges sufficient to damage ESD devices.
5. Do not use freon-propelled chemicals. These can generate electrical charges sufficient to damage ESD devices.
6. Do not remove a replacement ESD device from its protective package until immediately before you are ready to install it. (Most replacement ESD devices are packaged with leads electrically shorted together by conductive foam, aluminum foil or comparable conductive materials).
7. Immediately before removing the protective material from the leads of a replacement ESD device, touch the protective material to the chassis or circuit assembly into which the device will by installed.

CAUTION : BE SURE NO POWER IS APPLIED TO THE CHASSIS OR CIRCUIT, AND OBSERVE ALL OTHER SAFETY PRECAUTIONS.

8. Minimize bodily motions when handing unpackaged replacement ESD devices. (Otherwise harmless motion such as the brushing together of your clothes fabric or the lifting of your foot from a carpeted floor can generate static electricity sufficient to damage an ESD device).

TECHNICAL SPECIFICATIONS
DVD600

Playback Media:	5-inch (12cm) or 3-inch (8cm) DVD-Video: Region 1, single or dual sides/layers, linear PCM, Dolby Digital, or DTS CD, CD-RW: Linear PCM Audio Video CD (VCD): MPEG-1 Video, Linear PCM Audio
Video Section:	
Signal format:	NTSC
Composite Output:	1V p-p/75 ohms, sync, negative polarity
S Output:	Y/Luminance: 1V p-p/75 ohms, sync, negative polarity C/Chrominance: 0.286V p-p
Component Outputs:	Y: 1V p-p/75 ohms, sync, negative polarity Pr: 0.648V p-p/75 ohms Pb: 0.648V p-p/75 ohms
Audio Section:	
Coaxial Digital Output:	0.5V p-p/75 ohms
Frequency Response:	2Hz to 22kHz, +/– 0.5dB (44.1kHz sampling rate)
Dynamic Range:	DVD: 105dB (20-bit) CD: 100dB
Channel Separation:	90dB
THD:	0.0035%
Signal-to-Noise Ratio:	100 dB
Wow and Flutter:	below measurable limits
General:	
Unit Power Consumption:	25W
Unit Dimensions:	Width: 17.3 inches (440mm) Height: 5.1 inches (130mm) Depth: 16.9 inches (420mm)
Unit Weight:	14.4 lb (7.6kg)

Depth measurement includes knobs and buttons.
Height measurement includes feet and chassis.
All features and specifications are subject to change without notice.

This product incorporates copyright protection technology that is protected by method claims of certain U.S. patents and other intellectual property rights owned by Macrovision Corporation and other rights owners. Use of this copyright protection technology must be authorized by Macrovision Corporation and is intended for home and other limited viewing uses only, unless otherwise authorized by Macrovision Corporation. Reverse engineering or disassembly is prohibited.

Quick Setup Guide to Using the DVD600 (with the DCR600)

The DVD600 can play discs in the following formats:

- Both 5-inch (12cm) and 3-inch (8cm) discs
- CD audio discs
- DTS audio discs
- CD-RW audio discs
- DVD movie discs
- VCD video compact discs

However, it cannot play:

- DVD discs with a Region Code other than "1" or "All"
- DVD discs using PAL format video
- DVD-ROM data discs
- DVD-RAM discs
- CD-R discs
- CD-I discs
- CD-G discs
- SVCD discs
- Photo CD discs
- MP3 audio discs

Press the DVD600's **Power Switch** 1D so that it latches and the **Status Indicator** 2D turns amber, indicating that the unit is in the Standby mode. Turn the unit on by pressing either the **Power On Button** 2 on the remote or the **Open/Close Button** 6D or **Play Button** 10D on the front panel. The **Status Indicator** 2D will turn green.

Open the DVD600's drawer, and insert up to 5 discs in the tray locations, using the **Disc Skip Button** 51 4D to rotate the carousel to access all locations. Make sure each disc is loaded with the label side up, and that it is seated correctly in its location.

When you close the drawer, the DVD600 will automatically start playing the first disc it recognizes, whether it is a CD or DVD disc. However, whichever type of disc is playing, make sure that you have selected DVD as the input source on the DCR600 by pressing 4 on the remote, or 11 on the front panel of the receiver until DVD is indicated.

For most discs, the DVD600 and DCR600 will automatically select the correct surround mode. To make sure that audio in the DTS audio format is correctly processed, you must choose that format as the default in the DVD600's setup menu. Simply stop play of the disc, and enter the setup menu by pressing 26 on the remote. Use the **▲/▼ Buttons** 25 31 to scroll down to **Digital Audio Output.** Press the **Set Button** 28 to select this option, and a screen will pop up, allowing you to choose from PCM, Dolby Digital or DTS outputs. Use the **▲/▼ Buttons** 25 31 to highlight DTS, then press the **Set Button** 28 to select this choice. You do not need to reset the audio output for other formats. The DCR600 and DVD600 will automatically process PCM, Dolby Digital and DTS signals correctly. Press the **Menu Button** 26 to exit the menu screen. If you press the **Menu Button** 26 while the disc is playing, you can access the disc's menu to choose the DTS format there as well.

You may wish to experiment with surround modes other than Dolby Digital and DTS using the DCR600's functions. Press the **Surround Mode Selector** 20 7 to scroll through such choices as Dolby Pro Logic, Dolby 3 Stereo, 5-Channel Stereo, Hall, Theater, VMAx, Logic 7 or Surround Off (Stereo). See page 52 for descriptions of these modes.

Press the **Stop Button** 8D 61 once to enter Resume mode, in which play will resume from the point where it was stopped. Pressing the **Stop Button** 8D 61 twice will cause play to resume from the beginning of the disc, or the disc's main menu.

You may wish to listen to the tracks of a CD, or view the chapters of a DVD, in a different order than they appear on the disc.

The Random function will play all of the tracks on one CD, or all of the chapters on one DVD, in a random order selected by the DVD600. The DVD600 does not randomly play selections from all five discs inserted in its tray, since this might result in the odd experience of alternating among audio tracks and disjointed video selections. Simply press the **Random Button** 50 once to start random play, and press it again to return to standard play, using the disc's main menu.

The DVD600 offers several variations of Repeat Play: **Repeat All** discs in the unit once; **Repeat 1 Disc** until play is manually stopped; **Repeat Title** on a DVD disc until play is manually stopped; **Repeat Track/Chapter** on either a CD or DVD disc until play is manually stopped; and **Repeat A–B,** which repeats a programmed selection until play is manually stopped.

Press the **Repeat Button** 55 to scroll through the repeat choices. Repeat play can be stopped by pressing the **Repeat Button** 55 until Repeat Off is selected, or by pressing the **Stop Button** 61 8D twice.

Program the Repeat A–B function while a disc is playing. Press the **Repeat A–B Button** 56 at the start of the passage to be repeated, and press it again at the end of the passage. The passage will continue to play until the **Stop Button** 61 8D is pressed.

You can also program play lists of selected tracks or chapters.

1. Select the DVD600 by pressing the **DVD Button** 4, and press the **Program Button** 46 to bring up the Program Edit Screen.
2. Use the ▲/▼ 25 31 keys to select a disc number, and press either **Set** 28 or ▶ 29 to enter the selection and move to the next option.
3. Use the ▲/▼ 25 31 keys to select a track (for a CD) or title (for a DVD), and press either **Set** 28 or ▶ 29 to enter the selection and move to the next option. If "99" appears, it means the DVD600 has not read the disc yet to determine whether it is a CD or DVD.
4. For DVDs only, use the same procedure to enter a chapter.
5. The next choice is to add the selection to the play list by pressing the **Set Button** 28.
6. Repeat Steps 2–5 to enter up to 25 selections into the play list.
7. Play the list by using the arrow keys to highlight the Play selection, and the **Set Button** 28 to begin play. Press the **Stop Button** 61 twice to stop playback of the list. To cancel the list, press the **Clear Button** 47.
8. To delete a selection, highlight the item to be deleted, press the **Set Button** 28, and then use the ▲/▼ 25 31 keys to choose the **Delete Button**. Press the **Set Button** 28 again to delete it. Alternatively, highlight the item and press the **Clear Button** 47 to delete it.
9. Insert an entry by highlighting the item in the play list at the point of insertion, pressing the **Set Button** 28, and using the ▼ 31 key once to select the Insert option. Follow Steps 2 through 5 above to enter the new selection. You may also edit an entry by pressing the **Check Button** 53 twice to step through the items in a play list. Use the ◀/▶ 27 29 keys to choose a disc, track or chapter to be edited, and the ▲/▼ 25 31 keys to make a change.

This completes the quick setup and operation of your JBL Cinema ProPack 600 system. Additional information is provided in the following sections for those users with additional components, or who wish to make other, more advanced adjustments to their system.

DVD600 Front Panel Controls

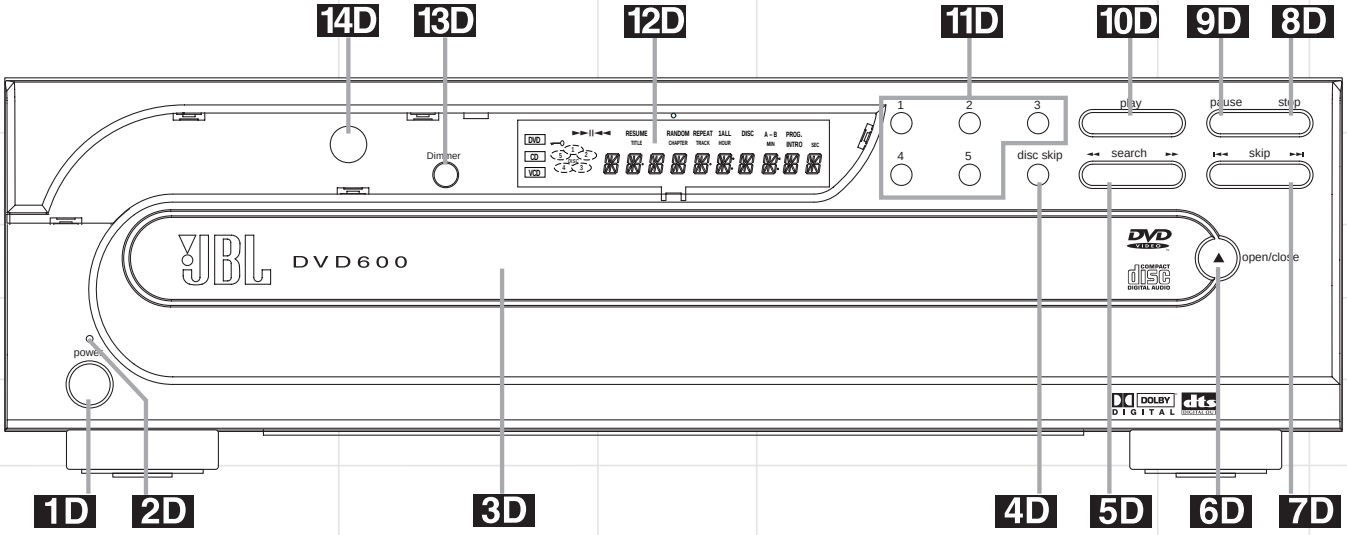

1D Power Switch: Press to apply power to the DVD600. When the unit is first turned on, the **Status Indicator 2D** will turn amber, indicating that it is in Standby mode. To turn the unit on, press the **Open/Close Button 6D** or **Play Button 10D**, or use the remote control to select **DVD** (4), and then power the unit on (2).

2D Status Indicator: When the DVD600 is in the On mode, this indicator will glow green. When the unit is in Standby, the indicator will glow amber.

3D Disc Tray: Holds up to five DVD or CD discs that can be played one at a time in the DVD600.

4D Disc Skip: Press to change the disc being played. Each press of the button will move the tray forward to the next occupied position in the tray, skipping over the empty disc positions.

5D Search Forward/Reverse: Press to move forward or backward through a disc at one of four speeds. Each press and release will increase the search speed, as indicated in the on-screen display. Once you have selected the desired speed, release the button and the disc will continue to search at fast speed. To resume normal playback speed, press the Play button.

6D Open/Close Button: Press to open or close the **Disc Tray 3D**.

7D Skip Forward/Reverse: Press to move forward or backward through the music tracks or chapters on a disc.

8D Stop: Press once to place the disc in the Resume mode, which means that playback will stop, but (as long as the tray is not opened or the disc changed) DVD playback will continue from the same point on the disc when the Play button is pressed again. Resume will also work if the unit was turned off. To stop a disc and have play start from the beginning, press the button twice.

9D Pause: Press to momentarily pause playback. To resume playback, press the button again, or press the **Play Button 10D**. If a DVD is playing, action will freeze and a still picture will be displayed when the button is pressed.

10D Play: Press to begin playback of a disc, or to resume playback after the **Pause Button 9D** has been pressed.

11D Direct Access Buttons: Press one of these buttons to play any of the five discs loaded in the Disc Tray.

12D Information Display: This display contains a variety of indicators that provide information about the status of the DVD600 and the disc currently playing.

13D Display Dim: Press this button to adjust the brightness of the Information Display by 50% or to turn the display off completely in the following order: FULL BRIGHTNESS → HALF BRIGHTNESS → OFF → FULL BRIGHTNESS.

14D Remote Sensor: The sensor that receives the infrared commands from the remote control is behind this area. Do not cover or obscure this part of the front panel, in order to avoid a malfunction with the remote.

DVD600 Front Panel Information Display

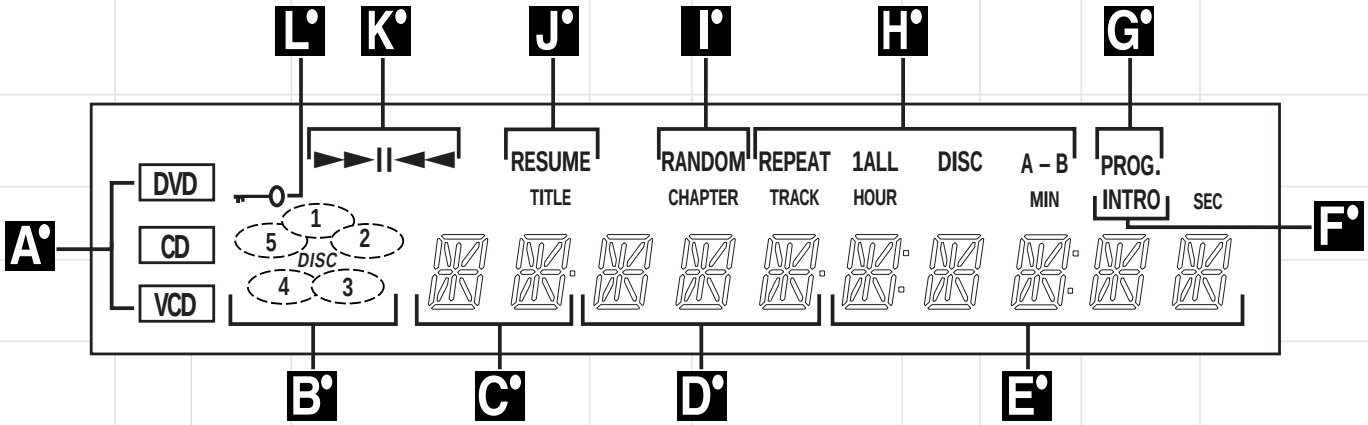

A Disc Type: Lights to show the type of disc currently being played.

B Disc Number: Shows if a disc is loaded in a tray position. The indicator for the disc in play flashes. Note that if a disc is added to, or removed from, the tray while a disc is playing, the indicator will not show the change until all discs are cycled.

C Title: Shows the DVD title number currently playing.

D Chapter/Track Number: Shows the current chapter (DVD) or current track number (CD).

E Program Time: Shows the running time of a DVD or current track time, time remaining in the current track, or the total remaining time of a CD.

NOTE: The Program Time Indicators will also display text messages about the DVD600's status, including `Reading` when a disc is loading, `Bye` when the unit is turned off, and `Disc Error` when a disc not compatible with the DVD600 is put into the play position.

F Intro: Lights when the Intro Scan function is active.

G Program: Lights during programming.

H Repeat: Lights to indicate any of the Repeat modes.

I Random: Lights when the unit is in the Random Play mode.

J Resume: Lights when the Stop button has been pressed once to put the unit in the Resume mode.

K Playback Mode: Lights to show the current playback mode:

▶ Lights when a disc is playing in the Normal mode.

▶▶ Lights when the disc is in the Fast Search Forward mode. For DVDs, when both triangles glow steadily, the disc plays at 2x normal speed. When the right triangle is flashing, the disc plays at 4x normal speed. When the left triangle is flashing, the disc plays at 8x normal speed. When both triangles are flashing, the disc plays at 16x normal speed. For CDs, only the first three Fast Search modes are available.

▶❙❙ Lights when the disc is paused.

◀◀ Lights when the disc is in the Fast Search Reverse mode. For DVDs, when both triangles glow steadily, the disc plays at 2x normal speed. When the left triangle is flashing, the disc plays at 4x normal speed. When the right triangle is playing, the disc plays at 8x normal speed. When both triangles are flashing, the disc plays at 16x normal speed. For CDs, only the first three Fast Search modes are available.

L Parental Lock Indicator: This indicator lights when the parental-lock system is engaged in order to prevent anyone from changing the rating level without a code.

DVD600 Rear Panel Connections

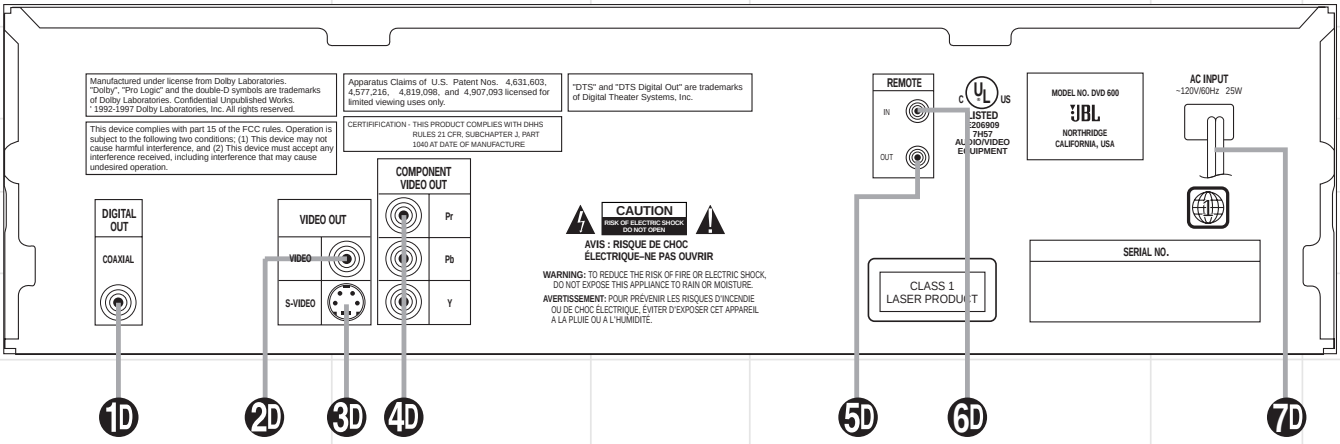

1D Coaxial Digital Output: Connect this jack to the coaxial digital input of an A/V receiver or surround processor for Dolby Digital, DTS or PCM audio playback.

NOTE: The coaxial digital output should only be connected to a digital input. Even though it is the same RCA-type connector as standard analog audio connections, DO NOT connect it to a conventional analog input jack.

2D Composite Video Output: Connect this jack to the video input on a television or video projector, or to a video input on an A/V receiver or processor if you are using that type of device for video input switching.

3D S-Video Output: Connect this jack to the S-Video input on a television or video projector, or to an S-Video input on an A/V receiver or processor if you are using that type of device for S-Video input switching.

4D Component Video Outputs: If your TV or video projector has component video inputs, you may connect these output jacks to the set for the highest video quality available. Note that the component video inputs may be labeled as Y/Pr/Pb or Y/Cr/Cb but, for connection purposes, they are the same. The outputs of these jacks should NOT be connected to a standard composite video input.

5D Remote Control Output: Connect this jack to the infrared (IR) input jack of another JBL or other compatible remote-controlled product to have the built-in **Remote Sensor** 14D on the DVD600 provide IR signals to other compatible products.

6D Remote Control Input: Connect the output of a remote infrared sensor, or the remote control output of another JBL or other compatible product, to this jack. This will enable the remote control to operate even when the front panel **Remote Sensor** 14D is blocked. This jack may also be used with compatible IR remote control-based automation systems.

7D AC Power Cord: Connect this plug to an AC outlet. If the outlet is controlled by a switch, make certain that it is in the ON position.

Remote Control Functions (To control the DVD600 and DCR600)

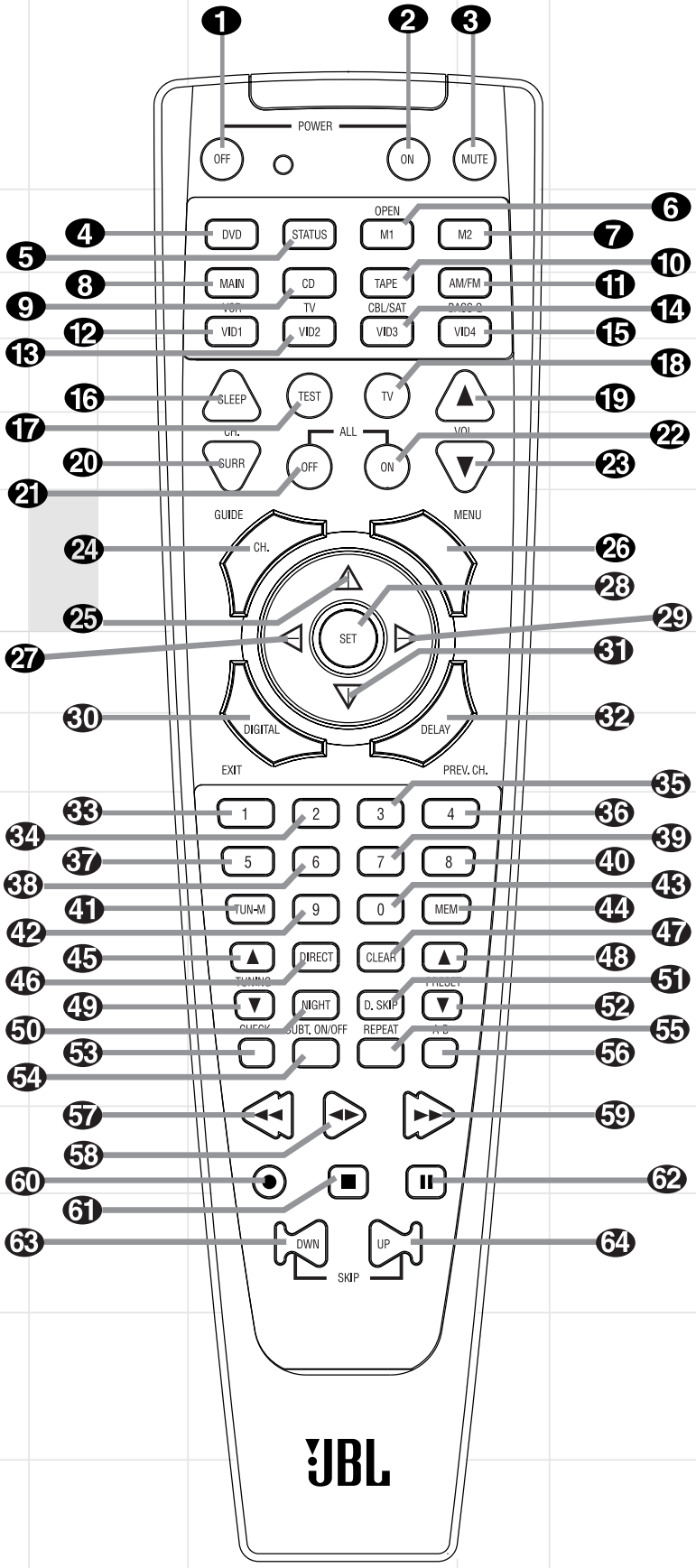

IMPORTANT NOTE: The JBL Cinema ProPack 600 remote control may be programmed to control up to eight devices, including the DCR600 and DVD600. It is helpful to think of the remote as being organized into “pages,” with one page for each device. Depending on which device has been selected, the buttons on that device’s page will perform different functions, as listed starting on the next page. These functions may vary from the labels on the remote, and from one device to the next. Some buttons may perform no function at all for a given device.

In order to go to the page for a particular device, such as the DVD600, you will need to press the Input Selector button for that device (DVD in this case), located in a grouping just below the power buttons. The remote will then function as if it were dedicated to the DVD600.

If you would like to make an adjustment that affects the DCR600 receiver, such as turning the volume up or down, you must first go to the page for the DCR600 by pressing its Input Selector button. This button is labeled "Main" on the remote. The exception to this rule is that the DVD600’s transport functions – Play, Forward and Reverse Search, Stop, Pause, and Previous and Next Chapter/Track Skip – may be accessed from the "Main" page, without having to jump to the DVD page.

❶ **Power Off Button:** Turns off the power to a device selected by pressing its Input Selector.

❷ **Power On Button:** Turns on the power to a device selected by pressing its Input Selector.

❸ **Mute Button:** Press to momentarily silence the DCR600 or TV set being controlled, depending on which device has been selected.

When the remote is being programmed to operate an external device, such as a CD player, this button is pressed, together with the Input Selector button, for the new device to begin the programming process.

❹ **DVD Input Selector:** Pressing this button will perform three actions: 1) If the DCR600 is not turned on, it will power up. 2) It will select DVD as the input source. 3) It will switch to the page for the DVD600, which will cause the remote to operate only the DVD changer. Press the **Main Button** ❽ to return the remote to control of the DCR600 receiver.

❺ **Status Button:** This button operates only when the DVD600 has been selected. When a disc is playing, pressing this button will display the Status Banner, which contains information about the disc and enables you to change the functions.

❻❼ **M1 and M2 Macro Buttons/Open-Close Button:** Press these buttons to store or recall a "Macro", which is a preprogrammed sequence of commands stored in the remote.

When the DVD600 has been selected, the **M1 Button** ❻ functions to open or close the disc tray drawer. (**M2** ❼ has no function.) If the drawer is opened while a disc is still playing, playback will continue and discs not in use may be changed. If the drawer is opened while the unit is stopped, the disc that was playing will be presented at the front-center position of the tray.

❽ **Main Input Selector:** Pressing this button will perform two actions: 1) If the DCR600 is not turned on, it will power up. 2) It will switch to the page for the DCR600, which will cause the remote to operate only the receiver and the transport functions of the DVD600.

❾ **CD Input Selector:** Pressing this button will perform three actions: 1) If the DCR600 is not turned on, it will power up. 2) It will select CD as the input source. 3) It will switch to the page for the CD player whose codes have been programmed into the remote, which will cause the remote to operate only the CD player. Press the **Main Button** ❽ to return the remote to control of the DCR600 receiver.

❿ **Tape Input Selector:** Pressing this button will perform three actions: 1) If the DCR600 is not turned on, it will power up. 2) It will select TAPE as the input source. 3) It will switch to the page for the tape deck whose codes have been programmed into the remote, which will cause the remote to operate only the tape deck. Press the **Main Button** ❽ to return the remote to control of the DCR600 receiver.

⓫ **AM/FM Tuner:** Selects the DCR600's tuner as the listening choice. Pressing this button when the tuner is already in use will select between the AM and FM bands.

⓬ **Video 1 Input Selector (VCR):** Pressing this button will perform three actions: 1) If the DCR600 is not turned on, it will power up. 2) It will select VIDEO 1 as the input source. 3) It will switch to the page for the video device whose codes have been programmed into the remote, which will cause the remote to operate only that video device. You may find it convenient to connect your VCR to the Video 1 input, since it is the only video source that also features outputs for recording. Press the **Main Button** ❽ to return the remote to control of the DCR600 receiver.

⓭ **Video 2 Input Selector (TV):** Pressing this button will perform three actions: 1) If the DCR600 is not turned on, it will power up. 2) It will select VIDEO 2 as the input source. 3) It will switch to the page for the video device whose codes have been programmed into the remote, which will cause the remote to operate only that video device. You may find it convenient to connect your television to the Video 2 input. Press the **Main Button** ❽ to return the remote to control of the DCR600 receiver.

⓮ **Video 3 Input Selector (Cable or Satellite):** Pressing this button will perform three actions: 1) If the DCR600 is not turned on, it will power up. 2) It will select VIDEO 3 as the input source. 3) It will switch to the page for the video device whose codes have been programmed into the remote, which will cause the remote to operate only that video device. You may find it convenient to connect your cable television box or satellite receiver to the Video 3 input. Press the **Main Button** ❽ to return the remote to control of the DCR600 receiver.

⓯ **Video 4 Input Selector:** Pressing this button will perform three actions: 1) If the DCR600 is not turned on, it will power up. 2) It will select VIDEO 4 (the front-panel input) as the input source. 3) It will switch to a special page that is preprogrammed to operate the JBL BassQ™ low-frequency equalization module. You may find it convenient to connect your portable camcorder or video game to the Video 4 input. Press the **Main Button** ❽ to return the remote to control of the DCR600 receiver.

⓰ **Sleep:** Places the DCR600 in the Sleep Timer mode. After the time shown in the display has elapsed, the DCR600 will automatically go into Standby. Each press of this button changes the time until turn-off in intervals of 10 minutes, starting with a maximum of 90 minutes.

This button is also used to change channels on your TV when the TV is selected.

This button is also used during the "Auto Search" procedure when programming the remote.

⓱ **Test:** Begins the sequence used to calibrate the speaker output levels.

When the CD input has been selected and a CD recorder is in use, this button is used to select among the analog and digital inputs to the CDR.

⓲ **TV/VCR:** This button does not have a function on the DCR600 or DVD600, but when used with a compatibly programmed VCR, DVD, TV or Satellite receiver that has a "TV/Video" function, pressing this button will switch between the output of that device and the external video input to that device. Consult the owner's manual for your specific player or satellite receiver for the details of how it implements this function.

⓳ **Volume Up:** Use to raise the system volume.

⓴ **Surround Mode/Audio:** Begins the process of changing the surround mode when the DCR600 is selected. After the button has been pressed, use the ▲/▼ **Buttons** ㉕ ㉛ to select the desired surround mode.

When the DVD600 is selected, this button allows you to select from the available audio tracks or languages on a DVD disc that is currently playing.

This button is also used to tune channels when the TV is selected.

This button is also used during the "Auto Search" procedure when programming the remote.

㉑ **All Off:** Simultaneously sends Power Off commands to all programmed devices controlled by the remote.

㉒ **All On:** Simultaneously sends Power On commands to all programmed devices controlled by the remote.

㉓ **Volume Down:** Use to lower the system volume.

㉔ **Channel/Title/Guide:** Starts the process of setting the DCR600's speaker output levels using an input source rather than the test tone. Press this button, then use the ▲/▼ **Buttons** ㉕ ㉛ to select the channel being adjusted, followed by the **Set Button** ㉘. You may then use the ▲/▼ **Buttons** ㉕ ㉛ again to change the level for that channel. Press the **Set Button** ㉘ to lock in the setting.

When using the DVD600 to play a DVD disc, this button functions as a Title button, and displays the disc's Title Select Menu, or a symbol (Ø) if the disc either does not offer this function or has only one title.

When the Video 3 input has been programmed for a cable or satellite service, this button will access the service's programming guide, if the service is active.

㉕ **▲:** Used to change or scroll through items in the on-screen menus, or to change configuration settings, such as output levels. When changing an item such as the surround mode or digital input directly, first press the function or mode to be changed, such as Surround Mode or Digital Input, and then press this button to scroll through the list of available choices.

㉖ **Menu:** Used only with video sources. When DVD is selected, pressing this button while a DVD disc is playing stops playback and displays the disc's menu. When the unit is stopped, pressing this button displays the DVD600's Setup Menu.

㉗ **◀:** Used to change the menu selection or setting during some of the setup or other procedures.

㉘ **Set:** Used to enter settings into the memory of the DCR600, DVD600 or video device selected. Also used in the setup procedures for delay time, speaker configuration and channel output level adjustment. When the DVD600 has been selected, pressing this button will select the item that is highlighted in the Status Banner, or in the on-screen menu displayed by a DVD disc.

㉙ **▶:** Used to change the menu selection or setting during some of the setup or other procedures.

㉚ **Digital/Subtitle/Exit:** When the DCR600 is selected, press this button to assign one of the digital inputs to a source. When the DVD600 is selected, this button is used to change the subtitle choice. For other video devices, it exits the menu.

㉛ **▼:** Used to change or scroll through items in the on-screen menus, or to change configuration settings, such as output levels. When changing an item such as the surround mode or digital input directly, first press the function or mode to be changed, such as Surround Mode or Digital Input, and then press this button to scroll through the list of available choices.

㉜ **Delay/Return/Prev Ch.:** Begins the process for setting the delay times used by the DCR600 when processing surround sound. After pressing this button, the delay times are entered by pressing the **Set Button** ㉘ and then using the ▲/▼ **Buttons** ㉕ ㉛ to change the setting. Press the **Set Button** ㉘ again to complete the process.

This button is also used when viewing a menu display from a DVD disc. Press it to return to the previous menu screen.

㉝–㊵, ㊷ ㊸ **Numeric Keys:** These buttons serve as a ten-button numeric keypad to enter tuner preset positions. They are also used with the DVD600 to enter data for sequential programming, to enter or change the access password for parental control, to enter a language code, or to respond to menu options presented by a disc. When the TV or another video device is selected, they are used to select channel numbers. They may also be used to select track numbers when playing a CD, DVD or LD.

㊶ **Tuner Mode/Angle:** Press this button when the tuner is in use to select between automatic tuning and manual tuning. When the button is pressed so that the **AUTO** indicator **V** goes out, pressing the **Tuning Buttons** ㊺ ㊾ **8** will move the frequency up or down in single-step increments. When the FM band is in use, pressing this button when a station's signal is weak will change to monaural reception.

When a DVD encoded with multiple-angle information is playing, press to change the angle in use. Note that this function is only available on discs that are specially prepared to take advantage of the multiple-angle function, and only for those parts of the disc that are recorded with multiple-angle content. The DVD600 will display a camera icon on the screen to indicate when this feature is available.

㊹ **Memory:** Enters a radio station into the DCR600's preset memory. Once the **MEMORY Indicator** **S** flashes, you have five seconds to enter a preset memory location using the **Numeric Keys** ㉝–㊵, ㊷ ㊸. Repeat the process to enter additional stations.

㊺ ㊾ **Tuning Up/Down/Step (Frame Advance) Buttons:** When the tuner is in use, these buttons will tune up or down through the selected frequency band. If the **Tuner Mode Button** ㊶ **12** has been pressed so that the **AUTO Indicator** **V** is illuminated, pressing and holding either of the buttons for three seconds will cause the tuner to seek the next station with acceptable signal strength for quality reception. When the **AUTO Indicator** **V** is NOT illuminated, pressing these buttons will tune stations in single-step increments.

When a DVD disc is playing, press these buttons to move forward or backward one frame at a time. Press the **Play Button** ㊽ **10D** to resume normal play. These buttons do not function when a CD is playing.

㊻ **Direct/Program Button:** Pressing this button in tuner mode starts the sequence for direct entry of a station's frequency or CD track. After pressing the button, simply press the proper **Numeric Keys** ㉝–㊵, ㊷ ㊸ to select a station or track.

When the DVD600 is stopped, press this button to display the program menu and enter a programmed play sequence. When a disc is playing, press to switch between normal play and programmed playback.

㊼ **Clear Button:** Erases incorrect entries when using the remote to directly enter a radio station's frequency.

When the DVD600 has been selected, press this button to remove the Status Banner or other displays from your video screen. This button is also used to clear items from Programmed Play lists.

48 52 Preset Up/Down/Slow-Play Buttons: When the tuner is in use, press these buttons to scroll through the stations programmed into the DCR600's memory.

When a DVD disc is playing and the DVD600 has been selected, press these buttons to move forward or backward through the disc in slow speed. Each press of these buttons changes the slow-play speed in the following order: 1/16 Normal Speed → 1/8 Normal Speed → 1/4 Normal Speed → 1/2 Normal Speed. To resume normal play, press the **Play Button** 58 10D . These buttons do not function when a CD is playing.

50 Night Mode/Random: Activates the Night mode of the DCR600. This mode is available in specially encoded digital sources, and it preserves dialogue (center-channel) intelligibility at low volume levels.

When the DVD600 has been selected, press to begin the playback of all tracks on a disc in random order.

51 Disc Skip Button: Press to move to the next available disc in the tray when using a DVD or CD player. This button has no direct effect on the DCR600.

53 Check: This button only functions when the DVD600 has been selected. When a CD is playing, press this button to check the status of the current disc via the on-screen display. This button is also used to verify the contents of a programmed play list via the front-panel Information Display.

54 Subtitle On/Off: This button only functions when the DVD600 has been selected. When a DVD is playing, press this button to turn the Subtitle Display on or off.

55 Repeat: This button only functions when the DVD600 or a CD player has been selected. Press to select a Repeat-Play mode. Each press of the button shows the choice selected in both the on-screen Status Banner display or in the **Repeat Indicators** in the front-panel Information Display.

56 Repeat A–B: This button only functions when the DVD600 has been selected. Press once to begin the selection of a portion of a disc to be repeated. Press it again to choose the end point of the repeat-play selection.

NOTE: When any of the following buttons 57–64 is pressed while the remote has selected the Main Page, the remote will automatically switch to control of the DVD, as indicated by the DVD **Input Selector** 4 lighting.

57 Reverse Search/Rewind: When the DVD600 has been selected, press to move backward through a CD or DVD at one of four speeds. Each press and release will increase the search speed, in the following order: R. Search x 2 → R. Search x 4 → R. Search x 8 → R. Search x 16. Once you have selected the desired speed, release the button, and the disc will continue to search at fast speed. To resume normal playback, press the **Play Button** 58 10D .

When a tape deck or VCR has been selected, this button rewinds the tape.

58 Play Button: Press to begin playback when the DVD600 has been selected. If the disc tray drawer is open, it will automatically close when the button is pushed. Pressing the Play button when the unit is in the Standby mode will turn the unit on and begin playback of the last disc in use.

When a CD player, tape deck or VCR has been selected, pressing this button will also begin playback. See the owner's manual for that device for more information on the operation of the play function as it affects that device.

59 Forward Search/Fast Forward: When the DVD600 has been selected, press to move forward through a CD or DVD at one of four speeds. Each press and release will increase the search speed, in the following order: F. Search x 2 → F. Search x 4 → F. Search x 8 → F. Search x 16. Once you have selected the desired speed, release the button, and the disc will continue to search at fast speed. To resume normal playback, press the **Play Button** 58 10D .

When a tape deck or VCR has been selected, this button fast-forwards the tape.

60 Record Button: This button only functions when a CD/CDR, tape deck or VCR connected to the Video 1 input has been selected. See the owner's manual for that device for further information on how to make recordings.

61 Stop Button: This button has no effect on the DCR600. When the DVD600 has been selected, press this button once to place the disc in the Resume mode. Playback will stop, and as long as the tray is not opened or the disc changed, DVD playback will continue from the same point on the disc when the **Play Button** 58 10D is pressed again, even if the unit has been turned off in the interim. To stop a disc without entering Resume mode, press the Stop button twice.

This button also performs the Stop function when a CD player, tape deck or VCR connected to the Video 1 input has been selected.

62 Pause Button: Press to pause the disc in use. To resume playback, either press the Pause button again, or press the **Play Button** 58 10D .

63 64 Previous/Next: Press to move backward or forward through the music tracks on a CD disc or the chapters on a DVD disc. This button also scans backward or forward when a VCR connected to the Video 1 input has been selected.

TROUBLESHOOTING (both the DVD600 and DCR600)

Processor Reset

In the rare case where the DCR600's operation or the displays seem abnormal, the cause may involve the erratic operation of the system's memory or microprocessor.

To correct this problem, first unplug the unit from the AC wall outlet and wait at least three minutes. After the pause, reconnect the AC power cord and check the unit's operation. If the system still malfunctions, a system reset may clear the problem.

To clear the DCR600's entire system memory including tuner presets, output level settings, delay times and speaker configuration data, first put the unit in Standby by pressing the **System Power Control Button** 2. Next, press and hold the **Tone Mode** 6 and the **FM Mode Selector** 12 buttons for three seconds.

The unit will turn on automatically and display the RESET message in the **Main Information Display** W. Note that once you have cleared the memory in this manner, it is necessary to reestablish all system configuration settings and tuner presets.

NOTE: Resetting the processor will erase any configuration settings you have made for speakers, output levels, surround modes and digital input assignments, as well as the tuner presets. After a reset, the unit will be returned to the factory presets, and all settings for these items must be reentered.

If the system is still operating incorrectly, there may have been an electronic discharge or severe AC line interference that has corrupted the memory or microprocessor.

If these steps do not solve the problem, consult an authorized JBL service center.

In the event that you forget the password for the DVD600, you may reset it to the factory default by following this procedure: In Standby mode, press the **Search Back** 5D and **Skip Forward** 7D buttons on the front panel simultaneously for more than 3 seconds. The **Information Display** W will light, and a test pattern will appear on your TV. Press **Power On** 2 to proceed.

SYMPTOM	PROBABLE CAUSE	SOLUTION
DCR600 does not function when Main Power Switch is pushed	• No AC Power	• Make certain AC power cord is plugged into a live outlet. • Check to see whether outlet is switch-controlled.
DVD600 does not turn on	• Main Power Switch turned off • No AC power	• Press in Main Power Switch. • Check AC power plug and make certain any switched outlet is turned on.
Display lights, but no sound	• Intermittent input connections • **Mute** is on • Volume control is down	• Make certain that all input and speaker connections are secure. • Press **Mute** button. • Turn up volume control.
Unit turns on, but front panel display does not light up	• Display brightness is turned off	• Follow the instructions in the Display Brightness section so that the display is set to VFD FULL.
No sound from any speaker; light around power switch is red	• Amplifier is in Protection mode due to possible short • Amplifier is in Protection mode due to internal problems	• Check speaker wire connections for shorts at receiver and speaker ends. • Contact your local JBL service center.
No sound from any speaker	• No audio signal is being transmitted to the speakers • If in DVD mode, make sure that analog input is not accidentally assigned • Intermittent connections • Incorrect digital audio selection • DVD disc is in Fast or Slow mode	• Check that DCR600 is on and a source is playing. • Check all wires and connections between the DCR600 and speakers. Make sure all wires are connected. Make sure none of the speaker wires are frayed, cut or punctured. • Review proper operation of the DCR600. • Check Input assignment for DVD Input. DVD Input should be set to COAX 1 and the DVD600 Digital Output should be connected to **Coaxial 1 Digital Input** 25 on the DCR600. • Check all audio connections. • Check digital audio settings. • There is no audio playback on DVD discs during Fast or Slow modes.

Troubleshooting (Continued)

No sound from one speaker	• Balance is not at "12 o'clock" • No audio signal is being transmitted to the speakers	• Check the Balance control on the DCR600. • Check all wires and connections between the DCR600 and speakers. Make sure all wires are connected. Make sure none of the speaker wires are frayed, cut or punctured. • In Dolby Digital or DTS modes, make sure that the DCR600 is configured so that the speaker in question is enabled.
No sound from surround or center speakers	• Incorrect surround mode	• Select a mode other than Stereo. • Make sure the movie or TV show you are watching is recorded in a surround-sound mode. If it is not, try using another surround mode.
	• Input is monaural • Stereo or Mono program material	• There is no surround information from mono sources. • The surround decoder may not create center- or rear-channel information from nonencoded programs. • Review the operation of your DVD player and the jacket of your DVD to make sure that the DVD features the desired Dolby Digital or DTS mode, and that you have properly selected that mode using both the DVD player's menu and the DVD disc's menu.
	• No audio signal is being transmitted to the speaker	• Check all wires and connections between the DCR600 and speaker. Make sure all wires are connected. Make sure none of the speaker wires are frayed, cut or punctured.
	• Incorrect configuration	• If the DCR600 is set in Dolby Pro Logic mode, make sure the center speaker is not in Phantom mode. • If the DCR600 is set in Dolby Digital or DTS mode, make sure it is configured so that the center speaker is enabled. • In Dolby Digital or DTS modes, make sure the DCR600 is configured so that the surround speakers are enabled. • Check all wires and connections between the DCR600 and speakers. Make sure all wires are connected. Make sure none of the speaker wires are frayed, cut or punctured.
System plays at low volume but shuts off as volume is increased	• Speaker impedances are dropping too low for receiver to handle	• Check all wires and connections between the DCR600 and speakers. Make sure all wires are connected. Make sure none of the speaker wires are frayed, cut or punctured. • Do not use more than one pair of main speakers.
Low (or no) bass output	• Speakers are connected out of phase	• Make sure the connections to the left and right Speaker Inputs have the correct polarity (+ and –).
	• Subwoofer not activated	• Make sure the subwoofer is plugged into an active electrical outlet and turned on.
	• Subwoofer output of DCR600 not enabled	• In Dolby Digital or DTS modes, make sure the DCR600 is configured so that the subwoofer and LFE output is enabled.
Unit does not respond to remote commands	• Weak batteries in remote • Wrong device selected • Remote sensor is obscured	• Change remote batteries. • Press the **Main** 8 or **DVD** 4 selector. • Make certain front panel sensor is visible to remote or connect remote sensor.
Intermittent buzzing in tuner	• Local interference	• Move unit or antenna away from computers, fluorescent lights, motors or other electrical appliances.
Letters flash in the channel indicator display and digital audio stops	• Digital audio feed paused	• Resume play for DVD. • Check that Digital Input is selected.

Troubleshooting (Continued)

Disc does not play	• Disc loaded improperly • Incorrect disc type • Invalid Region Code • Rating is above parental preset	• Load disc label-side up. • Check to see that disc is CD, CD-RW, DVD-Movie or Video CD; other types will not play. • Use Region 1 disc only. • Enter password to override or change rating settings.
No picture	• Intermittent connections • Wrong Input	• Check all video connections. • Check input selection of TV or DCR600.
Picture is distorted or jumps during Fast Forward or Reverse Play	• MPEG-2 decoding	• It is a normal artifact of DVD playback for pictures to jump or show some distortion during rapid play.
Some remote buttons do not operate during DVD play	• Function not available for this disc	• Some discs do not include all DVD features.
The menu is in a foreign language	• Incorrect menu language	• Change menu language selection.
"Ø" symbol appears	• Requested function not available at this time	• Certain functions may be disabled during passages of a disc.
Picture is displayed in the wrong aspect ratio	• Incorrect match of aspect ratio settings to disc	• Change Aspect Ratio settings.
Disc will not copy to VCR	• Macrovision protection	• Most DVDs are encoded with Macrovision to prevent copying to VCR.

Troubleshooting Model : DVD600

1) **Power.** : When the ST/BY +5V of Front is transmitted to Power control port, the power of SMPS will be switched. And unit turns on.
   - Check point : Power control port : CP214, 1pin
   - Actually the input power is +3.5V, and if the unit does not turn on, all the power which supplies for Main is OFF.

2) Communication between Front CPU and STI5505
   - Check point : CN208 & RXD/TXD port.
   - When the Main Board system is initializing, Sti5505 dispatches data to Front CPU in order to wake it up.
   - If the 1)power and 2)communication between Front CPU and Sti5505 are normal, but still there are Open/short errors, so we call " Power on" error, it because can not wake up Front CPU.
     ! RXD/TXD : Receiving / Transfer data port (Main = RXD, Front TXD at PCB)

3) Operation of STI5505
   - Checking of each RAMs (Flash/DRAM → SDRAM) / EEPROM. => At this time, SCL/SDA should be High. If they are low, the Sti5505 is not waken up.
   - In case of Sti5505 does not wake up properly, Main clk (27.0MHz) is normal, but SDRAM clk is not normal.
   - Check point : R350
   - When initialize MECHA by reset, the CPU of Front-end is in initial operation.
     (Pick up down → rotating Roulette/ sensing → Disc sensing → Roulette fixed → Pick up → ST/BY mode)

4) Main and Flash reset
   - Check point : C312

5) If you find any problems for operation initializing , after being satisfied above condition, need to check Mecha control line
   - Check point : CP206, power and connection including soldering.

6) Test screen (color bar) / initial screen (stop screen : Vendor Logo screen)
   - **Test screen** : All data but Logo screen is taken care by SDRAM.

     → Also you can easily check with using 2keys on Front Panel. (! Already issue data regarding these two keys)
   - Also, this mode is used for RESET as initial default value regarding Set up menu which is in EEPROM(M24C02)
   - Set up menu Reset : OSD user Menu → user setting → restoration default value.
     Ex.) Password…
   - **Vendor Logo screen** : When Power on, the Logo screen which is in Flash-RAM goes to DRAM.
   - Thus, if the initial logo screen is not been displayed, it because of DRAM line.
     Regarding MP set → it may be caused from poor soldering.

7) Audio.
   - Serial data(24bit/fs =48KHz) is transmitted to AK4393(DAC) at Sti5505.
   - If set does not make any image on screen also audio data does not come out.
     DATA Process:
     Serial data +/-L/ R L / R double-mute
     Sti5505 → AK4393 → CH mixing AMP → Gain AMP → Audio Out
   - Mute : Double-mute at Out board. (Mute power <– ST/BY +5V).

8) Video.
   - The data is taken care by SDRAM. Need 8M for NTSC & need 16M for PAL.
   - Sti5505(Decoder – video signal:C-V, COMPOSITE, COMPONENT) → TSH95(Video 6dB gain AMP) → Output.
   - TSH95 : handling ST/BY mute by switching bias at internal AMP. ➔ check point : #8 and #9 Pin.
   - If ST/By +5V,Mute power, is dropped , Mute will be on and it causes no signal on screen or only see black and white screen intermittently.
   - Mute on : 8(H) / 9(L). Mute off : 8(L) / 9(H) → High power should be over than 2.5V
   - ST/BY +5V power is dead if Diode (1N4004) on Front board burn.

9) Digital output (Coaxial)
   * High speed inventor → Pulse Trans(TS801: purpose impedance matching).

Service Bulletin

Service Bulletin JBL2003-09 - November 2003 | This is considered a Minor repair

To: All harman/kardon Service Centers

Model: DVD600

Subject: Replacement of Laser Pick-up Assembly

In the event you receive a DVD600 where a Laser Pick-up Assembly replacement is warranted, the original DVD600 mechanism is no longer available. Follow the instructions below to add a new replacement mechanism:

CAUTION: FOLLOW PROPER STATIC CONTROL PROCEDURES TO PREVENT DAMAGE TO THE DVD600 DURING LOADER MODULE REPLACEMENT

I) Order the following parts:

1) Laser Pick-up Ass'y (TVK15-1AA/502T)	h/k part# 10733290RETRO
2) 10 wire - FCC CABLE	h/k part# 55174870
3) 12 wire - FCC CABLE	h/k part# 55174860

II) DVD600 Loader Module Removal

1) With the unit plugged in, turn the unit ON. Eject the tray by pressing the Open/Close button.
2) The gray front faceplate should be removed from the tray. This is accomplished by holding the main part of the tray firmly, and pulling UP on the front faceplate; detach it and set aside. Retract the tray back into the unit by pressing the Open/Close button again. Turn unit OFF and unplug it.
3) Remove the top cover. (10 Phillips screws)
4) Unplug all ribbon connectors (3) from the decoder PCB and Power Supply PCB that connect to the loader ass'y. Cut any cable ties that would prevent removal of the mechanism.
5) Remove the 4 plated Phillips screws that hold the entire 5 disc CD mechanism down to the bottom panel assy.
6) Pull the mechanism slightly up in the rear and remove the entire mechanism out the rear of the unit.

Figure 1. New Replacement Loader for DVD-5

III) Replace DVD600 Laser Pick-up Ass'y (TVK15-1AA/502T) with h/k part# 10733290RETRO.

1) Replace both cables; be sure to attach the black grounding screw. Replace the entire 5 disc CD mechanism back into the unit and fasten with the 4 plated Phillips screws. Assure no cables are binding or "pinched".

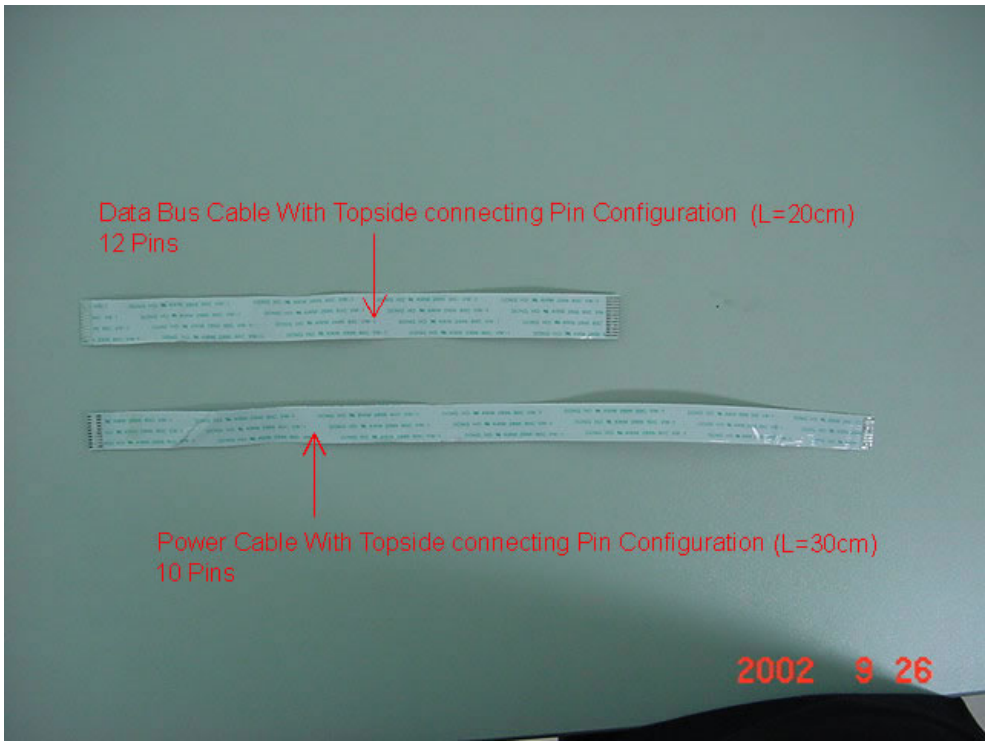

Figure 2. Flex Cables Required for Replacing New DVD600 Loader

2) Connect mechanism to power supply with 10 wire - FCC CABLE, part# 55174870.

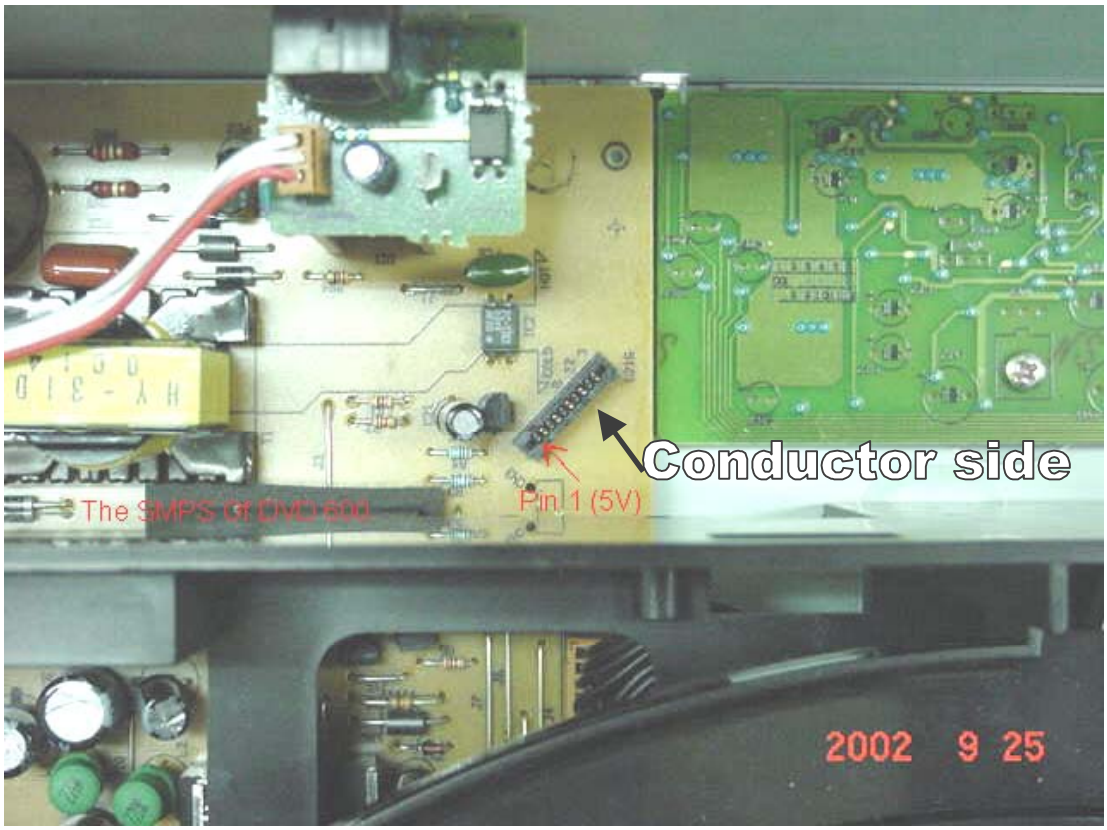

Figure 5.

3) Connect New Data Bus Cable From Loader To *Main PCB,* using 12 wire - FCC CABLE part# 55174860.

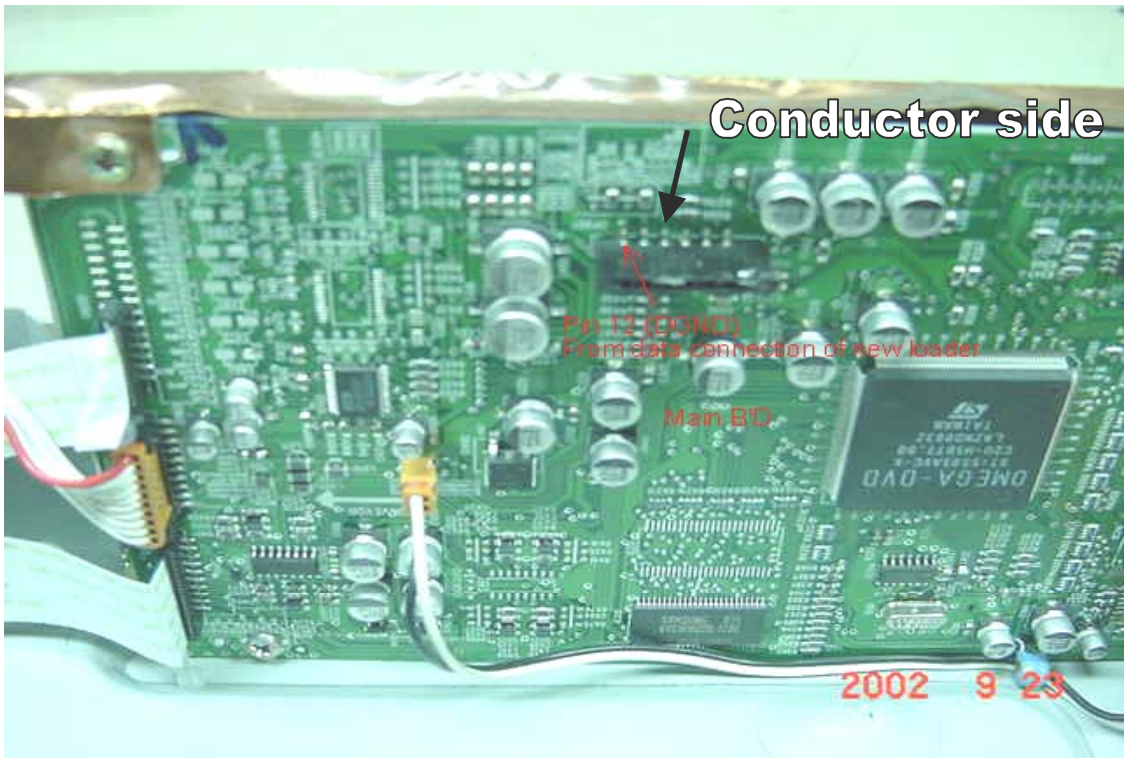

Figure 6. The data bus connector of ***Main B'D***

4) Replace molex connector and replace any cable ties that were cut.

IV) Reassemble and test the unit; replace front faceplate and top cover.

Service Bulletin

Service bulletin # JBL2003-10 December 2003

Warranty labor rate: MINOR repair

To: All harman/kardon Service Centers

Model: DVD600

Subject: Stays in Standby Mode

In the event you receive a DVD600 with one or more of these symptoms:

- Unit stays in Standby mode (amber indicator light)
- Unit will play for a time period, *then* goes into Standby mode (amber indicator light)

Check and replace capacitors C10 and C11 in the power supply. Defective parts may not have any visual clues; they must be tested.

Procedure:

1) Remove the top cover.
2) Disconnect the three ribbon connectors that connect the 5 disc main assembly to the decoder PCB (2) and power supply (1).
3) Remove the 4 screws that hold the 5 disc main assembly down to the bottom panel.
4) Pull the chassis slightly up in the rear, and pull the entire assembly out the back.
5) To access the power supply, remove the six plated screws; unplug the two large Molex 2-pin connectors.
6) Remove and replace: C10,C11: **h/k part# P10248-ND** ELECT 470uf 16v 105c radial capacitor
7) Reinstall in reverse order. Take care not to pinch or crush any cables; assure ground terminal is reconnected on the front left chassis screw.

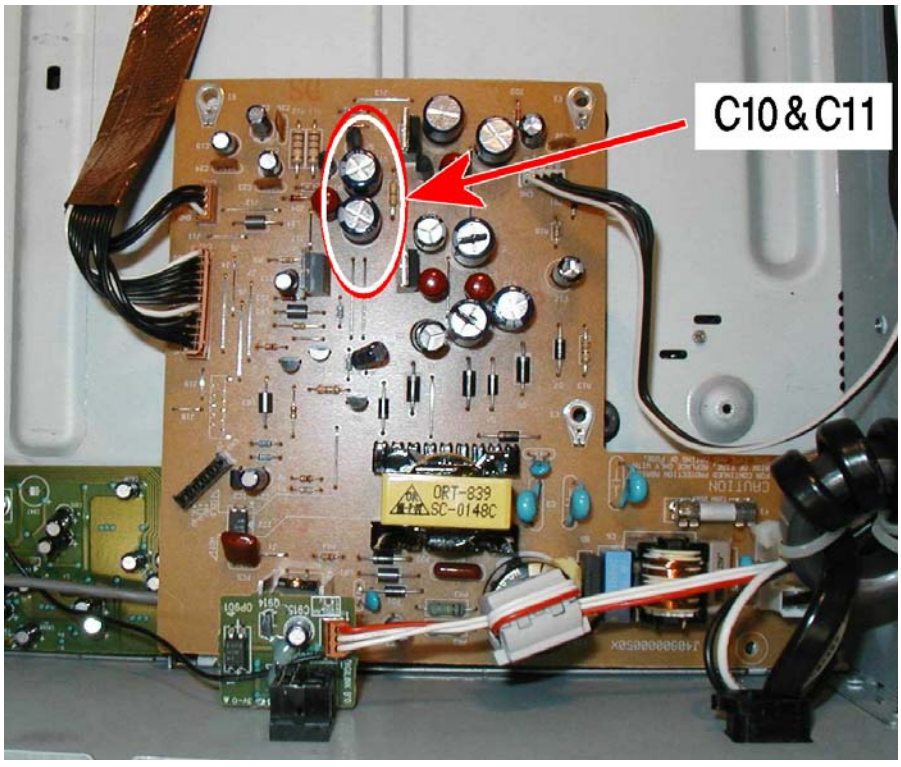

TECH TIPS

Troubleshooting tips and solutions to common service problems

For models: DVD600 (from the Cinema ProPack 600 System) **TIP# JBLTT2003-02**

Subject: Opening Tray Without Power

In the event you receive a DVD600 without power, and you have a need to open the tray manually:

1) Remove the top cover.
2) Remove the (4) screws holding the plastic chassis to the bottom.
3) Pull the cables from the plastic chassis.
4) Pull connectors in back of the front escutcheon.
5) Remove the (2) screws on bottom front, holding the front metal chassis to the bottom cover.
6) Tilt entire front panel and chassis up in back, down in front.
7) Reach under mechanism, find hole for gear set.
8) Turn gears to open the drawer.

DVD600 EXPLODED VIEW

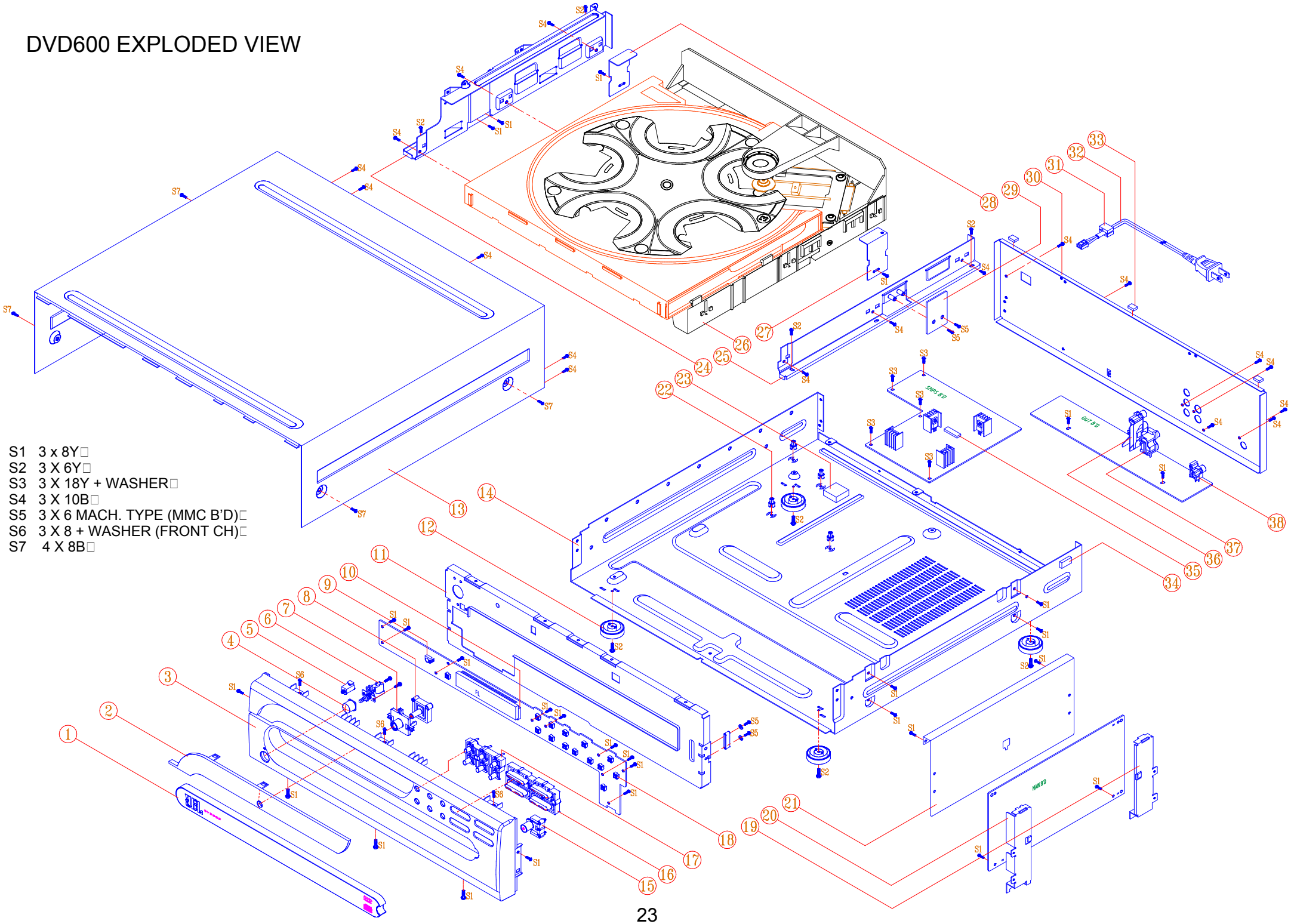

S1 3 x 8Y□
S2 3 X 6Y□
S3 3 X 18Y + WASHER□
S4 3 X 10B□
S5 3 X 6 MACH. TYPE (MMC B'D)□
S6 3 X 8 + WASHER (FRONT CH)□
S7 4 X 8B□

DVD600 EXPLODED VIEW PARTS LIST

1	J85600021000	DOOR TRAY DVD600	1
2	J85300030000	WINDOW DISPLAY DVD600	1
3	J85000028000	PAMEL FRONT DVD600	1
4	J85200140000	BUTTON POWER	1
5	J85400023000	INDICATOR POWER	1
6	J46203000101	PWR SW SDDLB14700	1
7	J85400054000	CAP BUT DIMMER DVD600	1
8	J85200136100	BUTTON DIMMER	1
9	J67300010000	SPONGE SENSE	1
10	J67300009000	SPONGE FL	2
11	J60020002300	CHASSIS FRONT	1
12	J85900501100	FOOT-ASS'Y DCR600	4
13	J60100004200	COVER TOP DVD600	1
14	J60000006000	CHASSIS MAIN	1
15	J85200135000	BUT OPEN/CLOSE DVD600	1
16	J85200138000	BUT PLAY DVD600	1
17	J85200137000	BUT DISC DVD600	1
18	J46500500501	SW TACT SKQNAE	14
19	J60300023100	BKT MPER REAR	1
20	J60300023000	BKT MPEG FRONT	1
21	J60600008000	SHIELD MPEG FRONT	1
22	J85820001100	SPACER PCB	4
23	J67300013000	SPONG CUSHION	1
24	J60200007000	FRAME MECHA L	1
25	J60200007200	FRAME MECHA R	1
26	4KTDCD5D002A	ASS'Y CDM5E	1
27	J60300045000	BKT MECHA RIGHT	1
28	J60300045200	BKT MECHA LEFT	1
29	J60300044000	BKT MECHA MID	1
30	J60110004500	PANEL REAR DVD600	1
31	J65100000100	BUSHING-AC CORD	1
32	J43730100100	CORD POWER UL SPT2	1
33	J94100008000	SHIELD FORM	3
34	J94100006000	SHIELD FORM	6
35	J67300013000	SPONG CUSHION	1
36	J44303000200	RCA JACK 3P RBG	1
37	J44312000100	RCA JACK + S GNDCAP	1
38	J44301000600	RCA JACK 1P BK GRD	1
	J97200501000	PCB SPONGE	1
	J5541001020X	WASHER FLAT	1
	JDVD5RUBBER1	RUBBER	1
	20979920XX	AC BUFFER CDM5B	1
	J85900503000	FOOT-RUBBER	1
	J4090000050X	POWER SUPPLY MODULE	1
	J80600031810	SCREW TAP 3.0*18	1
	J5636140010X	SCREW	1
	J60300036000	BKT GROUND MECHA	1
	J5636130080X	SCREW	1
	20349570XX	SCREW 3.0MM 06MM JIS B 1111	1
CN905	J4350009908X	CNT 500 #18 7.92	1
	J5636140040X	SCREW	1
	J5636140150X	SCREW	1
	55049000XX	SCREW-ST 3MM 06MM JIS B	1
	20411990XX	AC FOOT RUB SQ 21MM X 21MM	1

COMPLETE **DVD600 LASER PICK-UP ASSEMBLY, JBL# 10733290RETRO - SEE PAGE 18**

TO EXPOSE AND SERVICE THE DVD600 POWER SUPPLY – DISASSEMBLY PROCEDURE

1) Remove the top cover
2) Remove the (4) screws holding the plastic chassis to the bottom.
3) Pull the cables from the plastic chassis.
4) Pull connectors in back of the front escutcheon
5) Remove the (2) screws on bottom front, holding the front metal chassis to the bottom cover.
6) Tilt entire front panel and chassis up in back, down in front.
7) Reach under mechanism, find hole for gear set.
8) Turn gears to open the drawer.
9) Remove front door.
10) Pull entire plastic chassis up in back and out of the unit.
11) Power supply is now exposed.

HY-31D5

DVD600

LOAD TABEL

3.3V/0.7A 5VS/0.1A 5V/0.56A 8V/0.3A 12V/0.1A

M12/0.3A -5V/0.10A -12V/0.05A -30V/0.03A 5.4V/0.15A

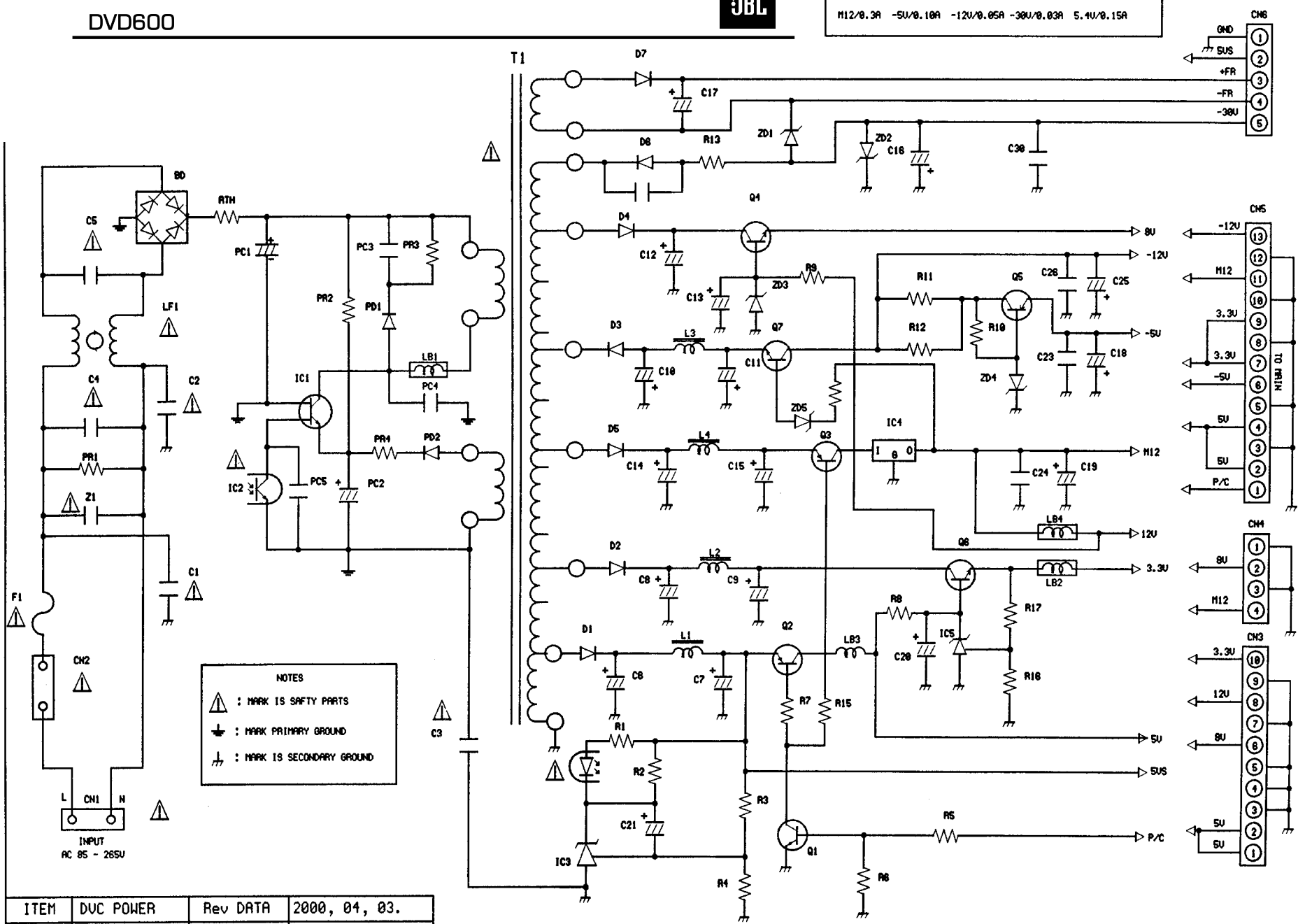

ITEM	DVC POWER	Rev DATA	2000, 04, 03.
DWG NO	FHY3003 KS	DESIGN BY	JONG HEUN KIM

Note on the DVD600 Power Supply:

Complete PS part# J4090000050X is no longer available; the Power Supply must be repaired to component level.

The parts list and schematic, supplied for reference purposes only, may contain some part numbers that are not valid, or No Longer Available.

Descriptions and Reference Designators, when included, should aid technicians in part substitution.

If necessary, call the Parts department at 1-516-496-3400 ext. 6553 for assistance.

PARTS LIST

00-04-25

NO	ITEM	SPECIFICATION	DESCRIPTION	VENDOR	Q'TY	LOCATION
1	P.C.B.	FR-1 (HY-31D5)	150X170mm	GANA	1	
2	WAFER	YW396-03AV	WHITE COLOR(2PIN)	YEONHO	1	CN1, CN2
		HLW3960-N-3		HAECHANG		
3	WAFER	GIL-S-13P-S2T2EF	13PIN	LG CABLE	1	CN5
4	WAFER	GIL-S-4P-S2T2EF	4PIN	LG CABLE	1	CN4
5	WAFER	8370-10P(STRAIT)	10PIN FOR US	ELCO	1	CN3
		90325-0010	10PIN FOR EU	MOLEX		
6	LEAD CONNECTOR		5PIN	HWASUNG		CN6
	ASS'Y			TAEPYOUNGSA		
7	C CERA	DG 102M 250VAC	1uF	SAMHWA	3	C1,C2,C3
		SD 02M 400VAC				
8	LINE ACROSS	PCX2 335 104 AC275V	100uF	SUNGIL	1	C4
9	LINE ACROSS	PCX2 335 473 AC275V	47uF	SUNGIL	1	C5
10	C ELECTRO	400V 68uF	22X25 80℃	DAEWOO	1	PC1
11	C MYLAR	630V 223J	22uF	RUBYCON	1	PC3
12	C CERA	1KV 101K	0.1uF	RUBYCON	2	PC4,C22
13	C ELECTRO	RG 50V 22uF	5X11 80℃	SMAHWA	1	PC2
		MH5 50V 22uF		RUBYCON		
14	C MYLAR	100V 104J	100uF	DAEYOUNG	1	PC5
15	C ELECTRO	RG 50V 1uF	5X11 80℃	SMAHWA	1	C21
		MH5 50V 1uF		RUBYCON		

HWAYOUNG ELECTRONICS CO., LTD

PARTS LIST

00-04-25

NO	ITEM	SPECIFICATION	DESCRIPTION	VENDOR	Q'TY	LOCATION
16	C ELECTRO	RG 10V 1000uF	10X16 80℃	RUBYCON	2	C6,C7
17	C ELECTRO	RG 16V 470uF	10X13 80℃	RUBYCON	5	C10,C11,C12,C14,C15
18	C ELECTRO	RG 50V 10uF	5X11 80℃	RUBYCON	5	C13,C18,C19,C20,C25
19	C ELECTRO	RG 10V 470uF	8X12 80℃	RUBYCON	2	C8,C9
20	C ELECTRO	RG 50V 47uF	6.3X11 80℃	RUBYCON	1	C16
21	C ELECTRO	RG 10V 220uF	6.3X11 80℃	RUBYCON	1	C17
22	C CERA	50V 104Z	100uF	KIYOUNG	4	C23,C24,C26,C30
23	DIODE F/R	UF4005,SUF4007,HER106	1000V 1A	PYUNGCHANG	1	PD1
24	DIODE F/R	1N4937	600V 1A	PYUNGCHANG	2	PD2,D7
25	DIODE F/R	ER202	200V 2A	PYUNGCHANG	3	D1,D2,D5
		SF24		DAEBO		
26	DIODE F/R	ER102	200V 1A	PYUNGCHANG	1	D6
		SF14		DAEBO		
27	DIODE F/R	ER101,ER102	200V 1A	PYUNGCHANG	2	D3,D4
		SF14		DAEBO		
28	DIODE BRIDGE	KBP205,PBP205	500V 2A	DAEBO	1	BD
29	DIODE ZENOR	UZ9.1BSA	50mW(8.57V~9.01V)	PYUNGCHANG	1	ZD1
30	DIODE ZENOR	UZ33BSB		PYUNGCHANG	1	ZD2

HWAYOUNG ELECTRONICS CO., LTD

PARTS LIST

00-04-25

NO	ITEM	SPECIFICATION	DESCRIPTION	VENDOR	Q'TY	LOCATION
31	DIODE ZENOR	UZ9.1BSB		PYUNGCHANG	1	ZD3
32	DIODE ZENOR	1N5232 1/2W 5.6V		PYUNGCHANG	1	ZD4
33	DIODE ZENOR	18V		PYUNGCHANG	1	ZD5
34	FUSE	55T 250V 2A	ALL MARKING	SAMJU LITTLE	1	F1
		50CT 250V 2A				
35	FUSE CLIP	PFC 5000-0702	AUTO INSERT TYPE	SAMJU LITTLE	2	F1a,F1b
36	IC PWM	1M0380R-YDTU		SAMSUNG	1	IC1
37	PHOTO-COUPLER	LTV817C	7.8mm C-GRADE	LITEON	2	IC2
		PC-17K1		KODENSHI		
38	IC REGULATOR	KA431AZ-MTA		SAMSUNG	2	IC3,IC5
39	IC REGULATOR	KA7812	12V 1A	SAMSUNG	1	IC4
40	TR	KSC945CY	50V 150mA	SAMSUNG	1	Q1
		C3198				
41	TR	KSA1273Y		SAMSUNG	3	Q2,Q3,Q5
		KSA928A				
42	TR	TIP41C	100V 6A	SAMSUNG	2	Q4,Q6
		KSD2058-YTU				
43	TR	KSC3205Y		SAMSUNG	2	Q7
		KSC2328A				
44	LINE FILTER	SQ2014	30mH	HWAYOUNG	1	LF1
45	CHOKE COIL	L0811	22uH	HWAYOUNG	4	L1,L2,L3,L4

HWAYOUNG ELECTRONICS CO., LTD

PARTS LIST

00-04-25

NO	ITEM	SPECIFICATION	DESCRIPTION	VENDOR	Q'TY	LOCATION
46	BEAD COIL		5uH	SAMHWA	4	LB1,LB2,LB3,LB4
47	R METAL-OXIDE	1W 120K		JAEYOUNG	1	PR3
				PILKOR		
48	R METAL-OXIDE	1W 330K		SUNGIL	1	PR2
				PILKOR		
49	R CARBON FILM	1/6W 20		JAEYOUNG	1	PR4
		1/8W 20				
50	R CARBON FILM	1/6W 820		JAEYOUNG	1	R1
		1/8W 820				
51	R CARBON FILM	1/6W 1K		JAEYOUNG	3	R2,R5,R6
		1/8W 1K				
52	R CARBON FILM	1/6W 11KF		JAEYOUNG	1	R3
		1/8W 11KF				
53	R CARBON FILM	1/6W 10KF		JAEYOUNG	1	R4
		1/8W 10KF				
54	R CARBON FILM	1/4W 56		JAEYOUNG	1	R7
55	R CARBON FILM	1/6W 33		JAEYOUNG	1	R8
		1/8W 33				
56	R CARBON FILM	1/6W 470		JAEYOUNG	2	R9,R10
		1/8W 470				
57	R CARBON FILM	1/2W 100		JAEYOUNG	2	R11,R12
58	R CARBON FILM	1/4W 100		JAEYOUNG	1	R13
59	R CARBON FILM	1/6W 2K		JAEYOUNG	1	R14
		1/8W 2K				
60	R CARBON FILM	1/4W 470		JAEYOUNG	1	R15

HWAYOUNG ELECTRONICS CO., LTD

PARTS LIST

00-04-25

NO	ITEM	SPECIFICATION	DESCRIPTION	VENDOR	Q'TY	LOCATION
61	R CARBON FILM	1/6W 35KF		JAEYOUNG	1	R16
		1/8W 35KF				
62	R CARBON FILM	1/6W 13KF		JAEYOUNG	1	R17
		1/8W 13KF				
63	TRANSFORMER	HY-31D5	950uH-EER2828	HWAYOUNG	1	T1
64	VARISTOR	SVC471D--10A		SAMHWA	1	Z1
		DNR10D471K		HYUNWOO		
65	THERMISTOR	5D9		SUYANG	1	RTH
66	JUMP-WIRE	0.65mm	SOLDER COATED	DAE-A LEAD	18	J1,J2,J3,J4,J5,J6,J7,J8,
						J10,J11,J12,J13,J14,J15
						J17,J18,J19
67	HEAT SINK	GN26900(30)	30mm	GANA	1	IC1a
68	SCREW	3X8			1	IC1b
69	LOG EARTH	4Φ		DONGYANG	4	E1,E2,E3,E4
70	SOLDER WIRE	RS63-0.8A	SN63,PB37	ALPHA		
71	SOLDER BAR	S63S-B20	SN63,PB37	ALPHA		
72	FLUX THINNER	I.P.A				
73	AUTO FLUX	JS-95TVS				
74	CARTON BOX					

HWAYOUNG ELECTRONICS CO., LTD

BLOCK DIAGRAM

DVD600

NO	DATE	POS.	CONTENTS	NO	DATE	POS.	CONTENTS

LEFT CHANNEL
(SAME AS RIGHT CANNEL)

IC901
CPU CXP82324

FL

+5VS
FL AC
FL AC
-30V

F-OE
F-CE
(8M X 2EA OPTION)

MIXED LR MUTE
RESET MAIN
AUDIO MUTE2
VIDEO MUTE2
POWER CTRL
OPTION
TxD
RxD
REGION

A-MUTE
A-MUTE2
H/P-MUTE

IC210
FLASH MEMORY
8MBIT*2EA/16MBIT*1EA
M29F800T-90N1

ADDR*
F-WE
F-RESET
F-DE
DATA*

~AC CORD

+12V(VIDEO)
LOADING-VCC(+9V)

SMPS

POWER-CTRL
+5VD
+5VA(VIDEO)
-5VA(VIDEO)
+3V3D
+3V3A
+12V(AUDIO)
-12V

+5VA
+5VD
TRACK-VCC(+8V)
DISC-VCC(+12V)
+3V3D

IC213
SDRAM-16MBIT
KM416S1020CT-G/F-8

SD-D*
LDQM
SD-WE-
SD-CAS-
SD-RAS-
SD CS0-
UDQM
SD-CLK

"PAL" OPTION

IC214
SDRAM-16MBIT
KM416S1020CT-G/F-8

SD-D*
LDQM
SD-WE-
SD-CAS-
SD-RAS-
SD CS1-
UDQM
SD-CLK

IC201
STI5505
MPEG

TVM501
F/E & MECHA

EXT-PSTART/ERROR
EXIT-DATAVALID
EXIT-DATA
EXIT-BCLK
+5V-RESET
IRQ2
F/E SCL
F/ESDATA

CAROUSEL_CCW_CTRL(*N.C)
CAROUSEL_CW_CTRL(*N.C)
CAROUSEL_POSITION_SENSOR(*N.C)
DISC_SENSOR(*N.C)
DRAWER_POSITION_PI1(*slider_open/close)
DRAWER_POSITION_PI2(*N.C)
DRAWER_CCW_CTRL(*slide_in)
DRAWER_CW_CTRL(*slide_out)
LOADING_VCC +9V
+5VD_C

(* : single DVD option)

SDA
SCL
EEPROM
M24C02
IC215

PIXCLK-27MHZ

IC204
74HCU04

CVBS-OUT
Y-OUT
C-OUT
B.N.F

IC406-A
TSH95
IC406-B
TSH95
IC407-A
TSH95
IC407-B
TSH95

C-VIDEO
S-VIDEO

VIDEO-MUTE
VIDEO-MUTE2
+5V ST/BY

R-OUT
G-OUT
B-OUT
Band Notch Filter

+5V
-5V

IC805-A
TSH95
IC805-B
TSH95

Y
Pr
Pb

IC807
TC7WU04F
BUFFER

SPDIF
T/M
TRANS801
COAXIAL

FILENAME BLOCK	CODE NO. BLOCK			SHEET 1/1
MODEL DVD600	DESIGN	CHKD	CHKD	APPROVAL
DESIGN DATE 2000.12.15				

BLOCK DIAGRAM

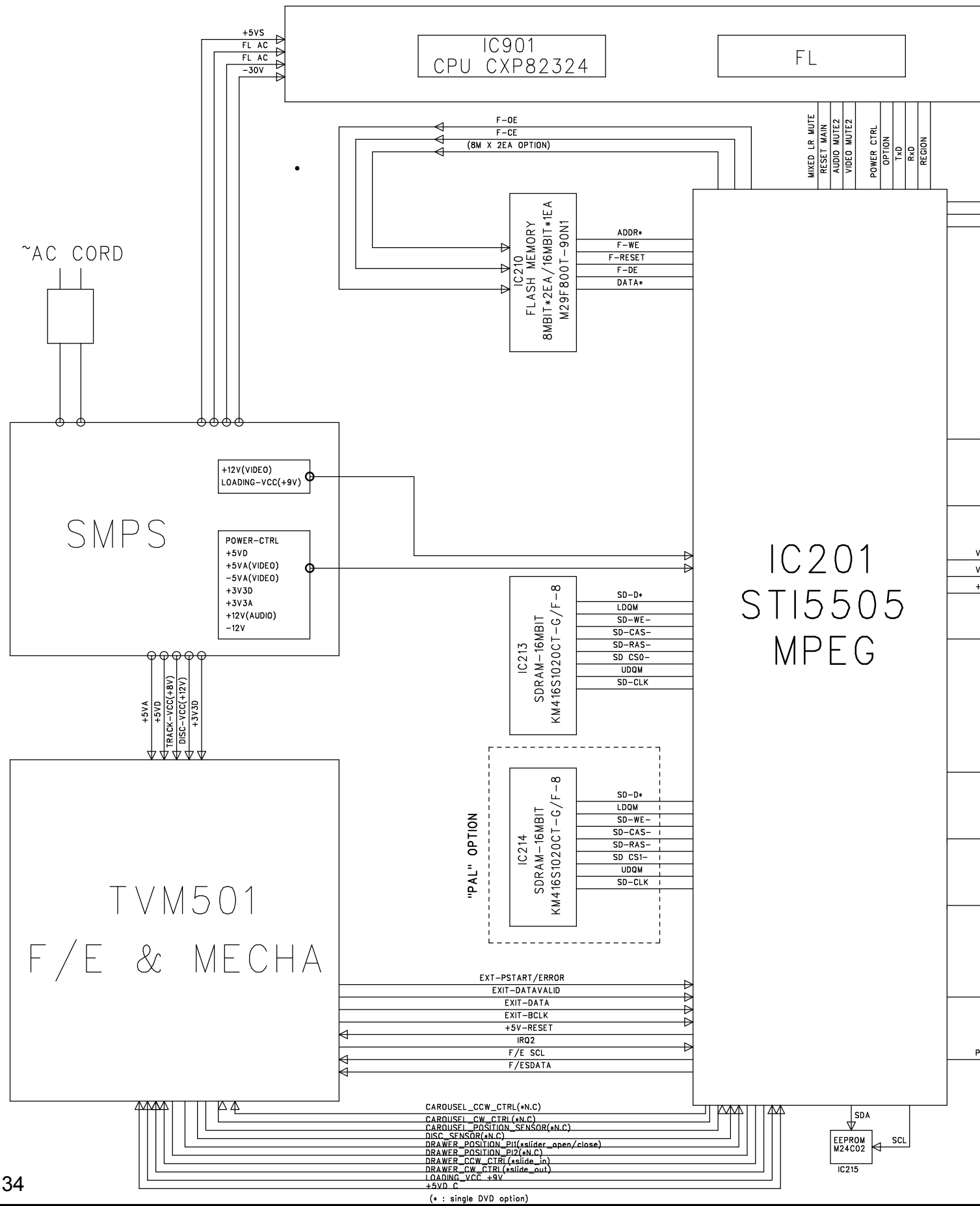

LEFT CHANNEL
(SAME AS RIGHT CANNEL)

AUDIO MUTE2
VIDEO MUTE2
POWER CTRL
OPTION
TxD
RxD
REGION

A-MUTE
A-MUTE2
H/P-MUTE

CVBS-OUT
Y-OUT
C-OUT
B.N.F
IC406-A TSH95
IC406-B TSH95
IC407-A TSH95
IC407-B TSH95
C-VIDEO
S-VIDEO

VIDEO-MUTE
VIDEO-MUTE2
+5V ST/BY

R-OUT
G-OUT
B-OUT
Band Notch Filter
+5V
-5V
IC805-A TSH95
IC805-B TSH95
Y
Pr
Pb

IC807 TC7WU04F
BUFFER
SPDIF
T/M TRANS801
COAXIAL

PIXCLK-27MHZ
IC204 74HCU04
SDA
SCL
EEPROM M24C02
IC215

FILENAME	CODE NO.			SHEET
BLOCK	BLOCK			1/1
MODEL	DESIGN	CHKD	CHKD	APPROVAL
DVD600				
DESIGN DATE 2000.12.15				

DVD600 Electrical Parts List

Ref. Designator Part Number Description Qty

MAIN PCB

'090	J60600008000	SHIELD MPEG FRONT	1.000
CC203	J4111212000X	CABLE 21P 200	1.000
CC207	J4112122001X	CABLE 12P 200 1.25	1.000
CN200	J4350009914X	CNT 17P SHELD 650 2.0#24	1.000
CP206	J4420031240X	CNT PLUG12P 2.0MM	1.000
CP212	J4420030240X	CON WAFER 2P 2.0	1.000
CP213	J4420030440X	CNT PLUG 4P 2.0MM	1.000
CP214	J4420031140X	CNT ST 11P 2.0	1.000
FC101	J2632400016X	FERRITE CORE 12 BOAM	1.000
FC103	J2632400026X	FERRITE CORE 14 BOAM	1.000
FC104	J2632400026X	FERRITE CORE 14 BOAM	1.000
FC105	J2632100016X	EMI CORE RING34 34*21*12	1.000
LM201	J2612222023X	COIL RA 22UH K	1.000
L206	J2612222923X	2.2UH KS0606-2R2K	1.000
X201	J3914010036X	CRYSTAL 27M 16.5PF	1.000
CM207	J3470010106X	CE 100UF 16V	1.000
CM208	J3515100270X	CC CHIP 10PF 50V D	1.000
CM209	J3515100270X	CC CHIP 10PF 50V D	1.000
CM210	J3515100270X	CC CHIP 10PF 50V D	1.000
CM211	J3515100270X	CC CHIP 10PF 50V D	1.000
CM212	J3515100270X	CC CHIP 10PF 50V D	1.000
CM213	J3515100270X	CC CHIP 10PF 50V D	1.000
CM214	J3515100270X	CC CHIP 10PF 50V D	1.000
CM215	J3515100270X	CC CHIP 10PF 50V D	1.000
CN203	J4422402123X	FPC ST 1.0 21P	1.000
CN208	J4422501327X	FPC ANG 1.0 13P	1.000
CP202	J4422401523X	FPC ST 1.0 15P	1.000
CP207	J4422411220X	FPC ST 1.25 12P	1.000
CP802	J4425031040X	CNT SMD 10P 2.0	1.000
C206	J3515100270X	CC CHIP 10PF 50V D	1.000
C211	J3525104540X	CC/CHIP 0.1U 25V Z	1.000
C213	J3525104540X	CC/CHIP 0.1U 25V Z	1.000
C214	J3525104540X	CC/CHIP 0.1U 25V Z	1.000
C215	J3525104540X	CC/CHIP 0.1U 25V Z	1.000
C216	J3470010106X	CE 100UF 16V	1.000
C217	J3525103170X	CC/CHIP .01U 50V K	1.000
C218	J3515331170X	CC/CHIP 330PF 50V J	1.000
C219	J3525332170X	CC/CHIP 3300PF 50V	1.000
C220	J3525103170X	CC/CHIP .01U 50V K	1.000
C221	J3470010106X	CE 100UF 16V	1.000
C222	J3470010106X	CE 100UF 16V	1.000
C223	J3525103170X	CC/CHIP .01U 50V K	1.000
C226	J3525104540X	CC/CHIP 0.1U 25V Z	1.000
C227	J3525104540X	CC/CHIP 0.1U 25V Z	1.000
C228	J3525104540X	CC/CHIP 0.1U 25V Z	1.000
C229	J3525104540X	CC/CHIP 0.1U 25V Z	1.000
C230	J3525104540X	CC/CHIP 0.1U 25V Z	1.000
C239	J3515220270X	CC/CHIP 22P 50V	1.000
C240	J3515220270X	CC/CHIP 22P 50V	1.000
C241	J3525104540X	CC/CHIP 0.1U 25V Z	1.000
C242	J3525104540X	CC/CHIP 0.1U 25V Z	1.000

Ref. Designator	Part Number	Description	Qty
C243	J3525104540X	CC/CHIP 0.1U 25V Z	1.000
C244	J3525104540X	CC/CHIP 0.1U 25V Z	1.000
C245	J3525104540X	CC/CHIP 0.1U 25V Z	1.000
C246	J3525104540X	CC/CHIP 0.1U 25V Z	1.000
C247	J3525104540X	CC/CHIP 0.1U 25V Z	1.000
C248	J3525104540X	CC/CHIP 0.1U 25V Z	1.000
C249	J3525104540X	CC/CHIP 0.1U 25V Z	1.000
C250	J3525104540X	CC/CHIP 0.1U 25V Z	1.000
C251	J3525103170X	CC/CHIP .01U 50V K	1.000
C252	J3470010106X	CE 100UF 16V	1.000
C253	J3525103170X	CC/CHIP .01U 50V K	1.000
C254	J3470010106X	CE 100UF 16V	1.000
C255	J3525103170X	CC/CHIP .01U 50V K	1.000
C256	J3470010106X	CE 100UF 16V	1.000
C257	J3525103170X	CC/CHIP .01U 50V K	1.000
C258	J3470010036X	CE 10U 16V M 3*5.2	1.000
C259	J3525103170X	CC/CHIP .01U 50V K	1.000
C260	J3470010106X	CE 100UF 16V	1.000
C261	J3525103170X	CC/CHIP .01U 50V K	1.000
C262	J3470022036X	CE 22U 16V M 5*5.2	1.000
C263	J3470022036X	CE 22U 16V M 5*5.2	1.000
C265	J3515100270X	CC CHIP 10PF 50V D	1.000
C266	J3515100270X	CC CHIP 10PF 50V D	1.000
C267	J3515100270X	CC CHIP 10PF 50V D	1.000
C268	J3515100270X	CC CHIP 10PF 50V D	1.000
C270	J3515200270X	CC/CHIP 20P 50V	1.000
C301	J3515100270X	CC CHIP 10PF 50V D	1.000
C312	J3515471170X	C-CHIP 2012SL 470P	1.000
C332	J3525104540X	CC/CHIP 0.1U 25V Z	1.000
C333	J3525104540X	CC/CHIP 0.1U 25V Z	1.000
C334	J3525104540X	CC/CHIP 0.1U 25V Z	1.000
C335	J3525104540X	CC/CHIP 0.1U 25V Z	1.000
C336	J3470022036X	CE 22U 16V M 5*5.2	1.000
C337	J3525104540X	CC/CHIP 0.1U 25V Z	1.000
C338	J3525104540X	CC/CHIP 0.1U 25V Z	1.000
C348	J3470010036X	CE 10U 16V M 3*5.2	1.000
C349	J3525104540X	CC/CHIP 0.1U 25V Z	1.000
C350	J3525104540X	CC/CHIP 0.1U 25V Z	1.000
C351	J3470022036X	CE 22U 16V M 5*5.2	1.000
C353	J3525104540X	CC/CHIP 0.1U 25V Z	1.000
C354	J3525104540X	CC/CHIP 0.1U 25V Z	1.000
C360	J3525104540X	CC/CHIP 0.1U 25V Z	1.000
C361	J3525104540X	CC/CHIP 0.1U 25V Z	1.000
C362	J3525104540X	CC/CHIP 0.1U 25V Z	1.000
C363	J3525104540X	CC/CHIP 0.1U 25V Z	1.000
C364	J3525104540X	CC/CHIP 0.1U 25V Z	1.000
C365	J3515330270X	CC/CHIP 33P 50V J	1.000
C366	J3515330270X	CC/CHIP 33P 50V J	1.000
C367	J3515330270X	CC/CHIP 33P 50V J	1.000
C368	J3515330270X	CC/CHIP 33P 50V J	1.000
C369	J3515330270X	CC/CHIP 33P 50V J	1.000
C401	J3525104540X	CC/CHIP 0.1U 25V Z	1.000
C402	J3470022116X	CE 220U 6.3V M 6.3*5.7	1.000
C403	J3525104540X	CC/CHIP 0.1U 25V Z	1.000
C404	J3470022116X	CE 220U 6.3V M 6.3*5.7	1.000

Ref. Designator	Part Number	Description	Qty
C405	J3525104540X	CC/CHIP 0.1U 25V Z	1.000
C406	J3470022116X	CE 220U 6.3V M 6.3*5.7	1.000
C408	J3470022116X	CE 220U 6.3V M 6.3*5.7	1.000
C409	J3525104540X	CC/CHIP 0.1U 25V Z	1.000
C410	J3515200270X	CC/CHIP 20P 50V	1.000
C411	J3515680270X	CC/CHIP 68P 2012	1.000
C412	J3515200270X	CC/CHIP 20P 50V	1.000
C413	J3525104540X	CC/CHIP 0.1U 25V Z	1.000
C414	J3515150270X	CC/CHIP 15P 50V	1.000
C415	J3515200270X	CC/CHIP 20P 50V	1.000
C416	J3515680270X	CC/CHIP 68P 2012	1.000
C417	J3515200270X	CC/CHIP 20P 50V	1.000
C418	J3515150270X	CC/CHIP 15P 50V	1.000
C419	J3515200270X	CC/CHIP 20P 50V	1.000
C420	J3515680270X	CC/CHIP 68P 2012	1.000
C421	J3515200270X	CC/CHIP 20P 50V	1.000
C422	J3515150270X	CC/CHIP 15P 50V	1.000
C423	J3515200270X	CC/CHIP 20P 50V	1.000
C424	J3515680270X	CC/CHIP 68P 2012	1.000
C425	J3515200270X	CC/CHIP 20P 50V	1.000
C427	J3515200270X	CC/CHIP 20P 50V	1.000
C428	J3515680270X	CC/CHIP 68P 2012	1.000
C429	J3515200270X	CC/CHIP 20P 50V	1.000
C431	J3515200270X	CC/CHIP 20P 50V	1.000
C432	J3515680270X	CC/CHIP 68P 2012	1.000
C433	J3515200270X	CC/CHIP 20P 50V	1.000
C440	J3470010106X	CE 100UF 16V	1.000
C441	J3525104540X	CC/CHIP 0.1U 25V Z	1.000
C503	J3515150270X	CC/CHIP 15P 50V	1.000
C507	J3515100270X	CC CHIP 10PF 50V D	1.000
C508	J3515100270X	CC CHIP 10PF 50V D	1.000
C509	J3515100270X	CC CHIP 10PF 50V D	1.000
C510	J3515100270X	CC CHIP 10PF 50V D	1.000
C511	J3515100270X	CC CHIP 10PF 50V D	1.000
C512	J3515100270X	CC CHIP 10PF 50V D	1.000
C513	J3515100270X	CC CHIP 10PF 50V D	1.000
D401	J2244010104X	DIODE CHIP 1SS355	1.000
IC201	J2135307001X	IC STI5505AVB	1.000
IC204	J2116007001X	IC 74HCU04M1R HEX	1.000
IC211	J2131007002X	IC FLASH M29F800T	1.000
IC212	J2131003009X	IC K4E151611C-TC60000 DRAM	1.000
IC213	J2131003010X	IC SDRAM KS161622D-TC80000 50-TSOP2 SAMS	1.000
IC215	J2131007001X	IC M24C02 SOP8	1.000
IC406	J2110007001X	IC TSH95D VIDEO	1.000
J201	J3024000120X	RES 0 OHM 1/10W J	1.000
J202	J3024000120X	RES 0 OHM 1/10W J	1.000
J203	J3024000120X	RES 0 OHM 1/10W J	1.000
J204	J3024102120X	RES CHIP 1K 1/10W	1.000
J205	J3024102120X	RES CHIP 1K 1/10W	1.000
J206	J3024102120X	RES CHIP 1K 1/10W	1.000
J207	J3024102120X	RES CHIP 1K 1/10W	1.000
L202	J2611022011X	COIL CHIP ELJFC220JF 22uH	1.000
L203	J2611022011X	COIL CHIP ELJFC220JF 22uH	1.000
L205	J2631300011X	BEAD 120XOHM	1.000
L207	J2631330085X	BEAD FCM3216V 2K	1.000

Ref. Designator	Part Number	Description	Qty
L208	J2631330085X	BEAD FCM3216V 2K	1.000
L209	J2631330085X	BEAD FCM3216V 2K	1.000
L210	J2631330085X	BEAD FCM3216V 2K	1.000
L211	J2631330085X	BEAD FCM3216V 2K	1.000
L212	J2631330085X	BEAD FCM3216V 2K	1.000
L330	J2611022011X	COIL CHIP ELJFC220JF 22uH	1.000
L332	J2611022011X	COIL CHIP ELJFC220JF 22uH	1.000
L333	J2611022011X	COIL CHIP ELJFC220JF 22uH	1.000
L334	J2631330085X	BEAD FCM3216V 2K	1.000
L335	J2631330085X	BEAD FCM3216V 2K	1.000
L336	J2631330085X	BEAD FCM3216V 2K	1.000
L337	J3927201111X	EMI FILTER STC104B	1.000
L338	J3927201111X	EMI FILTER STC104B	1.000
L339	J2631330085X	BEAD FCM3216V 2K	1.000
L340	J2631330085X	BEAD FCM3216V 2K	1.000
L341	J2631330085X	BEAD FCM3216V 2K	1.000
L342	J2631330085X	BEAD FCM3216V 2K	1.000
L343	J2631330085X	BEAD FCM3216V 2K	1.000
L344	J2631330085X	BEAD FCM3216V 2K	1.000
L400	J2611022011X	COIL CHIP ELJFC220JF 22uH	1.000
L401	J2611022011X	COIL CHIP ELJFC220JF 22uH	1.000
L402	J2611022011X	COIL CHIP ELJFC220JF 22uH	1.000
L403	J2611022011X	COIL CHIP ELJFC220JF 22uH	1.000
L404	J2611082921X	COIL CHIP 8.2UH	1.000
L405	J2611082921X	COIL CHIP 8.2UH	1.000
L406	J2611082921X	COIL CHIP 8.2UH	1.000
L407	J2611082921X	COIL CHIP 8.2UH	1.000
L408	J2611082921X	COIL CHIP 8.2UH	1.000
L409	J2611082921X	COIL CHIP 8.2UH	1.000
L410	J2611082921X	COIL CHIP 8.2UH	1.000
L411	J2611082921X	COIL CHIP 8.2UH	1.000
L412	J2611082921X	COIL CHIP 8.2UH	1.000
L413	J2611082921X	COIL CHIP 8.2UH	1.000
L414	J2611082921X	COIL CHIP 8.2UH	1.000
L415	J2611082921X	COIL CHIP 8.2UH	1.000
L416	J2631300011X	BEAD 120XOHM	1.000
L417	J2631300011X	BEAD 120XOHM	1.000
L418	J2631300011X	BEAD 120XOHM	1.000
L419	J2631300011X	BEAD 120XOHM	1.000
L421	J2611022011X	COIL CHIP ELJFC220JF 22uH	1.000
L422	J2631330085X	BEAD FCM3216V 2K	1.000
L423	J3927201111X	EMI FILTER STC104B	1.000
Q201	J2041020201X	TR KTC3875S SOT23	1.000
Q202	J2041020201X	TR KTC3875S SOT23	1.000
Q204	J2041020201X	TR KTC3875S SOT23	1.000
Q205	J2041020201X	TR KTC3875S SOT23	1.000
Q206	J2041020201X	TR KTC3875S SOT23	1.000
Q207	J2041220102X	TR NPN DTC114YKA	1.000
Q208	J2041220102X	TR NPN DTC114YKA	1.000
RA201	J3029470120X	RES CHIP 47R 2010	1.000
RA202	J3029470120X	RES CHIP 47R 2010	1.000
RA203	J3029470120X	RES CHIP 47R 2010	1.000
RA204	J3029470120X	RES CHIP 47R 2010	1.000
RA205	J3029470120X	RES CHIP 47R 2010	1.000
RA206	J3029470120X	RES CHIP 47R 2010	1.000

Ref. Designator	Part Number	Description	Qty
RA207	J3029470120X	RES CHIP 47R 2010	1.000
RA208	J3029470120X	RES CHIP 47R 2010	1.000
RA209	J3029470120X	RES CHIP 47R 2010	1.000
RA210	J3029470120X	RES CHIP 47R 2010	1.000
RA211	J3029470120X	RES CHIP 47R 2010	1.000
RA212	J3029470120X	RES CHIP 47R 2010	1.000
RA213	J3029470120X	RES CHIP 47R 2010	1.000
RA214	J3029470120X	RES CHIP 47R 2010	1.000
RA215	J3029470120X	RES CHIP 47R 2010	1.000
RA216	J3029470120X	RES CHIP 47R 2010	1.000
RM201	J3024221120X	R-CHIP 220 2012J	1.000
RM202	J3024221120X	R-CHIP 220 2012J	1.000
RM216	J3024103120X	RES CHIP 10K 1/10W	1.000
RM217	J3024103120X	RES CHIP 10K 1/10W	1.000
RM218	J3024473120X	RES CHIP 47K 1/10W	1.000
RM219	J3024473120X	RES CHIP 47K 1/10W	1.000
RM220	J3024473120X	RES CHIP 47K 1/10W	1.000
RM221	J3024473120X	RES CHIP 47K 1/10W	1.000
RM222	J3024103120X	RES CHIP 10K 1/10W	1.000
RM223	J2631320105X	FCM2012H-102T04	1.000
RM224	J2631320105X	FCM2012H-102T04	1.000
RM225	J2631320105X	FCM2012H-102T04	1.000
RM226	J2631320105X	FCM2012H-102T04	1.000
RM227	J2631320105X	FCM2012H-102T04	1.000
RM228	J2631320105X	FCM2012H-102T04	1.000
RM229	J2631320105X	FCM2012H-102T04	1.000
RM230	J2631320105X	FCM2012H-102T04	1.000
RM232	J3024103120X	RES CHIP 10K 1/10W	1.000
RX06	J3024000120X	RES 0 OHM 1/10W J	1.000
RX08	J3024103120X	RES CHIP 10K 1/10W	1.000
R201	J3024182120X	RES CHIP 1K8 1/10W	1.000
R202	J3024182120X	RES CHIP 1K8 1/10W	1.000
R203	J3024103120X	RES CHIP 10K 1/10W	1.000
R205	J3024103120X	RES CHIP 10K 1/10W	1.000
R206	J3024103120X	RES CHIP 10K 1/10W	1.000
R207	J3024103120X	RES CHIP 10K 1/10W	1.000
R208	J3024103120X	RES CHIP 10K 1/10W	1.000
R209	J3024103120X	RES CHIP 10K 1/10W	1.000
R210	J3024472120X	RES CHIP 4K7 1/10W	1.000
R211	J3024472120X	RES CHIP 4K7 1/10W	1.000
R212	J3024103120X	RES CHIP 10K 1/10W	1.000
R213	J3024560120X	RES CHIP 56 1/10WJ	1.000
R214	J3024000120X	RES 0 OHM 1/10W J	1.000
R216	J3024103120X	RES CHIP 10K 1/10W	1.000
R218	J30241873175	RES 18K7 1/10 1%	1.000
R219	J30241153175	RES 11K5 1/10 1%	1.000
R223	J3024000120X	RES 0 OHM 1/10W J	1.000
R224	J2631320095X	BEAD FCM2012V-601 T05 600R	1.000
R228	J3024331120X	R-CHIP 330 2012J	1.000
R229	J3024105120X	RES CHIP 1M 1/10WJ	1.000
R230	J3024103120X	RES CHIP 10K 1/10W	1.000
R231	J3024103120X	RES CHIP 10K 1/10W	1.000
R232	J3024103120X	RES CHIP 10K 1/10W	1.000
R233	J3024103120X	RES CHIP 10K 1/10W	1.000
R234	J2631320065X	FCM2012V-221T07	1.000

Ref. Designator	Part Number	Description	Qty
R235	J3024470120X	RES CHIP 47 1/10W	1.000
R236	J3024470120X	RES CHIP 47 1/10W	1.000
R237	J3024470120X	RES CHIP 47 1/10W	1.000
R238	J2631320065X	FCM2012V-221T07	1.000
R239	J2631320065X	FCM2012V-221T07	1.000
R240	J3024470120X	RES CHIP 47 1/10W	1.000
R243	J2631320245X	BEAD FCM2012C-121T06 120R	1.000
R244	J3024000120X	RES 0 OHM 1/10W J	1.000
R247	J3024000120X	RES 0 OHM 1/10W J	1.000
R249	J3024472120X	RES CHIP 4K7 1/10W	1.000
R250	J3024472120X	RES CHIP 4K7 1/10W	1.000
R269	J3024101120X	RES CHIP 100 1/10W	1.000
R270	J3024101120X	RES CHIP 100 1/10W	1.000
R271	J2631320075X	FCM2012V-301T07	1.000
R272	J2631320075X	FCM2012V-301T07	1.000
R277	J3024103120X	RES CHIP 10K 1/10W	1.000
R278	J3024103120X	RES CHIP 10K 1/10W	1.000
R280	J3024103120X	RES CHIP 10K 1/10W	1.000
R281	J3024103120X	RES CHIP 10K 1/10W	1.000
R283	J3024472120X	RES CHIP 4K7 1/10W	1.000
R286	J3024470120X	RES CHIP 47 1/10W	1.000
R289	J2631320105X	FCM2012H-102T04	1.000
R301	J3024000120X	RES 0 OHM 1/10W J	1.000
R330	J2631330085X	BEAD FCM3216V 2K	1.000
R332	J2631330085X	BEAD FCM3216V 2K	1.000
R333	J2631320125X	FCM2012H-202T02	1.000
R334	J2631320125X	FCM2012H-202T02	1.000
R335	J2631320015X	FCM2012K-202T02	1.000
R345	J3024000120X	RES 0 OHM 1/10W J	1.000
R346	J3024000120X	RES 0 OHM 1/10W J	1.000
R348	J3024473120X	RES CHIP 47K 1/10W	1.000
R349	J2631320065X	FCM2012V-221T07	1.000
R350	J3024470120X	RES CHIP 47 1/10W	1.000
R351	J2631320065X	FCM2012V-221T07	1.000
R352	J3024470120X	RES CHIP 47 1/10W	1.000
R353	J3024470120X	RES CHIP 47 1/10W	1.000
R354	J3024470120X	RES CHIP 47 1/10W	1.000
R355	J3024470120X	RES CHIP 47 1/10W	1.000
R356	J3024470120X	RES CHIP 47 1/10W	1.000
R357	J3024473120X	RES CHIP 47K 1/10W	1.000
R358	J3024473120X	RES CHIP 47K 1/10W	1.000
R359	J3024473120X	RES CHIP 47K 1/10W	1.000
R360	J3024473120X	RES CHIP 47K 1/10W	1.000
R361	J3024473120X	RES CHIP 47K 1/10W	1.000
R362	J3024473120X	RES CHIP 47K 1/10W	1.000
R363	J3024473120X	RES CHIP 47K 1/10W	1.000
R366	J3024472120X	RES CHIP 4K7 1/10W	1.000
R367	J3024472120X	RES CHIP 4K7 1/10W	1.000
R368	J3024472120X	RES CHIP 4K7 1/10W	1.000
R369	J3024472120X	RES CHIP 4K7 1/10W	1.000
R370	J3024472120X	RES CHIP 4K7 1/10W	1.000
R400	J3024479120X	R-CHIP 4R7 2012J	1.000
R401	J3024479120X	R-CHIP 4R7 2012J	1.000
R402	J3024479120X	R-CHIP 4R7 2012J	1.000
R403	J3024479120X	R-CHIP 4R7 2012J	1.000

Ref. Designator	Part Number	Description	Qty
R404	J3024391120X	R-CHIP 390 2012J	1.000
R405	J3024391120X	R-CHIP 390 2012J	1.000
R406	J3024391120X	R-CHIP 390 2012J	1.000
R407	J3024621120X	RES CHIP 620 2012 1/10W	1.000
R408	J3024391120X	R-CHIP 390 2012J	1.000
R409	J3024391120X	R-CHIP 390 2012J	1.000
R410	J3024621120X	RES CHIP 620 2012 1/10W	1.000
R411	J3024391120X	R-CHIP 390 2012J	1.000
R412	J3024391120X	R-CHIP 390 2012J	1.000
R413	J3024391120X	R-CHIP 390 2012J	1.000
R414	J3024471120X	RES CHIP 470 1/10W	1.000
R415	J3024271120X	R-CHIP 270 1/10W J	1.000
R416	J3024391120X	R-CHIP 390 2012J	1.000
R417	J3024391120X	R-CHIP 390 2012J	1.000
R420	J3024391120X	R-CHIP 390 2012J	1.000
R421	J3024391120X	R-CHIP 390 2012J	1.000
R424	J3024391120X	R-CHIP 390 2012J	1.000
R425	J3024391120X	R-CHIP 390 2012J	1.000
R428	J3024479120X	R-CHIP 4R7 2012J	1.000
R429	J3024479120X	R-CHIP 4R7 2012J	1.000
R430	J3024479120X	R-CHIP 4R7 2012J	1.000
R431	J3024479120X	R-CHIP 4R7 2012J	1.000
R473	J3024391120X	R-CHIP 390 2012J	1.000
R474	J3024621120X	RES CHIP 620 1/10W 2012	1.000
R477	J3024391120X	R-CHIP 390 2012J	1.000
R478	J3024391120X	R-CHIP 390 2012J	1.000
R479	J3024391120X	R-CHIP 390 2012J	1.000
R480	J3024104120X	RES CHIP 100K 1/10	1.000
R481	J3024102120X	RES CHIP 1K 1/10W	1.000
R484	J3024470120X	RES CHIP 47 1/10W	1.000
R485	J3024470120X	RES CHIP 47 1/10W	1.000
R486	J3024470120X	RES CHIP 47 1/10W	1.000
R487	J3024470120X	RES CHIP 47 1/10W	1.000
R488	J3024470120X	RES CHIP 47 1/10W	1.000
R489	J3024470120X	RES CHIP 47 1/10W	1.000
R490	J3024470120X	RES CHIP 47 1/10W	1.000
R492	J3024102120X	RES CHIP 1K 1/10W	1.000
R493	J3024104120X	RES CHIP 100K 1/10	1.000

FRONT PCB

#005	JE990089005A	FRBD ASM DVD600	
'020	JE990090005A	FRBD APP DVD600	1.000
'050	J67300009000	SPONGE FL	1.000
'070	J67300010000	SPONGE FL	1.000
'090	20932870XX	AC PRI LABEL QC CHECK CRKD1215 20X13MM	1.000
CC902	J4111131500X	CARD 1.0 13P 150	1.000
CN901	J4350009906X	CNT 5P 240 2.0 #26	1.000
CN902	J4422101327X	FPC PLUG 1.0 13P	1.000
CN903	J4350009905X	CNT 4P 140 2.0 #26	1.000
CN904	J4350009907X	CNT 3P 600 2.0 #26	1.000
CP904	J4420030340X	CNT PLUG 2.0 ST 3P	1.000
C907	2026862030	CE 470U0F +20% 6.3V 85C	1.000
DG901	J44320000005	JACK REMOTEIH 3.5*2	1.000
D907	J2221216000X	DIODE RECT IN4004	1.000

Ref. Designator	Part Number	Description	Qty
EC901	J2632410025X	EMI CORE W5 ZP160R	1.000
FC901	J2632400015X	FERRITE CORE CLAMP	1.000
FL901	J2350220010X	VFD HNV-11SM07	1.000
IC901	J2132314042X	IC CPU CXP82316-534Q QFP80	1.000
IC902	J2112505034X	IC KIA7042P 4V2	1.000
OP901	J2123239002X	IC PHOTOCOUPLER PC-17T1DB	1.000
RM901	J2411320024X	REOTE RPM6938	1.000
X901	J3911030000X	RESON ZTT10MHZ CQ	1.000
#005	JE990089005A	FRBD ASM DVD600	
'020	JE990090005A	FRBD APP DVD600	1.000
'050	J67300009000	SPONGE FL	1.000
'070	J67300010000	SPONGE FL	1.000
'090	20932870XX	AC PRI LABEL QC CHECK CRKD1215 20X13MM	1.000
CC902	J4111131500X	CARD 1.0 13P 150	1.000
CN901	J4350009906X	CNT 5P 240 2.0 #26	1.000
CN902	J4422101327X	FPC PLUG 1.0 13P	1.000
CN903	J4350009905X	CNT 4P 140 2.0 #26	1.000
CN904	J4350009907X	CNT 3P 600 2.0 #26	1.000
CP904	J4420030340X	CNT PLUG 2.0 ST 3P	1.000
C907	2026862030	CE 470U0F +20% 6.3V 85C	1.000
DG901	J44320000005	JACK REMOTEIH 3.5*2	1.000
D907	J2221216000X	DIODE RECT IN4004	1.000
EC901	J2632410025X	EMI CORE W5 ZP160R	1.000
FC901	J2632400015X	FERRITE CORE CLAMP	1.000
FL901	J2350220010X	VFD HNV-11SM07	1.000
IC901	J2132314042X	IC CPU CXP82316-534Q QFP80	1.000
IC902	J2112505034X	IC KIA7042P 4V2	1.000
OP901	J2123239002X	IC PHOTOCOUPLER PC-17T1DB	1.000
RM901	J2411320024X	REOTE RPM6938	1.000
X901	J3911030000X	RESON ZTT10MHZ CQ	1.000
C901	J3470947030X	CE 47U 16V	1.000
C906	J3470910110X	CE 100UF 6.3V	1.000
C909	J3470910970X	CE 1U 50V M SS 5*7	1.000
C915	J3470947030X	CE 47U 16V	1.000
C916	J3471347116X	CE SS470U 6V3 M8*9	1.000
C917	J3470110211X	CE 1000UF 6.3V	1.000
Q914	J2021200501X	TR PNP KRA107M	1.000
SW901	J46500500501	SW TACT SKQNAE	1.000
SW903	J46500500501	SW TACT SKQNAE	1.000
SW905	J46500500501	SW TACT SKQNAE	1.000
SW907	J46500500501	SW TACT SKQNAE	1.000
SW911	J46500500501	SW TACT SKQNAE	1.000
SW913	J46500500501	SW TACT SKQNAE	1.000
SW915	J46500500501	SW TACT SKQNAE	1.000
SW917	J46500500501	SW TACT SKQNAE	1.000
SW919	J46500500501	SW TACT SKQNAE	1.000
SW921	J46500500501	SW TACT SKQNAE	1.000
SW924	J46500500501	SW TACT SKQNAE	1.000
SW927	J46500500501	SW TACT SKQNAE	1.000
SW930	J46500500501	SW TACT SKQNAE	1.000
SW931	J46500500501	SW TACT SKQNAE	1.000
C903	J3525104540X	CC/CHIP 0.1U 25V Z	1.000
C904	J3525104540X	CC/CHIP 0.1U 25V Z	1.000
C905	J3525104540X	CC/CHIP 0.1U 25V Z	1.000
C908	J3525104540X	CC/CHIP 0.1U 25V Z	1.000

Ref. Designator	Part Number	Description	Qty
C911	J3525104540X	CC/CHIP 0.1U 25V Z	1.000
D906	J2242510011X	D SCHOTTKY RB501V-40	1.000
L901	J2611022011X	COIL CHIP ELJFC220JF 22uH	1.000
L902	J2631330085X	BEAD FCM3216V 2K	1.000
L903	J2631330085X	BEAD FCM3216V 2K	1.000
L904	J2631330085X	BEAD FCM3216V 2K	1.000
L905	J3927201111X	EMI FILTER STC104B	1.000
L906	J3927201111X	EMI FILTER STC104B	1.000
L908	J2631330085X	BEAD FCM3216V 2K	1.000
L909	J2631330085X	BEAD FCM3216V 2K	1.000
L912	J2631330085X	BEAD FCM3216V 2K	1.000
L913	J2631330085X	BEAD FCM3216V 2K	1.000
L914	J2631330085X	BEAD FCM3216V 2K	1.000
L915	J2631330085X	BEAD FCM3216V 2K	1.000
Q902	J2041220102X	TR NPN DTC114YKA	1.000
R901	J3024101120X	RES CHIP 100 1/10W	1.000
R902	J3024103120X	RES CHIP 10K 1/10W	1.000
R911	J3024242120X	RES CHIP 2K4 1/10 J	1.000
R912	J3024682120X	RES CHIP 6K8 1/10W	1.000
R913	J3024822120X	R-CHIP 8K2 1/10W J	1.000
R916	J3024184120X	R-CHIP 180K 2012J	1.000
R921	J3024242120X	RES CHIP 2K4 1/10 J	1.000
R922	J3024682120X	RES CHIP 6K8 1/10W	1.000
R923	J3024822120X	R-CHIP 8K2 1/10W J	1.000
R924	J3024333120X	RES CHIP 33K 1/10W	1.000
R926	J3024473120X	RES CHIP 47K 1/10W	1.000
R927	J3024223120X	RES CHIP 22K 1/10W	1.000
R931	J3024242120X	RES CHIP 2K4 1/10 J	1.000
R932	J3024682120X	RES CHIP 6K8 1/10W	1.000
R933	J3024822120X	R-CHIP 8K2 1/10W J	1.000
R934	J3024333120X	RES CHIP 33K 1/10W	1.000
R938	J3024103120X	RES CHIP 10K 1/10W	1.000
R939	J3024103120X	RES CHIP 10K 1/10W	1.000
R940	J3024103120X	RES CHIP 10K 1/10W	1.000
R941	J3024103120X	RES CHIP 10K 1/10W	1.000
R942	J3024103120X	RES CHIP 10K 1/10W	1.000
R943	J3024473120X	RES CHIP 47K 1/10W	1.000
R944	J3024103120X	RES CHIP 10K 1/10W	1.000
R945	J3024000120X	RES 0 OHM 1/10W J	1.000
R949	J3024822120X	R-CHIP 8K2 1/10W J	1.000
R974	J3024332120X	RES CHIP 3K3 1/10W	1.000
R983	J2244010104X	DIODE CHIP 1SS355	1.000
R984	J3024271120X	R-CHIP 270 1/10W J	1.000
R985	J3024103120X	RES CHIP 10K 1/10W	1.000
R986	J3024391120X	R-CHIP 390 2012J	1.000
R987	J3024473120X	RES CHIP 47K 1/10W	1.000

OUTPUT PCB

CN802	J4350009903X	CNT 10P 200 2.0 #26	1.000
CP203	J4422002127X	FPC ST 1.0 21P	1.000
JK803	J44303000200	JACK RCA 3P RBG	1.000
JK804	J44312000100	JACK RCA+S GNDCAP	1.000
JK807	J44301000600	JACK RCA 1P O W/GND GOLD DAER	1.000
TS801	J2831020105X	PULSE TRANS EP-7 250uH	1.000

Ref. Designator	Part Number	Description	Qty
'060	20932870XX	AC PRI LABEL QC CHECK CRKD1217(20 X 13MM	1.000
CN802	J4350009903X	CNT 10P 200 2.0 #26	1.000
CP203	J4422002127X	FPC ST 1.0 21P	1.000
JK803	J44303000200	JACK RCA 3P RBG	1.000
JK804	J44312000100	JACK RCA+S GNDCAP	1.000
JK807	J44301000600	JACK RCA 1P O W/GND GOLD DAER	1.000
TS801	J2831020105X	PULSE TRANS EP-7 250uH	1.000
#004	JE990094004A	OUTBD APP DVD600	
'020	JE990096004A	OUTBD SMT DVD600	1.000
'021	J4031100010A	OUT PCB 247*247	1.000
C827	J3470147031X	CE SG 47U 16V M	1.000
C855	J3470122131X	CE SG 220U 16V M	1.000
C856	J3470122131X	CE SG 220U 16V M	1.000
C826	J3525104540X	CC/CHIP 0.1U 25V Z	1.000
C842	J3525104540X	CC/CHIP 0.1U 25V Z	1.000
C843	J3525104540X	CC/CHIP 0.1U 25V Z	1.000
C844	J3525104540X	CC/CHIP 0.1U 25V Z	1.000
C845	J3525104540X	CC/CHIP 0.1U 25V Z	1.000
C846	J3525104540X	CC/CHIP 0.1U 25V Z	1.000
C850	J3525104540X	CC/CHIP 0.1U 25V Z	1.000
C851	J3525104540X	CC/CHIP 0.1U 25V Z	1.000
C853	J3525104540X	CC/CHIP 0.1U 25V Z	1.000
C857	J3515101270X	CC/CHIP 100P 50V J	1.000
C858	J3515101270X	CC/CHIP 100P 50V J	1.000
C859	J3515101270X	CC/CHIP 100P 50V J	1.000
C861	J3515101270X	CC/CHIP 100P 50V J	1.000
C862	J3515101270X	CC/CHIP 100P 50V J	1.000
C863	J3515150270X	CC/CHIP 15P 50V	1.000
C864	J3515150270X	CC/CHIP 15P 50V	1.000
D801	J2244010104X	DIODE CHIP 1SS355	1.000
D802	J2242451514X	D-CHIP ZNR5V1B0.2W	1.000
D803	J2242451514X	D-CHIP ZNR5V1B0.2W	1.000
D804	J2242468514X	D-ZENER 0.2W 6.8V	1.000
D805	J2242468514X	D-ZENER 0.2W 6.8V	1.000
D807	J2242451514X	D-CHIP ZNR5V1B0.2W	1.000
D808	J2242451514X	D-CHIP ZNR5V1B0.2W	1.000
D809	J2242468514X	D-ZENER 0.2W 6.8V	1.000
D810	J2242468514X	D-ZENER 0.2W 6.8V	1.000
D811	J2242468514X	D-ZENER 0.2W 6.8V	1.000
D812	J2242468514X	D-ZENER 0.2W 6.8V	1.000
D813	J2242468514X	D-ZENER 0.2W 6.8V	1.000
D814	J2242468514X	D-ZENER 0.2W 6.8V	1.000
IC805	J2110007001X	IC TSH95D VIDEO	1.000
IC807	J2115206008X	IC TC7WU04FU	1.000
J801	J3024000120X	RES 0 OHM 1/10W J	1.000
J802	J3024000120X	RES 0 OHM 1/10W J	1.000
J803	J3024000120X	RES 0 OHM 1/10W J	1.000
J804	J3024000120X	RES 0 OHM 1/10W J	1.000
J808	J3024000120X	RES 0 OHM 1/10W J	1.000
J809	J3024000120X	RES 0 OHM 1/10W J	1.000
J813	J3024000120X	RES 0 OHM 1/10W J	1.000
J814	J3024000120X	RES 0 OHM 1/10W J	1.000
J818	J3024000120X	RES 0 OHM 1/10W J	1.000
J819	J3024000120X	RES 0 OHM 1/10W J	1.000
J836	J3024000120X	RES 0 OHM 1/10W J	1.000

Ref. Designator	Part Number	Description	Qty
J837	J3024000120X	RES 0 OHM 1/10W J	1.000
L801	J2631300011X	BEAD 120XOHM	1.000
L802	J2631300011X	BEAD 120XOHM	1.000
L803	J2631300011X	BEAD 120XOHM	1.000
L804	J2631300011X	BEAD 120XOHM	1.000
L805	J2631300011X	BEAD 120XOHM	1.000
L806	J2631300011X	BEAD 120XOHM	1.000
L807	J2611022011X	COIL CHIP ELJFC220JF 22uH	1.000
L808	J2611022011X	COIL CHIP ELJFC220JF 22uH	1.000
L809	J2631300011X	BEAD 120XOHM	1.000
L810	J3024000120X	RES 0 OHM 1/10W J	1.000
L811	J3024000120X	RES 0 OHM 1/10W J	1.000
L816	J2611022011X	COIL CHIP ELJFC220JF 22uH	1.000
L818	J3024000120X	RES 0 OHM 1/10W J	1.000
L830	J3024000120X	RES 0 OHM 1/10W J	1.000
L831	J3024000120X	RES 0 OHM 1/10W J	1.000
Q806	J2041220102X	TR NPN DTC114YKA	1.000
Q807	J2041220102X	TR NPN DTC114YKA	1.000
Q810L	J2041220302X	TR DTC323TK SMT3	1.000
Q810R	J2041220302X	TR DTC323TK SMT3	1.000
R815	J3024221120X	R-CHIP 220 2012J	1.000
R830	J3024390120X	RES 39R 1/10 J	1.000
R831	J3024470120X	RES CHIP 47 1/10W	1.000
R832	J3024390120X	RES 39R 1/10 J	1.000
R833	J3024390120X	RES 39R 1/10 J	1.000
R836	J3024100120X	R-CHIP 10 2012J	1.000
R837	J3024100120X	R-CHIP 10 2012J	1.000
R838	J30245621175	RES 562R 1/10 1% F	1.000
R839	J30246651175	RES 665R 1/10 1% F	1.000
R840	J30243921175	RES 392R 1/10 1% F	1.000
R841	J3024342175X	RES 3K4 1/10 1% F	1.000
R842	J30245621175	RES 562R 1/10 1% F	1.000
R843	J30241652175	RES CHIP 1K65 1% F	1.000
R844	J30248451175	RES 845R 1/10 1% F	1.000
R845	J30243921175	RES 392R 1/10 1% F	1.000
R846	J30243921175	RES 392R 1/10 1% F	1.000
R847	J30243921175	RES 392R 1/10 1% F	1.000
R848	J3024390120X	RES 39R 1/10 J	1.000
R849	J3024390120X	RES 39R 1/10 J	1.000
R850	J3024390120X	RES 39R 1/10 J	1.000
R851	J3024390120X	RES 39R 1/10 J	1.000
R852	J3024390120X	RES 39R 1/10 J	1.000
R853	J3024390120X	RES 39R 1/10 J	1.000
R856	J3024101120X	RES CHIP 100 1/10W	1.000
R858	J3024100120X	R-CHIP 10 2012J	1.000
R860	J3024221120X	R-CHIP 220 2012J	1.000
R862	J3024750120X	RES CHIP 75 1/10W	1.000
R865	J3024181120X	RES CHIP 180 1/10W	1.000
R867	J3024390120X	RES 39R 1/10 J	1.000
R868	J3024390120X	RES 39R 1/10 J	1.000
R869	J3024104120X	RES CHIP 100K 1/10	1.000
R870	J3024104120X	RES CHIP 100K 1/10	1.000
R871	J3024470120X	RES CHIP 47 1/10W	1.000
R872	J3024471120X	RES CHIP 470 1/10W	1.000
R873	J3024331120X	R-CHIP 330 2012J	1.000

Ref. Designator	Part Number	Description	Qty
R874	J3024331120X	R-CHIP 330 2012J	1.000
R875	J3024470120X	RES CHIP 47 1/10W	1.000
R876	J3024471120X	RES CHIP 470 1/10W	1.000
R878	J3024331120X	R-CHIP 330 2012J	1.000
R879	J3024331120X	R-CHIP 330 2012J	1.000
R880	J3024102120X	RES CHIP 1K 1/10W	1.000
R881	J3024102120X	RES CHIP 1K 1/10W	1.000

SENSOR PCB (MECH CONTROL PCB)

R001	5088295016	RCF 100R0 OHM +5% 250M10W	1.000
R002	5088295016	RCF 100R0 OHM +5% 250M10W	1.000
C001	80434590AF	CC 22P0F +5% -5% 50.0V NP0	1.000
C002	20246950AF	CC 100N0F +10% -10% 25.0V Y5R	1.000
C003	80434590AF	CC 22P0F +5% -5% 50.0V NP0	1.000
C004	20246950AF	CC 100N0F +10% -10% 25.0V Y5R	1.000
C005	20268030AM	CE 1MI0F +20% 25.0V 85C	1.000
D001	2041428001	D-ZENER 1N5232B 5.6V 500MI0W	1.000
D002	2041428001	D-ZENER 1N5232B 5.6V 500MI0W	1.000
IC001	20656300NR	IC-MOTORCIR LB1641 MOTOR CONT WITH LOGI	1.000
IC002	20656300NR	IC-MOTORCIR LB1641 MOTOR CONT WITH LOGI	1.000
L001	20265120NR	LF 39U0H +10% 130MI0 OHM 1.5A	1.000
PI001	20586840NR	D-PHOTO RPI-574	1.000
PI002	20586840NR	D-PHOTO RPI-574	1.000
PI003	20586840NR	D-PHOTO RPI-574	1.000
PI004	20556130NR	D-PHOTO GP2S28 20MI0A	1.000
P003	20504010XX	CONN 2.0MM 6 MA ST NAT JST,B6B-PH-K 0 0	1.000
P004	20713210XX	WCL 150-05-05 UL2468 RIBBON 26 150MM NON	1.000
P027	20713500NR	WCASSY 06187F 06 180MM UL20080 RIBBON SO	1.000
P406	J4350009909X	CNT 12P 280 #26 2	1.000
P406B	20649240XX	WCL 060-05-05 UL2468 RIBBON 26 60MM NONE	1.000
R003	2054943001	RCFF 2R2 OHM +5% 250MI0W	1.000
R004	2054943001	RCFF 2R2 OHM +5% 250MI0W	1.000

POWER SUPPLY

DVD600 Power Supply module, JBL part**# 55174740** is supplied only as a complete unit.

DVD600 LASER PICK-UP ASSEMBLY, COMPLETE SEE SERVICE BULLETIN JBL2003-01

PACKING/ACCESSORIES

J96000038210	BOX CARTON DVD600		1.000
J97200037000	CUSHION FRONT		1.000
J97200013010	CUSHION REAR		1.000
J94330001000	CORD RCA 3P1500 JW-8103M		1.000
J94310004000	MONO PLUG 1P JW-810		1.000
J94310007000	CORD RCA 1P 01000		1.000
J94310009000	CORD RCA 1P Y 1000		1.000

AI5115 CINEMA PROPACK 600 OWNER'S MANUAL

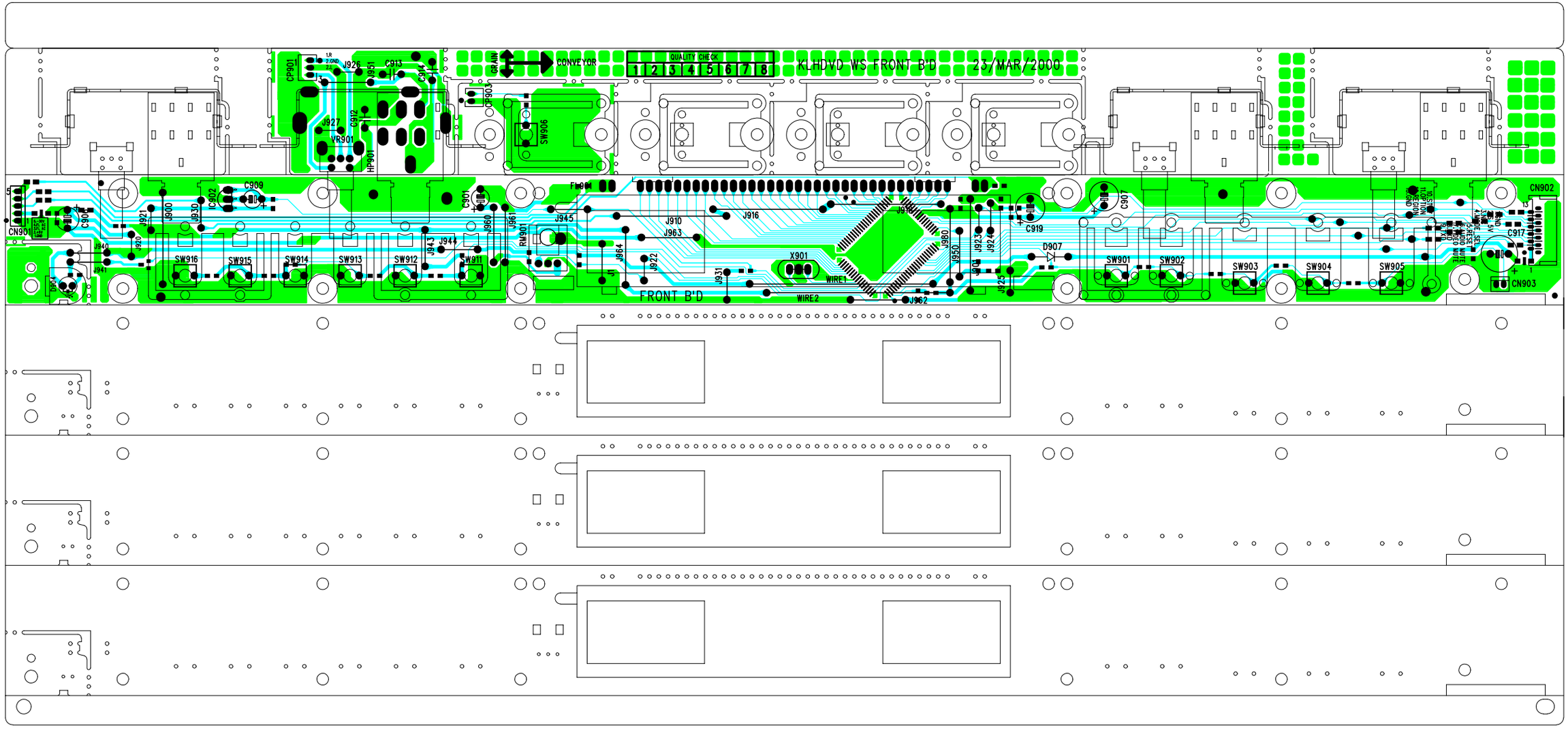
KLHDVD WS FRONT B'D
23/MAR/2000
QUALITY CHECK
1 2 3 4 5 6 7 8
CONVEYOR
GRAIN
FRONT B'D
CN901
CN902
CN903
SW901
SW902
SW903
SW904
SW905
SW906
SW911
SW912
SW913
SW914
SW915
SW916
X901
WIRE1
WIRE2
D907
C919
C917
C909
C901
C907
C913
C914
C912
J926
J927
J951
J945
J910
J963
J916
J922
J931
J962
J925
J924
J923
J950
J980
J961
J960
J943
J944
J941
J940
J921
J900
J930
J920
J964
J1
CP901
CP903
VR901
HP901
RM901
FL001

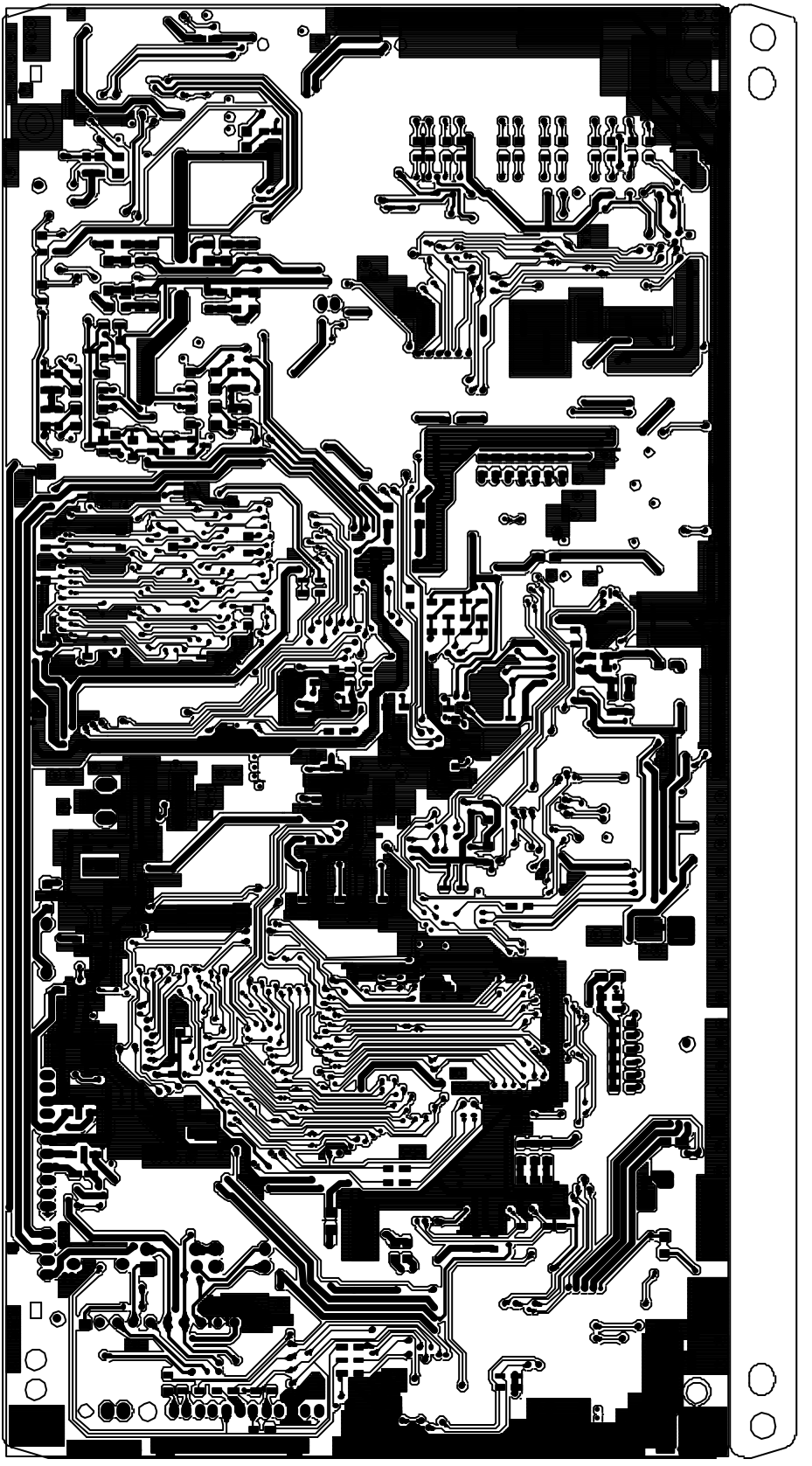

/*DVD5.VC5000_US TOP INSERT DRAWING*/

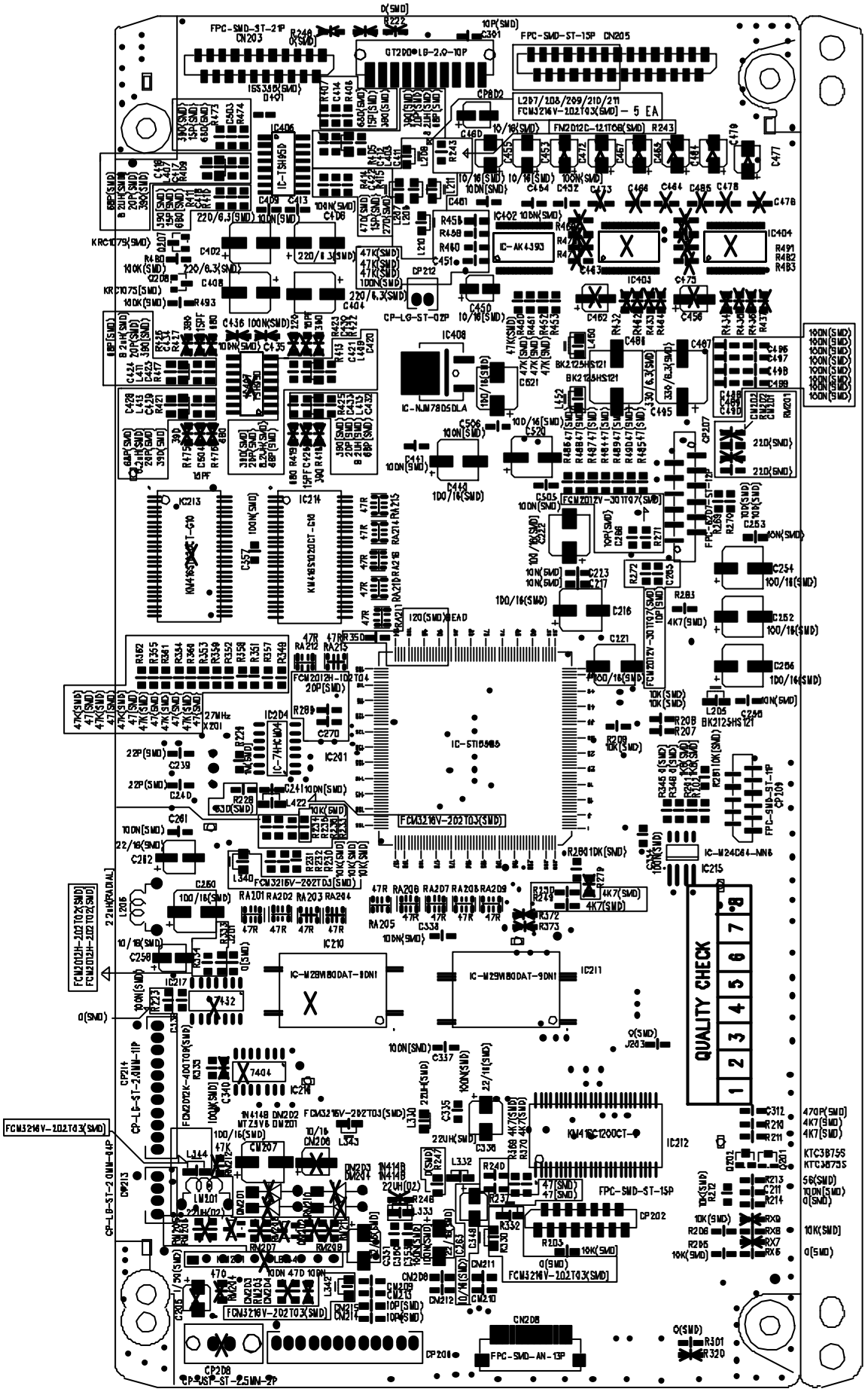

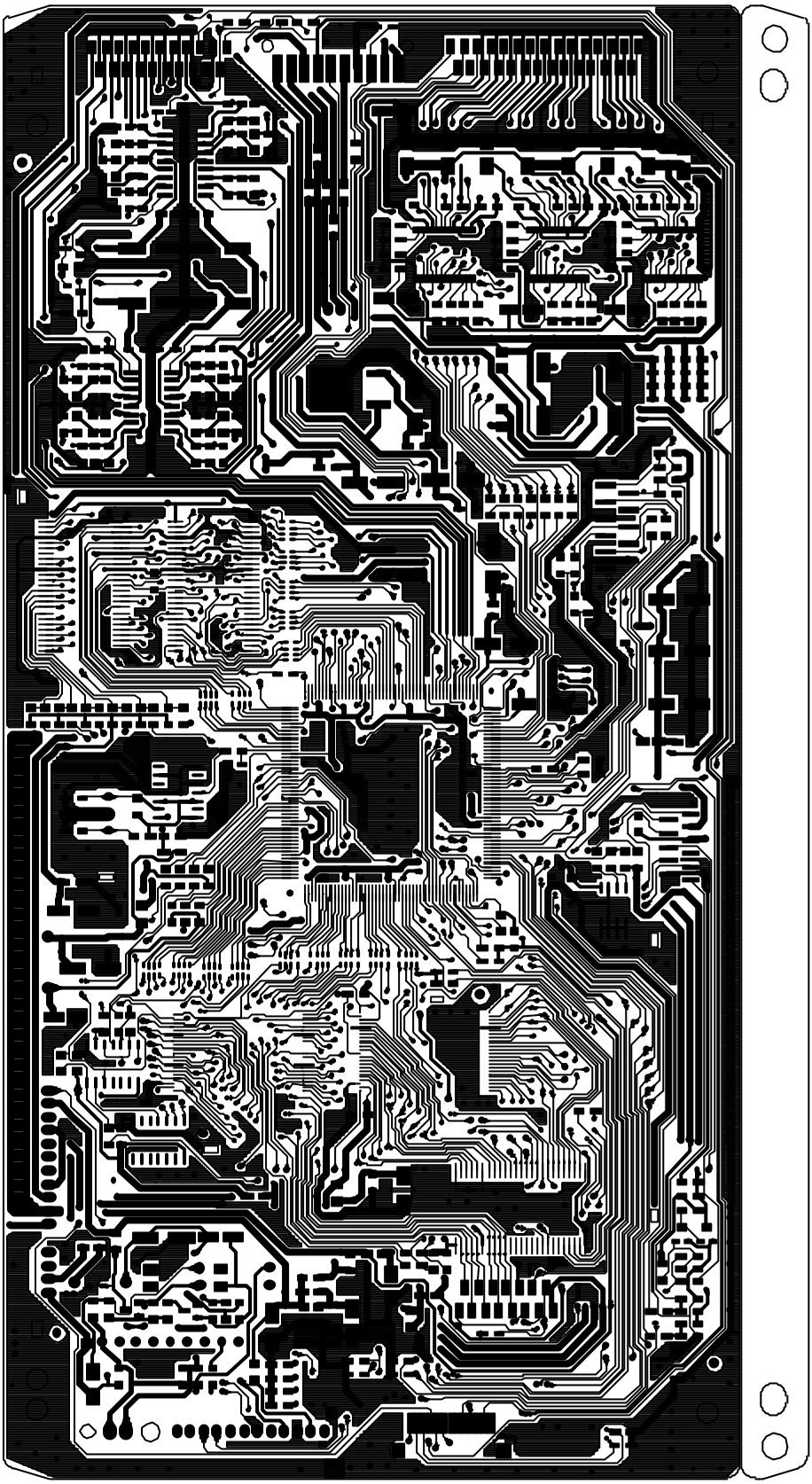

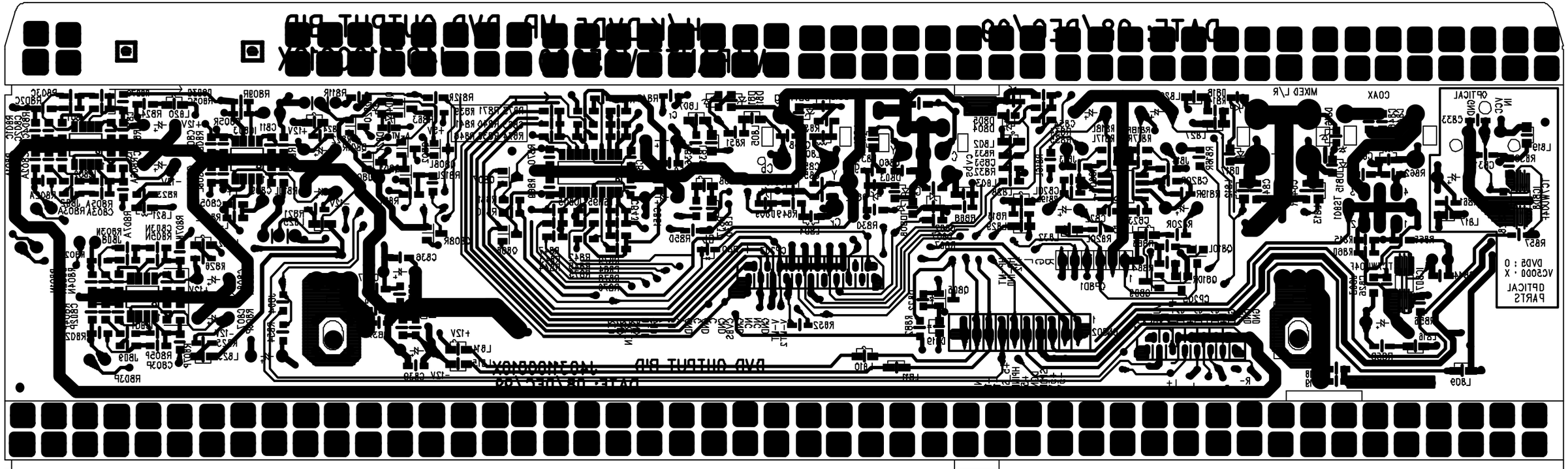

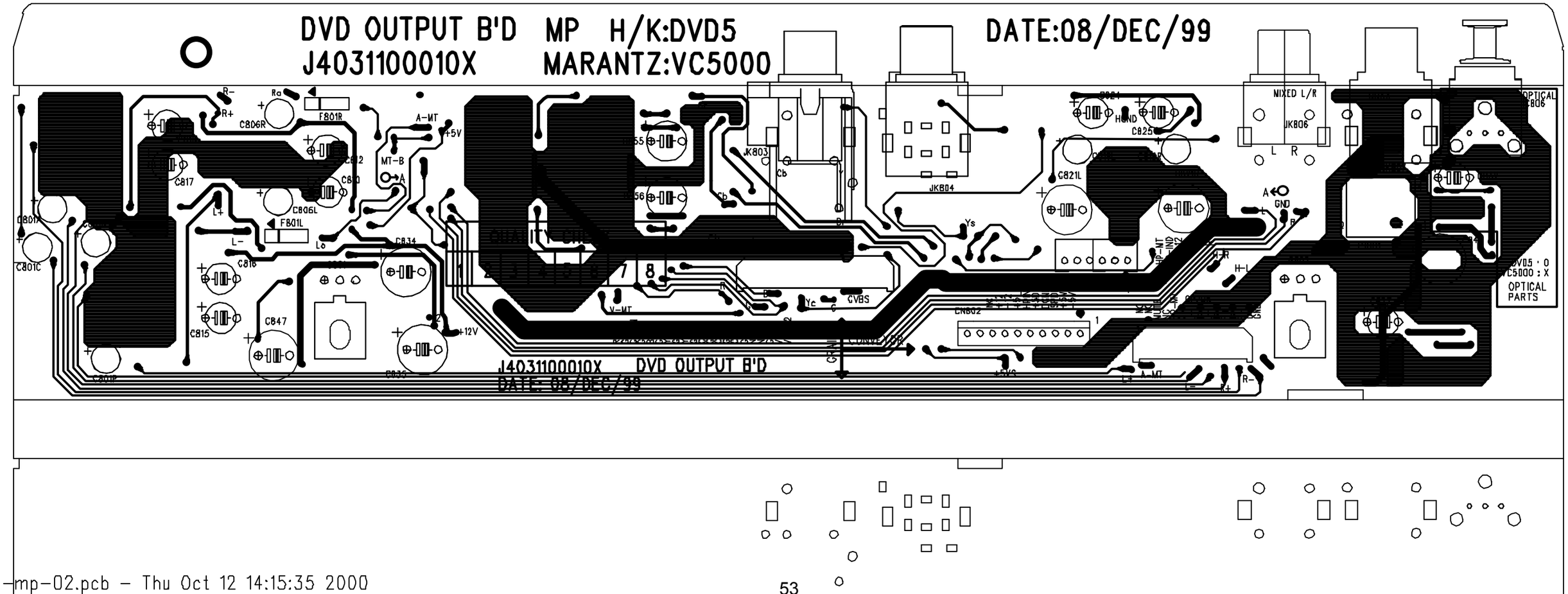

utput-mp-02.pcb - Thu Oct 12 14:15:35 2000

53

REVISION RECORD			
LTR	ECO NO:	APPROVED:	DATE:

DVD600

R830 39(SMD) R831 39(SMD) L801 BEAD(SMD)
D802 UZ5V1(SMD) D803 UZ5V1(SMD)
L802 BEAD(SMD) R833 39(SMD)
C860 100P(SMD) C861 100P(SMD)
R832 39(SMD) C853 100N(SMD)
D804 UZ6V8(SMD) D805 UZ6V8(SMD)
Do not use
R834 5K6(SMD) C854 10N(SMD) R835 5K6(SMD)

JK804-B SVHS_CN
R867 39(SMD) R868 39(SMD) L803 BEAD(SMD) C862 100P(SMD)
D807 UZ5V1(SMD) D808 UZ5V1(SMD)
JK804-A RCA1P-G

CP203 FPC-21P From Main B'd
RED GREEN BLUE Y Y C C C CVBS NC(EU:SDA) NC(EU:SCL) GND NC

R838 562(SMD) R840 392(SMD) R839 665(SMD)
TSH95D IC805-A
47(SMD) R871
TSH95D IC805-B-B-A
R848 39(SMD) R849 39(SMD) BEAD(SMD) L804 Cr
C857 100P(SMD)
JK803 RCA_3V
R841 3400(SMD) R846 392(SMD) JUMPER
R836 10(SMD) L807 22UH1 L831 +5V
C855 220/10 C850 100N(SMD) C842 100N(SMD)
C863 15P(SMD) 330(SMD) R874
R872 470(SMD) 330(SMD) R873
D809 UZ6V8(SMD) D810 UZ6V8(SMD)
Cb
Y
C859 100P(SMD)

R842 562(SMD) R845 392(SMD) R843 1650(SMD)
TSH95D IC805-B
47(SMD) R875
TSH95D IC805-B-B-B
R850 39(SMD) R851 39(SMD) L805 BEAD(SMD) C858 100P(SMD)
C864 15P(SMD) 330(SMD) R879
D811 UZ6V8(SMD) D812 UZ6V8(SMD)
R844 845(SMD) 392(SMD) R847 JUMPER
R837 10(SMD) L808 22UH2 L830 +5V
C856 220/10 C851 100N(SMD) C843 100N(SMD)
R876 470(SMD) 330(SMD) R878
R852 39(SMD) R853 39(SMD) L806 BEAD(SMD)
D813 UZ6V8(SMD) D814 UZ6V8(SMD)

VIDEO_MUTE

From Main B'd CN802
+12(VIDEO) +12V(AUDIO) −12V(AUDIO) +5VST_BY H/P_INDI +5VD GND-D +SPDIF +5V(VIDEO) −5V(VIDEO)

+5VST-BY
R880 1K(SMD) R881 1K(SMD)
TSH95 ST/BY2(#PIN9)
Q806 DTC114YS(SMD) 1SS355(SMD) D801 Q807 DTC114YS(SMD)
R870 100K(SMD)
TSH95ST/BY1(#PIN8)
R869 100K(SMD)

ST/BY1	ST/BY2	
1	0	ST/BY
0	1	ENABLE

TITLE: OUTPUT
VIDEO(DVD600)

DRAWN:	DATED: 15/JAN/2000		
CHECKED:	DATED: 15/JAN/2000		
QUALITY CONTROL:	DATED: 15/JAN/2000		
RELEASED:	DATED: DEC/18/2000		
CODE:	SIZE: A3	DRAWING NO:	REV:
SCALE:		SHEET: 2 OF 2	

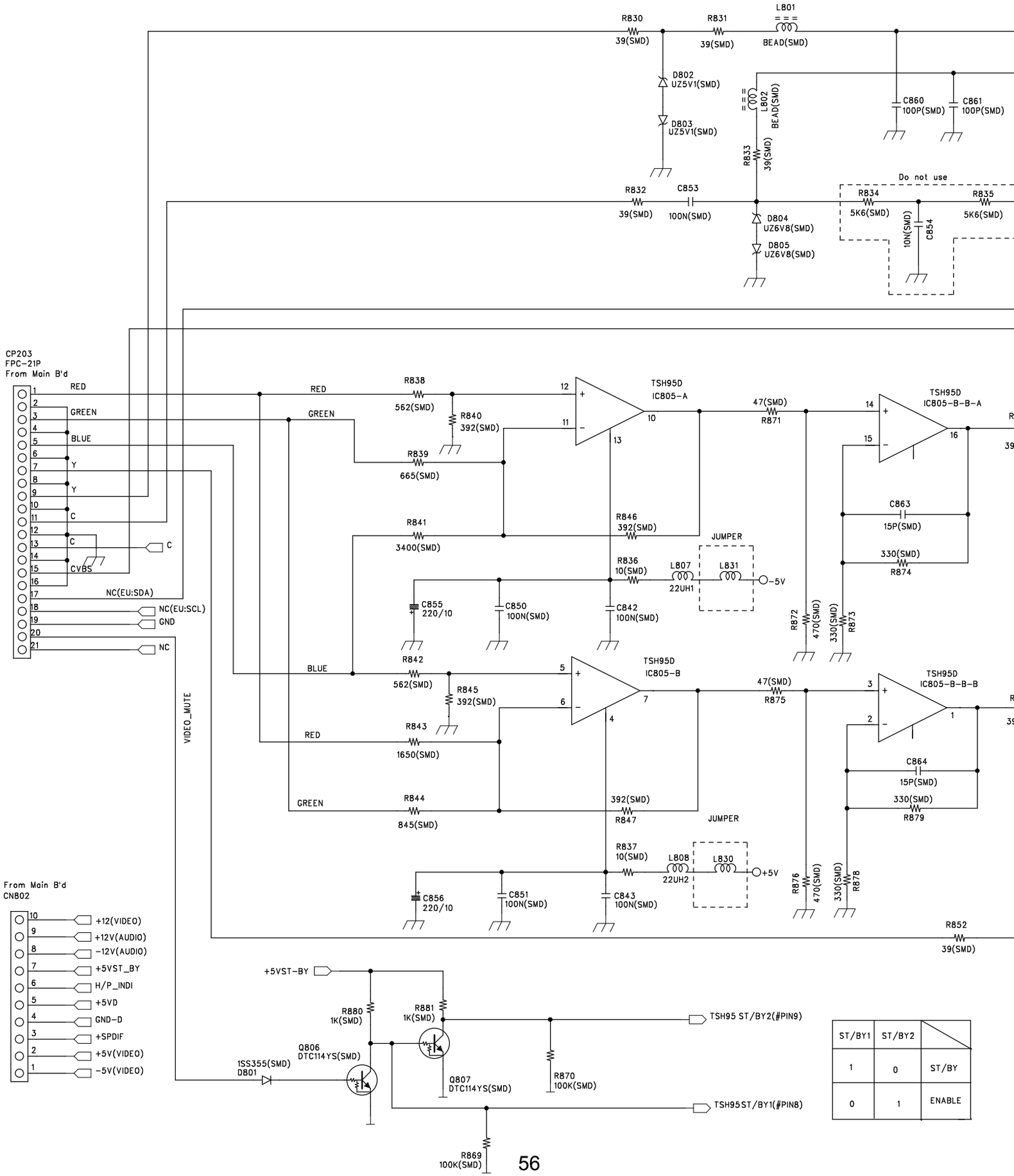
R830
39(SMD)
R831
39(SMD)
L801
BEAD(SMD)
D802
UZ5V1(SMD)
D803
UZ5V1(SMD)
L802
BEAD(SMD)
R833
39(SMD)
C860
100P(SMD)
C861
100P(SMD)
Do not use
R832
39(SMD)
C853
100N(SMD)
D804
UZ6V8(SMD)
D805
UZ6V8(SMD)
R834
5K6(SMD)
R835
5K6(SMD)
10N(SMD)
C854
CP203
FPC-21P
From Main B'd
RED
GREEN
BLUE
Y
Y
C
C
C
CVBS
NC(EU:SDA)
NC(EU:SCL)
GND
NC
R838
562(SMD)
R840
392(SMD)
R839
665(SMD)
TSH95D
IC805-A
47(SMD)
R871
TSH95D
IC805-B-B-A
C863
15P(SMD)
330(SMD)
R874
R841
3400(SMD)
R846
392(SMD)
JUMPER
R836
10(SMD)
L807
22UH1
L831
-5V
C855
220/10
C850
100N(SMD)
C842
100N(SMD)
R872
470(SMD)
330(SMD)
R873
R842
562(SMD)
R845
392(SMD)
R843
1650(SMD)
TSH95D
IC805-B
47(SMD)
R875
TSH95D
IC805-B-B-B
C864
15P(SMD)
330(SMD)
R879
R844
845(SMD)
392(SMD)
R847
JUMPER
R837
10(SMD)
L808
22UH2
L830
+5V
C856
220/10
C851
100N(SMD)
C843
100N(SMD)
R876
470(SMD)
330(SMD)
R878
R852
39(SMD)
VIDEO_MUTE
From Main B'd
CN802
+12(VIDEO)
+12V(AUDIO)
-12V(AUDIO)
+5VST_BY
H/P_INDI
+5VD
GND-D
+SPDIF
+5V(VIDEO)
-5V(VIDEO)
+5VST-BY
R880
1K(SMD)
R881
1K(SMD)
TSH95 ST/BY2(#PIN9)
Q806
DTC114YS(SMD)
1SS355(SMD)
D801
Q807
DTC114YS(SMD)
R870
100K(SMD)
TSH95ST/BY1(#PIN8)
R869
100K(SMD)
ST/BY1
ST/BY2
1
0
ST/BY
0
1
ENABLE

REVISION RECORD			
LTR	ECO NO:	APPROVED:	DATE:

DVD600

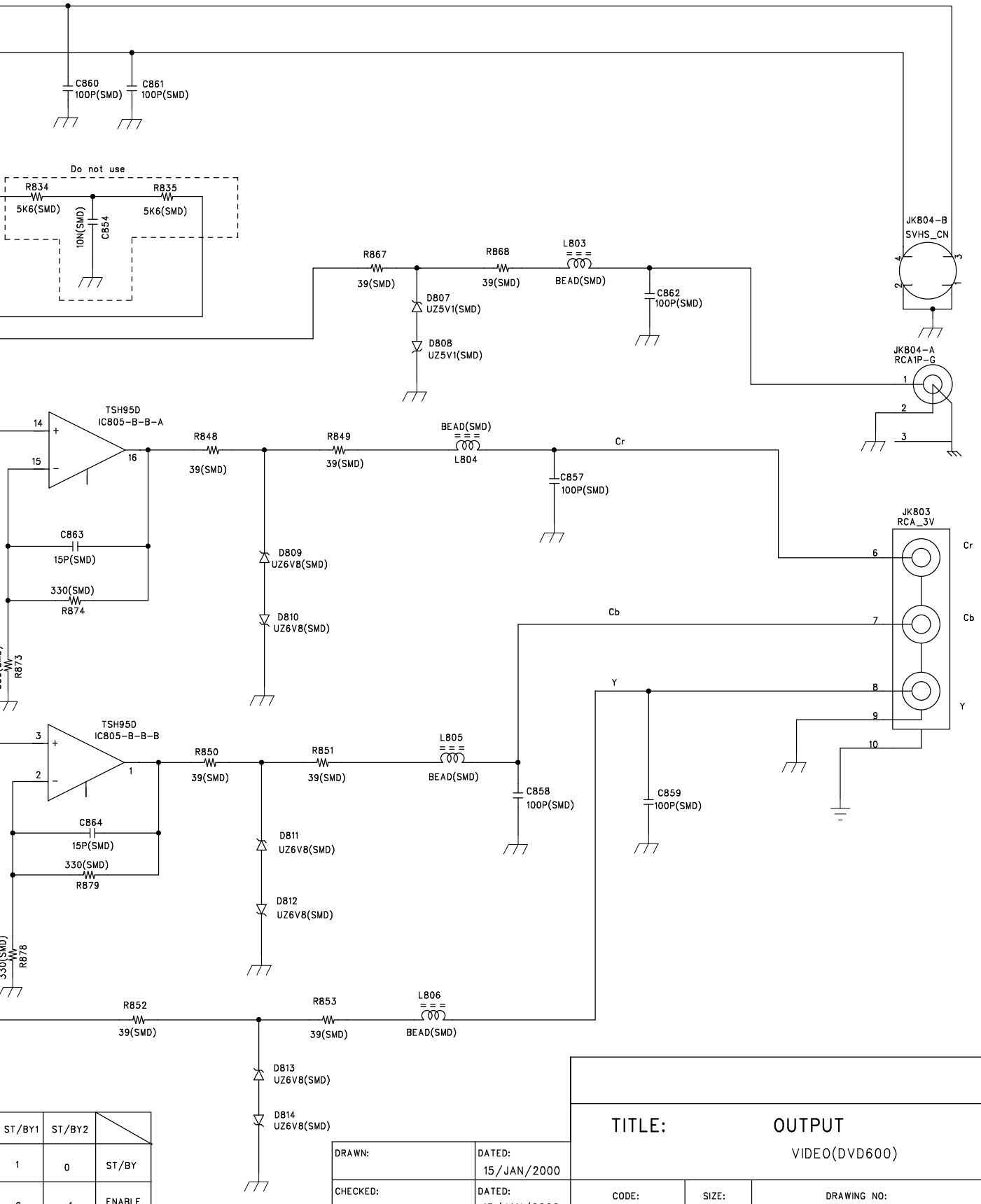

ST/BY1	ST/BY2	
1	0	ST/BY
0	1	ENABLE

DRAWN:	DATED: 15/JAN/2000
CHECKED:	DATED: 15/JAN/2000
QUALITY CONTROL:	DATED: 15/JAN/2000
RELEASED:	DATED: DEC/18/2000

TITLE: OUTPUT
VIDEO(DVD600)

CODE:	SIZE:	DRAWING NO:	REV:
57	A3		

SCALE:

SHEET: 2 OF 2

SCHEMATIC DIAGRAM

NO	DATE	POS.	CONTENTS	NO	DATE	POS.	CONTENTS

DVD600

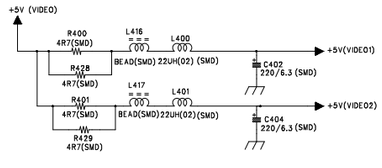

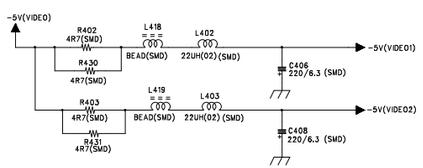

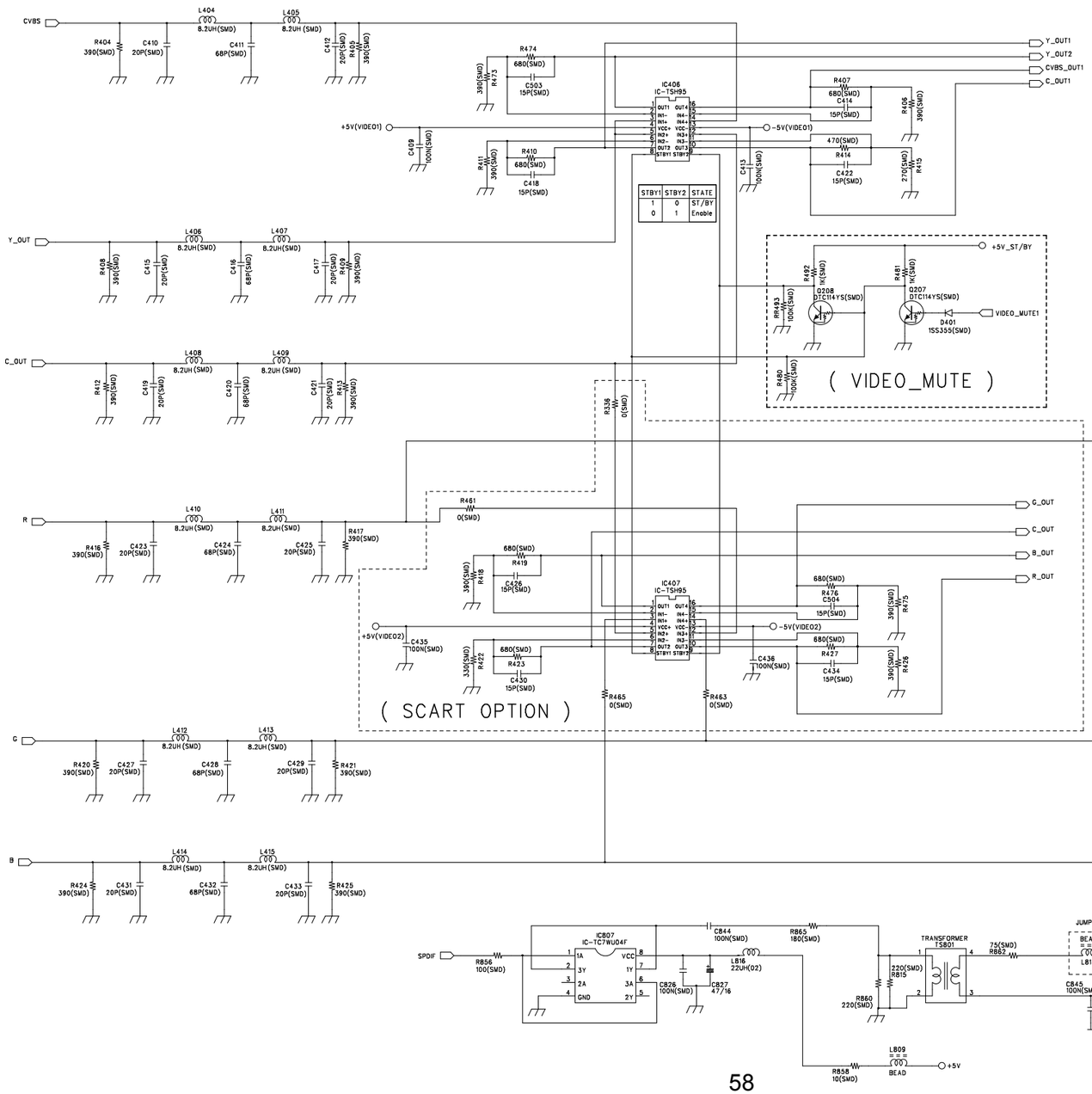

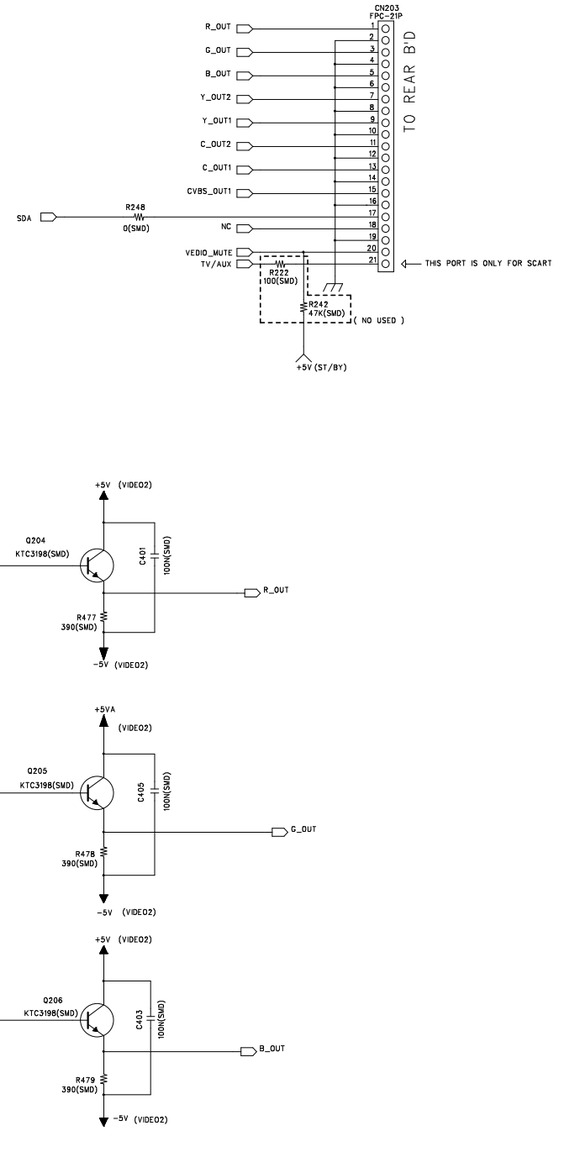

FILENAME	PART NO. MAIN		SHEET
VIDEO_OUTPUT			5/5
MODEL DVD600	DESIGN	CHKD	APPROVAL
DESIGN DATE DEC/15/2000			

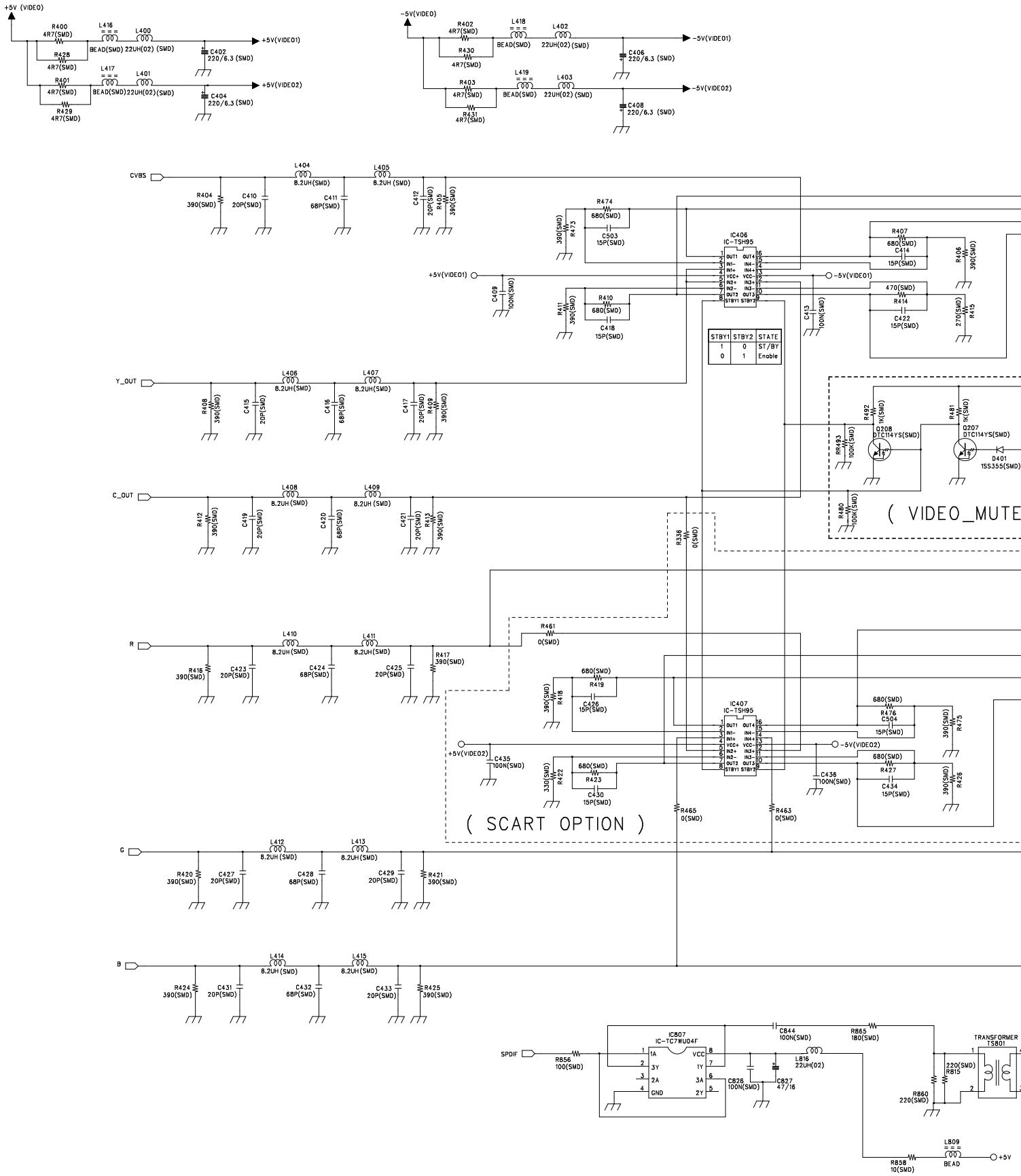
+5V (VIDEO)
R400 4R7(SMD)
L416
L400
BEAD(SMD) 22UH(02) (SMD)
+5V(VIDEO1)
R428 4R7(SMD)
C402 220/6.3 (SMD)
L417
L401
R401 4R7(SMD)
BEAD(SMD) 22UH(02)(SMD)
+5V(VIDEO2)
R429 4R7(SMD)
C404 220/6.3 (SMD)
-5V(VIDEO)
R402 4R7(SMD)
L418
L402
BEAD(SMD)
22UH(02)(SMD)
-5V(VIDEO1)
R430 4R7(SMD)
C406 220/6.3 (SMD)
L419
L403
R403 4R7(SMD)
BEAD(SMD)
22UH(02) (SMD)
-5V(VIDEO2)
R431 4R7(SMD)
C408 220/6.3 (SMD)
CVBS
L404 8.2UH(SMD)
L405 8.2UH (SMD)
R404 390(SMD)
C410 20P(SMD)
C411 68P(SMD)
C412 20P(SMD)
R405 390(SMD)
R474 680(SMD)
C503 15P(SMD)
R473 390(SMD)
IC406 IC-TSH95
OUT1 OUT4 IN1- IN4- IN1+ IN4+ VCC+ VCC- IN2+ IN3+ IN2- IN3- OUT2 OUT3 STBY1 STBY2
+5V(VIDEO1)
C409 100N(SMD)
R411 390(SMD)
R410 680(SMD)
C418 15P(SMD)
-5V(VIDEO1)
R407 680(SMD)
C414 15P(SMD)
R406 390(SMD)
470(SMD)
R414
C422 15P(SMD)
C413 100N(SMD)
270(SMD) R415
STBY1 STBY2 STATE
1 0 ST/BY
0 1 Enable
Y_OUT
L406 8.2UH(SMD)
L407 8.2UH(SMD)
R408 390(SMD)
C415 20P(SMD)
C416 68P(SMD)
C417 20P(SMD)
R409 390(SMD)
R492 1K(SMD)
R481 1K(SMD)
R493 100K(SMD)
Q208 DTC114YS(SMD)
Q207 DTC114YS(SMD)
D401 1SS355(SMD)
R480 100K(SMD)
(VIDEO_MUTE
C_OUT
L408 8.2UH(SMD)
L409 8.2UH (SMD)
R412 390(SMD)
C419 20P(SMD)
C420 68P(SMD)
C421 20P(SMD)
R413 390(SMD)
R336 0(SMD)
R
L410 8.2UH(SMD)
L411 8.2UH(SMD)
R416 390(SMD)
C423 20P(SMD)
C424 68P(SMD)
C425 20P(SMD)
R417 390(SMD)
R461 0(SMD)
680(SMD)
R419
C426 15P(SMD)
R418 390(SMD)
IC407 IC-TSH95
OUT1 OUT4 IN1- IN4- IN1+ IN4+ VCC+ VCC- IN2+ IN3+ IN2- IN3- OUT2 OUT3 STBY1 STBY2
+5V(VIDEO2)
C435 100N(SMD)
680(SMD)
R423
C430 15P(SMD)
R422 330(SMD)
-5V(VIDEO2)
680(SMD)
R476
C504 15P(SMD)
R475 390(SMD)
680(SMD)
R427
C434 15P(SMD)
R426 390(SMD)
C436 100N(SMD)
R465 0(SMD)
R463 0(SMD)
(SCART OPTION)
G
L412 8.2UH (SMD)
L413 8.2UH (SMD)
R420 390(SMD)
C427 20P(SMD)
C428 68P(SMD)
C429 20P(SMD)
R421 390(SMD)
B
L414 8.2UH (SMD)
L415 8.2UH (SMD)
R424 390(SMD)
C431 20P(SMD)
C432 68P(SMD)
C433 20P(SMD)
R425 390(SMD)
SPDIF
R856 100(SMD)
IC807 IC-TC7WU04F
1A VCC 3Y 1Y 2A 3A GND 2Y
C844 100N(SMD)
R865 180(SMD)
L816 22UH(02)
C826 100N(SMD)
C827 47/16
TRANSFORMER TS901
R815 220(SMD)
R860 220(SMD)
R858 10(SMD)
L809 BEAD
+5V

6	5	4	3	2	1

NO	DATE	POS.	CONTENTS	NO	DATE	POS.	CONTENTS

C DIAGRAM

DVD600

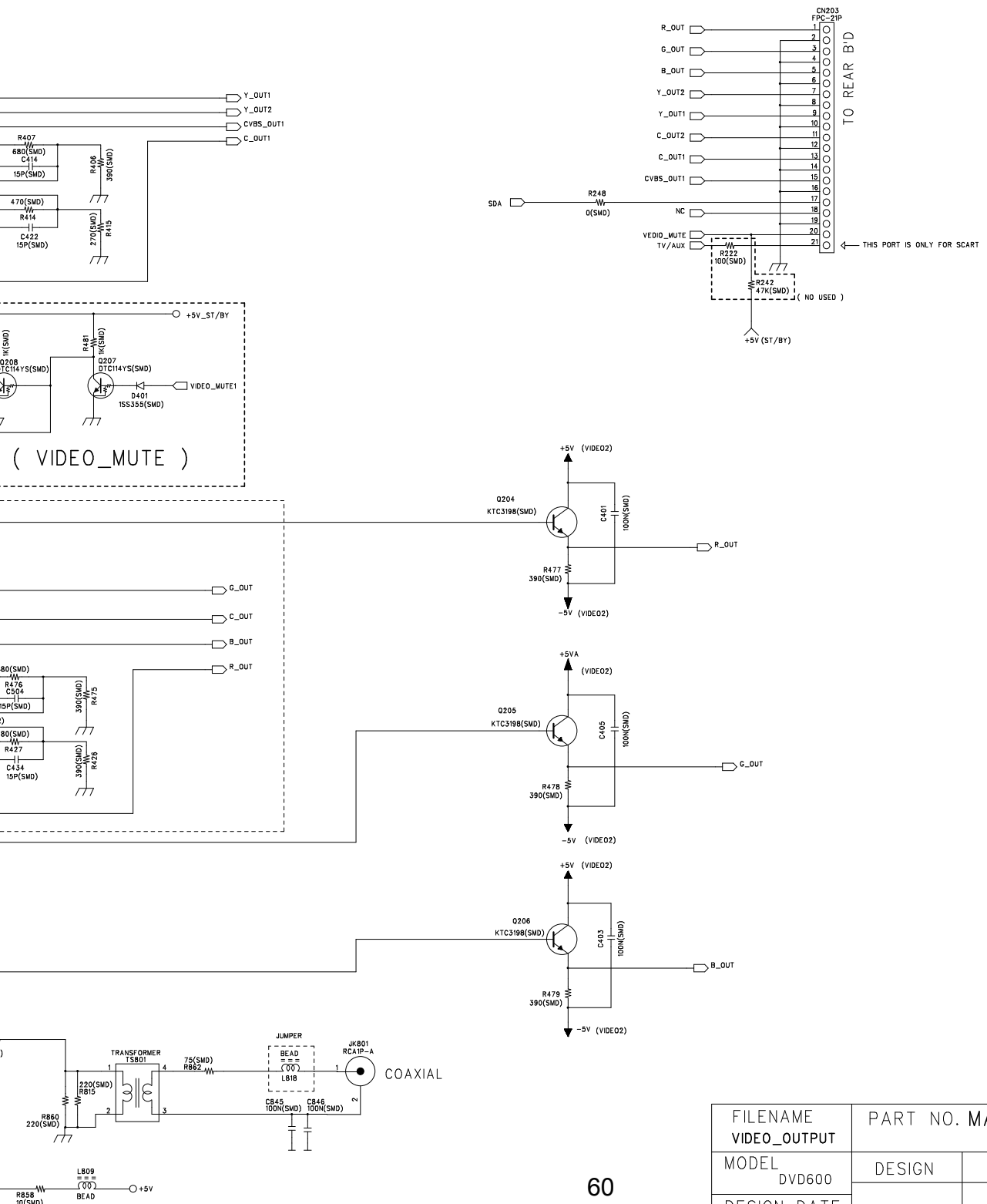

FILENAME VIDEO_OUTPUT	PART NO. MAIN		SHEET 5/5
MODEL DVD600	DESIGN	CHKD	APPROVAL
DESIGN DATE DEC/15/2000			

DVD600

NO	DATE	POS.	CONTENTS	NO	DATE	POS.	CONTENTS

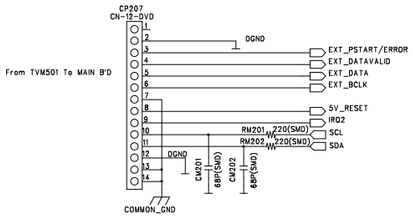

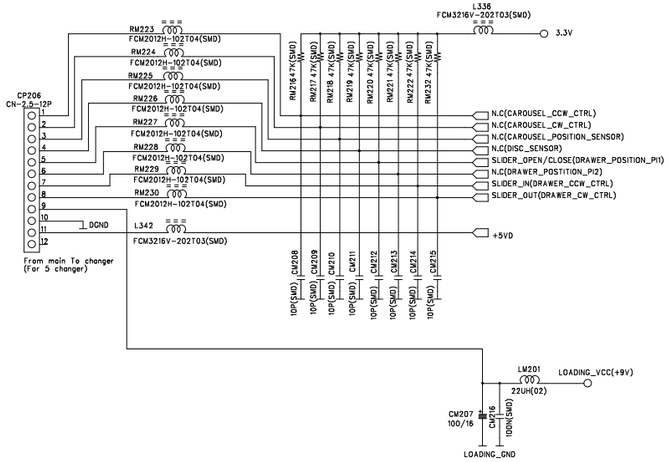

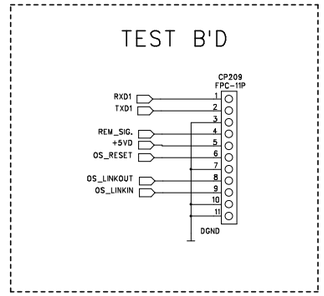

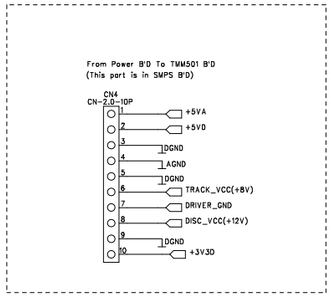

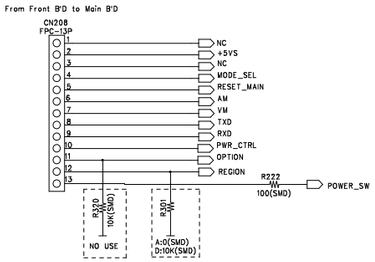

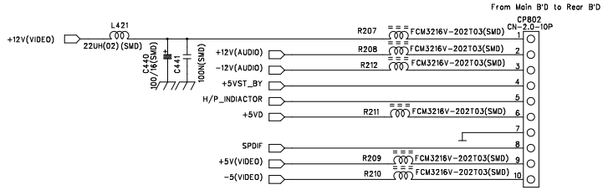

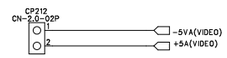

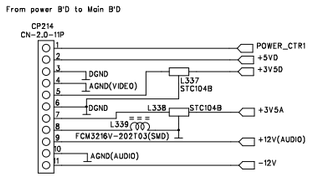

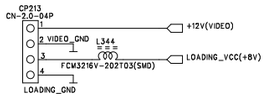

FILENAME	PART NO. MAIN		SHEET
miscs.sch			2/5
MODEL DVD600	DESIGN	CHKD	APPROVAL
DESIGN DATE DEC/15/2000			

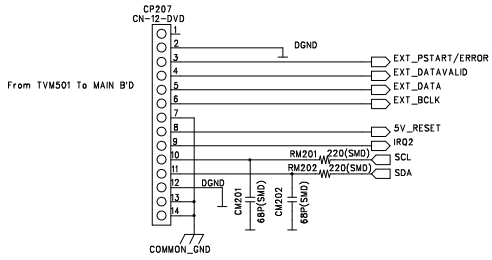
CP207
CN-12-DVD
From TVM501 To MAIN B'D
DGND
EXT_PSTART/ERROR
EXT_DATAVALID
EXT_DATA
EXT_BCLK
5V_RESET
IRQ2
RM201 220(SMD)
SCL
RM202 220(SMD)
SDA
DGND
CM201 68P(SMD)
CM202 68P(SMD)
COMMON_GND

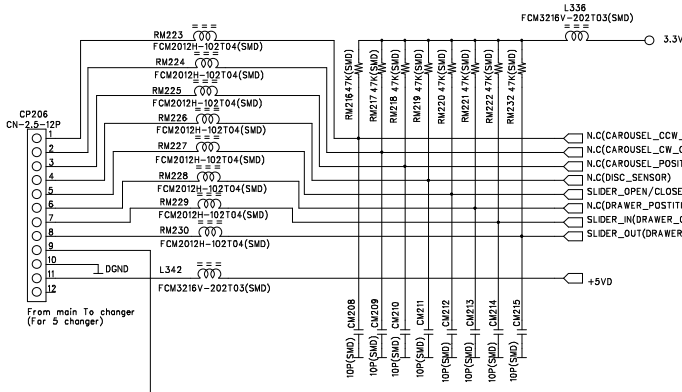
L336
FCM3216V-202T03(SMD)
3.3V
RM223 FCM2012H-102T04(SMD)
RM224 FCM2012H-102T04(SMD)
RM225 FCM2012H-102T04(SMD)
RM226 FCM2012H-102T04(SMD)
RM227 FCM2012H-102T04(SMD)
RM228 FCM2012H-102T04(SMD)
RM229 FCM2012H-102T04(SMD)
RM230 FCM2012H-102T04(SMD)
CP206
CN-2.5-12P
From main To changer
(For 5 changer)
DGND
L342
FCM3216V-202T03(SMD)
+5VD
RM216 47K(SMD)
RM217 47K(SMD)
RM218 47K(SMD)
RM219 47K(SMD)
RM220 47K(SMD)
RM221 47K(SMD)
RM222 47K(SMD)
RM232 47K(SMD)
CM208 10P(SMD)
CM209 10P(SMD)
CM210 10P(SMD)
CM211 10P(SMD)
CM212 10P(SMD)
CM213 10P(SMD)
CM214 10P(SMD)
CM215 10P(SMD)
N.C(CAROUSEL_CCW_
N.C(CAROUSEL_CW_
N.C(CAROUSEL_POSIT
N.C(DISC_SENSOR)
SLIDER_OPEN/CLOSE
N.C(DRAWER_POSITI
SLIDER_IN(DRAWER_
SLIDER_OUT(DRAWER

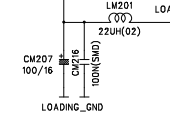
LM201
22UH(02)
CM207
100/16
CM216
100N(SMD)
LOADING_GND

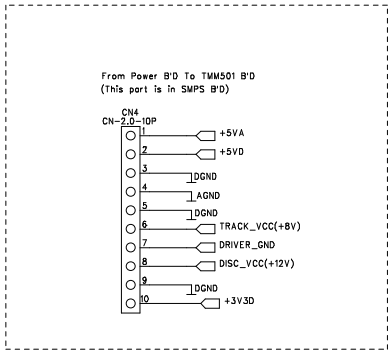
From Power B'D To TMM501 B'D
(This port is in SMPS B'D)
CN4
CN-2.0-10P
+5VA
+5VD
DGND
AGND
DGND
TRACK_VCC(+8V)
DRIVER_GND
DISC_VCC(+12V)
DGND
+3V3D

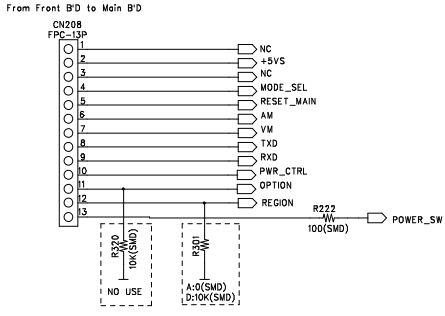
From Front B'D to Main B'D
CN208
FPC-13P
NC
+5VS
NC
MODE_SEL
RESET_MAIN
AM
VM
TXD
RXD
PWR_CTRL
OPTION
REGION
R222
100(SMD)
POWER_SW
R220
10K(SMD)
NO USE
R301
A:0(SMD)
D:10K(SMD)

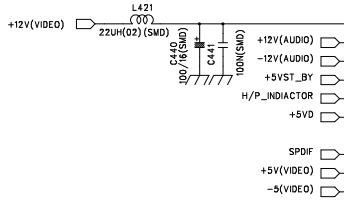
+12V(VIDEO)
L421
22UH(02) (SMD)
C440
100/16(SMD)
C441
100N(SMD)
+12V(AUDIO)
-12V(AUDIO)
+5VST_BY
H/P_INDIACTOR
+5VD
SPDIF
+5V(VIDEO)
-5(VIDEO)

CP212
CN-2.0-02P
-5VA(VIDEO)
+5A(VIDEO)

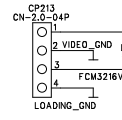
CP213
CN-2.0-04P
2 VIDEO_GND
FCM3216V
LOADING_GND

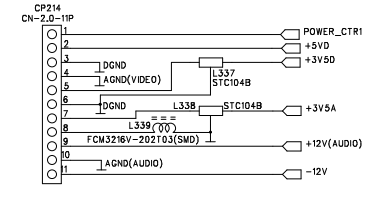
From power B'D to Main B'D
CP214
CN-2.0-11P
POWER_CTRL
+5VD
+3V5D
DGND
AGND(VIDEO)
L337
STC104B
DGND
L338
STC104B
+3V5A
L339
FCM3216V-202T03(SMD)
+12V(AUDIO)
AGND(AUDIO)
-12V

NO	DATE	POS.	CONTENTS	NO	DATE	POS.	CONTENTS

3.3V

SEL_CCW_CTRL)
SEL_CW_CTRL)
SEL_POSITION_SENSOR)
SENSOR)
EN/CLOSE(DRAWER_POSITION_PI1)
R_POSTITION_PI2)
DRAWER_CCW_CTRL)
T(DRAWER_CW_CTRL)

TEST B'D

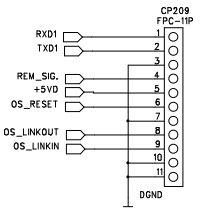

01 LOADING_VCC(+9V)
02)

From Main B'D to Rear B'D

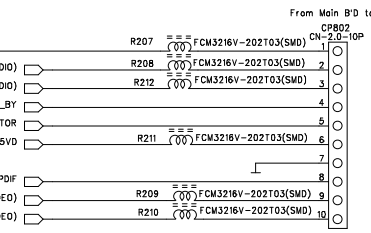

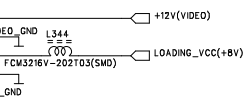

FILENAME miscs.sch	PART NO. MAIN		SHEET 2/5
MODEL DVD600	DESIGN	CHKD	APPROVAL
DESIGN DATE DEC/15/2000			

SCHEMATIC DIAGRAM

NO	DATE	POS.	CONTENTS	NO	DATE	POS.	CONTENTS

DVD600

FLASH 8MBIT/16MBIT

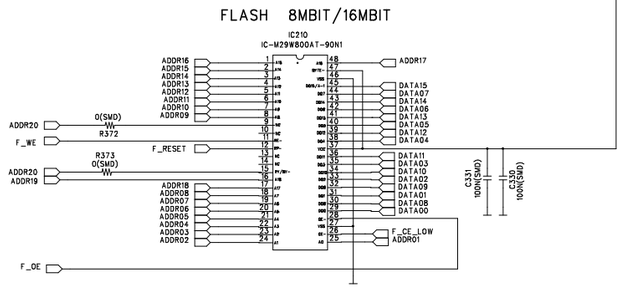

DRAM 16MBIT

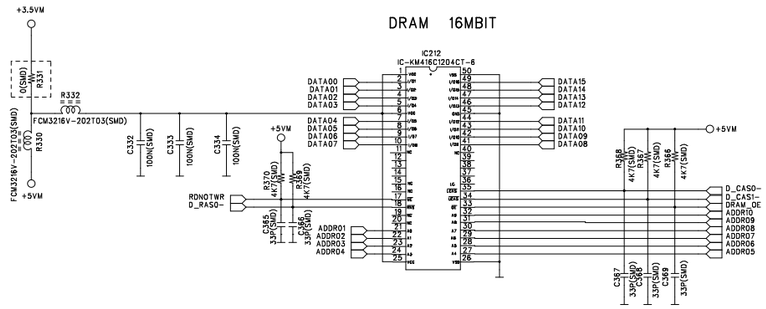

SDRAM 16MBIT

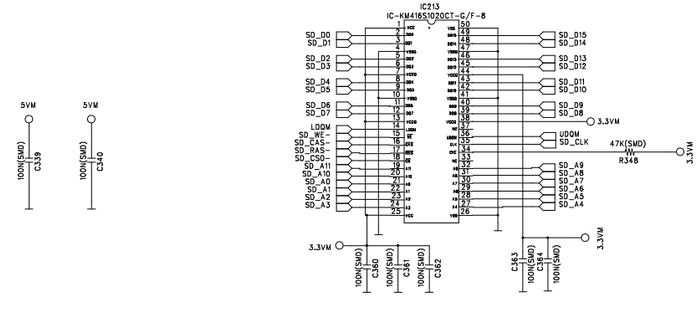

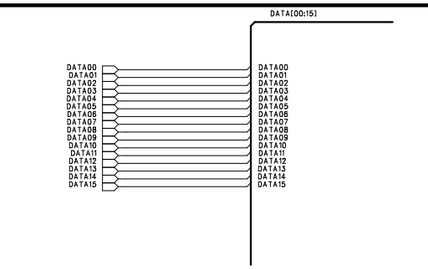

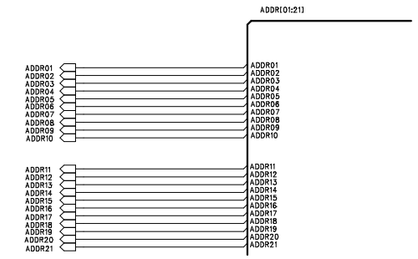

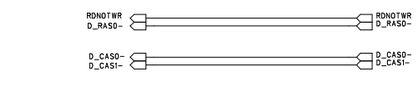

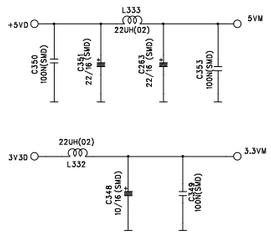

EEPROM

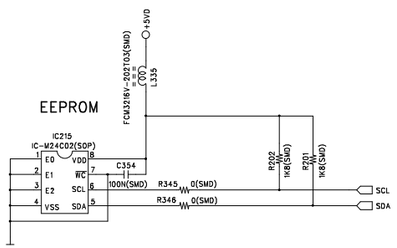

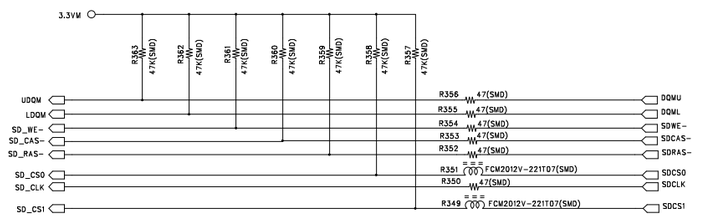

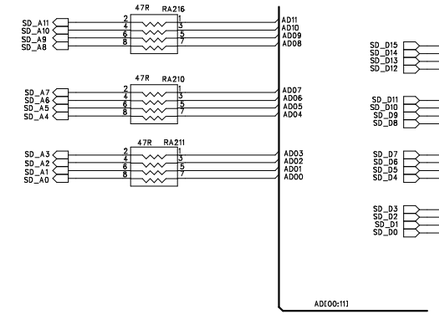

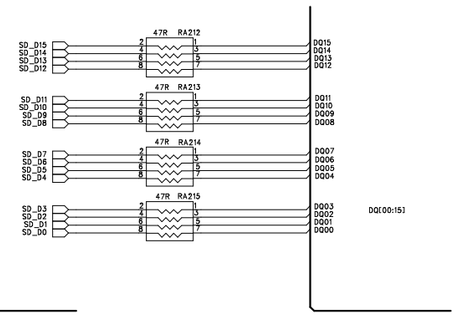

FILENAME MEMORY	PART NO. MAIN		SHEET 3/5
MODEL DVD600	DESIGN	CHKD	APPROVAL
DESIGN DATE DEC/15/2000			

SCHEMATIC DI

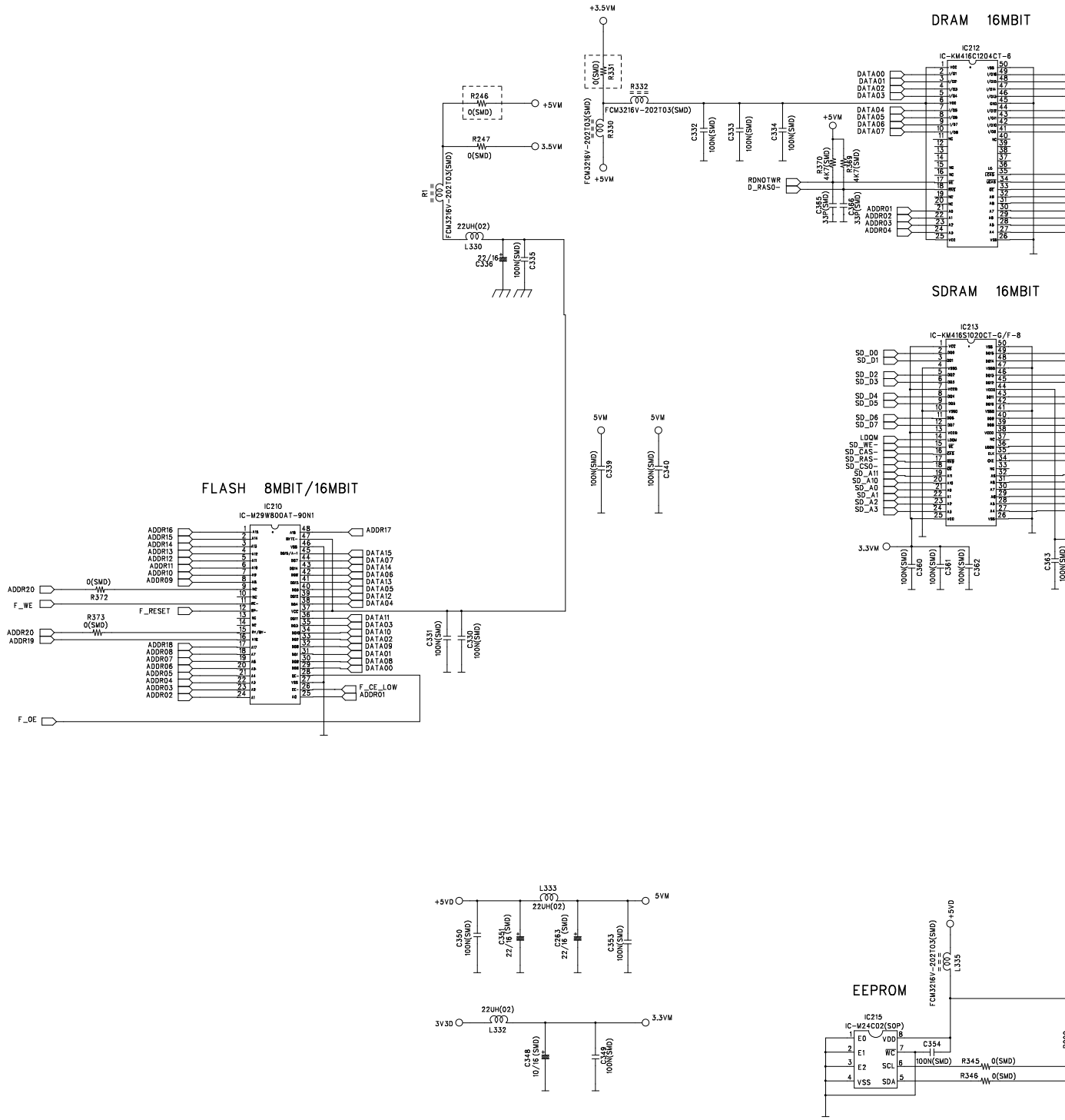

NO	DATE	POS.	CONTENTS	NO	DATE	POS.	CONTENTS

C DIAGRAM

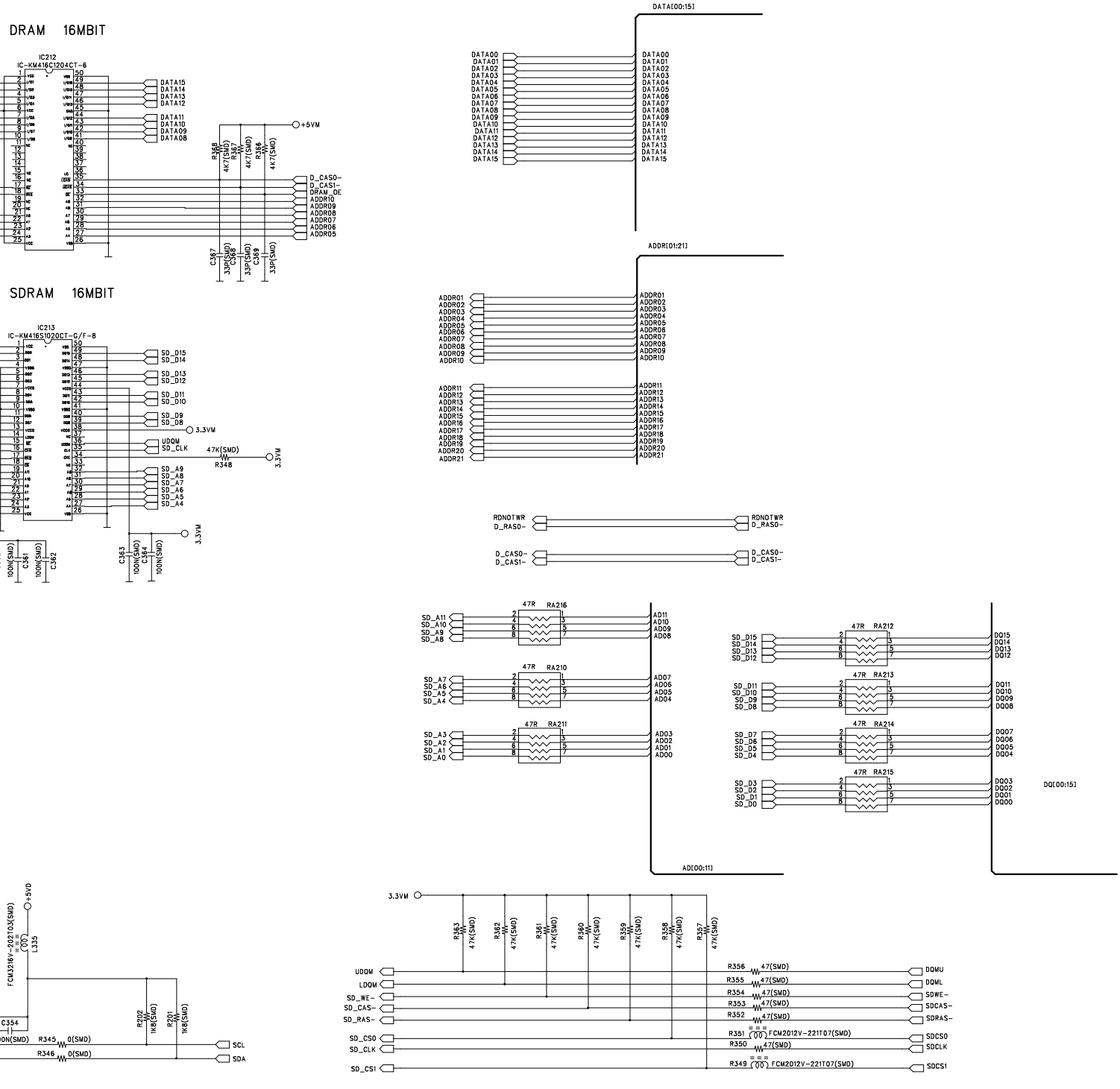

DVD600

FILENAME MEMORY	PART NO. MAIN		SHEET 3/5
MODEL DVD600	DESIGN	CHKD	APPROVAL
DESIGN DATE DEC/15/2000			

SCHEMATIC DIAGRAM

NO	DATE	POS.	CONTENTS	NO	DATE	POS.	CONTENTS

DVD600

IC201

IC-STI5505 **AVB**

(Test Jig)

< TEST B'D >

(OPTION)

TTC KOREA

FILENAME MPEG	PART NO. MAIN		SHEET 1/5
MODEL	DESIGN	CHKD	APPROVAL
DESIGN DATE 4/JAN/2000			

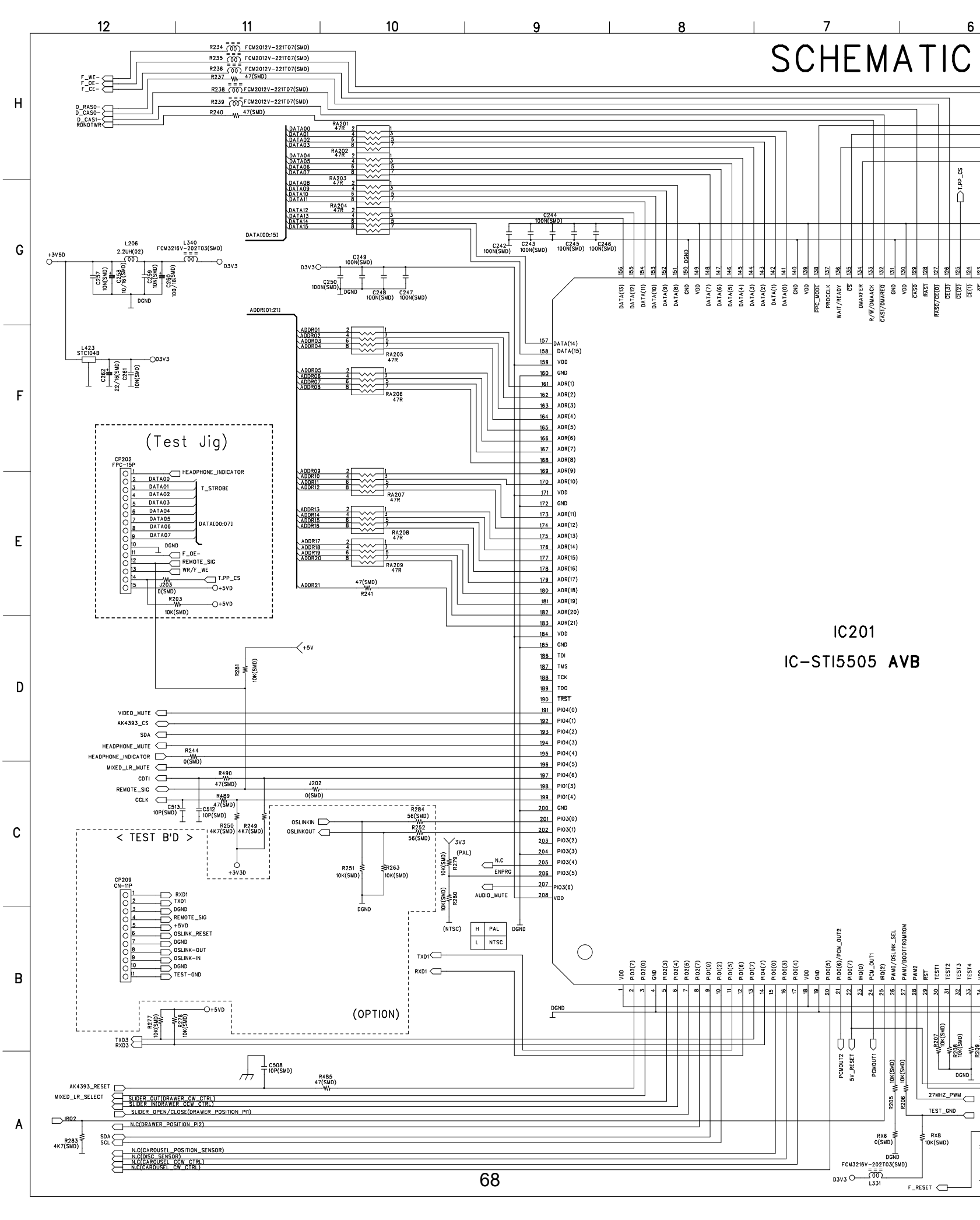
SCHEMATIC
IC201
IC-STI5505 AVB
(Test Jig)
< TEST B'D >
(OPTION)
CP202
FPC-15P
CP209
CN-11P
DATA[00:15]
ADDR[01:21]
DATA[00:07]
T_STROBE
HEADPHONE_INDICATOR
F_OE-
REMOTE_SIG
WR/F_WE
T.PP_CS
+5VD
+3V5D
D3V3
+5V
VIDEO_MUTE
AK4393_CS
SDA
HEADPHONE_MUTE
HEADPHONE_INDICATOR
MIXED_LR_MUTE
CDTI
REMOTE_SIG
CCLK
OSLINKIN
OSLINKOUT
3V3
(PAL)
N.C
ENPRG
AUDIO_MUTE
(NTSC)
H PAL
L NTSC
TXD1
RXD1
TXD3
RXD3
AK4393_RESET
MIXED_LR_SELECT
SLIDER_OUT(DRAWER_CW_CTRL)
SLIDER_IN(DRAWER_CCW_CTRL)
SLIDER_OPEN/CLOSE(DRAWER_POSITION_PI1)
N.C(DRAWER_POSITION_PI2)
N.C(CAROUSEL_POSITION_SENSOR)
N.C(DISC_SENSOR)
N.C(CAROUSEL_CCW_CTRL)
N.C(CAROUSEL_CW_CTRL)
IRQ2
PCMOUT2
5V_RESET
PCMOUT1
27MHZ_PWM
TEST_GND
F_RESET
FCM3216V-202T03(SMD)
L331
DGND

TIC DIAGRAM

DVD600

NO	DATE	POS.	CONTENTS	NO	DATE	POS.	CONTENTS

JBL

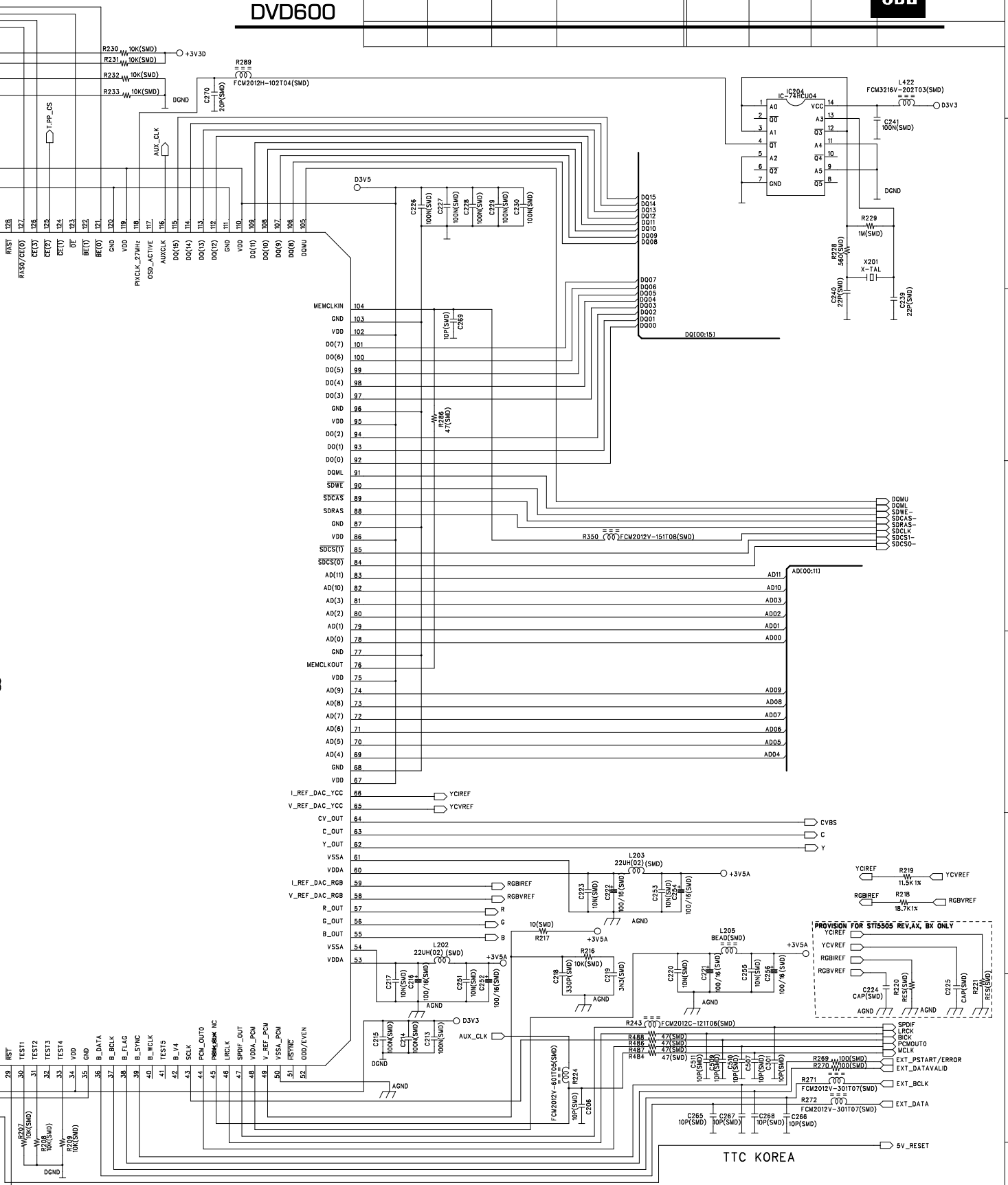

FILENAME	PART NO. MAIN		SHEET 1/5
MPEG			
MODEL	DESIGN	CHKD	APPROVAL
DESIGN DATE 4/JAN/2000			

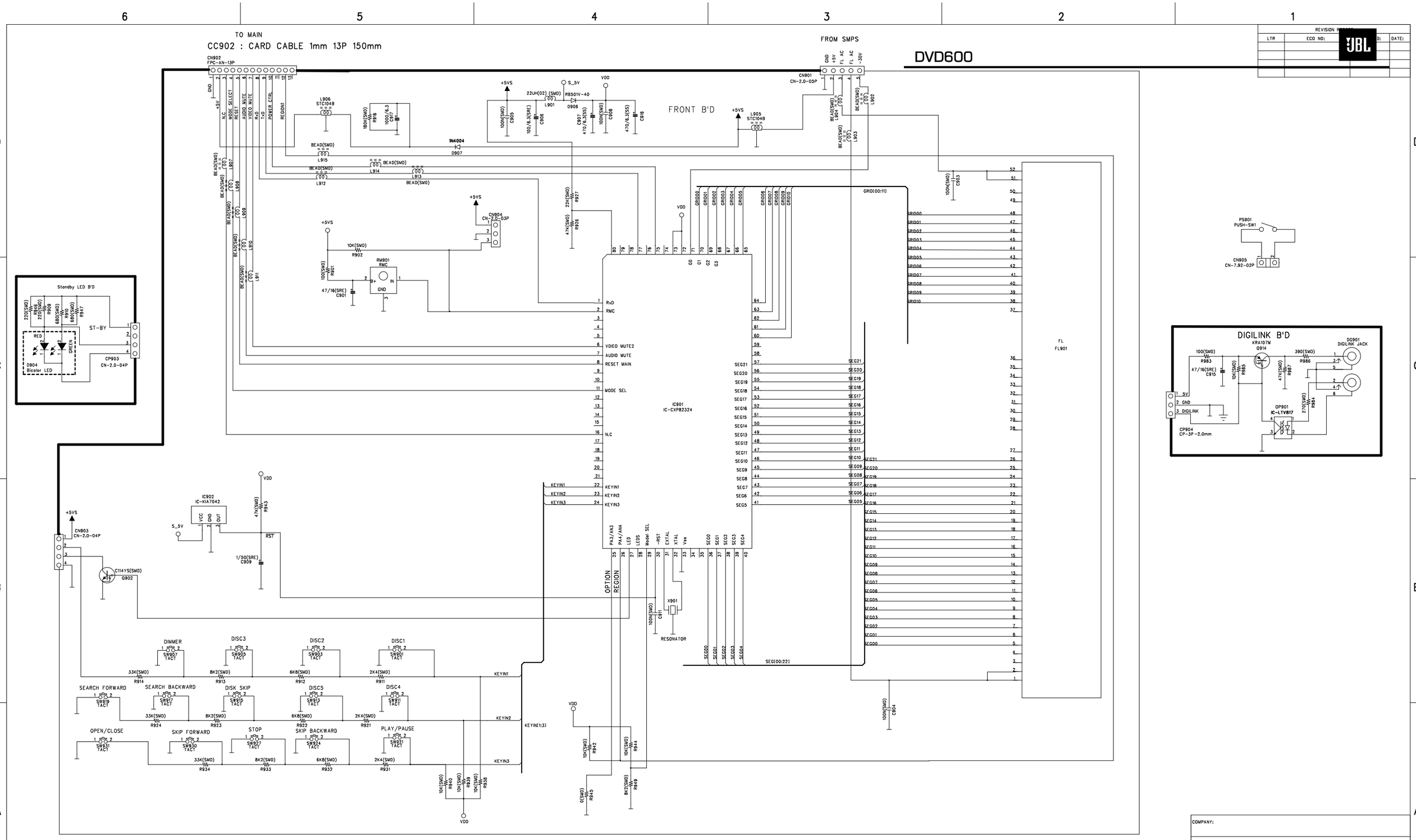

REVISION RECORD			
LTR	ECO NO:		DATE:

DESIGN:	DATED: 26/JAN/2000	COMPANY:			
CHKD:	DATED: 26/JAN/2000	TITLE: FRONT (DVD600)			
CHKD:	DATED: 26/JAN/2000	CODE:	SIZE: A3	DRAWING NO:	REV: 01
APPROVAL:	DATED: 15/DEC/2000	SCALE:		SHEET: 1 OF 1	

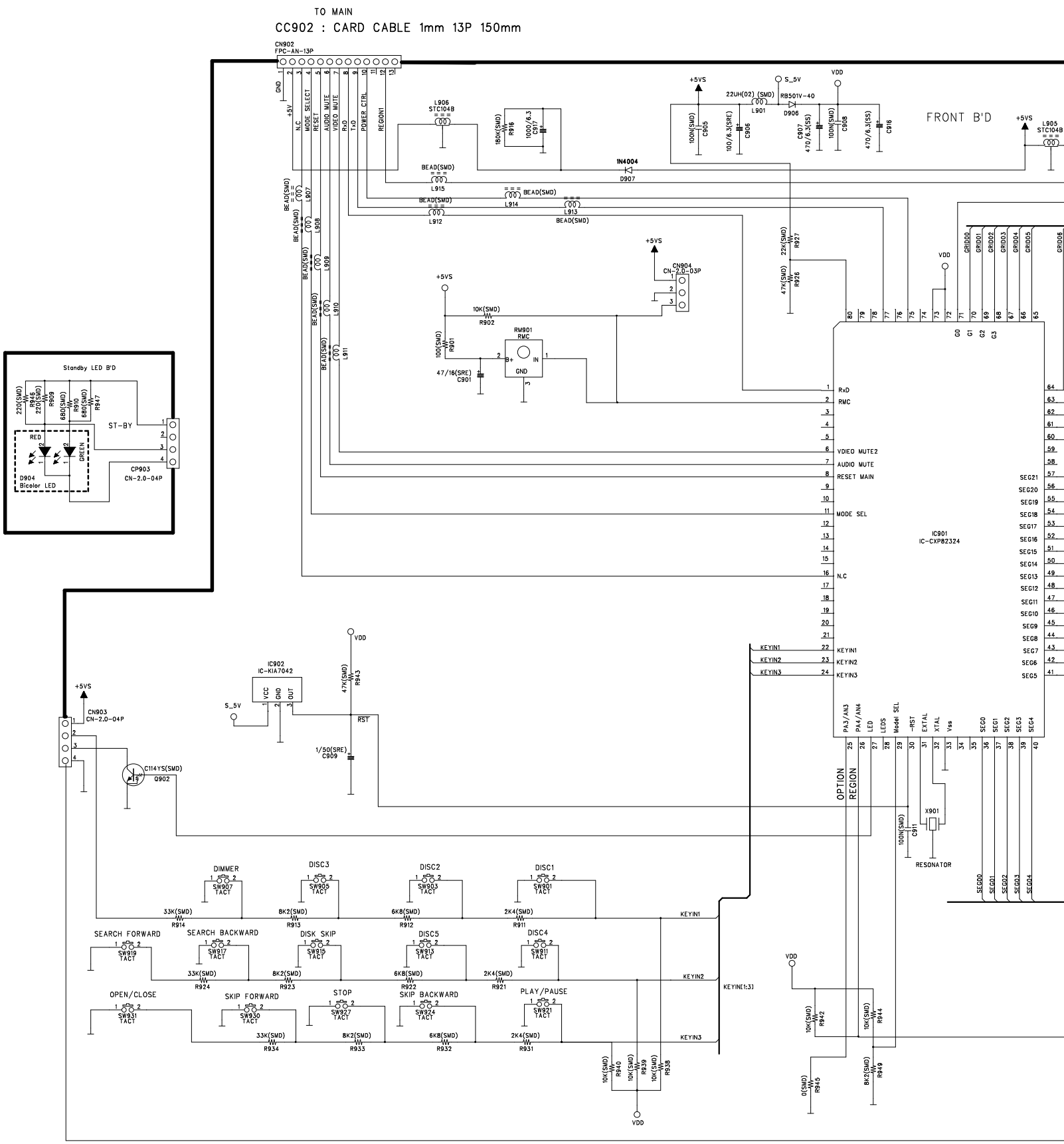
TO MAIN
CC902 : CARD CABLE 1mm 13P 150mm
CN902
FPC-AN-13P
FRONT B'D
IC901
IC-CXP82324
IC902
IC-KIA7042
CN903
CN-2.0-04P
CN904
CN-2.0-03P
CP903
CN-2.0-04P
Standby LED B'D
ST-BY
RED
GREEN
D904
Bicolor LED
Q902
C114YS(SMD)
RM901
RMC
X901
RESONATOR
OPTION
REGION
DIMMER
SEARCH FORWARD
SEARCH BACKWARD
DISK SKIP
DISC5
DISC4
DISC3
DISC2
DISC1
OPEN/CLOSE
SKIP FORWARD
STOP
SKIP BACKWARD
PLAY/PAUSE
KEYIN1
KEYIN2
KEYIN3
KEYIN[1:3]
RST
VDD
+5VS
S_5V

DVD600

LTR	ECO	APPROVED:	DATE:

FROM SMPS

DVD600

CN901
CN-2.0-05P
GND +5V FL AC FL AC -30V

+5VS
L905 STC104B
L904 BEAD(SMD)
L903 BEAD(SMD)
L902 BEAD(SMD)

100N(SMD) C903
100N(SMD) C904

GRID[00:11]
GRID04 GRID05 GRID06 GRID07 GRID08 GRID09 GRID10
SEG[00:22]
SEG21 SEG20 SEG19 SEG18 SEG17 SEG16 SEG15 SEG14 SEG13 SEG12 SEG11 SEG10 SEG9 SEG8 SEG7 SEG6 SEG5 SEG4 SEG3

FL
FL901

PS901
PUSH-SW1
CN905
CN-7.92-02P

DIGILINK B'D
KRA107M
Q914
100(SMD) R983
47/16(SRE) C915
10K(SMD) R985
47K(SMD) R987
390(SMD) R986
270(SMD) R984
DG901
DIGILINK JACK
1 5V
2 GND
3 DIGILINK
CP904
CP-3P-2.0mm
OP901
IC-LTV817

COMPANY:					
TITLE: FRONT (DVD600)					
DESIGN:	DATED: 26/JAN/2000	CODE:	SIZE: A3	DRAWING NO:	REV: 01
CHKD:	DATED: 26/JAN/2000				
CHKD:	DATED: 26/JAN/2000				
APPROVAL:	DATED: 15/DEC/2000	SCALE:		SHEET: 1 OF 1	

DVD600

RC-5920P MECHA SCHEMATIC DIAGRAM

REVISION RECORD			
LTR		APPROVED:	DATE:

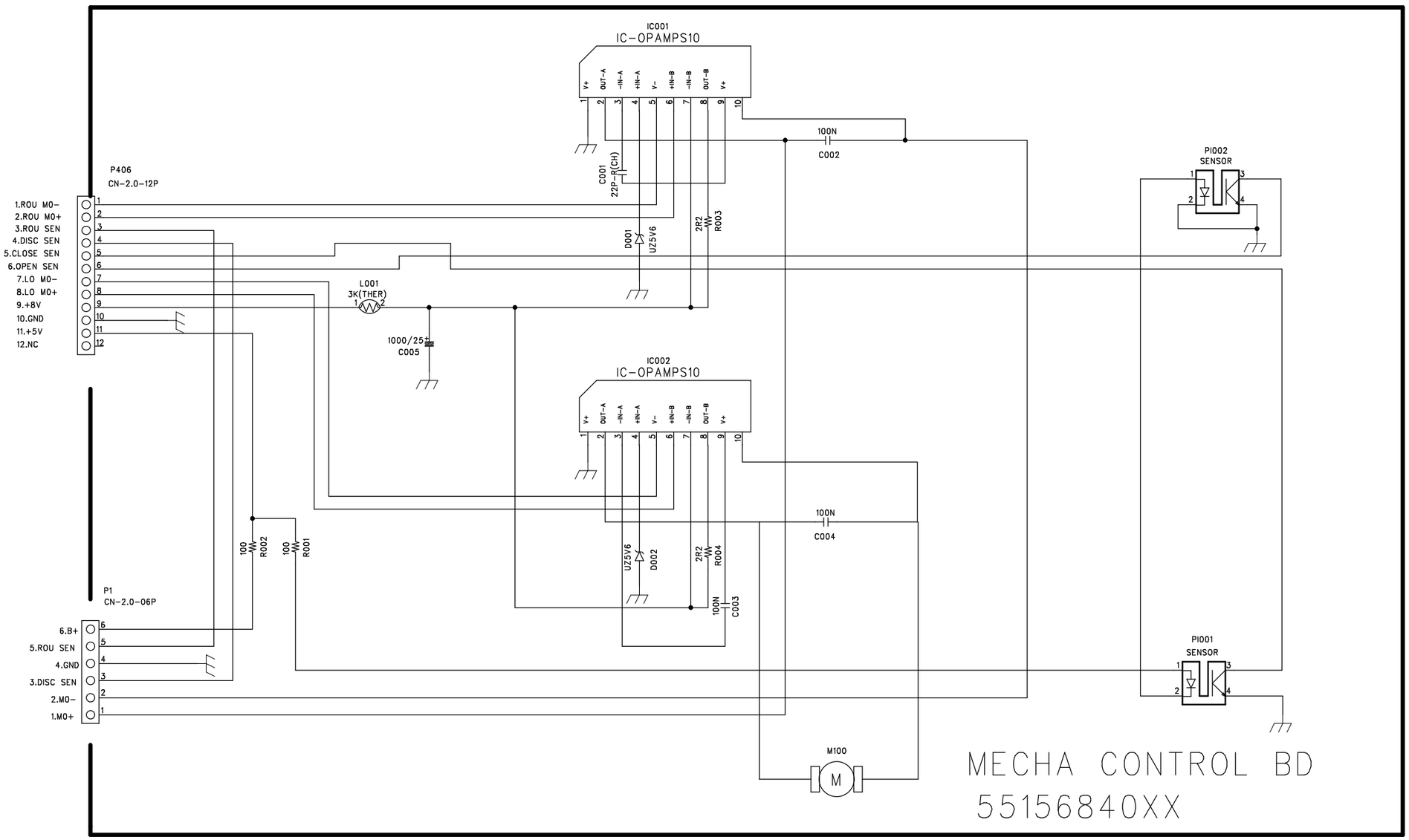

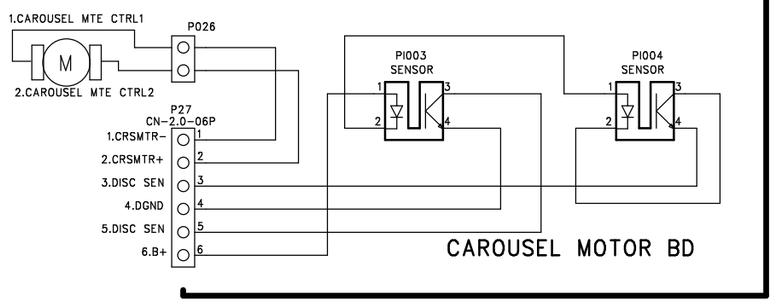

CONFIDENTIAL/CONTROL COPY

FILENAME CONTROL	DRAWING NO.		SHEET /
MODEL	DESIGN	CHKD	APPROVAL
DESIGN DATE 13/AUG/2001			