EJ3.0U

LA

Service
Service
Service

G_16480_000.eps
060207

Service Manual

Contents		Page	
1. Technical Specifications, Connections, and Chassis Overview		2	
2. Safety Instructions, Warnings, and Notes		6	
3. Directions for Use		8	
4. Mechanical Instructions		9	
5. Service Modes, Error Codes, and Fault Finding		17	
6. *Block Diagrams, Test Point Overviews, and Waveforms*			
Wiring Diagram 32”		37	
Wiring Diagram 32” AL		38	
Wiring Diagram 37”-42”		39	
Block Diagram Video		40	
Block Diagram Audio		41	
Block Diagram Control & Clock Signals		42	
Test Point Overview SSB		43-48	
Test Point Overview AL Inter Conn. Panel		49	
I2C IC’s Overview		50	
Supply Lines Overview		51	
7. *Circuit Diagrams and PWB Layouts*		*Diagram*	*PWB*
SSB: DC/DC	(B01A)	52	84-89
SSB: Supply & RS232	(B01B)	53	84-89
SSB: Channel Decoder	(B02A)	54	84-89
SSB: Main Tuner	(B02B)	55	84-89
SSB: MPIF Main: Video Source Selection	(B03A)	56	84-89
SSB: MPIF Main: Supply	(B03B)	57	84-89
SSB: MPIF Main: IF & SAW Filter	(B03C)	58	84-89
SSB: MPIF Main: Audio Source Selection	(B03D)	59	84-89
SSB: MPIF Main: Audio Amplifier	(B03E)	60	84-89
SSB: PNX2015: Audio / Video	(B04A)	61	84-89
SSB: PNX2015: DV I/O Interface	(B04B)	62	84-89
SSB: PNX2015: Tunnelbus	(B04C)	63	84-89
SSB: PNX2015: DDR Interface	(B04D)	64	84-89
SSB: PNX2015: Standby & Control	(B04E)	65	84-89
SSB: PNX2015: Supply	(B04F)	66	84-89

Contents		Page	
SSB: VIPER/PNX2015: Display Interface	(B04G)	67	84-89
SSB: VIPER: Control	(B05A)	68	84-89
SSB: VIPER: Main Memory	(B05B)	69	84-89
SSB: VIPER: A/V & Tunnelbus	(B05C)	70	84-89
SSB: VIPER: Supply	(B05D)	71	84-89
SSB: VIPER: EEPROM	(B05E)	72	84-89
SSB: VIPER: Miscellaneous	(B05F)	73	84-89
SSB: Display Interface: MOP	(B06)	74	84-89
SSB: HDMI & Supply	(B07A)	75	84-89
SSB: HDMI I/O & Control	(B07B)	76	84-89
SSB: Analog I/O	(B07C)	77	84-89
SSB: Uart	(B07D)	78	84-89
SSB: HDMI	(B07E)	79	84-89
SSB: Audio: Amplifier	(B08A)	80	84-89
SSB: Audio: Connectors	(B08B)	81	84-89
SSB: SRP List		81-83	
Side A/V Panel	(D)	90	91
Keyboard Control Panel	(E)	92	93
Front IR / LED Panel	(J)	94	95
AL Inter Connect Panel: DC/DC Converter	(M1)	96	101-102
AL Inter Connect Panel: Pacific 3	(M2)	97	101-102
AL Inter Connect Panel: Display Interface	(M3)	98	101-102
AL Inter Connect Panel: Inter Connection	(M4)	99	101-102
AL Inter Connect Panel: DC/DC Ambi	(M5)	100	101-102
8. Alignments		103	
9. Circuit Descriptions, Abbreviation List, and IC Data Sheets		109	
Abbreviation List		112	
IC Data Sheets		114	
10. Spare Parts List		125	
11. Revision List		133	

©Copyright 2007 Philips Consumer Electronics B.V. Eindhoven, The Netherlands.
All rights reserved. No part of this publication may be reproduced, stored in a retrieval system or transmitted, in any form or by any means, electronic, mechanical, photocopying, or otherwise without the prior permission of Philips.

Published by WS 0762 BG CD Customer Service Printed in the Netherlands Subject to modification EN 3122 785 16840

PHILIPS

1. Technical Specifications, Connections, and Chassis Overview

Index of this chapter:

1.1 Technical Specifications
1.2 Connection Overview
1.3 Chassis Overview

Notes:

- Some models in this chassis range have a different mechanical construction. The information given here is therefore model specific.
- Figures below can deviate slightly from the actual situation, due to the different set executions.
- Specifications are indicative (subject to change).

1.1 Technical Specifications

1.1.1 Vision

Display type	:	LCD
Aspect ratio	:	16: 9
Screen size(s)	:	26” (67 cm)
	:	32” (82 cm)
	:	37” (94 cm)
	:	42” (107 cm)
	:	47” (119 cm)
Resolution	:	
- for 42 and 47PFL5422D/37	:	1920(*3) x 1080p
- for all other models	:	1366(*3) x 768p
Typical contrast ratio	:	700: 1 (26”)
	:	800: 1 (32”)
	:	1,000: 1 (37”)
	:	1,000: 1 (42”)
	:	800: 1 (47”)
Minimum light output (cd/m^2)	:	500
Maximum response time (ms)	:	15 (26”)
	:	9 (32”)
	:	6 (37”)
	:	5 (42”)
	:	8 (47”)
Viewing angle (HxV degrees)	:	178 x 178
Tuning system	:	PLL
TV Color systems	:	ATSC, NTSC
Video playback	:	NTSC
Cable	:	Unscrambled digital cable - QAM
Tuner bands	:	VHF, UHF, S-channel, Hyperband
Supported video formats	:	480i @ 60Hz
	:	480p @ 60Hz
	:	720p @ 60Hz
	:	1080i @ 60Hz

1.1.2 Sound

Sound systems	:	AV Stereo
	:	BTSC
	:	Dolby Digital (AC3)
Maximum power (W_{RMS})	:	2 x 10 (26 and 32”)
	:	2 x 15 (37, 42, 47 and 50”)

1.1.3 Multimedia

Supported file formats	:	JPEG
	:	MP3
	:	Slideshow (.alb)
USB input	:	USB1.1

1.1.4 Miscellaneous

Power supply:		
- Mains voltage (V_{AC})	:	110 - 240
Ambient conditions:		
- Temperature range (°C)	:	+5 to +35
- Maximum humidity	:	90% R.H.
Power consumption:		
- Normal operation (W)	:	125 (26”)
	:	155 (32”)
	:	210 (37”)
	:	275 (42”)
	:	TBF (47”)
- Stand-by (W)	:	< 1
Dimensions (W x H x D in inches)	:	TBF (26”)
	:	31.7 x 24.0 x 8.3 (32”)
	:	36.7 x 24.6 x 4.7 (37”)
	:	41.1 x 27.0 x 4.5 (42”)
	:	TBF (47”)
Weight, stand included (kg/lbs)	:	TBF (26”)
	:	18 / 39.8 (32”)
	:	26 / 57 (37”)
	:	32 / 70.4 (42”)
	:	TBF (47”)

1.2 Connection Overview

Note: The following connector color abbreviations are used (acc. to DIN/IEC 757): Bk= Black, Bu= Blue, Gn= Green, Gy= Grey, Rd= Red, Wh= White, and Ye= Yellow.

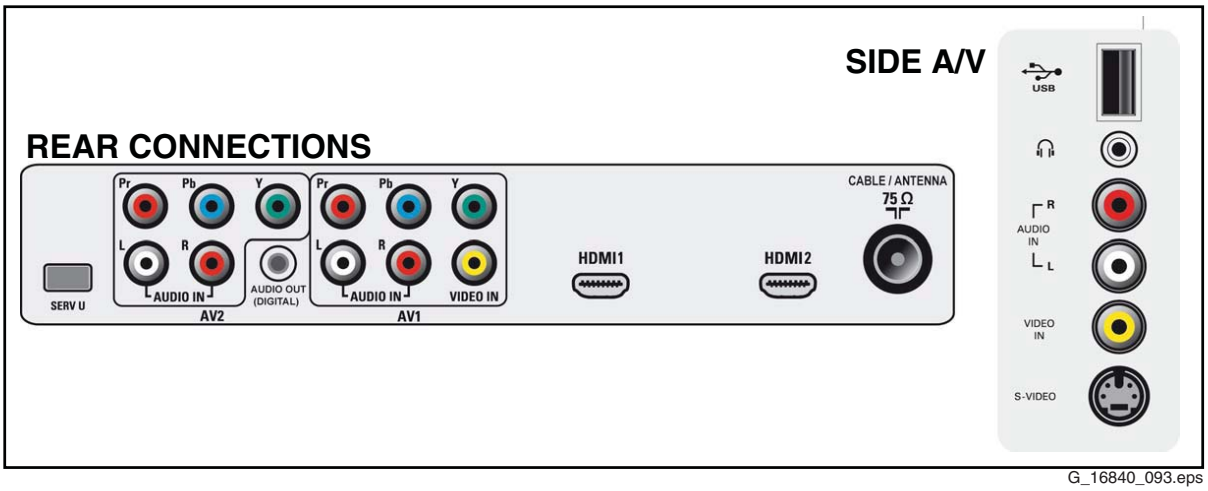

G_16840_093.eps
060207

Figure 1-1 Rear and side A/V connections

1.2.1 Side Connections

USB1.1

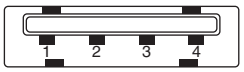

E_06532_022.eps
300904

Figure 1-2 USB (type A)

1	- +5V		
2	- Data (-)		
3	- Data (+)		
4	- Ground	Gnd	

Mini Jack: Audio Headphone - Out

Bk	- Headphone	32 - 600 ohm / 10 mW	

Cinch: Video CVBS - In, Audio - In

Ye	- Video CVBS	1 V_{PP} / 75 ohm	
Wh	- Audio L	0.5 V_{RMS} / 10 kohm	
Rd	- Audio R	0.5 V_{RMS} / 10 kohm	

S-Video (Hosiden): Video Y/C - In

1	- Ground Y	Gnd	
2	- Ground C	Gnd	
3	- Video Y	1 V_{PP} / 75 ohm	
4	- Video C	0.3 V_{PP}P / 75 ohm	

1.2.2 Rear Connections

AV2 Cinch: Video YPbPr - In

Gn	- Video Y	1 V_{PP} / 75 ohm	
Bu	- Video Pb	0.7 V_{PP} / 75 ohm	
Rd	- Video Pr	0.7 V_{PP} / 75 ohm	

AV2 Cinch: Audio - In

Wh	- Audio L	0.5 V_{RMS} / 10 kohm	
Rd	- Audio R	0.5 V_{RMS} / 10 kohm	

Cinch: S/PDIF - Out

Bk	- Coaxial	0.4 - 0.6V_{PP} / 75 ohm	

AV1 Cinch: Video YPbPr - In

Gn	- Video Y	1 V_{PP} / 75 ohm	
Bu	- Video Pb	0.7 V_{PP} / 75 ohm	
Rd	- Video Pr	0.7 V_{PP} / 75 ohm	

AV1 Cinch: Video CVBS - In

Ye	- Video CVBS	1 V_{PP} / 75 ohm	

AV1 Cinch: Audio - In

Wh	- Audio L	0.5 V_{RMS} / 10 kohm	
Rd	- Audio R	0.5 V_{RMS} / 10 kohm	

HDMI 1 & HDMI 2: Digital Video, Digital Audio - In

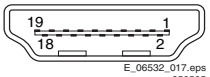

E_06532_017.eps
250505

Figure 1-3 HDMI (type A) connector

1	- D2+	Data channel	
2	- Shield	Gnd	
3	- D2-	Data channel	
4	- D1+	Data channel	
5	- Shield	Gnd	
6	- D1-	Data channel	
7	- D0+	Data channel	
8	- Shield	Gnd	
9	- D0-	Data channel	
10	- CLK+	Data channel	
11	- Shield	Gnd	
12	- CLK-	Data channel	
13	- n.c.		
14	- n.c.		
15	- DDC_SCL	DDC clock	
16	- DDC_SDA	DDC data	
17	- Ground	Gnd	
18	- +5V		
19	- HPD	Hot Plug Detect	
20	- Ground	Gnd	

Aerial - In

-	- F-type (US)	Coax, 75 ohm	

1.3 Chassis Overview

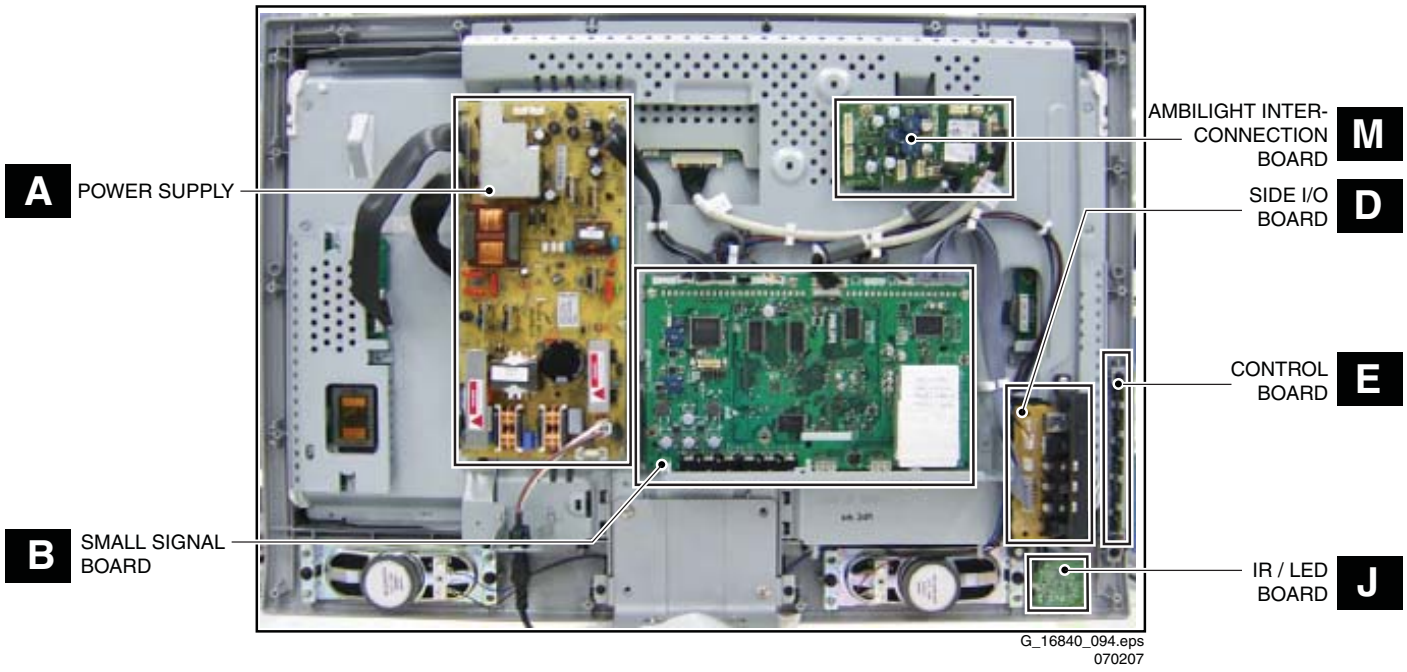

Figure 1-4 PWB/CBA locations (26-inch model)

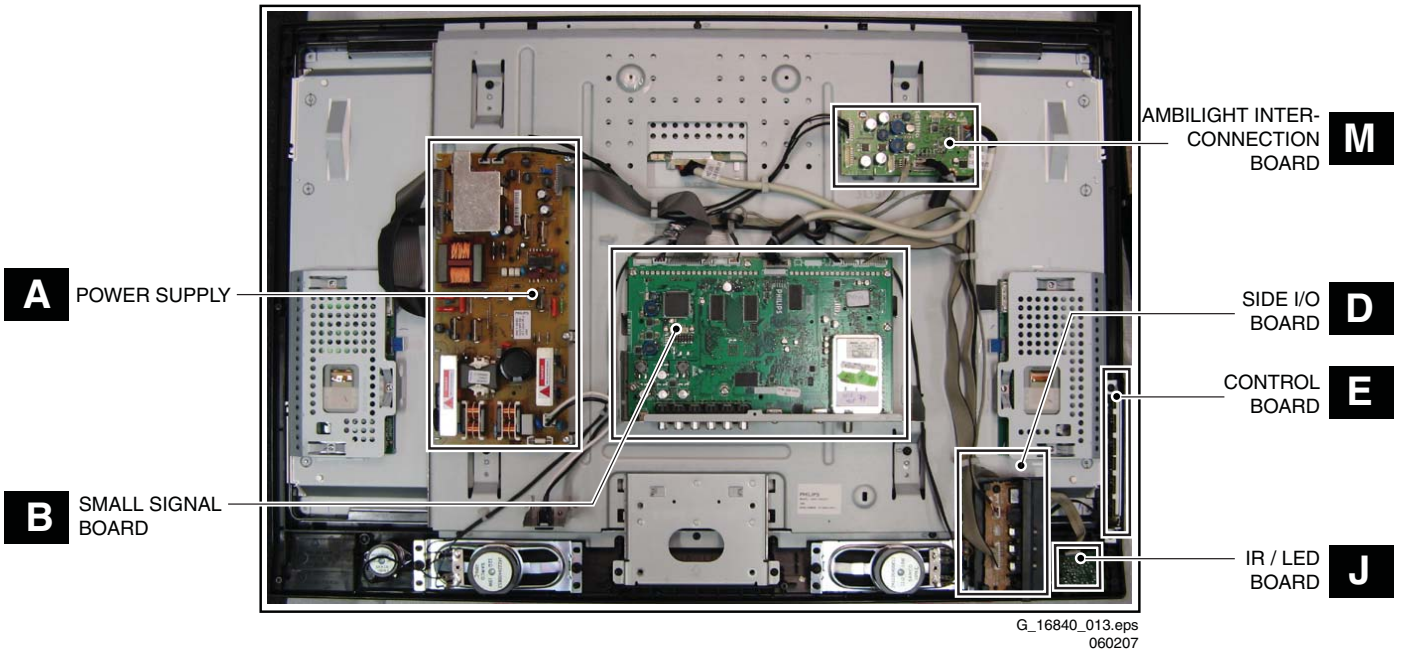

Figure 1-5 PWB/CBA locations (32-inch model)

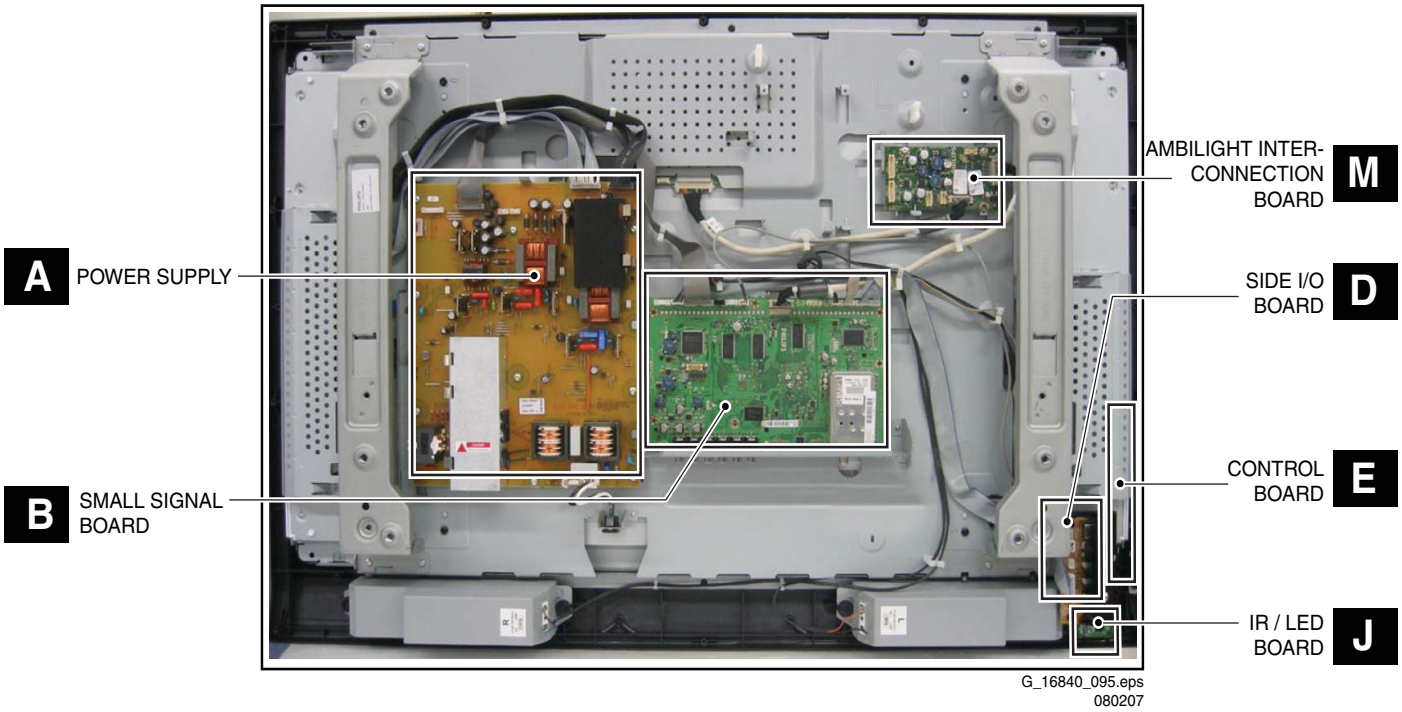

Figure 1-6 PWB/CBA locations (37-inch model)

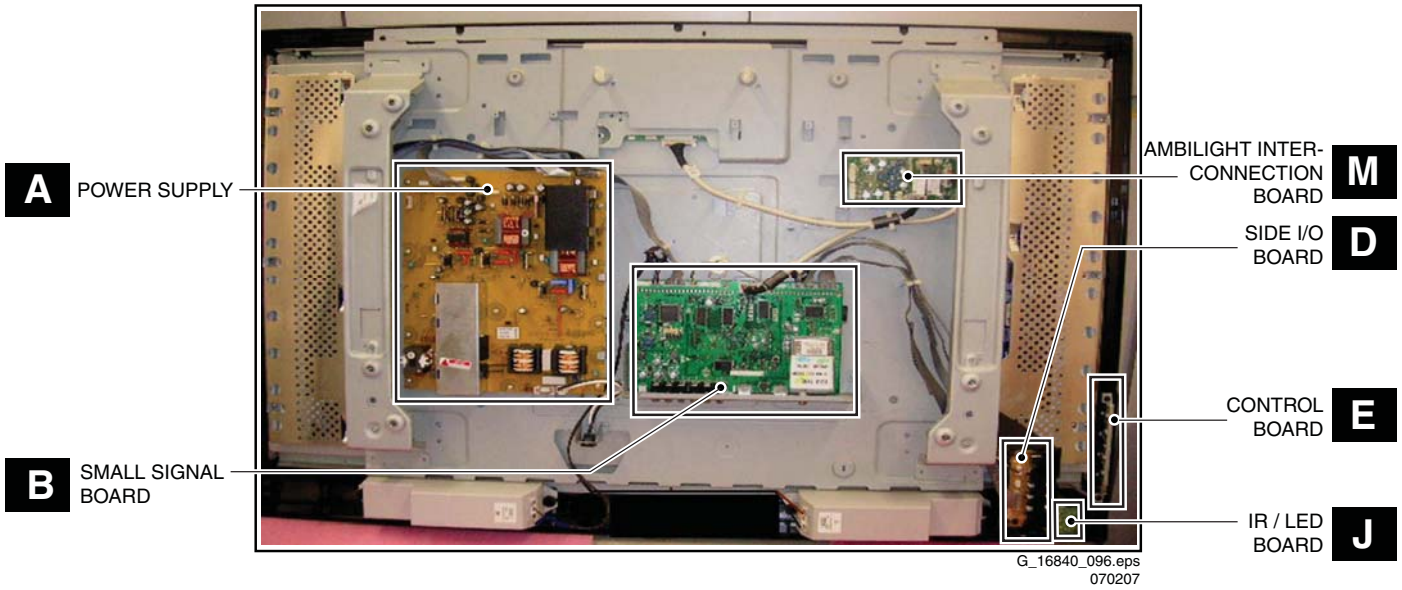

Figure 1-7 PWB/CBA locations (42-inch model)

2. Safety Instructions, Warnings, and Notes

Index of this chapter:

2.1 Safety Instructions
2.2 Warnings
2.3 Notes

2.1 Safety Instructions

Safety regulations require the following **during** a repair:

- Connect the set to the Mains/AC Power via an isolation transformer (> 800 VA).
- Replace safety components, indicated by the symbol ⚠, only by components identical to the original ones. Any other component substitution (other than original type) may increase risk of fire or electrical shock hazard.

Safety regulations require that **after** a repair, the set must be returned in its original condition. Pay in particular attention to the following points:

- Route the wire trees correctly and fix them with the mounted cable clamps.
- Check the insulation of the Mains/AC Power lead for external damage.
- Check the strain relief of the Mains/AC Power cord for proper function.
- Check the electrical DC resistance between the Mains/AC Power plug and the secondary side (only for sets that have a Mains/AC Power isolated power supply):
  1. Unplug the Mains/AC Power cord and connect a wire between the two pins of the Mains/AC Power plug.
  2. Set the Mains/AC Power switch to the "on" position (keep the Mains/AC Power cord unplugged!).
  3. Measure the resistance value between the pins of the Mains/AC Power plug and the metal shielding of the tuner or the aerial connection on the set. The reading should be between 4.5 Mohm and 12 Mohm.
  4. Switch "off" the set, and remove the wire between the two pins of the Mains/AC Power plug.
- Check the cabinet for defects, to prevent touching of any inner parts by the customer.

2.2 Warnings

- All ICs and many other semiconductors are susceptible to electrostatic discharges (ESD ⚠). Careless handling during repair can reduce life drastically. Make sure that, during repair, you are connected with the same potential as the mass of the set by a wristband with resistance. Keep components and tools also at this same potential. Available ESD protection equipment:
  – Complete kit ESD3 (small tablemat, wristband, connection box, extension cable and earth cable) 4822 310 10671.
  – Wristband tester 4822 344 13999.
- Be careful during measurements in the high voltage section.
- Never replace modules or other components while the unit is switched "on".
- When you align the set, use plastic rather than metal tools. This will prevent any short circuits and the danger of a circuit becoming unstable.

2.3 Notes

2.3.1 General

- Measure the voltages and waveforms with regard to the chassis (= tuner) ground (⏚), or hot ground (⏚), depending on the tested area of circuitry. The voltages and waveforms shown in the diagrams are indicative. Measure them in the Service Default Mode (see chapter 5) with a color bar signal and stereo sound (L: 3 kHz, R: 1 kHz unless stated otherwise) and picture carrier at 475.25 MHz for PAL, or 61.25 MHz for NTSC (channel 3).
- Where necessary, measure the waveforms and voltages with (⊓) and without (⊼) aerial signal. Measure the voltages in the power supply section both in normal operation (⏻) and in stand-by (⏻). These values are indicated by means of the appropriate symbols.

2.3.2 Schematic Notes

- All resistor values are in ohms, and the value multiplier is often used to indicate the decimal point location (e.g. 2K2 indicates 2.2 kohm).
- Resistor values with no multiplier may be indicated with either an "E" or an "R" (e.g. 220E or 220R indicates 220 ohm).
- All capacitor values are given in micro-farads (μ= x10^{-6}), nano-farads (n= x10^{-9}), or pico-farads (p= x10^{-12}).
- Capacitor values may also use the value multiplier as the decimal point indication (e.g. 2p2 indicates 2.2 pF).
- An "asterisk" (*) indicates component usage varies. Refer to the diversity tables for the correct values.
- The correct component values are listed in the Spare Parts List. Therefore, always check this list when there is any doubt.

2.3.3 BGA (Ball Grid Array) ICs

Introduction

For more information on how to handle BGA devices, visit this URL: *www.atyourservice.ce.philips.com* (needs subscription, not available for all regions). After login, select “Magazine”, then go to “Repair downloads”. Here you will find Information on how to deal with BGA-ICs.

BGA Temperature Profiles

For BGA-ICs, you **must** use the correct temperature-profile, which is coupled to the 12NC. For an overview of these profiles, visit the website *www.atyourservice.ce.philips.com* (needs subscription, but is not available for all regions)
You will find this and more technical information within the "Magazine", chapter "Repair downloads".
For additional questions please contact your local repair help desk.

2.3.4 Lead-free Soldering

Due to lead-free technology some rules have to be respected by the workshop during a repair:

- Use only lead-free soldering tin Philips SAC305 with order code 0622 149 00106. If lead-free solder paste is required, please contact the manufacturer of your soldering equipment. In general, use of solder paste within workshops should be avoided because paste is not easy to store and to handle.
- Use only adequate solder tools applicable for lead-free soldering tin. The solder tool must be able:
  – To reach a solder-tip temperature of at least 400°C.
  – To stabilize the adjusted temperature at the solder-tip.
  – To exchange solder-tips for different applications.
- Adjust your solder tool so that a temperature of around 360°C - 380°C is reached and stabilized at the solder joint. Heating time of the solder-joint should not exceed ~ 4 sec. Avoid temperatures above 400°C, otherwise wear-out of tips will increase drastically and flux-fluid will be destroyed. To avoid wear-out of tips, switch “off” unused equipment or reduce heat.

- Mix of lead-free soldering tin/parts with leaded soldering tin/parts is possible but PHILIPS recommends strongly **to avoid** mixed regimes. If this cannot be avoided, carefully clear the solder-joint from old tin and re-solder with new tin.

2.3.5 Alternative BOM identification

The **third digit** in the serial number (example: AG**2**B0335000001) indicates the number of the alternative B.O.M. (Bill Of Materials) that has been used for producing the specific TV set. In general, it is possible that the same TV model on the market is produced with e.g. two different types of displays, coming from two different suppliers. This will then result in sets which have the same CTN (Commercial Type Number; e.g. 28PW9515/12) but which have a different B.O.M. number.
By looking at the third digit of the serial number, one can identify which B.O.M. is used for the TV set he is working with. If the third digit of the serial number contains the number “1” (example: AG**1**B033500001), then the TV set has been manufactured according to B.O.M. number 1. If the third digit is a “2” (example: AG**2**B0335000001), then the set has been produced according to B.O.M. no. 2. ***This is important for ordering the correct spare parts!***
For the third digit, the numbers 1...9 and the characters A...Z can be used, so in total: 9 plus 26= 35 different B.O.M.s can be indicated by the third digit of the serial number.

Identification: The bottom line of a type plate gives a 14-digit serial number. Digits 1 and 2 refer to the production center (e.g. AG is Bruges), digit 3 refers to the B.O.M. code, digit 4 refers to the Service version change code, digits 5 and 6 refer to the production year, and digits 7 and 8 refer to production week (in example below it is 2006 week 17). The 6 last digits contain the serial number.

E_06532_024.eps
130606

Figure 2-1 Serial number (example)

2.3.6 Board Level Repair (BLR) or Component Level Repair (CLR)

If a board is defective, consult your repair procedure to decide if the board has to be exchanged or if it should be repaired on component level.
If your repair procedure says the board should be exchanged completely, do not solder on the defective board. Otherwise, it cannot be returned to the O.E.M. supplier for back charging!

2.3.7 Practical Service Precautions

- **It makes sense to avoid exposure to electrical shock.** While some sources are expected to have a possible dangerous impact, others of quite high potential are of limited current and are sometimes held in less regard.
- **Always respect voltages**. While some may not be dangerous in themselves, they can cause unexpected reactions that are best avoided. Before reaching into a powered TV set, it is best to test the high voltage insulation. It is easy to do, and is a good service precaution.

3. Directions for Use

You can download this information from the following websites:
http://www.philips.com/support
http://www.p4c.philips.com

4. Mechanical Instructions

Index of this chapter:

4.1 Cable Dressing
4.2 Service Positions
4.3 Assy/Panel Removal
4.4 Set Re-assembly

Notes:

- Several models in this chassis range have a different mechanical construction, the instructions given in this chapter are therefore very model specific.
- Figures below are taken from the 32PFL7332D/37 model, and can deviate from the actual situation, due to the different set executions.
- The EJ3.0U LA chassis is based on the EL1.1U chassis. If the situation at hand differs too much from the description below, please refer to the manual of that chassis (12NC: 312278516290).
- Follow the disassembly instructions in described order.

4.1 Cable Dressing

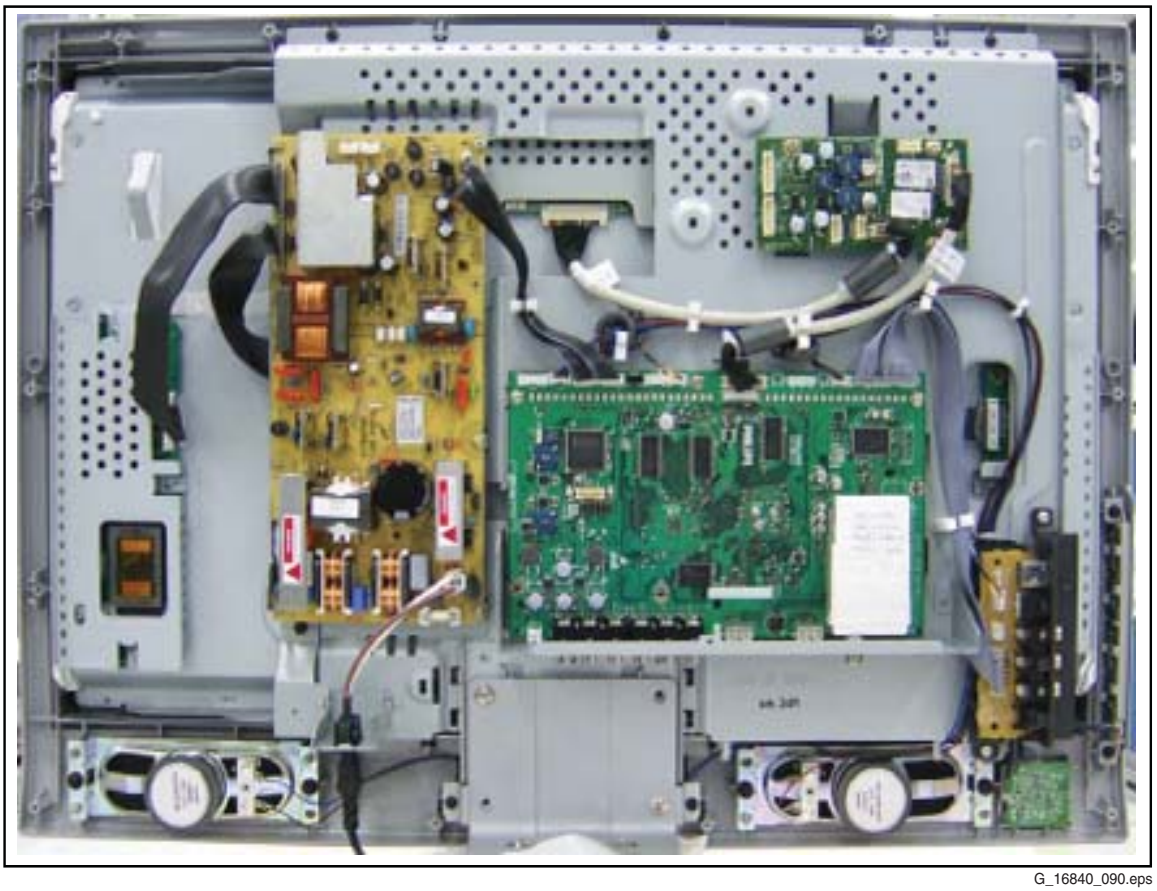

G_16840_090.eps
070207

Figure 4-1 Cable dressing (26-inch model)

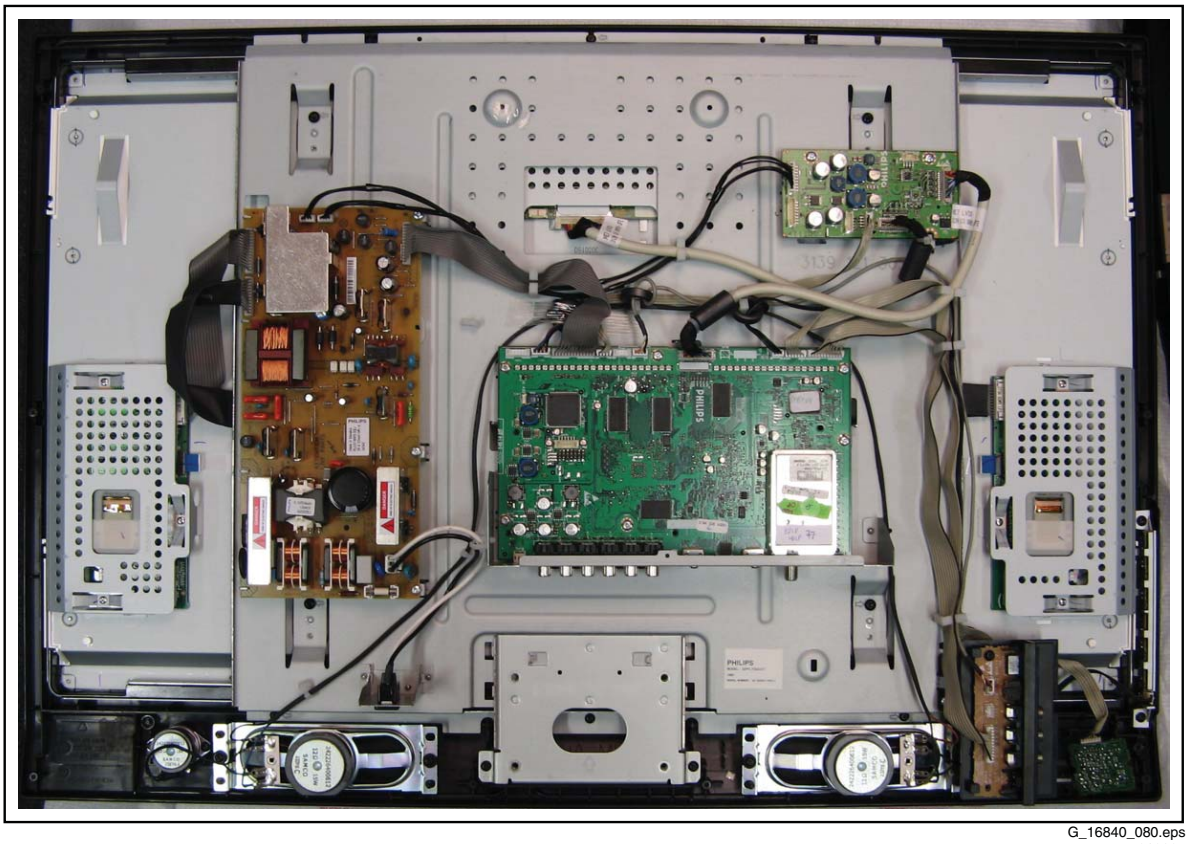

G_16840_080.eps
010207

Figure 4-2 Cable dressing (32-inch model)

G_16840_091.eps
060207

Figure 4-3 Cable dressing (37-inch model)

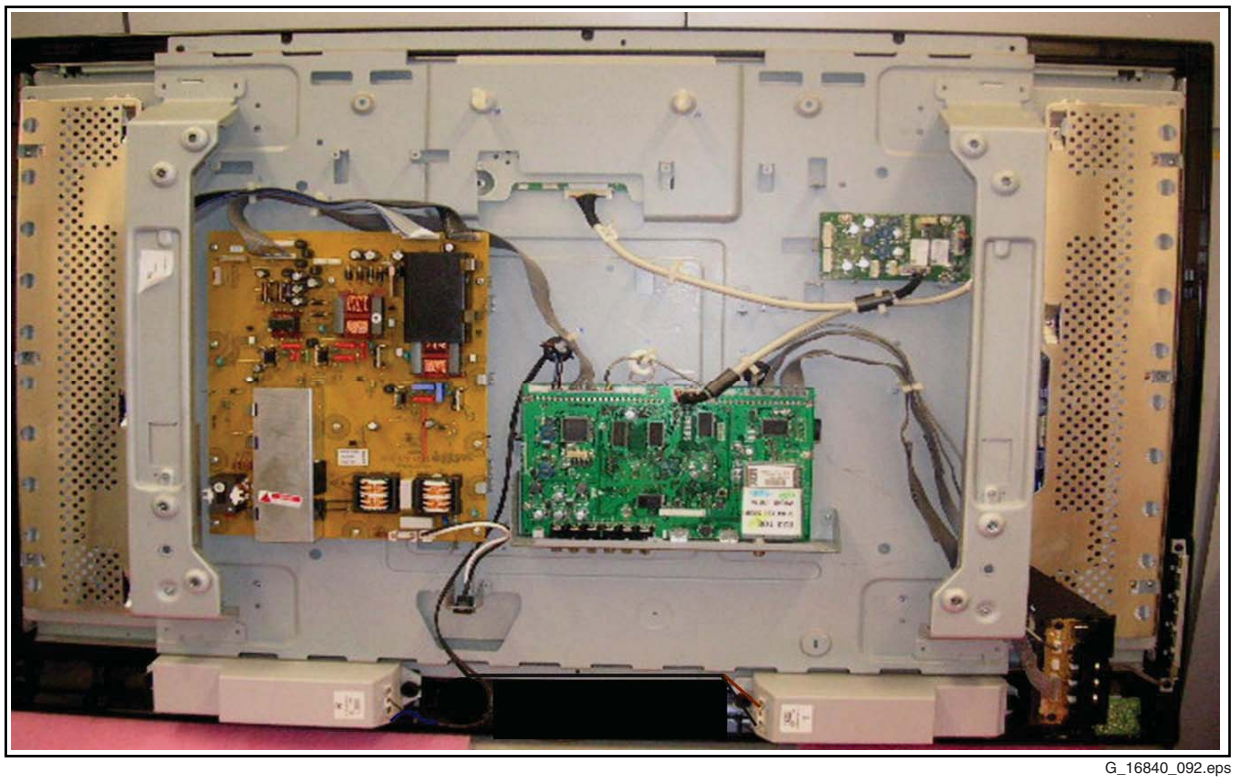

G_16840_092.eps
060207

Figure 4-4 Cable dressing (42-inch model)

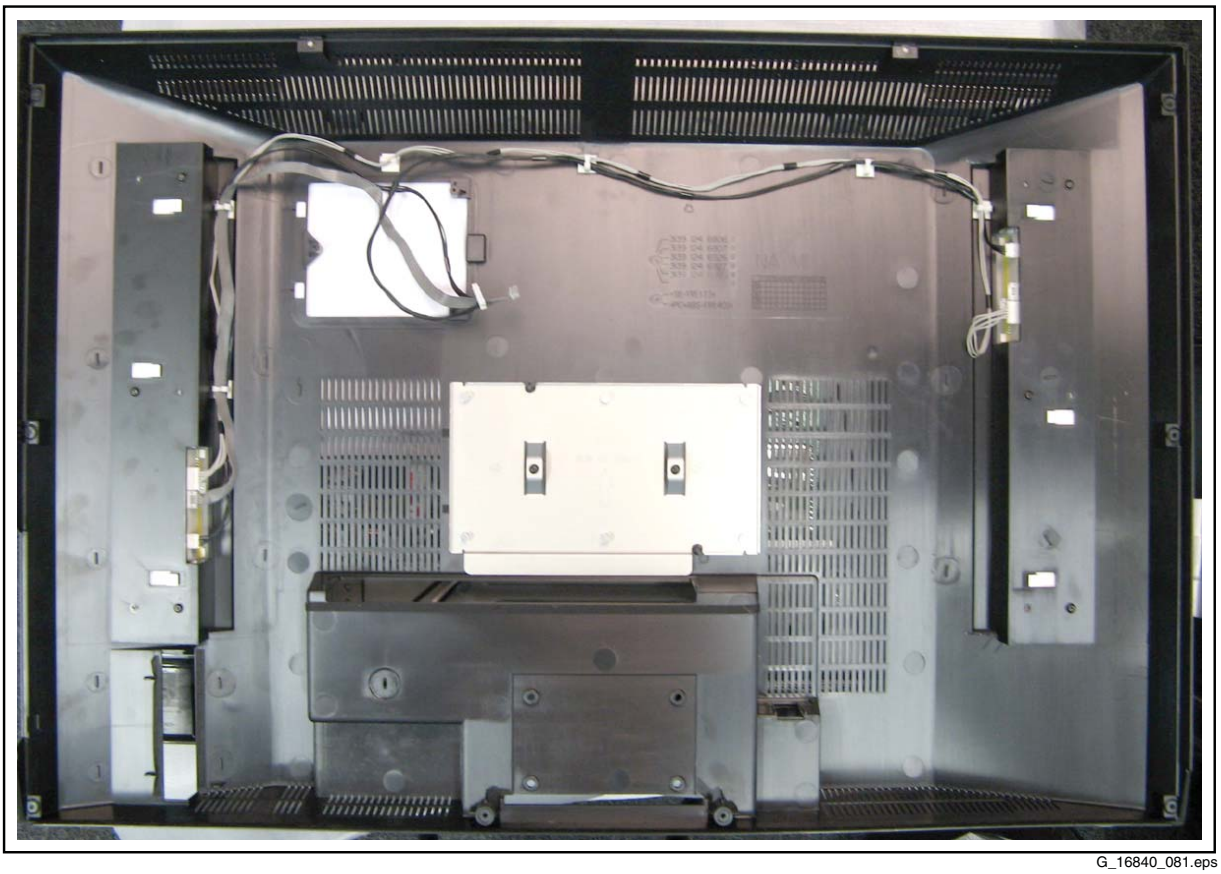

G_16840_081.eps
010207

Figure 4-5 Cable dressing rear cover for models with AmbiLight (32-inch model)

4.2 Service Positions

For easy servicing of this set, there are a few possibilities created:

- The buffers from the packaging.
- Foam bars (created for Service).
- Aluminium service stands (created for Service).

4.2.1 Foam Bars

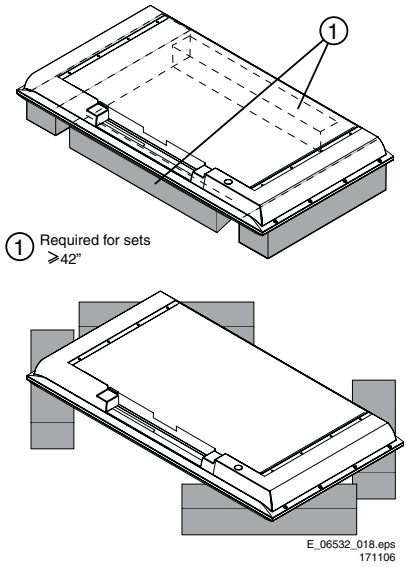

Figure 4-6 Foam bars

The foam bars (order code 3122 785 90580 for two pieces) can be used for all types and sizes of Flat TVs. See figure “Foam bars” for details. Sets with a display of 42” and larger, require **four** foam bars [1]. Ensure that the foam bars are always supporting the cabinet and **never** only the display. **Caution:** Failure to follow these guidelines can seriously damage the display!
By laying the TV face down on the (ESD protective) foam bars, a stable situation is created to perform measurements and alignments. By placing a mirror under the TV, you can monitor the screen.

4.2.2 Aluminium Stands

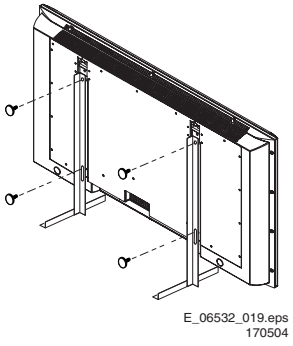

Figure 4-7 Aluminium stands (drawing of MkI)

The new MkII aluminium stands (not on drawing) with order code 3122 785 90690, can also be used to do measurements, alignments, and duration tests. The stands can be (dis)mounted quick and easy by means of sliding them in/out the "mushrooms" (not valid for all models!). The new stands are backwards compatible with the earlier models.
Important: For (older) FTV sets without these "mushrooms", it is obligatory to use the provided screws, otherwise it is possible to damage the monitor inside!

4.3 Assy/Panel Removal

4.3.1 Rear Cover

Warning: Disconnect the mains power cord before you remove the rear cover.

1. Place the TV set upside down on a table top, using the foam bars (see part "Service Position").
2. Remove screws [1] and the stand.
3. Remove screws [2] and the small “Service door”.
4. Unplug connectors [3]. See figure “Rear cover removal 2”
5. Remove screws [4] and the rear cover.

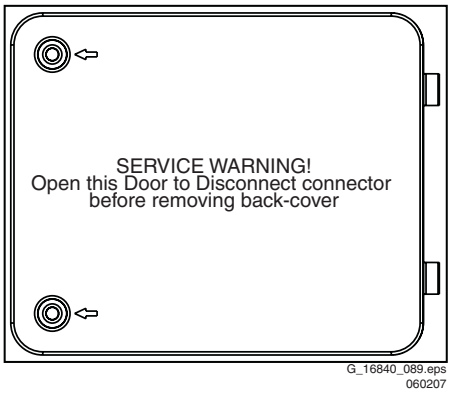

Figure 4-8 Service door (example)

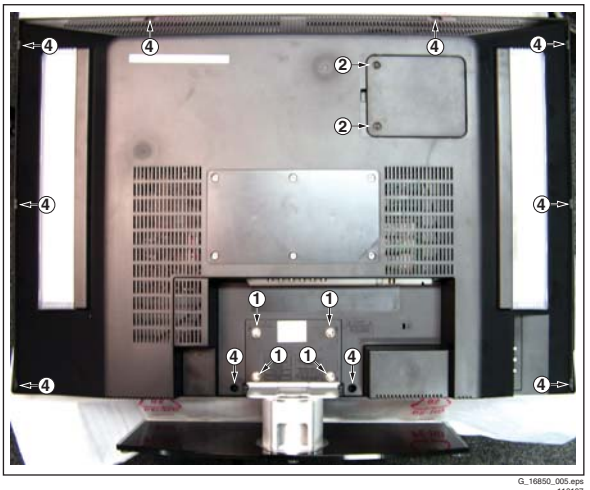

Figure 4-9 Rear cover removal [1/2]

Figure 4-10 Rear cover removal [2/2]

4.3.2 AmbiLight Module

1. Remove the rear cover, as described earlier.
2. Unplug connectors [1].
3. Remove screws [2].
4. Slide the module to the left or the right, depending on the position of the module, and remove it from the rear cover.

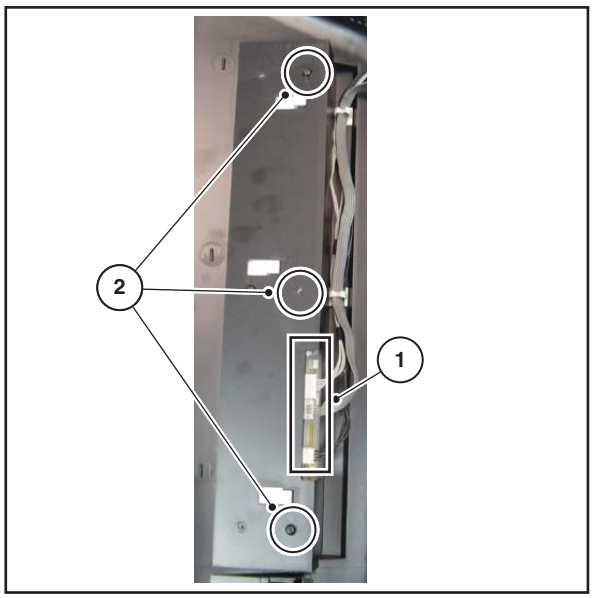

G_16840_088.eps
050207

Figure 4-11 AmbiLight unit

4.3.3 Keyboard Control Panel

1. Remove the rear cover, as described earlier.
2. Refer to fig. “Keyboard control panel“ below.
3. Remove the T10 Parker screws [1].
4. Unplug connector [2].
5. Remove the unit.
6. Release clips [3] and remove the board.

When defective, replace the whole unit.

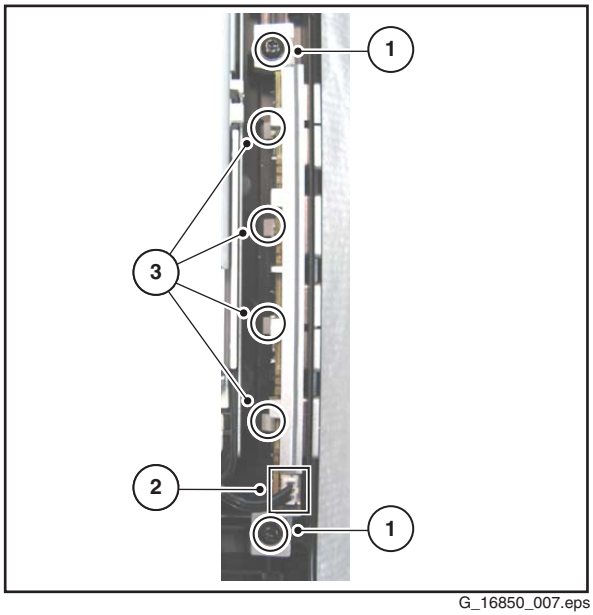

G_16850_007.eps
090207

Figure 4-12 Keyboard control panel

4.3.4 Side I/O Panel

1. Remove the rear cover, as described earlier.
2. Unplug connector [a].
3. Remove screws [b] and remove the complete module. One of the screws is T10 tapping, the other one is T10 Parker. See fig. “Side I/O module”.
4. Remove T10 Parker screw [c]. See fig. “Side I/O panel 1”.
5. Push catch [d] (located at the underside of the bracket) and slide the unit to the right from its bracket [e]. See fig. “Side I/O panel 2”.
6. To remove the PWB from its bracket, you have to lift the catch [f] located on top of the headphone connector. At the same time, slide the PWB out of its bracket [g]. See fig. “Side I/O panel 3”.

When defective, replace the whole unit.

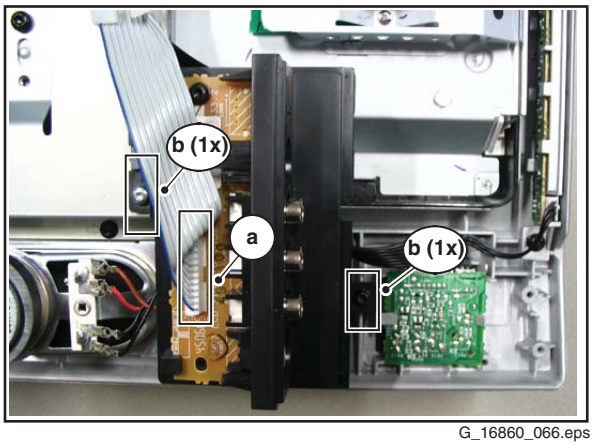

G_16860_066.eps
010207

Figure 4-13 Side I/O module

G_16860_075.eps
010207

Figure 4-14 Side I/O panel [1/3] top side

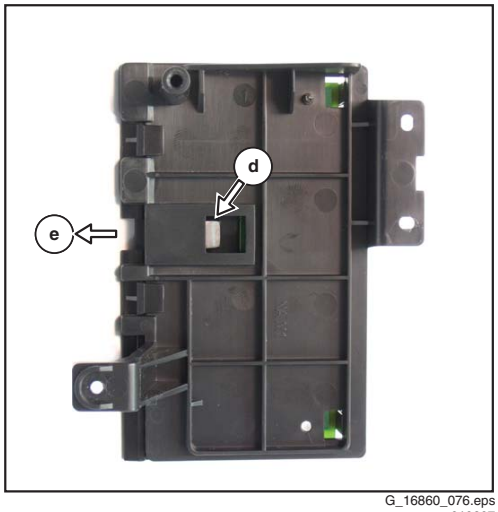

G_16860_076.eps
010207

Figure 4-15 Side I/O panel [2/3] bottom side

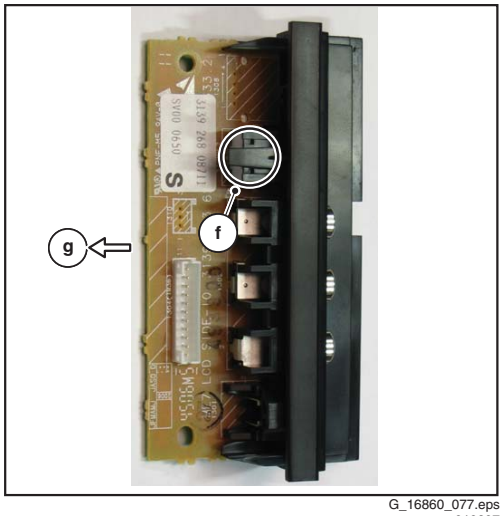

G_16860_077.eps
010207

Figure 4-16 Side I/O panel [3/3]

4.3.5 IR/LED Panel

1. Remove the rear cover, as described earlier.
2. Refer to fig. “IR/LED panel“ below.
3. Unplug connector(s) [1].
4. Release clip [2] and remove the board.

When defective, replace the whole unit.

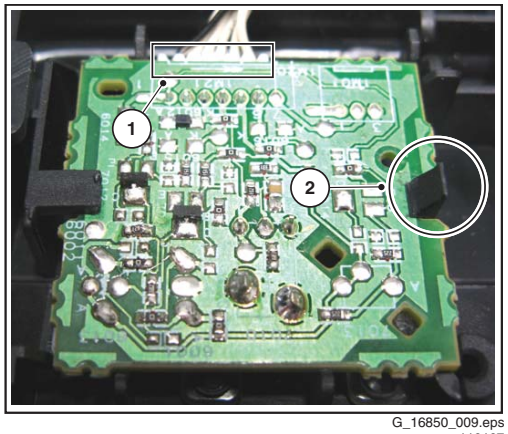

G_16850_009.eps
110107

Figure 4-17 IR/LED panel

4.3.6 Mid-range Speakers

1. Remove the rear cover, as described earlier.
2. Refer to fig. “Mid-range speakers“ below.
3. Unplug connectors [1].
4. Remove T10 Parker screws [2].

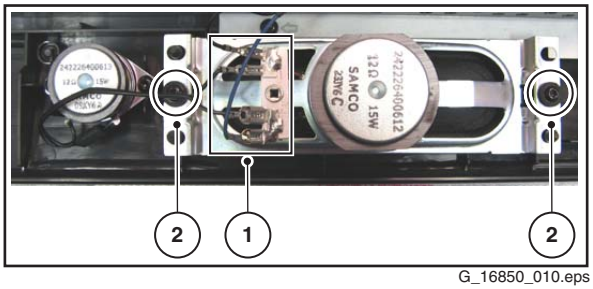

G_16850_010.eps
110107

Figure 4-18 Mid-range speakers

4.3.7 Tweeters

1. Remove the rear cover, as described earlier.
2. Refer to fig. “Tweeters” below.
3. Unplug connectors [1].
4. Remove T10 Parker screws [2].

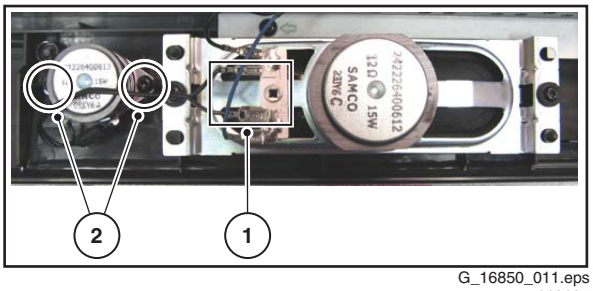

G_16850_011.eps
110107

Figure 4-19 Tweeters

4.3.8 Power Supply Board

1. Remove the rear cover, as described earlier.
2. Unplug connectors [1].
3. Remove the fixation screws [2].
4. Take the board out of its brackets (it hinges on the right side).

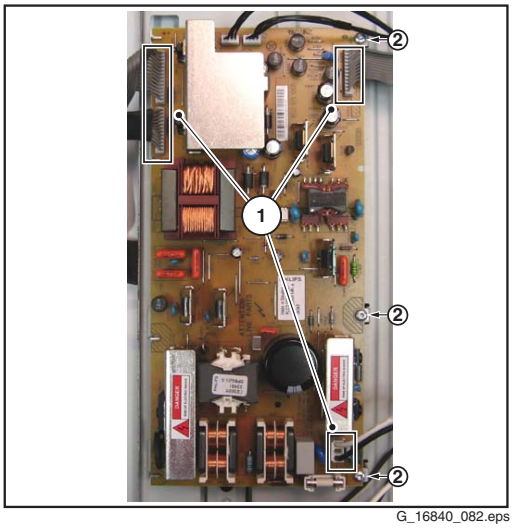

G_16840_082.eps
310107

Figure 4-20 Power supply board

4.3.9 Interconnection Board

1. Remove the rear cover, as described earlier.
2. Unplug connectors [1].
3. Carefully unplug the LVDS connectors [2]. Be careful as they are very fragile.
4. Remove the fixation screws [3].

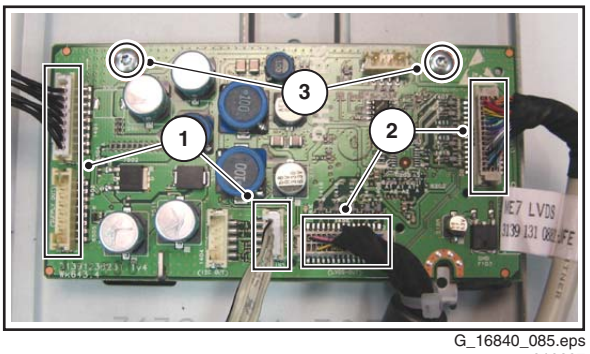

G_16840_085.eps
010207

Figure 4-21 Interconnection board

4.3.10 Small Signal Board (SSB)

1. Unplug connectors [1].
2. Carefully unplug the LVDS connector [2]. Be careful as it is very fragile.
3. Remove the fixation screws [3] from the connector plate.
4. Remove the fixation screws [4].

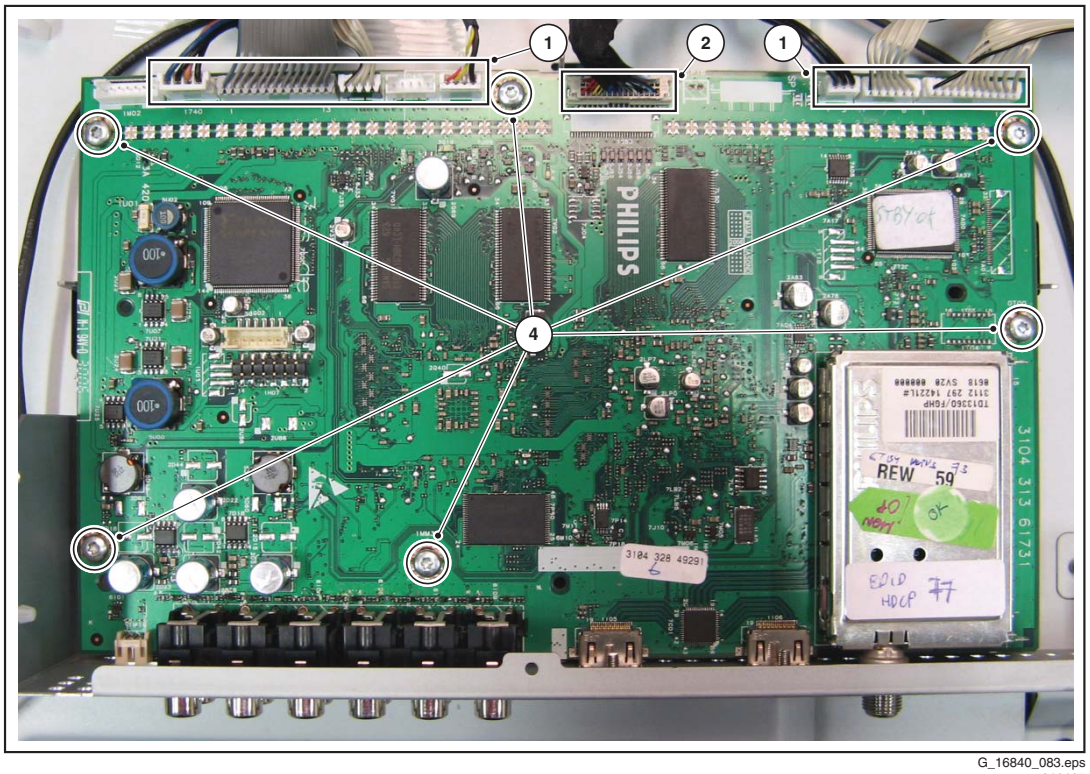

G_16840_083.eps
310107

Figure 4-22 Small Signal Board 1/2

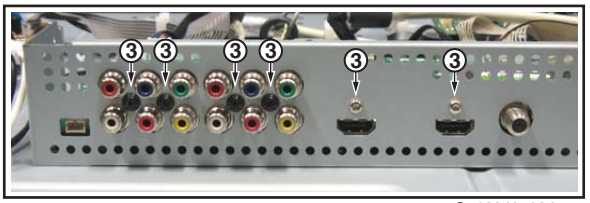

G_16840_084.eps
010207

Figure 4-23 Small Signal Board 2/2

4.3.11 LCD Panel

1. Remove the rear cover, as described earlier.
2. Refer to fig. “LCD panel“ below.
3. Unplug the connectors [1] from the power supply, the LED/ IR board, and the Side I/O board.
4. Unplug the outer connectors [2] from the mid-range loudspeakers.
5. **Do NOT forget** to unplug the LVDS connector [3] from the SSB. **Important:** Be careful, as this is a very fragile connector!
6. Remove fixation screws [4] and put the complete Side I/O unit on the central sub-frame [6].
7. Remove fixation screws [5] and lift the complete central sub-frame [6] (incl. the PSU, SSB, and Side I/O boards and wiring) from the set.
8. Lift the LCD panel [7] from the front cabinet.

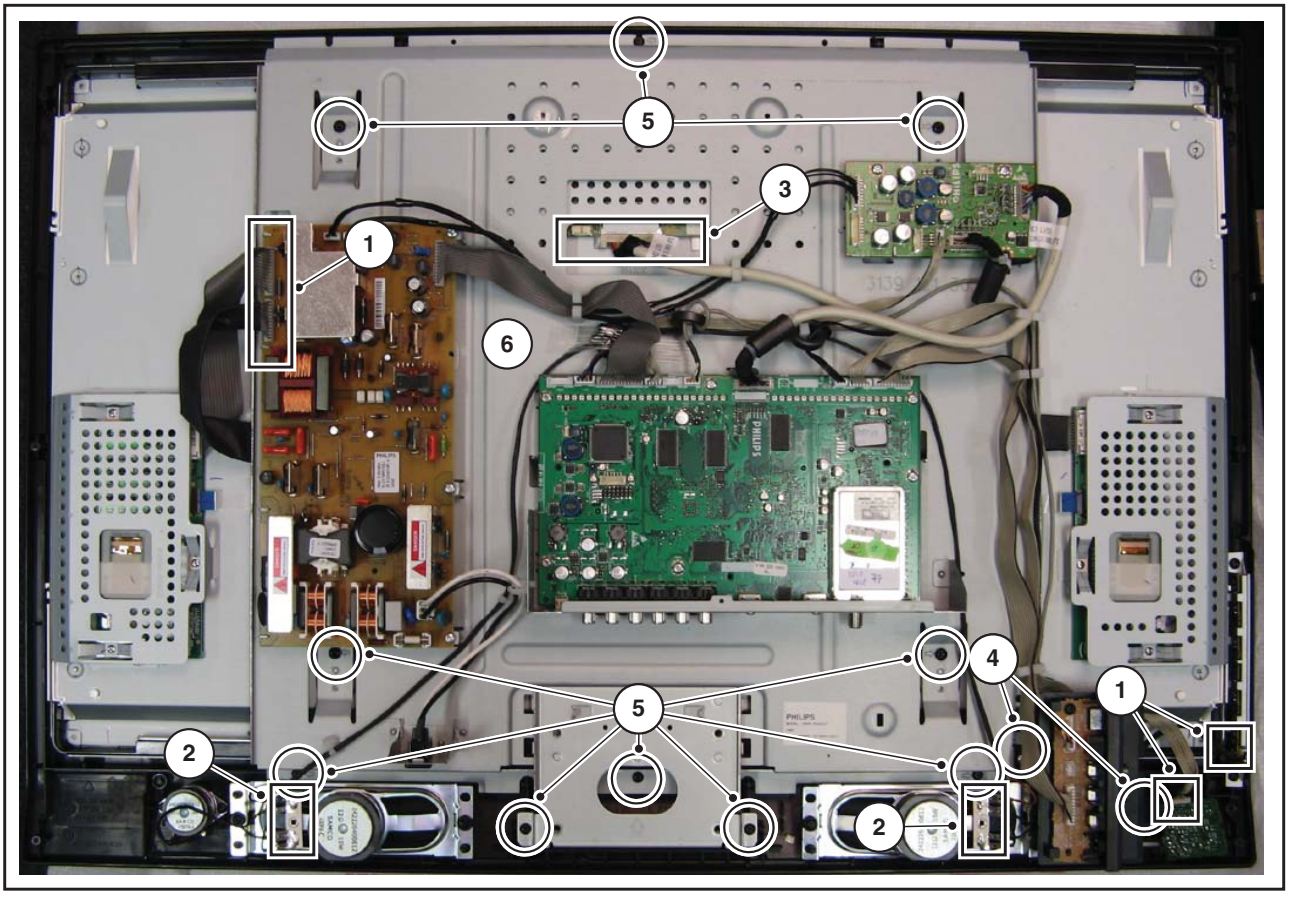

G_16840_087.eps
050207

Figure 4-24 LCD panel [1/2]

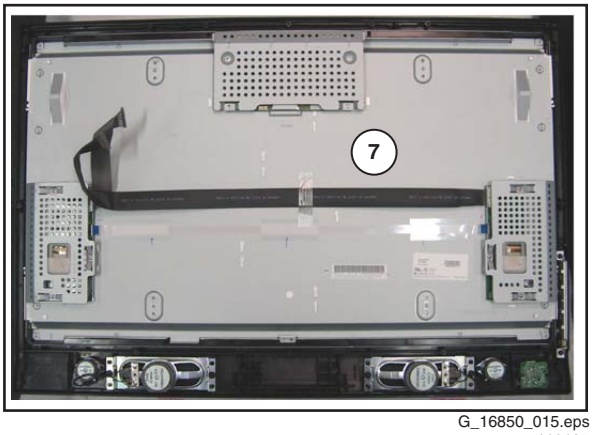

G_16850_015.eps
110107

Figure 4-25 LCD panel [2/2]

4.4 Set Re-assembly

To re-assemble the whole set, execute all processes in reverse order.

Notes:

- While re-assembling, make sure that all cables are placed and connected in their original position. See figure "Cable dressing".
- Pay special attention not to damage the EMC foams. Ensure that EMC foams are mounted correctly (one is located above the LVDS connector on the display, between the LCD display and the metal sub-frame).

5. Service Modes, Error Codes, and Fault Finding

Index of this chapter:

5.1 Test Points
5.2 Service Modes
5.3 Stepwise Start-up
5.4 Service Tools
5.5 Error Codes
5.6 The Blinking LED Procedure
5.7 Protections
5.8 Fault Finding and Repair Tips
5.9 Software Upgrading

5.1 Test Points

As most signals are digital, it will be almost impossible to measure waveforms with a standard oscilloscope. Therefore, waveforms are not given in this manual. Several key ICs are capable of generating test patterns, which can be controlled via ComPair. In this way it is possible to determine which part is defective.

Perform measurements under the following conditions:
- Service Default Mode.
- Video: Color bar signal.
- Audio: 3 kHz left, 1 kHz right.

5.2 Service Modes

Service Default Mode (SDM) and Service Alignment Mode (SAM) offer several features for the service technician, while the Customer Service Mode (CSM) is used for communication between a Customer Helpdesk and a customer.

There is also the option of using ComPair, a hardware interface between a computer (see requirements below) and the TV chassis. It offers the ability of structured troubleshooting, test pattern generation, error code reading, software version readout, and software upgrading.

Minimum requirements for ComPair: a Pentium processor, Windows 95/98, and a CD-ROM drive (see also paragraph “ComPair”).

Remark: as the Hotel Mode is a User Mode, rather than a Service Mode, we have put the description in Chapter 3, Directions for Use.

5.2.1 Service Default Mode (SDM)

Purpose
- To create a pre-defined setting, to get the same measurement results as given in this manual.
- To override SW protections (only applicable for protections detected by stand-by processor) and make the TV start up to the step just before protection (a sort of automatic stepwise start up). See paragraph “Stepwise Start Up”.
- To start the blinking LED procedure (not valid in protection mode).

Specifications

Table 5-1 SDM default settings

Region	Freq. (MHz)	Default system
Europe, AP-PAL/Multi	475.25	PAL B/G
NAFTA, AP-NTSC, LATAM	61.25 (ch. 3)	NTSC M

- Tuning frequency 61.25 MHz for NTSC: The TV shall tune to physical channel 3 only if channel 3 is an analog channel or if there is no channel 3 installed in the channel map. If there is a digital channel installed in channel 3, then the frequency to which the set will tune, would be as specified in the channel map and could be different from the one corresponding to the physical channel 3.
- All picture settings at 50% (brightness, color, contrast).
- All sound settings at 50%, except volume at 25%.
- All service-unfriendly modes (if present) are disabled, like:
  - (Sleep) timer.
  - Child/parental lock.
  - Picture mute (blue mute or black mute).
  - Automatic volume levelling (AVL).
  - Auto switch "OFF" (when no video signal was received for 10 minutes).
  - Skip/blank of non-favorite pre-sets.
  - Smart modes.
  - Auto store of personal presets.
  - Auto user menu time-out.

How to Activate SDM

Use one of the following methods:
- Use the standard RC-transmitter and key in the code “062596”, directly followed by the “MENU” button.
  Note: It is possible that, together with the SDM, the main menu will appear. To switch it "OFF", push the “MENU” button again.
- Short for a moment the two solder pads [1] on the SSB, with the indication “SDM”. They are located on top of the SSB. Activation can be performed in all modes, except when the set has a problem with the Stand-by Processor. See figure “SDM and SPI service pads”.

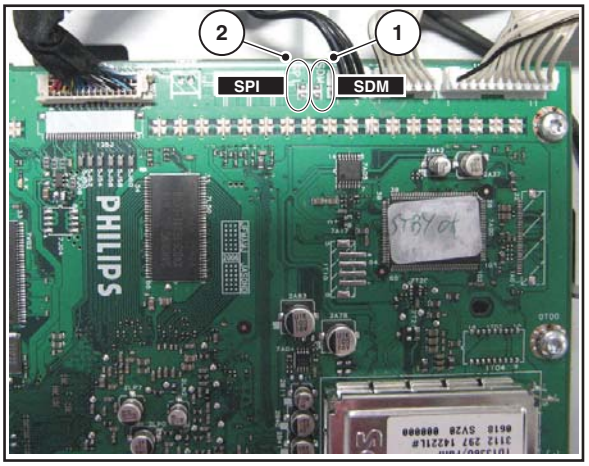

G_16840_014.eps
030107

Figure 5-1 SDM and SPI service pads

After activating this mode, “SDM” will appear in the upper right corner of the screen (if you have picture).

How to Navigate

When you press the “MENU” button on the RC transmitter, the set will toggle between the SDM and the normal user menu (with the SDM mode still active in the background).

How to Exit SDM

Use one of the following methods:
- Switch the set to STAND-BY via the RC transmitter.
- Via a standard customer RC transmitter: key in “00”-sequence.

5.2.2 Service Alignment Mode (SAM)

Purpose
- To perform (software) alignments.
- To change option settings.
- To easily identify the used software version.
- To view operation hours.
- To display (or clear) the error code buffer.

How to Activate SAM
Via a standard RC transmitter: key in the code “062596” directly followed by the “INFO” button. After activating SAM with this method a service warning will appear on the screen, you can continue by pressing the red button on the RC.

Contents of SAM:
- **Hardware Info.**
  - **A. VIPER SW Version.** Displays the software version of the VIPER software (main software) (**example:** EJ30U_0.77.0.0 = AAAAB_X.Y.W.Z_NNNNN).
    - **AAAA**= the chassis name.
    - **B**= the region: A= AP, E= EU, L= Latam, U = US.
    - **X.Y.W.Z**= the software version, where X is the main version number (different numbers are not compatible with one another) and Y is the sub version number (a higher number is always compatible with a lower number). The last two digits are used for development reasons only, so they will always be zero in official releases.
    - **NNNNN**= last five digits of 12nc code of the software.
  - **B. SBY PROC Version.** Displays the software version of the stand-by processor.
  - **C. Production Code**. Displays the production code of the TV, this is the serial number as printed on the back of the TV set. Note that if an NVM is replaced or is initialized after corruption, this production code has to be re-written to NVM. ComPair will foresee in a possibility to do this.
- **Operation Hours.** Displays the accumulated total of operation hours (not the stand-by hours). Every time the TV is switched "ON/OFF", 0.5 hours is added to this number.
- **Errors.** (Followed by maximal 10 errors). The most recent error is displayed at the upper left (for an error explanation see paragraph “Error Codes”).
- **Defective Module.** Here the module that generates the error is displayed. If there are multiple errors in the buffer, which are not all generated by a single module, there is probably another defect. It will then display the message “UNKNOWN” here.
- **Reset Error Buffer.** When you press “cursor right” and then the “OK” button, the error buffer is reset.
- **Alignments.** This will activate the “ALIGNMENTS” sub-menu.
- **Dealer Options.** Extra features for the dealers.
- **Options.** Extra features for Service.
- **Initialize NVM.** When an NVM was corrupted (or replaced) in the former EMG based chassis, the microprocessor replaces the content with default data (to assure that the set can operate). However, all preferences and alignment values are gone now, and option numbers are not correct. Therefore, this was a very drastic way. In this chassis, the procedure is implemented in another way: The moment the processor recognizes a corrupted NVM, the “initialize NVM” line will be highlighted. Now, you can do two things (dependent of the service instructions at that moment):
  - Save the content of the NVM via ComPair for development analysis, **before** initializing. This will give the Service department an extra possibility for diagnosis (e.g. when Development asks for this).
  - Initialize the NVM (same as in the past, however now it happens conscious).

Note: When you have a corrupted NVM, or you have replaced the NVM, there is a high possibility that you will not have picture any more because your display option is not correct. So, before you can initialize your NVM via the SAM, you need to have picture and therefore you need the correct display option. To adapt this option, you can use ComPair (the correct HEX values for the options can be found in the table below) or a method via a standard RC (described below).

Changing the display option via a standard RC:
Key in the code “062598” directly followed by the “MENU” button and by “XXX” (where XXX is the 3 digit decimal display option code as mentioned in the first column of the next table). Make sure to key in all three digits, also the leading zero’s. If the above action is successful, the front LED will go out as an indication that the RC sequence was correct. After the display option is changed in the NVM, the TV will go to the Stand-by mode. If the NVM was corrupted or empty before this action, it will be initialized first (loaded with default values). This initializing can take up to 20 seconds.

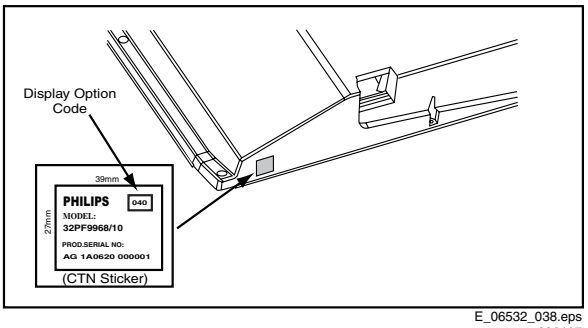

E_06532_038.eps
290107

Figure 5-2 Location of Display Option Code sticker

Display option	HEX	Display type	Brand	SIZE	Full HD	Clear LCD	Resolution vertical	Resolution horizontal	Type number	12 NC
000	00	PDP	SDI	42			768p	1024	S42AX-YD01(PP42AX-007A)	9322 225 38682
001	01	PDP	SDI	50			768p	1366	S50HW-XD03	9322 215 26682
002	02	PDP	FHP	42			1024i	1024	FPF42C128128UC-52 (A1)	9322 212 78682
003	03	LCD	LPL	30			768p	1280	LC300W01-A3P7	9322 198 00682
004	04	LCD	LPL	37			768p	1366	LC370W01-A6	9322 220 87682
005	05	LCD	LPL	42			768p	1366	LC420W02-A6	9322 226 39682
006	06	LCD	Sharp	32			768p	1366	LQ315T3LZ13 (ASV1) LQ315T3LZ23 (ASV2.2)(5Vtcon) LQ315T3LZ23 (ASV2.2)(12Vtcon)	9322 209 35682 9322 226 58682 9322 226 16682
007	07	PDP	SDI	42			480p	852	S42SD-YD05 (V3)	9322 215 27682
008	08	PDP	FHP	37			1024i	1024	FPF37C128128UB-72	9322 217 56682
009	09	LCOS XION					720p	1280	n.a.	n.a.
010	0A	LCD	AUO	30			768p	1280	T296XW01 T296XW01V2 T296XW01V3	9322 206 49682 9322 219 45682 9322 213 33682
011	0B	LCD	LPL	32			768p	1366	LC320W01-A6K1	9322 217 44682
012	0C	LCD	AUO	32			768p	1366	T315XW01V5	9322 231 69682
013	0D	LCD	Sharp	37			768p	1366	LQ370T3LZ21 (ASV2) LQ370T3LZ44 (ASV2.2)	?
014	0E	LCD	LPL	42	X		1080p	1920	LC420WU1-SL01	9322 228 99682
015	0F	PDP	SDI	37			480p	852	S37SD-YD02	9322 217 39682
016	10	PDP	FHP	37			1080i	1024	not used	not used
017	11	PDP	FHP	42			1080i	1024	FPF42C128135UA-52	9322 235 43682
018	12	PDP	FHP	55			768p	1366	not used	not used
019	13	LCOS VENUS					720p	1280	n.a.	n.a.
020	14	LCOS VENUS			X		1080p	1920	n.a.	n.a.
021	15	LCD	LPL	26			768p	1366	LC260WX2-SL01	9322 221 01682
022	16	LCD	LPL	32		SC BL	768p	1366	LC320WX2-SL01	9322 241 46682
023	17	PDP	LGE	42			480p	852	not used	not used
024	18	PDP	SDI	42			480p	852	S42SD-YD07(PP42SD-015A) (V4) S42SD-YD07(PP42SD-015B) (V4) S42SD-YD07(PP42SD-015F) (V4)	9322 226 37682 9322 226 96682 9322 233 81682
025	19	PDP	SDI	42			768p	1024	S42AX-YD01(PP42AX-007A) (V4) S42AX-YD01(PP42AX-008A) (V4) S42AX-YD01(PP42AX-008B) (V4) S42AX-YD02(PP42AX-009A) (W1) S42AX-YD02 (PS-425-PHN) (W1)	9322 225 38682 9322 226 95682 9322 233 80682 9322 240 08682 9322 242 85682
026	1A	PDP	FHP	42			1024i	1024	FPF42C128128UD-51 (A2)	not used
027	1B	PDP	SDI	50			768p	1366	S50HW-XD04(PP50HW-005A) (V4) S50HW-XD04(PP50HW-005B) (V4) S50HW-XD04(PP50HW-005E) (V4) S50HW-YD01(PP50HW-010A) (W1)	9322 226 54682 9322 226 97682 9322 233 79682 9322 240 25682
028	1C	LCD	Sharp	37	X		1080p	1920	LQ370D3LZ13 (ASV2.2)	9322 228 48682
029	1D	LCD	AUO	32			768p	1366	T315XW01-V3	not used
030	1E	LCD	Sharp	37	X	BDI	1080p	1920	LW370D3LZ1x (ASV 3 first samples)	not used
031	1F	LCD	Sharp	37	X	BDI	1080p	1920	LK370D3LZ33 (ASV 3)	9322 242 22682
032	20	LCD	LPL	20			768p	1366	LC200WX1-SL01	9322 222 90682
033	21	LCD	QDI	23			768p	1366	QD23HL02 REV01 QD23HL02 REV01(03)	9322 223 91682 9322 232 69682
034	22	ECO PTV		51			1080i	1366	?	
035	23	ECO PTV		55			1080i	1366	?	
036	24	ECO PTV		61			1080i	1366	?	
037	25	PDP	FHP	42			1024I	1024	FPF42C128135UA-52 (A3)	9322 235 43682
038	26	DLP		50			720p	1280	?	
039	27	DLP		60			720p	1280	?	
040	28	LCD	Sharp	32			768p	1366	LK315T3LZ43 (ASV 2.3)	9322 235 32682
041	29	LCD	LPL	42		SC BL	768p	1366	LC420WX2-SLA1	9322 240 80682
042	2A	PDP	SDI	63			768p	1366	S63HW-XD05(1H341W)	9322 246 18682
043	2B	LCD	Sharp	37		BDI	768p	1366	LK370T3LZ63 (ASV 3)	9322 247 94682
044	2C	LCD	Sharp	37			768p	1366	LK370T3LZ53 (ASV 2.3)	9322 235 83682
045	2D	LCD	LPL	26			768p	1366	LC260WX2-SLB2	9322 234 13682
046	2E	LCD	LPL	32			768p	1366	LC320W01-SL06	9322 230 03682
047	2F	LCD	LPL	42			768p	1366	LC420W02-SLB1	9322 234 12682
048	30	LCD	QDI	26			768p	1366	QD26HL02-REV01 QD26HL02-REV02	9322 227 29682 9322 235 05682
049	31	LCD	AUO	26			768p	1366	T260XW02V4	9322 231 90682
050	32	LCD	AUO	32			768p	1366	T315XW01V9	9322 231 89682
051	33	LCD	AUO	37			768p	1366	T370XW01V1	9322 233 78682
052	34	LCD	AUO	32			768p	1366	T315XW02V5	not used
053	35	LCD	LPL	37			768p	1366	LC370WX1-SL04	9322 233 19682
054	36	PDP	LGE	42			768p	1024	PDP42X3S000 PDP42X3V000	9322 245 29682 9322 246 93682
055	37	LCD	LPL	42	X		1080p	1920	LC420WU2-SLA1	9322 246 84682
056	38	LCD	LPL	47	X		1080p	1920	LC470WU1-SLC2	9322 248 50682
057	39	LCD	LPL	42			768p	1366	LC420WX3-SLA2	under development
058	3A	LCD	LPL	42	X	SC BL	1080p	1920	LC420WU5-SLA1	under development
059	3B									reserved
060	3C	LCD	Sharp	37	X	DFI	1080p	1920	LK370D3LZXX	under development
061	3D	LCD	LPL	42		DFI	768p	1366	FMB	reserved
062	3E	LCD	LPL	32		DFI	768p	1366	WX5 SLB1	under development
063	3F	LCD	LPL	47	X	DFI	1080p	1920	WCG	under development

E_06532_030a.eps
080207

Figure 5-3 Display option code overview [1/2] (for all Philips FTV chassis)

Display option	HEX	Display type	Brand	SIZE	Full HD	Clear LCD	Resolution vertical	Resolution horizontal	Type number	12 NC
064	40									reserved
065	41									reserved
066	42	PDP	SDI	63	x		1080p	1920	S63HW-YD02 (W2)	under development
067	43	LCD	AUO	26			768p	1366	T260XW03V1	under development
068	44	LCD	CMO	26			768p	1366	V260B1-L03	9322 249 37682
069	45	LCD	CMO	32			768p	1366	V315B1 L05	9322 248 65682
070	46	LCD	CPT	32			768p	1366	CLLAA320WB02P	9322 245 31682
071	47	LCD	LPL	37			768p	1366	LC370WX1-SLB1	9322 246 96682
072	48	LCD	AUO	37			768p	1366	T370XW02V5	9322 249 77682
073	49	LCD	LPL	42			768p	1366	LC420WX3-SLA1	9322 246 97682
074	4A	LCD	LPL	42		DFI	768p	1366	LC420WX4-SLA1	under development
075	4B	LCD	Sharp	52	X	DFI	1080p	1920	LK520D3LZ1X	under development
076	4C	LCD	AUO	42			768p	1366	T420XW01V8	9322 249 10682
077	4D	LCD	AUO	42		BDI	768p	1366	T420XW	under development
078	4E	LCD	AUO	42	X		1080P	1920	T420HW01 V0	under development
079	4F	LCD	CMO	42		BDI	768p	1366	V420B1	under development
080	50	LCD	CMO	42	X		1080P	1920	V420H1	under development
081	51	LCD	LPL	47	X		1080P	1920	LC470WU4-SLA2	under development
082	52	LCD	AUO	47	X		1080P	1920	T470HW01 V0	under development
083	53	PDP	SDI	42			768p	1024	S42AX-YD04(PS-426-PH)	9322 246 76682
084	54	PDP	LGE	42			768p	1024	HD X4	under development
085	55	PDP	SDI	50			768p	1366	S50HW-YD05(PS-506-PH)	9322 246 81682
086	56	PDP	LGE	50			768p	1366	HD X4	under development
087	57	LCD	Sharp	37	X	BDI	1080p	1920	LK370D3LZ43 (ASV3.0)	9322 248 28682
088	58	LCD	Sharp	37		BDI	768P	1366	(ASV2,3 VE1)	under development
089	59	LCD	AUO	42			768p	1366	T420XW01V5	under development
090	5A	LCD	AUO	26			768p	1366	T260XW03V1	under development
091	5B	LCD	AUO	32			768P	1366	T315XW02VD	9322 249 06682
092	5C	LCD	LPL	42			768p	1366	LC420WX2-SLA1	9322 240 80682
093	5D	LCD	LPL	42	X		1080p	1920	LC420WU2-SLA1	9322 246 84682
094	5E	PDP	SDI	63	x		1080p	1920	S63HW-YD02 (W2) used with JIP panel	under development
095	5F	LCD	Sharp	37	X		1080p	1920	LK370D3LZ23	9322 249 96682
096	60	LCD	LPL	42	X	SC BL DFI	1080p	1920	TBD	under development
097	61	LCD	LPL	47	X	SC BL	1080p	1920	LC470WU6 - SLA1	under development
098	62	LCD	Sharp	52	X		1080p	1920	LK520D3LZ1X	under development
099	63									reserved
100	64	LCD		42	X		1080p	1920	3D	under development
101	65									reserved
102	66	LCD	Sharp	32		DFI	768p	1366	LK315T3LZ53	under development
103	67	LCD	LPL	20			480p	640	LC201V02-SDB1	9322 242 65682
104	68	LCD	AUO	20			600p	800	A201SN02 V5	not in ECM2
105	69	LCD	CMO	19			900p	1440	TPM190A1-L02	9965 000 43654
106	6A	LCD	AUO	23			768p	1366	T230XW01V3	9322 249 79682
107	6B	LCD	LPL	42			768P	1366	LC420WX5-SLD1	9322 249 09682

E_06532_030b.eps
080207

Figure 5-4 Display option code overview [2/2] (for all Philips FTV chassis)

- **Store.** All options and alignments are stored when pressing “cursor right” and then the “OK” button
- **SW Maintenance.**
  - **SW Events.** Not useful for service purposes. In case of specific software problems, the development department can ask for this info.
  - **HW Events.** Not functional at the moment this manual is released, description will be published in an update manual if the function becomes available.
- **Upload to USB.** Write the channel list and the settings to a USB device.
- **Download from USB.** Retrieve the channel list and the settings from a USB device.

How to Navigate

- In SAM, you can select the menu items with the “CURSOR UP/DOWN” key on the RC transmitter. The selected item will be highlighted. When not all menu items fit on the screen, move the “CURSOR UP/DOWN” key to display the next/previous menu items.
- With the “CURSOR LEFT/RIGHT” keys, it is possible to:
  - (De)activate the selected menu item.
  - (De)activate the selected submenu.

How to Exit SAM

Use one of the following methods:

- Press the “MENU” button on the RC transmitter.
- Switch the set to STAND-BY via the RC transmitter.

Note: As long as SAM is activated, it is not possible to change a channel. This could hamper the White Point alignments because you cannot choose your channel/frequency any more. Workaround: after you have sent the RC code “062596 INFO” you will see the service-warning screen, and in this stage it is still possible to change the channel (so before pressing the “OK” button).

5.2.3 Customer Service Mode (CSM)

Purpose

When a customer is having problems with his TV-set, he can call his dealer or the Customer Helpdesk. The service technician can then ask the customer to activate the CSM, in order to identify the status of the set. Now, the service technician can judge the severity of the complaint. In many cases, he can advise the customer how to solve the problem, or he can decide if it is necessary to visit the customer.
The CSM is a read only mode; therefore, modifications in this mode are not possible.

How to Activate CSM

Key in the code “123654” via the standard RC transmitter.

Note: Activation of the CSM is only possible if there is no (user) menu on the screen!

How to Navigate

By means of the “CURSOR-DOWN/UP” knob on the RC transmitter, you can navigate through the menus.

Contents of CSM

- **CSM 1**
  - **1.3. Set type:** Model number of the set. This information is very helpful for a helpdesk/workshop as reference for further diagnosis. In this way, it is not necessary for the customer to look at the rear of the TV-set. (*)
  - **1.4. Production Code:** Displays the production code (the serial number) of the TV. (*)
  - **1.5. Code 1:** Gives the latest five errors of the error buffer. As soon as the built-in diagnose software has detected an error, the buffer is adapted. The last occurred error is displayed on the leftmost position. Each error code is displayed as a 2-digit number. When less than 10 errors occur, the rest of the buffer is empty (00). See also paragraph Error Codes for a description.
  - **1.6. Code 2:** Displays the 2nd part of the error buffer. See also paragraph Error Codes for a description.
  - **1.7. Options 1:** Gives the option codes of option group 1 as set in SAM (Service Alignment Mode).
  - **1.8. Options 2:** Gives the option codes of option group 2 as set in SAM (Service Alignment Mode).
  - **1.13. 12NC SSB:** Indication of the SSB order code. (*)
  - **1.13. Install date:** This shall be filled in after time extraction (triggered by disabling of virgin mode, so first time customer does channel installation). Time extraction is done via, teletext for Europe, PBS Public Broadcast Channels for US. This, to determine exactly the garanty period for call centers.

- **CSM 2:**
  - **2.2. Pixel Plus:** Gives an indication if PixelPlus is set “ON” or “OFF”.
  - **2.4. DNR.** Gives the selected DNR setting (Dynamic Noise Reduction), “OFF”, “MINIMUM”, “MEDIUM”, or “MAXIMUM”. Change via “MENU”, “TV”, “PICTURE”, “DNR”
  - **2.5. Noise Figure.** Gives the noise ratio for the selected transmitter. This value can vary from 0 (good signal) to 127 (average signal) and to 255 (bad signal). For some software versions, the noise figure will only be valid when “Active Control” is set to “medium” or “maximum” before activating CSM.

- **CSM 3:**
  - **3.1. Headphone Volume:** Gives the last status of the headphone volume, as set by the customer. The value can vary from 0 (volume is minimum) to 100 (volume is maximum). Change via ”MENU”, “TV”, “SOUND”, “HEADPHONE VOLUME”.
  - **3.2. Dolby:** Indicates whether the received transmitter transmits Dolby sound (“ON”) or not (“OFF”). Attention: The presence of Dolby can only be tested by the software on the Dolby Signaling bit. If a Dolby transmission is received without a Dolby Signaling bit, this indicator will show “OFF” even though a Dolby transmission is received.
  - **3.3. Surround Mode:** Indicates the by the customer selected sound mode (or automatically chosen mode). Possible values are “STEREO” and “VIRTUAL DOLBY SURROUND”. Change via “MENU”, “TV”, “SOUND”, “SOUND MODE”. It can also have been selected automatically by signaling bits (internal software).
  - **3.4. Center Input:** Not applicable.
  - **3.5. Audio System:** Gives information about the audible audio system. Possible values are “Stereo”, ”Mono”, “Mono selected”, “Analog In: No Dig. Audio”, “Dolby Digital 1+1”, “Dolby Digital 1/0”, “Dolby Digital 2/0”, “Dolby Digital 2/1”, “Dolby Digital 2/2”, “Dolby Digital 3/0”, “Dolby Digital 3/1”, “Dolby Digital 3/2”, “Dolby Digital Dual I”, “Dolby Digital Dual II”, “MPEG 1+1”, “MPEG 1/0”, “MPEG 2/0”. This is the same info as you will see when pressing the “INFO” button in normal user mode (item “signal”). In case of ATSC receiving there will be no info displayed.
  - **3.6. AVL:** Indicates the last status of AVL (Automatic Volume Level): “ON” or “OFF”. Change via “MENU”, “TV”, “SOUND”, “AVL”. AVL can not be set in case of digital audio reception (e.g. Dolby Digital or AC3)
  - **3.7. Delta Volume:** Indicates the last status of the delta volume for the selected preset as set by the customer: from “-12” to “+12”. Change via “MENU”, “TV”, “SOUND”, “DELTA VOLUME”.

- **CSM 4:**
  - **4.1. Preset Lock.** Indicates if the selected preset has a child lock: “LOCKED” or “UNLOCKED”. Change via “MENU”, “TV”, “CHANNELS”, “CHANNEL LOCK”.
  - **4.3. Lock After:** Indicates at what time the channel lock is set: “OFF” or e.g. “18:45” (lock time). Change “MENU”, “TV”, “CHANNELS”, “LOCK AFTER”.
  - **4.6. TV Ratings Lock:** Indicates the “TV ratings lock” as set by the customer. Change via “MENU”, “TV”, “CHANNELS”, “TV RATINGS LOCK”. Possible values are: “ALL”, “NONE”, “TV-Y”, “TV-Y7”, “TV-G”, “TV-PG”, “TV-14” and “TV-MA”.
  - **4.7. Movie Ratings Lock:** Indicates the “Movie ratings lock” as set by the customer. Change via “MENU”, “TV”, “CHANNELS”, “MOVIE RATINGS LOCK”. Possible values are: “ALL”, “NR”, “G”, “PG”, “PG-13”, “R”, “NC-17” and “X”.
  - **4.8. V-Chip TV Status:** Indicates the setting of the V-chip as applied by the selected TV channel. Same values can be shown as for “TV RATINGS LOCK”.
  - **4.9. V-Chip Movie Status:** Indicates the setting of the V-chip as applied by the selected TV channel. Same values can be shown as for “MOVIE RATINGS LOCK”.
  - **4.10. Region rating Status (RRT):** OFF.

- **CSM 5:**
  - **5.1. On timer:** “OFF” or “ON”.
  - **5.2. Location:** Gives the last status of the location setting as set via the installation menu. Possible values are “Shop” and “Home”. If the location is set to “Shop”, several settings are fixed. So for a customer, location must be set to “Home”. Can be changed via the installation menu (see also DFU).

- **CSM 6:**
  - **6.1. HDMI key validity:** Indicates the key’s validity.
  - **6.2. IEEE key validity:** Indicates the key’s validity (n.a.).
  - **6.3. POD key validity:** Indicates the key’s validity (n.a.).

- **CSM 7:**
  - **7.2. TV System:** Gives information about the video system of the selected transmitter.
    a. M: NTSC M signal received.
    b. ATSC: ATSC signal received.
  - **7.3. Source:** Indicates which source is used and the video/audio signal quality of the selected source. (Example: Tuner, Video/NICAM) Source: “TUNER”, “AV1”, “AV2”, “AV3”, “HDMI 1”, “SIDE”. Video signal quality: “VIDEO”, “S-VIDEO”, “RGB 1FH”, “YPBPR 1FH 480P”, “YPBPR 1FH 576P”, “YPBPR 1FH 1080I”, “YPBPR 2FH 480P”, “YPBPR 2FH 576P”, “YPBPR 2FH 1080I”, “RGB 2FH 480P”, “RGB 2FH 576P” or “RGB 2FH 1080I”. Audio signal quality: “STEREO”, “SPDIF 1”, “SPDIF 2”, or “SPDIF”.
  - **7.4. Tuned Bit:** Indicates if the selected preset is automatically tuned (via “Automatic Installation” in the setup menu) or via the automatic tuning system of the TV. In this case “Tuned bit” will show “YES”. If the TV was not able to auto-tune to the correct frequency, this item will show “NO”. So if “NO” is displayed, it could indicate that the customer has manually tuned to a frequency which was too far from a correct frequency, that the TV was not able to auto-tune any more.
  - **7.6. Digital Signal Modulation:** Indicates quality of the received digital signal (0 = low).

- **CSM 8:**
  - **8.1. 12NC one zip SW:** Displays the 12NC number of the one-zip file as it is used for programming software in production. In this one-zip file all below software version can be found.
  - **8.2. Initial Main SW:** Displays the main software version which was initially loaded by the factory.
  - **8.3. Current Main SW:** Displays the built-in main software version. In case of field problems related to software, software can be upgraded. As this software is consumer upgradeable, it will also be published on the Internet. E.g. EJ30U_0.77.0.0.
  - **8.5. Flash Utils SW:** Displays the software version of the software which contains all necessary components of the download application. To program this software, EJTAG tooling is needed.E.g. EJ30U_0.77.0.0.
  - **8.6. Standby SW:** Displays the built-in stand-by processor software version. Upgrading this software will be possible via ComPair or via USB.(see chapter Software upgrade). E.g. STDBY_3.0.1.37.
  - **8.7. MOP SW:** Displays the MOP software version. E.g. RXS3E_2.3.0.0.
  - **8.8. Pacific 3 Flash SW:** Displays the Pacific 3 software version. E.g. P3FW0_1.6.2.0
  - **8.11. NVM version:** Displays the NVM version as programmed by factory. E.g. EJ30U_0.0.0.4

How to Exit CSM

Press any key on the RC transmitter (with exception of the “CHANNEL +/-”, “VOLUME”, “MUTE” and digit (0-9) keys).

5.3 Stepwise Start-up

The stepwise start-up method, as known from FTL/FTP sets is not valid any more. The situation for this chassis is as follows: when the TV is in a protection state detected via the Stand-by Processor (and thus blinking an error) **and** SDM is activated via short cutting the pins on the SSB, the TV starts up until it reaches the situation just before protection. So, this is a kind of automatic stepwise start-up. In combination with the start-up diagrams below, you can see which supplies are present at a certain moment.

Important to know here is, that if e.g. the 3V3 detection fails (and thus error 11 is blinking) **and** the TV is restarted via SDM, the Stand-by Processor will enable the 3V3, but will not go to protection now. The TV will stay in this situation until it is reset (Mains/AC Power supply interrupted).

The abbreviations “SP” and “MP” in the figures stand for:

- SP: protection or error detected by the **S**tand-by **P**rocessor.
- MP: protection or error detected by the VIPER **M**ain **P**rocessor.

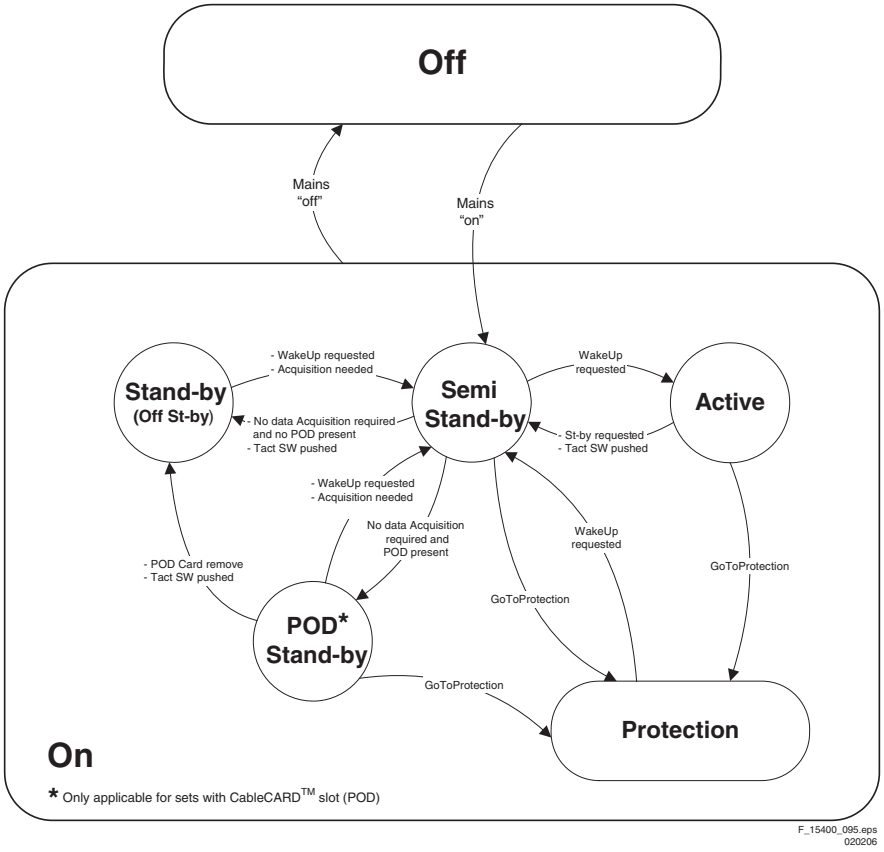

Figure 5-5 Transition diagram

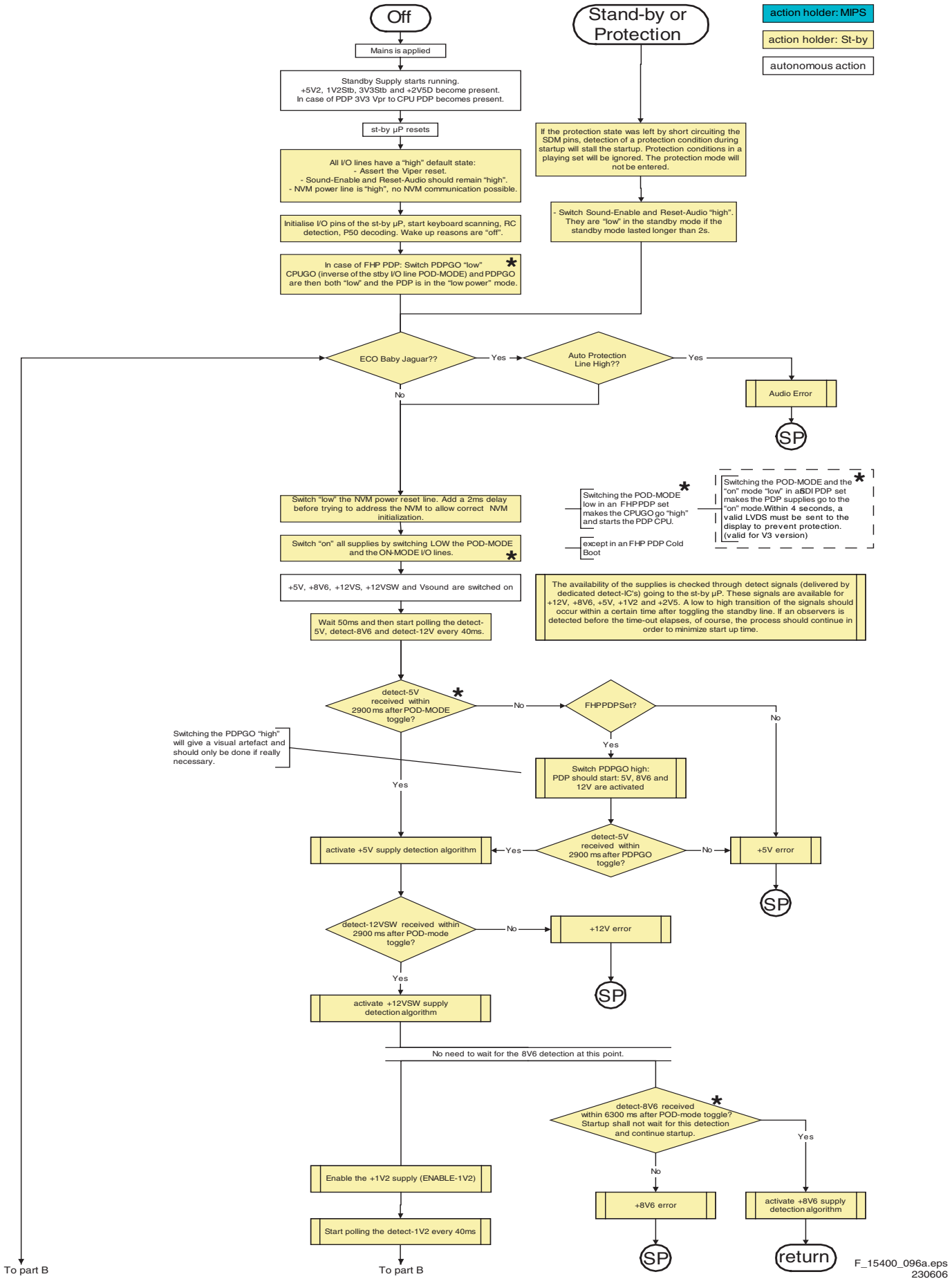

* Only applicable for sets with CableCARD™ slot (POD)

Figure 5-6 "OFF" to "Semi Stand-by" flowchart (part 1)

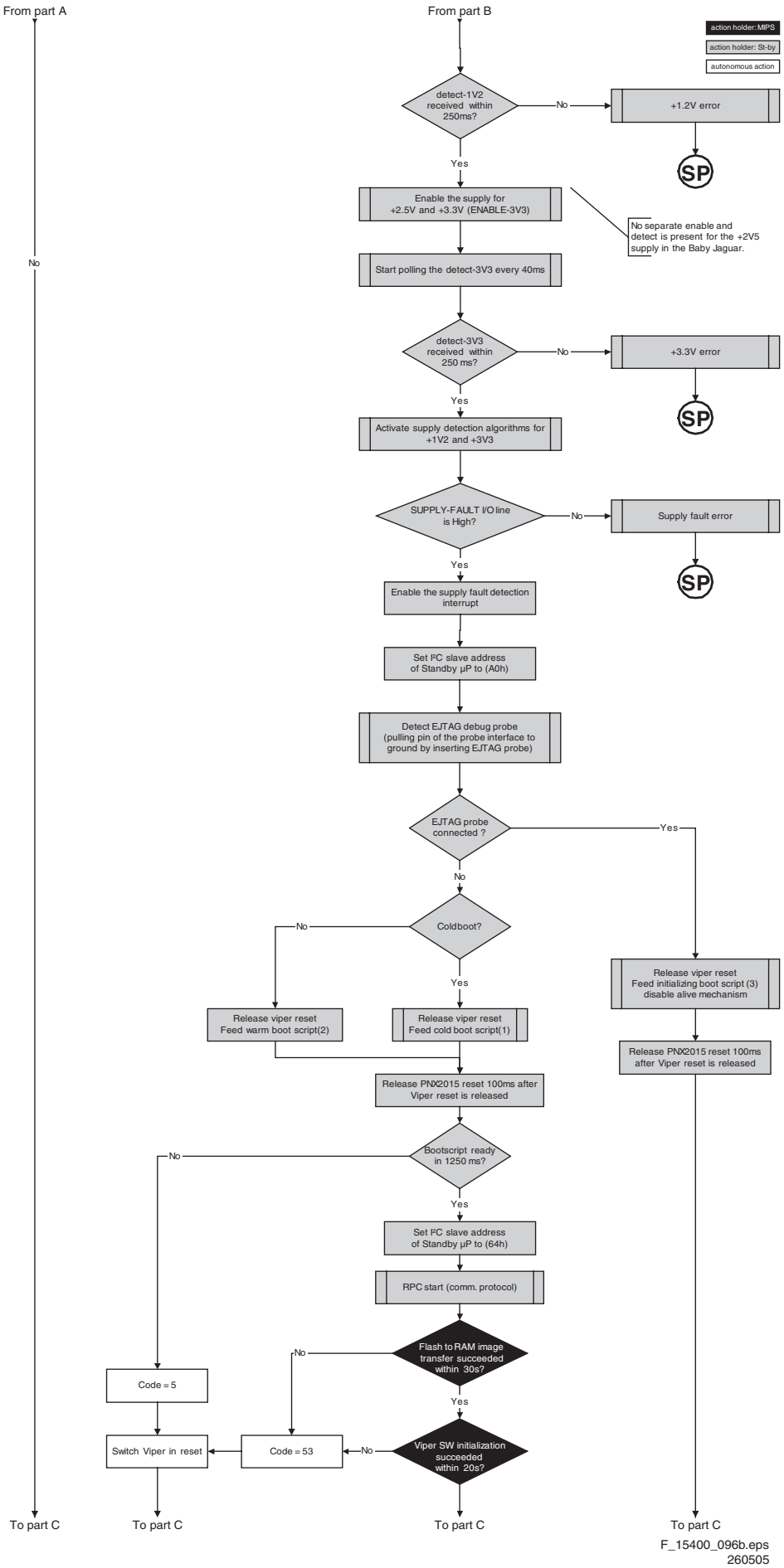

Figure 5-7 “OFF” to “Semi Stand-by” flowchart (part 2)

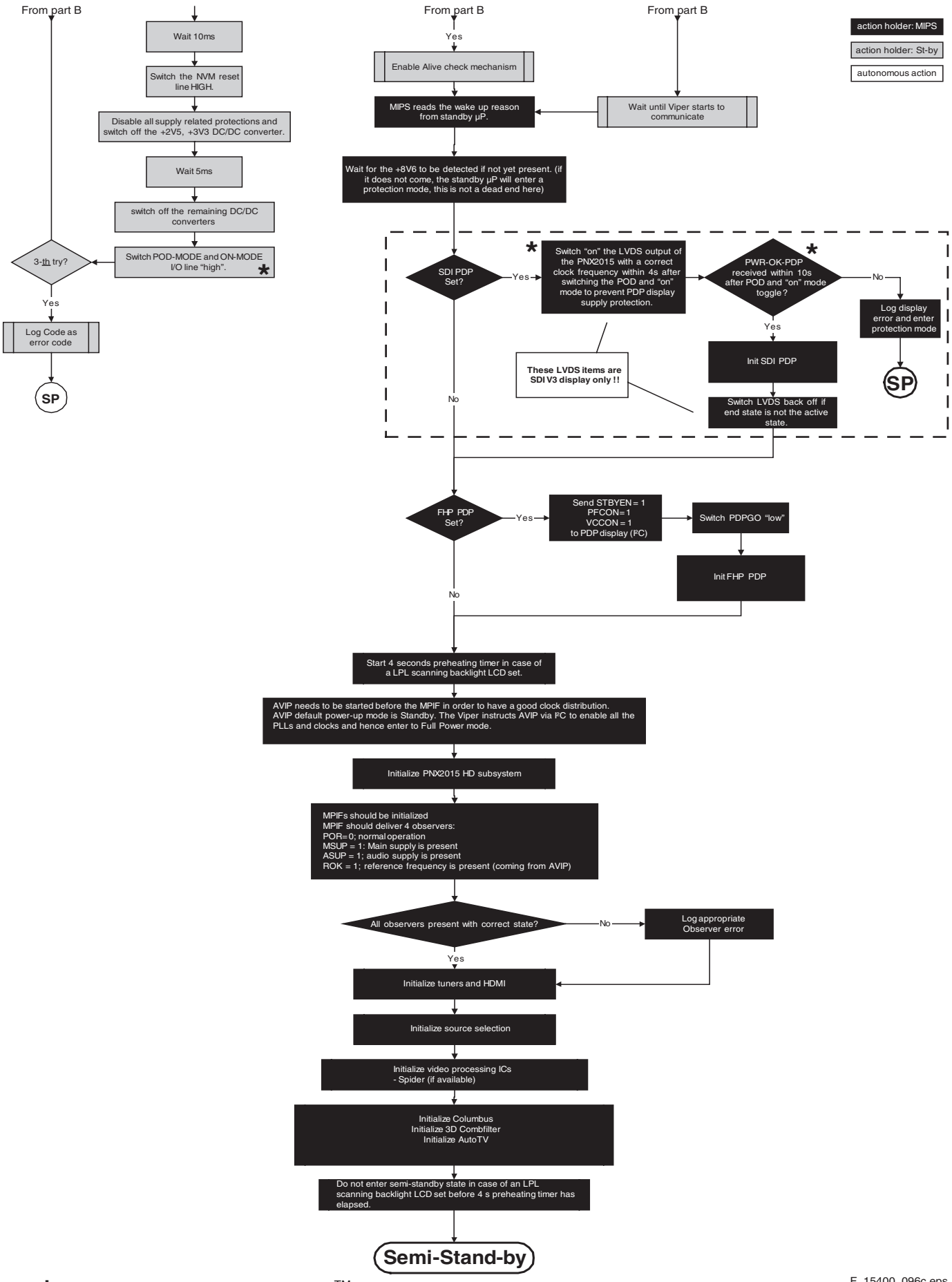

* Only applicable for sets with CableCARD™ slot (POD)

F_15400_096c.eps
020206

Figure 5-8 "OFF" to "Semi Stand-by" flowchart (part 3)

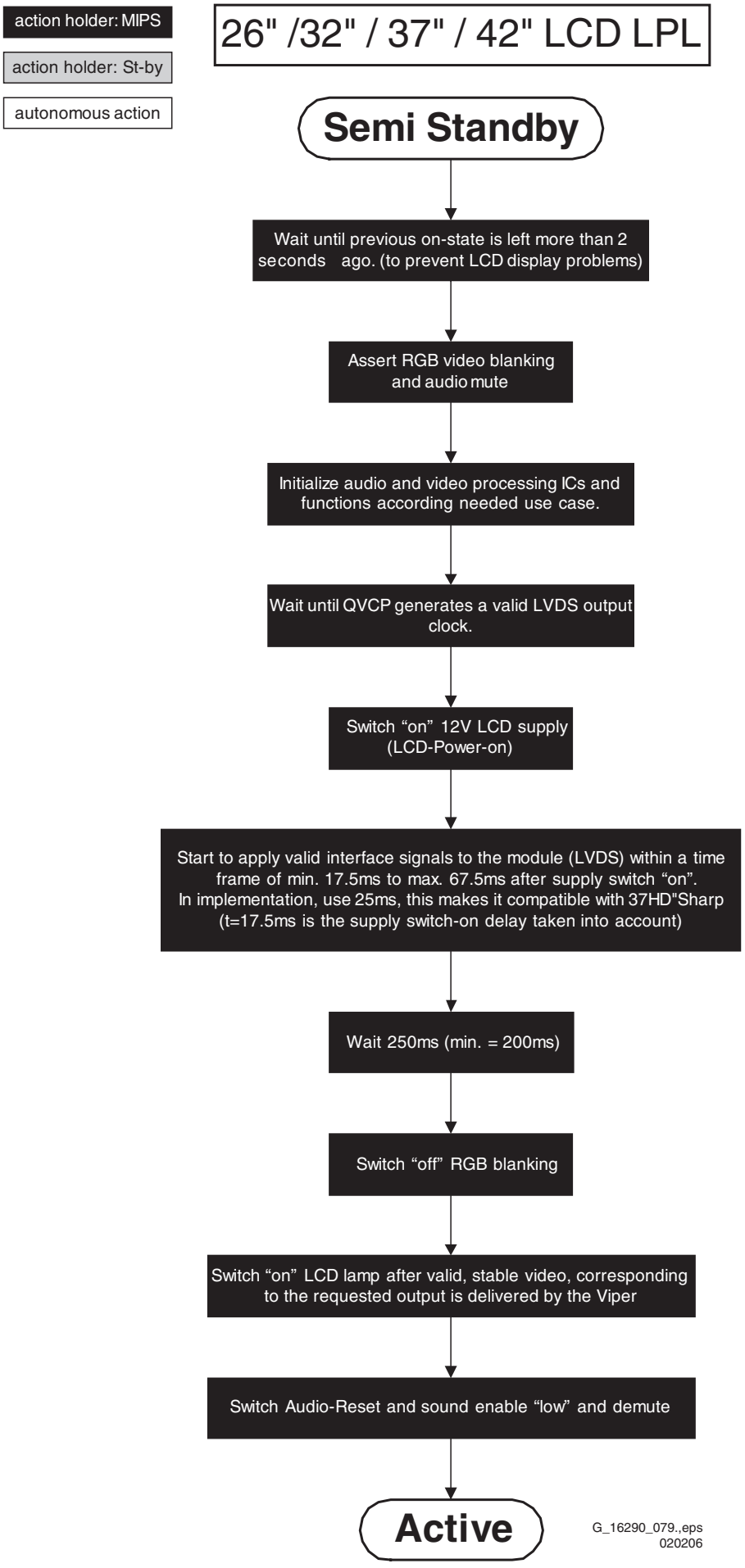

Figure 5-9 “Semi Stand-by” to “Active” flowchart

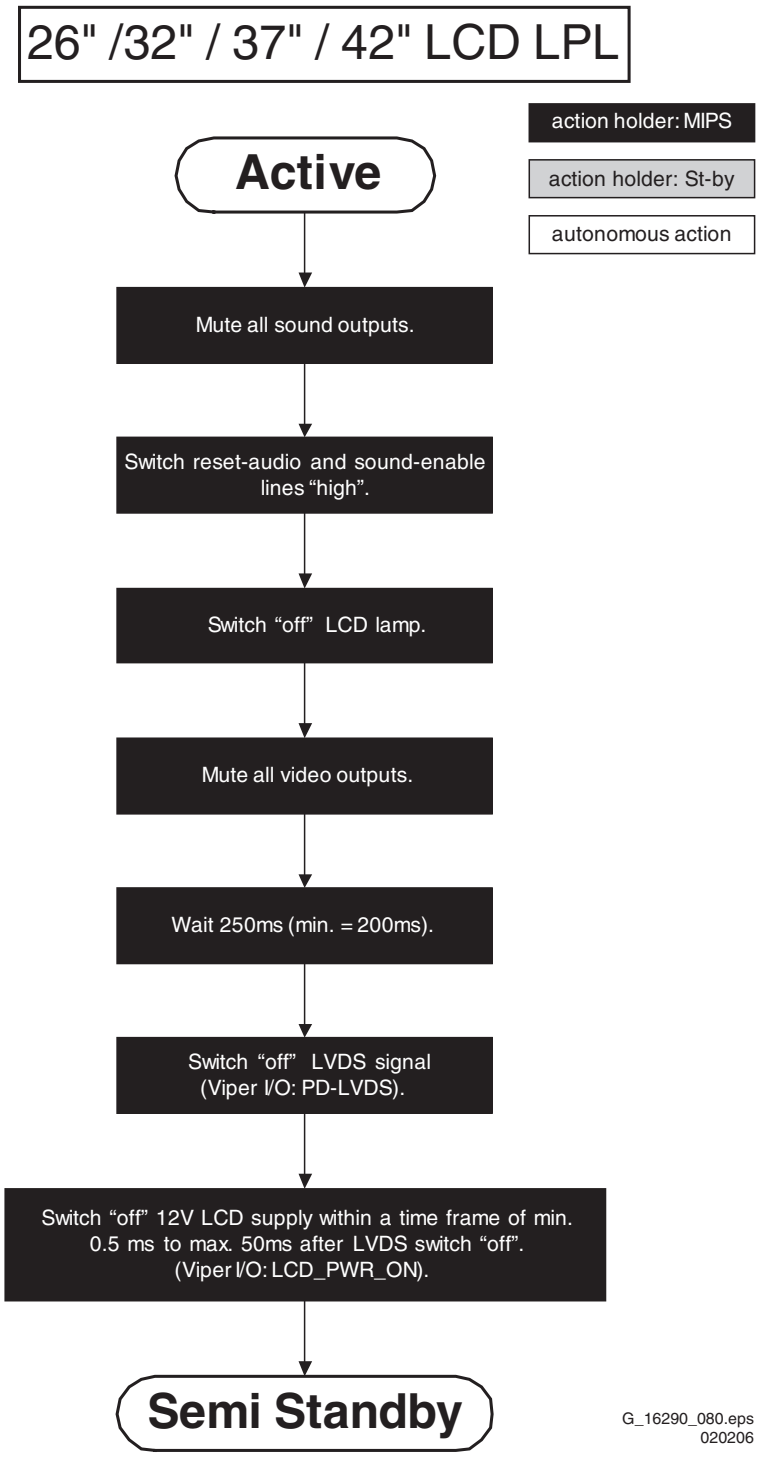

Figure 5-10 "Active" to "Semi Stand-by" flowchart

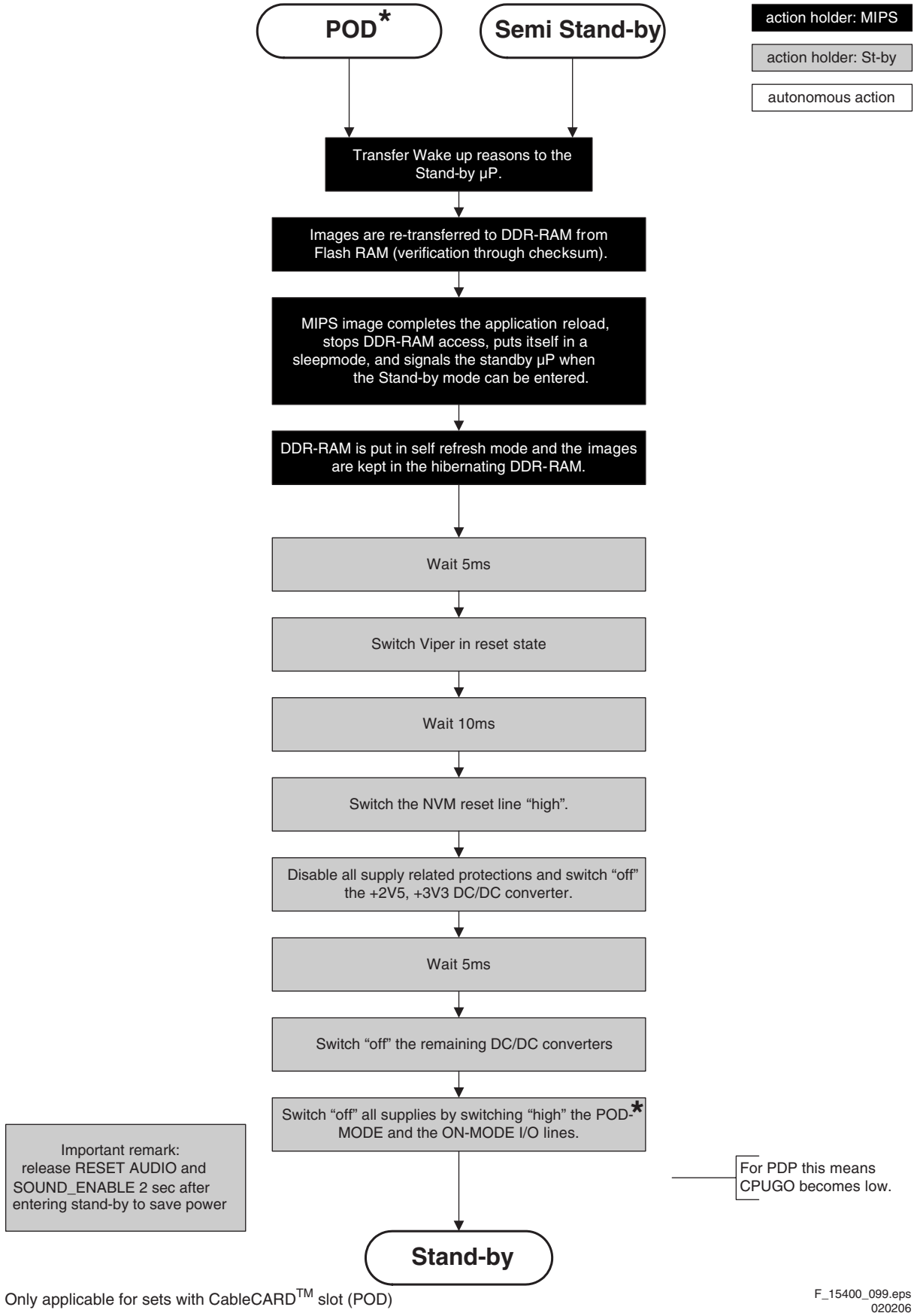

Figure 5-11 "Semi Stand-by" to "Stand-by" flowchart

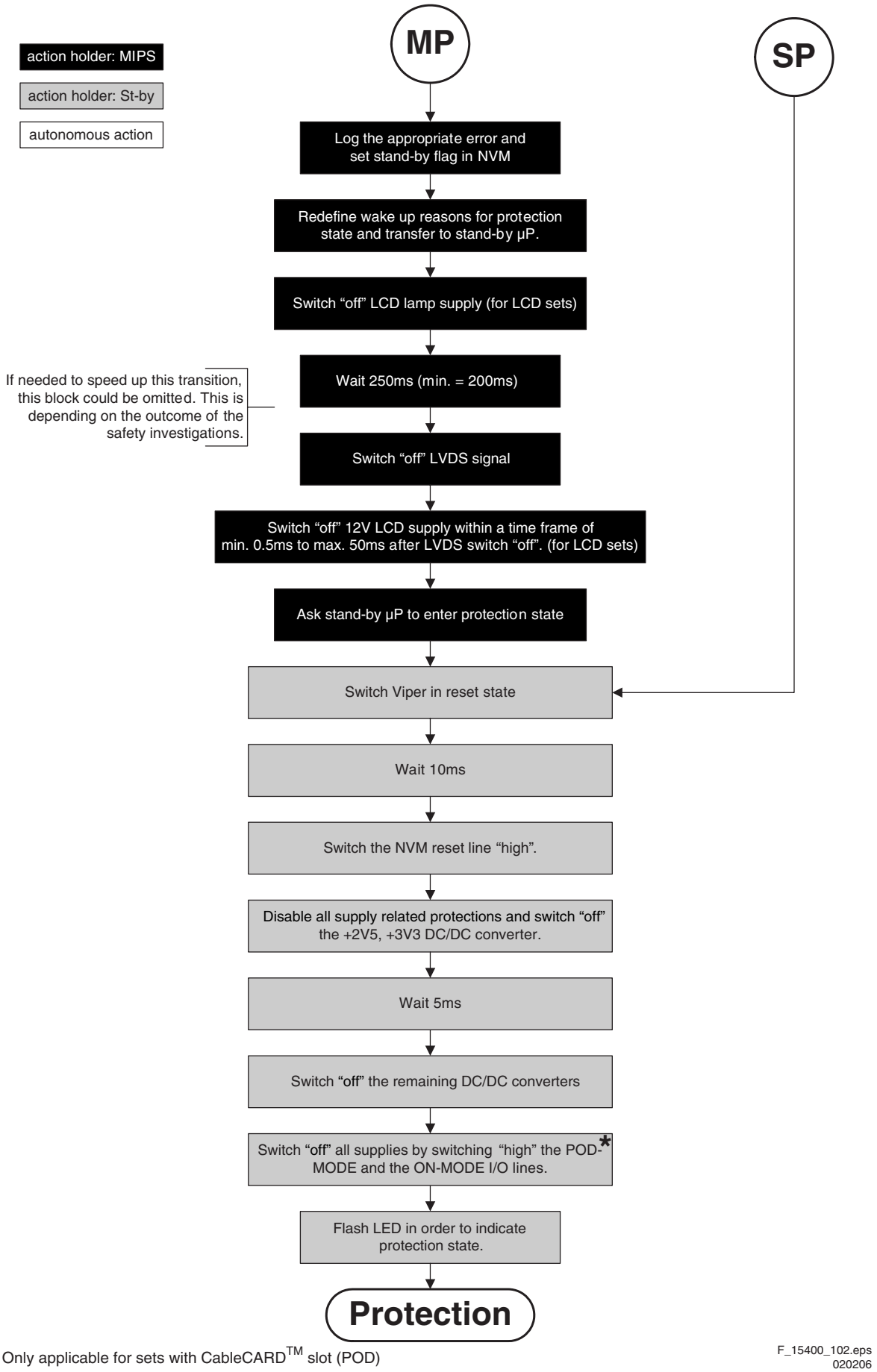

Figure 5-12 "Protection" flowchart

5.4 Service Tools

5.4.1 ComPair

Introduction

ComPair (Computer Aided Repair) is a service tool for Philips Consumer Electronics products. ComPair is a further development on the European DST (service remote control), which allows faster and more accurate diagnostics. ComPair has three big advantages:

1. ComPair helps you to quickly get an understanding on how to repair the chassis in a short time by guiding you systematically through the repair procedures.
2. ComPair allows very detailed diagnostics and is therefore capable of accurately indicating problem areas. You do not have to know anything about I2C or UART commands yourself because ComPair takes care of this.
3. ComPair speeds up the repair time since it can automatically communicate with the chassis (when the microprocessor is working) and all repair information is directly available.

Specifications

ComPair consists of a Windows based fault finding program and an interface box between PC and the (defective) product. The (new) ComPair II interface box is connected **to the PC** via an USB cable. For the TV chassis, the ComPair interface box and the TV communicate via a bidirectional service cable via the service connector(s).

The ComPair fault finding program is able to determine the problem of the defective television. ComPair can gather diagnostic information in two ways:

- **Automatically** (by communicating with the television): ComPair can automatically read out the contents of the entire error buffer. Diagnosis is done on I2C/UART level. ComPair can access the I2C/UART bus of the television. ComPair can send and receive I2C/UART commands to the micro controller of the television. In this way, it is possible for ComPair to communicate (read and write) to devices on the I2C/UART buses of the TV-set.
- **Manually** (by asking questions to you): Automatic diagnosis is only possible if the micro controller of the television is working correctly and only to a certain extent. When this is not the case, ComPair will guide you through the fault finding tree by asking you questions (e.g. *Does the screen give a picture? Click on the correct answer: YES / NO*) and showing you examples (e.g. *Measure test-point I7 and click on the correct oscillogram you see on the oscilloscope*). You can answer by clicking on a link (e.g. text or a waveform picture) that will bring you to the next step in the fault finding process.

By a combination of automatic diagnostics and an interactive question/answer procedure, ComPair will enable you to find most problems in a fast and effective way.

How to Connect

This is described in the chassis fault finding database in ComPair.

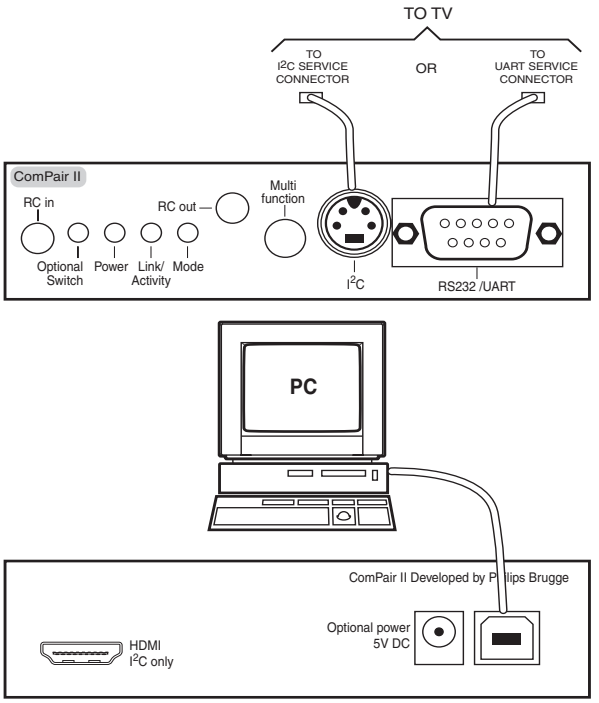

Figure 5-13 ComPair II interface connection

Caution: It is compulsory to connect the TV to the PC as shown in the picture above (with the ComPair interface in between), as the ComPair interface acts as a level shifter. If one connects the TV directly to the PC (via UART), ICs will be blown!

How to Order

ComPair II order codes:

- ComPair II interface: 3122 785 91020.
- ComPair32 CD (update): 3122 785 60160.
- ComPair interface cable: 3122 785 90004.
- ComPair interface extension cable: 3139 131 03791.
- ComPair UART interface cable: 3122 785 90630.

Note: If you encounter any problems, contact your local support desk

5.4.2 LVDS Tool

!!! Note: At this moment, the LVDS tool does **not** support this chassis **!!!**

Introduction

This service tool (also called “ComPair Assistant 1“) may help you to identify, in case the TV does not show any picture, whether the Small Signal Board (SSB) **or** the display of a Flat TV is defective.

Generally this tool is intended to determine if the SSB is working or not. Thus to determine if LVDS, RGB, and sync signals are okay.

How to Connect

Connections are explained in the user manual, which is packed with the tool.

How to Order

- LVDS tool (incl. two LVDS cables: 31p and 20p): 3122 785 90671.
- LVDS tool Service Manual: 3122 785 00810.

5.5 Error Codes

5.5.1 Introduction

The error code buffer contains all detected errors since the last time the buffer was erased. The buffer is written from left to right, new errors are logged at the left side, and all other errors shift one position to the right.
When an error has occurred, the error is added to the list of errors, provided the list is not full or the error is a protection error.
When an error occurs and the error buffer is full, then the new error is not added, and the error buffer stays intact (history is maintained), except when the error is a protection error.
To prevent that an occasional error stays in the list forever, the error is removed from the list after 50+ operation hours.
When multiple errors occur (errors occurred within a short time span), there is a high probability that there is some relation between them.

Basically there are three kinds of errors:

- **Errors detected by the Stand-by Processor.** These errors will always lead to protection and an automatic start of the blinking LED for the concerned error (see paragraph “The Blinking LED Procedure”). In these cases SDM can be used to start up (see chapter “Stepwise Start-up”).
- **Errors detected by VIPER that lead to protection.** In this case the TV will go to protection and the front LED will blink at 3 Hz. Further diagnosis via service modes is not possible here (see also paragraph “Error Codes” -> “Error Buffer” -> “Extra Info”).
- **Errors detected by VIPER that do not lead to protection.** In this case the error can be read out via ComPair, via the blinking LED method, or in case you have picture, via SAM.

5.5.2 How to Read the Error Buffer

Use one of the following methods:

- On screen via the SAM (only if you have a picture). E.g.:
  - **00 00 00 00 00**: No errors detected
  - **06 00 00 00 00**: Error code 6 is the last and only detected error
  - **09 06 00 00 00**: Error code 6 was first detected and error code 9 is the last detected error
- Via the blinking LED procedure (when you have no picture). See next paragraph.
- Via ComPair.

5.5.3 How to Clear the Error Buffer

Use one of the following methods:

- By activation of the “RESET ERROR BUFFER” command in the SAM menu.
- With a normal RC, key in sequence “MUTE” followed by “062599” and “OK”.
- If the content of the error buffer has not changed for 50+ hours, it resets automatically.

5.5.4 Error Buffer

In case of non-intermittent faults, clear the error buffer before you begin the repair (**before** clearing the buffer, write down the content, as this history can give you significant information). This to ensure that old error codes are no longer present.
If possible, check the entire contents of the error buffer. In some situations, an error code is only the result of another error code and not the actual cause (e.g., a fault in the protection detection circuitry can also lead to a protection).
There are several mechanisms of error detection:

- Via error bits in the status registers of ICs.
- Via polling on I/O pins going to the stand-by processor.
- Via sensing of analogue values on the stand-by processor.
- Via a “not acknowledge” of an I^2C communication

Take notice that some errors need more than 90 seconds before they start blinking. So in case of problems wait 2 minutes from start-up onwards, and then check if the front LED is blinking.

Table 5-2 Error code overview

Error	Description	Error/Prot	Detected by	Device	Defective module	Result
1	I^2C1	P	VIPER	n.a.	I^2C1_blocked	Protection + 3 Hz blinking
2	I^2C2	P	VIPER	n.a.	I^2C2_blocked	Protection + 3 Hz blinking
3	I^2C3	P	Stby µP	n.a.	I^2C3_blocked	Protection + 3 Hz blinking
4	I^2C4	E	VIPER	n.a.	I^2C4_blocked	Protection + 3 Hz blinking
5	VIPER does not boot (hardware failure)	P	Stby µP	n.a.		Protection + Error blinking
6	5V supply	P	Stby µP	n.a.		Protection + Error blinking
8	1.2V DC/DC	P	Stby µP	n.a.		Protection + Error blinking
11	3.3V DC/DC	P	Stby µP	n.a.		Protection + Error blinking
12	12V supply	P	Stby µP	n.a.		Protection + Error blinking
14	Supply Class D amplifiers	P	Stby µP			Protection + Error blinking
18	MPIF1 ref freq	E	VIPER	PNX3000	IF I/O	Error logged
21	HDMI Mux switch	E		AD8190ACPZ		
25	Supply fault	P	Stby µP			Protection + Error blinking
32	MPIF1	E	VIPER	PNX3000	Analog Front End 1	Error logged
34	Tuner1	E	VIPER	Tuner type	Tuner 1	Error logged
37	Channel decoder	E	VIPER	NXT2004		Error logged
43	Hi Rate Front End	E	VIPER	TDA9975	HDMI	Error logged
45	Columbus 1	E	VIPER	PNX2015 or 2018	Comb filter	Error logged
46	Pacific 3	E	VIPER	T6TF4HFG		Standby
53	VIPER does not boot (software failure)	P	Stby µP	PNX8550		Protection (after 3 minutes) + Error blinking

Extra Info

- **Error 1 (I²C bus 1 blocked).** When this error occurs, the TV will go to protection and the front LED will blink at 3 Hz. Now you can partially restart the TV via the SDM shortcut pins on the SSB. Depending on the software version it is possible that no further diagnose (error code read-out) is possible. With the knowledge that only errors 1, 2, 4, and 63 result in a 3 Hz blinking LED, the range of possible defects is limited.
- **Error 2 (I²C bus 2 blocked).** When this error occurs, the TV will go to protection and the front LED will blink at 3 Hz. Now you can partially restart the TV via the SDM shortcut pins on the SSB. Due to hardware restriction (I²C bus 2 is the fast I²C bus) it will be impossible to start up the VIPER and therefore it is also impossible to read out the error codes via ComPair or via the blinking LED method. With the knowledge that only errors 1, 2, 4, and 63 result in a 3 Hz blinking LED, the range of possible defects is limited. When you have restarted the TV via the SDM shortcut pins, and then pressed "CH+" on your remote control, the TV will go to protection again, and the front LED blink at 3 Hz again. This could be an indication that the problem is related to error 2.
- **Error 3 (I²C bus 3 blocked).** There are only three devices on I²C bus 3: VIPER, Stand-by Processor, and NVM. The Stand-by Processor is the detection device of this error, so this error will only occur if the VIPER or the NVM is blocking the bus. This error will also be logged when the NVM gives no acknowledge on the I²C bus (see error 44). Note that if the 12 V supply is missing (connector 1M46 on the SSB), the DC/DC supply on the SSB will not work. Therefore the VIPER will not get supplies and could block I²C bus 3. So, a missing 12 V can also lead to an error 3.
- **Error 4 (I²C bus 4 blocked).** Error 4 is displayed in SAM. No protection.
- **Error 5 (Viper doesn't boot)**. This error will point to a severe hardware problem around the VIPER (supplies not OK, VIPER completely dead, I²C link between VIPER and Stand-by Processor broken, etc. ...).
- **Error 7 (8.6 V error).** Except a physical problem with the 8.6 V itself, it is also possible that there is something wrong with the Audio DC Protection: see paragraph "Hardware Protections" for this.
- **Error 12 (12 V error).** Except a physical problem with the 12 V itself, it is also possible that there is something wrong with the Audio DC Protection: see paragraph "Hardware Protections" for this.
- **Error 14 (Audio supply).** This error is triggered in case of too low voltage of the audio supplies and therefore a drop of the audio supply voltage of below approx. 9 V per supply rail (or lower than 18 V rail to rail). Also a DC voltage of higher than 1 V DC on the speakers will lead to protection and error 14 blinking. For LCD sets this circuit can be found on schematic SA3, for PDP sets this can be found on schematic C. It should be noted that for 26-inch models there is only a supply link between the amplifiers and the stand-by μC whereas in all other models this link is implemented by Audio-Prot line pin 7 on 1 M02.
- **Error 18 (MPIF1)**. Error 18 is displayed in SAM. No protection.
- **Error 21 (HDMI switch)**. Error 21 is displayed in SAM. No protection.
- **Error 25 (Supply fault)**. When this error occurs, the TV will go to protection and the front LED will blink at 3 Hz.
- **Error 29 (AVIP1).** This error will probably generate extra errors. You will probably also see errors 32 (MPIF) and error 31 (AVIP 2). Error 29 and 31 will always be logged together due to the fact that both AVIPs are inside the PNX2015 and are on the same I²C bus. In this case start looking for the cause around AVIP (part of PNX2015).
- **Error 31 (AVIP2).** See info on error 29.
- **Error 34 (Tuner 1).** When this error is logged, it is not sure that there is something wrong with the tuner itself. It is also possible that there is something wrong with the communication between channel decoder and tuner. See schematic B2B.
- **Error 37 (Channel decoder).** This error will always log error 34 (tuner) extra. This is due to the fact that the tuner I²C bus is coming from the channel decoder.
- **Error 44 (NVM).** This error will never occur because it is masked by error 3 (I²C bus 3). The detection mechanism for error 3 checks on an I²C acknowledge of the NVM. If NVM gives no acknowledge, the stand-by software assumes that the bus is blocked, the TV goes to protection and error 3 will be blinking.
- **Error 53.** This error will indicate that the VIPER has started to function (by reading his boot script, if this would have failed, error 5 would blink) but initialization was never completed because of hardware peripheral problems (NAND flash, ...) or software initialization problems. Possible cause could be that there is no valid software loaded (try to upgrade to the latest main software version).

5.6 The Blinking LED Procedure

5.6.1 Introduction

The blinking LED procedure can be split up into two situations:

- Blinking LED procedure in case of a protection detected by the stand-by processor. In this case the error is automatically blinked. This will be only one error, namely the one that is causing the protection. Therefore, you do not have to do anything special, just read out the blinks. A long blink indicates the decimal digit, a short blink indicates the units.
- Blinking LED procedure in the "ON" state. Via this procedure, you can make the contents of the error buffer visible via the front LED. This is especially useful for fault finding, when there is no picture.

When the blinking LED procedure is activated in the "ON" state, the front LED will show (blink) the contents of the error-buffer. Error-codes > 10 are shown as follows:

1. "n" long blinks (where "n" = 1 - 9) indicating decimal digit,
2. A pause of 1.5 s,
3. "n" short blinks (where "n"= 1 - 9),
4. A pause of approx. 3 s.
5. When all the error-codes are displayed, the sequence finishes with a LED blink of 3 s,
6. The sequence starts again.

Example: Error 12 9 6 0 0.
After activation of the SDM, the front LED will show:

1. 1 long blink of 750 ms (which is an indication of the decimal digit) followed by a pause of 1.5 s,
2. 2 short blinks of 250 ms followed by a pause of 3 s,
3. 9 short blinks followed by a pause of 3 s,
4. 6 short blinks followed by a pause of 3 s,
5. 1 long blink of 3 s to finish the sequence,
6. The sequence starts again.

5.6.2 How to Activate

Use one of the following methods:

- **Activate the SDM.** The blinking front LED will show the entire contents of the error buffer (this works in "normal operation" mode).
- **Transmit the commands "MUTE" - "062500" - "OK" with a normal RC.** The complete error buffer is shown. Take notice that it takes some seconds before the blinking LED starts.
- **Transmit the commands "MUTE" - "06250x" - "OK" with a normal RC** (where "x" is a number between 1 and 5). When x= 1 the last detected error is shown, x= 2 the second last error, etc.... Take notice that it takes some seconds before the LED starts blinking.

5.7 Protections

5.7.1 Software Protections

Most of the protections and errors use either the stand-by microprocessor or the VIPER controller as detection device. Since in these cases, checking of observers, polling of ADCs, filtering of input values are all heavily software based, these protections are referred to as software protections.
There are several types of software related protections, solving a variety of fault conditions:

- **Protections related to supplies:** check of the 12V, +5V, +8V6, +1.2V, +2.5V and +3.3V.
- **Protections related to breakdown of the safety check mechanism.** E.g. since a lot of protection detections are done by means of the VIPER, failing of the VIPER communication will have to initiate a protection mode since safety cannot be guaranteed anymore.

Remark on the Supply Errors
The detection of a supply dip or supply loss during the normal playing of the set does not lead to a protection, but to a cold reboot of the set.

Protections during Start-up
During TV start-up, some voltages and IC observers are actively monitored to be able to optimize the start-up speed, and to assure good operation of all components. If these monitors do not respond in a defined way, this indicates a malfunction of the system and leads to a protection. As the observers are only used during start-up, they are described in the start-up flow in detail (see paragraph “Stepwise Start-up").

5.7.2 Hardware Protections

There is one hardware protection in this chassis: “Audio DC Protection”. This protection occurs when there is a DC voltage on the speakers. In that case the main supply is switched "OFF", but the stand-by supply is still working.
In case of LCD supplies, the 12V supply will drop. This will be detected by the stand-by processor, which will start blinking the 12 V error (error 12).

Repair Tip

- It is also possible that you have an audio DC protection because of an interruption in one or both speakers (the DC voltage that is still on the circuit cannot disappear through the speakers).

5.8 Fault Finding and Repair Tips

Read also paragraph "Error Codes" - "Extra Info".

5.8.1 Exit “Factory Mode”

When an "F" is displayed in the screen's right corner, this means that the set is in "Factory" mode, and it normally happens after a new SSB has been mounted.
To exit this mode, push the "VOLUME minus" button on the TV's keyboard control for 5 seconds and restart the set

5.8.2 MPIF

Important things to make the MPIF work:

- Supply.
- Clock signal from the AVIP.
- I^2C from the VIPER.

5.8.3 AVIP

Important things to make the AVIP work:

- Supplies.
- Clock signal from the VIPER.
- I^2C from the VIPER (error 29 and 31).

5.8.4 DC/DC Converter

Introduction

- The best way to find a failure in the DC/DC converters is to check their starting-up sequence at power "ON" via the Mains/AC Power cord, presuming that the Stand-by Processor is operational.
- If the input voltage of the DC/DC converters is around 12 V (measured on the decoupling capacitors 2U17/2U25/ 2U45) and the ENABLE signals are "low" (active), then the output voltages should have their normal values.
- First, the Stand-by Processor activates the +1V2 supply (via ENABLE-1V2).
- Then, after this voltage becomes present and is detected OK (about 100 ms), the other two voltages (+2V5 and +3V3) will be activated (via ENABLE-3V3).
- The current consumption of controller IC 7U00 is around 20 mA (that means around 200 mV voltage drop across resistor 3U22).
- The current capability of DC/DC converters is quite high (short-circuit current is 7 to 10 A), therefore if there is a linear integrated stabilizer that, for example delivers 1.8V from +3V3 with its output overloaded, the +3V3 stays usually at its normal value even though the consumption from +3V3 increases significantly.
- The +2V5 supply voltage is obtained via a linear stabilizer made with discrete components that can deliver a lot of current. Therefore, in case +2V5 (or +2V5D) is short-circuited to GND, the +3V3 will not have the normal value but much less.
- The supply voltage +12VSW is protected for over-currents by fuse 1U04.

Fault Finding

- **Symptom:** +1V2, +2V5, and +3V3 not present (even for a short while ~10ms).
  1. Check 12V availability (fuse 1U01, resistor 3U22, power MOSFETs) and enable signal ENABLE-1V2 (active low).
  2. Check the voltage on pin 9 (1.5 V).
  3. Check for +1V2 output voltage short-circuit to GND that can generate pulsed over-currents 7-10 A through coil 5U03.
  4. Check the over-current detection circuit (2U12 or 3U97 interrupted).

- **Symptom:** +1V2 present for about 100 ms. Supplies +2V5 and +3V3 not rising.
  1. Check the ENABLE-3V3 signal (active "low").
  2. Check the voltage on pin 8 (1.5 V).
  3. Check the under-voltage detection circuit (the voltage on collector of transistor 7U10-1 should be less than 0.8 V).
  4. Check for output voltages short-circuits to GND (+3V3, +2V5 and +2V5D) that generate pulsed over-currents of 7-10 A through coil 5U00.
  5. Check the over-current detection circuit (2U18 or 3U83 interrupted).

- **Symptom:** +1V2 OK, but +2V5 and +3V3 present for about 100 ms. **Cause:** The SUPPLY-FAULT line stays "low" even though the +3V3 and +1V2 is available. The Stand-by Processor is detecting that and switches all supply voltages "OFF".
  1. Check the drop voltage across resistor 3U22 (this could be too high)
  2. Check if the +1V2 or +3V3 are higher than their normal values. This can be due to defective DC feedback of the respective DC/DC converter (3U18 or 3UA7).

- **Symptom:** +1V2, +2V5, and +3V3 look okay, except the ripple voltage is increased (audible noise can come from the filtering coils 5U00 or 5U03).
  Cause: Instability of the frequency and/or duty cycle of one or both DC/DC converters.
  – Check resistor 3U06, the decoupling capacitors, the AC feedback circuits (2U20 + 2U21 + 3U14 + 3U15 for +1V2 or 2U19 + 2U85 + 3U12 + 3U13 for +3V3), the compensation capacitors 2U09, 2U10, 2U23 and 2U73, and IC 7U00.

Note 1: If fuse 1U01 is broken, this usually means a pair of defective power MOSFETs (7U01 or 7U03). Item 7U00 should be replaced as well in this case.

5.9 Software Upgrading

5.9.1 Introduction

The set software and security keys are stored in a NAND-Flash (item 7P80), which is connected to the VIPER via the PCI bus.

It is possible **for the user** to upgrade the **main** software via the USB port. This allows replacement of a software image in a standalone set, without the need of an E-JTAG debugger. A description on how to upgrade the main software can be found in the "Directions For Use".

Important: When the NAND-Flash must be replaced, a new SSB must be ordered, due to the presence of the security keys!!! See table “SSB service kits” for the order codes.
Perform the following actions after SSB replacement:
1. Set the correct option codes (see sticker inside the TV).
2. Update the TV software (see chapter 3 for instructions).
3. Perform the alignments as described in chapter 8.
4. Check in CSM menu 5 if the HDMI and POD keys are valid.

Table 5-3 SSB service kits (for EJ3.0U LA chassis)

Model Number	New SSB order code
all CTNs	See spare parts list

Note: After replacing the SSB, execute the alignments according to the instructions in this manual.

5.9.2 Main Software Upgrade

The software image resides in the NAND-Flash, and is formatted in the following way:

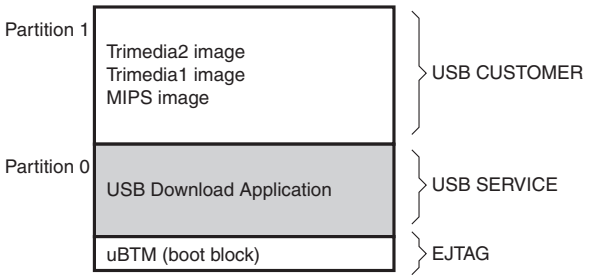

Figure 5-14 NAND-Flash format

Executables are stored as files in a file system. The boot loader (uBTM) will load the USB Download Application in partition 0 (USB drivers, bootscript, etc.). This application makes it then possible to upgrade the main software via USB.

Installing "Partition 0" software is possible via an external EJTAG tool, but also in a special way with the USB stick (see description in paragraph “Partition 0“).

Partition 1 (Customer)
To do a main software upgrade (partition 1) via USB, the set must be operational, and the "Partition 0" files for the VIPER **must** be installed in the NAND-Flash!

The new software can be uploaded to the TV by using a portable memory device or USB storage compliant devices (e.g. USB memory stick). You can download the new software from the Philips website to your PC.

Partition 0 (Service)
If the "Partition 0" software is corrupted, the software needs to be re-installed.
To upgrade this “USB download application” (partition 0 except the bootblock), insert an USB stick with the correct software, but press the “red” button on the remote control (in ”TV” mode) when it is asked via the on screen text.

Caution:
- The USB download application will now erase **both** partitions (except the boot block), so you need to reload the main SW after upgrading the USB download application. As long as this is not done, the USB download application will start when the set is switched “ON”.
- When something goes wrong during the progress of this method (e.g. voltage dip or corrupted software file), the set will not start up, and can only be recovered via the EJTAG tool!

5.9.3 Manual Start of the Main Software Upgrade Application

Normally, the software upgrading procedure will start automatically, when a memory device with the correct software is inserted, but in case this does not work, it is possible to force the TV into the software upgrade application. To do so:

- Disconnect the TV from the Mains/AC Power.
- Press the “OK” button on a Philips DVD RC-6 remote control (it is also possible to use the TV remote in "DVD" mode).
- Keep the “OK” button pressed while connecting the TV to the Mains/AC Power.
- The software upgrade application will start.
- When a memory device with upgrade software is connected, the upgrade process will start.

5.9.4 Stand-by Software Upgrade

It will be possible to upgrade the Stand-by software via a PC and the ComPair interface. Check paragraph "ComPair" on how to connect the interface. To upgrade the Stand-by software, use the following steps:

1. Disconnect the TV from the Mains/AC Power.
2. Short circuit the SPI pins [2] on the SSB. They are located outside the shielding (see figure “SDM and SPI service pads” earlier in this chapter).
3. Keep the SPI pins shorted while connecting the TV to the Mains/AC Power.
4. Release the short circuit after approx. two seconds.
5. Start up HyperTerminal (can be found in every Windows application via Programs -> Accessories -> Communications -> HyperTerminal. Use the following settings:
   - COM1
   - Bits per second = 38400
   - Data bits = 8
   - Parity = none
   - Stop bits = 1
   - Flow control = Xon / Xoff.
6. Press “Shift U” on your PC keyboard. You should now see the following info:
   - PNX2015 Loader V1.0
   - 19-09-2003
   - DEVID=0x05
   - Erasing
   - MCSUM=0x0000
   - =
7. If you do not see the above info, restart the above procedure, and check your HyperTerminal settings and the connections between PC and TV.
8. Via “Transfer” -> “Send text file ...”, you can send the proper upgrade file to the TV. This file will be distributed via the Service Organization.
9. After successful programming, you must see the following info:
   - DCSUM=0xECB3
   - :Ok
   - MCSUM=0xECB3
   - Programming
   - PCSUM=0xECB3
   - Finished
10. If you do not see this info, restart the complete procedure.
11. Close HyperTerminal.
12. Disconnect and connect Mains/AC Power again.

6. Block Diagrams, Test Point Overviews, and Waveforms

Wiring Diagram 32”

WIRING 32”

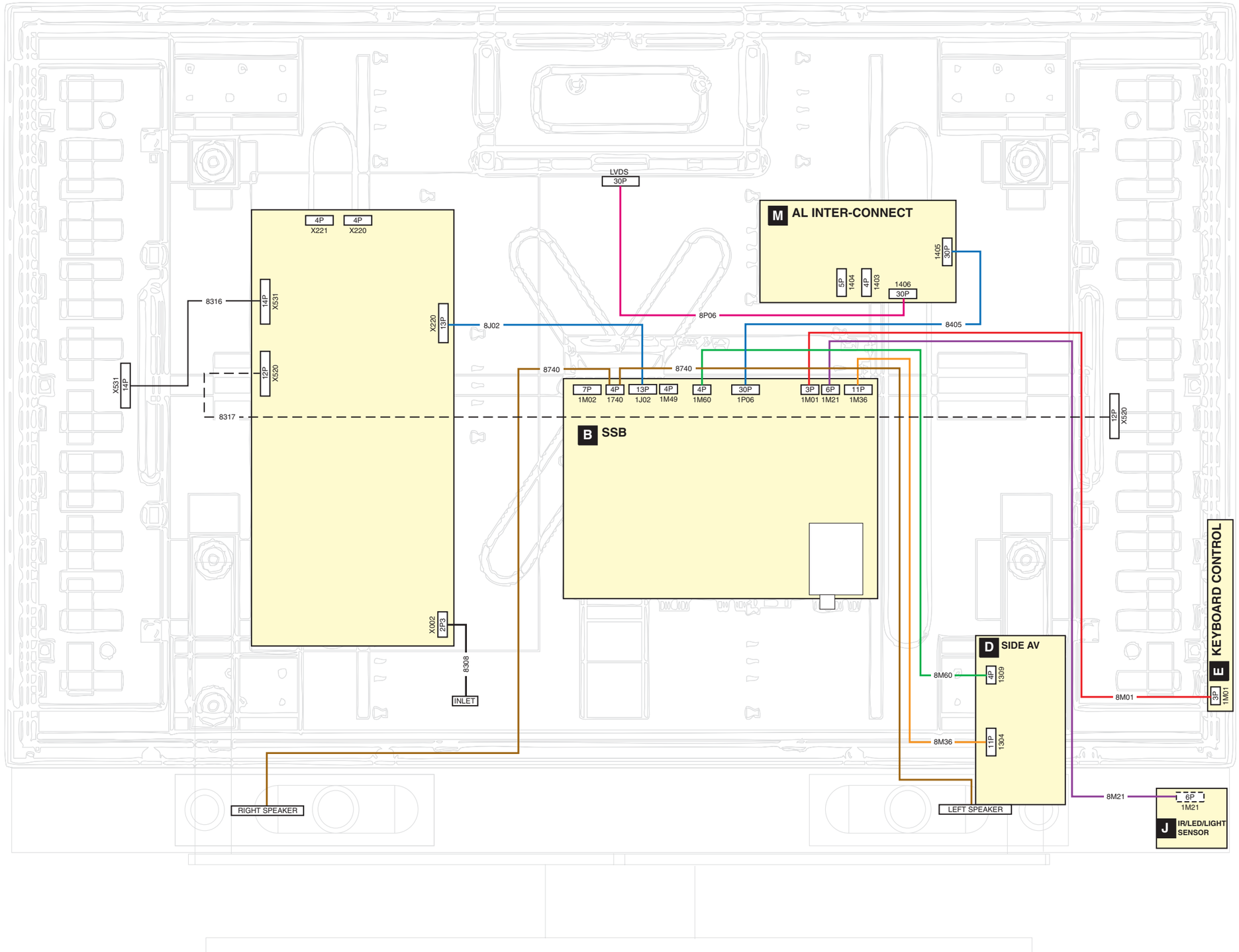

G_16840_021.eps
290107

Wiring Diagram 32” AL

WIRING 32” AL

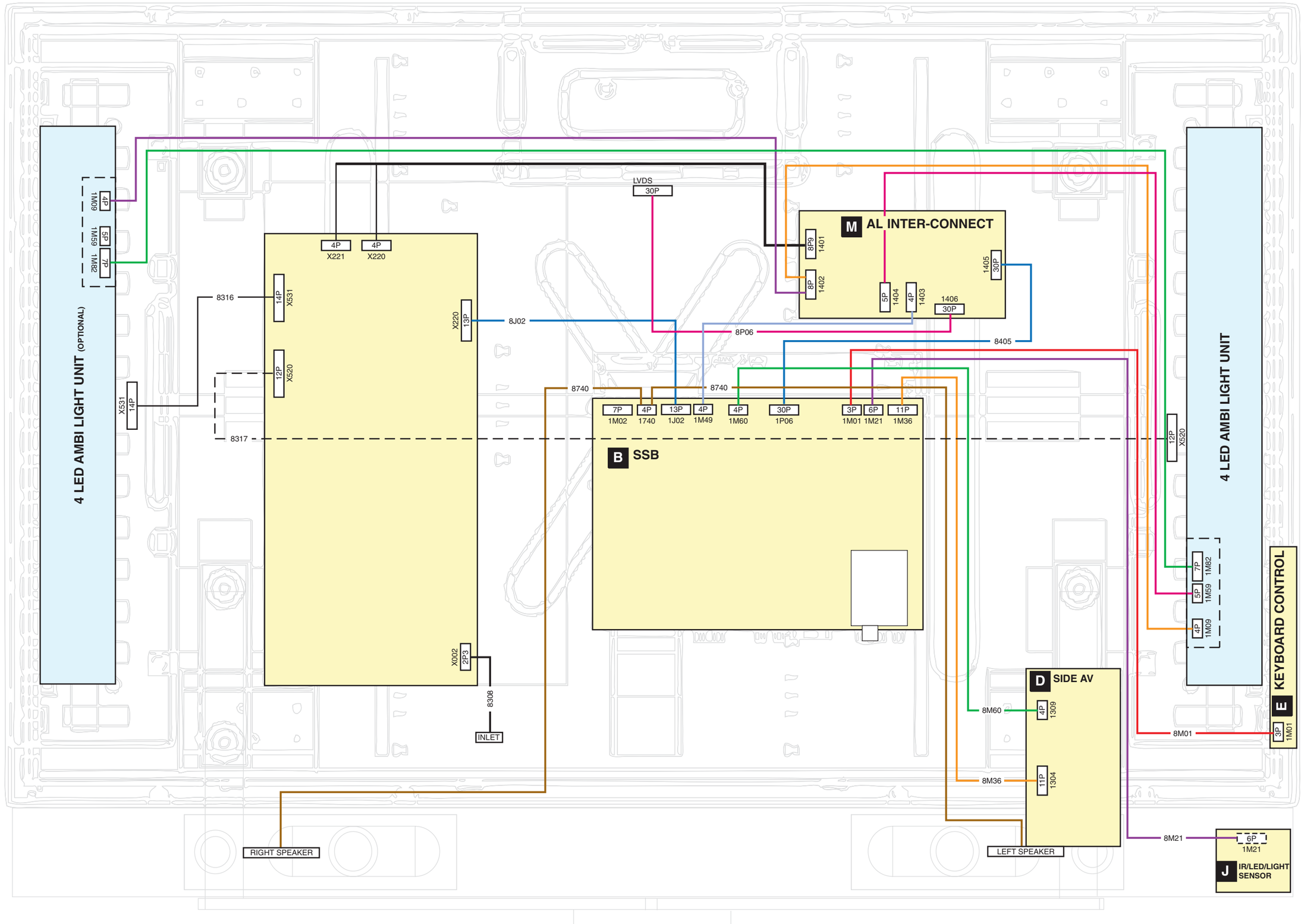

Wiring Diagram 37”-42”

WIRING 37”- 42”

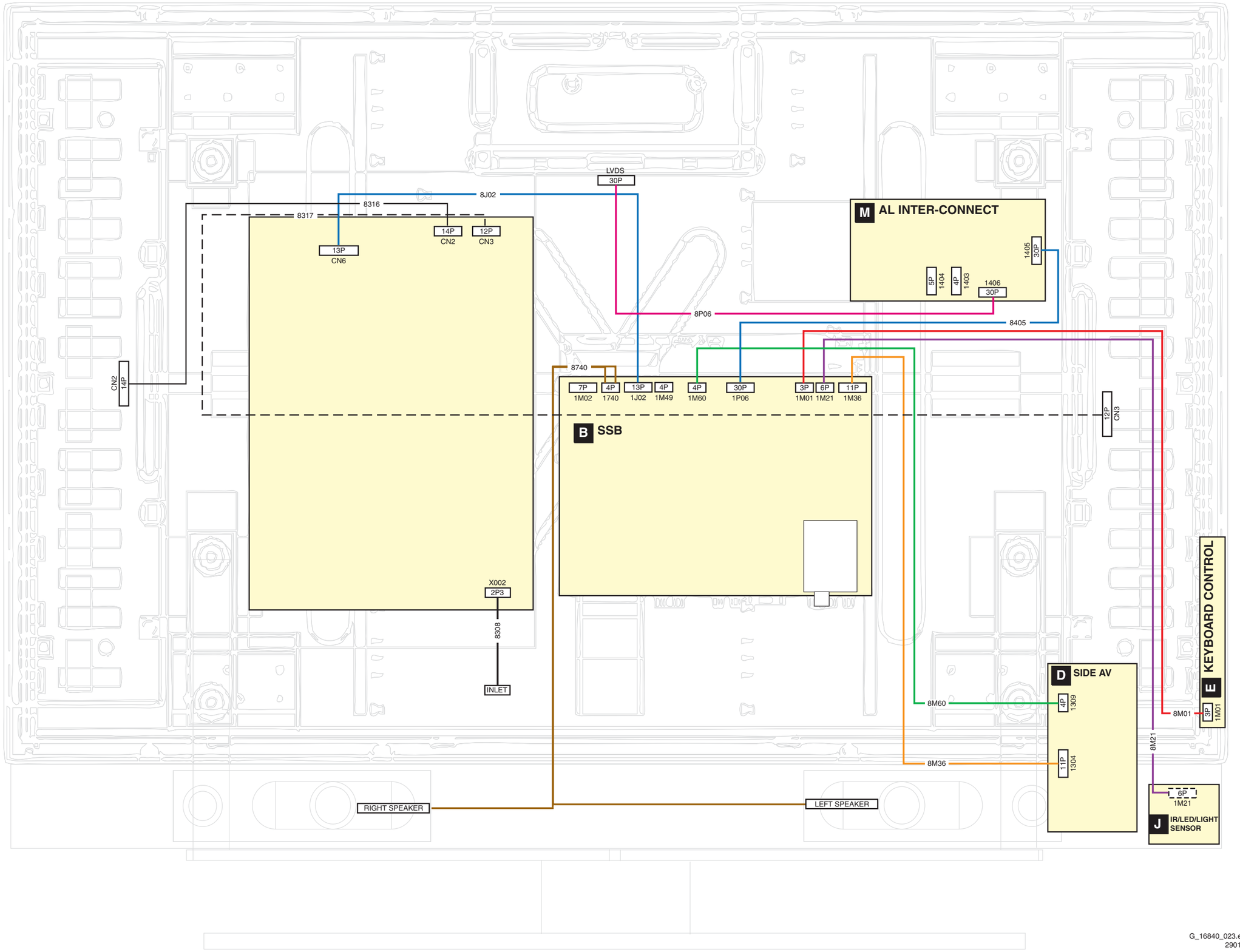

G_16840_023.eps
290107

Block Diagram Video

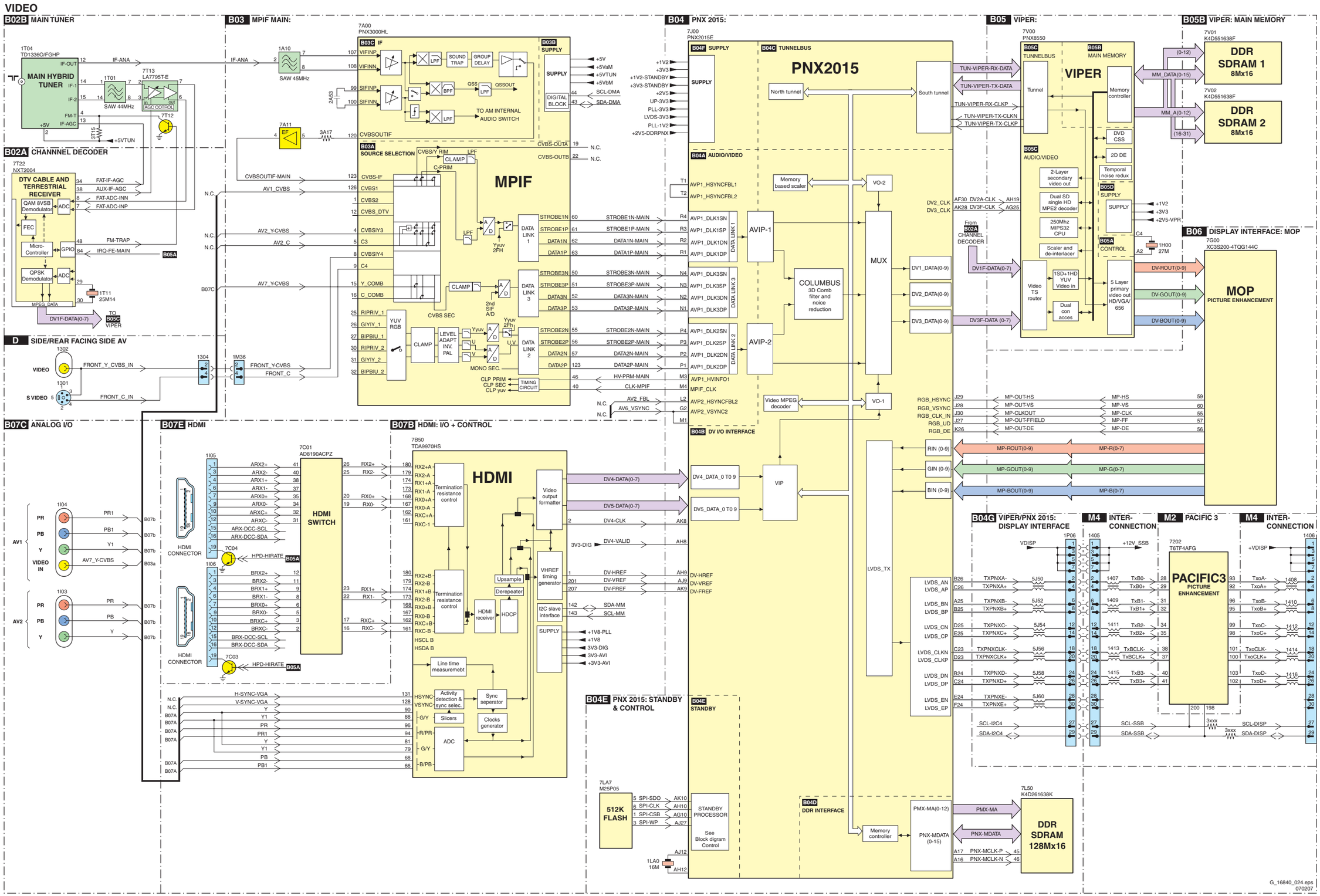

Block Diagram Audio

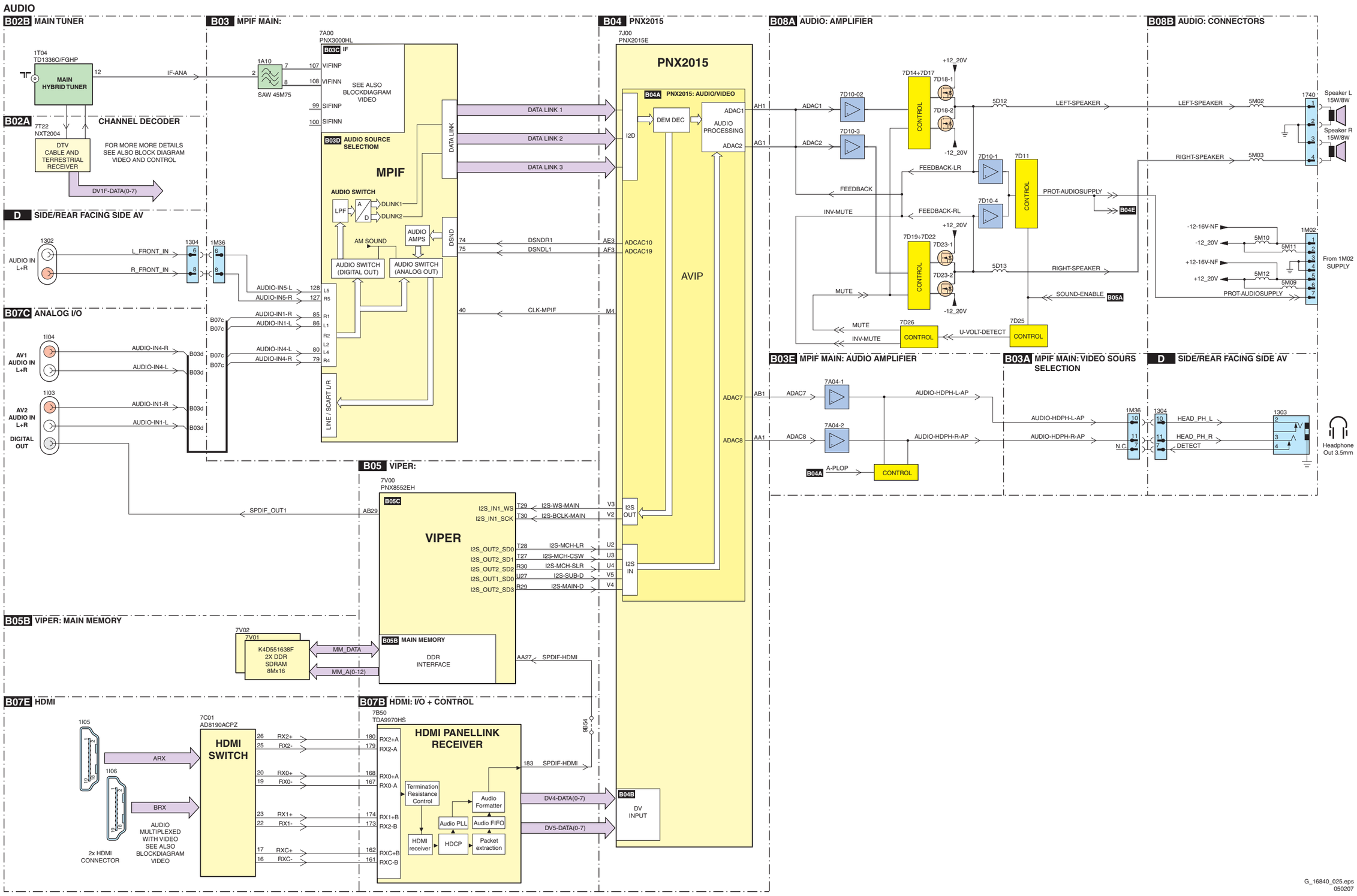

G_16840_025.eps
050207

Block Diagram Control & Clock Signals

CONTROL + CLOCK SIGNALS

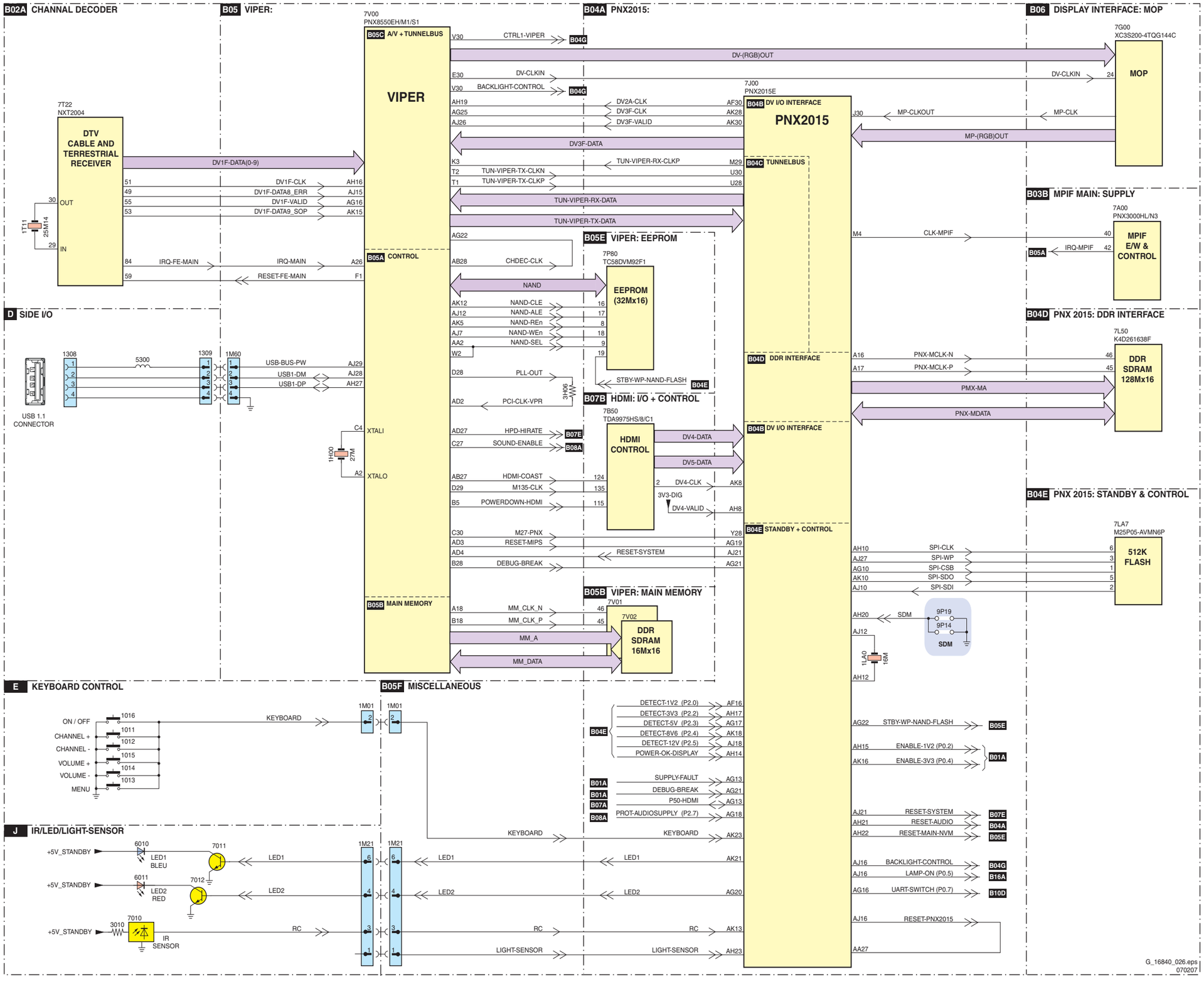

Test Point Overview SSB (Overview Top Side)

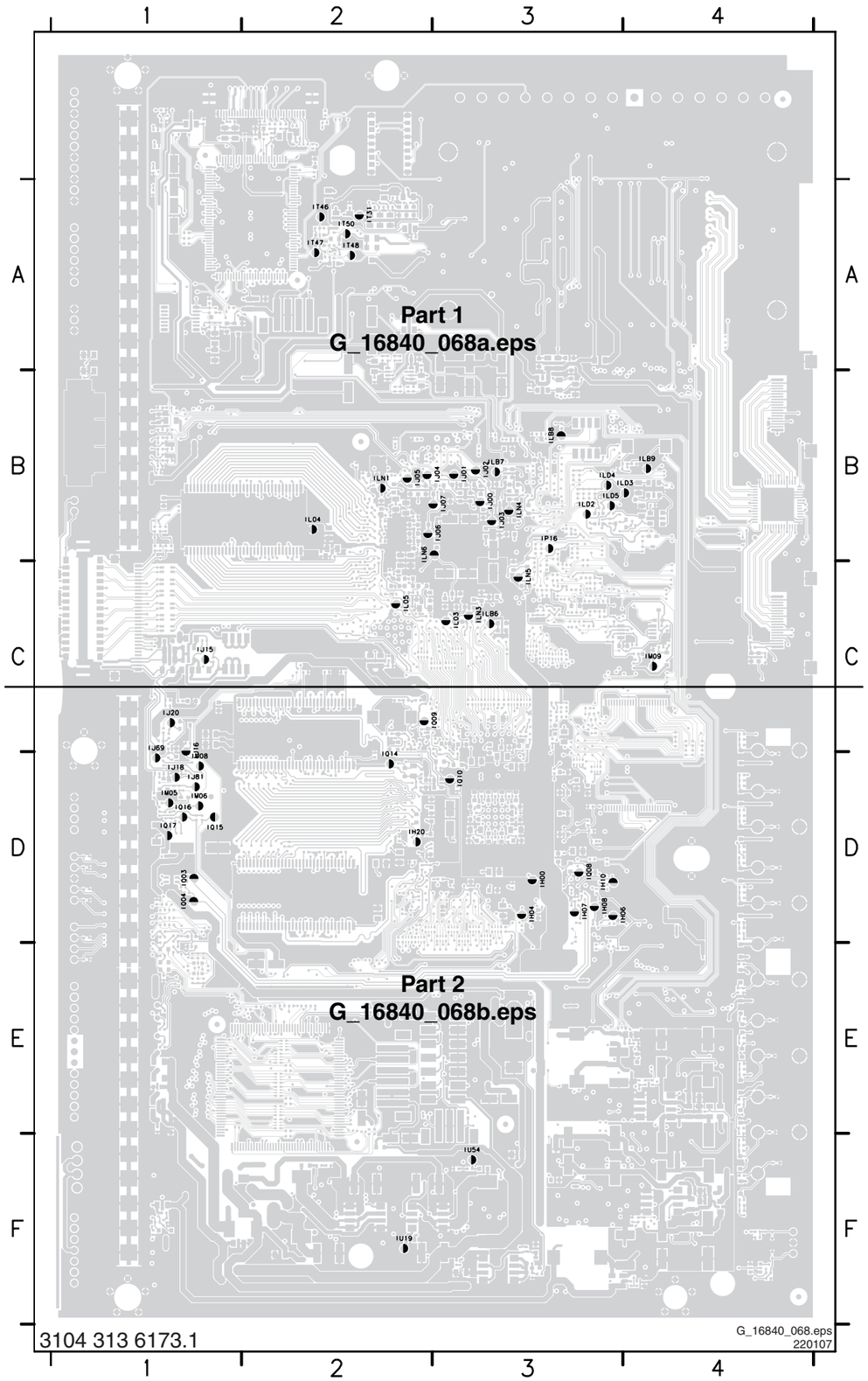

A1	E2	IQ08	D3
F37	B2	IQ08	D3
I293	D3	IQ09	C2
I303	B3	IQ09	C3
I304	B2	IQ10	D3
I305	B2	IQ14	D2
I306	B3	IQ14	D2
I307	D3	IQ15	D1
I326	D1	IQ16	D1
I327	B3	IQ17	D1
I329	D1	IQ17	D1
I331	B3	IT31	A2
I386	A2	IT31	A2
I387	A2	IT46	A2
I388	D1	IT46	A2
I389	D1	IT47	A2
I390	D3	IT47	A2
I391	D1	IT48	A2
I392	D1	IT50	A2
I393	D1	IU19	F2
I394	B3	IU19	F2
I395	B4	IU54	F3
I396	D1	IU54	F3
IH00	D3		
IH00	D3		
IH04	D3		
IH06	D3		
IH06	D3		
IH07	D3		
IH08	D3		
IH08	D3		
IH10	D3		
IH10	D3		
IH20	D2		
IH20	D2		
IJ00	B3		
IJ00	B3		
IJ01	B3		
IJ02	B3		
IJ02	B3		
IJ03	B3		
IJ04	B2		
IJ04	B3		
IJ05	B2		
IJ06	B3		
IJ07	B3		
IJ15	C1		
IJ15	C1		
IJ15	C1		
IJ16	C1		
IJ16	C1		
IJ18	D1		
IJ20	C1		
IJ20	C1		
IJ69	C1		
IJ69	D1		
IJ81	D1		
IL03	C3		
IL03	C3		
IL04	B2		
IL04	B2		
IL05	C2		
IL05	C2		
ILB6	C3		
ILB6	C3		
ILB7	B3		
ILB7	B3		
ILB8	B3		
ILB8	B3		
ILB9	B4		
ILB9	B4		
ILD2	B3		
ILD2	B3		
ILD3	B4		
ILD4	B3		
ILD4	B3		
ILD5	B3		
ILN1	B2		
ILN1	B2		
ILN3	C3		
ILN3	C3		
ILN4	B3		
ILN4	B3		
ILN5	C3		
ILN5	C3		
ILN6	B2		
IM05	D1		
IM06	D1		
IM08	D1		
IM09	C4		
IM09	C4		
IP16	B3		
IP16	B3		
IQ03	D1		
IQ04	D1		
IQ04	D1		

Personal Notes:

E_06532_012.eps
131004

Test Point Overview SSB (Part 1 Top Side)

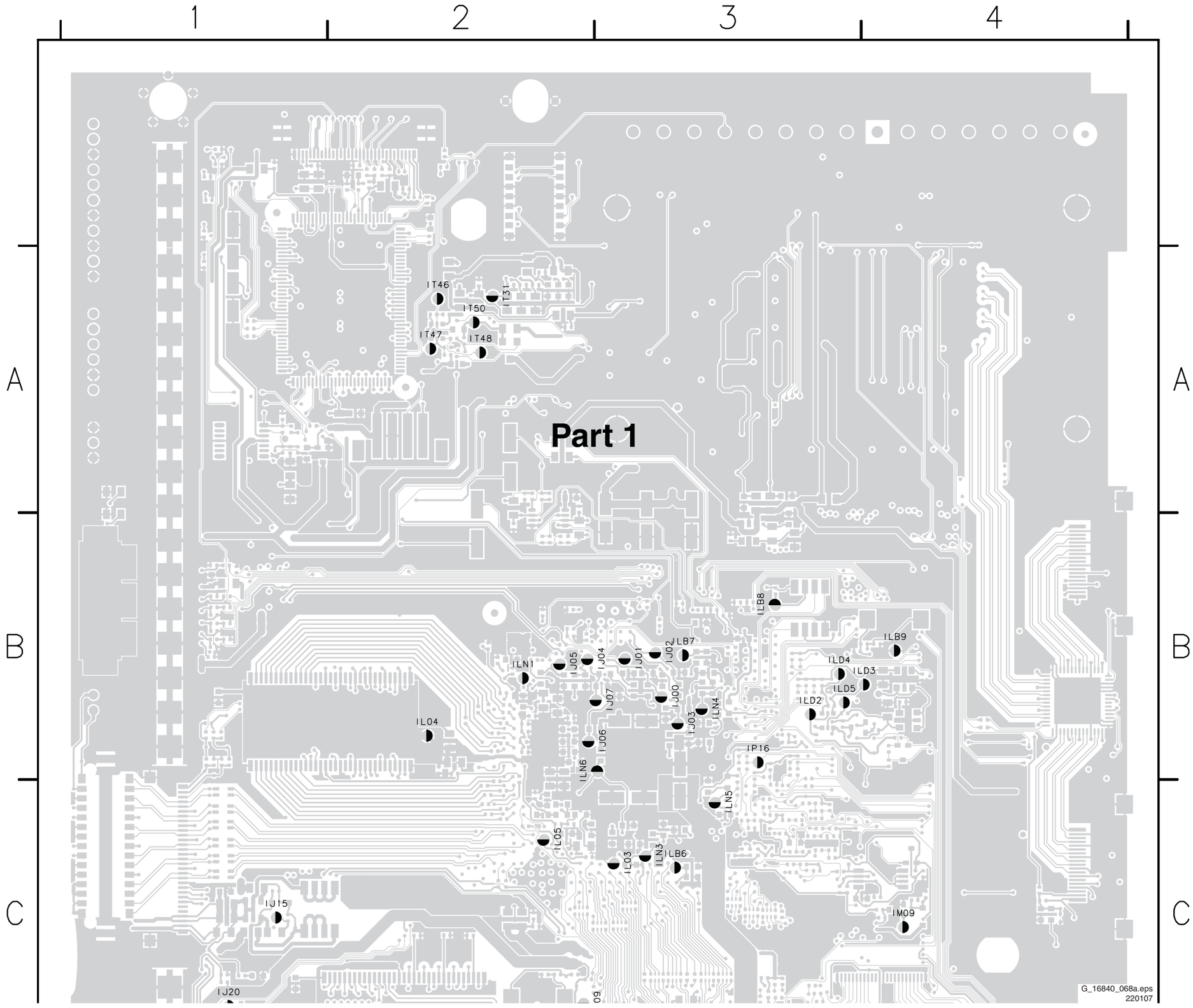

Test Point Overview SSB (Part 2 Top Side)

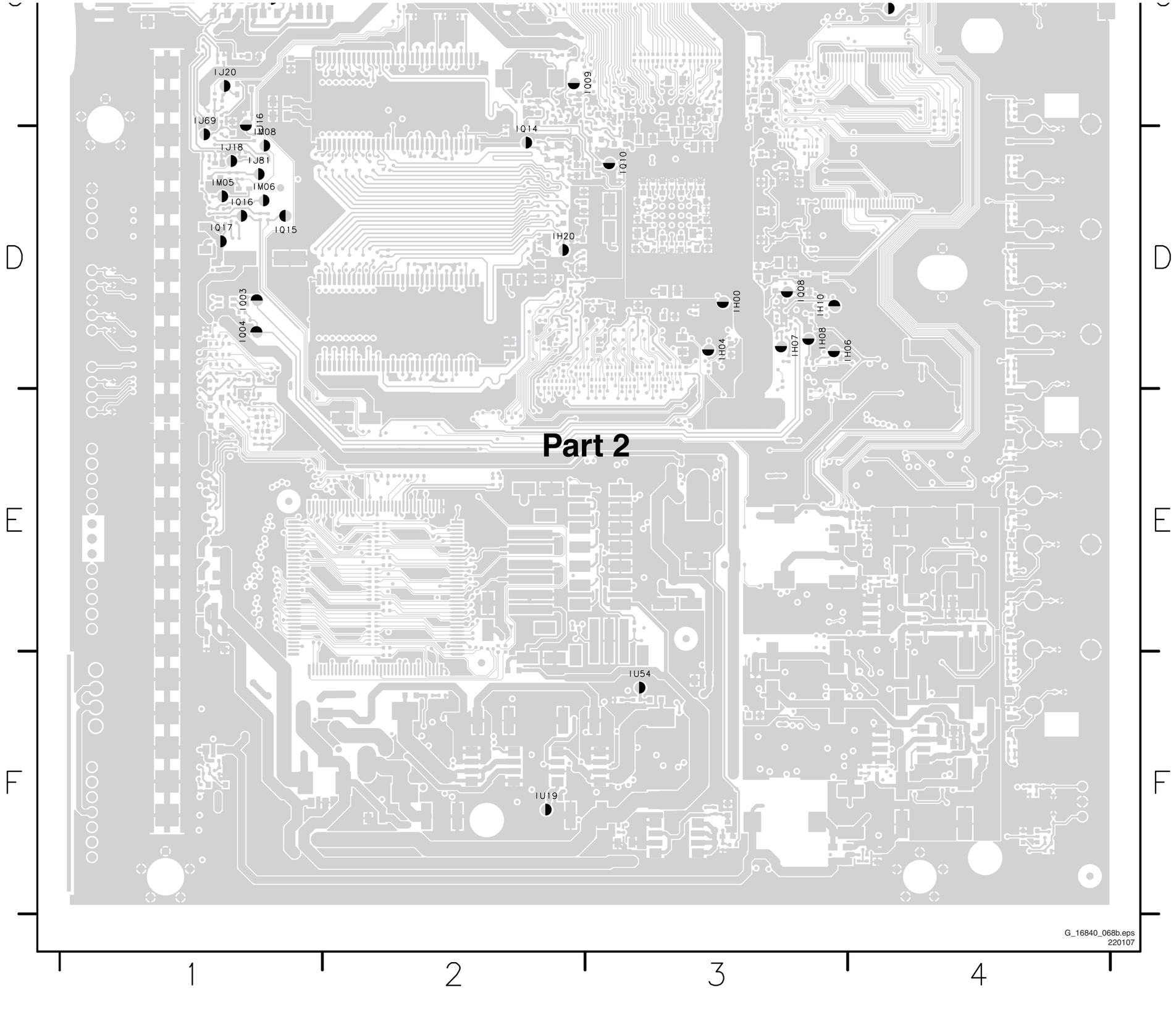

Test Point Overview SSB (Overview Bottom Side)

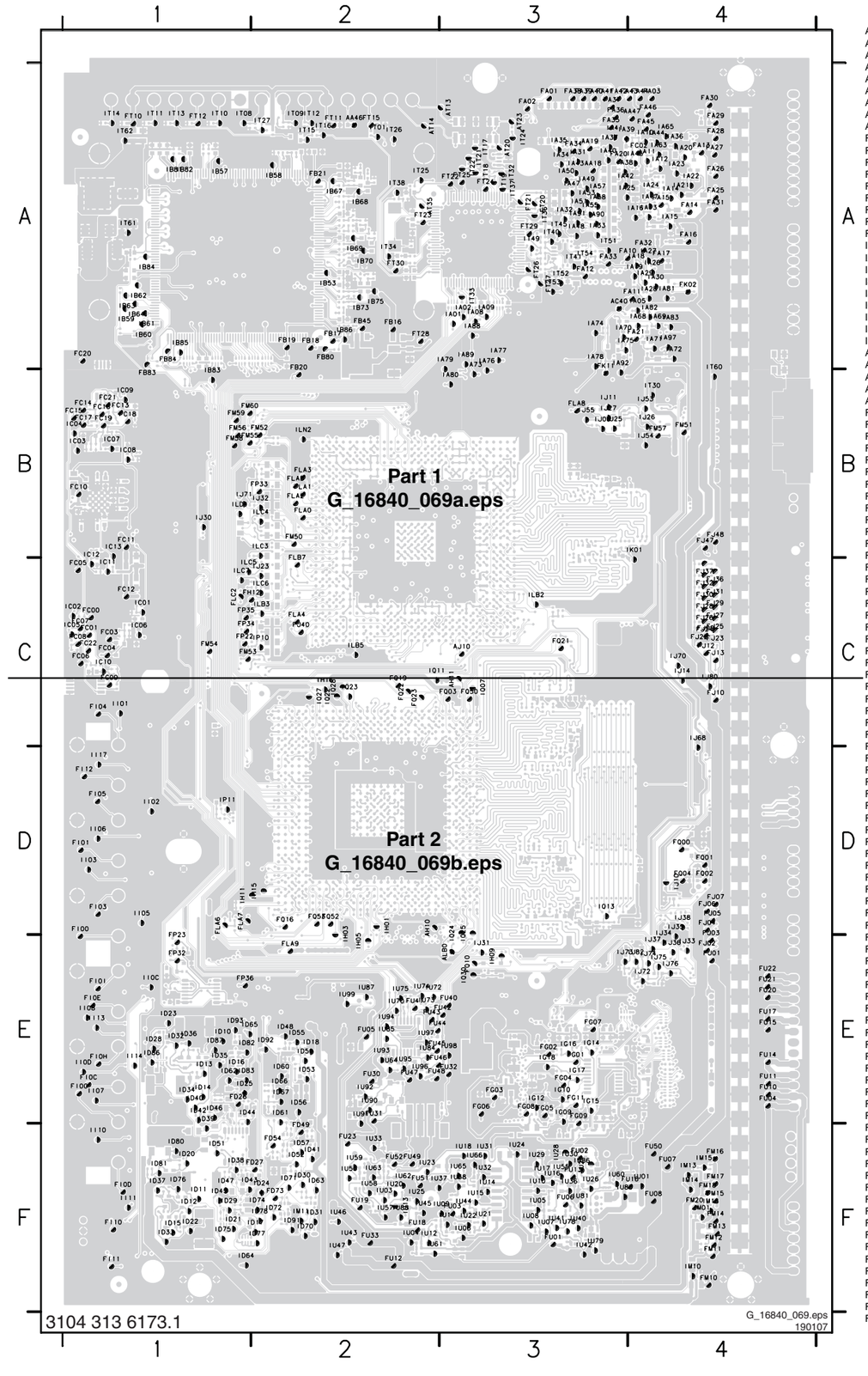

A1	E3	F87	E4	AH11	C3	F201	E3	FG02	E3	FT12	A1	I157	A3	I266	F2	I385	A4	IC09	B1	IJ27	B3	IU22	F3
A2	A3	F88	E4	AJ10	C3	F202	E3	FG03	E3	FT15	A2	I158	A2	I267	E1	I397	A4	IC10	C1	IJ30	B1	IU23	F2
A3	A2	F89	A2	ALB0	E3	F203	E3	FG04	E3	FT20	A3	I159	A3	I268	E1	I398	A4	IC11	C1	IJ31	E3	IU24	F3
A4	A3	F90	A3	AT13	A3	F204	E3	FG05	E3	FT21	A3	I160	A3	I269	E1	I399	A4	IC12	B1	IJ32	B2	IU25	F2
A5	A3	F91	A2	AT14	A2	F205	E3	FG06	E3	FT22	A3	I161	A2	I270	E1	I400	A4	IC13	B1	IJ33	E4	IU26	F3
A6	A2	F92	A3	AT20	A3	F206	E3	FG07	E3	FT23	A2	I162	A3	I271	F2	I401	A4	ID10	E1	IJ34	D4	IU27	F3
A7	A3	F93	A3	AT23	A3	F207	E3	FG08	E3	FT24	A3	I163	A3	I272	F2	IA01	A3	ID11	F1	IJ35	D4	IU28	F3
A8	A4	F94	A3	AT35	A2	F208	F2	FG09	E3	FT25	A3	I164	A2	I273	F1	IA02	A3	ID12	F1	IJ36	E4	IU29	F3
A9	A3	F95	A3	F100	A2	F209	F2	FG11	E3	FT26	A3	I165	A2	I274	F1	IA05	A4	ID13	E1	IJ37	E4	IU30	F3
F1	F2	F96	A2	F101	A1	F210	F2	FH12	C2	FT27	A3	I166	A2	I275	F2	IA08	A3	ID14	E1	IJ38	D4	IU31	F3
F2	F2	F97	A3	F102	A2	F211	F2	FI00	D1	FT28	A2	I167	A3	I276	F2	IA09	A3	ID15	F1	IJ53	B4	IU32	F3
F3	F4	F98	A3	F103	A1	F212	E1	FI01	D1	FT29	A3	I168	A3	I277	F2	IA10	A4	ID16	E1	IJ54	B4	IU33	F2
F4	F2	F99	A3	F104	D2	F213	C1	FI03	D1	FT30	A2	I169	A2	I278	F2	IA11	A4	ID17	F2	IJ55	B3	IU36	F3
F5	E2	I10	E2	F105	D2	F214	B1	FI04	C1	FU01	F3	I170	A2	I279	E2	IA12	A4	ID18	E2	IJ68	C4	IU37	F2
F6	E2	I11	E2	F106	C3	F215	A1	FI05	D1	FU02	F3	I171	A1	I280	E2	IA13	A4	ID20	F1	IJ70	C4	IU40	F3
F7	E2	I12	E2	F107	C2	F216	B1	FI0C	E1	FU03	F3	I172	A1	I281	E1	IA14	A4	ID21	F1	IJ71	B1	IU41	F3
F8	E2	I13	E2	F108	C2	F217	B1	FI0D	F1	FU04	E4	I173	A2	I282	F1	IA15	A4	ID22	F1	IJ72	E4	IU42	F3
F9	E2	I14	F2	F109	C3	F218	A4	FI0E	E1	FU05	E2	I174	A1	I283	F2	IA16	A4	ID23	E1	IJ73	E3	IU43	F2
I1	D1	I15	E2	F110	C2	F219	A4	FI0G	E1	FU06	F3	I175	A1	I284	E1	IA17	A4	ID24	F2	IJ74	E4	IU44	F3
I2	F3	I16	F1	F111	D2	F220	A4	FI0H	E1	FU07	F4	I176	E3	I285	E2	IA18	A4	ID25	E1	IJ75	E4	IU45	F2
I3	F3	I17	F2	F112	E3	F221	A4	FI0I	E1	FU08	F4	I177	C2	I286	E2	IA19	A4	ID28	E1	IJ76	E4	IU46	F2
I4	F3	I18	E2	F113	D4	F222	A3	FI10	F1	FU10	E4	I178	C2	I287	F2	IA20	A4	ID29	F1	IJ80	C4	IU47	F2
I5	F3	I19	F3	F114	C3	F223	A3	FI11	F1	FU11	E4	I179	D3	I288	E2	IA21	A4	ID30	F2	IJ82	E4	IU55	F3
I6	E2	I20	E2	F115	D4	F224	A3	FI12	D1	FU12	F2	I180	D3	I289	E2	IA22	A4	ID31	F2	IK01	B4	IU56	F2
I7	E3	I21	E2	F116	D4	F225	A3	FJ01	E4	FU13	F3	I181	C2	I290	E2	IA23	A4	ID32	E1	ILB2	C3	IU57	F2
I8	E2	I22	F1	F117	D4	F226	A3	FJ02	E4	FU14	E4	I182	C2	I291	F2	IA24	A4	ID33	F1	ILB3	C2	IU58	F2
I9	E2	I23	F1	F118	E1	F227	A3	FJ03	D4	FU15	E4	I183	D3	I292	F1	IA25	A3	ID34	E1	ILB5	C2	IU59	F2
A10	A3	I24	E2	F119	C1	F228	A3	FJ04	D4	FU16	F4	I184	C2	I294	E2	IA26	A4	ID35	E1	ILC3	B2	IU60	F3
A11	A2	I25	F3	F120	C1	F229	A3	FJ05	D4	FU17	E4	I185	C3	I295	E2	IA27	A4	ID36	E1	ILC4	B2	IU61	F2
A12	C3	I26	F3	F121	B2	F230	A3	FJ06	D4	FU18	F2	I186	D1	I296	F1	IA28	A4	ID37	F1	ILC5	C1	IU62	F2
A13	C3	I27	F3	F122	E1	F231	A4	FJ07	D4	FU19	F2	I187	C2	I297	E1	IA29	A4	ID38	F1	ILC6	C2	IU63	F2
A14	D2	I28	E2	F123	E1	F232	A4	FJ09	C4	FU20	E4	I188	F4	I298	E1	IA30	A4	ID39	E1	ILC7	C1	IU64	E2
F10	E2	I29	F2	F124	C1	F233	A4	FJ10	C4	FU21	E4	I189	F4	I299	F1	IA31	A3	ID40	E1	ILD1	B1	IU65	F3
F11	E3	I30	F2	F125	B1	F234	A4	FJ12	C4	FU22	E4	I190	F4	I300	E1	IA32	A3	ID41	F2	ILN2	B2	IU66	F3
F12	E2	I31	F2	F126	B1	F235	A4	FJ13	C4	FU23	F2	I191	F4	I301	E1	IA33	A3	ID42	E1	IM01	F4	IU68	F3
F13	E3	I32	F3	F127	B1	FA01	A3	FJ22	C4	FU30	E2	I192	F2	I302	F1	IA34	A3	ID43	F1	IM10	F4	IU70	E2
F14	F2	I33	F2	F128	B4	FA02	A3	FJ23	C4	FU31	E2	I193	F4	I308	F1	IA35	A3	ID44	E1	IM11	F2	IU72	E2
F15	F4	I34	F2	F129	B1	FA03	A4	FJ24	C4	FU32	E3	I194	F4	I309	F1	IA36	A4	ID45	F1	IM13	F4	IU73	E2
F16	E2	I35	F2	F130	B1	FA10	A3	FJ25	C4	FU33	F2	I195	B2	I310	E1	IA37	A3	ID46	E1	IM14	F4	IU74	E2
F17	E2	I36	F2	F131	C1	FA11	A4	FJ26	C4	FU40	E3	I196	B1	I311	F1	IA38	A3	ID47	F1	IM15	F4	IU75	E2
F18	F2	I37	F3	F132	C1	FA12	A3	FJ27	C4	FU41	E2	I197	C1	I312	E1	IA39	A3	ID48	E2	IM16	F4	IU78	F3
F19	E4	I38	F2	F133	B2	FA13	A4	FJ28	C4	FU42	E3	I198	C2	I313	F2	IA40	A3	ID50	E2	IP10	C2	IU79	F3
F20	F4	I39	E1	F134	B4	FA14	A4	FJ29	C4	FU43	E2	I199	C1	I314	F1	IA41	A3	ID51	F1	IP11	D1	IU80	F3
F21	E4	I40	E1	F135	B2	FA15	A4	FJ30	C4	FU44	E2	I200	B2	I315	E1	IA42	A3	ID52	F2	IQ07	C3	IU81	F3
F22	F2	I41	F2	F136	F4	FA16	A4	FJ31	C4	FU45	E2	I201	B2	I316	E1	IA43	A3	ID53	E2	IQ11	C2	IU84	E2
F23	F2	I42	F2	F137	F4	FA17	A4	FJ32	C4	FU46	E2	I202	C2	I317	F1	IA44	A4	ID55	E2	IQ13	D3	IU85	E2
F24	E4	I43	F2	F138	F4	FA20	A3	FJ36	C4	FU47	E2	I203	C2	I318	F1	IA45	A4	ID56	E2	IQ22	C2	IU86	F3
F25	F4	I44	F2	F139	F4	FA21	A4	FJ37	C4	FU48	E2	I204	C3	I319	F1	IA47	A3	ID57	F2	IQ23	C2	IU87	E2
F26	E4	I45	F3	F140	F4	FA25	A4	FJ40	C2	FU49	F2	I205	C4	I320	E2	IA48	A3	ID60	E2	IQ24	D3	IU88	F2
F27	E4	I46	F2	F141	F4	FA26	A4	FJ47	B4	FU50	F4	I206	E4	I321	F2	IA49	A3	ID61	E2	IQ25	D3	IU90	E2
F28	F3	I47	F3	F142	F4	FA27	A4	FJ48	B4	FU51	F2	I207	C4	I322	E1	IA50	A3	ID62	E1	IQ27	C2	IU91	E2
F29	F2	I48	F3	F143	F4	FA28	A4	FK02	A4	FU52	F2	I208	E4	I323	F1	IA51	A3	ID63	F2	IQ28	C2	IU92	E2
F30	E4	I49	F3	F144	C1	FA29	A4	FK11	A3	I100	A2	I209	E4	I324	E1	IA53	A3	ID64	F1	IQ30	E3	IU93	E2
F31	E4	I50	A4	F145	C2	FA30	A4	FLA0	B2	I101	A1	I210	E4	I325	E1	IA55	A3	ID65	E1	IT01	A2	IU94	E2
F32	A3	I51	F2	F146	E2	FA31	A4	FLA1	B2	I102	A1	I211	E3	I328	F1	IA57	A3	ID66	E2	IT08	A1	IU95	E2
F33	F4	I52	F3	F147	B3	FA32	A4	FLA2	B2	I103	B1	I212	E4	I330	F1	IA58	A3	ID67	E2	IT09	A2	IU96	E2
F34	F4	I53	F3	F148	D1	FA33	A3	FLA3	B2	I104	A1	I213	B1	I332	E1	IA63	A4	ID70	F2	IT10	A1	IU97	E2
F35	F3	I54	F3	F149	D1	FA34	A3	FLA4	C2	I105	A1	I214	C4	I333	C1	IA65	A4	ID71	F2	IT11	A1	IU98	E3
F36	E2	I55	F3	F150	B2	FA35	A3	FLA5	B2	I106	A2	I215	D4	I334	B1	IA68	A4	ID72	F2	IT12	A2	IU99	E2
F37	B3	I56	F3	F151	C2	FA36	A3	FLA6	D1	I107	A2	I216	B3	I335	A3	IA69	A4	ID74	F2	IT13	A1		
F38	F3	I57	F3	F152	B2	FA37	A3	FLA7	D1	I108	A2	I217	B4	I336	A3	IA70	A3	ID75	F1	IT14	A1		
F39	F3	I58	F3	F153	B2	FA38	A3	FLA8	B3	I109	A2	I218	B4	I337	A4	IA71	A4	ID76	F1	IT15	A2		
F40	F3	I59	F3	F154	B2	FA39	A3	FLA9	E2	I110	A2	I219	D4	I338	A4	IA72	A4	ID77	F2	IT16	A2		
F41	A4	I60	F2	F155	B2	FA40	A3	FLB7	B2	I111	A2	I220	E4	I339	A4	IA73	A3	ID78	F2	IT17	A3		
F42	A4	I61	F3	F156	B4	FA41	A3	FLC2	C1	I112	A1	I221	E4	I340	B3	IA74	A3	ID80	F1	IT18	A3		
F43	A1	I62	F2	F157	B4	FA42	A3	FM10	F4	I113	A1	I222	E4	I341	B3	IA75	A3	ID81	F1	IT19	A3		
F44	A4	I63	F3	F158	C2	FA43	A4	FM11	F4	I114	A1	I223	E4	I342	A3	IA76	A3	ID82	E1	IT21	A3		
F45	A3	I64	F3	F159	C4	FA44	A4	FM12	F4	I115	A1	I224	E4	I343	B3	IA77	A3	ID83	E1	IT22	A3		
F46	A4	I65	F2	F160	C4	FA45	A4	FM13	F4	I116	A1	I225	B2	I344	A3	IA78	A3	ID86	E1	IT24	A3		
F47	A4	I66	F3	F161	C4	FA46	A4	FM14	F4	I117	A1	I226	E3	I345	B3	IA79	A3	ID87	E1	IT25	A2		
F48	A4	I67	F3	F162	C4	FB16	A2	FM15	F4	I118	A2	I227	B1	I346	A4	IA80	B3	ID91	F2	IT26	A2		
F49	A4	I68	F3	F163	C4	FB17	A2	FM16	F4	I119	A1	I228	B3	I347	A4	IA81	A4	ID92	E2	IT27	A2		
F50	A4	I69	F3	F164	C4	FB18	A2	FM17	F4	I120	E1	I229	B4	I348	A3	IA82	A4	ID93	E1	IT30	B4		
F51	A4	I70	F3	F165	C4	FB19	A2	FM18	F4	I121	C1	I230	B3	I349	A4	IA83	A4	IG09	E3	IT32	A3		
F52	A4	I71	F2	F166	C4	FB20	A2	FM20	F4	I122	A3	I231	C2	I350	A4	IA88	A3	IG10	E3	IT33	A3		
F53	A1	I72	F2	F167	C4	FB21	A2	FM50	B2	I123	A2	I232	C4	I351	A4	IA89	A3	IG12	E3	IT34	A2		
F54	A4	I73	F3	F168	C4	FB45	A2	FM51	B4	I124	B1	I233	B3	I352	A3	IA90	A3	IG14	E3	IT36	A3		
F55	A3	I74	F3	F169	C4	FB80	A2	FM52	B2	I125	C1	I234	D4	I353	A3	IA91	A3	IG15	E3	IT37	A3		
F56	A2	I75	F3	F170	C4	FB83	B1	FM53	C1	I126	C1	I235	B3	I354	A3	IA92	A3	IG16	E3	IT38	A2		
F57	A2	I76	F3	F171	C4	FB84	A1	FM54	C1	I127	A4	I236	E1	I355	A3	IA97	A4	IG17	E3	IT40	A3		
F58	A2	I77	F3	F172	C4	FC00	C1	FM55	B1	I128	B3	I237	E1	I356	A3	IB53	A2	IG18	E3	IT41	A3		
F59	B2	I78	F3	F173	C4	FC01	C1	FM56	B1	I129	A3	I238	F1	I357	A3	IB57	A1	IH01	D2	IT45	A3		
F60	A2	I79	F3	F174	C4	FC02	A4	FM57	B4	I130	A3	I239	F1	I358	A3	IB58	A2	IH03	D2	IT49	A3		
F61	A2	I80	F2	F175	C4	FC03	C1	FM58	B1	I131	A3	I240	E1	I359	A3	IB59	A1	IH05	E2	IT51	A3		
F62	A2	I81	F2	F176	D4	FC04	C1	FM59	B1	I132	A3	I241	E1	I360	A4	IB60	A1	IH09	E3	IT52	A3		
F63	A2	I82	F4	F177	D4	FC05	C1	FM60	B1	I133	A3	I242	E1	I361	A3	IB61	A1	IH11	D1	IT53	A3		
F64	B1	I83	A4	F178	D4	FC06	C1	FP22	C1	I134	A4	I243	E1	I362	A3	IB62	A1	IH15	D2	IT54	A3		
F65	B1	I84	A3	F179	D4	FC07	C1	FP23	D1	I135	A3	I244	D1	I363	A3	IB63	A1	IH16	C2	IT60	A4		
F66	B1	I85	B4	F180	E4	FC08	C1	FP32	E1	I136	A3	I245	D1	I364	A3	IB64	A1	II01	C1	IT61	A1		
F67	B1	I86	A3	F181	E4	FC09	C1	FP33	B2	I137	A3	I246	D1	I365	A3	IB67	A2	II02	D1	IT62	A1		
F68	B1	I87	A3	F182	E4	FC10	B1	FP34	C1	I138	A3	I247	D1	I366	A3	IB68	A2	II03	D1	IU01	F4		
F69	C1	I88	A3	F183	D1	FC11	B1	FP35	C1	I139	A3	I248	C1	I367	A4	IB69	A2	II05	D1	IU03	F2		
F70	B1	I89	A3	F184	F1	FC12	C1	FP36	E1	I140	A4	I249	C2	I368	A3	IB70	A2	II06	D1	IU04	F2		
F71	A4	I90	A2	F185	F1	FC13	B1	FQ00	D4	I141	A3	I250	D2	I369	A4	IB73	A2	II07	E1	IU05	F3		
F72	A3	I91	A1	F186	E1	FC14	B1	FQ01	D4	I142	A3	I251	D2	I370	A4	IB75	A2	II08	E1	IU06	F3		
F73	A4	I92	A2	F187	E1	FC15	B1	FQ02	D4	I143	A4	I252	E3	I371	A4	IB81	A1	II0C	E1	IU07	F3		
F74	A3	I93	B1	F188	E1	FC16	B1	FQ03	C3	I144	A3	I253	E2	I372	A4	IB82	A1	II0D	E1	IU08	F3		
F75	A3	I94	C1	F189	E1	FC17	B1	FQ04	D4	I145	A3	I254	D2	I373	A4	IB83	B1	II10	F1	IU09	F3		
F76	B1	I95	C1	F190	F1	FC18	B1	FQ10	E3	I146	F2	I255	D2	I374	A4	IB84	A1	II11	F1	IU10	F3		
F77	C1	I96	C1	F191	E1	FC19	B1	FQ16	D2	I147	F2	I256	E3	I375	A4	IB85	A1	II13	E1	IU11	F3		
F78	C1	I97	B1	F192	D1	FC20	A1	FQ19	C2	I148	A1	I257	E3	I376	A4	IB86	A2	II14	E1	IU12	F2		
F79	C1	I98	B1	F193	C1	FC21	B1	FQ21	C3	I149	A1	I258	E3	I377	A4	IC01	C1	II17	D1	IU13	F2		
F80	C1	I99	B1	F194	D1	FC22	C1	FQ22	C2	I150	B4	I259	E3	I378	E2	IC02	C1	IJ09	B3	IU14	F3		
F81	C1	AA18	A3	F195	D1	FD26	E1	FQ23	C2	I151	A3	I260	E3	I379	E2	IC03	B1	IJ10	D4	IU15	F3		
F82	C1	AA19	A3	F196	E1	FD27	F2	FQ50	C3	I152	A3	I261	E3	I380	E2	IC04	B1	IJ11	B3	IU16	F3		
F83	C1	AA46	A2	F197	C2	FD49	F2	FQ52	D2	I153	A3	I262	E3	I381	E2	IC05	C1	IJ14	C4	IU17	F3		
F84	C1	AA47	A4	F198	E3	FD54	F2	FQ53	D2	I154	A3	I263	E3	I382	A4	IC06	C1	IJ23	C2	IU18	F3		
F85	C1	AC40	A3	F199	E3	FD73	F2	FT10	A1	I155	A3	I264	E1	I383	A4	IC07	B1	IJ25	B3	IU20	F2		
F86	E3	AH10	D2	F200	E3	FG01	E3	FT11	A2	I156	A3	I265	E2	I384	A4	IC08	B1	IJ26	B4	IU21	F3		

Test Point Overview SSB (Part 1 Bottom Side)

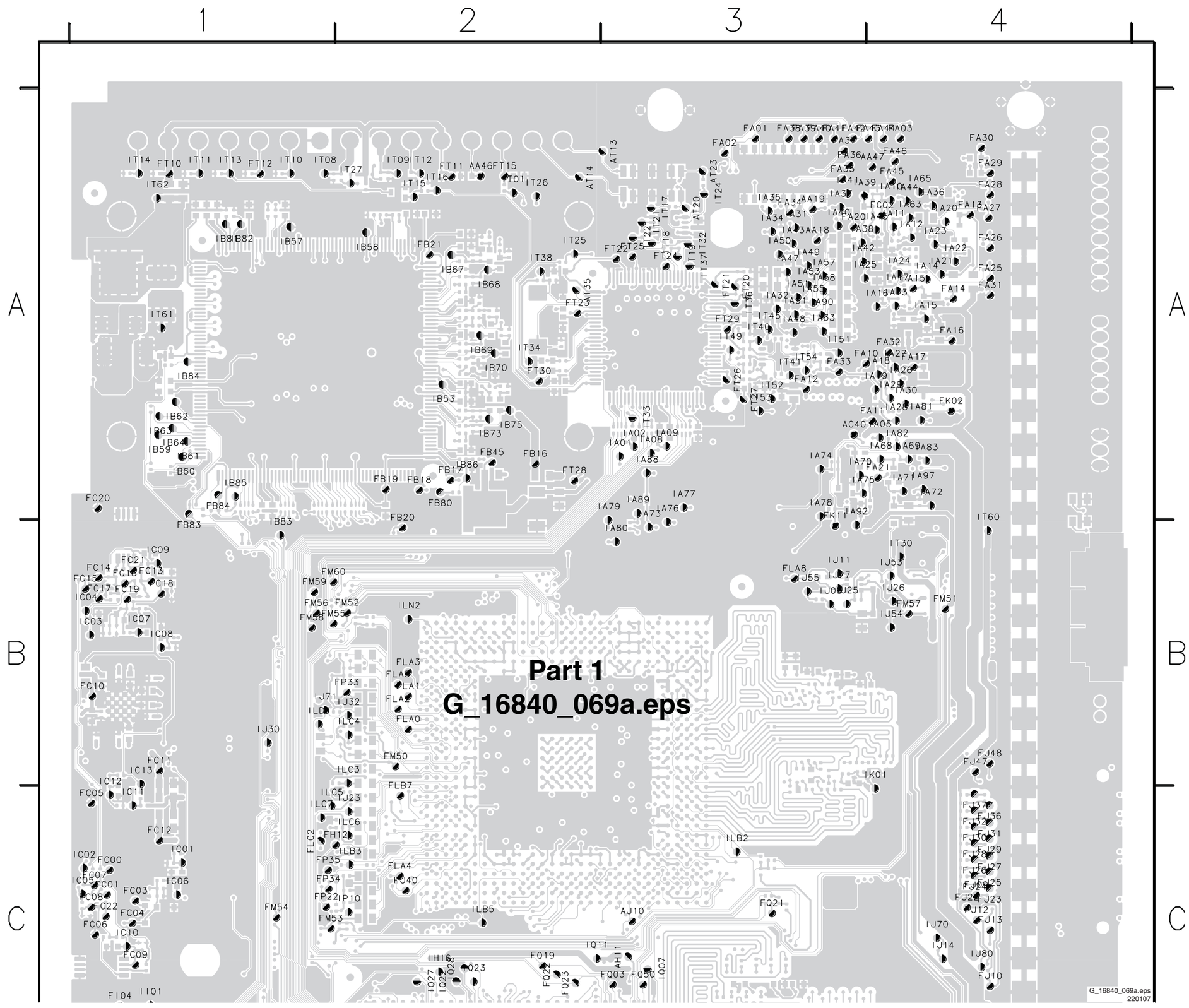

Test Point Overview SSB (Part 2 Bottom Side)

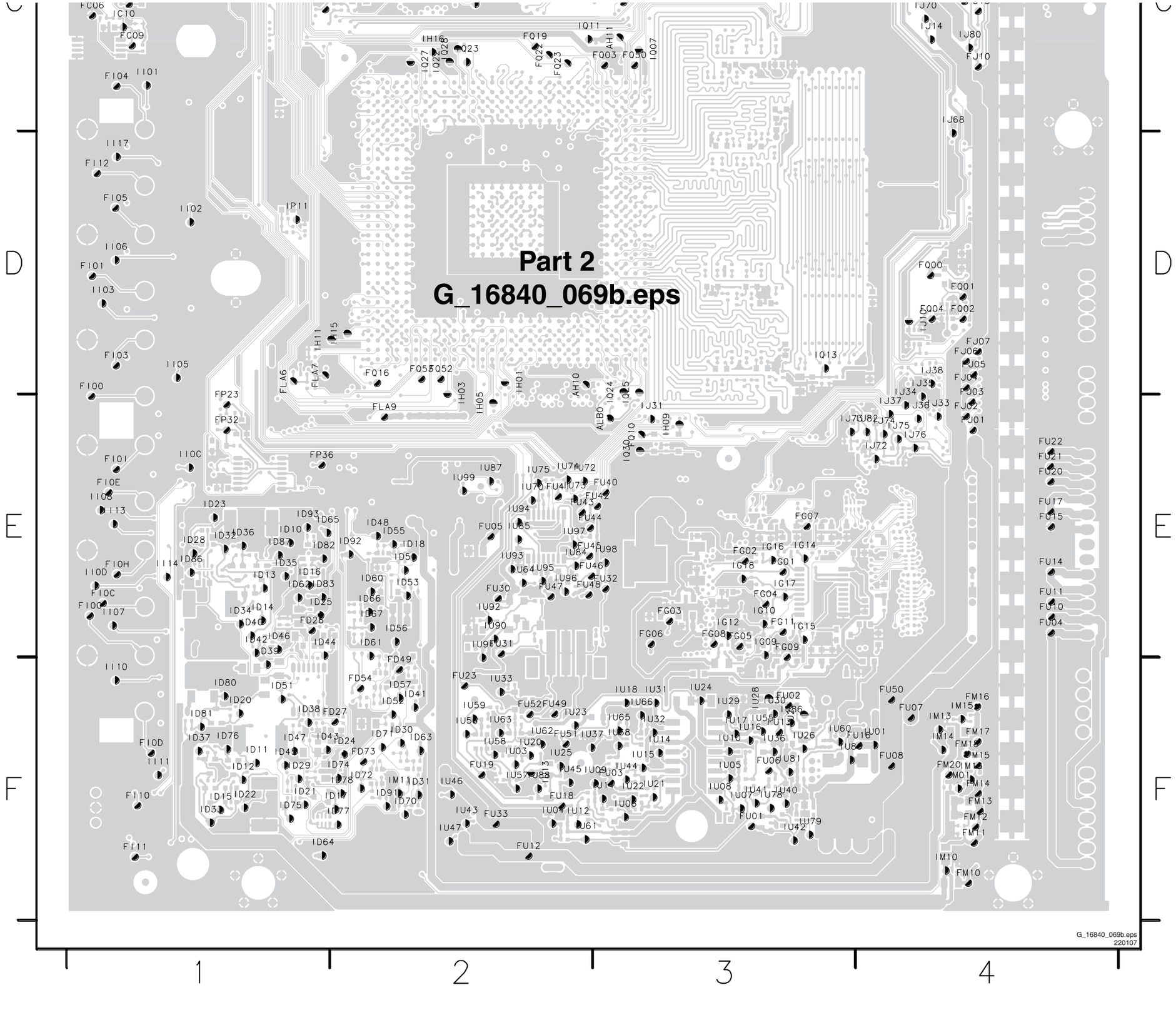

Test Point Overview AmbiLight Inter Connect Panel (Bottom Side)

F101 A2
F102 A2
F104 A2
F106 A1
F107 A2
F108 A2
F109 A2
F110 A2
F111 A2
F113 A2
F201 A2
F202 A1
F203 A1
F204 A1
F205 A1
F206 A1
F207 A1
F208 A2
F209 A2
F210 A1
F211 A2
F212 A2
F213 A2
F216 A1
F218 A1
F219 A1
F220 A1
F221 A1
F222 A1
F223 A1
F224 A1
F225 A1
F226 A1
F227 A1
F228 A1
F229 A1
F230 A1
F231 A1
F232 A1
F233 A1
F301 A1
F302 A1
F401 A3
F402 A2
F403 A2
F404 A2
F405 A2
F407 A3
F408 A2
F409 A3
F410 A2
F411 A2
F412 A2
F413 A1
F414 A3
F415 A3
F416 A3
F433 A1
F434 A1
F435 A1
F502 A3
F503 A3
F504 A3
F505 A3
F506 A3
F507 A3
F508 A3
I101 A2
I102 A2
I103 A2
I104 A2
I105 A2
I106 A2
I107 A2
I108 A2
I109 A2
I110 A2
I111 A2
I112 A2
I113 A2
I114 A2
I115 A2
I116 A2
I117 A2
I118 A2
I119 A2
I120 A2
I121 A2
I122 A2
I123 A2
I127 A2
I128 A2
I129 A2
I132 A2
I301 A1
I302 A1
I303 A1
I304 A1
I305 A1
I306 A2
I307 A2
I308 A1

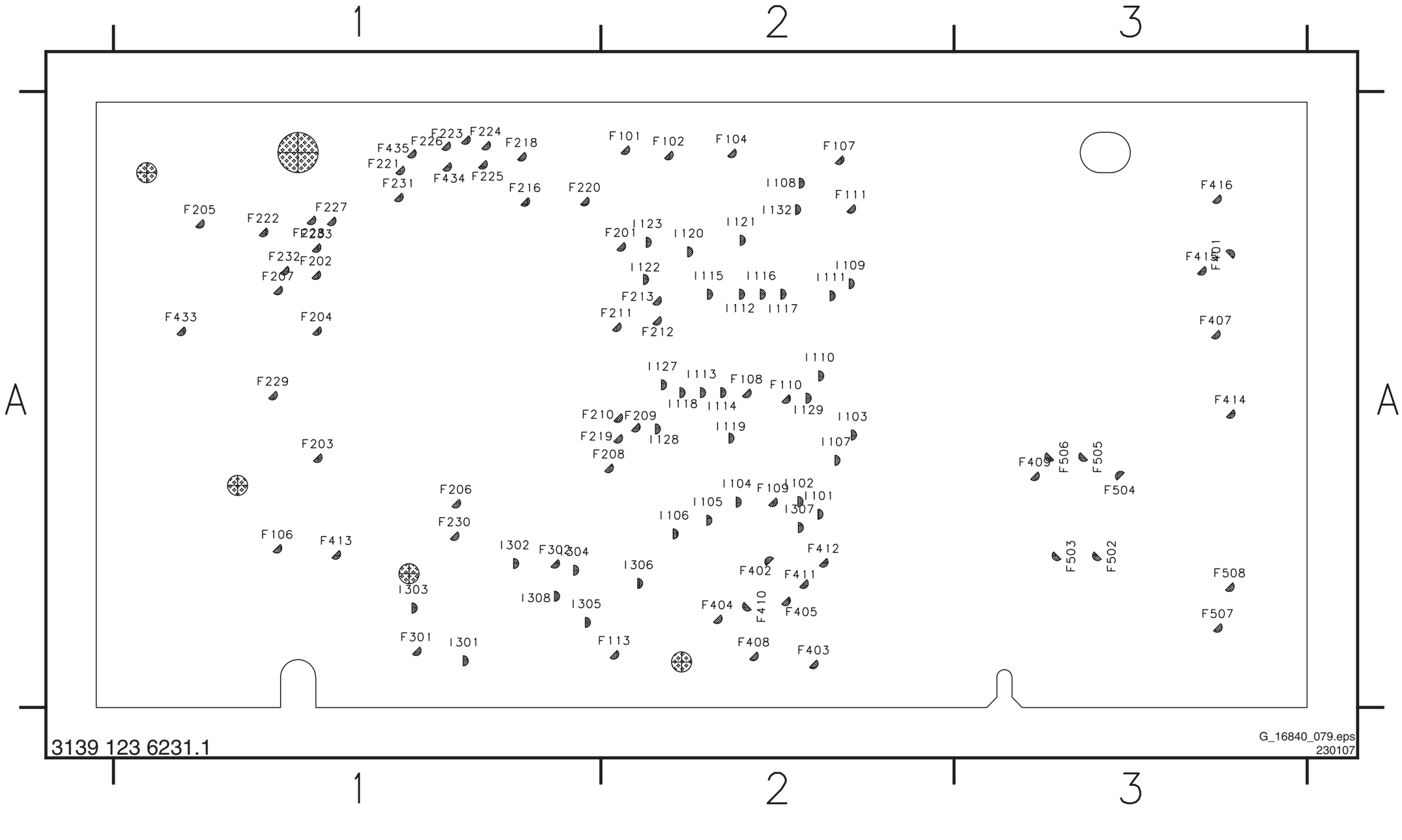

I2C IC's Overview

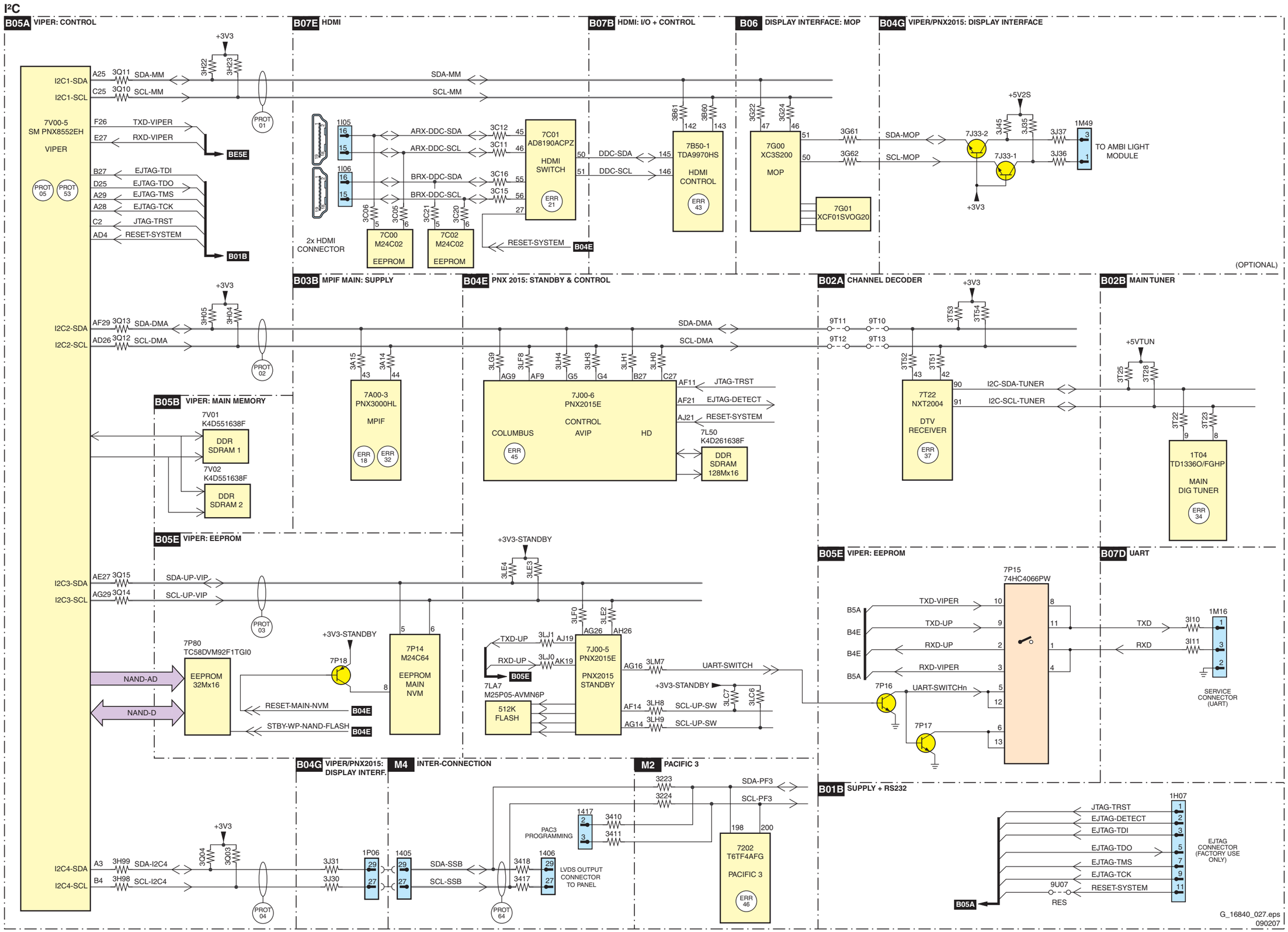

Supply Lines Overview

SUPPLY LINES OVERVIEW

SUPPLY

B01B SUPPLY + RS232
1J02
-12-16V-NF
+12-16V-NF
5U37
5U38
+12VS
5U35
5U36
+5V2-STBY
7U25 +5V
STANDBY
BACKLIGHT-CNTRL-OUT
LAMP-ON-OUT
7U24 POD-MODE
+12VSW
X220* X221*
1401 M4 AL

B01A DC / DC
+12VS
1U01
+12VSW
5U02 7U01 5U00 +3V3
7U00 Control 16
7U03 5U03 +1V2
7U28 +2V5
7U27 +2V5 STABILIZER
+2V5D

B02A CHANNEL DECODER
+2V5
5T20 +2V5D-PLL
5T21 +2V5A-PLL
5T23 +2V5A
5T24 +2V5A-XTAL
5T25 +2V5A-ADC
5T26 +2V5F
+3V3
5T27 +3V3F
+1V2
7T21 +1V2_ATSC
5T28 +1V2F
7T20 CONTROL
+3V3
+12VSW

B02B MAIN TUNER
+12SW
7T10 IN OUT COM
5T11 +5VTUN

B03A MPIF MAIN: VIDEO SOURCE SELECTOIN
+5V

B03B MPIF MAIN: SUPPLY
5A12 7A10 VREF-AUD-POS
7A00 MPIF 2
VREF-AUD

B03C MPIF MAIN: IF + SAW FILTER
5A16 +5VaM
+5VTUN
5A17 +5VbM

B03D MPIF MAIN: AUDIO SOURCE SELECTION
+5VTUN
+8V-AUD

B03E MPIF MAIN: AUDIO AMPLIFIER
+5V2-STBY
+12VSW
7A17 +8V-AUD
7A05
VREF-AUD

B04A PNX2015: AUDIO / VIDEO
+1V2
+3V3
+5V2-STBY
+12VSW
VREF-AUD-POS

B04C PNX2015: TUNNELBUS
+2V5
3L38 3L20 VREF-PNX

B04D PNX2015: DDR INTERFACE
+1V2
+2V5
5L52 +2V5-DDRPNX
5L51 3L21 VREF-DDRPNX

B04E PNX2015: STANDBY & CONTROL
+1V2
+1V2-STANDBY
+3V3
+3V3-STANDBY
+5V
+12VSW

B04F PNX2015: SUPPLY
+1V2 5LN1 PLL-1V2
+3V3 5LN3 LVDS-3V3
5LN0 PLL-3V3
+1V2-STANDBY
+3V3-STANDBY 5LN2 UP-3V3
+2V5
+2V5-DDRPNX

B04G PNX2015: DISPLAY INTERFACE
+3V3
+3V3-STANDBY
+5V
+12VSW
7J04 7J08 5J11 VDISP
7J07 CONTROL
+3V3
1P06 1

B05A VIPER: CONTROL
+3V3
+5V

B05B VIPER: MAIN MEMORY
+2V5-VPR
3H52 VREFD-VPRDDR
3H50 VREF-VPRDDR

B05C VIPER: A/V + TUNNELBUS
+3V3
VREF-PNX

B05D VIPER: SUPPLY
+1V2
+2V5
5Q07 +2V5-VPR
+3V3

B05E VIPER: EEPROM
+3V3
+3V3-STANDBY
+5V2-STBY

B05F MISCELLANEOUS
+5V2-STBY
7M05 IN OUT COM +3V3-STANDBY
7M06 IN OUT COM +1V2-STANDBY
5M00 1M21 5
1M21 J LED PANEL

B06 DISPLAY INTERFACE: MOP
+3V3
5G01 7G02 IN OUT COM +3V3M
7G03 IN OUT COM +2V5M
+1V2M

B07A HDMI + SUPPLY
+3V3
5B17 +3V3-APLL
5B11 3V3-PLL
5B12 3V3-DIG
7B25 IN OUT COM +1V8
5B18 +1V8-PLL
+5V2-STBY
7B45 IN OUT COM +3V3-AV
5B10 +3V3-AVI

B07B HDMI: I/O + CONTROL
+1V8
+1V8-PLL
+3V3
+3V3-DIG
+3V3-AVI
+3V3-PLL
+3V3-APLL

B07C ANALOG I/O
+12VSW

B07D UART
+3V3-STANDBY

B07E HDMI
+3V3
5C02 +3V3-DIG-MUX
5C03 +3V3-ANA-MUX
HDMI CONNECTOR 1105 18 AIN-5V
HDMI CONNECTOR 1106 18 BIN-5V
3C10 3C11 3C12
+5V-CON
5C04 +5V-MUX

B08B AUDIO: CONNECTORS
-12-16V-NF
+12-16V-NF
1M02
5M10 -12_20V
5M11
5M12 +12_20V
5M09
N.C.

B08A AUDIO: AMPLIFIER
+3V3-STANDBY
+12_20V
3D43 7D24 VP
-12_20V
5D16 VN

M1 DC / DC CONVERTER
+12V_BOLT-ON
5101* 5102*
+12V_SSB
5103 5104 +12V
5103
7104 5106 +3V3
7101 Control 16
7103 IN OUT COM +2V5
7105 5107 +1V5
* Only in case of Ambi-Light

M2 PACIFIC 3
+1V5
5204 +1V5_P3
5205 1V5_PLL
5206 +1V5_Tx
5207 +1V5_Rx
+2V5
5202 +2V5_P3
5203 +2V5_PLL
+3V3
5201 +3V3_P3

M3 DISPLAY INTERFACE
+12V_SSB
5301 7302 +VDISP
5302 3304 +5V
+3V3

M4 INTER-CONNECTION
+5V
+3V3
1P06 B04C SSB 1405 +12V-SSB
+VDISP
1406 1 TO DISPLAY
TO SUPPLY 1401* +12V_BOLT-ON
* Only in case of Ambi-Light

M5 DC/DC AMBI
+12V_BOLT-ON
5501* 6501* +15V
7501* DC/DC COVERT 7502*
* Only in case of Ambi-Light

J LED PANEL
1M21 5 +5V_STANDBY
1M21 B05F SSB

* Only in case of Ambi-Light

G_16840_028.eps
070207

7. Circuit Diagrams and PWB Layouts

SSB: DC/DC

0M96 H11 0M97 H12 1U01 B13 2U09 G2 2U10 G2 2U11 E6 2U12 D5 2U13 C1 2U14 A2 2U15 D3 2U16 B4 2U17 A4 2U18 C5 2U19 B7 2U20 D8 2U21 D8 2U22 D9 2U23 G2 2U24 B8 2U25 A10 2U26 E7 2U27 C7 2U28 C7 2U29 E7 2U30 E7 2U31 B5 2U32 C6 2U37 G8 2U41 F11 2U46 F12 2U58 B11 2U72 B10 2U73 E12 2U85 B8 2U86 D12 3U00 D1 3U01 D1 3U02 C2 3U03 D3 3U04 D3 3U05 C3 3U06 D4 3U07 D5 3U08 C6 3U09 D5 3U10 D5 3U12 C7 3U13 C7 3U14 E8 3U15 E8 3U16 F8 3U17 F8 3U18 D8 3U19 G9 3U20 D7 3U21 B7 3U22 A4 3U23 B5 3U24 B5 3U25 E3 3U26 E3 3U27 E3 3U28 C5 3U29 E4 3U30 E4 3U31 E3 3U32 E3 3U33 E3 3U34 B3 3U35 B3 3U37 G1 3U38 G1 3U54 D10 3U55 D9 3U56 E10 3U82 C6 3U83 C6 3U85 A2 3U86 A3 3U87 B1 3U88 B3 3U89 B1 3U93 E9 3U94 E10 3U95 E10 3U96 D6 3U97 D6 3UA1 B11 3UA2 C10 3UA3 D11 3UA4 E13 3UA5 E12 3UA7 F10 3UA8 D7 3UA9 E7 5U00 B8 5U02 A11 5U03 D8 6U11 F4 6U12 B3 6U21 F7 6U22 E6 6U23 D7 6U25 E11 7U00 B4 7U01-1 A5 7U01-2 B5 7U03-1 C6 7U03-2 B6 7U05-1 D2 7U05-2 D3 7U07 F7 7U10-1 E3 7U10-2 E4 7U13-1 B2 7U13-2 B2 7U15-1 D10 7U15-2 E9 7U27 D12 7U28 D11 7U29-1 B11 7U29-2 C10 9U03 C4 FU01 B13 FU02 C4 FU03 B7 FU05 F12 FU06 D9 FU07 E12 FU08 E12 FU13 D6 FU18 F12 FU19 G12 FU23 B3 IU01 B13 IU03 B2 IU04 C4 IU05 C4 IU06 C4 IU07 C3 IU08 D3 IU09 D3 IU10 C4 IU11 C2 IU12 D1 IU13 D5 IU14 C5 IU15 D5 IU16 C5 IU17 C5 IU18 A5 IU19 B5 IU20 B2 IU21 C7 IU22 B7 IU23 B5 IU24 B4 IU25 E6 IU26 E6 IU27 E6 IU28 E6 IU29 B5 IU30 C5 IU31 C5 IU32 C5 IU33 B3 IU34 C6 IU36 C6 IU37 E4 IU40 E8 IU41 E8 IU42 D11 IU44 F11 IU45 F11 IU54 B7 IU55 E7 IU56 D10 IU57 D10 IU58 E9 IU59 E10 IU60 E3 IU61 G2 IU62 B2 IU63 B2 IU65 E4 IU66 A7 IU68 G8 IU78 C10 IU79 C11 IU80 D11 IU81 E12 IU86 A7 IU88 G8 c111 F11

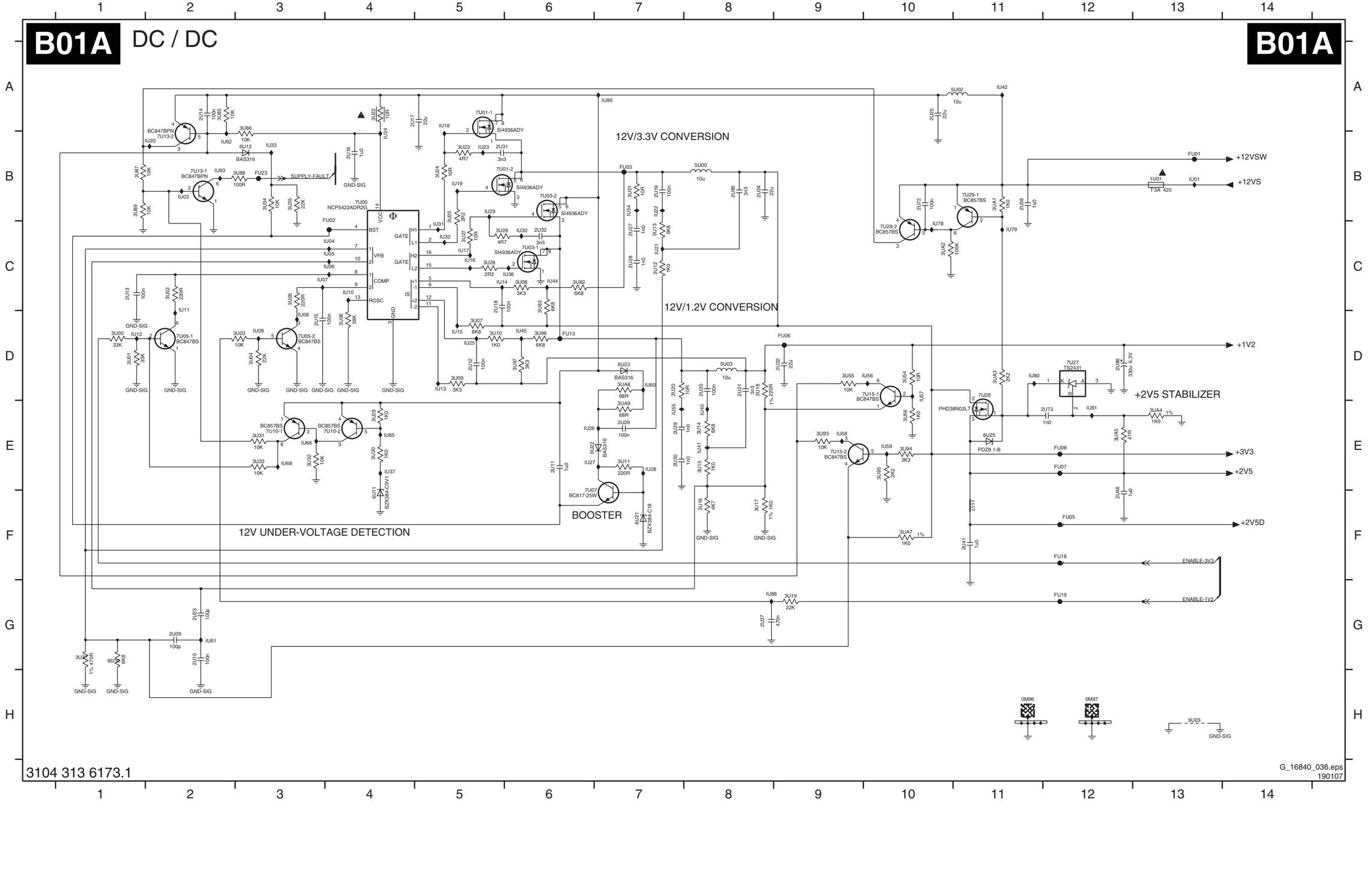

SSB: Supply & RS232

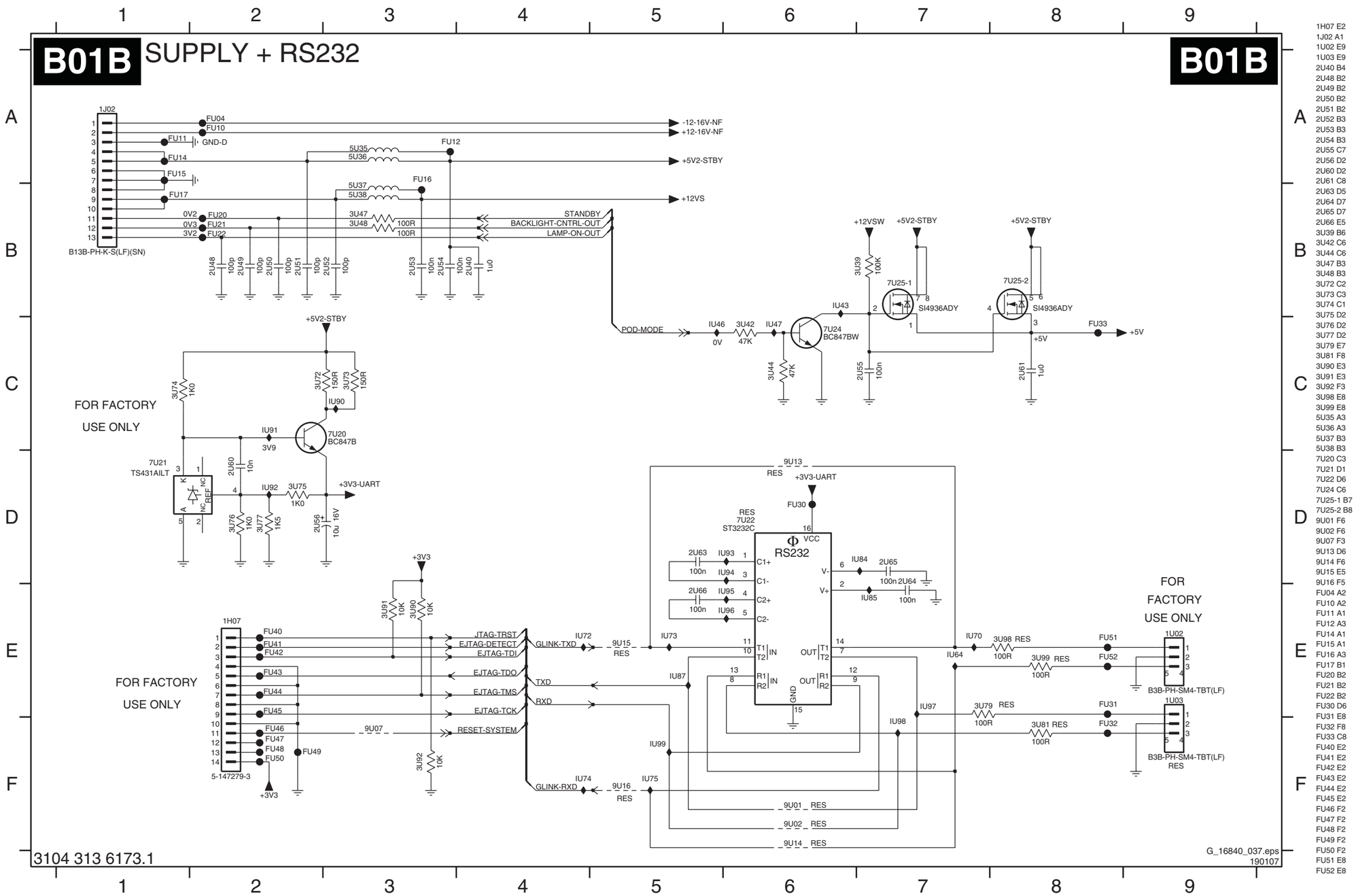

1H07 E2
1J02 A1
1U02 E9
1U03 E9
2U40 B4
2U48 B2
2U49 B2
2U50 B2
2U51 B2
2U52 B3
2U53 B3
2U54 B3
2U55 C7
2U56 D2
2U60 D2
2U61 C8
2U63 D5
2U64 D7
2U65 D7
2U66 E5
3U39 B6
3U42 C6
3U44 C6
3U47 B3
3U48 B3
3U72 C2
3U73 C3
3U74 C1
3U75 D2
3U76 D2
3U77 D2
3U79 E7
3U81 F8
3U90 E3
3U91 E3
3U92 F3
3U98 E8
3U99 E8
5U35 A3
5U36 A3
5U37 B3
5U38 B3
7U20 C3
7U21 D1
7U22 D6
7U24 C6
7U25-1 B7
7U25-2 B8
9U01 F6
9U02 F6
9U07 F3
9U13 D6
9U14 F6
9U15 E5
9U16 F5
FU04 A2
FU10 A2
FU11 A1
FU12 A3
FU14 A1
FU15 A1
FU16 A3
FU17 B1
FU20 B2
FU21 B2
FU22 B2
FU30 D6
FU31 E8
FU32 F8
FU33 C8
FU40 E2
FU41 E2
FU42 E2
FU43 E2
FU44 E2
FU45 E2
FU46 F2
FU47 F2
FU48 F2
FU49 F2
FU50 F2
FU51 E8
FU52 E8

IU43 B6
IU46 C5
IU47 C6
IU64 E7
IU70 E7
IU72 E4
IU73 E5
IU74 F4
IU75 F5
IU84 D7
IU85 E7
IU87 E5
IU90 C3
IU91 C2
IU92 D2
IU93 D6
IU94 D6
IU95 E6
IU96 E6
IU97 E7
IU98 F7
IU99 F5

SSB: Channel Decoder

B02A CHANNEL DECODER

B02A

1T10 H1
1T11 E6
2T30 A2
2T31 B2
2T33 B2
2T34 C2
2T35 D2
2T36 D8
2T37 D6
2T38 D6
2T39 D6
2T40 D6
2T41 D7
2T42 D7
2T43 D7
2T44 D7
2T45 D8
2T46 D7
2T47 D11
2T48 D12
2T49 D12
2T50 D12
2T52 E5
2T53 E5
2T54 E6
2T56 E7
2T57 E7
2T58 E6
2T59 E7
2T60 E12
2T61 F12
2T62 F7
2T63 F7
2T64 F2
2T65 G6
2T66 G7
2T67 H5
3T31 G5
3T35-1 G11
3T35-2 G12
3T35-3 G11
3T35-4 G12
3T36-1 G11
3T36-2 G12
3T36-3 G11
3T36-4 G12
3T37-1 F12
3T37-2 F12
3T37-3 F12
3T37-4 F12
3T38 G7
3T39 H7
3T40 F11
3T41 F7
3T42 F2
3T43 F11
3T44 F7
3T45 F1
3T46 F1
3T47 F2
3T48 F6
3T49 F3
3T50 F1
3T51 F6
3T52 F7
3T53 G6
3T54 G6
3T55 H2
3T56 H3
3T57 I3
3T58 I4
5T20 A2
5T21 B2
5T23 B2
5T24 C2
5T25 C2
5T26 D2
5T27 D2
5T28 E2
7T20-1 F1
7T20-2 F2
7T21 F3
7T22 E8
7T23 H4
9T10 G5
9T11 H3
9T12 H3
9T13 I5
AT35 E11
FT20 A2
FT21 B2
FT22 B2
FT23 C2
FT24 C2
FT25 D2
FT26 D2
FT27 E2
FT28 F3
FT29 F2
IT01 F12
IT30 B1
IT31 E7
IT32 F7
IT33 F6
IT34 E6
IT36 G8
IT37 E7
IT38 E6
IT40 G6
IT41 I5
IT45 F1
IT46 F2
IT47 F1
IT48 F2
IT49 F2
IT50 F3
IT51 H4
IT52 I2
IT53 I3
IT54 I4

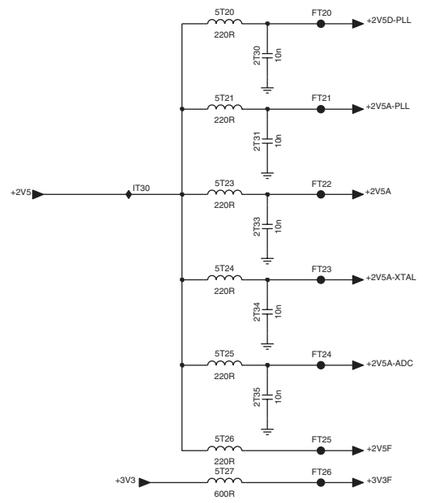

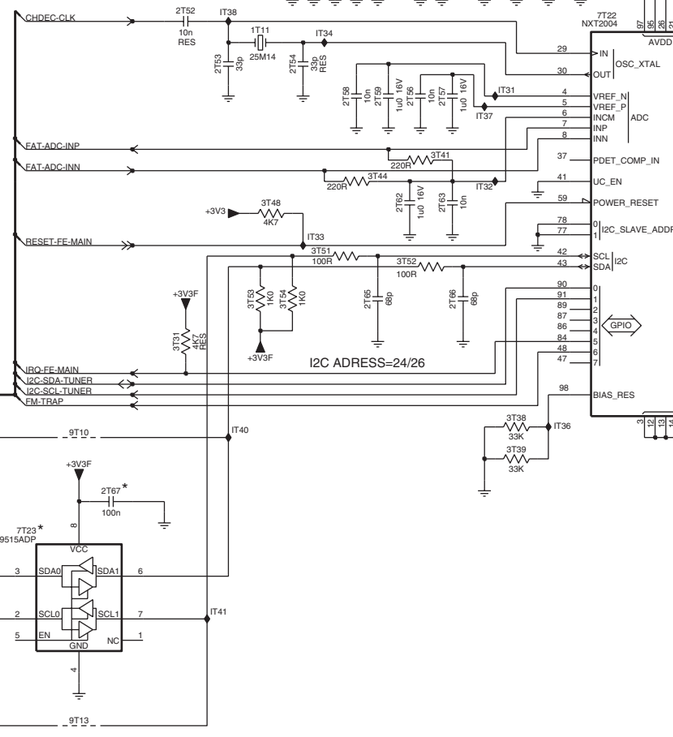

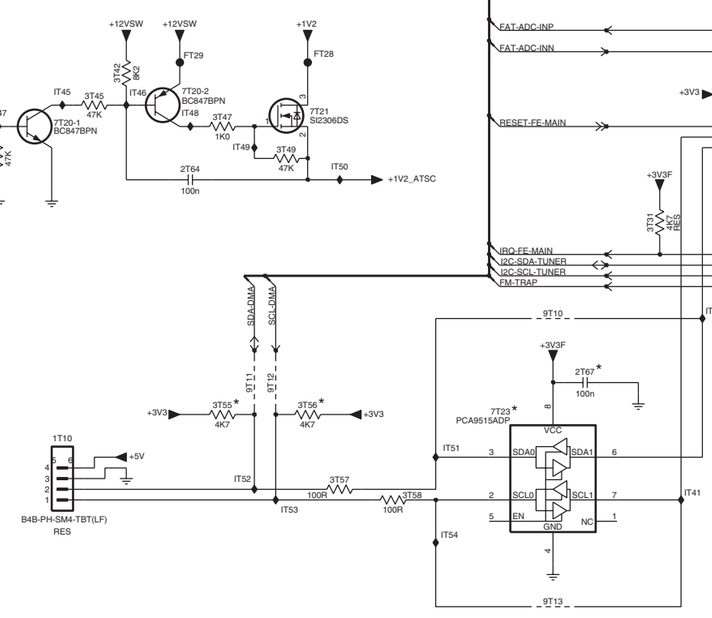

3104 313 6173.1

G_16840_038.eps
220107

SSB: Main Tuner

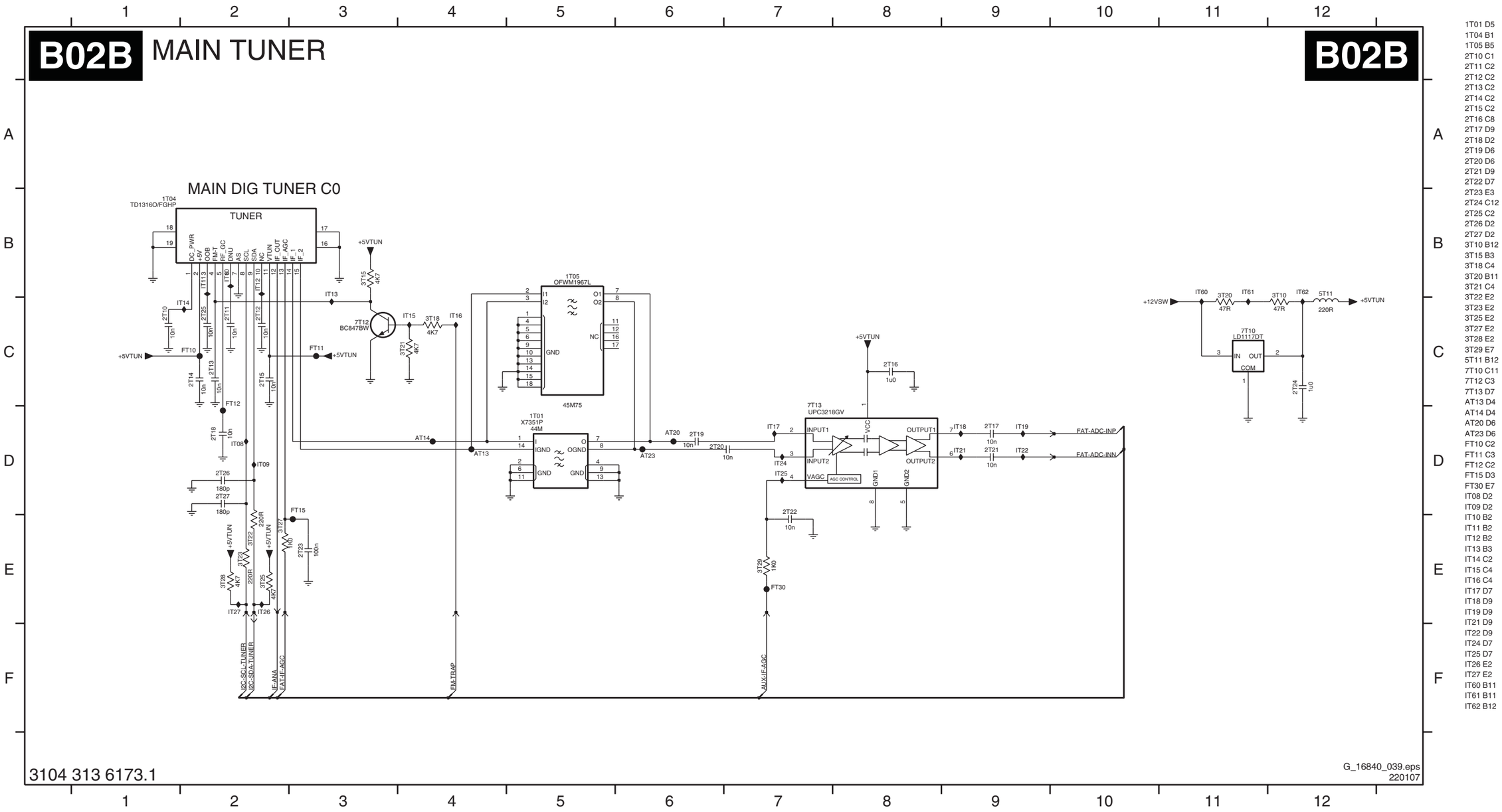

1T01 D5
1T04 B1
1T05 B5
2T10 C1
2T11 C2
2T12 C2
2T13 C2
2T14 C2
2T15 C2
2T16 C8
2T17 D9
2T18 D2
2T19 D6
2T20 D6
2T21 D9
2T22 D7
2T23 E3
2T24 C12
2T25 C2
2T26 D2
2T27 D2
3T10 B12
3T15 B3
3T18 C4
3T20 B11
3T21 C4
3T22 E2
3T23 E2
3T25 E2
3T27 E2
3T28 E2
3T29 E7
5T11 B12
7T10 C11
7T12 C3
7T13 D7
AT13 D4
AT14 D4
AT20 D6
AT23 D6
FT10 C2
FT11 C3
FT12 C2
FT15 D3
FT30 E7
IT08 D2
IT09 D2
IT10 B2
IT11 B2
IT12 B2
IT13 B3
IT14 C2
IT15 C4
IT16 C4
IT17 D7
IT18 D9
IT19 D9
IT21 D9
IT22 D9
IT24 D7
IT25 D7
IT26 E2
IT27 E2
IT60 B11
IT61 B11
IT62 B12

SSB: MPIF Main: Video Source Selection

B03A MPIF MAIN: VIDEO SOURCE SELECTION

B03A

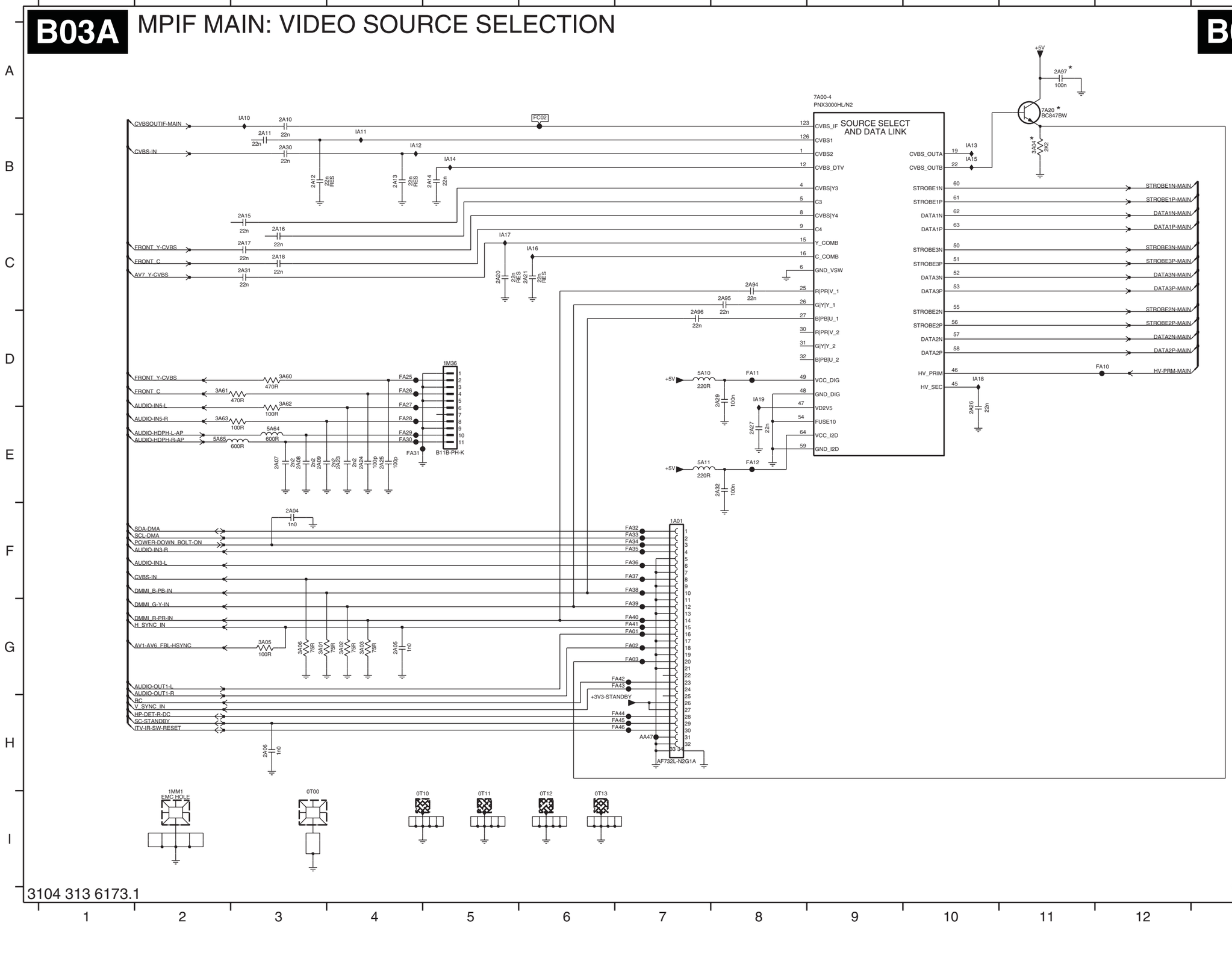

G_16840_040.eps
220107

0T00 I3
0T10 I4
0T11 I5
0T12 I6
0T13 I6
1A01 F7
1M36 D5
1MM1 I2
2A04 F3
2A05 G4
2A06 H3
2A07 E3
2A08 E3
2A09 E3
2A10 B3
2A11 B3
2A12 B3
2A13 B4
2A14 B5
2A15 C3
2A16 C3
2A17 C3
2A18 C3
2A20 C5
2A21 C6
2A23 E4
2A24 E4
2A25 E4
2A26 E10
2A27 E8
2A29 D8
2A30 B3
2A31 C3
2A32 E8
2A94 C8
2A95 C8
2A96 D7
2A97 A11
3A01 G3
3A02 G4
3A03 G4
3A04 B11
3A05 G3
3A06 G3
3A60 D3
3A61 D2
3A62 D3
3A63 E2
5A10 D7
5A11 E7
5A64 E3
5A65 E2
7A00-4 A9
7A20 A11
AA47 H7
FA01 G7
FA02 G7
FA03 G7
FA10 D12
FA11 D8
FA12 E8
FA25 D4
FA26 D4
FA27 D4
FA28 E4
FA29 E4
FA30 E4
FA31 E4
FA32 F7
FA33 F7
FA34 F7
FA35 F7
FA36 F7
FA37 F7
FA38 F7
FA39 G7
FA40 G7
FA41 G7
FA42 G7
FA43 G7
FA44 H7
FA45 H7
FA46 H7
FC02 A6
IA10 A3
IA11 B4
IA12 B4
IA13 B10
IA14 B5
IA15 B10
IA16 C6
IA17 C5
IA18 D10
IA19 D8

SSB: MPIF Main: Supply

B03B MPIF MAIN: SUPPLY

B03B

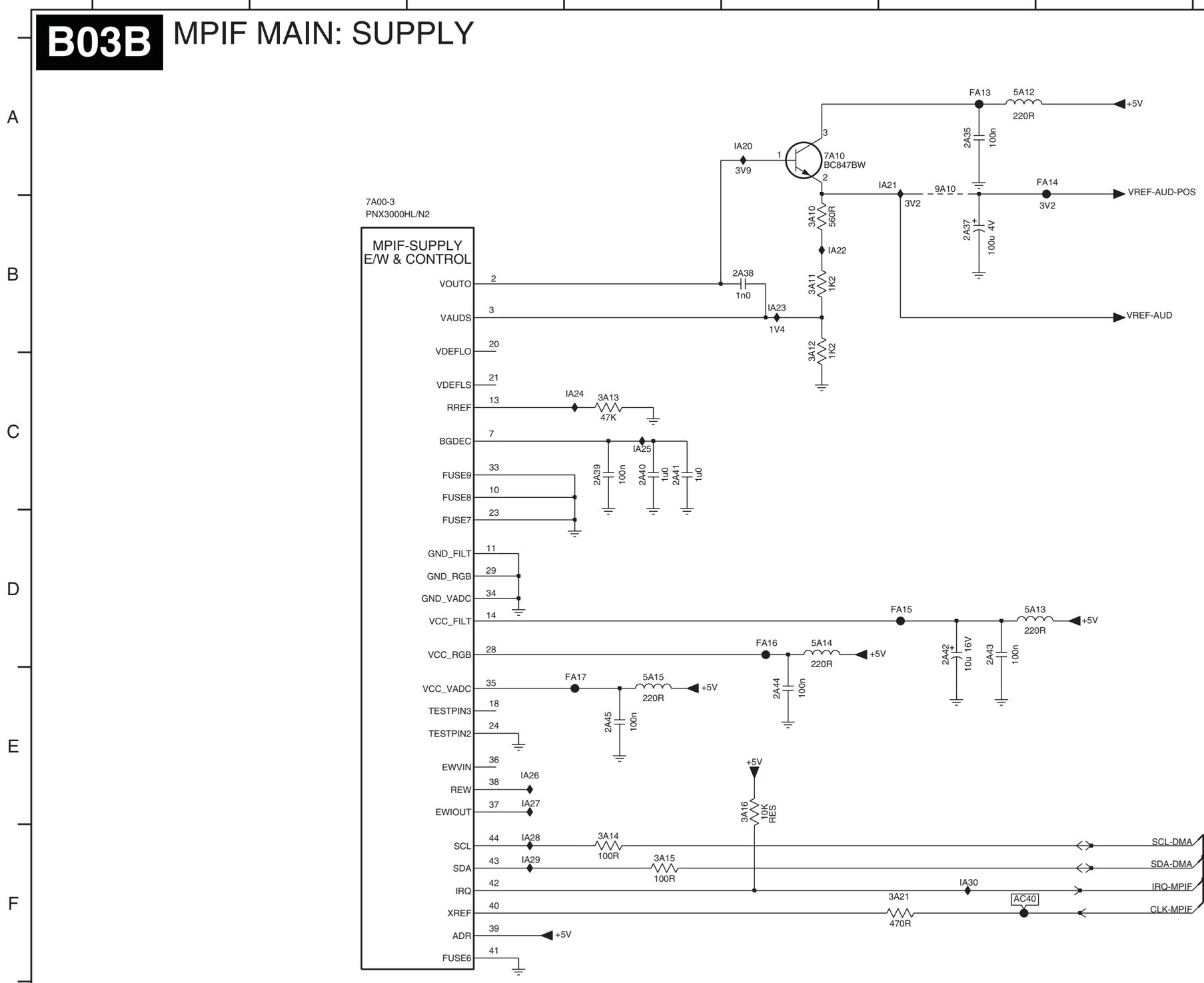

2A35 A6
2A37 B6
2A38 B5
2A39 C4
2A40 C4
2A41 C4
2A42 D6
2A43 D6
2A44 E5
2A45 E4
3A10 B5
3A11 B5
3A12 B5
3A13 C4
3A14 F4
3A15 F4
3A16 E5
3A21 F6
5A12 A6
5A13 D6
5A14 D5
5A15 E4
7A00-3 B2
7A10 A5
9A10 A6
AC40 F6
FA13 A6
FA14 A7
FA15 D6
FA16 D5
FA17 E4
IA20 A5
IA21 A6
IA22 B5
IA23 B5
IA24 C4
IA25 C4
IA26 E3
IA27 E3
IA28 F3
IA29 F3
IA30 F6

3104 313 6173.1

G_16840_041.eps
220107

SSB: MPIF Main: IF & SAW Filter

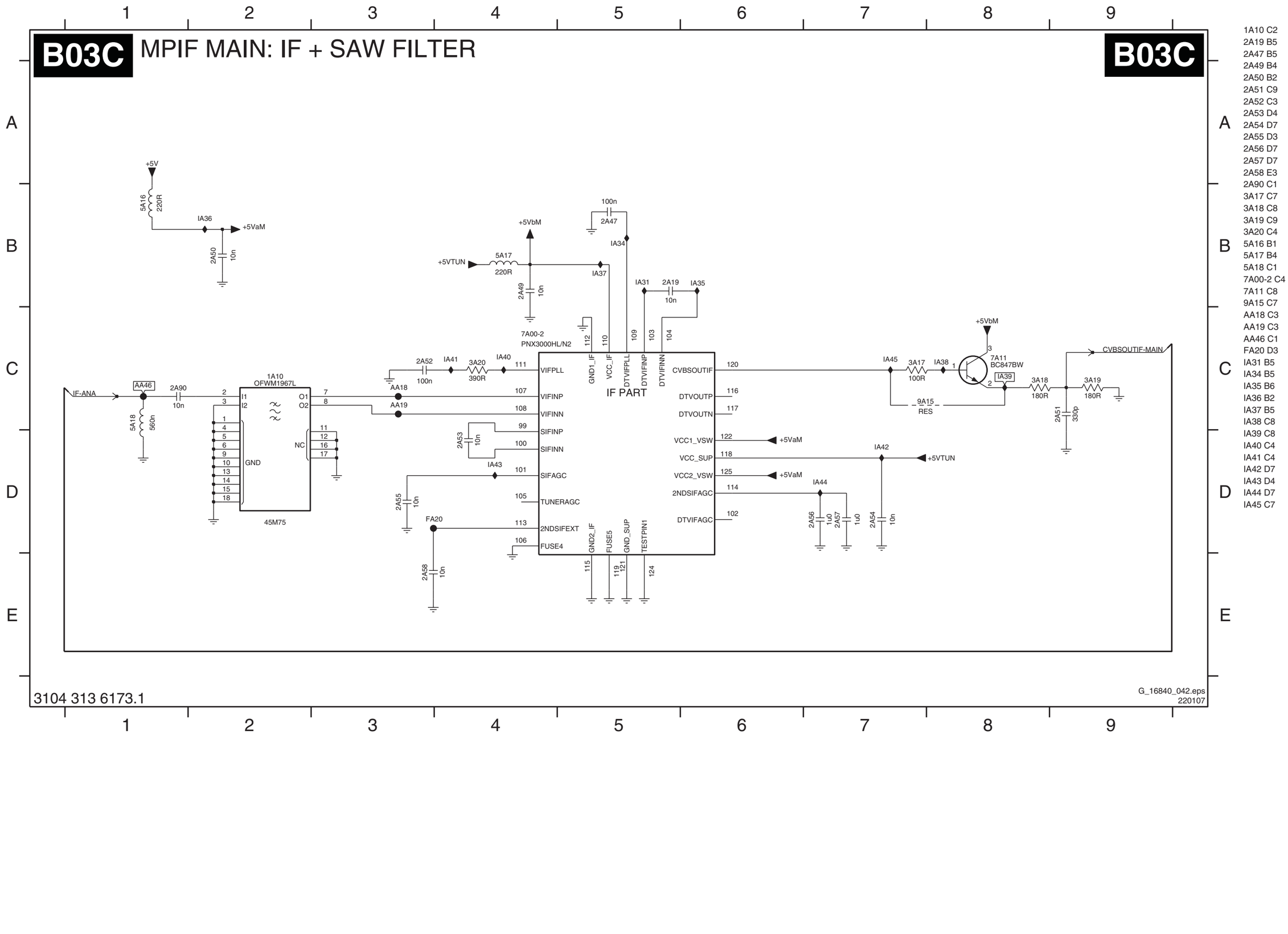

1A10 C2
2A19 B5
2A47 B5
2A49 B4
2A50 B2
2A51 C9
2A52 C3
2A53 D4
2A54 D7
2A55 D3
2A56 D7
2A57 D7
2A58 E3
2A90 C1
3A17 C7
3A18 C8
3A19 C9
3A20 C4
5A16 B1
5A17 B4
5A18 C1
7A00-2 C4
7A11 C8
9A15 C7
AA18 C3
AA19 C3
AA46 C1
FA20 D3
IA31 B5
IA34 B5
IA35 B6
IA36 B2
IA37 B5
IA38 C8
IA39 C8
IA40 C4
IA41 C4
IA42 D7
IA43 D4
IA44 D7
IA45 C7

SSB: MPIF Main: Audio Source Selection

B03D MPIF MAIN: AUDIO SOURCE SELECTION B03D

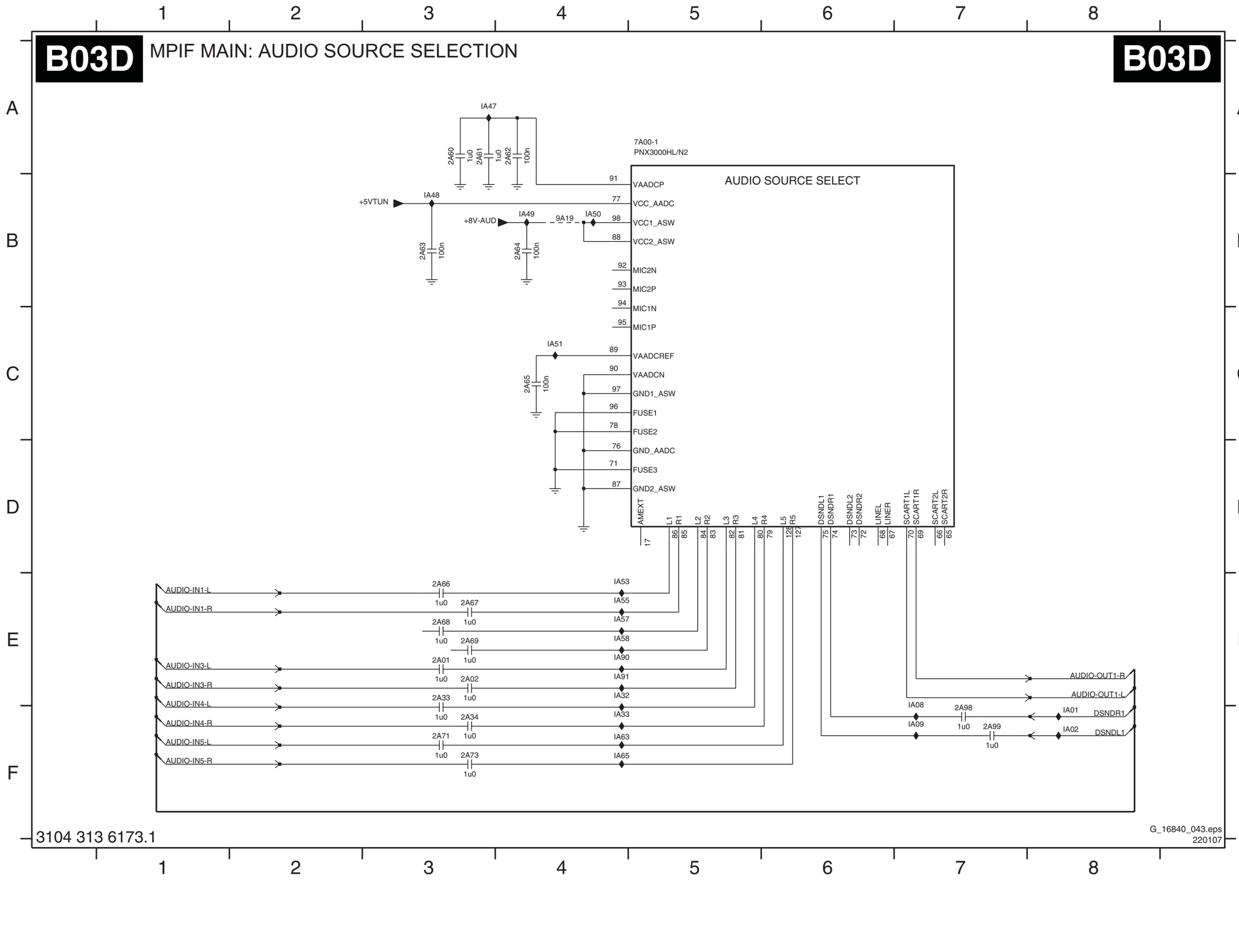

2A01 E3
2A02 E3
2A33 E3
2A34 F3
2A60 A3
2A61 A3
2A62 A4
2A63 B3
2A64 B4
2A65 C4
2A66 E3
2A67 E3
2A68 E3
2A69 E3
2A71 F3
2A73 F3
2A98 F7
2A99 F7
7A00-1 A5
9A19 B4
IA01 F8
IA02 F8
IA08 E7
IA09 F7
IA32 E4
IA33 F4
IA47 A3
IA48 B3
IA49 B4
IA50 B4
IA51 C4
IA53 E4
IA55 E4
IA57 E4
IA58 E4
IA63 F4
IA65 F4
IA90 E4
IA91 E4

3104 313 6173.1

G_16840_043.eps
220107

SSB: MPIF Main: Audio Amplifier

B03E MPIF MAIN: AUDIO AMPLIFIER

B03E

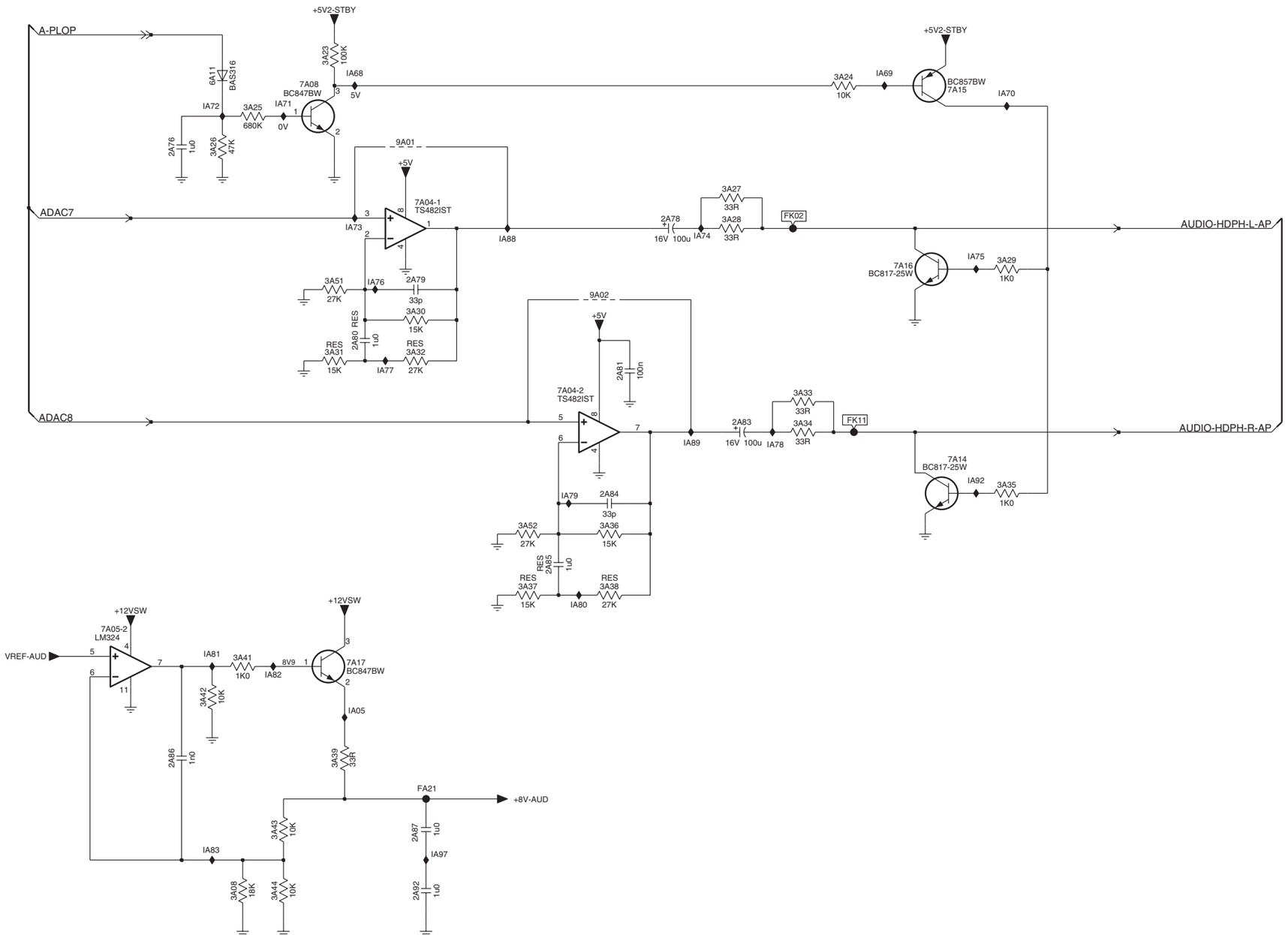

G_16840_044.eps
220107

2A76 B2
2A78 B6
2A79 C4
2A80 C4
2A81 C6
2A83 D6
2A84 D6
2A85 E5
2A86 F2
2A87 G4
2A92 G4
3A08 G3
3A23 A4
3A24 A7
3A25 B3
3A26 B3
3A27 B6
3A28 B6
3A29 C8
3A30 C4
3A31 C4
3A32 C4
3A33 D7
3A34 D7
3A35 D8
3A36 E6
3A37 E5
3A38 E6
3A39 F4
3A41 E3
3A42 F3
3A43 G3
3A44 G3
3A51 C4
3A52 E5
6A11 A3
7A04-1 B4
7A04-2 D5
7A05-2 E2
7A08 A3
7A14 D8
7A15 A8
7A16 C8
7A17 F4
9A01 B4
9A02 C5
FA21 F4
FK02 B7
FK11 D7
IA05 F4
IA68 A4
IA69 A7
IA70 A8
IA71 B3
IA72 B3
IA73 B4
IA74 B6
IA75 C8
IA76 C4
IA77 C4
IA78 D7
IA79 D5
IA80 E5
IA81 E3
IA82 F3
IA83 G3
IA88 C5
IA89 D6
IA92 D8
IA97 G4

SSB: PNX2015: Audio / Video

B04A PNX2015: AUDIO / VIDEO

B04A

0E02 F5
0E03 F5
2J01 A1
2J03 A6
2J06 B6
2J08 B6
2J10 C6
2J13 E6
2J16 E6
2J18 E6
2J20 F6
2L65 D1
2L66 D1
2LA5 B1
2LA6 B1
2LA8 C1
2LA9 D1
2LT0 E9
3J01 E4
3J07 F4
3J12 C4
3J13 C4
3JA2 E4
3L00 E9
3L01 E8
3L02 E9
3L03 E8
5J00 A6
5J01 B6
5J02 B6
5J03 C6
5J04 D6
5J05 E6
5J06 E6
5J07 F6
6J07 D9
6J08 D9
7J00-7 A3
7J01 E8
7J02-1 F9
7J02-2 E9
9J22 C4
9J24 C5
FLA8 E7
IJ00 A5
IJ01 B5
IJ02 B5
IJ03 C5
IJ04 D6
IJ05 E6
IJ06 E6
IJ07 F6
IJ09 D9
IJ11 E8
IJ25 E9
IJ26 E9
IJ27 F8
IJ53 D9
IJ54 D9
IJ55 E8

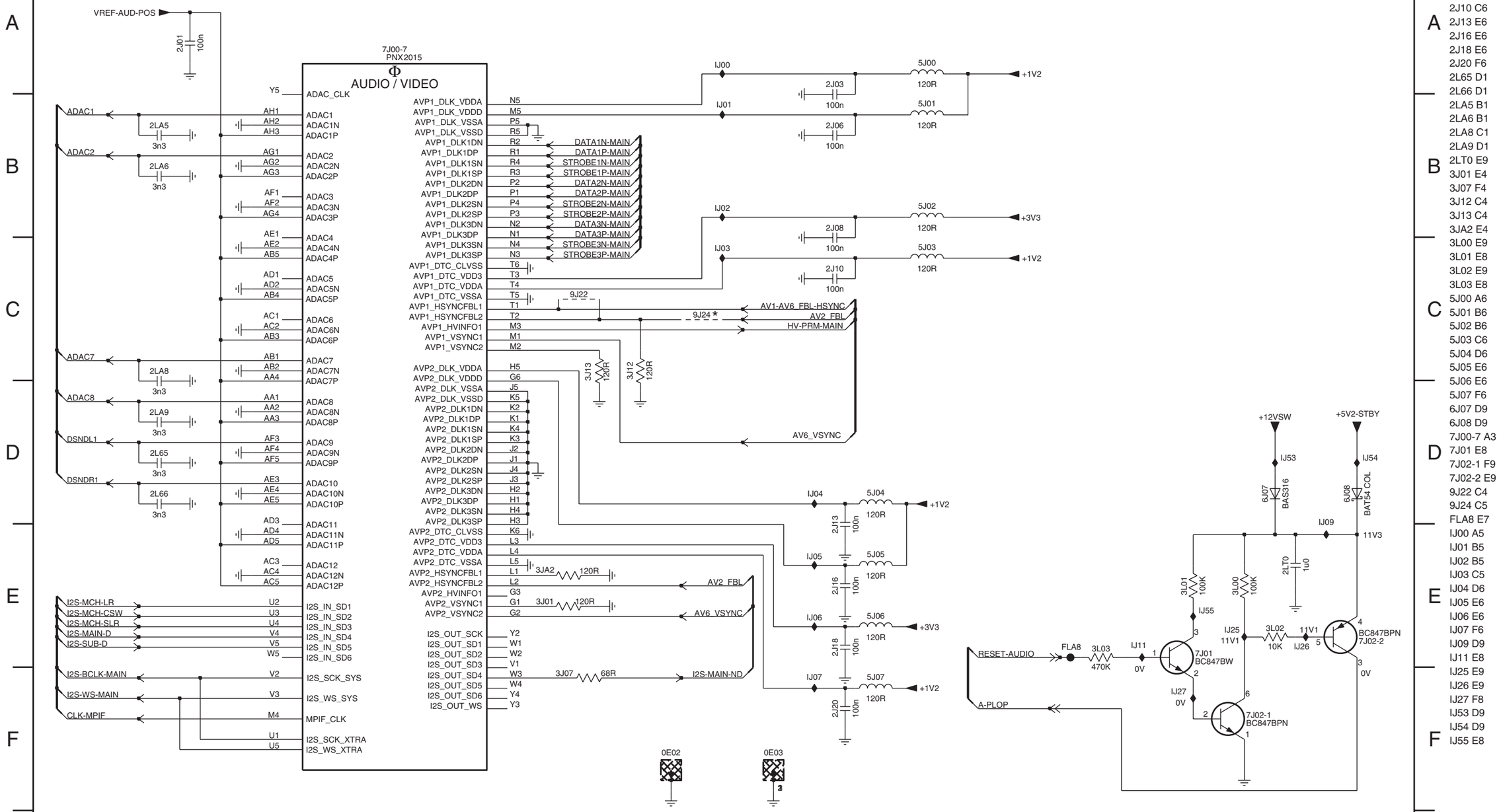

3104 313 6173.1

G_16840_045.eps 220107

SSB: PNX2015: DV I/O Interface

B04B PNX 2015: DV I/O INTERFACE

B04B

3LR0 D4
3LR1 C4
3LR9-1 D4
3LR9-2 E4
3LR9-3 D4
3LR9-4 D4
3LS0-2 D4
3LS0-3 D4
3LS0-4 E4
3LS1-1 D4
3LS1-2 D4
3LS1-3 E4
3LS1-4 E4
7J00-2 B7
7J00-4 B2
AJ10 D8

7J00-4
PNX2015
Φ
DV INPUT

DV4-CLK AK8 → DV_CLK
DV4-VALID AH8 → DV_VALID
DV4-DATA0_SOP AG8 → DV4_DATA_0
DV4-DATA1_ERR AK7 → DV4_DATA_1
DV4-DATA2_0 AJ7 → DV4_DATA_2
DV4-DATA3_1 AH7 → DV4_DATA_3
DV4-DATA4_2 AG7 → DV4_DATA_4
DV4-DATA5_3 AF7 → DV4_DATA_5
DV4-DATA6_4 AK6 → DV4_DATA_6
DV4-DATA7_5 AJ6 → DV4_DATA_7
DV4-DATA8_6 AH6 → DV4_DATA_8
DV4-DATA9_7 AG6 → DV4_DATA_9

DV5-DATA0_SOP AF6 → DV5_DATA_0
DV5-DATA1_ERR AK5 → DV5_DATA_1
DV5-DATA2_0 AH5 → DV5_DATA_2
DV5-DATA3_1 AG5 → DV5_DATA_3
DV5-DATA4_2 AK4 → DV5_DATA_4
DV5-DATA5_3 AJ4 → DV5_DATA_5
DV5-DATA6_4 AH4 → DV5_DATA_6
DV5-DATA7_5 AK3 → DV5_DATA_7
DV5-DATA8_6 AJ3 → DV5_DATA_8
DV5-DATA9_7 AK2 → DV5_DATA_9

DV-VREF AJ9 → DV_VREF
DV-FREF AK9 → DV_FREF
DV-HREF AH9 → DV_HREF

DV1_CLK AD28
DV1_VALID AD29
DV1_DATA0 AB27
DV1_DATA1 AA30
DV1_DATA2 AA29
DV1_DATA3 AA28
DV1_DATA4 AB29
DV1_DATA5 AB28
DV1_DATA6 AC30
DV1_DATA7 AC28
DV1_DATA8 AC27
DV1_DATA9 AB30

DV2_CLK AF30 → 33R 3LR1 → DV2A-CLK
DV2_VALID AF27
DV2_DATA0 AE30
DV2_DATA1 AF28
DV2_DATA2 AD27
DV2_DATA3 AD26
DV2_DATA4 AD30
DV2_DATA5 AE26
DV2_DATA6 AE27
DV2_DATA7 AE28
DV2_DATA8 AE29
DV2_DATA9 AG27

DV3_CLK AK28 → 33R 3LR0 → DV3F-CLK
DV3_VALID AK30 → 33R 3LS1-2 → DV3F-VALID
DV3_DATA0 AJ30 → 33R 3LR9-4 → DV3F-DATA0_SOP
DV3_DATA1 AH29 → 33R 3LR9-3 → DV3F-DATA1_ERR
DV3_DATA2 AG29 → 33R 3LS0-3 → DV3F-DATA2_0
DV3_DATA3 AG30 → 33R 3LR9-1 → DV3F-DATA3_1
DV3_DATA4 AH30 → 33R 3LS1-1 → DV3F-DATA4_2
DV3_DATA5 AG28 → 33R 3LS0-2 → DV3F-DATA5_3
DV3_DATA6 AH27 → 33R 3LR9-2 → DV3F-DATA6_4
DV3_DATA7 AJ28 → 33R 3LS1-3 → DV3F-DATA7_5
DV3_DATA8 AK29 → 33R 3LS1-4 → DV3F-DATA8_6
DV3_DATA9 AH28 → 33R 3LS0-4 → DV3F-DATA9_7

7J00-2
PNX2015
Φ
OUTPUT INTERFACE

MP-ROUT-0 A27 → RIN0
MP-ROUT-1 A28 → RIN1
MP-ROUT-2 A29 → RIN2
MP-ROUT-3 A30 → RIN3
MP-ROUT-4 B28 → RIN4
MP-ROUT-5 B30 → RIN5
MP-ROUT-6 C28 → RIN6
MP-ROUT-7 C29 → RIN7
MP-ROUT-8 C30 → RIN8
MP-ROUT-9 D27 → RIN9

MP-GOUT-0 D28 → GIN0
MP-GOUT-1 D29 → GIN1
MP-GOUT-2 D30 → GIN2
MP-GOUT-3 E27 → GIN3
MP-GOUT-4 E28 → GIN4
MP-GOUT-5 E30 → GIN5
MP-GOUT-6 F26 → GIN6
MP-GOUT-7 F27 → GIN7
MP-GOUT-8 F28 → GIN8
MP-GOUT-9 F29 → GIN9

MP-BOUT-0 F30 → BIN0
MP-BOUT-1 G26 → BIN1
MP-BOUT-2 G27 → BIN2
MP-BOUT-3 G28 → BIN3
MP-BOUT-4 G29 → BIN4
MP-BOUT-5 G30 → BIN5
MP-BOUT-6 H27 → BIN6
MP-BOUT-7 H28 → BIN7
MP-BOUT-8 H30 → BIN8
MP-BOUT-9 J26 → BIN9

LVDS_AN B26 → TXPNXA-
LVDS_AP C26 → TXPNXA+
LVDS_BN A25 → TXPNXB-
LVDS_BP B25 → TXPNXB+
LVDS_CN D25 → TXPNXC-
LVDS_CP E25 → TXPNXC+
LVDS_DN B24 → TXPNXD-
LVDS_DP C24 → TXPNXD+
LVDS_EN E24 → TXPNXE-
LVDS_EP F24 → TXPNXE+
LVDS_CLKN C23 → TXPNXCLK-
LVDS_CLKP D23 → TXPNXCLK+

RGB_CLK_IN J30 → AJ10 → MP-CLKOUT
RGB_UD J27 → MP-OUT-FFIELD
RGB_HSYNC J29 → MP-OUT-HS
RGB_VSYNC J28 → MP-OUT-VS
RGB_DE K26 → MP-OUT-DE

3104 313 6173.1

G_16840_046.eps
220107

SSB: PNX2015: Tunnelbus

B04C PNX 2015: TUNNELBUS B04C

7J00-1
PNX2015
TUNNELBUS

A1	TUNN_TX_BUSY	TUNS_TX_BUSY	R28			TUN-VIPER-RX-BUSY
D2	TUNN_TX_CLKN	TUNS_TX_CLKN	M30			
C2	TUNN_TX_CLKP	TUNS_TX_CLKP	M29	3L10	33R	TUN-VIPER-RX-CLKP
C4	TUNN_TX_D0	TUNS_TX_D0	K28	3L12-2	33R	TUN-VIPER-RX-DATA0
B4	TUNN_TX_D1	TUNS_TX_D1	K27	3L12-1	33R	TUN-VIPER-RX-DATA1
A4	TUNN_TX_D2	TUNS_TX_D2	L30	3L13-4	33R	TUN-VIPER-RX-DATA2
F3	TUNN_TX_D3	TUNS_TX_D3	L28	3L13-3	33R	TUN-VIPER-RX-DATA3
B3	TUNN_TX_D4	TUNS_TX_D4	K29	3L12-4	33R	TUN-VIPER-RX-DATA4
C3	TUNN_TX_D5	TUNS_TX_D5	N26	3L13-2	33R	TUN-VIPER-RX-DATA5
D3	TUNN_TX_D6	TUNS_TX_D6	L27	3L13-1	33R	TUN-VIPER-RX-DATA6
E3	TUNN_TX_D7	TUNS_TX_D7	K30	3L12-3	33R	TUN-VIPER-RX-DATA7
F2	TUNN_TX_D8	TUNS_TX_D8	M27	3L14-4	33R	TUN-VIPER-RX-DATA8
A3	TUNN_TX_D9	TUNS_TX_D9	N28	3L14-1	33R	TUN-VIPER-RX-DATA9
F1	TUNN_TX_D10	TUNS_TX_D10	N27	3L11-4	33R	TUN-VIPER-RX-DATA10
A2	TUNN_TX_D11	TUNS_TX_D11	P28	3L11-3	33R	TUN-VIPER-RX-DATA11
B1	TUNN_TX_D12	TUNS_TX_D12	P27	3L11-2	33R	TUN-VIPER-RX-DATA12
C1	TUNN_TX_D13	TUNS_TX_D13	N30	3L14-3	33R	TUN-VIPER-RX-DATA13
D1	TUNN_TX_D14	TUNS_TX_D14	N29	3L14-2	33R	TUN-VIPER-RX-DATA14
E1	TUNN_TX_D15	TUNS_TX_D15	R29	3L11-1	33R	TUN-VIPER-RX-DATA15
D9	TUNN_RX_D0	TUNS_RX_D0	R27			TUN-VIPER-TX-DATA0
C9	TUNN_RX_D1	TUNS_RX_D1	P30			TUN-VIPER-TX-DATA1
A9	TUNN_RX_D2	TUNS_RX_D2	T27			TUN-VIPER-TX-DATA2
D8	TUNN_RX_D3	TUNS_RX_D3	R30			TUN-VIPER-TX-DATA3
B9	TUNN_RX_D4	TUNS_RX_D4	T28			TUN-VIPER-TX-DATA4
D7	TUNN_RX_D5	TUNS_RX_D5	T29			TUN-VIPER-TX-DATA5
C8	TUNN_RX_D6	TUNS_RX_D6	T30			TUN-VIPER-TX-DATA6
A8	TUNN_RX_D7	TUNS_RX_D7	U27			TUN-VIPER-TX-DATA7
D6	TUNN_RX_D8	TUNS_RX_D8	V27			TUN-VIPER-TX-DATA8
C6	TUNN_RX_D9	TUNS_RX_D9	V28			TUN-VIPER-TX-DATA9
B6	TUNN_RX_D10	TUNS_RX_D10	V29			TUN-VIPER-TX-DATA10
A6	TUNN_RX_D11	TUNS_RX_D11	V30			TUN-VIPER-TX-DATA11
D5	TUNN_RX_D12	TUNS_RX_D12	W26			TUN-VIPER-TX-DATA12
C5	TUNN_RX_D13	TUNS_RX_D13	W27			TUN-VIPER-TX-DATA13
A5	TUNN_RX_D14	TUNS_RX_D14	W28			TUN-VIPER-TX-DATA14
E4	TUNN_RX_D15	TUNS_RX_D15	W29			TUN-VIPER-TX-DATA15
D4	TUNN_RX_BUSY	TUNS_RX_BUSY	W30	3L15	33R	TUN-VIPER-TX-BUSY
B7	TUNN_RX_CLKN	TUNS_RX_CLKN	U30			TUN-VIPER-TX-CLKN
C7	TUNN_RX_CLKP	TUNS_RX_CLKP	U28			TUN-VIPER-TX-CLKP
A7	TUNN_REF	TUNS_REF	M28			VREF-PNX

9LA8, 9LA9, +2V5

2L64 1n0

2L01 1n0

+2V5

IL03

2L06 1u0 *

3L38 1K0

2L07 100n

3L20 47R

IL05 1V3

VREF-PNX

3L39 1K0

2L08 100n

2L01 E5
2L06 F2
2L07 F3
2L08 F3
2L64 E2
3L10 B4
3L11-1 C4
3L11-2 C5
3L11-3 C4
3L11-4 C5
3L12-1 B4
3L12-2 B5
3L12-3 B4
3L12-4 B5
3L13-1 B5
3L13-2 B4
3L13-3 B4
3L13-4 B5
3L14-1 B4
3L14-2 C5
3L14-3 C4
3L14-4 B5
3L15 D4
3L20 F3
3L38 F3
3L39 F3
7J00-1 A3
9LA8 D2
9LA9 D2
IL03 E3
IL05 F4

3104 313 6173.1

G_16840_047.eps
220107

SSB: PNX2015: DDR Interface

2L50 A8	2L54 A9	2L58 A7	2L62 E5	3L40 A2	3L44 A2	3L48 B2	3L52 B4	3L59 C9	3L63 C9	3L67 C9	3L71 D9	3L92 B1	3L96 C4	5L50 C6	7L50 B7	ILN1 B5
2L51 A8	2L55 C6	2L59 C5	2L63 E5	3L41 A1	3L45 A1	3L49 B1	3L56 B9	3L60 C9	3L64 C9	3L68 C9	3L89 D9	3L93 B2	3L97 C4	5L51 E4	FLA9 C6	
2L52 A8	2L56 A7	2L60 C6	3L21 E7	3L42 A2	3L46 B2	3L50 B9	3L57 B9	3L61 C9	3L65 C9	3L69 C9	3L90 B4	3L94 A5	3L98 C5	5L52 E4	IK01 E7	
2L53 A9	2L57 A7	2L61 A9	3L22 E7	3L43 A1	3L47 B1	3L51 B4	3L58 C9	3L62 C9	3L66 C9	3L70 C9	3L91 B2	3L95 A4	3L99 B5	7J00-3 A3	IL04 E5	

B04D PNX 2015: DDR INTERFACE

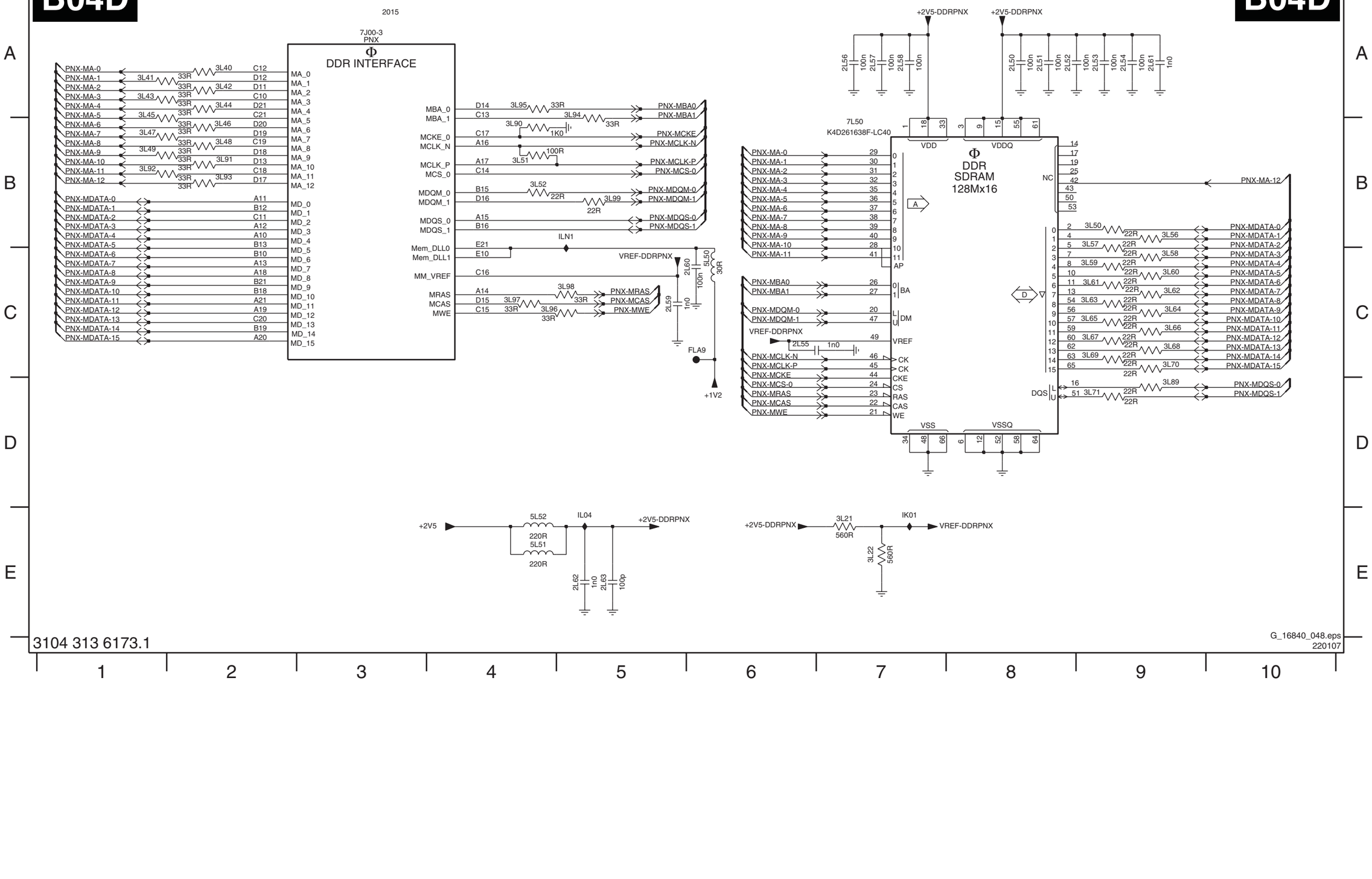

G_16840_048.eps
220107

SSB: PNX2015: Standby & Control

B04E PNX 2015: STANDBY & CONTROL

B04E

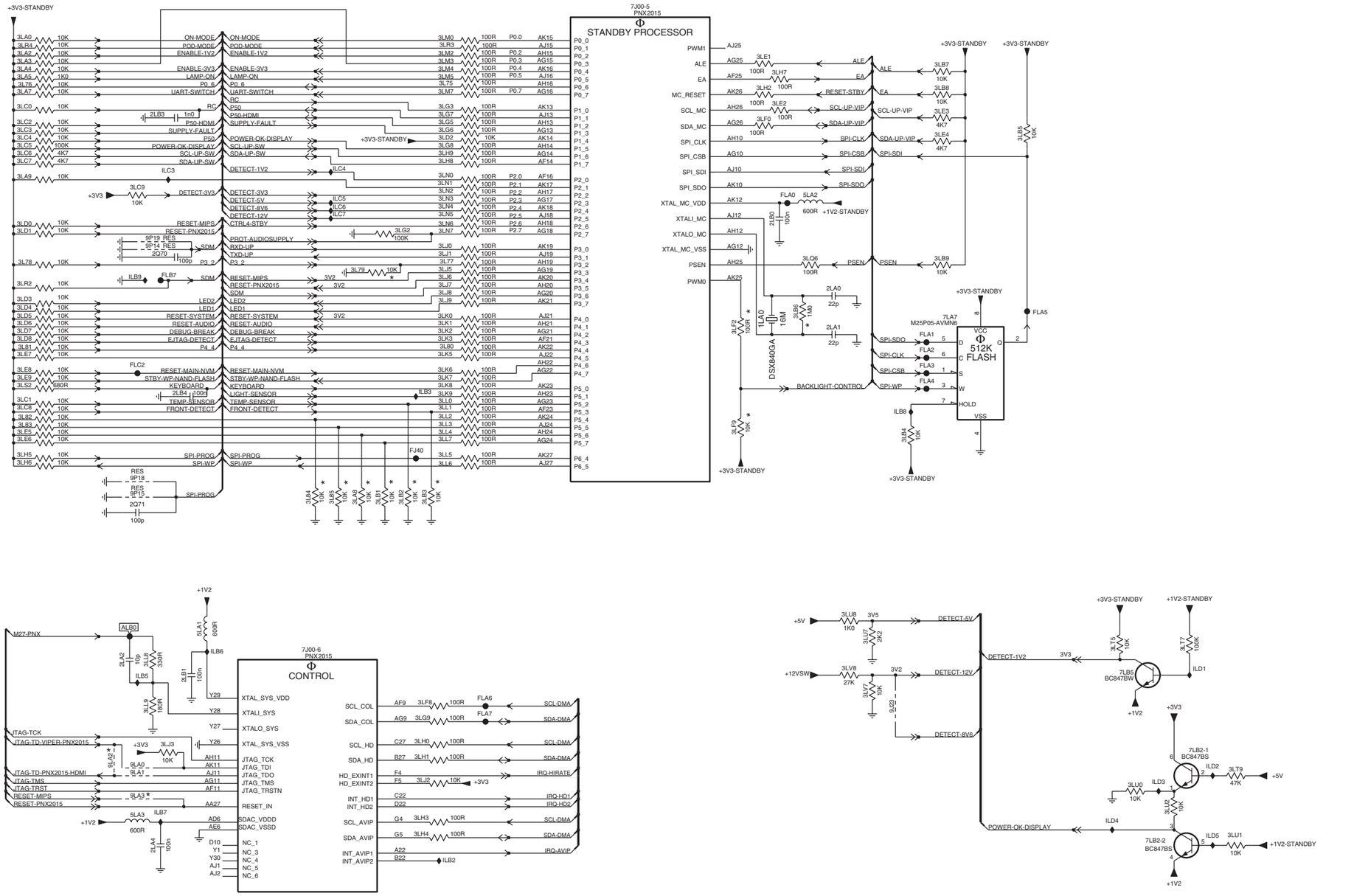

3104 313 6173.1

G_16840_049.eps
220107

1LA0 D9	3LK3 D6
2LA0 D9	3LK5 D6
2LA1 D9	3LK6 D6
2LA2 G3	3LK7 D6
2LA4 I3	3LK8 D6
2LB0 C9	3LK9 E6
2LB1 G3	3LL0 E6
2LB3 B3	3LL1 E6
2LB4 E3	3LL2 E6
2Q70 C3	3LL3 E6
2Q71 F3	3LL4 E6
3L75 B6	3LL5 E6
3L76 B2	3LL6 E6
3L77 C6	3LL7 E6
3L78 C2	3LL8 G3
3L79 C5	3LL9 G3
3L80 D6	3LM0 A6
3L81 D2	3LM2 A6
3L82 E2	3LM3 A6
3L83 E2	3LM4 B6
3L84 E5	3LM5 B6
3L85 E5	3LM7 B6
3LA0 A2	3LN0 C6
3LA2 A2	3LN1 C6
3LA3 A2	3LN2 C6
3LA4 B2	3LN3 C6
3LA5 B2	3LN4 C6
3LA7 B2	3LN5 C6
3LA8 E5	3LN6 C6
3LA9 C2	3LN7 C6
3LB1 E5	3LQ6 C9
3LB2 E5	3LR2 D2
3LB3 E6	3LR3 A6
3LB4 E10	3LR4 A2
3LB5 B11	3LS2 D2
3LB6 D9	3LT5 G12
3LB7 B10	3LT7 G13
3LB8 B10	3LT9 H13
3LB9 C10	3LU0 H12
3LC0 B2	3LU1 I13
3LC1 E2	3LU2 H12
3LC2 B2	3LU7 G10
3LC3 B2	3LU8 G9
3LC4 B2	3LV7 G10
3LC5 B2	3LV8 G9
3LC6 B2	5LA1 G3
3LC7 B2	5LA2 C9
3LC8 E2	5LA3 H3
3LC9 C3	7J00-5 A8
3LD0 C2	7J00-6 G5
3LD1 C2	7LA7 D10
3LD2 B6	7LB2-1 H13
3LD3 D2	7LB2-2 I12
3LD4 D2	7LB5 G12
3LD5 D2	9J23 G10
3LD6 D2	9LA0 H3
3LD7 D2	9LA1 H3
3LD8 D2	9LA2 H3
3LE1 A9	9LA3 H3
3LE2 B9	9P14 C3
3LE3 B10	9P15 E3
3LE4 B10	9P18 E3
3LE5 E2	9P19 C3
3LE6 E2	ALB0 G3
3LE7 D2	FJ40 E5
3LE8 D2	FLA0 C9
3LE9 D2	FLA1 D10
3LF0 B9	FLA2 D10
3LF2 D8	FLA3 D10
3LF8 G6	FLA4 D10
3LF9 E8	FLA5 D11
3LG2 C5	FLA6 G6
3LG3 B6	FLA7 H6
3LG5 B6	FLB7 C3
3LG6 B6	FLC2 D3
3LG7 B6	ILB2 I6
3LG8 B6	ILB3 E6
3LG9 H6	ILB5 G3
3LH0 H6	ILB6 G4
3LH1 H6	ILB7 H3
3LH2 B9	ILB8 E10
3LH3 H6	ILB9 C3
3LH4 I6	ILC3 B3
3LH5 E2	ILC4 B5
3LH6 E2	ILC5 C5
3LH7 B9	ILC6 C5
3LH8 B6	ILC7 C5
3LH9 B6	ILD1 G13
3LJ0 C6	ILD2 H13
3LJ1 C6	ILD3 H12
3LJ2 H6	ILD4 H12
3LJ3 H3	ILD5 I13
3LJ5 C6	
3LJ6 C6	
3LJ7 D6	
3LJ8 D6	
3LJ9 D6	
3LK0 D6	
3LK1 D6	
3LK2 D6	

SSB: PNX2015: Supply

B04F PNX 2015: SUPPLY

B04F

7J00-9 PNX2015 Φ GND

B2	VSS_1	VSS_36	R16
B5	VSS_2	VSS_37	R17
B8	VSS_3	VSS_38	R18
B11	VSS_4		
B14	VSS_5	VSS_40	T13
B17	VSS_6	VSS_41	T14
B20	VSS_7	VSS_42	T15
B29	VSS_8	VSS_43	T16
C25	VSS_9	VSS_44	T17
D24	VSS_10	VSS_45	T18
D26	VSS_11	VSS_46	J6
E2	VSS_12	VSS_47	U6
E23	VSS_13	VSS_48	U13
E26	VSS_14	VSS_49	U14
E29	VSS_15	VSS_50	U15
H29	VSS_16	VSS_51	U16
L29	VSS_17	VSS_52	U17
N13	VSS_18	VSS_53	U18
N14	VSS_19	VSS_54	U29
N15	VSS_20	VSS_55	V13
N16	VSS_21	VSS_56	V14
N17	VSS_22	VSS_57	V15
N18	VSS_23	VSS_58	V16
P13	VSS_24	VSS_59	V17
P14	VSS_25	VSS_60	V18
P15	VSS_26	VSS_61	AC29
P16	VSS_27	VSS_62	AF29
P17	VSS_28	VSS_63	AJ5
P18	VSS_29	VSS_64	AJ8
U26	VSS_30	VSS_65	AJ14
U25	VSS_31	VSS_66	AJ17
P29	VSS_32	VSS_67	AJ20
R13	VSS_33	VSS_68	AJ23
R14	VSS_34	VSS_69	AJ26
R15	VSS_35	VSS_70	AJ29

7J00-8 PNX2015 Φ SUPPLY

E9	C1V2_VDD_1	P3V3VDD_1	F25
E11	C1V2_VDD_2	P3V3VDD_2	G25
E12	C1V2_VDD_3	P3V3VDD_3	H26
E16	C1V2_VDD_4	P3V3VDD_4	M6
E17	C1V2_VDD_5	P3V3VDD_5	N6
F9	C1V2_VDD_6	P3V3VDD_6	V6
F10	C1V2_VDD_7	P3V3VDD_7	W6
F12	C1V2_VDD_8	P3V3VDD_8	AF8
F16	C1V2_VDD_9	P3V3VDD_9	AA26
F17	C1V2_VDD_10		
AA6	C1V2_VDD_11	P3V3VDD_11	AB26
J25	C1V2_VDD_12	P3V3VDD_12	AC26
K25	C1V2_VDD_13	P3V3VDD_13	AD25
AB6	C1V2_VDD_14	P3V3VDD_14	AE7
P6	C1V2_VDD_15	P3V3VDD_15	AE13
R6	C1V2_VDD_16	P3V3VDD_16	AE14
AB25	C1V2_VDD_17	P3V3VDD_17	AE24
F22	C1V2_VDD_18	P3V3VDD_18	AE25
F21	C1V2_VDD_19	P3V3VDD_19	AF26
AA5	C1V2_VDD_20		
AE10	C1V2_VDD_21	SB1V2VDD_1	AE15
AE12	C1V2_VDD_22	SB1V2VDD_2	AE16
AF10	C1V2_VDD_23	SB1V2VDD_3	AE17
AF12	C1V2_VDD_24	SB1V2VDD_4	AE18
AF13	C1V2_VDD_25	SB1V2VDD_5	AF15
E20	C1V2_VDD_26	SB1V2VDD_6	AF17
E22	C1V2_VDD_27	SB1V2VDD_7	AF18
AA25	C1V2_VDD_28	SB3V3VDD_1	AE19
		SB3V3VDD_2	AE21
E5	P2V5VDD_1	SB3V3VDD_3	AE22
E6	P2V5VDD_2	SB3V3VDD_4	AF19
E7	P2V5VDD_3	SB3V3VDD_5	AF20
E8	P2V5VDD_4		
E13	P2V5VDD_5	VDD_LVDS_1	A23
E14	P2V5VDD_6	VDD_LVDS_2	A24
E15	P2V5VDD_7	VDD_LVDS_3	A26
E18	P2V5VDD_8	VDD_LVDS	B23
E19	P2V5VDD_9		
F6	P2V5VDD_10	VDDA_SYS_PLL	AE9
F7	P2V5VDD_11	VCCA_LVDS_PLL	T25
F13	P2V5VDD_12	VDDA_1_7_MCAB	V25
F14	P2V5VDD_13	VCCA_U5PLL	P26
F15	P2V5VDD_14		
F18	P2V5VDD_15	ADC_VSSA	AF24
F19	P2V5VDD_16	ADC3V3VDDA	AF22
L26	P2V5VDD_17		
M25	P2V5VDD_18	AVDD_MCAB	V26
M26	P2V5VDD_19	AVSS_MCAB	W25
N25	P2V5VDD_20		
R26	P2V5VDD_21	SDAC_3V3	AK1
P25	P2V5VDD_22		
T26	P2V5VDD_23		
R25	P2V5VDD_24		

+1V2 → C1V2_VDD_1..28

+2V5-DDRPNX, +2V5 → P2V5VDD_1..24

+3V3 → P3V3VDD_1..19

+1V2-STANDBY → SB1V2VDD_1..7

+3V3-STANDBY → SB3V3VDD_1..5

LVDS-3V3 → VDD_LVDS_1..3

PLL-1V2 → VDDA_SYS_PLL

LVDS-3V3 → VCCA_LVDS_PLL

+3V3 → VDDA_1_7_MCAB

PLL-3V3 → VCCA_U5PLL

UP-3V3 → ADC_VSSA, ADC3V3VDDA

+1V2 → AVDD_MCAB

AVSS_MCAB → W25

SDAC_3V3 → AK1 → ILN2 → 5LN4 600R

+3V3: 2LN2 47u 4V, 2LN3 100n, 2LN4 100n, 2LN5 100n, 2LN6 100n, 2LN7 100n, 2LN8 100n

+1V2: 2LP0 100u 4V, 2LP2 100n, 2LP3 100n, 2LP4 100n

+2V5: 2LP7 100u 4V, 2LP8 100n, 2LP9 100n, 2LR0 100n

+3V3 → 5LN0 600R ILN3 → PLL-3V3; 2LR2 100n

+1V2 → 5LN1 600R ILN4 → PLL-1V2; 2LR4 100n

+3V3-STANDBY → 5LN2 600R ILN5 → UP-3V3; 2LR5 100n, 2LR6 100n

+3V3 → 5LN3 600R ILN6 → LVDS-3V3; 2LR8 100n, 2LR9 100n

ILN2 → 2LS5 100n

2L80 2u2, 2L81 2u2, 2L82 2u2, 2L83 2u2, 2L84 100n, 2L85 100n, 2L86 100n, 2L87 100n, 2L88 100p, 2L89 1n0, 2L90 1n0, 2L91 1n0, 2L92 1n0

2L80 D1
2L81 D1
2L82 D1
2L83 D1
2L84 D1
2L85 D1
2L86 D2
2L87 D2
2L88 D2
2L89 D2
2L90 D2
2L91 D3
2L92 D3
2LN2 A7
2LN3 A7
2LN4 A7
2LN5 A8
2LN6 A8
2LN7 A8
2LN8 A8
2LP0 B7
2LP2 B8
2LP3 B8
2LP4 B8
2LP7 B8
2LP8 B8
2LP9 B8
2LR0 B8
2LR2 C8
2LR4 C8
2LR5 D8
2LR6 D8
2LR8 E8
2LR9 E8
2LS5 E6
5LN0 C7
5LN1 C7
5LN2 D7
5LN3 D7
5LN4 E6
7J00-8 A5
7J00-9 A2
ILN2 E6
ILN3 C8
ILN4 C8
ILN5 D8
ILN6 D8

3104 313 6173.1

G_16840_050.eps
220107

SSB: VIPER/PNX2015: Display Interface

B04G VIPER/PNX 2015: DISPLAY INTERFACE **B04G**

ANALOG OUTPUT

AV-ROUT, AV-GOUT, AV-BOUT, LAMP-ON, LAMP-ON-OUT, MP-OUT-HS, MP-OUT-VS, GLINK-TXD, GLINK-RXD, BACKLIGHT-CONTROL

BACKLIGHT CONTROL

CTRL1-VIPER, BACKLIGHT-CNTRL-OUT

I2C AMBILIGHT *

TO AL AMBI LIGHT (1M49, B4B-PH-K)

BACKLIGHT-CNTRL-OUT, DV-OUT-VS, SDA-I2C4, SCL-I2C4

SCL-MOP, SDA-MOP

VDISP-SWITCH

CTRL1-VIPER, CTRL4-VIPER, CTRL4-STBY, ON-MODE

DISPLAY CONTROL

FHP	SDI
IRQ	RESET
PDWIN	
CPU-GO	
PDP-GO	

CTRL-DISP1, CTRL-DISP2, CTRL-DISP3, CTRL-DISP4

LVDS CONNECTOR

TXPNXA-, TXPNXA+, TXPNXB-, TXPNXB+, TXPNXC-, TXPNXC+, TXPNXCLK-, TXPNXCLK+, TXPNXD-, TXPNXD+, TXPNXE-, TXPNXE+

VDISP, CTRL-DISP1..4, SCL-I2C4, SDA-I2C4

1G50 FI-WE31P-HFE-E1500, 1P06 0-1453230-3, 1P16 B2B-PH-K

3104 313 6173.1

G_16840_051.eps
220107

1D42 C8	5J60 I9
1G50 F12	6J01 F2
1J10 E9	6J06 E5
1J11 E9	6J10-1 E10
1J12 E10	6J10-2 E11
1J13 E10	6J33-1 A10
1J33 B10	6J33-2 C10
1J35 B10	7J04 D2
1M49 B8	7J05-1 B1
1P06 F13	7J05-2 B2
1P16 I13	7J06 C3
2J21 A7	7J07 F3
2J22 B7	7J08 E2
2J23 B7	7J09 I3
2J24 C7	7J10 A4
2J25 C7	7J33-1 A11
2J26 D7	7J33-2 B11
2J27 D7	9J21 C2
2J30 I12	9J26 B9
2J31 I11	9J30 E1
2J37 H4	9J31 E1
2J38 H5	9J33 B11
2J40 F9	9J34 C1
2J41 F9	9J35 C11
2J42 F9	9J40 B4
2J43 G9	FJ01 A7
2J44 G9	FJ02 B7
2J45 G9	FJ03 B7
2J46 H9	FJ04 C7
2J47 H9	FJ05 C7
2J48 H9	FJ06 C7
2J49 I9	FJ07 D7
2J50 A11	FJ09 H5
2J51 B11	FJ10 H5
2J55 C2	FJ12 G5
2J57 G4	FJ13 E5
2J61 F5	FJ22 G5
2J64 H5	FJ23 G11
2J69 H5	FJ24 G11
2J71 E5	FJ25 G11
2J72 I9	FJ26 G11
2J73 I9	FJ27 H11
2J76 F2	FJ28 H11
2J77 B4	FJ29 H11
3J08 C10	FJ30 H11
3J09 C10	FJ31 H11
3J10 D10	FJ32 H11
3J11 D10	FJ36 H11
3J14 D10	FJ37 H11
3J15 B2	FJ47 H12
3J16 B2	FJ48 I12
3J17 B3	IJ10 D11
3J18 B4	IJ14 E2
3J19 C3	IJ15 F2
3J20 C4	IJ16 F3
3J21 C2	IJ18 H2
3J22 C1	IJ20 H2
3J23 H2	IJ23 I2
3J25 F3	IJ30 A4
3J26 B9	IJ31 B4
3J28 F4	IJ32 B4
3J30 H11	IJ33 A11
3J31 H11	IJ34 B11
3J32 B11	IJ35 B10
3J33 A11	IJ36 B11
3J35 B10	IJ37 C11
3J36 B10	IJ38 C10
3J37 B10	IJ68 F4
3J38 B11	IJ69 F4
3J39 B11	IJ70 F2
3J40 A4	IJ71 I2
3J41 A4	IJ72 C1
3J42 G4	IJ73 B3
3J43 G4	IJ74 B3
3J44 G5	IJ75 B2
3J45 C10	IJ76 B2
3J51 I2	IJ80 E4
3J52 I4	IJ81 I3
3J55 I2	IJ82 B4
3J56 I3	
3J60 C7	
3J61 C7	
3J62 C7	
3J63 D7	
3J86 E4	
3J88 G5	
3J91 H2	
3J92 F2	
3J94 F4	
3J99 F2	
5J10 D4	
5J11 E4	
5J12 E4	
5J20 A7	
5J21 B7	
5J22 B7	
5J50 F9	
5J52 G9	
5J54 G9	
5J56 H9	
5J58 H9	

SSB: VIPER: Control

0H00 B10	1H00 A2	2H06 G10	3H04 A13	3H11 D1	3H24 F7	3H54 E4	3H69 C4	3H74 A8	3H80-3 D8	3H82 A2	3H89 E10	3H98 B4	3Q11 A4	3Q16 H10	3Q21 G11	3Q29 F13	6H00 H7	6H10 G14	9H03 B4	9H08 C2	AH11 A2	FQ03 E4	FQ21 C1	FQ53 F4	IQ15 F10	IQ24 G7
0H02 B11	1H20 B10	2H07 G10	3H05 A13	3H16 C3	3H25 F7	3H55 E4	3H70 E8	3H75 A2	3H80-4 C8	3H84 E8	3H90 B1	3H99 B4	3Q12 B4	3Q17 H8	3Q22 F13	3Q48 A4	6H01 E1	6H11 H14	9H04 B1	9H13 C2	FH12 H7	FQ04 H14	FQ22 C1	IH09 D1	IQ16 F10	IQ25 G7
0H05 B10	1M00 A11	2H08 A2	3H06 A10	3H17 C3	3H31 E1	3H56 E4	3H71 C1	3H79 A8	3H81-1 D8	3H85 E1	3H94 H7	3Q03 B2	3Q13 B4	3Q18 H8	3Q23 H10	3Q52 D4	6H03 F1	6H12 H14	9H05 F4	9H15 F3	FQ00 G14	FQ10 F1	FQ23 C1	IH16 F7	IQ17 F13	IQ27 E7
0H09 C10	1M60 G15	2H09 A2	3H08 C3	3H22 B13	3H40 E1	3H57 D4	3H72 D7	3H80-1 D8	3H81-2 C8	3H86 E8	3H95 H7	3Q04 B2	3Q14 B4	3Q19 F13	3Q24 E10	5H02 G11	6H07-1 G13	7V00-5 A5	9H06 E3	9H16 B4	FQ01 G14	FQ16 F11	FQ50 C4	IQ03 G10	IQ22 F7	IQ28 F7
0H10 C10	1MM3 C11	2Q69 G14	3H10 D1	3H23 B13	3H41 F1	3H58 A8	3H73 A8	3H80-2 C8	3H81-3 D8	3H88 E8	3H97 G1	3Q10 A4	3Q15 B4	3Q20 G11	3Q27 B1	5H03 F13	6H07-2 G12	9H02 F3	9H07 C2	AH10 A9	FQ02 H14	FQ19 C1	FQ52 F4	IQ04 G10	IQ23 G7	IQ30 E1

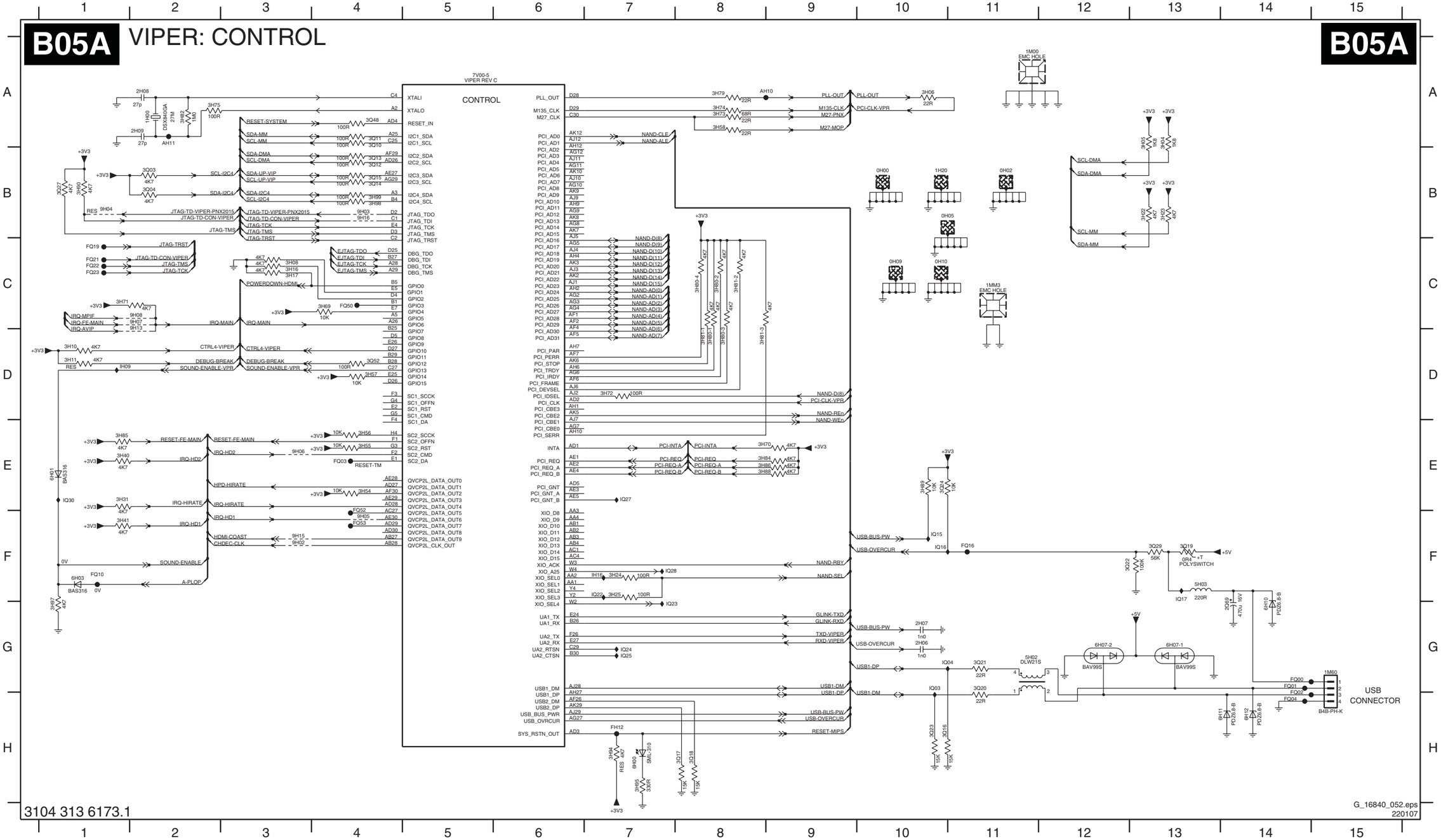

SSB: VIPER: Main Memory

B05B VIPER: MAIN MEMORY

B05B

DDR INTERFACE

7V00-2
VIPER REV C

SD RAM1

SD RAM2

7V01
MT46V32M16P-5B

7V02
MT46V32M16P-5B

DDR
SDRAM
8Mx16

+2V5-VPR

VREF-VPRDDR

RES

VREFD-VPRDDR

VREF-VPRDDR

+2V5-VPR

3104 313 6173.1

G_16840_053.eps
220107

2H00 H8
2H02 H8
2H03 H8
2H10 G8
2H11 G8
2H12 G8
2Q01 B8
2Q03 B9
2Q21 B13
2Q23 B14
2V00 D6
2V01 D14
2V02 C2
2V16 G10
2V17 G10
2V18 G11
2V19 G11
2V20 G11
2V21 G11
2V22 G12
2V23 G12
2V24 G12
2V25 G12
2V26 G12
2V27 G13
2V28 G13
2V29 G13
2V30 G13
2V31 G13
2V35 G14
2V36 B9
2V37 B9
2V38 B9
2V39 B9
2V40 B10
2V41 B11
2V42 B11
2V43 B11
2V44 B11
2V45 B12
3H50 G8
3H51 H8
3H52 F8
3H53 G8
3V00 C9
3V01 C11
3V02 C9
3V03 C11
3V04 C9
3V05 C11
3V06 C9
3V07 C11
3V08 C9
3V09 C11
3V10 C9
3V11 C11
3V12 C9
3V13 C11
3V14 C9
3V15 C11
3V16 C9
3V17 C11
3V18 C9
3V19 C11
3V20 D9
3V21 D11
3V22 D9
3V23 D11
3V24 D7
3V25 D14
3V32 D9
3V33 D11
3V34 D9
3V35 D11
3V36 D9
3V37 D11
3V38 D9
3V39 D11
3V40 D9
3V41 D11
3V42 D9
3V43 D11
3V44 E2
3V78 E2
7V00-2 B4
7V01 B7
7V02 B12
IH20 D2
IQ13 F9
IQ14 G9

SSB: VIPER: A/V & Tunnelbus

B05C VIPER: A/V + TUNNELBUS

B05C

7V00-1
VIPER REV C

AUDIO/VIDEO

DV1F-DATA0 … DV1F-DATA9_SOP, DV1F-VALID, DV1F-CLK → DV1_DATA0 … DV1_DATA9, DV1_VALID, DV1_CLK
DV2A-VALID, DV2A-CLK → DV2_DATA0 … DV2_DATA9, DV2_VALID, DV2_CLK, DV2_ERR, DV2_SOP
DV3F-DATA2_0 … DV3F-DATA0_SOP, DV3F-VALID, DV3F-CLK → DV3_DATA0 … DV3_DATA9, DV3_VALID, DV3_CLK, DV3_ERR, DV3_SOP
IH10, IH11, IH15 → DV_FREF, DV_VREF, DV_HREF
IH01, IH03, I2S-MAIN-ND, IH00, SPDIF-HDMI → I2S_IN1_SD, I2S_IN1_WS, I2S_IN1_SCK, I2S_IN1_OSCLK, I2S_IN2_SD, I2S_IN2_WS, I2S_IN2_SCK, I2S_IN2_OSCLK, SPDIF_IN2, SPDIF_IN1

QVCP5L_DATA_OUT0 … QVCP5L_DATA_OUT29, QVCP5L_CLK_OUT, QVCP5L_VSYNC, QVCP5L_HSYNC, QVCP5L_AUX1, QVCP5L_AUX2 → DV-BOUT-0 … DV-BOUT-9, DV-CLKIN, DV-OUT-VS, DV-OUT-HS, DV-OUT-FFIELD, DV-OUT-DE
DAC_IRSET, DAC_RDUMPY, DAC_RDUMPC, DAC_CVBS, DAC_CHROMA
TS_DATA0 … TS_DATA7, TS_VALID, TS_SOP, TS_CLK → CHDEC-CLK
I2S_OUT1_SD0 … I2S_OUT1_SD3, I2S_OUT1_WS, I2S_OUT1_SCK, I2S_OUT1_OSCLK → I2S-SUB-D, BACKLIGHT-CONTROL, CTRL1-VIPER
I2S_OUT2_SD0 … I2S_OUT2_SD3, I2S_OUT2_WS, I2S_OUT2_SCK, I2S_OUT2_OSCLK → I2S-MCH-LR, I2S-MCH-CSW, I2S-MCH-SLR, I2S-MAIN-D, I2S-WS-MAIN, I2S-BCLK-MAIN
SPDIF_OUT → SPDIF-OUT1

7V00-4
VIPER REV C

TUNNELBUS

TUN-VIPER-TX-DATA0 … TUN-VIPER-TX-DATA15, TUN-VIPER-TX-CLKP, TUN-VIPER-TX-CLKN, TUN-VIPER-TX-BUSY → TUN_TX_DATA0 … TUN_TX_DATA15, TUN_TX_CLOCKP, TUN_TX_CLOCKN, TUN_TX_BUSY
VREF-PNX → TUN_AVREF (2H01 1n0)
TUN_RX_DATA0 … TUN_RX_DATA15, TUN_RX_CLOCKP, TUN_RX_BUSY → TUN-VIPER-RX-DATA0 … TUN-VIPER-RX-DATA15, TUN-VIPER-RX-CLKP, TUN-VIPER-RX-BUSY

2H01 I6
3H02 C9
3H07 E8
3H18 C3
3H19 C9
3H20 D9
3H21 D9
3H28 A3
3H32 B3
3Q02-1 C9
3Q02-2 C9
3Q02-3 C9
3Q02-4 C8
3Q05-1 C9
3Q05-2 C8
3Q05-3 C9
3Q05-4 C9
3Q07-1 B8
3Q07-2 B9
3Q07-3 B9
3Q07-4 B8
3Q08-1 B9
3Q08-2 B9
3Q08-3 B8
3Q08-4 B9
3Q09 E8
3Q25-1 B8
3Q25-2 B9
3Q25-3 C8
3Q25-4 C9
3Q26-3 A9
3Q26-4 A8
3Q28-1 A9
3Q28-2 A8
3Q28-3 A9
3Q28-4 A9
3Q34-1 A9
3Q34-2 A9
3Q34-3 A8
3Q34-4 A9
3Q35-1 H6
3Q35-2 H5
3Q35-3 H6
3Q35-4 H6
3Q36-1 H5
3Q36-2 H6
3Q36-3 H6
3Q36-4 H5
3Q37-1 H5
3Q37-2 H6
3Q37-3 H5
3Q37-4 H6
3Q38-1 I5
3Q38-2 I6
3Q38-3 I6
3Q38-4 H6
3Q39 I6
3Q40 I6
3Q41 I9
3Q44-1 B9
3Q44-2 B8
3Q44-3 B9
3Q44-4 B9
7V00-1 A6
7V00-4 G7
IH00 E4
IH01 D4
IH03 D4
IH04 E8
IH05 F8
IH06 D9
IH07 C9
IH08 C9
IH10 D4
IH11 D4
IH15 D4

G_16840_054.eps
220107

SSB: VIPER: Supply

2Q00 D10 2Q05 D12 2Q08 D12 2Q11 D13 2Q14 D14 2Q17 D15 2Q20 E10 2Q26 E12 2Q30 E12 2Q34 E13 2Q38 E14 2Q42 D11 2Q45 D12 2Q48 D12 2Q51 D13 2Q54 D14 2Q57 D15 2Q60 F10 2Q63 C8 2Q66 C10 2Q77 C9 2Q80 D11 2Q83 E11 2Q86 F14 2Q89 F15 5Q01 B8 5Q04 B10 7V00-3 C1 IQ09 C8
2Q02 D11 2Q06 D12 2Q09 D13 2Q12 D13 2Q15 D14 2Q18 D15 2Q22 E11 2Q27 E12 2Q32 E13 2Q35 E14 2Q39 E14 2Q43 D11 2Q46 D12 2Q49 D13 2Q52 D13 2Q55 D14 2Q58 D15 2Q61 F11 2Q64 C8 2Q67 C9 2Q78 C9 2Q81 D10 2Q84 F13 2Q87 F14 2Q90 F15 5Q02 B8 5Q07 F11 IQ07 C9 IQ10 B9
2Q04 D11 2Q07 D12 2Q10 D13 2Q13 D14 2Q16 D14 2Q19 D15 2Q24 E11 2Q28 E12 2Q33 E13 2Q37 E14 2Q40 D10 2Q44 D11 2Q47 D12 2Q50 D13 2Q53 D14 2Q56 D14 2Q59 D15 2Q62 F11 2Q65 C9 2Q76 C8 2Q79 D10 2Q82 E10 2Q85 F14 2Q88 F14 2Q91 F13 5Q03 B9 5Q08 F11 IQ08 C10 IQ11 F11

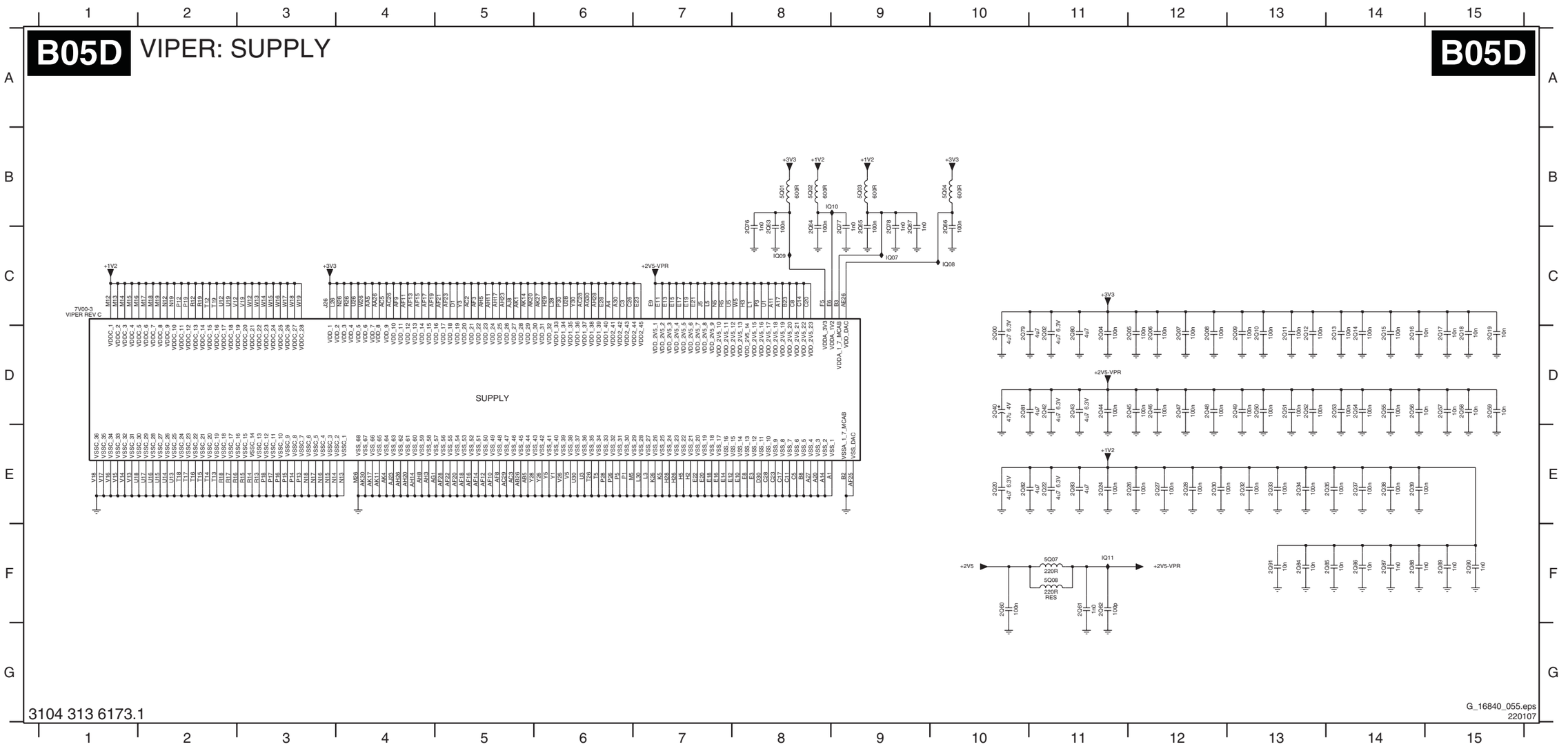

SSB: VIPER: EEPROM

B05E VIPER: EEPROM

B05E

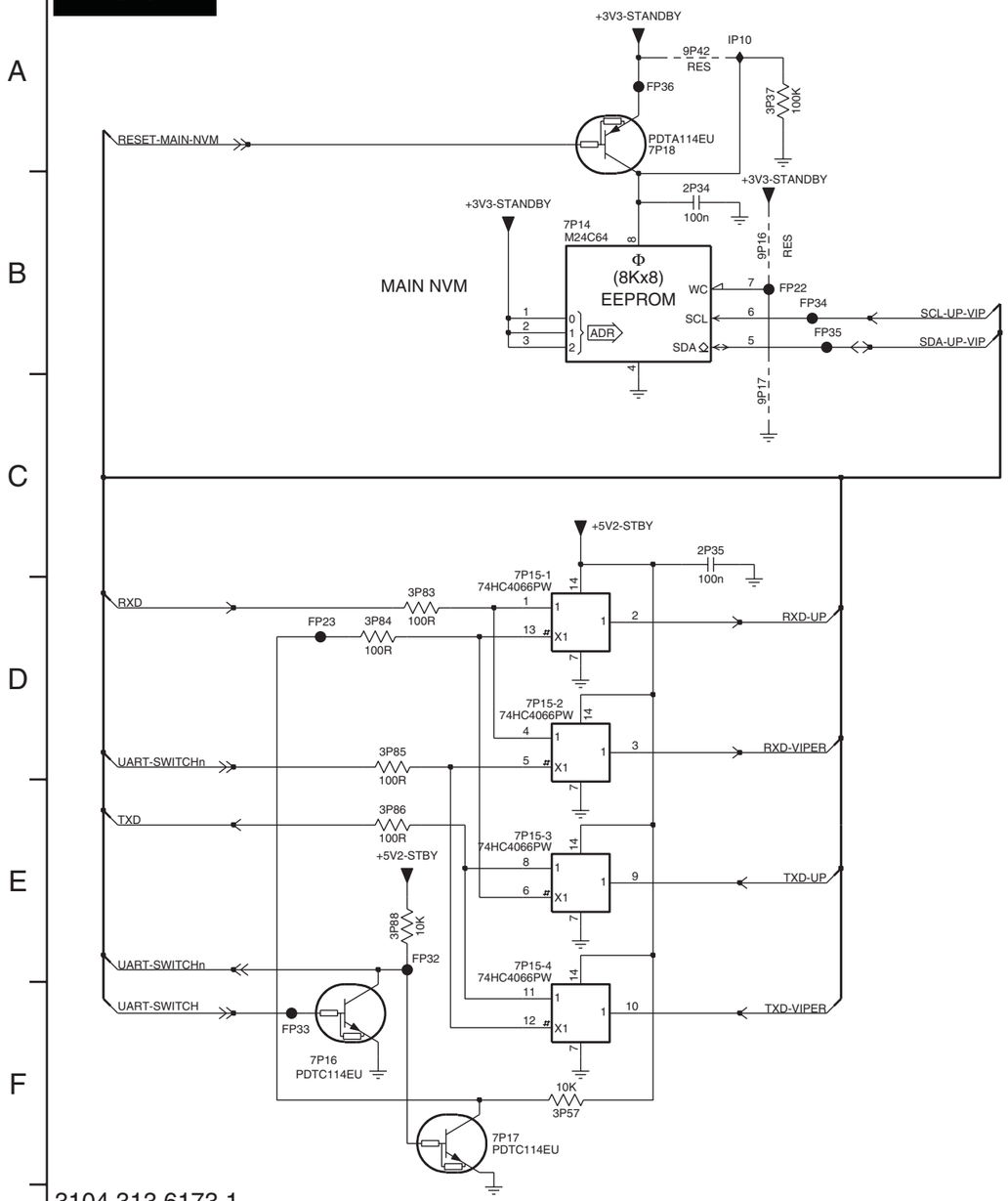

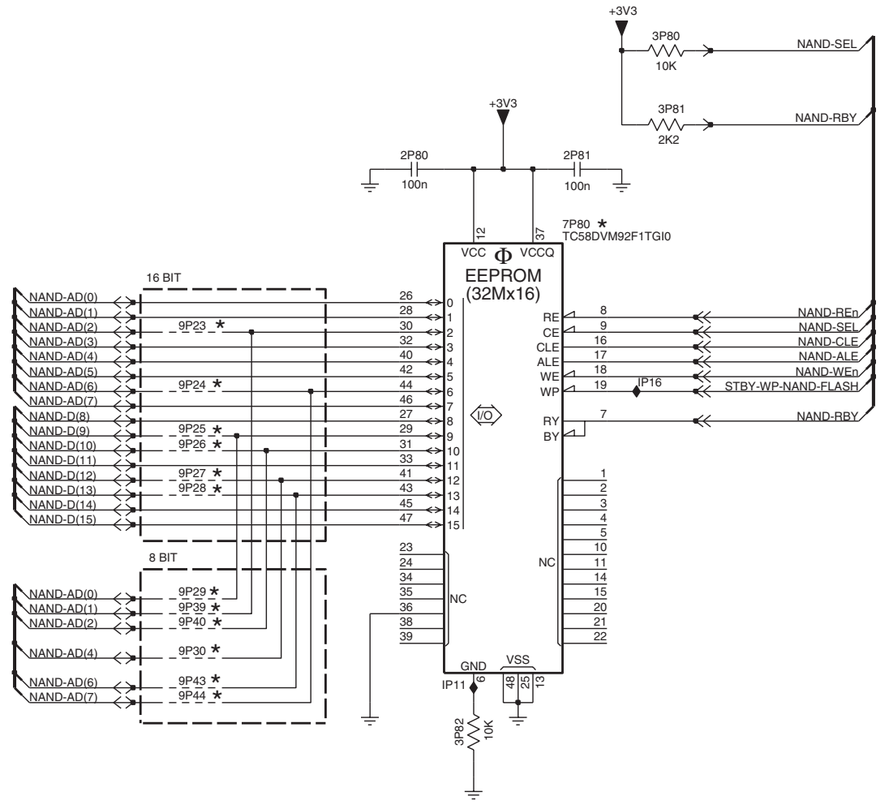

3104 313 6173.1

G_16840_056.eps
220107

2P34 B4
2P35 C4
2P80 C8
2P81 C8
3P37 A4
3P57 F3
3P80 B9
3P81 C9
3P82 F8
3P83 D2
3P84 D2
3P85 D2
3P86 E2
3P88 E2
7P14 B3
7P15-1 D3
7P15-2 D3
7P15-3 E3
7P15-4 E3
7P16 F2
7P17 F3
7P18 A3
7P80 C8
9P16 B4
9P17 C4
9P23 D7
9P24 D7
9P25 D7
9P26 D7
9P27 D7
9P28 D7
9P29 E7
9P30 E7
9P39 E7
9P40 E7
9P42 A4
9P43 E7
9P44 E7
FP22 B4
FP23 D2
FP32 E2
FP33 F2
FP34 B4
FP35 B4
FP36 A3
IP10 A4
IP11 E8
IP16 D9

SSB: VIPER: Miscellaneous

B05F MISCELLANEOUS

B05F

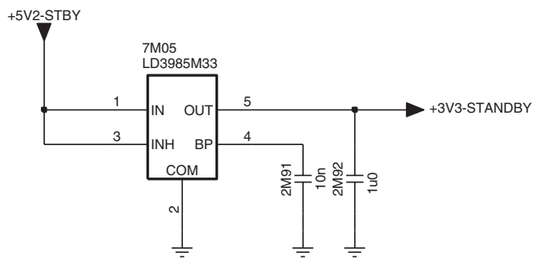

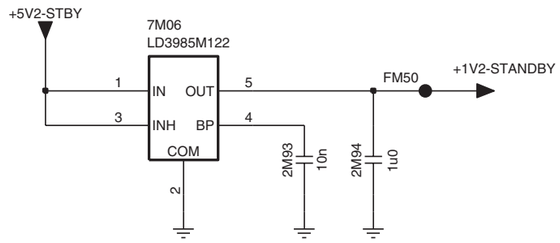

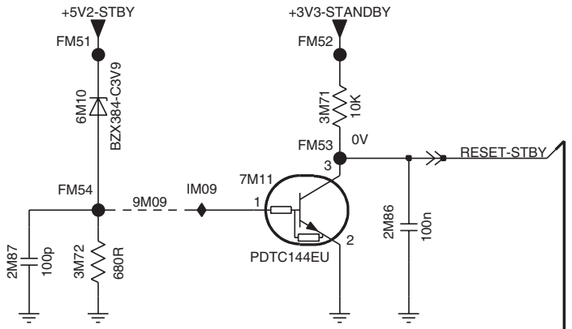

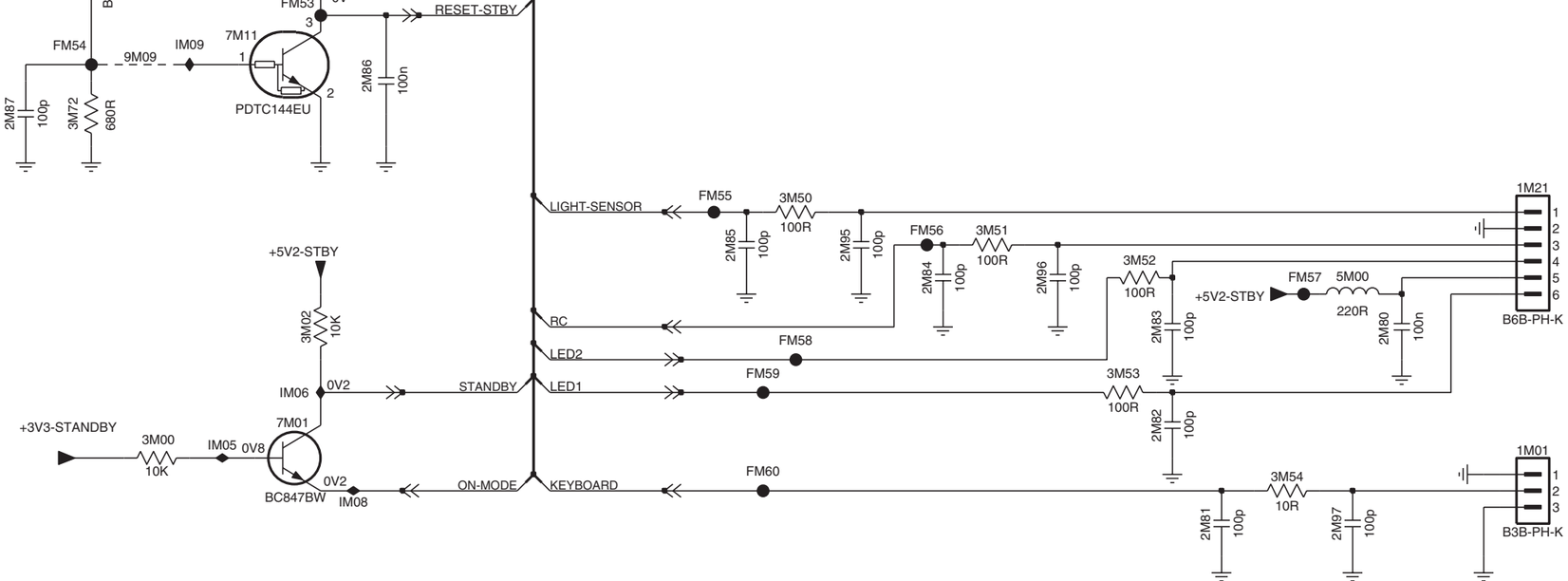

1M01 E8
1M21 D8
2M80 D7
2M81 E6
2M82 E6
2M83 D6
2M84 D5
2M85 D4
2M86 C3
2M87 D1
2M91 B2
2M92 B2
2M93 B5
2M94 B5
2M95 D5
2M96 D5
2M97 E7
3M00 E2
3M02 D2
3M50 D4
3M51 D5
3M52 D6
3M53 E6
3M54 E7
3M71 C2
3M72 D1
5M00 D7
6M10 C1
7M01 E2
7M05 A1
7M06 A4
7M11 C2
9M09 C2
FM50 A5
FM51 C1
FM52 C2
FM53 C2
FM54 C1
FM55 D4
FM56 D5
FM57 D7
FM58 E4
FM59 E4
FM60 E4
IM05 E2
IM06 E2
IM08 E2
IM09 C2

3104 313 6173.1

G_16840_057.eps
220107

SSB: Display Interface: MOP

B06 DISPLAY INTERFACE: MOP

B06

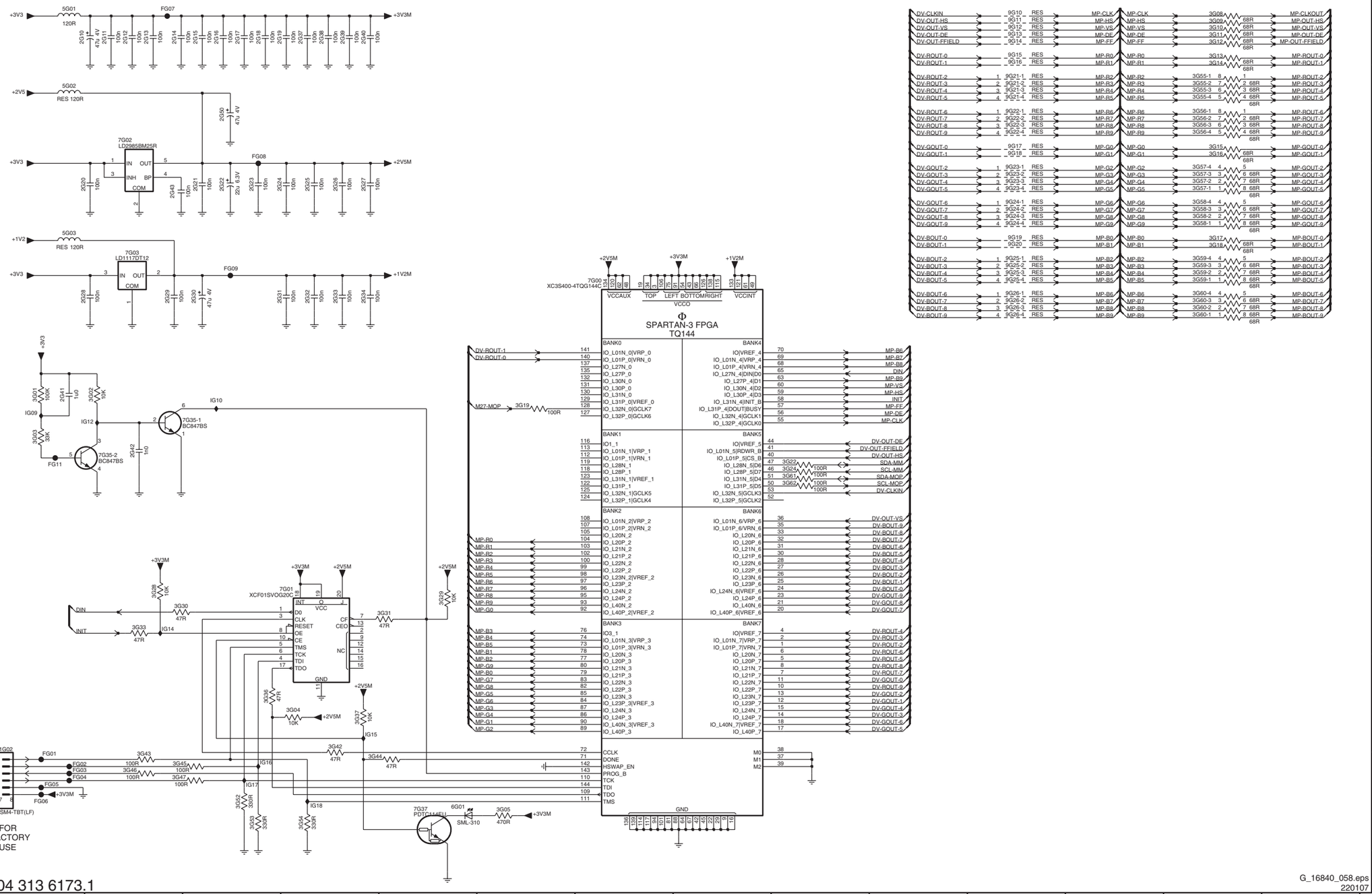

1G02 H1	7G35-2 E2
2G10 A1	7G37 I5
2G11 A2	9G10 A11
2G12 A2	9G11 A11
2G13 A2	9G12 A11
2G14 A2	9G13 A11
2G15 A3	9G14 A11
2G16 A3	9G15 A11
2G17 A3	9G16 A11
2G18 A3	9G17 B11
2G19 A4	9G18 B11
2G20 C2	9G19 C11
2G21 C3	9G20 C11
2G22 C3	9G21-1 B11
2G23 C3	9G21-2 B11
2G24 C4	9G21-3 B11
2G25 C4	9G21-4 B11
2G26 C4	9G22-1 B11
2G27 C4	9G22-2 B11
2G28 D2	9G22-3 B11
2G29 D2	9G22-4 B11
2G30 D3	9G23-1 C11
2G31 D4	9G23-2 C11
2G32 D4	9G23-3 C11
2G33 D4	9G23-4 C11
2G34 D4	9G24-1 C11
2G37 A4	9G24-2 C11
2G38 A4	9G24-3 C11
2G39 A4	9G24-4 C11
2G40 A4	9G25-1 C11
2G41 E1	9G25-2 D11
2G42 E2	9G25-3 D11
2G43 C2	9G25-4 D11
2G50 B3	9G26-1 D11
3G01 E1	9G26-2 D11
3G02 E2	9G26-3 D11
3G03 E1	9G26-4 D11
3G04 H4	FG01 I1
3G05 I6	FG02 I1
3G08 A13	FG03 I1
3G09 A13	FG04 I1
3G10 A13	FG05 I1
3G11 A13	FG06 I1
3G12 A13	FG07 A2
3G13 A13	FG08 B3
3G14 A13	FG09 D3
3G15 B13	FG11 F1
3G16 B13	IG09 E1
3G17 C13	IG10 E3
3G18 C13	IG12 E2
3G19 E6	IG14 G2
3G22 F9	IG15 H4
3G24 F9	IG16 I3
3G28 G2	IG17 I3
3G29 G5	IG18 I4
3G30 G2	
3G31 G5	
3G33 G2	
3G36 H3	
3G37 H4	
3G42 H4	
3G43 I2	
3G44 I4	
3G45 I2	
3G46 I2	
3G47 I2	
3G52 I3	
3G53 I3	
3G54 I4	
3G55-1 B13	
3G55-2 B13	
3G55-3 B13	
3G55-4 B13	
3G56-1 B13	
3G56-2 B13	
3G56-3 B13	
3G56-4 B13	
3G57-1 C13	
3G57-2 C13	
3G57-3 C13	
3G57-4 C13	
3G58-1 C13	
3G58-2 C13	
3G58-3 C13	
3G58-4 C13	
3G59-1 D13	
3G59-2 D13	
3G59-3 D13	
3G59-4 C13	
3G60-1 D13	
3G60-2 D13	
3G60-3 D13	
3G60-4 D13	
3G61 F9	
3G62 F9	
5G01 A1	
5G02 B1	
5G03 C1	
6G01 I5	
7G00 D7	
7G01 G4	
7G02 B2	
7G03 C2	
7G35-1 E2	

SSB: HDMI & Supply

B07A HDMI + SUPPLY

B07A

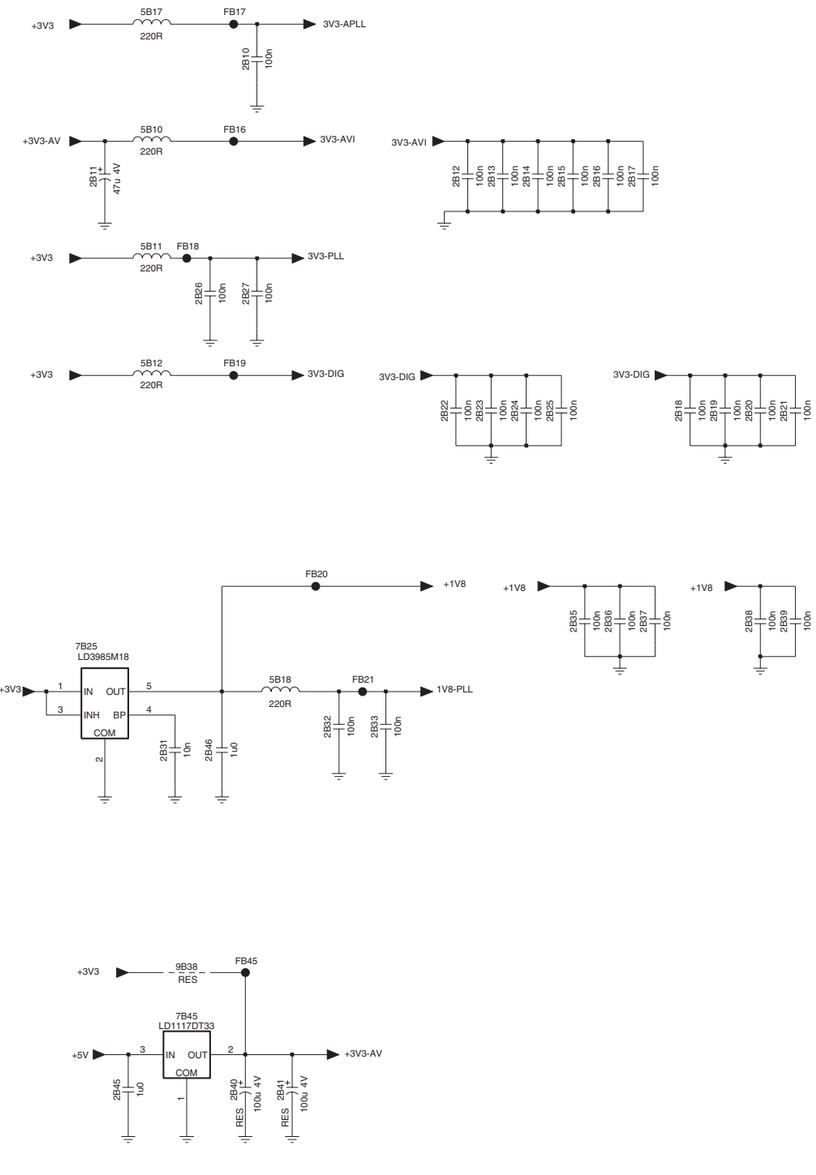

2B10 B10
2B11 C9
2B12 C11
2B13 C11
2B14 C12
2B15 C12
2B16 C12
2B17 C12
2B18 E13
2B19 E13
2B20 E13
2B21 E13
2B22 E11
2B23 E11
2B24 E12
2B25 E12
2B26 D10
2B27 D10
2B31 G9
2B32 G10
2B33 G11
2B35 F12
2B36 F12
2B37 F12
2B38 F13
2B39 F13
2B40 I10
2B41 I10
2B45 I9
2B46 G10
5B10 C9
5B11 D9
5B12 D9
5B17 B9
5B18 F10
7B25 F9
7B45 H10
9B38 H10
FB16 C10
FB17 B10
FB18 D10
FB19 D10
FB20 F10
FB21 F11
FB45 H10

3104 313 6173.1

G_16840_059.eps
220107

SSB: HDMI I/O & Control

B07B HDMI: I/O + CONTROL

B07B

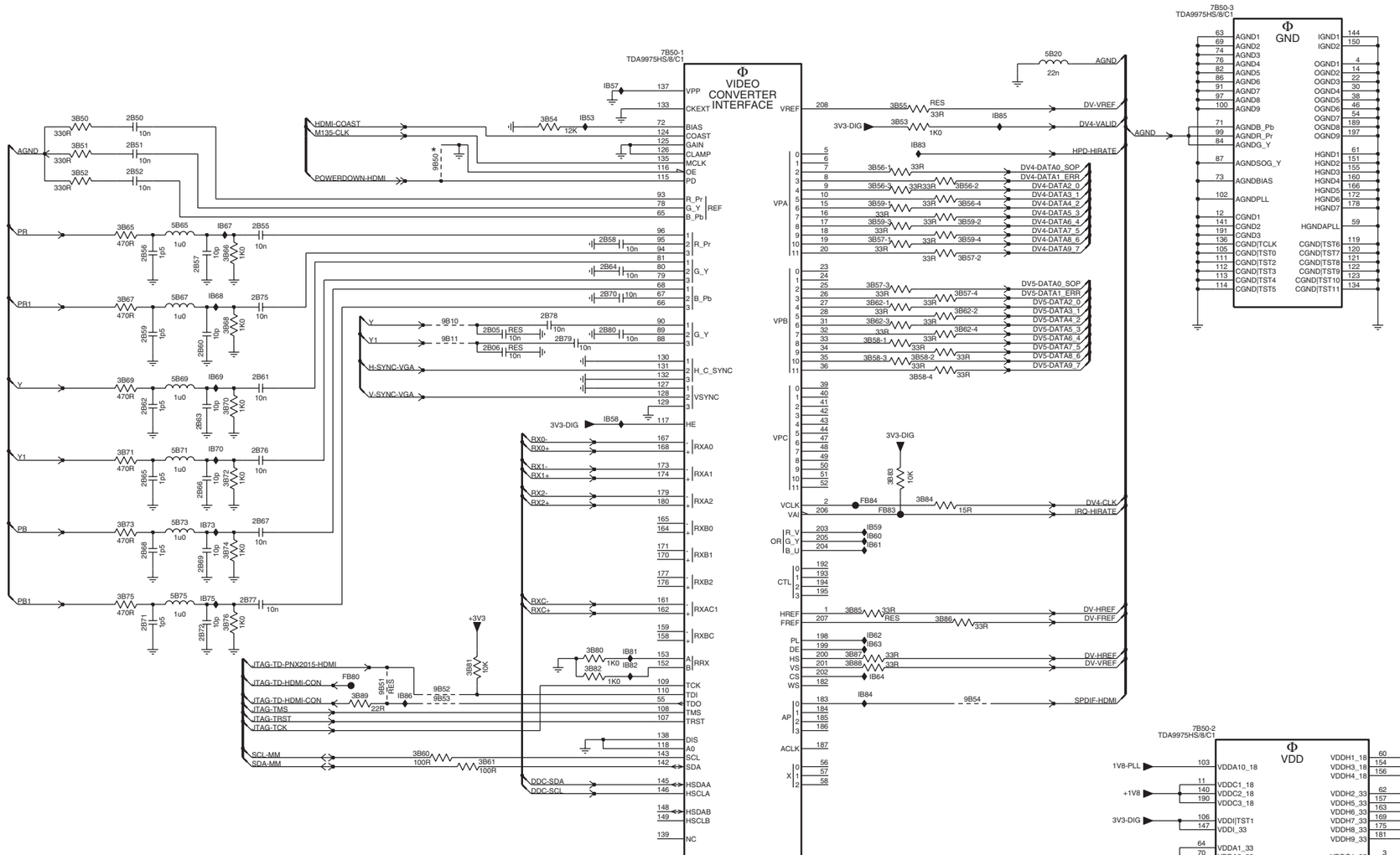

3104 313 6173.1

G_16840_060.eps
220107

2B05 D5
2B06 D5
2B50 C2
2B51 C2
2B52 C2
2B55 C3
2B56 D2
2B57 D3
2B58 D6
2B59 D2
2B60 D3
2B61 E3
2B62 E2
2B63 E3
2B64 D6
2B65 E2
2B66 F3
2B67 F3
2B68 F2
2B69 F3
2B70 D6
2B71 G2
2B72 G3
2B75 D3
2B76 E3
2B77 F3
2B78 D5
2B79 E5
2B80 D6
3B50 C2
3B51 C2
3B52 C2
3B53 C8
3B54 C5
3B55 C8
3B56-1 C8
3B56-2 C9
3B56-3 C8
3B56-4 C9
3B57-1 D8
3B57-2 D9
3B57-3 D8
3B57-4 D9
3B58-1 D8
3B58-2 E8
3B58-3 E8
3B58-4 E8
3B59-1 C8
3B59-2 C9
3B59-3 C8
3B59-4 D9
3B60 H4
3B61 H5
3B62-1 D8
3B62-2 D9
3B62-3 D8
3B62-4 D9
3B65 C2
3B66 D3
3B67 D2
3B68 D3
3B69 E2
3B70 E3
3B71 E2
3B72 E3
3B73 F2
3B74 F3
3B75 F2
3B76 G3
3B80 G6
3B81 G5
3B82 G6
3B83 E8
3B84 F8
3B85 G8
3B86 G9
3B87 G8
3B88 G8
3B89 G4
5B20 B9
5B65 C2
5B67 D2
5B69 E2
5B71 E2
5B73 F2
5B75 F2
7B50-1 B6
7B50-2 G11
7B50-3 B11
9B10 D5
9B11 D5
9B50 C4
9B51 G4
9B52 G5
9B53 G5
9B54 G9
FB80 G4
FB83 F8
FB84 F8
IB53 C6
IB57 B6
IB58 E6
IB59 F8
IB60 F8
IB61 F8
IB62 G8
IB63 G8
IB64 G8
IB67 C3
IB68 D3
IB69 E3
IB70 E3
IB73 F3
IB75 F3
IB81 G6
IB82 G6
IB83 C8
IB84 G8
IB85 C9
IB86 G4

SSB: Analog I/O

B07C ANALOG I/O

B07C

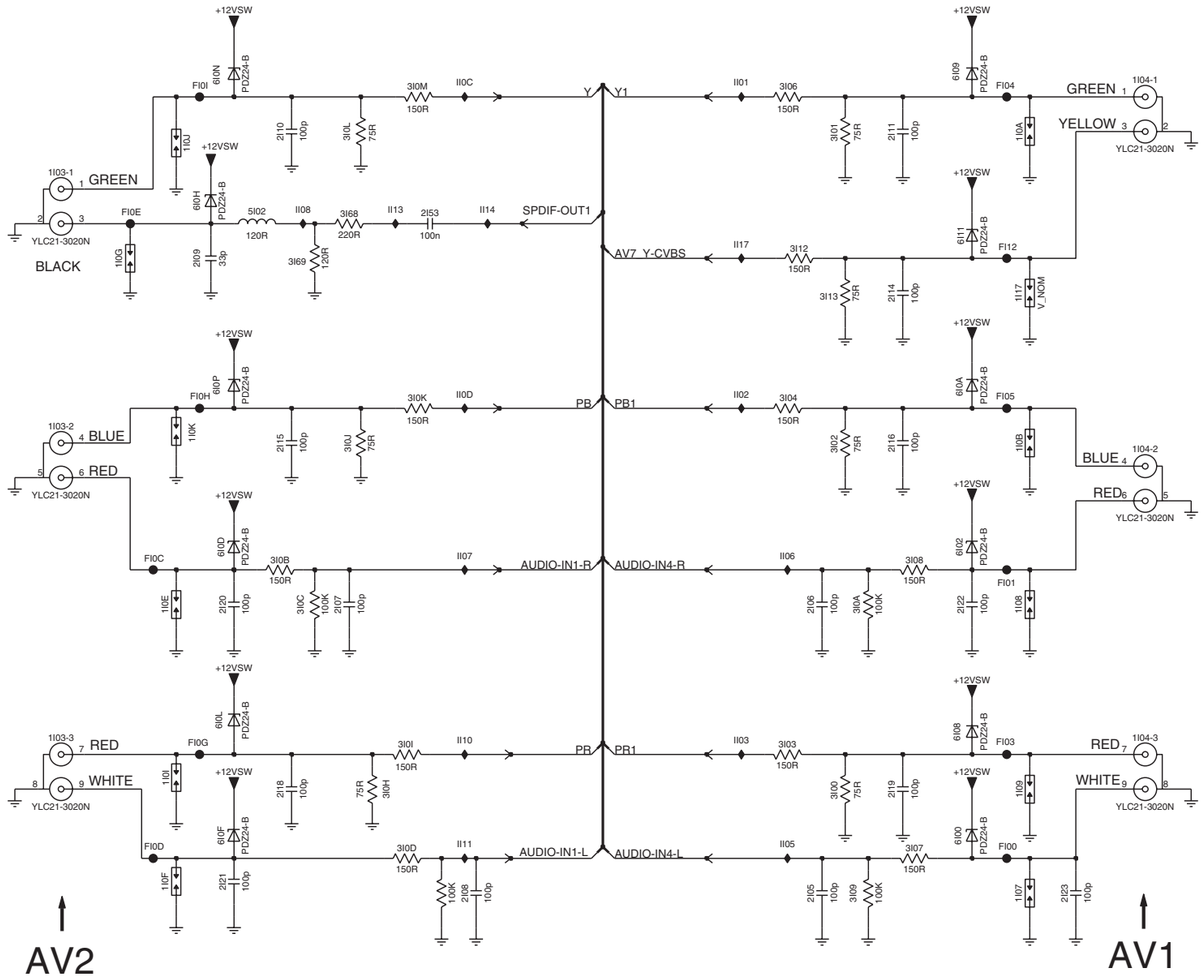

3104 313 6173.1

G_16840_061.eps
220107

1I03-1 C1
1I03-2 D1
1I03-3 F1
1I04-1 B8
1I04-2 E8
1I04-3 F8
1I07 G7
1I08 F7
1I09 G7
1I0A C7
1I0B E7
1I0E F1
1I0F G1
1I0G C1
1I0I G1
1I0J C2
1I0K E2
1I17 D7
2I05 G5
2I06 F5
2I07 F3
2I08 G3
2I09 C2
2I10 C2
2I11 C6
2I14 D6
2I15 E2
2I16 E6
2I18 G2
2I19 G6
2I20 F2
2I21 G2
2I22 F6
2I23 G7
2I53 C3
3I00 G6
3I01 C6
3I02 E6
3I03 F5
3I04 D5
3I06 B5
3I07 G6
3I08 E6
3I09 G6
3I0A F6
3I0B E2
3I0C F2
3I0D G3
3I0E G3
3I0H G3
3I0I F3
3I0J E3
3I0K D3
3I0L C3
3I0M B3
3I12 C5
3I13 D6
3I68 C3
3I69 C2
5I02 C2
6I00 G6
6I02 E6
6I08 F6
6I09 B6
6I0A D6
6I0D E2
6I0F G2
6I0H C2
6I0L F2
6I0N B2
6I0P D2
6I11 C6
FI00 G7
FI01 E7
FI03 F7
FI04 B7
FI05 D7
FI0C E1
FI0D G1
FI0E C1
FI0G F2
FI0H D2
FI0I B2
FI12 C7
II01 B5
II02 D5
II03 F5
II05 G5
II06 E5
II07 E3
II08 C2
II0C B3
II0D D3
II10 F3
II11 G3
II13 C3
II14 C3
II17 C5

SSB: Uart

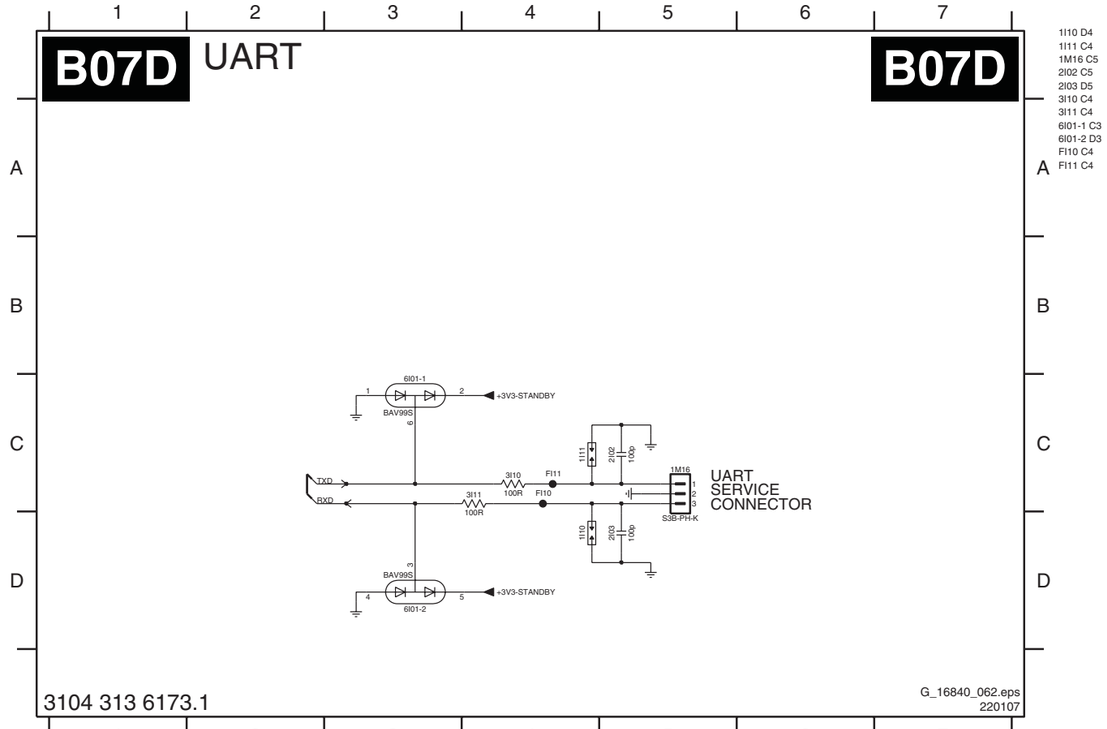

Personal Notes:

E_06532_012.eps
131004

SSB: HDMI

B07E HDMI

B07E

HDMI CONNECTOR 1

DDC NVM HDMI 1

HDMI CONNECTOR 2

DDC NVM HDMI 2

G_16840_063.eps
220107

1C00 B3 IC09 B12
1C01 B3 IC10 C4
1C02 B3 IC11 E6
1C03 B10 IC12 F6
1C04 B10 IC13 F6
1C05 B10
1C06 D11
1C07 D4
1I05 B1
1I06 B8
2C00 B4
2C01 B4
2C02 D4
2C03 D5
2C04 D11
2C05 D12
2C06 B11
2C07 B11
2C08 F11
2C09 F11
2C10 F11
2C11 F11
2C12 F11
2C13 F11
2C14 F12
2C15 F12
2C16 F12
2C17 F12
2C18 F12
2C19 F13
2C20 G11
2C21 G11
3C00 C1
3C01 C2
3C02 C5
3C03 C5
3C04 C6
3C05 C5
3C06 C5
3C07 D6
3C08 D4
3C09 D3
3C10 E3
3C11 B5
3C12 B6
3C13 C9
3C14 C9
3C15 B12
3C16 B13
3C17 C13
3C18 C12
3C19 C12
3C20 C12
3C21 C12
3C22 D10
3C23 E10
3C24 D11
3C25 D13
3C26 D11
3C27 D4
3C28 E6
3C29 E6
3C30 F6
3C31 F6
5C00 B4
5C01 B11
5C02 E11
5C03 F11
5C04 G11
6C00 D3
6C01 D4
6C02 D10
6C03 D11
7C00 C4
7C01 F7
7C02 C11
7C03 D12
7C04 D5
7C05 E6
9C00 C2
9C01 C9
9C03 A6
9C04 F6
9C05 F6
9C06 F6
FC00 C1
FC01 C1
FC03 C1
FC04 C1
FC05 C1
FC06 C1
FC07 B4
FC08 B4
FC09 C5
FC10 G12
FC11 F12
FC12 E12
FC13 B11
FC14 B11
FC15 C9
FC16 C8
FC17 C8
FC18 C9
FC19 C9
FC20 C8
FC21 C12
FC22 C1
IC01 D5
IC02 B6
IC03 B13
IC04 B14
IC05 B7
IC06 D5
IC07 D12
IC08 D12

SSB: Audio: Amplifier

1DM1 H8 | 2D01 B4 | 2D02 B5 | 2D03 C5 | 2D11 B2 | 2D14 E7 | 2D15 E7 | 2D17 E15 | 2D18 E15
2D19 F2 | 2D20 F7 | 2D21 G14 | 2D22 H14 | 2D23 E14 | 2D26 F2 | 2D27 F9 | 2D28 H7 | 2D30 F3
2D31 F11 | 2D32 F6 | 2D35 G2 | 2D36 G10 | 2D37 G6 | 2D38 H2 | 2D39 F13 | 2D40 G13 | 2D41 H7
2D42 H7 | 2D43 H14 | 2D44 H15 | 2D45 H3 | 2D46 H10 | 2D47 H2 | 2D48 H3 | 2D49 H10 | 2D50 H10
2D51 C8 | 2D52 E6 | 2D53 F7 | 2D54 F14 | 2D55 F2 | 2D56 F6 | 2D57 F14 | 2D58 G14 | 2D59 G6
2D60 H9 | 2D61 H9 | 2D62 H9 | 2D63 C6 | 2D64 E9 | 2D65 F9 | 2D66 F9 | 2D67 H2 | 2D68 H10
2D70 C4 | 2D71 G1 | 2D72 F10 | 2D73 G3 | 2D74 G10 | 3D01 B5 | 3D10 A3 | 3D12 A4 | 3D13 B2
3D14 B2 | 3D15 B5 | 3D16 B6 | 3D17 B2 | 3D18 B2 | 3D19 C5 | 3D20 C6 | 3D21 C3 | 3D22 C6
3D23 D4 | 3D24 C4 | 3D25 C3 | 3D26 D4 | 3D34 E3 | 3D35 E4 | 3D37 E11 | 3D38 E11 | 3D39-1 F4
3D39-2 E4 | 3D39-3 G3 | 3D39-4 E5 | 3D40-1 F11 | 3D40-2 G11 | 3D40-3 E13 | 3D40-4 E13 | 3D42 C3 | 3D43 E1
3D44 F5 | 3D45 F12 | 3D46 F6 | 3D47 F13 | 3D49 E1 | 3D50 F1 | 3D51 F9 | 3D54 F1 | 3D56 G2
3D57 G9 | 3D58 G11 | 3D60 F6 | 3D61 F13 | 3D64 G4 | 3D65 G11 | 3D67 G3 | 3D68 G3 | 3D69 G10
3D70 G11 | 3D71 H3 | 3D72 H11 | 3D73 H3 | 3D74 H11 | 3D75 B9 | 3D76 G5 | 3D77 E6 | 3D78 E12
3D79 G12 | 3D81 G4 | 3D82 C7 | 3D83 C7 | 3D84 B8 | 3D85 B8 | 3D86 C10 | 3D87 C10 | 3D88 C10
3D89 B4 | 3D90 E9 | 3D91 E9 | 5D10 E7 | 5D11 E15 | 5D12 F6 | 5D13 F14 | 7D10-1 B3 | 7D10-2 F3
5D16 G2 | 5D18 F6 | 5D19 F14 | 6D10 B4 | 6D11 C4 | 7D14 F4 | 7D21-1 F12 | 7D26-1 C9 | 7D26-2 B10
7D11-1 B6 | 7D11-2 C5 | 7D12-1 D4 | 7D12-2 C4 | 7D16-1 F5 | 7D16-2 F4 | 7D23-1 E13 | 9D03-1 F6 | 9D03-2 F6
7D18-1 E5 | 7D18-2 G5 | 7D19 F11 | 7D20 E12 | 7D21-1 F12 | 7D22 G12 | 7D23-2 G12 | 9D03-3 G6 | 9D03-4 G6
7D24 E2 | 7D25-1 C8 | 7D25-2 B9 | 9D04-1 F13 | 9D04-2 F13 | 9D04-3 F13 | 9D04-4 G13 | FD26 F2 | FD27 G10
9D03-3 G6 | 9D03-4 G6 | FD54 B3 | FD73 C9 | ID10 E7 | ID11 E15 | ID12 E11 | ID13 E4 | ID14 F5
FD49 B3 | ID16 F6 | ID17 F13 | ID18 B5 | ID20 F2 | ID21 F11 | ID22 F12 | ID23 F4 | ID24 F8
ID28 G4 | ID29 G12 | ID30 C7 | ID31 B8 | ID32 G5 | ID33 G12 | ID34 G3 | ID35 G6 | ID36 G4
ID37 G11 | ID38 G10 | ID39 G2 | ID40 G7 | ID41 G15 | ID42 G3 | ID43 G10 | ID44 G4 | ID45 F3
ID46 H3 | ID47 H11 | ID48 B6 | ID50 B5 | ID51 B4 | ID52 B2 | ID53 B4 | ID55 C6 | ID56 C4
ID57 C3 | ID60 B4 | ID61 C4 | ID62 F1 | ID63 C7 | ID64 F14 | ID65 F6 | ID66 F9 | ID67 E9
ID70 B8 | ID71 C10 | ID72 C10 | ID74 F9 | ID75 F11 | ID76 F11 | ID77 F14 | ID78 F13 | ID80 E1
ID81 F1 | ID82 F5 | ID83 F6 | ID86 F4 | ID87 F4 | ID91 C10 | ID92 E6 | ID93 E6 | cD01 D15
cD04 D15 | cD05 E15

B08A AUDIO: AMPLIFIER

B08A

** = overcurrent protection

DIVERSITY LIST

POS	2x8W (8 ohm)	2x15W (8 ohm)
2D15	100uF/16V	----------
2D18	100uF/16V	----------
2D22	----------	100uF/25V
2D23	----------	100uF/25V
2D26	100nF/16V	100nF/25V
2D27	100nF/16V	100nF/25V
2D28	----------	100uF/25V
2D42	100uF/16V	----------
2D44	100uF/16V	----------
2D48	2n2	1n5
2D50	2n2	1n5
2D52	----------	100uF/25V
2D53	----------	470nF/25V
2D54	----------	470nF/25V
2D55	----------	1n5
2D56	2n2	----------
2D57	2n2	----------
2D58	2n2	----------
2D59	2n2	----------
3D25	2K2	1K0
3D35	1K2	1K0
3D38	1K2	1K0
3D49	----------	15K
3D50	10K	3K9
3D51	10K	3K9
3D54	----------	47K
3D64	1K2	1K0
3D65	1K2	1K0
3D90	----------	
3D91	1K2	
5D12	----------	33uH
5D13	----------	33uH
5D18	BEAD 0805 220 E 100MHz	----------
5D19	BEAD 0805 220 E 100MHz	----------
6D11	BZX384-C18	BZX384-C27
7D18	SI4532	SI4559
7D23	SI4532	SI4559
7D24	----------	BC817-25W
9D48	JMP	----------

3104 313 6173.1

G_16840_064.eps
220107

SSB: Audio: Connectors

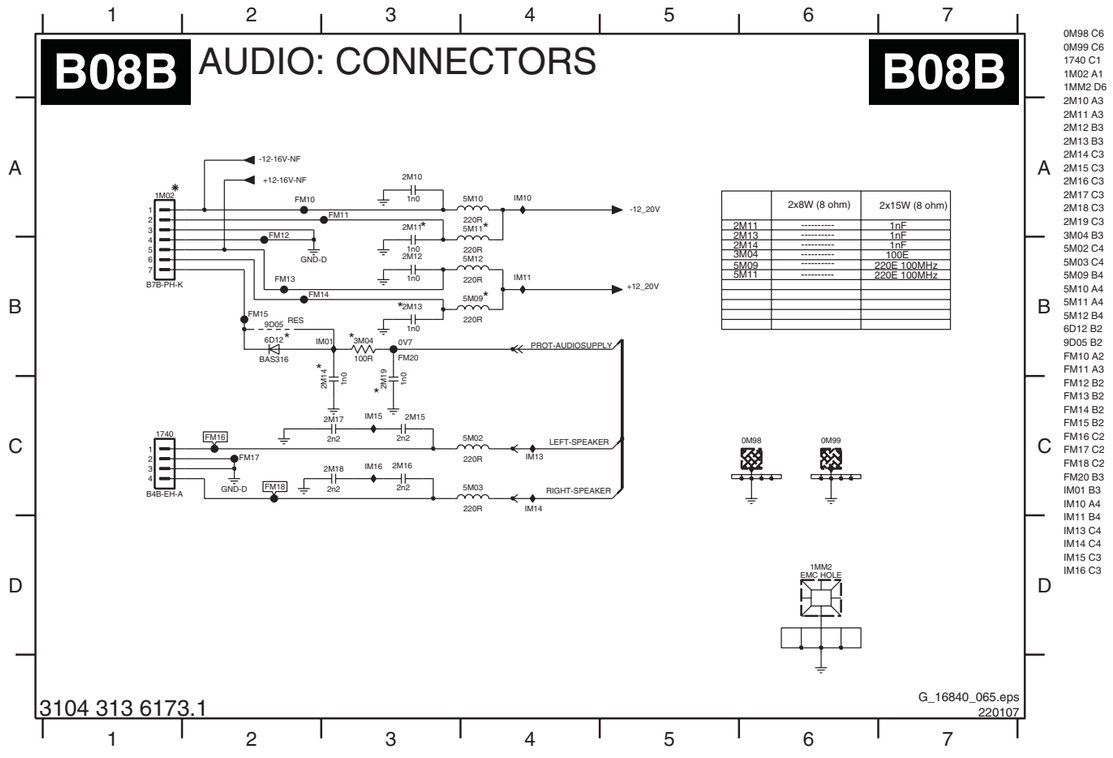

0M98 C6
0M99 C6
1740 C1
1M02 A1
1MM2 D6
2M10 A3
2M11 A3
2M12 B3
2M13 B3
2M14 C3
2M15 C3
2M16 C3
2M17 C3
2M18 C3
2M19 C3
3M04 B3
5M02 C4
5M03 C4
5M09 B4
5M10 A4
5M11 A4
5M12 B4
6D12 B2
9D05 B2
FM10 A2
FM11 A3
FM12 B2
FM13 B2
FM14 B2
FM15 B2
FM16 C2
FM17 C2
FM18 C2
FM20 B3
IM01 B3
IM10 A4
IM11 B4
IM13 C4
IM14 C4
IM15 C3
IM16 C3

SSB: SRP List Explanation

Example

Net Name	*Diagram*
+12-15V	AP1 (4x)
+12-15V	AP4 (4x)
+12-15V	AP5 (12x)
+12-15V	AP6 (4x)
+12-15V	AP7 (8x)
+12V	AP1 (4x)
+12V_NF	AP1 (2x)
+12VAL	AP1 (2x)
+25VLP	AP1 (4x)
+25VLP	AP2 (1x)
+3V3-STANDBY	AP5 (3x)
+400V-F	AP1 (2x)
+400V-F	AP2 (2x)
+400V-F	AP3 (2x)
+5V2	AP1 (6x)
+5V2	AP2 (1x)
+5V2-NF	AP1 (1x)
+5V2-NF	AP2 (1x)
+5V-SW	AP1 (6x)
+5V-SW	AP2 (1x)
+8V6	AP1 (3x)
+AUX	AP1 (2x)
+AUX	AP2 (1x)
+DC-F	AP1 (2x)
+DC-F	AP3 (2x)
+SUB-SPEAKER	AP5 (1x)
+SUB-SPEAKER	AP6 (2x)
-12-15V	AP1 (4x)
-12-15V	AP4 (6x)
-12-15V	AP5 (14x)
-12-15V	AP6 (6x)
-12-15V	AP7 (8x)
AL-OFF	AP1 (2x)
AUDIO-L	AP4 (1x)
AUDIO-L	AP5 (1x)
AUDIO-PROT	AP5 (3x)
AUDIO-R	AP4 (1x)
AUDIO-R	AP5 (1x)
AUDIO-SW	AP5 (1x)
AUDIO-SW	AP7 (1x)
BOOST	AP1 (2x)
CPROT	AP4 (2x)
CPROT	AP5 (1x)
CPROT-SW	AP5 (1x)
CPROT-SW	AP6 (2x)
-DC-F	AP1 (2x)
-DC-F	AP3 (2x)
DC-PROT	AP1 (1x)
DC-PROT	AP5 (2x)
DIM-CONTROL	AP1 (2x)
FEEDBACK+SW	AP6 (2x)
FEEDBACK-L	AP4 (2x)
FEEDBACK-R	AP4 (2x)
FEEDBACK-SW	AP6 (2x)
GND-AL	AP1 (2x)
GNDHA	AP1 (40x)
GNDHA	AP2 (20x)
GNDHA	AP3 (2x)
GNDHOT	AP3 (2x)
GND-L	AP1 (2x)
GND-L	AP4 (4x)
GND-L	AP5 (34x)
GND-LL	AP4 (7x)
GND-LL	AP5 (1x)
GND-LR	AP4 (7x)
GND-LR	AP5 (1x)
GND-LSW	AP5 (1x)
GND-LSW	AP6 (15x)
GND-S	AP1 (11x)
GND-SA	AP4 (8x)
GND-SA	AP5 (2x)
GND-SA	AP6 (8x)
GND-SA	AP7 (6x)
GNDscrew	AP3 (2x)
GNDscrew	AP5 (2x)
GND-SSB	AP5 (3x)
GND-SSP	AP1 (51x)
GND-SSP	AP2 (15x)
IN+SW	AP6 (2x)
IN-L	AP4 (2x)
IN-R	AP4 (2x)
IN-SW	AP6 (2x)
INV-MUTE	AP4 (1x)
INV-MUTE	AP5 (1x)
INV-MUTE	AP6 (1x)
LEFT-SPEAKER	AP4 (1x)
LEFT-SPEAKER	AP5 (1x)
MUTE	AP4 (2x)
MUTE	AP5 (1x)
MUTE	AP6 (2x)
ON-OFF	AP1 (3x)
OUT	AP6 (1x)
OUT	AP7 (2x)
OUTN	AP6 (1x)
OUTN	AP7 (1x)
POWER-GOOD	AP1 (2x)
POWER-OK-PLATFORM	AP1 (2x)
RIGHT-SPEAKER	AP4 (1x)
RIGHT-SPEAKER	AP5 (1x)
SOUND-ENABLE	AP5 (3x)
STANDBY	AP1 (5x)
STANDBY	AP2 (1x)
-SUB-SPEAKER	AP5 (1x)
-SUB-SPEAKER	AP6 (2x)
V-CLAMP	AP1 (1x)
V-CLAMP	AP3 (2x)

1.1. Introduction

SRP (Service Reference Protocol) is a software tool that creates a list with all references to signal lines. The list contains references to the signals within all schematics of a PWB. It replaces the text references currently printed next to the signal names in the schematics. These printed references are created manually and are therefore not guaranteed to be 100% correct. In addition, in the current crowded schematics there is often none or very little place for these references.
Some of the PWB schematics will use SRP while others will still use the manual references. Either there will be an SRP reference list for a schematic, or there will be printed references in the schematic.

1.2. Non-SRP Schematics

There are several different signals available in a schematic:

1.2.1. Power Supply Lines

All power supply lines are available in the supply line overview (see chapter 6). In the schematics (see chapter 7) is not indicated where supplies are coming from or going to.
It is however indicated if a supply is incoming (created elsewhere), or outgoing (created or adapted in the current schematic).

1.2.2. Normal Signals

For normal signals, a schematic reference (e.g. B14b) is placed next to the signals.

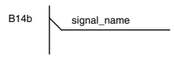

1.2.3. Grounds

For normal and special grounds (e.g. GNDHOT or GND3V3 etc.), nothing is indicated.

1.3. SRP Schematics

SRP is a tool, which automatically creates a list with signal references, indicating on which schematic the signals are used.
A reference is created for all signals indicated with an SRP symbol, these symbols are:

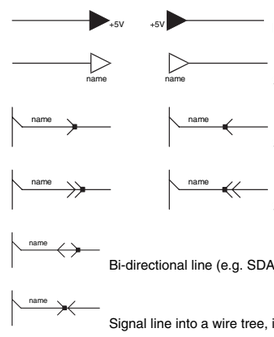

Remarks:

- When there is a black dot on the "signal direction arrow" it is an SRP symbol, so there will be a reference to the signal name in the SRP list.
- All references to normal grounds (Ground symbols without additional text) are not listed in the reference list, this to keep it concise.
- Signals that are not used in multiple schematics, but only once or several times in the same schematic, are included in the SRP reference list, but only with one reference.

Additional Tip:

When using the PDF service manual file, you can very easily search for signal names and follow the signal over all the schematics. In Adobe PDF reader:

- Select the signal name you want to search for, with the "Select text" tool.
- Copy and paste the signal name in the "Search PDF" tool.
- Search for all occurrences of the signal name.
- Now you can quickly jump between the different occurrences and follow the signal over all schematics. It is advised to "zoom in" to e.g. 150% to see clearly, which text is selected. Then you can zoom out, to get an overview of the complete schematic.

PS. It is recommended to use at least Adobe PDF (reader) version 6.x, due to better search possibilities in this version.

E_06532_031.eps
230606

SSB: SRP List Part 1

Netname	Schematic
+12_20V	B08A
+12_20V	B08B
+12-16V-NF	B01B
+12-16V-NF	B08B
+12VS	B01A
+12VS	B01B
+12VSW	B01A
+12VSW	B01B
+12VSW	B02A
+12VSW	B02B
+12VSW	B03E
+12VSW	B04A
+12VSW	B04E
+12VSW	B04G
+12VSW	B07C
+1V2	B01A
+1V2	B02A
+1V2	B04E
+1V2	B05D
+1V2	B06
+1V2_ATSC	B02A
+1V2F	B02A
+1V2M	B06
+1V2-STANDBY	B04E
+1V2-STANDBY	B05F
+1V8	B07A
+1V8	B07B
+2V5	B01A
+2V5	B02A
+2V5	B04D
+2V5	B05D
+2V5	B06
+2V5A	B02A
+2V5A-ADC	B02A
+2V5A-PLL	B02A
+2V5A-XTAL	B02A
+2V5D	B01A
+2V5-DDRPNX	B04D
+2V5-DDRPNX	B04F
+2V5D-PLL	B02A
+2V5F	B02A
+2V5M	B06
+2V5-VPR	B05B
+2V5-VPR	B05D
+3V3	B01A
+3V3	B01B
+3V3	B02A
+3V3	B04E
+3V3	B04G
+3V3	B05A
+3V3	B05C
+3V3	B05D
+3V3	B05E
+3V3	B06
+3V3	B07A
+3V3	B07B
+3V3	B07E
+3V3-ANA-MUX	B07E
+3V3-AV	B07A
+3V3-DIG-MUX	B07E
+3V3F	B02A
+3V3M	B06
+3V3-STANDBY	B03A
+3V3-STANDBY	B04E
+3V3-STANDBY	B04G
+3V3-STANDBY	B05E
+3V3-STANDBY	B05F
+3V3-STANDBY	B07D
+3V3-STANDBY	B08A
+3V3-UART	B01B
+5V	B01B
+5V	B02A
+5V	B03A
+5V	B03B
+5V	B03C
+5V	B03E
+5V	B04E
+5V	B04G
+5V	B05A
+5V	B07A
+5V2-STBY	B01B
+5V2-STBY	B03E
+5V2-STBY	B04A
+5V2-STBY	B05E
+5V2-STBY	B05F
+5VaM	B03C
+5VbM	B03C
+5V-CON	B07E
+5V-MUX	B07E
+5VTUN	B02B
+5VTUN	B03C
+5VTUN	B03D
+8V-AUD	B03D
+8V-AUD	B03E
-12_20V	B08A
-12_20V	B08B
-12-16V-NF	B01B
-12-16V-NF	B08B
1V8-PLL	B07A
1V8-PLL	B07B
3V3-APLL	B07A
3V3-APLL	B07B
3V3-AVI	B07A
3V3-AVI	B07B
3V3-DIG	B07A
3V3-DIG	B07B
3V3-PLL	B07A
3V3-PLL	B07B
ADAC1	B04A
ADAC1	B08A
ADAC2	B04A
ADAC2	B08A
ADAC7	B03E
ADAC7	B04A
ADAC8	B03E
ADAC8	B04A
AGND	B07B
AIN-5V	B07E
ALE	B04E
A-PLOP	B03E
A-PLOP	B04A
A-PLOP	B05A
ARX0-	B07E
ARX0+	B07E
ARX1-	B07E
ARX1+	B07E
ARX2-	B07E
ARX2+	B07E
ARXC-	B07E
ARXC+	B07E
ARX-DDC-SCL	B07E
ARX-DDC-SDA	B07E
ARX-HOTPLUG	B07E
AUDIO-HDPH-L-AP	B03A
AUDIO-HDPH-L-AP	B03E
AUDIO-HDPH-R-AP	B03A
AUDIO-HDPH-R-AP	B03E
AUDIO-IN1-L	B03D
AUDIO-IN1-L	B07C
AUDIO-IN1-R	B03D
AUDIO-IN1-R	B07C
AUDIO-IN3-L	B03A
AUDIO-IN3-L	B03D
AUDIO-IN3-R	B03A
AUDIO-IN3-R	B03D
AUDIO-IN4-L	B03D
AUDIO-IN4-L	B07C
AUDIO-IN4-R	B03D
AUDIO-IN4-R	B07C
AUDIO-IN5-L	B03A
AUDIO-IN5-L	B03D
AUDIO-IN5-R	B03A
AUDIO-IN5-R	B03D
AUDIO-OUT1-L	B03A
AUDIO-OUT1-L	B03D
AUDIO-OUT1-R	B03A
AUDIO-OUT1-R	B03D
AUX-IF-AGC	B02A
AUX-IF-AGC	B02B
AV1-AV6_FBL-HSYNC	B03A
AV1-AV6_FBL-HSYNC	B04A
AV2_FBL	B04A
AV6_VSYNC	B04A
AV7_Y-CVBS	B03A
AV7_Y-CVBS	B07C
AV-BOUT	B04G
AV-GOUT	B04G
AV-ROUT	B04G
BACKLIGHT-CNTRL-OUT	B01B
BACKLIGHT-CNTRL-OUT	B04G
BACKLIGHT-CONTROL	B04E
BACKLIGHT-CONTROL	B04G
BACKLIGHT-CONTROL	B05C
BIN-5V	B07E
BRX0-	B07E
BRX0+	B07E
BRX1-	B07E
BRX1+	B07E
BRX2-	B07E
BRX2+	B07E
BRXC-	B07E
BRXC+	B07E
BRX-DDC-SCL	B07E
BRX-DDC-SDA	B07E
BRX-HOTPLUG	B07E
CHDEC-CLK	B02A
CHDEC-CLK	B05A
CHDEC-CLK	B05C
CLK-MPIF	B03B
CLK-MPIF	B04A
CPROT	B08A
CTRL1-VIPER	B04G
CTRL1-VIPER	B05C
CTRL4-STBY	B04E
CTRL4-STBY	B04G
CTRL4-VIPER	B04G
CTRL4-VIPER	B05A
CTRL-DISP1	B04G
CTRL-DISP2	B04G
CTRL-DISP3	B04G
CTRL-DISP4	B04G
CVBS-IN	B03A
CVBSOUTIF-MAIN	B03A
CVBSOUTIF-MAIN	B03C
DATA1N-MAIN	B03A
DATA1N-MAIN	B04A
DATA1P-MAIN	B03A
DATA1P-MAIN	B04A
DATA2N-MAIN	B03A
DATA2N-MAIN	B04A
DATA2P-MAIN	B03A
DATA2P-MAIN	B04A
DATA3N-MAIN	B03A
DATA3N-MAIN	B04A
DATA3P-MAIN	B03A
DATA3P-MAIN	B04A
DDC-SCL	B07B
DDC-SCL	B07E
DDC-SDA	B07B
DDC-SDA	B07E
DEBUG-BREAK	B04E
DEBUG-BREAK	B05A
DETECT-12V	B04E
DETECT-1V2	B04E
DETECT-3V3	B04E
DETECT-5V	B04E
DETECT-8V6	B04E
DIN	B06
DMMI_B-PB-IN	B03A
DMMI_G-Y-IN	B03A
DMMI_R-PR-IN	B03A
DSNDL1	B03D
DSNDL1	B04A
DSNDR1	B03D
DSNDR1	B04A
DV1F-CLK	B02A
DV1F-CLK	B05C
DV1F-DATA0	B02A
DV1F-DATA0	B05C
DV1F-DATA1	B02A
DV1F-DATA1	B05C
DV1F-DATA2	B02A
DV1F-DATA2	B05C
DV1F-DATA3	B02A
DV1F-DATA3	B05C
DV1F-DATA4	B02A
DV1F-DATA4	B05C
DV1F-DATA5	B02A
DV1F-DATA5	B05C
DV1F-DATA6	B02A
DV1F-DATA6	B05C
DV1F-DATA7	B02A
DV1F-DATA7	B05C
DV1F-DATA8_ERR	B02A
DV1F-DATA8_ERR	B05C
DV1F-DATA9_SOP	B02A
DV1F-DATA9_SOP	B05C
DV1F-VALID	B02A
DV1F-VALID	B05C
DV2A-CLK	B04B
DV2A-CLK	B05C
DV2A-VALID	B05C
DV3F-CLK	B04B
DV3F-CLK	B05C
DV3F-DATA0_SOP	B04B
DV3F-DATA0_SOP	B05C
DV3F-DATA1_ERR	B04B
DV3F-DATA1_ERR	B05C
DV3F-DATA2_0	B04B
DV3F-DATA2_0	B05C
DV3F-DATA3_1	B04B
DV3F-DATA3_1	B05C
DV3F-DATA4_2	B04B
DV3F-DATA4_2	B05C
DV3F-DATA5_3	B04B
DV3F-DATA5_3	B05C
DV3F-DATA6_4	B04B
DV3F-DATA6_4	B05C
DV3F-DATA7_5	B04B
DV3F-DATA7_5	B05C
DV3F-DATA8_6	B04B
DV3F-DATA8_6	B05C
DV3F-DATA9_7	B04B
DV3F-DATA9_7	B05C
DV3F-VALID	B04B
DV3F-VALID	B05C
DV4-CLK	B04B
DV4-CLK	B07B
DV4-DATA0_SOP	B04B
DV4-DATA0_SOP	B07B
DV4-DATA1_ERR	B04B
DV4-DATA1_ERR	B07B
DV4-DATA2_0	B04B
DV4-DATA2_0	B07B
DV4-DATA3_1	B04B
DV4-DATA3_1	B07B
DV4-DATA4_2	B04B
DV4-DATA4_2	B07B
DV4-DATA5_3	B04B
DV4-DATA5_3	B07B
DV4-DATA6_4	B04B
DV4-DATA6_4	B07B
DV4-DATA7_5	B04B
DV4-DATA7_5	B07B
DV4-DATA8_6	B04B
DV4-DATA8_6	B07B
DV4-DATA9_7	B04B
DV4-DATA9_7	B07B
DV4-VALID	B04B
DV4-VALID	B07B
DV5-DATA0_SOP	B04B
DV5-DATA0_SOP	B07B
DV5-DATA1_ERR	B04B
DV5-DATA1_ERR	B07B
DV5-DATA2_0	B04B
DV5-DATA2_0	B07B
DV5-DATA3_1	B04B
DV5-DATA3_1	B07B
DV5-DATA4_2	B04B
DV5-DATA4_2	B07B
DV5-DATA5_3	B04B
DV5-DATA5_3	B07B
DV5-DATA6_4	B04B
DV5-DATA6_4	B07B
DV5-DATA7_5	B04B
DV5-DATA7_5	B07B
DV5-DATA8_6	B04B
DV5-DATA8_6	B07B
DV5-DATA9_7	B04B
DV5-DATA9_7	B07B
DV-BOUT-0	B05C
DV-BOUT-0	B06
DV-BOUT-1	B05C
DV-BOUT-1	B06
DV-BOUT-2	B05C
DV-BOUT-2	B06
DV-BOUT-3	B05C
DV-BOUT-3	B06
DV-BOUT-4	B05C
DV-BOUT-4	B06
DV-BOUT-5	B05C
DV-BOUT-5	B06
DV-BOUT-6	B05C
DV-BOUT-6	B06
DV-BOUT-7	B05C
DV-BOUT-7	B06
DV-BOUT-8	B05C
DV-BOUT-8	B06
DV-BOUT-9	B05C
DV-BOUT-9	B06
DV-CLKIN	B05C
DV-CLKIN	B06
DV-FREF	B04B
DV-FREF	B07B
DV-GOUT-0	B05C
DV-GOUT-0	B06
DV-GOUT-1	B05C
DV-GOUT-1	B06
DV-GOUT-2	B05C
DV-GOUT-2	B06
DV-GOUT-3	B05C
DV-GOUT-3	B06
DV-GOUT-4	B05C
DV-GOUT-4	B06
DV-GOUT-5	B05C
DV-GOUT-5	B06
DV-GOUT-6	B05C
DV-GOUT-6	B06
DV-GOUT-7	B05C
DV-GOUT-7	B06
DV-GOUT-8	B05C
DV-GOUT-8	B06
DV-GOUT-9	B05C
DV-GOUT-9	B06
DV-HREF	B04B
DV-HREF	B07B
DV-OUT-DE	B05C
DV-OUT-DE	B06
DV-OUT-FFIELD	B05C
DV-OUT-FFIELD	B06
DV-OUT-HS	B05C
DV-OUT-HS	B06
DV-OUT-VS	B04G
DV-OUT-VS	B05C
DV-OUT-VS	B06
DV-ROUT-0	B05C
DV-ROUT-0	B06
DV-ROUT-1	B05C
DV-ROUT-1	B06
DV-ROUT-2	B05C
DV-ROUT-2	B06
DV-ROUT-3	B05C
DV-ROUT-3	B06
DV-ROUT-4	B05C
DV-ROUT-4	B06
DV-ROUT-5	B05C
DV-ROUT-5	B06
DV-ROUT-6	B05C
DV-ROUT-6	B06
DV-ROUT-7	B05C
DV-ROUT-7	B06
DV-ROUT-8	B05C
DV-ROUT-8	B06
DV-ROUT-9	B05C
DV-ROUT-9	B06
DV-VREF	B04B
DV-VREF	B07B
EA	B04E
EJTAG-DETECT	B01B
EJTAG-DETECT	B04E
EJTAG-TCK	B01B
EJTAG-TCK	B05A
EJTAG-TDI	B01B
EJTAG-TDI	B05A
EJTAG-TDO	B01B
EJTAG-TDO	B05A
EJTAG-TMS	B01B
EJTAG-TMS	B05A
ENABLE-1V2	B01A
ENABLE-1V2	B04E
ENABLE-3V3	B01A
ENABLE-3V3	B04E
FAT-ADC-INN	B02A
FAT-ADC-INN	B02B
FAT-ADC-INP	B02A
FAT-ADC-INP	B02B
FAT-IF-AGC	B02A
FAT-IF-AGC	B02B
FEEDBACK	B08A
FEEDBACK-LR	B08A
FEEDBACK-RL	B08A
FM-TRAP	B02A
FM-TRAP	B02B
FRONT_C	B03A
FRONT_Y-CVBS	B03A
FRONT-DETECT	B04E
GLINK-RXD	B01B
GLINK-RXD	B04G
GLINK-RXD	B05A
GLINK-TXD	B01B
GLINK-TXD	B04G
GLINK-TXD	B05A
GND-D	B01B
GND-D	B08A
GND-D	B08B
GND-DL	B08A
GND-DR	B08A
GND-SIG	B01A
H_SYNC_IN	B03A
HDMI-COAST	B05A
HDMI-COAST	B07B
HP-DET-R-DC	B03A
HPD-HIRATE	B05A
HPD-HIRATE	B07B
HPD-HIRATE	B07E
H-SYNC-VGA	B07B
HV-PRM-MAIN	B03A
HV-PRM-MAIN	B04A
I2C-SCL-TUNER	B02A
I2C-SCL-TUNER	B02B
I2C-SDA-TUNER	B02A
I2C-SDA-TUNER	B02B
I2S-BCLK-MAIN	B04A
I2S-BCLK-MAIN	B05C
I2S-MAIN-D	B04A
I2S-MAIN-D	B05C
I2S-MAIN-ND	B04A
I2S-MAIN-ND	B05C
I2S-MCH-CSW	B04A
I2S-MCH-CSW	B05C
I2S-MCH-LR	B04A
I2S-MCH-LR	B05C
I2S-MCH-SLR	B04A
I2S-MCH-SLR	B05C
I2S-SUB-D	B04A
I2S-SUB-D	B05C
I2S-WS-MAIN	B04A
I2S-WS-MAIN	B05C
IF-ANA	B02B
IF-ANA	B03C
INIT	B06
INV-MUTE	B08A
IRQ-AVIP	B04E
IRQ-AVIP	B05A
IRQ-FE-MAIN	B02A
IRQ-FE-MAIN	B05A
IRQ-HD1	B04E
IRQ-HD1	B05A
IRQ-HD2	B04E
IRQ-HD2	B05A
IRQ-HIRATE	B04E
IRQ-HIRATE	B05A
IRQ-HIRATE	B07B
IRQ-MAIN	B05A
IRQ-MPIF	B03B
IRQ-MPIF	B05A
ITV-IR-SW-RESET	B03A
JTAG-TCK	B04E
JTAG-TCK	B05A
JTAG-TCK	B07B
JTAG-TD-CON-VIPER	B05A
JTAG-TD-HDMI-CON	B07B
JTAG-TD-PNX2015-HDMI	B04E
JTAG-TD-PNX2015-HDMI	B07B
JTAG-TD-VIPER-PNX2015	B04E
JTAG-TD-VIPER-PNX2015	B05A
JTAG-TMS	B04E
JTAG-TMS	B05A
JTAG-TMS	B07B
JTAG-TRST	B01B
JTAG-TRST	B04E
JTAG-TRST	B05A
JTAG-TRST	B07B
KEYBOARD	B04E
KEYBOARD	B05F
LAMP-ON	B04E
LAMP-ON	B04G
LAMP-ON-OUT	B01B
LAMP-ON-OUT	B04G
LED1	B04E
LED1	B05F
LED2	B04E
LED2	B05F
LEFT-SPEAKER	B08A
LEFT-SPEAKER	B08B
LIGHT-SENSOR	B04E
LIGHT-SENSOR	B05F
LVDS-3V3	B04F
M135-CLK	B05A
M135-CLK	B07B
M27-MOP	B05A
M27-MOP	B06
M27-PNX	B04E
M27-PNX	B05A
MM_A0	B05B
MM_A1	B05B
MM_A10	B05B
MM_A11	B05B
MM_A12	B05B
MM_A2	B05B
MM_A3	B05B
MM_A4	B05B
MM_A5	B05B
MM_A6	B05B
MM_A7	B05B
MM_A8	B05B
MM_A9	B05B
MM_BA0	B05B
MM_BA1	B05B
MM_CAS	B05B
MM_CKE	B05B
MM_CLK_N	B05B
MM_CLK_P	B05B
MM_CS0	B05B
MM_DATA_0	B05B
MM_DATA_1	B05B
MM_DATA_10	B05B
MM_DATA_11	B05B
MM_DATA_12	B05B
MM_DATA_13	B05B
MM_DATA_14	B05B
MM_DATA_15	B05B
MM_DATA_16	B05B
MM_DATA_17	B05B
MM_DATA_18	B05B
MM_DATA_19	B05B
MM_DATA_2	B05B
MM_DATA_20	B05B
MM_DATA_21	B05B
MM_DATA_22	B05B
MM_DATA_23	B05B
MM_DATA_24	B05B
MM_DATA_25	B05B
MM_DATA_26	B05B
MM_DATA_27	B05B
MM_DATA_28	B05B
MM_DATA_29	B05B
MM_DATA_3	B05B
MM_DATA_30	B05B
MM_DATA_31	B05B
MM_DATA_4	B05B
MM_DATA_5	B05B
MM_DATA_6	B05B
MM_DATA_7	B05B
MM_DATA_8	B05B
MM_DATA_9	B05B
MM_DQM_0	B05B
MM_DQM_1	B05B
MM_DQM_2	B05B
MM_DQM_3	B05B
MM_DQS0	B05B
MM_DQS1	B05B
MM_DQS2	B05B
MM_DQS3	B05B
MM_RAS	B05B
MM_WE	B05B

3104 313 6173.1

G_16840_070.eps
230107

SSB: SRP List Part 2

Netname	Schematic
MP-B0	B06
MP-B1	B06
MP-B2	B06
MP-B3	B06
MP-B4	B06
MP-B5	B06
MP-B6	B06
MP-B7	B06
MP-B8	B06
MP-B9	B06
MP-BOUT-0	B04B
MP-BOUT-0	B06
MP-BOUT-1	B04B
MP-BOUT-1	B06
MP-BOUT-2	B04B
MP-BOUT-2	B06
MP-BOUT-3	B04B
MP-BOUT-3	B06
MP-BOUT-4	B04B
MP-BOUT-4	B06
MP-BOUT-5	B04B
MP-BOUT-5	B06
MP-BOUT-6	B04B
MP-BOUT-6	B06
MP-BOUT-7	B04B
MP-BOUT-7	B06
MP-BOUT-8	B04B
MP-BOUT-8	B06
MP-BOUT-9	B04B
MP-BOUT-9	B06
MP-CLK	B06
MP-CLKOUT	B04B
MP-CLKOUT	B06
MP-DE	B06
MP-FF	B06
MP-G0	B06
MP-G1	B06
MP-G2	B06
MP-G3	B06
MP-G4	B06
MP-G5	B06
MP-G6	B06
MP-G7	B06
MP-G8	B06
MP-G9	B06
MP-GOUT-0	B04B
MP-GOUT-0	B06
MP-GOUT-1	B04B
MP-GOUT-1	B06
MP-GOUT-2	B04B
MP-GOUT-2	B06
MP-GOUT-3	B04B
MP-GOUT-3	B06
MP-GOUT-4	B04B
MP-GOUT-4	B06
MP-GOUT-5	B04B
MP-GOUT-5	B06
MP-GOUT-6	B04B
MP-GOUT-6	B06
MP-GOUT-7	B04B
MP-GOUT-7	B06
MP-GOUT-8	B04B
MP-GOUT-8	B06
MP-GOUT-9	B04B
MP-GOUT-9	B06
MP-HS	B06
MP-OUT-DE	B04B
MP-OUT-DE	B06
MP-OUT-FFIELD	B04B
MP-OUT-FFIELD	B06
MP-OUT-HS	B04B
MP-OUT-HS	B04G
MP-OUT-HS	B06
MP-OUT-VS	B04B
MP-OUT-VS	B04G
MP-OUT-VS	B06
MP-R0	B06
MP-R1	B06
MP-R2	B06
MP-R3	B06
MP-R4	B06
MP-R5	B06
MP-R6	B06
MP-R7	B06
MP-R8	B06
MP-R9	B06
MP-ROUT-0	B04B
MP-ROUT-0	B06
MP-ROUT-1	B04B
MP-ROUT-1	B06
MP-ROUT-2	B04B
MP-ROUT-2	B06
MP-ROUT-3	B04B
MP-ROUT-3	B06
MP-ROUT-4	B04B
MP-ROUT-4	B06
MP-ROUT-5	B04B
MP-ROUT-5	B06
MP-ROUT-6	B04B
MP-ROUT-6	B06
MP-ROUT-7	B04B
MP-ROUT-7	B06
MP-ROUT-8	B04B
MP-ROUT-8	B06
MP-ROUT-9	B04B
MP-ROUT-9	B06
MP-VS	B06
MUTE	B08A
NAND-AD(0)	B05A
NAND-AD(0)	B05E
NAND-AD(1)	B05A
NAND-AD(1)	B05E
NAND-AD(2)	B05A
NAND-AD(2)	B05E
NAND-AD(3)	B05A
NAND-AD(3)	B05E
NAND-AD(4)	B05A
NAND-AD(4)	B05E
NAND-AD(5)	B05A
NAND-AD(5)	B05E
NAND-AD(6)	B05A
NAND-AD(6)	B05E
NAND-AD(7)	B05A
NAND-AD(7)	B05E
NAND-ALE	B05A
NAND-ALE	B05E
NAND-CLE	B05A
NAND-CLE	B05E
NAND-D(10)	B05A
NAND-D(10)	B05E
NAND-D(11)	B05A
NAND-D(11)	B05E
NAND-D(12)	B05A
NAND-D(12)	B05E
NAND-D(13)	B05A
NAND-D(13)	B05E
NAND-D(14)	B05A
NAND-D(14)	B05E
NAND-D(15)	B05A
NAND-D(15)	B05E
NAND-D(8)	B05A
NAND-D(8)	B05E
NAND-D(9)	B05A
NAND-D(9)	B05E
NAND-RBY	B05A
NAND-RBY	B05E
NAND-REn	B05A
NAND-REn	B05E
NAND-SEL	B05A
NAND-SEL	B05E
NAND-WEn	B05A
NAND-WEn	B05E
ON-MODE	B04E
ON-MODE	B04G
ON-MODE	B05F
P0_6	B04E
P3_2	B04E
P4_4	B04E
P50	B04E
P50-HDMI	B04E
P50-HDMI	B07E
PARX-DDC-SCL	B07E
PARX-DDC-SDA	B07E
PB	B07B
PB	B07C
PB1	B07B
PB1	B07C
PBRX-DDC-SCL	B07E
PBRX-DDC-SDA	B07E
PCI-CLK-VPR	B05A
PCI-INTA	B05A
PCI-REQ	B05A
PCI-REQ-A	B05A
PCI-REQ-B	B05A
PLL-1V2	B04F
PLL-3V3	B04F
PLL-OUT	B05A
PNX-MA-0	B04D
PNX-MA-1	B04D
PNX-MA-10	B04D
PNX-MA-11	B04D
PNX-MA-12	B04D
PNX-MA-2	B04D
PNX-MA-3	B04D
PNX-MA-4	B04D
PNX-MA-5	B04D
PNX-MA-6	B04D
PNX-MA-7	B04D
PNX-MA-8	B04D
PNX-MA-9	B04D
PNX-MBA0	B04D
PNX-MBA1	B04D
PNX-MCAS	B04D
PNX-MCKE	B04D
PNX-MCLK-N	B04D
PNX-MCLK-P	B04D
PNX-MCS-0	B04D
PNX-MDATA-0	B04D
PNX-MDATA-1	B04D
PNX-MDATA-10	B04D
PNX-MDATA-11	B04D
PNX-MDATA-12	B04D
PNX-MDATA-13	B04D
PNX-MDATA-14	B04D
PNX-MDATA-15	B04D
PNX-MDATA-2	B04D
PNX-MDATA-3	B04D
PNX-MDATA-4	B04D
PNX-MDATA-5	B04D
PNX-MDATA-6	B04D
PNX-MDATA-7	B04D
PNX-MDATA-8	B04D
PNX-MDATA-9	B04D
PNX-MDQM-0	B04D
PNX-MDQM-1	B04D
PNX-MDQS-0	B04D
PNX-MDQS-1	B04D
PNX-MRAS	B04D
PNX-MWE	B04D
POD-MODE	B01B
POD-MODE	B04E
POWER-DOWN_BOLT-ON	B03A
POWERDOWN-HDMI	B05A
POWERDOWN-HDMI	B07B
POWER-OK-DISPLAY	B04E
PR	B07B
PR	B07C
PR1	B07B
PR1	B07C
PROT-AUDIOSUPPLY	B04E
PROT-AUDIOSUPPLY	B08A
PROT-AUDIOSUPPLY	B08B
PSEN	B04E
RC	B03A
RC	B04E
RC	B05F
RESET-AUDIO	B04A
RESET-AUDIO	B04E
RESET-FE-MAIN	B02A
RESET-FE-MAIN	B05A
RESET-MAIN-NVM	B04E
RESET-MAIN-NVM	B05E
RESET-MIPS	B04E
RESET-MIPS	B05A
RESET-PNX2015	B04E
RESET-STBY	B04E
RESET-STBY	B05F
RESET-SYSTEM	B01B
RESET-SYSTEM	B04E
RESET-SYSTEM	B05A
RESET-SYSTEM	B07E
RIGHT-SPEAKER	B08A
RIGHT-SPEAKER	B08B
RX0-	B07B
RX0-	B07E
RX0+	B07B
RX0+	B07E
RX1-	B07B
RX1-	B07E
RX1+	B07B
RX1+	B07E
RX2-	B07B
RX2-	B07E
RX2+	B07B
RX2+	B07E
RXC-	B07B
RXC-	B07E
RXC+	B07B
RXC+	B07E
RXD	B01B
RXD	B05E
RXD	B07D
RXD-UP	B04E
RXD-UP	B05E
RXD-VIPER	B05A
RXD-VIPER	B05E
SCL-DMA	B02A
SCL-DMA	B03A
SCL-DMA	B03B
SCL-DMA	B04E
SCL-DMA	B05A
SCL-I2C4	B04G
SCL-I2C4	B05A
SCL-MM	B05A
SCL-MM	B06
SCL-MM	B07B
SCL-MM	B07E
SCL-MOP	B04G
SCL-MOP	B06
SCL-UP-SW	B04E
SCL-UP-VIP	B04E
SCL-UP-VIP	B05A
SCL-UP-VIP	B05E
SC-STANDBY	B03A
SDA-DMA	B02A
SDA-DMA	B03A
SDA-DMA	B03B
SDA-DMA	B04E
SDA-DMA	B05A
SDA-I2C4	B04G
SDA-I2C4	B05A
SDA-MM	B05A
SDA-MM	B06
SDA-MM	B07B
SDA-MM	B07E
SDA-MOP	B04G
SDA-MOP	B06
SDA-UP-SW	B04E
SDA-UP-VIP	B04E
SDA-UP-VIP	B05A
SDA-UP-VIP	B05E
SDM	B04E
SOUND-ENABLE	B05A
SOUND-ENABLE	B08A
SOUND-ENABLE-VPR	B05A
SPDIF-HDMI	B05C
SPDIF-HDMI	B07B
SPDIF-OUT1	B05C
SPDIF-OUT1	B07C
SPI-CLK	B04E
SPI-CSB	B04E
SPI-PROG	B04E
SPI-SDI	B04E
SPI-SDO	B04E
SPI-WP	B04E
STANDBY	B01B
STANDBY	B05F
STBY-WP-NAND-FLASH	B04E
STBY-WP-NAND-FLASH	B05E
STROBE1N-MAIN	B03A
STROBE1N-MAIN	B04A
STROBE1P-MAIN	B03A
STROBE1P-MAIN	B04A
STROBE2N-MAIN	B03A
STROBE2N-MAIN	B04A
STROBE2P-MAIN	B03A
STROBE2P-MAIN	B04A
STROBE3N-MAIN	B03A
STROBE3N-MAIN	B04A
STROBE3P-MAIN	B03A
STROBE3P-MAIN	B04A
SUPPLY-FAULT	B01A
SUPPLY-FAULT	B04E
TEMP-SENSOR	B04E
TUN-VIPER-RX-BUSY	B04C
TUN-VIPER-RX-BUSY	B05C
TUN-VIPER-RX-CLKP	B04C
TUN-VIPER-RX-CLKP	B05C
TUN-VIPER-RX-DATA0	B04C
TUN-VIPER-RX-DATA0	B05C
TUN-VIPER-RX-DATA1	B04C
TUN-VIPER-RX-DATA1	B05C
TUN-VIPER-RX-DATA10	B04C
TUN-VIPER-RX-DATA10	B05C
TUN-VIPER-RX-DATA11	B04C
TUN-VIPER-RX-DATA11	B05C
TUN-VIPER-RX-DATA12	B04C
TUN-VIPER-RX-DATA12	B05C
TUN-VIPER-RX-DATA13	B04C
TUN-VIPER-RX-DATA13	B05C
TUN-VIPER-RX-DATA14	B04C
TUN-VIPER-RX-DATA14	B05C
TUN-VIPER-RX-DATA15	B04C
TUN-VIPER-RX-DATA15	B05C
TUN-VIPER-RX-DATA2	B04C
TUN-VIPER-RX-DATA2	B05C
TUN-VIPER-RX-DATA3	B04C
TUN-VIPER-RX-DATA3	B05C
TUN-VIPER-RX-DATA4	B04C
TUN-VIPER-RX-DATA4	B05C
TUN-VIPER-RX-DATA5	B04C
TUN-VIPER-RX-DATA5	B05C
TUN-VIPER-RX-DATA6	B04C
TUN-VIPER-RX-DATA6	B05C
TUN-VIPER-RX-DATA7	B04C
TUN-VIPER-RX-DATA7	B05C
TUN-VIPER-RX-DATA8	B04C
TUN-VIPER-RX-DATA8	B05C
TUN-VIPER-RX-DATA9	B04C
TUN-VIPER-RX-DATA9	B05C
TUN-VIPER-TX-BUSY	B04C
TUN-VIPER-TX-BUSY	B05C
TUN-VIPER-TX-CLKN	B04C
TUN-VIPER-TX-CLKN	B05C
TUN-VIPER-TX-CLKP	B04C
TUN-VIPER-TX-CLKP	B05C
TUN-VIPER-TX-DATA0	B04C
TUN-VIPER-TX-DATA0	B05C
TUN-VIPER-TX-DATA1	B04C
TUN-VIPER-TX-DATA1	B05C
TUN-VIPER-TX-DATA10	B04C
TUN-VIPER-TX-DATA10	B05C
TUN-VIPER-TX-DATA11	B04C
TUN-VIPER-TX-DATA11	B05C
TUN-VIPER-TX-DATA12	B04C
TUN-VIPER-TX-DATA12	B05C
TUN-VIPER-TX-DATA13	B04C
TUN-VIPER-TX-DATA13	B05C
TUN-VIPER-TX-DATA14	B04C
TUN-VIPER-TX-DATA14	B05C
TUN-VIPER-TX-DATA15	B04C
TUN-VIPER-TX-DATA15	B05C
TUN-VIPER-TX-DATA2	B04C
TUN-VIPER-TX-DATA2	B05C
TUN-VIPER-TX-DATA3	B04C
TUN-VIPER-TX-DATA3	B05C
TUN-VIPER-TX-DATA4	B04C
TUN-VIPER-TX-DATA4	B05C
TUN-VIPER-TX-DATA5	B04C
TUN-VIPER-TX-DATA5	B05C
TUN-VIPER-TX-DATA6	B04C
TUN-VIPER-TX-DATA6	B05C
TUN-VIPER-TX-DATA7	B04C
TUN-VIPER-TX-DATA7	B05C
TUN-VIPER-TX-DATA8	B04C
TUN-VIPER-TX-DATA8	B05C
TUN-VIPER-TX-DATA9	B04C
TUN-VIPER-TX-DATA9	B05C
TXD	B01B
TXD	B05E
TXD	B07D
TXD-UP	B04E
TXD-UP	B05E
TXD-VIPER	B05A
TXD-VIPER	B05E
TXPNXA-	B04B
TXPNXA-	B04G
TXPNXA+	B04B
TXPNXA+	B04G
TXPNXB-	B04B
TXPNXB-	B04G
TXPNXB+	B04B
TXPNXB+	B04G
TXPNXC-	B04B
TXPNXC-	B04G
TXPNXC+	B04B
TXPNXC+	B04G
TXPNXCLK-	B04B
TXPNXCLK-	B04G
TXPNXCLK+	B04B
TXPNXCLK+	B04G
TXPNXD-	B04B
TXPNXD-	B04G
TXPNXD+	B04B
TXPNXD+	B04G
TXPNXE-	B04B
TXPNXE-	B04G
TXPNXE+	B04B
TXPNXE+	B04G
UART-SWITCH	B04E
UART-SWITCH	B05E
UART-SWITCHn	B05E
UP-3V3	B04F
USB1-DM	B05A
USB1-DP	B05A
USB-BUS-PW	B05A
USB-OVERCUR	B05A
U-VOLT-DETECT	B08A
V_SYNC_IN	B03A
VDISP	B04G
VN	B08A
VP	B08A
VREF-AUD	B03B
VREF-AUD	B03E
VREF-AUD-POS	B03B
VREF-AUD-POS	B04A
VREF-DDRPNX	B04D
VREFD-VPRDDR	B05B
VREF-PNX	B04C
VREF-PNX	B05C
VREF-VPRDDR	B05B
V-SYNC-VGA	B07B
Y	B07B
Y	B07C
Y1	B07B
Y1	B07C

3104 313 6173.1

G_16840_071.eps
230107

Layout Small Signal Board (Overview Top Side)

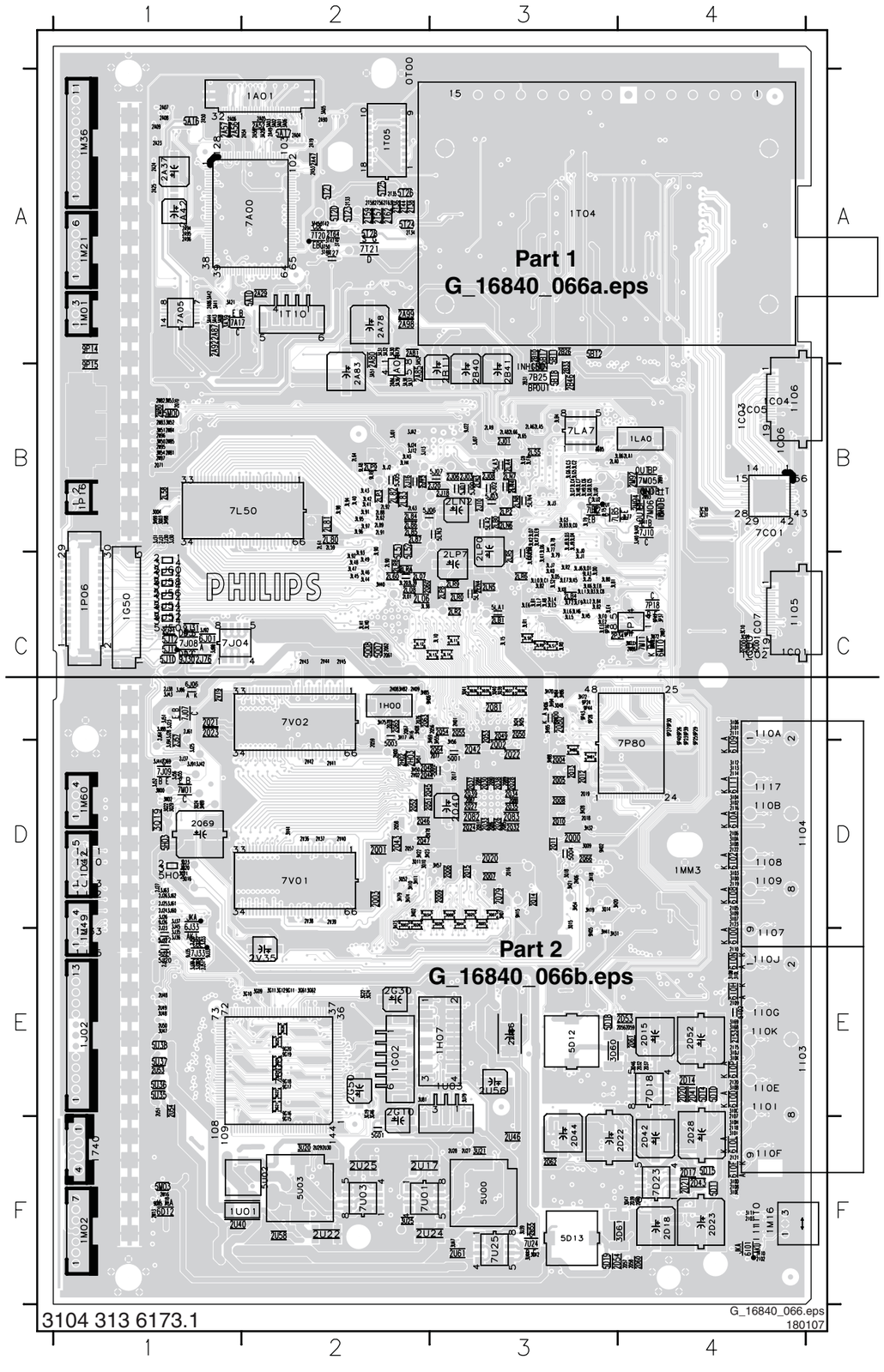

1740	F1	2D57	F4	2LA9	B3	2Q54	C3	3A41	A1	3I69	E4	3LD6	B3	3Q25	D3	5T23	A2	9M09	C4
1A01	A2	2D58	F4	2LB0	B3	2Q55	C3	3A42	A1	3J01	B2	3LD7	B3	3Q26	D2	5T24	A2	9P14	A1
1D42	D1	2D59	E4	2LB1	C3	2Q56	C3	3A43	A1	3J07	B3	3LD8	B3	3Q28	D3	5T25	A2	9P15	B1
1G02	E2	2D60	F4	2LB3	B3	2Q57	D2	3A44	A1	3J12	B2	3LE2	C3	3Q29	D1	5T26	A2	9P16	C3
1G50	C1	2D61	E4	2LB4	C3	2Q58	D2	3A51	B2	3J13	B2	3LE3	C3	3Q34	D2	5T27	A2	9P17	C4
1H00	C2	2D62	F3	2LN2	B2	2Q59	D2	3A52	A2	3J23	C1	3LE4	C3	3Q35	C3	5T28	A2	9P23	D4
1H07	E3	2G10	E2	2LN3	B3	2Q60	C2	3C09	C4	3J25	D1	3LE5	C3	3Q36	C3	5U00	F3	9P24	C3
1I03	E4	2G30	E2	2LN4	C3	2Q61	C2	3C10	C4	3J26	D1	3LE6	C3	3Q37	C3	5U02	F1	9P25	D4
1I04	E4	2G50	E2	2LN5	C3	2Q62	C2	3C30	B4	3J28	C1	3LE7	C3	3Q38	C3	5U03	F2	9P26	C4
1I05	C4	2H00	D2	2LN6	B3	2Q63	C2	3C31	B4	3J30	B1	3LE8	C3	3Q39	C3	5U35	E1	9P27	C4
1I06	B4	2H01	C3	2LN7	B3	2Q64	D3	3D46	E4	3J31	B1	3LE9	B3	3Q40	C3	5U36	E1	9P28	C3
1J02	E1	2H02	D2	2LN8	B3	2Q65	C2	3D47	F4	3J32	E1	3LF0	C3	3Q41	C3	5U37	E1	9P29	C4
1LA0	B4	2H03	D2	2LP0	B3	2Q66	D3	3D60	E3	3J33	E1	3LF2	C3	3Q44	D3	5U38	E1	9P30	C4
1M01	A1	2H06	D3	2LP2	B3	2Q67	C2	3D61	F3	3J35	E1	3LF8	B3	3Q48	C3	6D12	F1	9P39	C4
1M02	F1	2H08	C2	2LP3	B2	2Q69	D1	3G09	E2	3J36	E1	3LF9	C3	3Q52	D2	6H00	C3	9P40	D4
1M16	F4	2H09	C2	2LP4	C2	2Q70	B1	3G10	E2	3J37	D1	3LG3	B3	3T42	A2	6I00	E4	9P42	C4
1M21	A1	2I02	F4	2LP7	C2	2Q71	B1	3G11	E2	3J38	E1	3LG5	B3	3T45	A2	6I01	F4	9P43	C3
1M36	A1	2I03	F4	2LP8	C3	2Q76	C2	3G12	E2	3J39	E1	3LG6	B3	3T46	A2	6I02	D4	9P44	C3
1M49	E1	2I05	D4	2LP9	B2	2Q77	D3	3G19	E2	3J40	B4	3LG7	B3	3T47	A2	6I08	D4		
1M60	D1	2I06	D4	2LR0	C3	2Q78	C2	3G22	E2	3J41	B4	3LG8	B3	3T49	A2	6I09	D4		
1P06	C1	2I07	E4	2LR2	C3	2Q79	D3	3G24	E2	3J42	D1	3LG9	B3	3T50	A2	6I0A	D4		
1P16	B1	2I08	F4	2LR4	B3	2Q80	C3	3G46	E2	3J43	C1	3LH0	C2	3U20	F2	6I0D	E4		
1T04	A2	2I09	E4	2LR5	C3	2Q81	C3	3G61	E2	3J44	D1	3LH1	C2	3U21	F3	6I0F	F4		
1T05	A2	2I10	E4	2LR6	C3	2Q82	D3	3G62	E2	3J45	D1	3LH3	B2	3U25	F2	6I0H	E4		
1T10	A2	2I11	C4	2LR8	C2	2Q83	D3	3H02	D2	3J51	C1	3LH4	B2	3U39	F3	6I0L	F4		
1U01	F1	2I14	D4	2LR9	C3	2Q84	D3	3H06	C3	3J52	D1	3LH5	C3	3U42	F3	6I0N	E4		
1U03	F3	2I15	E4	2LS5	B3	2Q85	D3	3H07	D3	3J55	D1	3LH6	C3	3U44	F3	6I0P	E4		
2A04	A2	2I16	D4	2M13	F1	2Q86	D3	3H08	C2	3J56	D1	3LH8	B3	3U47	E1	6I11	D4		
2A05	A2	2I18	F4	2M16	F1	2Q87	D3	3H10	D2	3J60	D1	3LH9	B3	3U48	E1	6J01	C1		
2A06	A1	2I19	D4	2M18	F1	2Q88	D3	3H11	D2	3J61	D1	3LJ0	B3	3U79	E3	6J06	C1		
2A07	A1	2I20	E4	2M80	B1	2Q89	D3	3H16	C2	3J62	D1	3LJ1	C3	3U81	E2	6J33	E1		
2A08	A1	2I21	F4	2M81	B1	2Q90	D3	3H17	C2	3J63	D1	3LJ2	B2	3UA7	F3	6M10	C4		
2A09	A1	2I22	D4	2M82	B1	2Q91	D3	3H18	D3	3J86	C1	3LJ3	B3	3V44	D2	7A00	A2		
2A19	A2	2I23	D4	2M83	B1	2T33	A2	3H19	D3	3J88	C1	3LJ5	C3	3V78	D2	7A04	B2		
2A23	A1	2I53	E4	2M84	B1	2T34	A2	3H20	D3	3J91	D1	3LJ6	C3	5A10	A2	7A05	A1		
2A24	A1	2J01	B3	2M85	B1	2T35	A2	3H21	D3	3J92	C1	3LJ7	C3	5A16	A1	7A17	A2		
2A25	A1	2J03	B3	2M86	C4	2T36	A2	3H22	D2	3J94	D1	3LJ8	B3	5A17	A2	7B25	B3		
2A29	A2	2J06	B3	2M87	C4	2T38	A2	3H23	D2	3J99	C1	3LJ9	B3	5B11	A3	7C01	B4		
2A37	A1	2J08	B3	2M91	B4	2T44	A2	3H24	C3	3JA2	B2	3LK0	C3	5B12	A3	7D18	E4		
2A42	A1	2J10	B3	2M92	B4	2T56	A2	3H25	C3	3L10	C3	3LK1	C3	5B17	A3	7D23	F4		
2A47	A2	2J13	B2	2M93	B4	2T57	A2	3H28	D3	3L11	C3	3LK2	B3	5B18	B3	7G00	E2		
2A49	A2	2J16	B2	2M94	B4	2T58	A2	3H31	E3	3L12	C2	3LK3	C3	5C00	C4	7J04	C2		
2A50	A1	2J18	B3	2M95	B1	2T59	A2	3H32	D3	3L13	C3	3LK5	C3	5D10	E4	7J07	C1		
2A52	A2	2J20	B3	2M96	B1	2T62	A2	3H40	C2	3L14	C3	3LK6	C3	5D11	F4	7J08	C1		
2A53	A2	2J21	E1	2M97	B1	2T63	A2	3H41	E3	3L15	C3	3LK7	B3	5D12	E3	7J09	D1		
2A54	A2	2J22	E1	2P34	C3	2T64	A2	3H50	D2	3L20	C2	3LK8	C3	5D13	F3	7J10	C4		
2A56	A1	2J23	D1	2Q00	D3	2U17	F2	3H51	D2	3L38	C2	3LL0	C3	5D14	E4	7J33	E1		
2A57	A1	2J24	D1	2Q01	D2	2U22	F2	3H54	D3	3L39	C2	3LL1	C3	5D15	F4	7L50	B1		
2A58	A2	2J25	D1	2Q02	D3	2U24	F3	3H55	D3	3L40	B2	3LL2	C3	5D18	E3	7LA7	B3		
2A78	A2	2J26	D1	2Q03	D2	2U25	F2	3H56	D3	3L41	B2	3LL4	C3	5D19	F3	7LB2	B3		
2A79	A2	2J27	D1	2Q04	D3	2U27	F3	3H57	D3	3L42	B2	3LL5	C3	5G01	F2	7LB5	B3		
2A80	A2	2J30	B1	2Q05	D3	2U28	F3	3H69	C3	3L43	B2	3LL6	C3	5H02	D1	7M01	D1		
2A81	A2	2J31	B1	2Q06	D3	2U29	F2	3H70	C3	3L44	C2	3LL7	C3	5H03	D1	7M05	B4		
2A83	B2	2J37	D1	2Q07	D3	2U30	F2	3H72	C3	3L45	C2	3LR0	C3	5I02	E4	7M06	B4		
2A84	B2	2J38	C1	2Q08	D3	2U40	F1	3H73	D2	3L46	C2	3LR1	C3	5J00	B3	7M11	C4		
2A85	B2	2J50	E1	2Q09	D3	2U46	F3	3H74	D2	3L47	C2	3LR2	C3	5J01	B3	7P14	C4		
2A86	A1	2J51	E1	2Q10	D3	2U48	E1	3H75	C2	3L48	C2	3LR9	C3	5J02	B3	7P18	C4		
2A87	A1	2J57	D1	2Q11	D3	2U49	E1	3H79	D2	3L49	C2	3LS0	C3	5J03	B3	7P80	C4		
2A90	A2	2J61	C1	2Q12	D3	2U50	E1	3H80	D3	3L77	B3	3LS1	C3	5J04	B2	7T20	A2		
2A92	A1	2J64	C1	2Q13	D3	2U51	E1	3H81	D3	3L78	B3	3LS2	C3	5J05	B2	7T21	A2		
2A94	A1	2J69	D1	2Q14	D3	2U53	E1	3H82	C2	3L79	C3	3LT5	B3	5J06	B2	7U01	F2		
2A95	A1	2J71	C1	2Q15	D3	2U54	E1	3H84	C3	3L80	C3	3LT7	B4	5J07	B3	7U03	F2		
2A96	A1	2J76	C1	2Q16	D3	2U55	F3	3H85	C2	3L81	C3	3LT9	B3	5J10	C1	7U24	F3		
2A98	A2	2L01	C2	2Q17	D3	2U56	E3	3H86	C3	3L82	C3	3LU0	B3	5J11	C1	7U25	F3		
2A99	A2	2L06	C2	2Q18	D3	2U58	F2	3H88	D3	3L84	C3	3LU1	B3	5J12	C1	7V01	D1		
2B10	A3	2L07	C2	2Q19	D3	2U61	F3	3H89	D1	3L90	B2	3LU2	B3	5J20	E1	7V02	C2		
2B11	B2	2L08	C2	2Q20	D3	2U86	E3	3H94	C3	3L91	B2	3M00	D1	5J21	E1	9D05	F1		
2B26	A3	2L58	B1	2Q21	C1	2V02	D2	3H95	C3	3L92	C2	3M02	D1	5J22	E1	9G11	E2		
2B31	B3	2L59	B2	2Q22	D3	2V19	C1	3H98	B1	3L93	C2	3M50	B1	5J50	C1	9G15	F2		
2B33	B3	2L60	C2	2Q23	C1	2V35	E2	3H99	B1	3L94	B2	3M51	B1	5J52	C1	9G16	E2		
2B40	B3	2L61	B2	2Q24	D3	2V36	D2	3I00	D4	3L95	B2	3M52	B1	5J54	C1	9G17	E2		
2B41	B3	2L62	B2	2Q26	D3	2V37	D2	3I01	C4	3L96	B2	3M53	B1	5J56	C1	9G18	E2		
2B46	B3	2L63	B2	2Q27	D3	2V38	D2	3I02	D4	3L97	B2	3M54	B1	5J58	C1	9G19	E2		
2C00	C4	2L64	B2	2Q28	D3	2V39	D2	3I03	D4	3L98	B2	3M71	C4	5J60	C1	9G20	E2		
2D14	E4	2L65	B3	2Q30	D3	2V40	D2	3I04	D4	3LA8	C3	3M72	C4	5L50	C2	9G21	E2		
2D15	E4	2L66	B3	2Q32	D3	2V41	D2	3I06	C4	3LB1	C3	3P37	C4	5L51	B2	9G22	E2		
2D17	F4	2L80	B2	2Q33	D3	2V42	D2	3I07	D4	3LB2	C3	3Q02	D2	5L52	B2	9G23	E2		
2D18	F4	2L81	B2	2Q34	D3	2V43	C2	3I08	D4	3LB3	C3	3Q03	B1	5LA1	C3	9G24	E2		
2D20	E4	2L82	B2	2Q35	D3	2V44	C2	3I09	D4	3LB4	B3	3Q04	B1	5LA2	B3	9G25	E2		
2D21	F4	2L83	B2	2Q37	D3	2V45	C2	3I0A	D4	3LB5	B3	3Q05	D3	5LA3	B3	9G26	E2		
2D22	E3	2L84	B2	2Q38	D3	3A01	A2	3I0B	E4	3LB6	B4	3Q07	D3	5LN0	C3	9H02	D3		
2D23	F4	2L85	B2	2Q39	D3	3A02	A2	3I0C	E4	3LC0	B3	3Q08	D3	5LN1	B3	9H05	E3		
2D28	E4	2L86	B2	2Q40	D3	3A03	A2	3I0D	F4	3LC1	C3	3Q09	D3	5LN2	C3	9H06	C2		
2D32	E4	2L87	B2	2Q42	D3	3A05	A2	3I0E	F4	3LC2	B3	3Q10	D2	5LN3	B3	9H15	D3		
2D37	E4	2L88	B2	2Q43	D2	3A06	A2	3I0H	F4	3LC3	B3	3Q11	D2	5LN4	B3	9J22	B3		
2D39	F4	2L89	B2	2Q44	D2	3A08	A1	3I0I	F4	3LC4	B3	3Q14	D3	5M00	B1	9J24	B2		
2D40	F4	2L90	C2	2Q45	D2	3A20	A2	3I0J	E4	3LC5	B3	3Q15	D3	5M03	F1	9J26	D1		
2D41	E4	2L91	B2	2Q46	D2	3A21	A1	3I0K	E4	3LC6	B3	3Q16	D1	5Q01	D3	9J30	C1		
2D42	E4	2L92	B2	2Q47	D2	3A30	A2	3I0L	E4	3LC7	B3	3Q18	D3	5Q02	D3	9J31	C1		
2D43	F4	2LA0	B3	2Q48	D2	3A31	A2	3I0M	E4	3LC8	C3	3Q19	D1	5Q03	D2	9J33	E1		
2D44	F3	2LA1	B4	2Q49	C3	3A32	A2	3I10	F4	3LD0	C3	3Q20	D1	5Q04	D3	9J35	E1		
2D52	E4	2LA4	B3	2Q50	C3	3A36	B2	3I11	F4	3LD1	C3	3Q21	D1	5Q07	C2	9J40	B4		
2D53	E4	2LA5	B3	2Q51	D2	3A37	B2	3I12	D4	3LD3	B3	3Q22	D1	5Q08	C2	9LA3	C3		
2D54	F3	2LA6	B3	2Q52	D2	3A38	B2	3I13	D4	3LD4	B3	3Q23	D1	5T20	A2	9LA8	B2		
2D56	E4	2LA8	B3	2Q53	C3	3A39	A1	3I68	E4	3LD5	C3	3Q24	D1	5T21	A2	9LA9	B2		

Layout Small Signal Board (Part 1 Top Side)

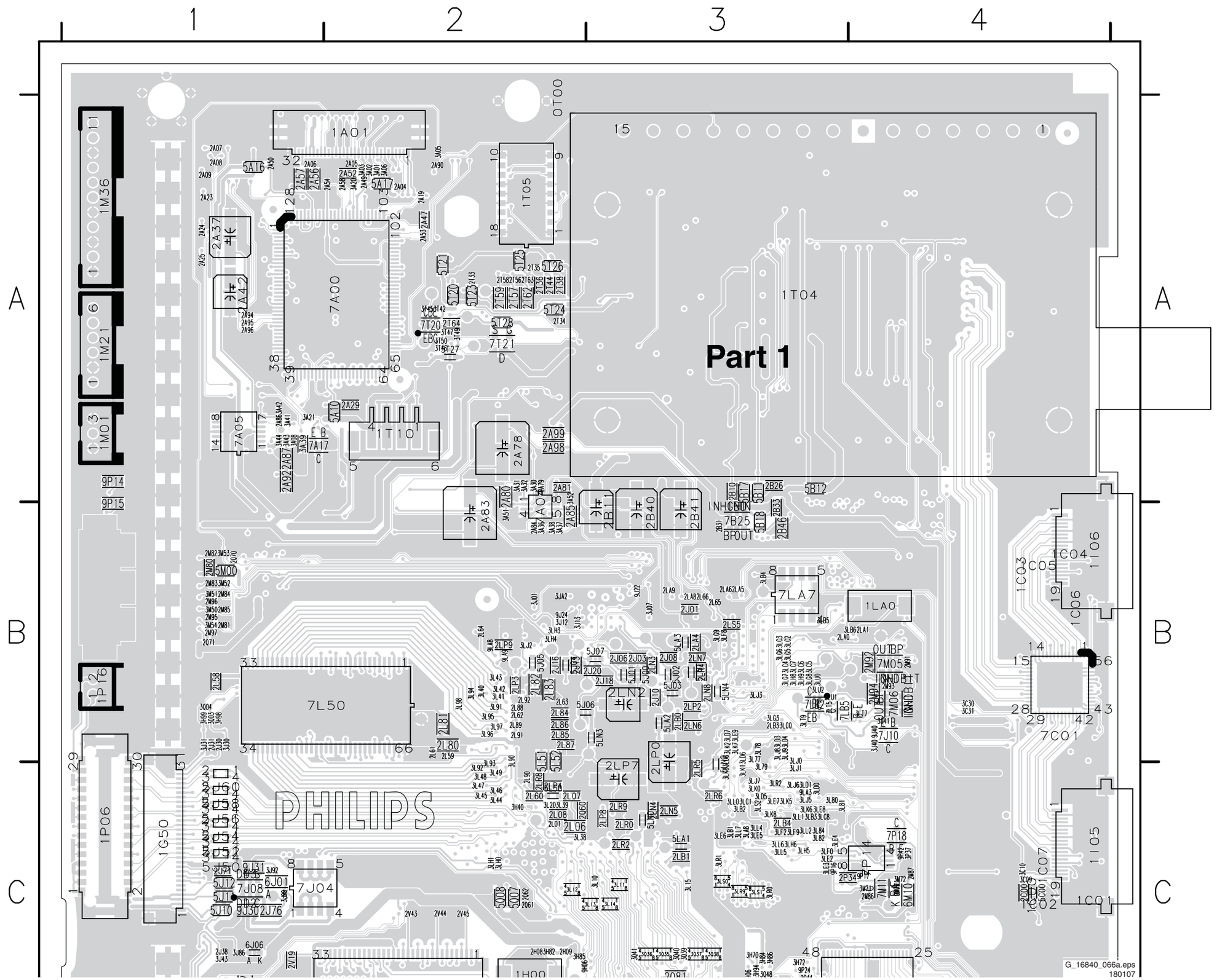

Layout Small Signal Board (Part 2 Top Side)

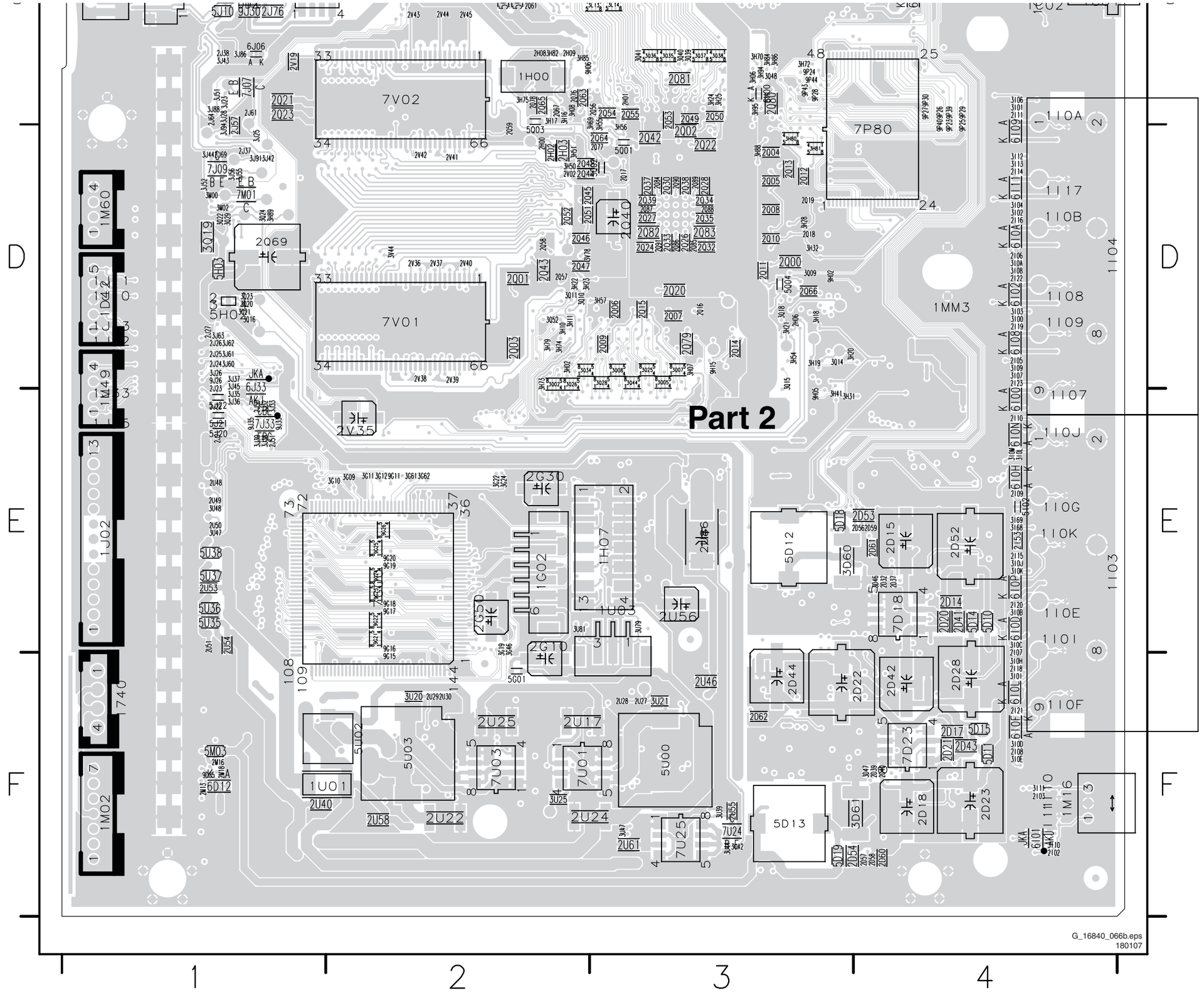

Layout Small Signal Board (Overview Bottom Side)

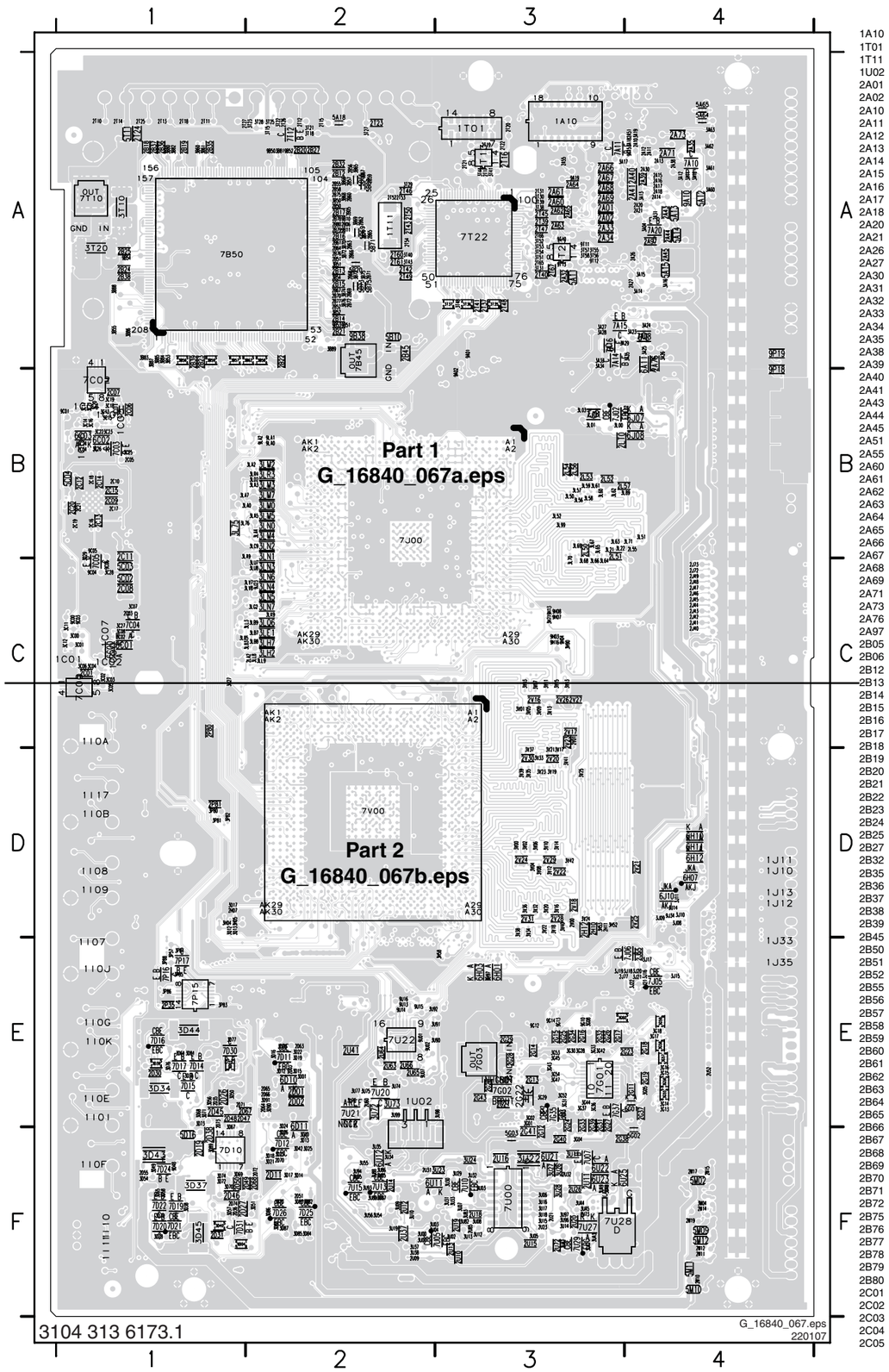

1A10	A3	2C06	B1	2LT0	B3	3A18	A4	3D44	E1	3L62	B3	3U03	F2	5A12	A4	7U15	F2
1T01	A3	2C07	B1	2M10	F4	3A19	A4	3D45	F1	3L63	B3	3U04	F2	5A13	A4	7U20	E2
1T11	A2	2C08	C1	2M11	F4	3A23	A4	3D49	F1	3L64	C3	3U05	F3	5A14	A4	7U21	E2
1U02	E2	2C09	B1	2M12	F4	3A24	A4	3D50	E1	3L65	B3	3U06	F3	5A15	A4	7U22	E2
2A01	A3	2C10	B1	2M14	F4	3A25	A4	3D51	F2	3L66	C3	3U07	F3	5A18	A2	7U27	F3
2A02	A3	2C11	B1	2M15	F4	3A26	A4	3D54	F1	3L67	B3	3U08	F3	5A64	A4	7U28	F4
2A10	A4	2C12	B1	2M17	F4	3A27	A3	3D56	E1	3L68	C3	3U09	F2	5A65	A4	7U29	F3
2A11	A4	2C13	B1	2M19	F4	3A28	A3	3D57	F1	3L69	B3	3U10	F2	5B10	A2	7V00	D2
2A12	A4	2C14	B1	2P35	E1	3A29	A3	3D58	F1	3L70	C3	3U11	F3	5B20	A2	9A01	A3
2A13	A4	2C15	B1	2P80	C1	3A33	A3	3D64	E1	3L71	B4	3U12	F3	5B65	A2	9A02	B3
2A14	A4	2C16	B1	2P81	D1	3A34	A3	3D65	F1	3L75	B1	3U13	F3	5B67	A2	9A10	A4
2A15	A4	2C17	B1	2T10	A1	3A35	A4	3D67	E1	3L76	B1	3U14	F3	5B69	A2	9A15	A4
2A16	A4	2C18	B1	2T11	A1	3A60	A4	3D68	E1	3L83	C2	3U15	F3	5B71	A2	9A19	A3
2A17	A4	2C19	B1	2T12	A2	3A61	A4	3D69	F1	3L85	C1	3U16	F3	5B73	A2	9B10	A2
2A18	A4	2C20	B1	2T13	A1	3A62	A4	3D70	F1	3L89	B4	3U17	F3	5B75	A2	9B11	A2
2A20	A4	2C21	B1	2T14	A1	3A63	A4	3D71	E1	3L99	B3	3U18	F3	5C01	B1	9B38	A2
2A21	A4	2D01	E2	2T15	A2	3B50	A2	3D72	F1	3LA0	B2	3U19	F2	5C02	C1	9B50	A2
2A26	A4	2D02	E2	2T16	A3	3B51	A2	3D73	E1	3LA2	B2	3U22	F3	5C03	C1	9B51	A2
2A27	A4	2D03	E2	2T17	A3	3B52	A2	3D74	F1	3LA3	B2	3U23	F3	5C04	B1	9B52	A2
2A30	A4	2D11	F2	2T18	A1	3B53	A1	3D75	F2	3LA4	B2	3U24	F3	5D16	F1	9B53	A2
2A31	A4	2D19	F1	2T19	A3	3B54	A2	3D76	E1	3LA5	B2	3U26	F3	5G02	F4	9B54	A1
2A32	A3	2D26	E1	2T20	A3	3B55	A1	3D77	E1	3LA7	B1	3U27	F3	5G03	F3	9C00	C1
2A33	A3	2D27	F1	2T21	A3	3B56	A1	3D78	F1	3LA9	B2	3U28	F3	5M02	F4	9C01	B1
2A34	A3	2D30	E1	2T22	A3	3B57	A1	3D79	F1	3LB7	C2	3U29	F3	5M09	F4	9C03	C1
2A35	A4	2D31	F1	2T23	A2	3B58	A2	3D81	E1	3LB8	C2	3U30	F3	5M10	F4	9C04	C1
2A38	A4	2D35	E1	2T24	A1	3B59	A1	3D82	F2	3LB9	C2	3U31	F3	5M11	F4	9C05	B1
2A39	A4	2D36	F1	2T25	A1	3B60	A1	3D83	F2	3LC9	B2	3U32	F3	5M12	F4	9C06	C1
2A40	A4	2D38	F1	2T26	A2	3B61	A1	3D84	F2	3LD2	B2	3U33	F3	5T11	A1	9D03	E1
2A41	A4	2D45	E1	2T27	A1	3B62	A2	3D85	F2	3LE1	C2	3U34	F2	6A11	A4	9D04	F1
2A43	A4	2D46	F1	2T30	A3	3B65	A2	3D86	F2	3LG2	C2	3U35	F2	6C00	C1	9D48	F1
2A44	A4	2D47	E1	2T31	A3	3B66	A2	3D87	F2	3LH2	C2	3U37	F2	6C01	C1	9G10	E3
2A45	A4	2D48	E1	2T37	A3	3B67	A2	3D88	F2	3LH7	C2	3U38	F2	6C02	B1	9G12	E3
2A51	A4	2D49	F2	2T39	A3	3B68	A2	3D89	F1	3LK9	C2	3U54	F2	6C03	B1	9G13	E3
2A55	A3	2D50	F1	2T40	A3	3B69	A2	3D90	E2	3LL3	C2	3U55	F2	6D10	E2	9G14	E3
2A60	A3	2D51	F2	2T41	A3	3B70	A2	3D91	E2	3LL8	C2	3U56	F2	6D11	E2	9H03	C3
2A61	A3	2D55	F1	2T42	A2	3B71	A2	3G01	E3	3LL9	C2	3U72	E2	6G01	E4	9H04	C3
2A62	A3	2D63	E2	2T43	A2	3B72	A2	3G02	E3	3LM0	B2	3U73	E2	6H01	E3	9H07	C3
2A63	A3	2D64	E2	2T45	A3	3B73	A2	3G03	E3	3LM2	B2	3U74	E2	6H03	E3	9H08	C3
2A64	A3	2D65	E2	2T46	A2	3B74	A2	3G04	F3	3LM3	B2	3U75	E2	6H07	D4	9H13	C3
2A65	A3	2D66	E2	2T47	A3	3B75	A2	3G05	E4	3LM4	B2	3U76	E2	6H10	D4	9H16	C3
2A66	A3	2D67	E1	2T48	A3	3B76	A2	3G08	E3	3LM5	B2	3U77	E2	6H11	D4	9J21	E4
2A67	A3	2D68	F2	2T49	A2	3B80	A1	3G13	E4	3LM7	B2	3U82	F3	6H12	D4	9J23	C2
2A68	A3	2D70	F2	2T50	A2	3B81	A2	3G14	E4	3LN0	B2	3U83	F3	6J07	B4	9J34	D4
2A69	A3	2D71	E1	2T52	A2	3B82	A1	3G15	E4	3LN1	B2	3U85	F2	6J08	B4	9LA0	B2
2A71	A4	2D72	F2	2T53	A2	3B83	A1	3G16	E4	3LN2	B2	3U86	F2	6J10	D4	9LA1	B2
2A73	A4	2D73	E1	2T54	A2	3B84	A1	3G17	E4	3LN3	C2	3U87	F2	6U11	F2	9LA2	B2
2A76	A4	2D74	F1	2T60	A2	3B85	A1	3G18	E4	3LN4	C2	3U88	F2	6U12	F2	9P18	B4
2A97	A4	2G11	E4	2T61	A2	3B86	A1	3G28	E3	3LN5	C2	3U89	F2	6U21	F3	9P19	A4
2B05	A2	2G12	F3	2T65	A3	3B87	A1	3G29	E3	3LN6	C2	3U90	E3	6U22	F3	9T10	A3
2B06	A2	2G13	E3	2T66	A3	3B88	A1	3G30	E3	3LN7	C2	3U91	E3	6U23	F3	9T11	A3
2B12	A2	2G14	E3	2T67	A3	3B89	A2	3G31	E3	3LQ6	C2	3U92	E2	6U25	F4	9T12	A3
2B13	A2	2G15	E3	2U09	F2	3C00	C1	3G33	E3	3LR3	B2	3U93	F2	7A08	A4	9T13	A3
2B14	A2	2G16	E3	2U10	F3	3C01	C1	3G36	E3	3LR4	B2	3U94	F2	7A10	A4	9U01	E2
2B15	A2	2G17	E3	2U11	F3	3C02	C1	3G37	E3	3LU7	C2	3U95	F2	7A11	A3	9U02	E2
2B16	A2	2G18	E4	2U12	F2	3C03	C1	3G42	E3	3LU8	C2	3U96	F3	7A14	A3	9U03	F3
2B17	A2	2G19	E4	2U13	F3	3C04	C1	3G43	E3	3LV7	C2	3U97	F3	7A15	A3	9U07	E2
2B18	A1	2G20	E3	2U14	F2	3C05	C1	3G44	E3	3LV8	C2	3U98	E3	7A16	A3	9U13	E2
2B19	A1	2G21	E3	2U15	F3	3C06	C1	3G45	E3	3M04	F4	3U99	E2	7A20	A4	9U14	E2
2B20	A2	2G22	E3	2U16	F3	3C07	C1	3G47	E3	3P57	E1	3UA1	F3	7B45	A2	9U15	E2
2B21	A2	2G23	E4	2U18	F3	3C08	C1	3G52	E3	3P80	D1	3UA2	F3	7B50	A1	9U16	E2
2B22	A2	2G24	E3	2U19	F3	3C11	C1	3G53	E3	3P81	D1	3UA3	F3	7C00	C1		
2B23	A1	2G25	E3	2U20	F3	3C12	C1	3G54	E3	3P82	D1	3UA4	F3	7C02	A1		
2B24	A1	2G26	E3	2U21	F3	3C13	B1	3G55	E4	3P83	E1	3UA5	F3	7C03	B1		
2B25	A1	2G27	E3	2U23	F3	3C14	B1	3G56	E4	3P84	E1	3UA8	F3	7C04	C1		
2B27	A2	2G28	E3	2U26	F3	3C15	B1	3G57	E4	3P85	E1	3UA9	F3	7C05	B1		
2B32	A2	2G29	E3	2U31	F2	3C16	B1	3G58	E4	3P86	E1	3V00	D3	7D10	F2		
2B35	A1	2G31	E3	2U32	F3	3C17	B1	3G59	E4	3P88	E1	3V01	C3	7D11	E2		
2B36	A1	2G32	E3	2U37	F2	3C18	B1	3G60	E3	3Q12	D1	3V02	D3	7D12	F2		
2B37	A1	2G33	E3	2U41	E2	3C19	B1	3H04	D1	3Q13	D1	3V03	C3	7D14	E1		
2B38	A1	2G34	E3	2U52	E4	3C20	B1	3H05	D1	3Q17	D1	3V04	D3	7D15	E1		
2B39	A1	2G37	E4	2U60	E2	3C21	B1	3H52	D3	3Q27	C1	3V05	C3	7D16	E1		
2B45	A2	2G38	F3	2U63	E2	3C22	B1	3H53	D3	3T10	A1	3V06	D3	7D17	E1		
2B50	A2	2G39	E3	2U64	E2	3C23	B1	3H58	E3	3T15	A2	3V07	C3	7D19	F1		
2B51	A2	2G40	F3	2U65	E2	3C24	B1	3H71	C3	3T18	A2	3V08	D3	7D20	F1		
2B52	A2	2G41	F3	2U66	E2	3C25	B1	3H90	C3	3T20	A1	3V09	C3	7D21	F1		
2B55	A2	2G42	E3	2U72	F3	3C26	B1	3H97	E3	3T21	A2	3V10	D3	7D22	F1		
2B56	A2	2G43	E3	2U73	F3	3C27	C1	3J08	D4	3T22	A2	3V11	C3	7D24	F1		
2B57	A2	2H07	D1	2U85	F3	3C28	C1	3J09	D4	3T23	A2	3V12	D3	7D25	F2		
2B58	A2	2H10	D3	2V00	D3	3C29	B1	3J10	D4	3T25	A2	3V13	C3	7D26	F2		
2B59	A2	2H11	D3	2V01	C3	3D01	E2	3J11	D4	3T27	A2	3V14	D3	7D30	E2		
2B60	A2	2H12	D3	2V16	C3	3D10	F2	3J14	D4	3T28	A2	3V15	C3	7D31	F2		
2B61	A2	2J40	C4	2V17	C3	3D12	E2	3J15	E4	3T29	A2	3V16	D3	7G01	E3		
2B62	A2	2J41	C4	2V18	D3	3D13	F2	3J16	E4	3T31	A3	3V17	D3	7G02	E3		
2B63	A2	2J42	C4	2V20	D3	3D14	F2	3J17	E4	3T35	A3	3V18	D3	7G03	E3		
2B64	A2	2J43	C4	2V21	D4	3D15	E2	3J18	E4	3T36	A3	3V19	D3	7G35	E3		
2B65	A2	2J44	C4	2V22	D3	3D16	E2	3J19	E3	3T37	A3	3V20	D3	7G37	E4		
2B66	A2	2J45	C4	2V23	C3	3D17	F2	3J20	E4	3T38	A3	3V21	D3	7J00	C2		
2B67	A2	2J46	C4	2V24	D3	3D18	F2	3J21	E4	3T39	A3	3V22	D3	7J01	B3		
2B68	A2	2J47	C4	2V25	D4	3D19	E2	3J22	E4	3T40	A2	3V23	D3	7J02	B3		
2B69	A2	2J48	C4	2V26	C3	3D20	E2	3L00	B3	3T41	A3	3V24	D3	7J05	E4		
2B70	A2	2J49	C4	2V27	C3	3D21	F2	3L01	B3	3T43	A2	3V25	D3	7J06	E3		
2B71	A2	2J55	E4	2V28	D3	3D22	E2	3L02	B4	3T44	A3	3V32	D3	7P15	E1		
2B72	A2	2J72	C4	2V29	D3	3D23	F2	3L03	B3	3T48	A3	3V33	D3	7P16	E1		
2B75	A2	2J73	C4	2V30	D3	3D24	E2	3L21	B3	3T51	A3	3V34	D3	7P17	E1		
2B76	A2	2J77	E3	2V31	D3	3D25	F2	3L22	B3	3T52	A3	3V35	D3	7T10	A1		
2B77	A2	2L50	B3	3A04	A4	3D26	F2	3L50	B3	3T53	A3	3V36	D3	7T12	A2		
2B78	A2	2L51	B3	3A10	A4	3D34	E1	3L51	B4	3T54	A3	3V37	D3	7T13	A3		
2B79	A2	2L52	B3	3A11	A4	3D35	E1	3L52	B3	3T55	A3	3V38	D3	7T22	A3		
2B80	A2	2L53	B3	3A12	A4	3D37	F1	3L56	B3	3T56	A3	3V39	D3	7T23	A3		
2C01	C1	2L54	B3	3A13	A4	3D38	F1	3L57	B3	3T57	A3	3V40	D3	7U00	F3		
2C02	C1	2L55	B4	3A14	A4	3D39	E1	3L58	B3	3T58	A3	3V41	D3	7U05	F3		
2C03	C1	2L56	B3	3A15	A4	3D40	F1	3L59	B3	3U00	F2	3V42	D3	7U07	F3		
2C04	B1	2L57	B3	3A16	A4	3D42	F2	3L60	B3	3U01	F2	3V43	C3	7U10	F3		
2C05	B1	2LA2	C2	3A17	A3	3D43	F1	3L61	B3	3U02	F3	5A11	A3	7U13	F2		

Layout Small Signal Board (Part 1 Bottom Side)

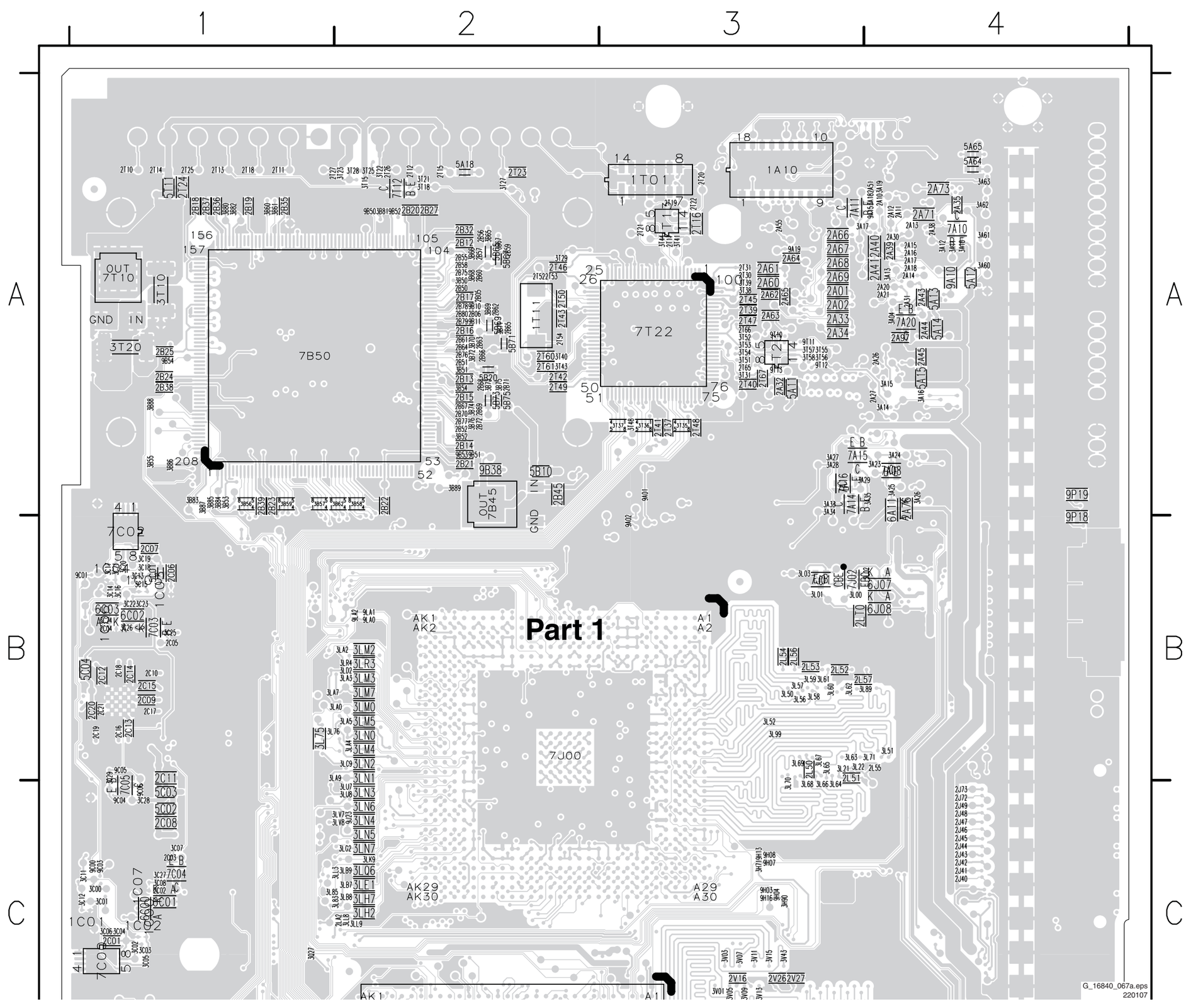

Layout Small Signal Board (Part 2 Bottom Side)

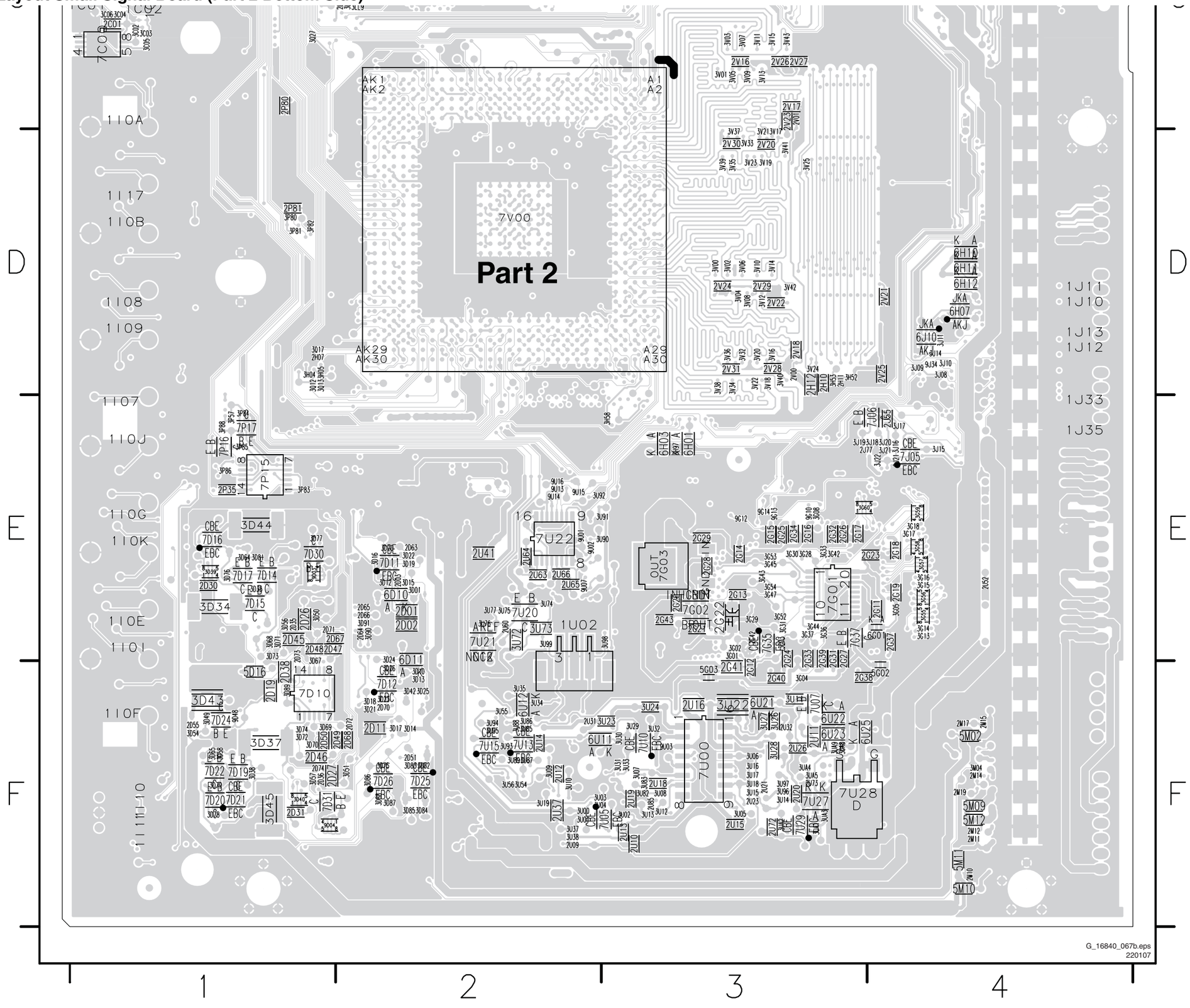
Part 2
7V00
AK1
AK2
A1
A2
AK29
AK30
A29
A30
1I0A
1I17
1I0B
1I08
1I09
1I07
1I0J
1I0G
1I0K
1I0E
1I0I
1I0F
1I1I1I10
1J11
1J10
1J13
1J12
1J33
1J35
7U22
7U20
1U02
7U00
7U28
7G03
7G01
7G02
7P17
7P15
7D16
7D17
7D14
7D30
7D15
7D10
7D11
7D12
7D26
7D25
7D24
7D22
7D19
7D20
7D21
7D31
7U05
7U15
7U13
7U10
7U29
7U27
7J06
7J05
6H03
6H01
6H10
6H11
6H12
6H07
6J10
6U12
6U21
6U22
6U23
6U25
6U11
5M02
5M09
5M12
5M11
5M10
3D44
3D34
3D43
3D37
3D45
2P80
2P81
2P35
2U41
2U16
2U11
2U26
2U15
2U10
2U37
2U19
2U18
2U13
2V16
2V26
2V27
2V17
2V23
2V01
2V30
2V20
2V24
2V29
2V22
2V31
2V28
2V25
2V21
2H12
2H10
2G29
2G14
2G13
2G43
2G22
2G40
2G41
2G12
2G38
2G37
2G19
2G18
2G23
2G17
2G16
2G15
2G34
2G26
2G32
2D63
2D64
2D65
2D66
2D01
2D02
2D67
2D47
2D48
2D46
2D45
2D38
2D19
2D56
2D43
2D68
2D72
2D51
2D52
2D55
2D54
2D70
2D71
2D27
2D31
2D30
2D35
2D36
2D37
2D39
2D40
2D41
2D42
2D44
2D45
2D46
2D47
2D48
2D49
2D50
2D51
2D52
2D53
2D54
2D55
2D56
2D57
2D58
2D59
2D60
2D61
2D62
2D63
2D64
2D65
2D66
2D67
2D68
2D69
2D70
2D71
2D72
3V00
3V01
3V02
3V03
3V04
3V05
3V06
3V07
3V08
3V09
3V10
3V11
3V12
3V13
3V14
3V15
3V16
3V17
3V18
3V19
3V20
3V21
3V22
3V23
3V24
3V25
3V26
3V27
3V28
3V29
3V30
3V31
3V32
3V33
3V34
3V35
3V36
3V37
3V38
3V39

Side A/V Panel

SIDE FACING SIDE AV

1301 YKF51-5564
SVHS
Y_CVBS
C
I303
3303 10R
3304 100R
4304
S302
S301
2303 22p
3302 75R
2301 47p
2302 47p
6301 DF3A6.8
6302 DF3A6.8
3301 75R
3305 10R
3306 100R
4306
2304 47p
3307 100R
4307
YELLOW
CVBS
1302-1 1
I306
S303
2311 22p
6303 DF3A6.8
WHITE
L
1302-2 4
I308
4301
4302
S304
3308 **
2313 **
3314 **
3309 **
2305 **
6304 DF3A6.8
RED
R
1302-3 7
I309
S305
3310 **
2314 **
3315 **
3311 **
2306 **
6305 DF3A6.8
1303
HEADPHONE
YKB21-5101A
I311
I312
4308
4309
S306
S307
S308
2307 22n
2308 22n
2309 10n
2310 10n
3312 10K
3313 10K
6306 DF3A6.8
6307 DF3A6.8

TO 1M36 OF BJ/EBJ SSB B

I314 FRONT_Y_CVBS_IN
I315 FRONT_C_IN
I316 L_FRONT_IN
I317 FRONT_DETECT
I318 R_FRONT_IN
I319 HEAD_PH_L
I320 HEAD_PH_R
I321
1304

1310
B3B-PH-K

TO 1H01 OF BJ SSB / TO 1M60 OF EBJ SSB B

1309
B5B-PH-K
I330
I331
I332
5300 220R
4310
4311
2312 100u 16V
I325
I326
I327
I328
1308
292303-4
USB
S310
S311
S312
4303

** **DIVERSITY TABLE**

	EBJ 2K7	BJ 2K7	LC07
2305	100p	100p	1n
2306	100p	100p	1n
2313	NA	680p	1n
2314	NA	680p	1n
3314	NA	33K	NA
3315	NA	33K	NA
3308	100R	1K	150R
3310	100R	1K	150R
3309	100K	NA	33K
3311	100K	NA	33K

G_16850_023.eps
110107

3139 123 6229.1

1301 A1 S307 F2
1302-1 C1 S308 F2
1302-2 D1 S310 E8
1302-3 E1 S311 E8
1303 E1 S312 E8
1304 B9
1308 D9
1309 D7
1310 D9
2301 A4
2302 A4
2303 A2
2304 B4
2305 D4
2306 E4
2307 F4
2308 F4
2309 F4
2310 F4
2311 C2
2312 D8
2313 D3
2314 E3
3301 B2
3302 A4
3303 A4
3304 A5
3305 B4
3306 B5
3307 C5
3308 D4
3309 D4
3310 E4
3311 E4
3312 F5
3313 F5
3314 D4
3315 E4
4301 D2
4302 D2
4303 E8
4304 A5
4306 B5
4307 C5
4308 F4
4309 F4
4310 E7
4311 E7
5300 D7
6301 B3
6302 B3
6303 C3
6304 D3
6305 E3
6306 F3
6307 F3
I303 A3
I306 C2
I308 D2
I309 E2
I311 F2
I312 F2
I314 B7
I315 B7
I316 B7
I317 B7
I318 C7
I319 C7
I320 C7
I321 B9
I325 D8
I326 D8
I327 E8
I328 E8
I330 D7
I331 D7
I332 E7
S301 A2
S302 A2
S303 C2
S304 D2
S305 E2
S306 F2

Layout Side A/V Panel (Top Side)

1301 A1 1302 A2 1303 A3 1304 A2 1308 A4 1309 A3 1310 A3

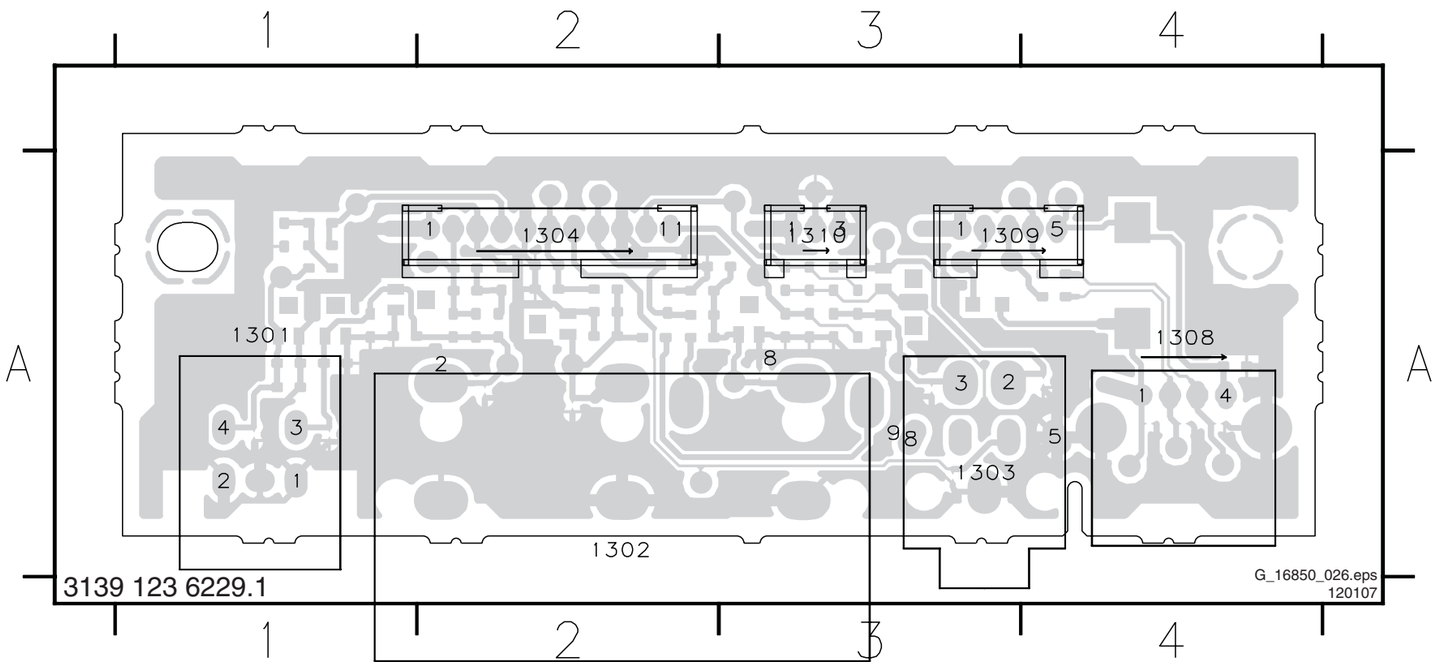

Layout Side A/V Panel (Bottom Side)

2301	A4	2307	A2	2313	A3	3305	A3	3311	A3	4302	A3	4309	A2	6303	A4
2302	A4	2308	A2	2314	A3	3306	A3	3312	A2	4303	A1	4310	A1	6304	A3
2303	A4	2309	A2	3301	A4	3307	A3	3313	A2	4304	A4	4311	A1	6305	A2
2304	A3	2310	A2	3302	A4	3308	A3	3314	A3	4306	A3	5300	A2	6306	A2
2305	A3	2311	A4	3303	A4	3309	A3	3315	A3	4307	A3	6301	A4	6307	A2
2306	A3	2312	A1	3304	A4	3310	A3	4301	A3	4308	A2	6302	A4		

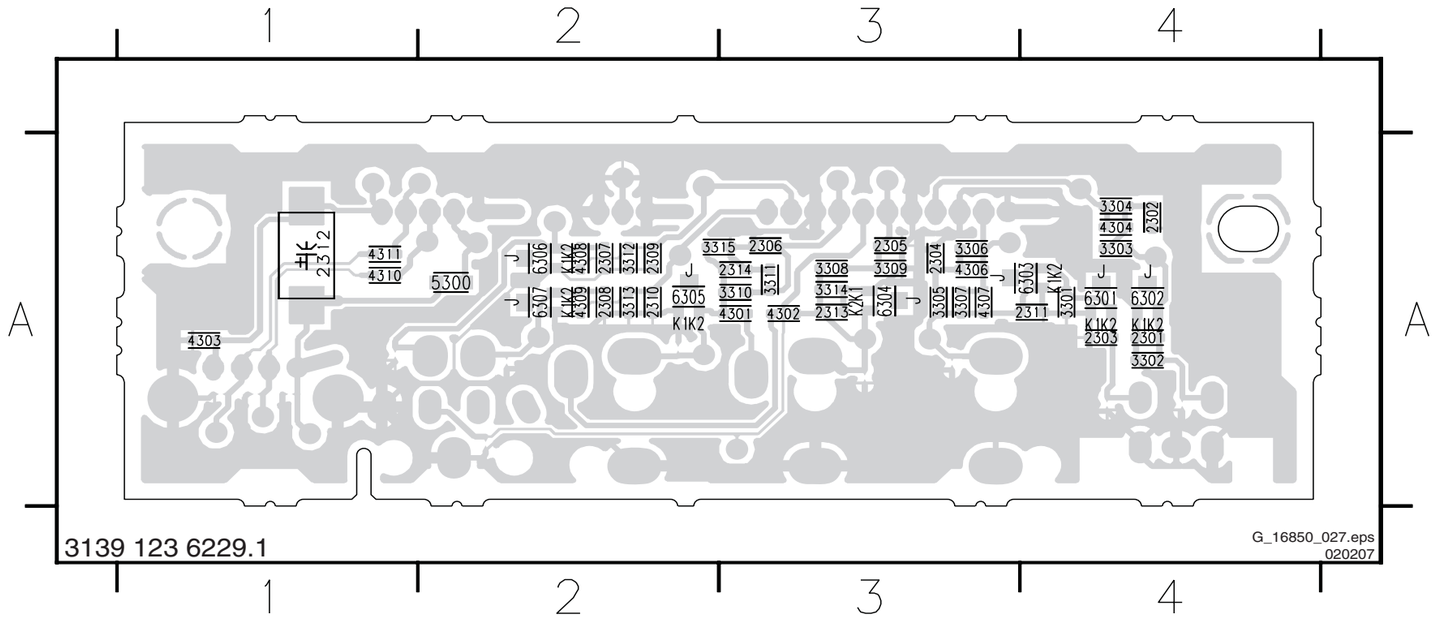

Keyboard Control Panel

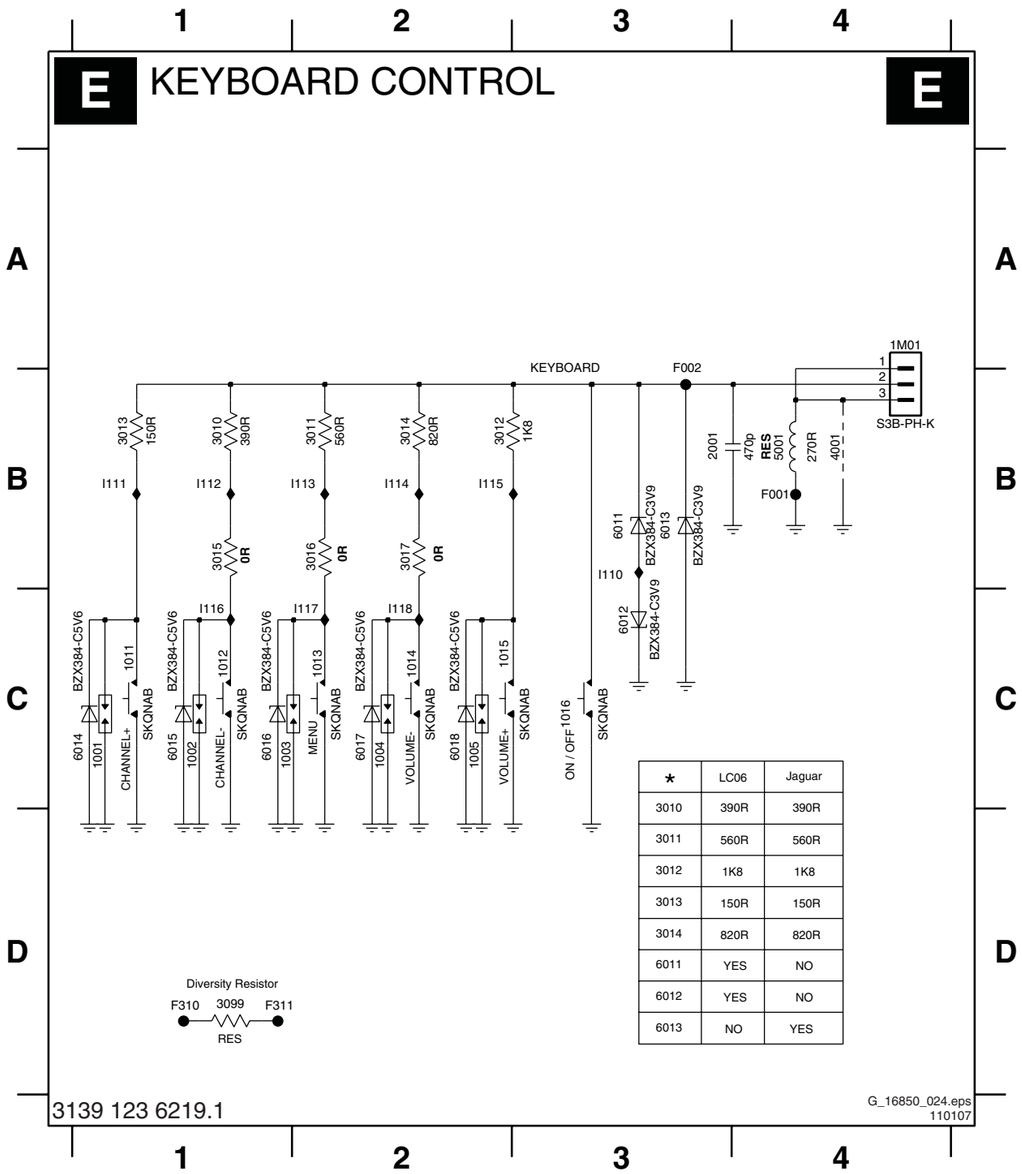

*	LC06	Jaguar
3010	390R	390R
3011	560R	560R
3012	1K8	1K8
3013	150R	150R
3014	820R	820R
6011	YES	NO
6012	YES	NO
6013	NO	YES

1001 C1
1002 C1
1003 C1
1004 C2
1005 C2
1011 C1
1012 C1
1013 C2
1014 C2
1015 C2
1016 C3
1M01 A4
2001 B3
3010 B1
3011 B2
3012 B2
3013 B1
3014 B2
3015 B1
3016 B2
3017 B2
3099 D1
4001 B4
5001 B4
6011 B3
6012 C3
6013 B3
6014 C1
6015 C1
6016 C1
6017 C2
6018 C2
F001 B4
F002 B3
F310 D1
F311 D1
I110 B3
I111 B1
I112 B1
I113 B2
I114 B2
I115 B2
I116 C1
I117 C2
I118 C2

Personal Notes:

E_06532_012.eps
131004

Layout Keyboard Control Panel (Top Side)

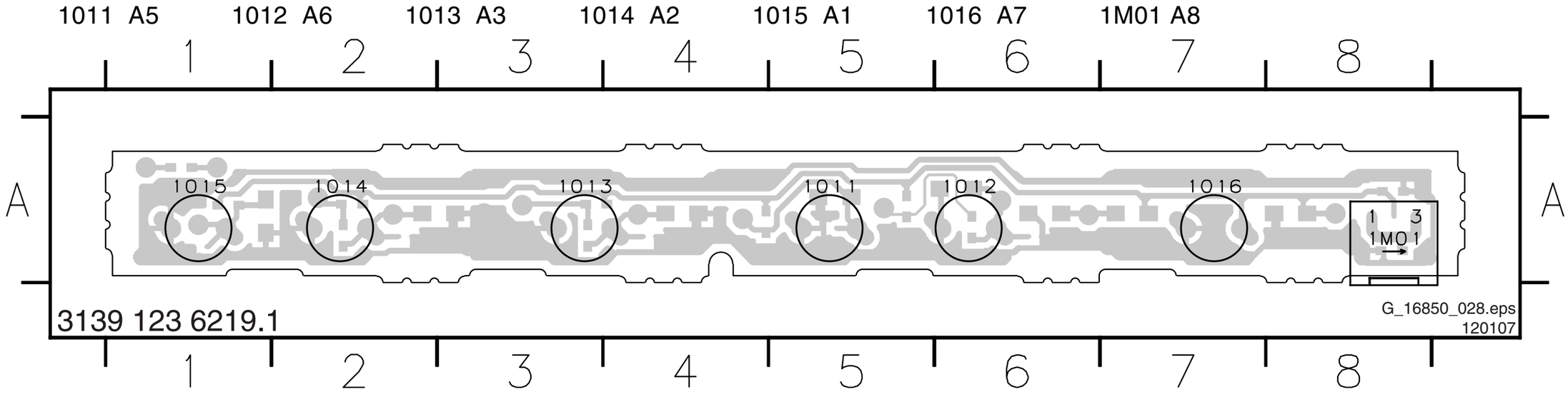

Layout Keyboard Control Panel (Bottom Side)

2001 A1 3011 A6 3013 A5 3015 A3 3017 A7 4001 A1 6011 A2 6013 A1 6015 A3 6017 A6
3010 A4 3012 A8 3014 A7 3016 A6 3099 A8 5001 A1 6012 A3 6014 A4 6016 A5 6018 A8

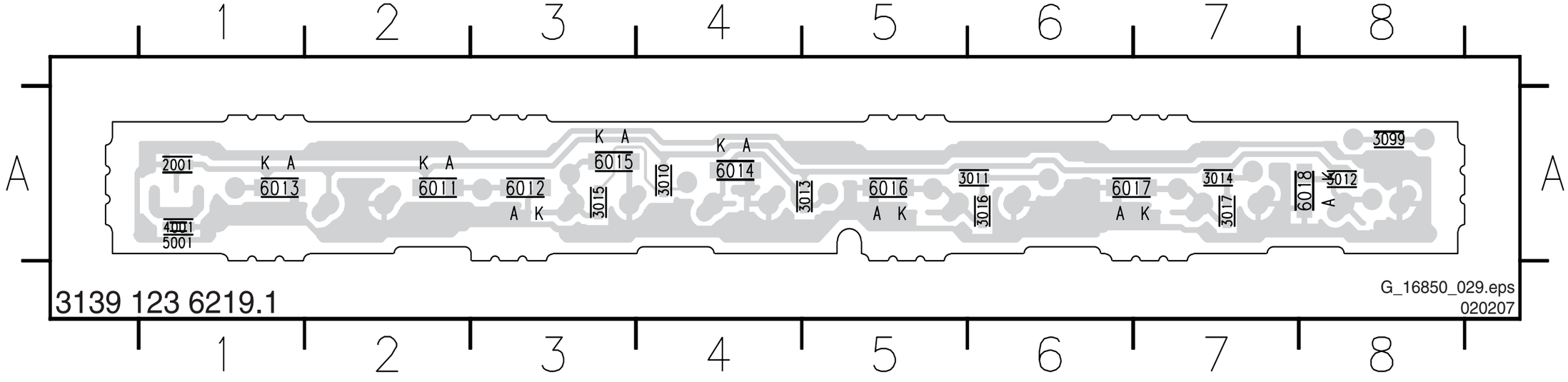

Front IR / LED Panel

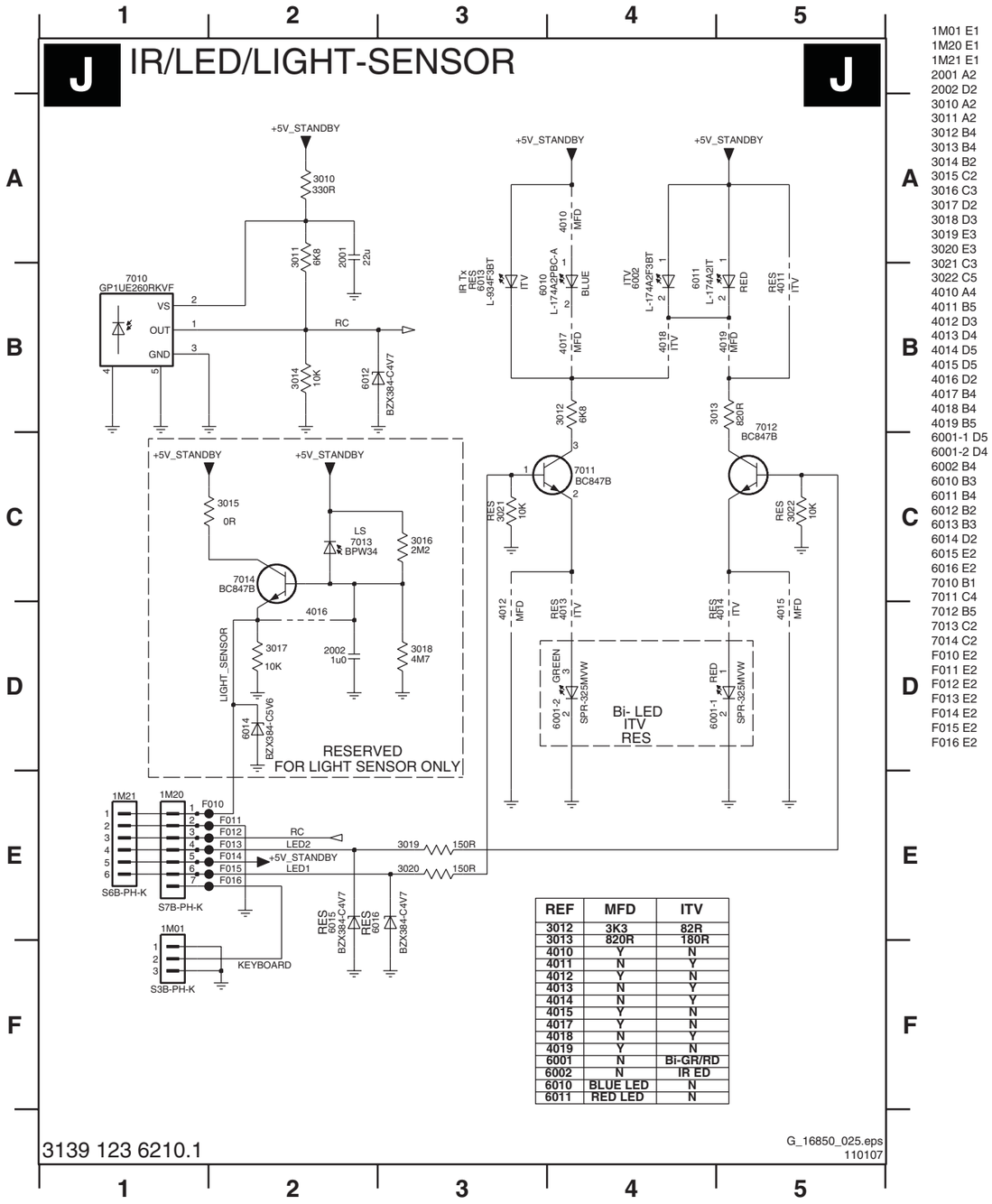

REF	MFD	ITV
3012	3K3	82R
3013	820R	180R
4010	Y	N
4011	N	Y
4012	Y	N
4013	N	Y
4014	N	Y
4015	Y	N
4017	Y	N
4018	N	Y
4019	Y	N
6001	N	Bi-GR/RD
6002	N	IR ED
6010	BLUE LED	N
6011	RED LED	N

1M01 E1
1M20 E1
1M21 E1
2001 A2
2002 D2
3010 A2
3011 A2
3012 B4
3013 B4
3014 B2
3015 C2
3016 C3
3017 D2
3018 D3
3019 E3
3020 E3
3021 C3
3022 C5
4010 A4
4011 B5
4012 D3
4013 D4
4014 D5
4015 D5
4016 D2
4017 B4
4018 B4
4019 B5
6001-1 D5
6001-2 D4
6002 B4
6010 B3
6011 B4
6012 B2
6013 B3
6014 D2
6015 E2
6016 E2
7010 B1
7011 C4
7012 B5
7013 C2
7014 C2
F010 E2
F011 E2
F012 E2
F013 E2
F014 E2
F015 E2
F016 E2

Personal Notes:

E_06532_012.eps
131004

Layout Front IR / LED Panel (Top Side)

1M01	D4	6001	B2	6011	B1	7013	B4
1M20	D2	6002	B1	6013	A1		
1M21	D2	6010	B2	7010	A3		

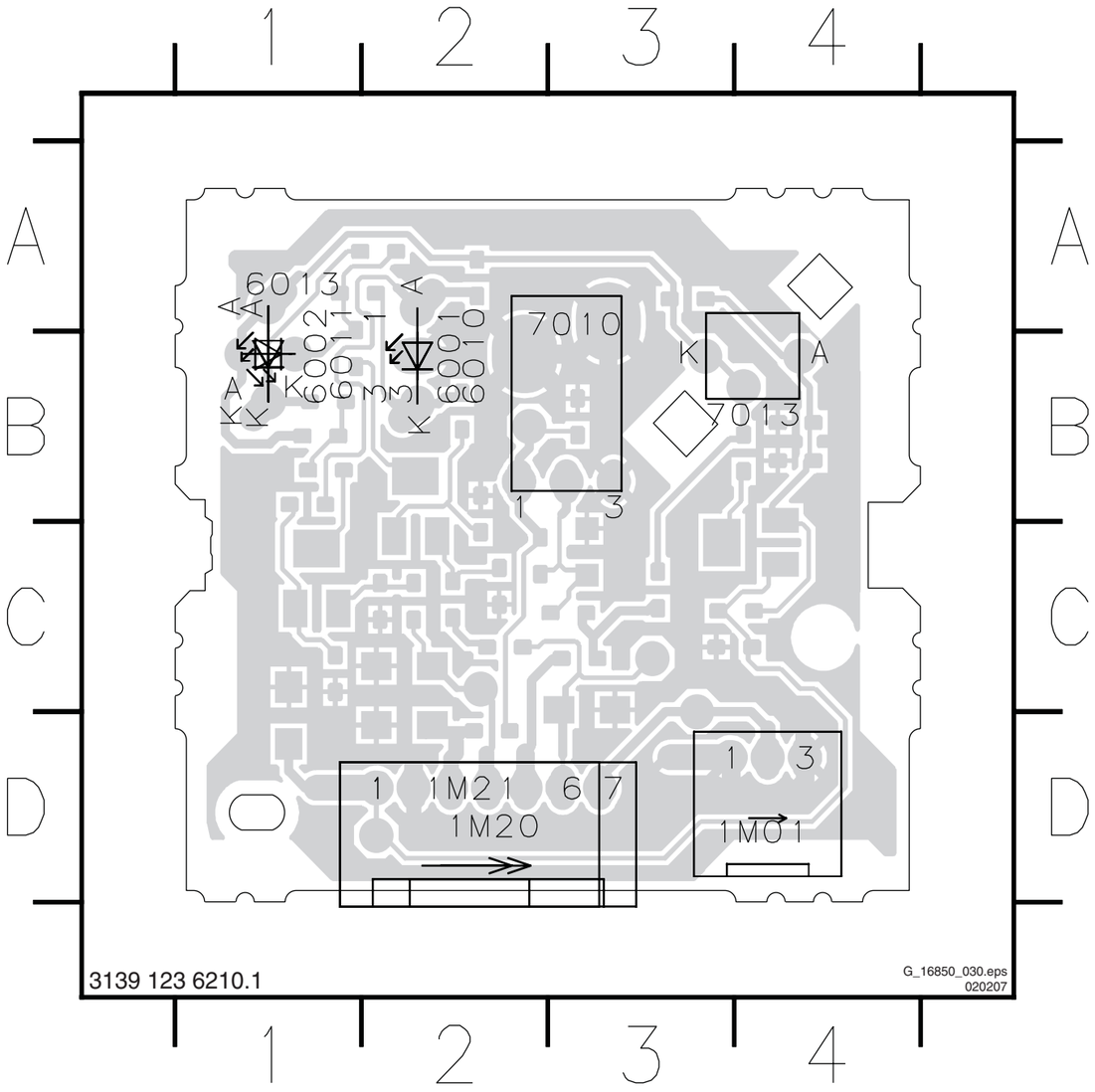

Layout Front IR / LED Panel (Bottom Side)

2001	C2	3014	B2	3020	C3	4005	C2	4015	C4	6014	D4
2002	B1	3015	B1	3021	C3	4010	A3	4016	C1	6015	C3
3010	C2	3016	A2	3022	C3	4011	B4	4017	A4	6016	C2
3011	C3	3017	C1	4001	D3	4012	B3	4018	A3	7011	B3
3012	B4	3018	B1	4002	C3	4013	B3	4019	B4	7012	C4
3013	B4	3019	C3	4004	C2	4014	B4	6012	D3	7014	C1

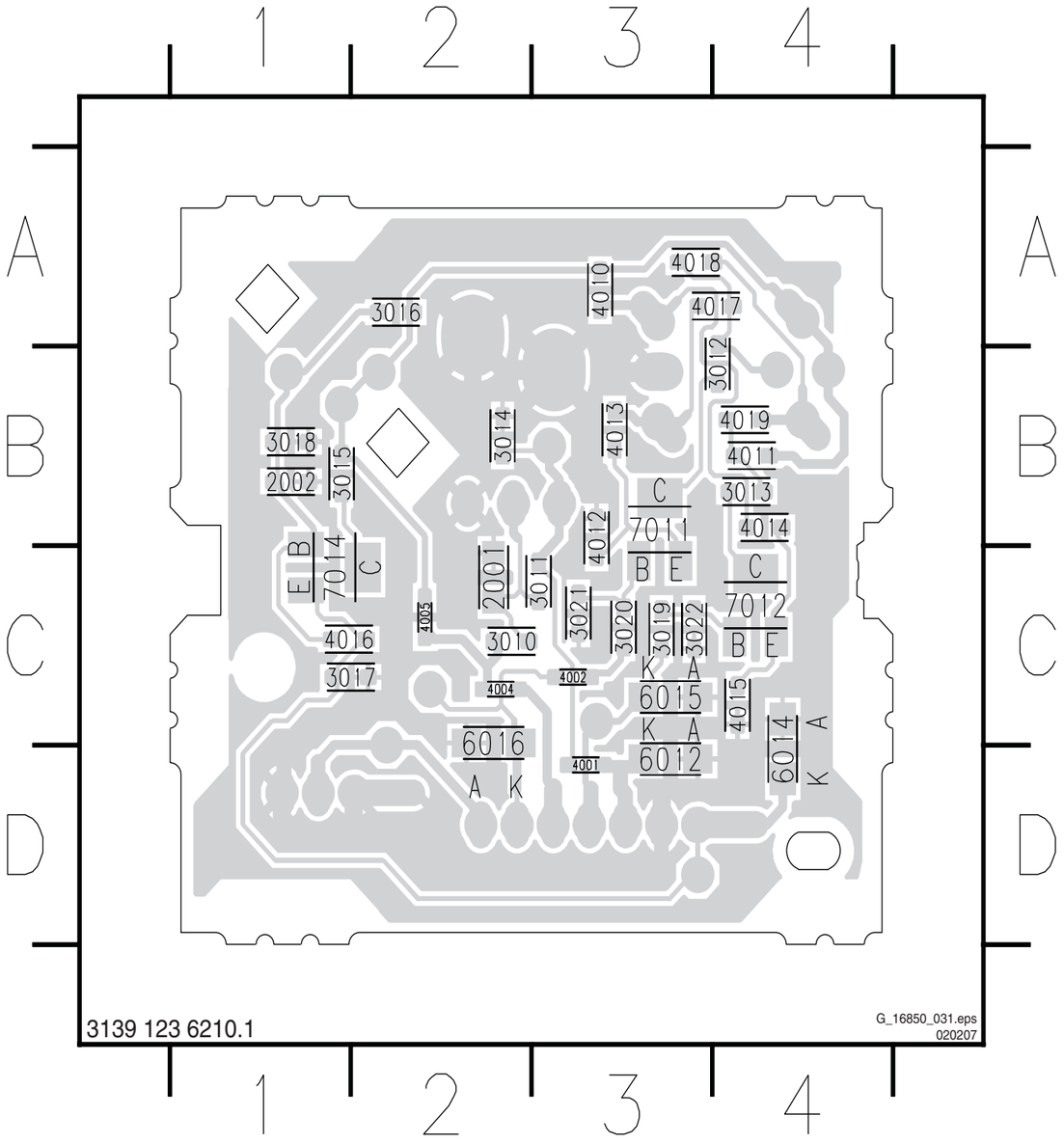

AL Inter Connect Panel: DC/DC Converter

M1 DC/DC CONVERTER

M4 FROM INTER-CONNECTION +12V_SSB
M4 FROM INTER-CONNECTION +12V_BOLT-ON
M2 TO PACIFIC3 SUPPLY_FAULT
M2

LC07D AMBI-LHT INTER-CONNECT MULTIPLE 12NC : 3139_123_62301_04
LC07D AMBI-LHT INTER-CONNECT SINGLE 12NC : 3139_123_62311_04

"100" ~ "199"

G_16840_072.eps
230107

AL Inter Connect Panel: Pacific 3

M2 PACIFIC 3

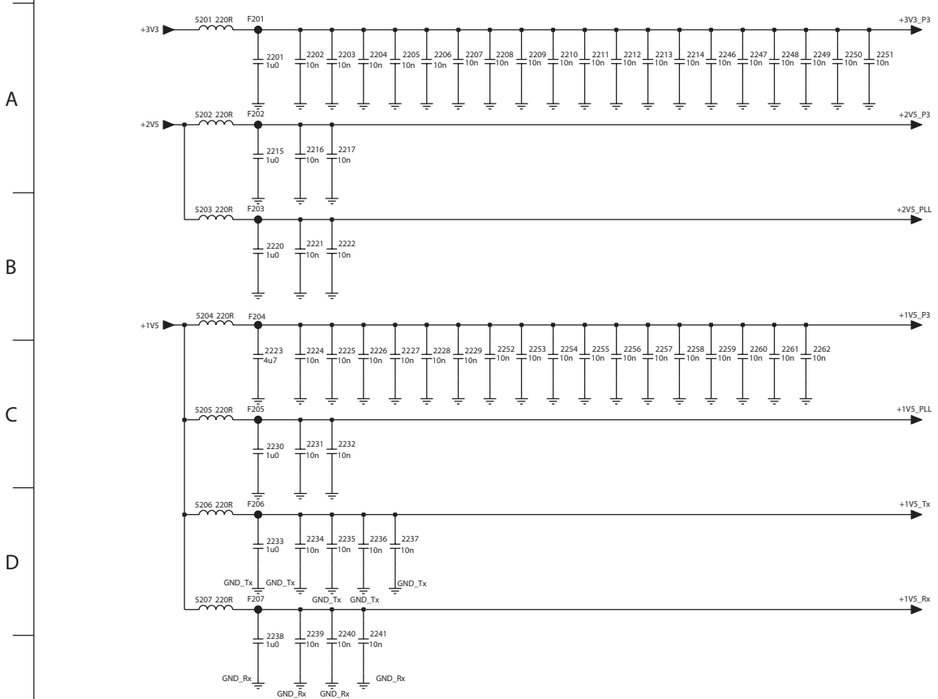

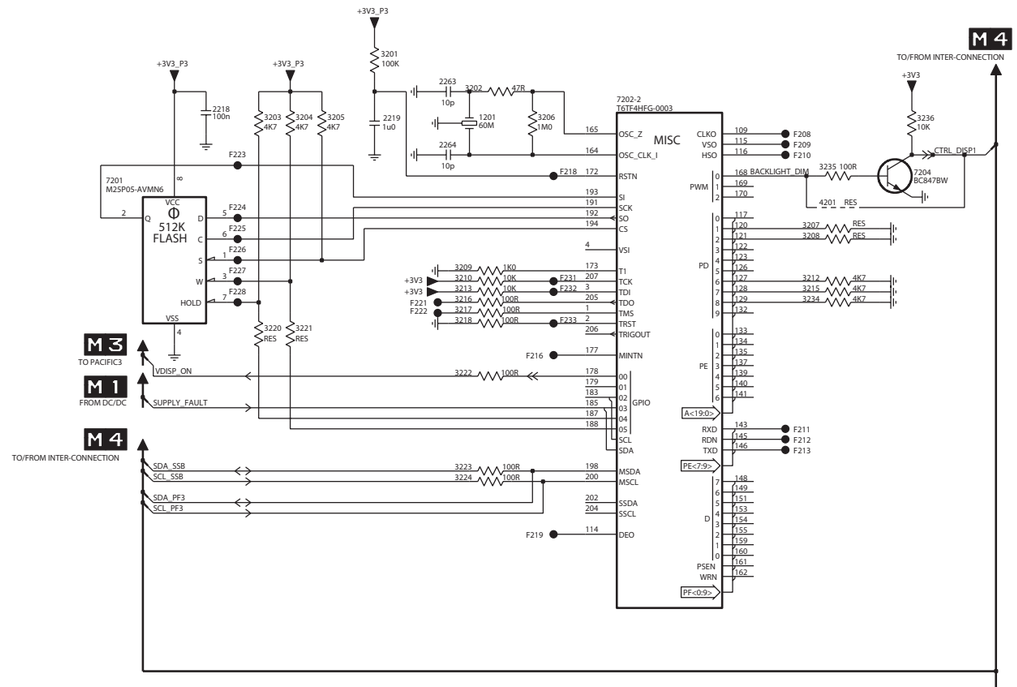

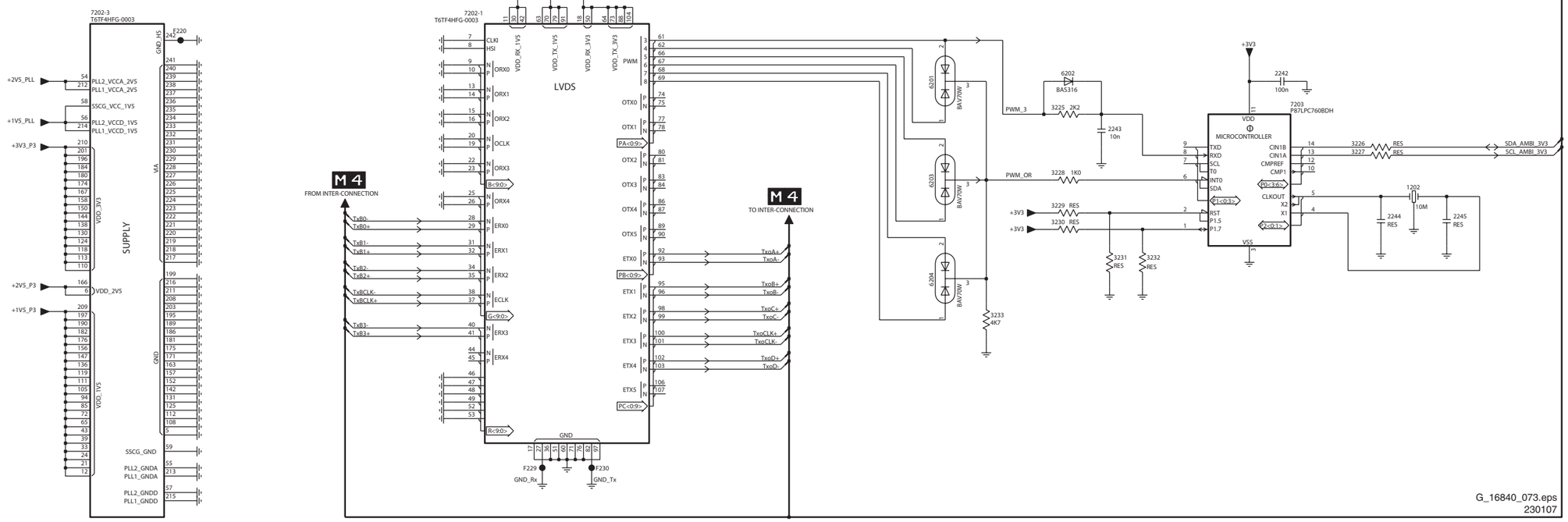

3139 123 6231.1

1201 A11 F201 A2
1202 G13 F202 A2
2201 A2 F203 B2
2202 A2 F204 B2
2203 A3 F205 C2
2204 A3 F206 D2
2205 A3 F207 D2
2206 A3 F208 A13
2207 A3 F209 A13
2208 A4 F210 A13
2209 A4 F211 C13
2210 A4 F212 C13
2211 A4 F213 C13
2212 A5 F216 C11
2213 A5 F218 A11
2214 A5 F219 D11
2215 A2 F220 E2
2216 A2 F221 B10
2217 A3 F222 B10
2218 A9 F223 A9
2219 A10 F224 B9
2220 B2 F225 B9
2221 B2 F226 B9
2222 B3 F227 B9
2223 C2 F228 B9
2224 C2 F229 I5
2225 C3 F230 I6
2226 C3 F231 B11
2227 C3 F232 B11
2228 C3 F233 B11
2229 C3
2230 C2
2231 C2
2232 C3
2233 D2
2234 D2
2235 D3
2236 D3
2237 D3
2238 E2
2239 D2
2240 D3
2241 D3
2242 F12
2243 F11
2244 G13
2245 G14
2246 A5
2247 A5
2248 A6
2249 A6
2250 A6
2251 A6
2252 C4
2253 C4
2254 C4
2255 C4
2256 C5
2257 C5
2258 C5
2259 C5
2260 C5
2261 C6
2262 C6
2263 A11
2264 A11
3201 A10
3202 A11
3203 A9
3204 A10
3205 A10
3206 A11
3207 B13
3208 B13
3209 B11
3210 B11
3212 B13
3213 B11
3215 B13
3216 B11
3217 B11
3218 B11
3220 B9
3221 B10
3222 C11
3223 C11
3224 D11
3225 F10
3226 F13
3227 G13
3228 G10
3229 G10
3230 G10
3231 G11
3232 G11
3233 H9
3234 B13
3235 A13
3236 A14
4201 B13
5201 A2
5202 A2
5203 B2
5204 B2
5205 C2
5206 D2
5207 D2
6201 F9
6202 F10
6203 G9
6204 H9
7201 B8
7202-1 E5
7202-2 A12
7202-3 E2
7203 F12
7204 A14

AL Inter Connect Panel: Display Interface

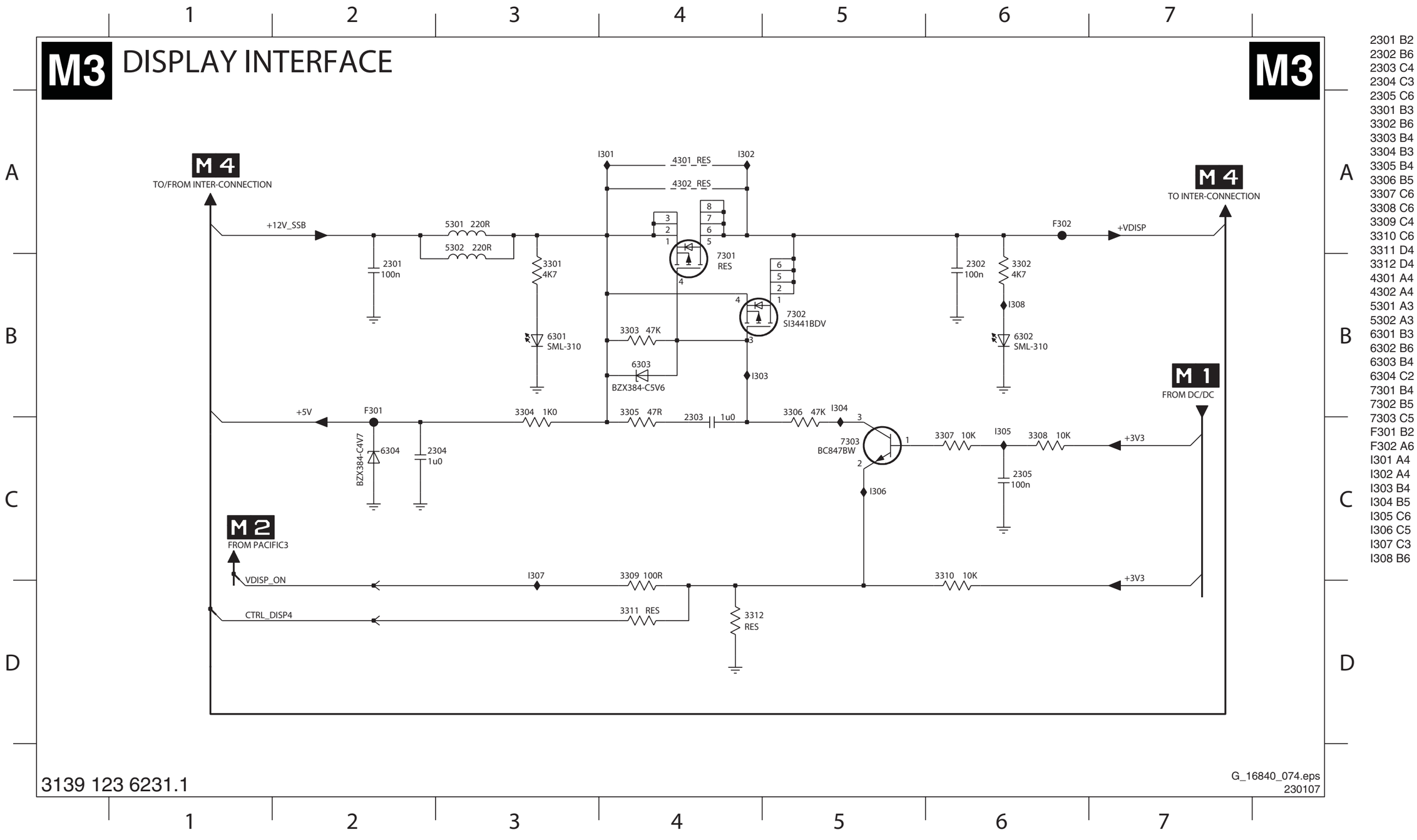

2301 B2
2302 B6
2303 C4
2304 C3
2305 C6
3301 B3
3302 B6
3303 B4
3304 B3
3305 B4
3306 B5
3307 C6
3308 C6
3309 C4
3310 C6
3311 D4
3312 D4
4301 A4
4302 A4
5301 A3
5302 A3
6301 B3
6302 B6
6303 B4
6304 C2
7301 B4
7302 B5
7303 C5
F301 B2
F302 A6
I301 A4
I302 A4
I303 B4
I304 B5
I305 C6
I306 C5
I307 C3
I308 B6

AL Inter Connect Panel: Inter Connection

M4 INTER-CONNECTION

M1/M5 TO DC-DC CONV / TO DC/DC AMBI +12V_BOLT-ON

M5 FROM DC/DC AMBI +15V

FROM PSU — 1401 — B9B-PH-SM4-TBT(LF)

F401 F414 F407 F415 F409 F416

* FOR AMBI DC/DC BYPASS

4401 4402 4403 4404 4413 4414 4415 4416

1402 — B8B-PH-SM4-TBT(LF) — TO AMBI-LIGHT MODULE

FROM LC07D 2K7 SSB — 1403 — B4B-PH-SM4-TBT(LF)

F402 F403 F404 F405

+5V +5V

3412 RES 3413 RES

4411 RES 4412 RES

3415 100R 3416 RES F411 F412

SCL_AMBI SDA_AMBI I2C_SEL1_AMBI I2C_SEL2_AMBI

1404 — B5B-PH-SM4-TBT(LF) — TO AMBI-LIGHT MODULE

M2 TO/FROM PACIFIC3

PAC3 PROGRAMMING — 1417 — +3V3

F433

3410 100R F434 SDA_PF3

3411 100R F435 SCL_PF3

SDA_AMBI_3V3 F410

SCL_AMBI_3V3 F408

+3V3 +5V

7401 RES 3401 RES 3402 RES 4405

7402 RES 3403 RES 3404 RES 4406

M1/M3 TO DC/DC / TO DISPLAY INTF

M3 FROM DISPLAY INTF +VDISP

F413 +12V_SSB

1405 — LVDS INPUT CONNECTOR FROM LC07D 2K7 SSB — 0-1453230-3

CTRL_DISP1 CTRL_DISP2 CTRL_DISP3 CTRL_DISP4 NC NC

TxB0- TxoA- TxB0+ TxoA+

TxB1- TxoB- TxB1+ TxoB+

TxB2- TxoC- TxB2+ TxoC+

TxBCLK- TxoCLK- TxBCLK+ TxoCLK+

TxB3- TxoD- TxB3+ TxoD+

2401 2403 2405 2407 2409 2411 2413 2415 2417 2419 RES

DLW21S 1407 1408 1409 1410 1411 1412 1413 1414 1415 1416

3405 100R 3406 100R 3407 100R 3408 100R 3409 100R

2402 2404 2406 2408 2410 2412 2414 2416 2418 2420 RES

SCL_SSB SDA_SSB CTRL_DISP1 CTRL_DISP2 CTRL_DISP3 CTRL_DISP4

1406 — LVDS OUTPUT CONNECTOR TO PANEL — 0-1453230-3

4407 CTRL_Display1

4408 CTRL_Display2

4409 CTRL_Display3

4410 CTRL_Display4

3417 0R SCL_DISP

3418 0R SDA_DISP

NC NC

2423 100p 2424 100p

M3 TO DISPLAY INTF

3139 123 6231.1

G_16840_075.eps 230107

1401 A1 F403 A5
1402 A3 F404 A5
1403 A4 F405 A5
1404 A8 F407 A2
1405 C1 F408 C5
1406 C8 F409 B1
1407 C4 F410 B5
1408 C5 F411 A6
1409 D4 F412 A6
1410 D5 F413 C2
1411 D4 F414 A1
1412 D5 F415 A3
1413 E4 F416 B3
1414 E5 F433 C1
1415 E4 F434 B2
1416 E5 F435 B2
1417 B1
2401 C3
2402 C6
2403 C3
2404 C6
2405 D3
2406 D6
2407 D3
2408 D6
2409 D3
2410 D6
2411 D3
2412 D6
2413 E3
2414 E6
2415 E3
2416 E6
2417 E3
2418 E6
2419 E3
2420 E6
2423 E7
2424 E8
3401 B5
3402 B6
3403 C5
3404 C6
3405 C4
3406 D4
3407 D4
3408 E4
3409 E4
3410 B2
3411 B2
3412 A5
3413 A6
3415 A6
3416 A6
3417 E7
3418 E7
4401 A2
4402 A2
4403 A2
4404 A2
4405 B6
4406 C6
4407 D7
4408 D7
4409 E7
4410 E7
4411 A5
4412 A6
4413 A2
4414 A2
4415 A2
4416 B2
7401 B6
7402 C6
F401 A1
F402 A5

AL Inter Connect Panel: DC/DC Ambi

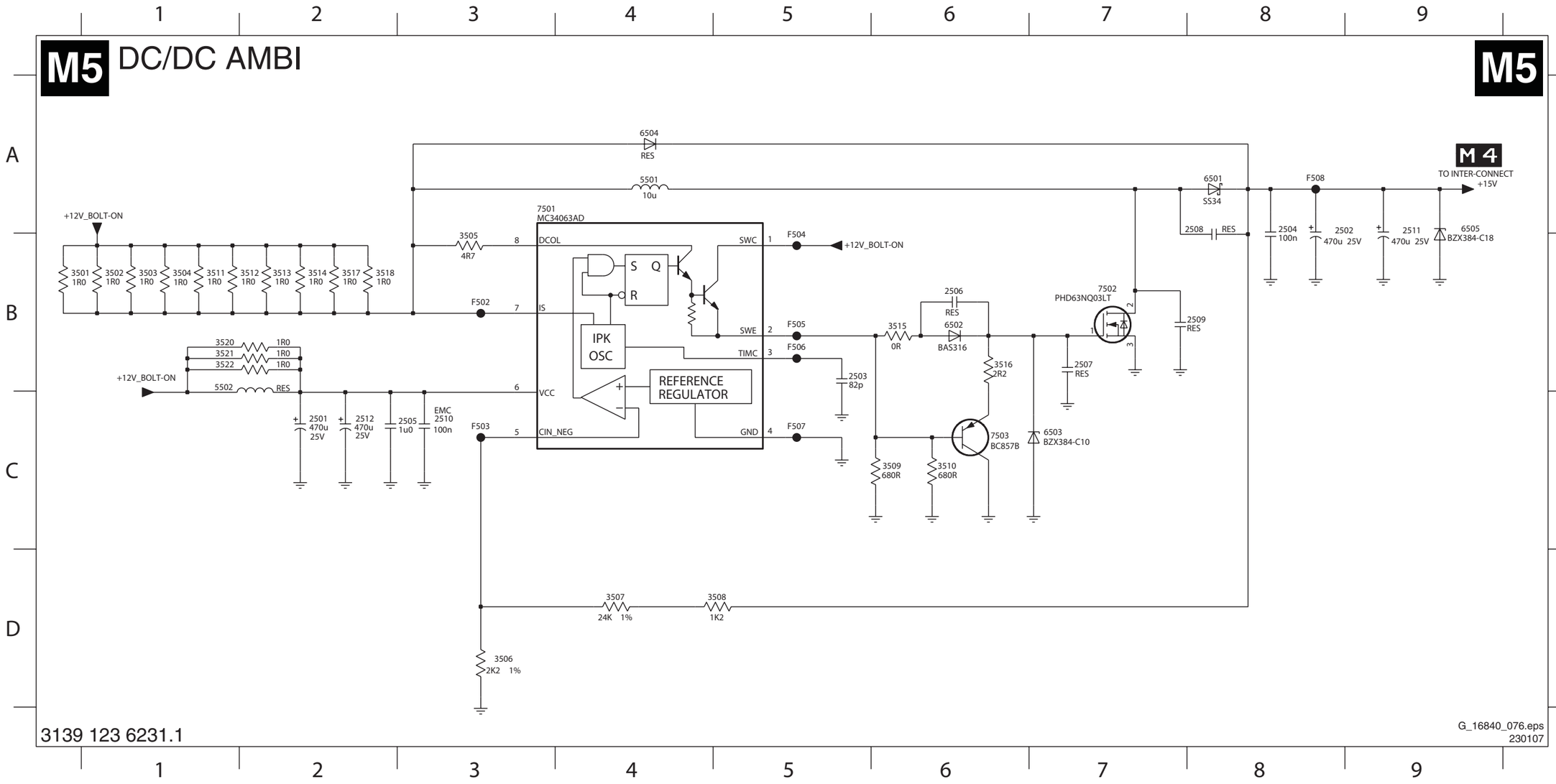

2501 C2
2502 A8
2503 B5
2504 A8
2505 C3
2506 B6
2507 B7
2508 A8
2509 B8
2510 C3
2511 A9
2512 C2
3501 B1
3502 B1
3503 B1
3504 B1
3505 B3
3506 D3
3507 D4
3508 D5
3509 C6
3510 C6
3511 B1
3512 B2
3513 B2
3514 B2
3515 B6
3516 B6
3517 B2
3518 B2
3520 B1
3521 B1
3522 B1
5501 A4
5502 B1
6501 A8
6502 B6
6503 C7
6504 A4
6505 A9
7501 A3
7502 B7
7503 C6
F502 B3
F503 C3
F504 B5
F505 B5
F506 B5
F507 C5
F508 A8

Layout AmbiLight Inter Connect Panel (Top Side)

1202 A3	1408 A3	1416 A2	2121 A2	2230 A3	2247 A3	2407 A3	2415 A3	2504 A1	3205 A3	3230 A3	3407 A3	3416 A2	3514 A1	4412 A2	5201 A2	6202 A3	7103 A3
1401 A1	1409 A3	1417 A3	2123 A2	2233 A3	2260 A3	2408 A3	2416 A3	2507 A1	3220 A3	3231 A3	3408 A3	3501 A1	3517 A1	5101 A2	5202 A3	6203 A3	7201 A3
1402 A1	1410 A3	2103 A2	2201 A3	2234 A3	2401 A3	2409 A3	2417 A3	2508 A1	3221 A3	3232 A3	3409 A3	3502 A1	3518 A1	5102 A2	5204 A2	6204 A3	7203 A3
1403 A2	1411 A3	2104 A2	2215 A3	2242 A3	2402 A3	2410 A3	2418 A3	2509 A1	3225 A3	3233 A3	3410 A3	3503 A1	3520 A1	5103 A2	5205 A3	6301 A3	7204 A3
1404 A2	1412 A3	2105 A2	2217 A3	2243 A3	2403 A3	2411 A3	2419 A3	2511 A2	3226 A3	3235 A3	3411 A3	3504 A1	3521 A1	5104 A2	5206 A3	6302 A2	7502 A1
1405 A3	1413 A3	2106 A3	2218 A3	2244 A3	2404 A3	2412 A3	2420 A2	2512 A2	3227 A3	3236 A3	3412 A2	3511 A1	3522 A1	5105 A2	5501 A2	6501 A2	
1406 A3	1414 A3	2110 A2	2222 A3	2245 A3	2405 A3	2413 A3	2501 A1	3203 A3	3228 A3	3405 A3	3413 A2	3512 A1	4201 A3	5106 A2	5502 A1	6504 A1	
1407 A3	1415 A3	2111 A2	2223 A3	2246 A3	2406 A3	2414 A3	2502 A1	3204 A3	3229 A3	3406 A3	3415 A2	3513 A1	4411 A2	5107 A2	6201 A3	6505 A1	

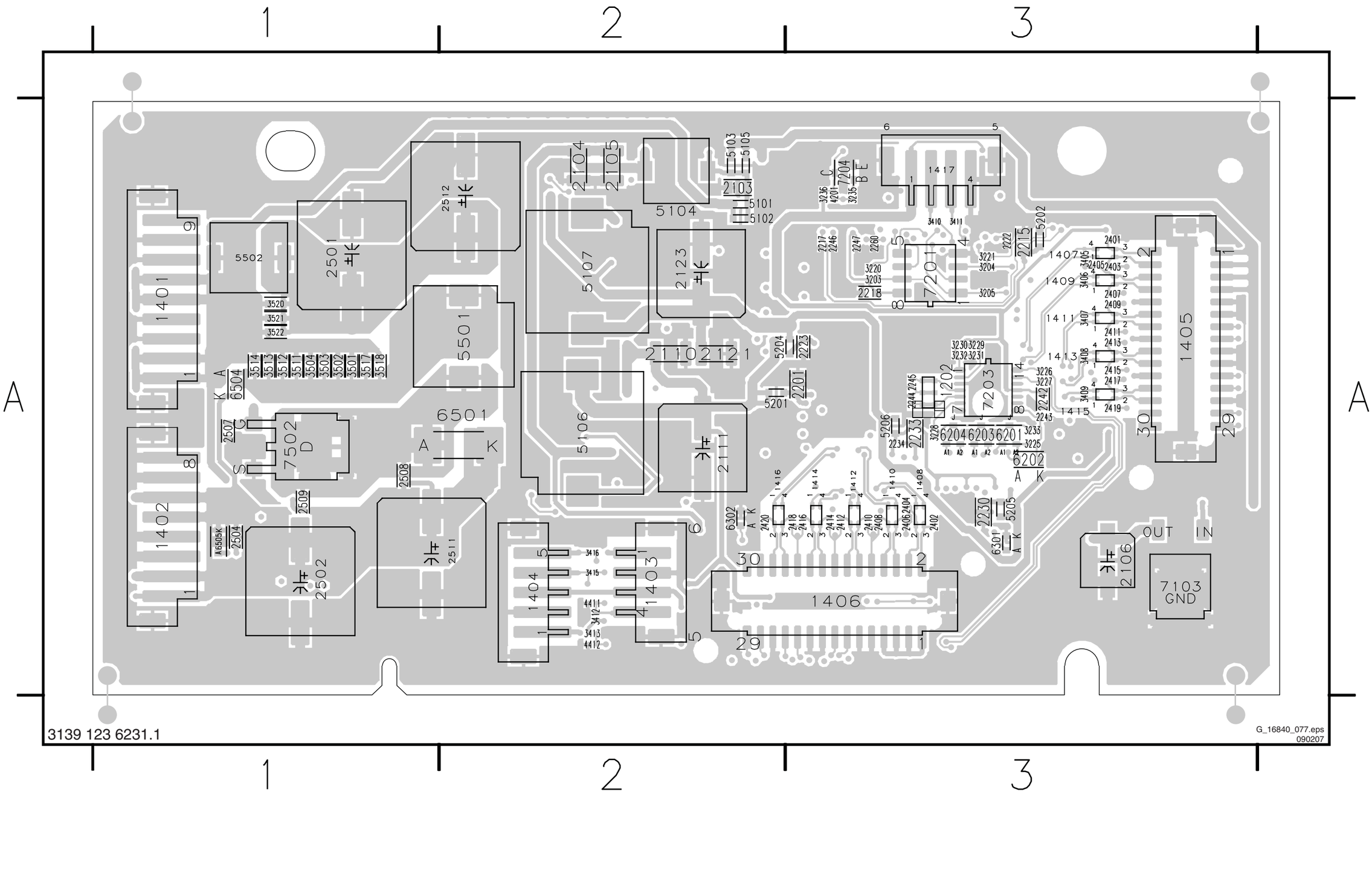

Layout AmbiLight Inter Connect Panel (Bottom Side)

1201 A1	2119 A2	2133 A2	2212 A2	2228 A1	2248 A1	2259 A2	2424 A2	3107 A2	3118 A2	3129 A2	3141 A2	3209 A1	3234 A2	3311 A2	3508 A3	4404 A3	5203 A1	6503 A3	7401 A2
2107 A2	2120 A2	2202 A1	2213 A2	2229 A1	2249 A1	2261 A1	2503 A3	3108 A2	3119 A2	3130 A2	3142 A2	3210 A1	3301 A1	3312 A2	3509 A3	4405 A2	5207 A1	7101 A2	7402 A2
2108 A2	2124 A2	2203 A1	2214 A2	2231 A1	2250 A1	2262 A1	2505 A3	3109 A2	3120 A2	3131 A2	3143 A2	3212 A2	3302 A1	3401 A2	3510 A3	4406 A2	5301 A1	7102 A2	7501 A3
2109 A2	2125 A2	2204 A1	2216 A1	2232 A1	2251 A1	2263 A1	2506 A3	3110 A2	3121 A2	3132 A2	3144 A2	3213 A1	3303 A1	3402 A2	3515 A3	4407 A1	5302 A1	7104 A2	7503 A3
2112 A2	2126 A2	2205 A1	2219 A1	2235 A1	2252 A1	2264 A1	2510 A3	3111 A2	3122 A2	3134 A2	3145 A2	3215 A2	3304 A1	3403 A2	3516 A3	4408 A1	6101 A2	7105 A2	
2113 A2	2127 A2	2206 A1	2220 A1	2236 A1	2253 A1	2301 A1	3101 A2	3112 A2	3123 A2	3135 A2	3146 A2	3216 A1	3305 A1	3404 A2	4101 A2	4409 A1	6102 A2	7106 A2	
2114 A2	2128 A2	2207 A1	2221 A1	2237 A1	2254 A1	2302 A1	3102 A2	3113 A2	3124 A2	3136 A2	3201 A1	3217 A1	3306 A1	3417 A2	4301 A1	4410 A1	6103 A2	7107 A2	
2115 A2	2129 A2	2208 A2	2224 A1	2238 A1	2255 A2	2303 A1	3103 A2	3114 A2	3125 A2	3137 A2	3202 A1	3218 A1	3307 A1	3418 A2	4302 A1	4413 A3	6104 A2	7202 A1	
2116 A2	2130 A2	2209 A2	2225 A1	2239 A1	2256 A2	2304 A1	3104 A2	3115 A2	3126 A2	3138 A2	3206 A1	3222 A1	3308 A2	3505 A3	4401 A3	4414 A3	6303 A1	7301 A1	
2117 A2	2131 A2	2210 A2	2226 A1	2240 A1	2257 A1	2305 A1	3105 A2	3116 A2	3127 A2	3139 A2	3207 A2	3223 A1	3309 A2	3506 A3	4402 A3	4415 A3	6304 A1	7302 A1	
2118 A2	2132 A2	2211 A2	2227 A1	2241 A1	2258 A2	2423 A2	3106 A2	3117 A2	3128 A2	3140 A2	3208 A2	3224 A1	3310 A2	3507 A3	4403 A3	4416 A3	6502 A3	7303 A2	

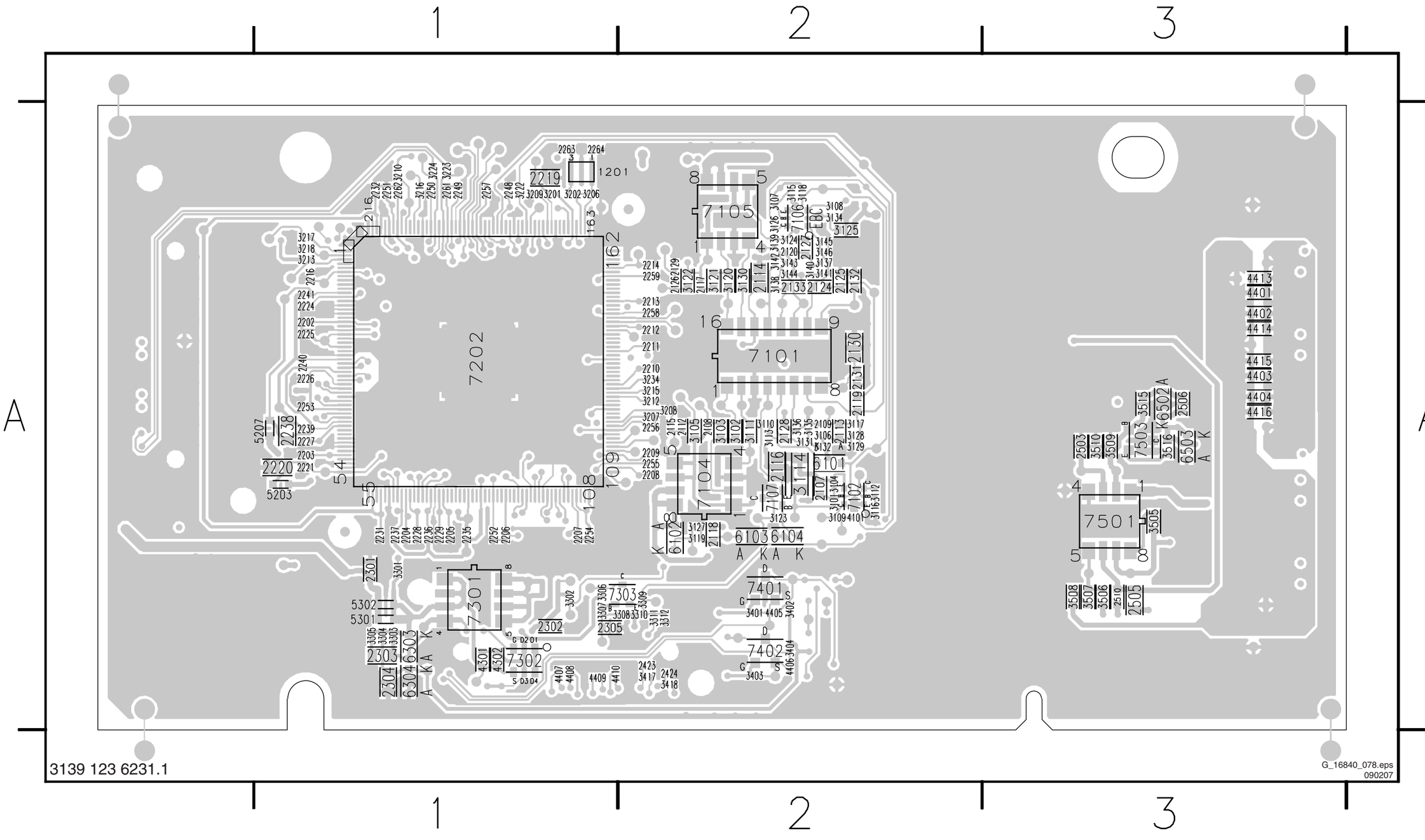

8. Alignments

Index of this chapter:

8.1 General Alignment Conditions
8.2 Hardware Alignments
8.3 Software Alignments
8.4 Option Settings

8.1 General Alignment Conditions

8.1.1 Start Conditions

Perform all electrical adjustments under the following conditions:

- Power supply voltage (depends on region):
  - AP-NTSC: 120 V_{AC} or 230 V_{AC} / 50 Hz (± 10%).
  - AP-PAL-multi: 120 - 230 V_{AC} / 50 Hz (± 10%).
  - EU: 230 V_{AC} / 50 Hz (± 10%).
  - LATAM-NTSC: 120 - 230 V_{AC} / 50 Hz (± 10%).
  - US: 120 V_{AC} / 60 Hz (± 10%).
- Connect the set to the AC Power via an isolation transformer with low internal resistance.
- Allow the set to warm up for approximately 15 minutes.
- Measure voltages and waveforms in relation to chassis ground (with the exception of the voltages on the primary side of the power supply).
  Caution: It is not allowed to use heatsinks as ground.
- Test probe: Ri > 10 Mohm, Ci < 20 pF.
- Use an isolated trimmer/screwdriver to perform alignments.

8.1.2 Initial Settings

Perform all electrical adjustments with the following initial settings (via the "Active Control" button on the RC):

1. To avoid the working of the lightsensor, set ACTIVE CONTROL to OFF.
2. Set SMART PICTURE to NATURAL/ECO.

8.1.3 Alignment Sequence

- First, set the correct options:
  - In SAM, select (SERVICE) OPTIONS -> OPT. NO,
  - Fill in the option settings according to the set sticker (see also paragraph "Option Settings"),
  - Select STORE OPTIONS and push OK on the remote control,
  - After storing, the set must be restarted!
- Warming up (>10 minutes).
- White point alignment.

8.2 Hardware Alignments

There are no hardware alignments foreseen for this chassis.

8.3 Software Alignments

Put the set in SAM mode (see the "Service Modes, Error Codes and Fault Finding" section). The SAM menu will now appear on the screen. Select ALIGNMENTS and go to one of the sub menus. The alignments are explained below.

Notes:

- All changes must be stored manually.
- If an empty EAROM (permanent memory) is detected, all settings are set to pre-programmed default values.

8.3.1 General

For the next alignments, supply the following test signals via a video generator to the RF input:

- **EU/AP-PAL** models: a PAL B/G TV-signal with a signal strength of at least 1 mV and a frequency of 475.25 MHz
- **US/AP-NTSC** models: an NTSC M/N TV-signal with a signal strength of at least 1 mV and a frequency of 61.25 MHz (channel 3).
- **LATAM** models: an NTSC M TV-signal with a signal strength of at least 1 mV and a frequency of 61.25 MHz (channel 3).

Tuner AGC

Purpose: To keep the tuner output signal constant as the input signal amplitude varies.

For this chassis, no alignment is necessary, as the AGC alignment is done automatically (standard value: “32”).

IF PLL offset pos. (and neg.)

The IF PLL Offset value needs to be realigned in case the MPIF and/or the NVM have been replaced. This is not necessary in case only the tuner has been replaced. Default values are:

- For Europe PAL: 40
- For Europe SECAM: 32
- For USA NTSC: 32

In case the result is not satisfying (distortion in sound and/or discolouration in left and right part of the picture), use the following method to align the IF PLL Offset value:

- Switch set “off”.
- Disconnect speakers and connect a resistor of 1 kΩ instead.
- Connect AC voltmeter at resistor.
- Switch set “on”.
- Put “Volume” at maximum.
- Align PLL until voltage is at minimum.

In case the minimum value on the AC voltmeter is found in a range of IF PLL Offset values, the value should be taken that is in the middle of this range.

8.3.2 White Point

- Set ACTIVE CONTROL to OFF.
- In the [MENU] -> PICTURE user menu, set:
  - DYNAMIC CONTRAST to OFF.
  - COLOR ENHANCEMENT to OFF.
  - COLOR to “0”.
  - CONTRAST to “100”.
  - BRIGHTNESS to “50”.
- Go to the SAM and select ALIGNMENTS -> WHITE POINT.

Method 1 (with color analyzer):

- Use a 100% white screen as input signal and set the following values:
  - COLOR TEMPERATURE: Tint to be aligned.
  - All WHITE POINT values to: “127”.
  - RED BL OFFSET value to: “7”.
  - GREEN BL OFFSET value to: “4”.
- Measure with a calibrated (phosphor- independent) color analyzer in the centre of the screen. Consequently, the measurement needs to be done in a dark environment.
- Adjust, by means of decreasing the value of one or two white points, the correct x,y coordinates (see table "White D alignment values"). Tolerance: dx,dy: ± 0.004.
- Repeat this step for the other Color Temperatures that need to be aligned.

- When finished press STORE (in the SAM root menu) to store the aligned values to the NVM.
- Restore the initial picture settings after the alignments.

Table 8-1 White D alignment values

Color Temp. (degr. K)	Cool (11000)	Normal (9100)	Warm (6500)
x	0.276	0.285	0.313
y	0.282	0.293	0.329

When such equipment is not available, use “method 2”.

Method 2 (without color analyzer):
If you do not have a color analyzer, you can use the default values. This is the next best solution. The default values are average values coming from production (statistics).

1. Select a COLOUR TEMPERATURE (e.g. COOL, NORMAL, or WARM).
2. Set the RED, GREEN and BLUE default values according to the values in the "Tint settings" table.
3. When finished press STORE (in the SAM root menu) to store the aligned values to the NVM.
4. Restore the initial picture settings after the alignments.

Table 8-2 Tint

Colour Temp.	R	G	B
Cool	113	116	118
Normal	126	121	118
Warm	124	107	83

8.4 Option Settings

8.4.1 Introduction

The microprocessor communicates with a large number of I^2C ICs in the set. To ensure good communication and to make digital diagnosis possible, the microprocessor has to know which ICs to address. The presence / absence of these specific ICs (or functions) is made known via the option codes.

Notes:
- After changing the option(s), save them via “STORE”.
- The new option setting is only active after the TV is switched “OFF” and “ON” again (the EAROM is then read again).

8.4.2 Dealer Options

Table 8-3 Dealer options

Menu item	Subjects	Options	Description
Personal Options	Virgin Mode	On	TV starts up (once) with a language selection menu after the Mains switch is turned "ON" for the first time (virgin mode)
		Off	TV does not start up (once) with a language selection menu after the Mains switch is turned "ON" for the first time (virgin mode)
	PDP contrast reduction	On	Not applicable to LCD sets
		Off	Not applicable to LCD sets

8.4.3 (Service) Options

Select the sub menu's to set the initialization codes (options).

Table 8-4 Service options

Menu-item	Subjects	Options	Description
PIP/DS	Dualscreen	None	no DS
Data	EPG	On / Off	Feature present / not present
	IR blaster	Off	Feature not present
	RRT	Yes	Parental control is enabled via the Regional Rating Table (RRT)
Display	Screen	“Value”	Used screen size, type, and resolution (see table “Display code overview” in chapter “Service Modes” for the values)
	Clear LCD	On	Feature present
	Dimming backlight	On	Feature present
Video Repro	Picture Processing	No Spider	Feature not present
	Combfilter	None / 2D / 3D	Feature not present / 2D / 3D
	Ambient Light	Off / Mono / Stereo	Inverter not present / two inverters mono / two inverters stereo
	AmbiLight technology	LED	Feature present
	Pacific 3	On / Off	Feature present / not present
	MOP	On / Off	Feature present / not present (for sets with AmbiLight this is “on”)
	POD	Off	Feature not present
	Light sensor	Off	Feature not present
Source Selection	AV1 type	(CVBS) YPbPr LR	Feature present
	AV2 type	(CVBS) YPbPr LR	Feature present
	AV3 type	None	Feature not present
	AV4 type	None	Feature not present
	HDMI 1	No analog audio	HDMI without analog audio
	HDMI 2	No analog audio	HDMI without analog audio
	HDMI 3	None	No HDMI
	USB version	USB 1.1	USB 1.1 in side I/O panel
	IEEE1394	Not present	Firewire connector not present
	Ethernet	Off	Connector not present
	VGA	Off	Connector not present
	SPDIF inputs	None	Connector not present
Audio Repro	Acoustic System (Cabinet design, used for setting dynamic audio parameters).	LC07D 26 ME7	Depends on model
		LC07D 32 ME7	Depends on model
		LC07D 42 LCD ME7	Depends on model
		LC07D 42 PDP ME7	Depends on model
	Center mode support	Off	Feature not present
	Inverted Class D amplifier	Yes / No	Feature present / not present
Miscellaneous	Region	US	
	ATSC / DVB-T	On	Feature present
	Alternative Tuner	Philips	Tuner brand
	Tuner Type	TD1336S / TD 1331	Tuner type
	AGC amplifier	Other / Sanyo	
	Hotel mode	Off / On	Feature not present / Feature present
	Video playback	On	Feature present
	Connected planet	Off	Feature not present
Option numbers	Group 1		03152 00290 00549 02691 (example, see set sticker)
	Group 2		01070 00000 21152 00000 (example, see set sticker)
	Store		To store the changed option number settings

8.4.4 Option Numbers

Select this sub menu to set all options at once (expressed in two long strings of numbers).
An option number (or "option byte") represents a number of different options. When you change these numbers directly, you can set all options very quickly. All options are controlled via eight option numbers.
When the EAROM is replaced, all options will require resetting. To be certain that the factory settings are reproduced exactly, you must set both option number lines. You can find the correct option numbers on a sticker inside the TV set.

CTN	Options Group 1	Options Group 2	Displ. Code
26PFL5322D/37	03088 00289 00549 02691	01069 00000 21152 00000	045
32PFL5322D/37	03088 00290 00549 02691	01070 00000 21152 00000	046
32PFL7332D/37	03152 00290 00549 02691	01070 00000 21152 00000	046
37PFL5332D/37	03088 00291 00549 02691	01095 00000 21152 00000	071
37PFL7332D/37	03152 00291 00549 02691	01095 00000 21152 00000	071
42PFL5332D/37	03088 00291 00549 02691	01081 00000 21152 00000	057
42PFL7332D/37	03152 00291 00549 02691	01081 00000 21152 00000	057

Group 1 indicates hardware options 1 to 4, Group 2 indicates software options 5 to 8.
Every 5-digit number represents 16 bits (so the maximum value will be 65536 if all options are set).
When all the correct options are set, the sum of the decimal values of each Option Byte (OB) will give the option number.

Table 8-5 Option code overview

Byte	Bit (dec. value)	Subject	Options	Settings (in decimal values)	Remarks
1	0 (1)	Video Repro	Picture Processing	0= No Spider, 1= Spider	Spider availability, influences, digital options.
	1 (2)				
	2 (4)				
	3 (8)		Comb Filter	0= None, 8= 2D Comb (Columbus without DRAM), 16= 3D Comb (Columbus with DRAM)	
	4 (16)				
	5 (32)		Ambient Light	0= None, 32=Ambi-light Stereo, 64= Ambi-light Mono	
	6 (64)				
	7 (128)				
	8 (256)		Dual Screen	0= None, 256= One Tuner DS, 512= Two Tuner DS	
	9 (512)				
	10 (1024)		MOP	0= Off, 1024= On	Matrix Output Processor (or EBILD)
	11 (2048)		JOP	0= Off, 2048= On	Jaguar Output Processor (or EBILD) Reserved for future use
	12 (4096)		POD	0= Off, 4096= On	
	13 (8192)		n.a.		
	14 (16384)		n.a.		
	15 (32768)		n.a.		
2	0 (1)	Sound Repro	Acoustic System (Cabinet)	0= None, 1= Entry_ ME5_5W, 2= Entry_ME5_15W, 3= (Soft)Wrap, 4= Top, 5= Entry+, 6= Eco ME5 5W, 7= Eco ME5 15W, 8= ECo ME6 9= Top-A 2K6, 10= Step Top -B Open 2K6, 11= ME6 2K6, 12= 51 WMAG, 13= 51 PHIL, 14= 60 PHIL, 15= MG Eco Slim	Cabinet design, used for setting dynamic audio parameters.
	1 (2)				
	2 (4)				
	3 (8)				
	4 (16)		Aux Headphone Sound	0= Off, 16= On	Dual AC3 sound in Aux available.
	5 (32)		n.a.		
	6 (64)		n.a.		
	7 (128)		n.a.		
	8 (256)		n.a.		
	9 (512)		Sub woofer Internal	0= Not Present, 512= Present	
	10 (1024)		Centre Mode Support	0= Not Supported, 1024= Supported	
	11 (2048)		n.a.		
	12 (4096)		n.a.		
	13 (8192)		n.a.		
	14 (16384)		n.a.		
	15 (32768)		n.a.		
3	0 (1)	Source Select	HDMI1	0= None, 1= With analog audio, 2= Without analog audio	
	1 (2)				
	2 (4)		HDMI2	0= None, 4= With analog audio, 8= Without analog audio	
	3 (8)				
	4 (16)		n.a.		
	5 (32)		USB Version	0= None, 32= USB 1.1, 64= USB 2.0 + Card reader	USB support.
	6 (64)				
	7 (128)		IEEE1394	0= Not Present, 128= Present	
	8 (256)		Ethernet	0= LAN not present, 256= LAN present	
	9 (512)		RRT	0= Off, 512= On	Regional Rating Table (RRT)
	10 (1024)		S/PDIF Inputs	0= None, 1024= 1 Connector, 2048= 2 Connectors	
	11 (2048)				
	12 (4096)		LCOS I/O	0= Not Present, 4096= Present	
	13 (8192)		n.a.		
	14 (16384)		n.a.		
	15 (32768)		n.a.		
4	0 (1)	Region	Region	0= EU, 1= AP-P, 2= AP-N, 3= US, 4= Latam	
	1 (2)				
	2 (4)				
	3 (8)	Interconnect	China IF	0= Off, 8= On	
	4 (16)		Alternative Tuner	0= Philips, 16= Alps	Tuner make.
	5 (32)		Tuner Type	0= TD1336s (B-Chassis US), 32= TD1331(J-Chassis US), 64= UV1318 (Analogue EU), 96= TD1316 (Hybrid EU)	Tuner type (B-chassis US is e.g "BP2.3U").
	6 (64)				
	7 (128)	Source Select	AGC Amp.	0= NEC IF Amp, 128= Sanyo IF Amp.	Pos.: 7T13 of B02B schematic
	8 (256)		AV1	0= CVBS/RGB, 256= CVBS/YC/LR, 512= CVBS/YC/YPbPr/HV/LR	Input type.
	9 (512)				
	10 (1024)		AV2	0= CVBS/YC/RGB/P50, 1024= CVBS/YC/LR	Input type.
	11 (2048)				
	12 (4096)		AV3	0= Not Available, 4096= CVBS, 8192= YPbPr	Input type.
	13 (8192)				
	14 (16384)		AV4	0= Not Available, 16384= YPbPr	Input type.
	15 (32768)				

Byte	Bit (dec. value)	Subject	Options	Settings (in decimal values)	Remarks
5	0 (1)	Display	Screen	See table “Display code overview” in chapter “Service Modes” for the values.	Screen size, type, and resolution.
	1 (2)				
	2 (4)				
	3 (8)				
	4 (16)				
	5 (32)				
	6 (64)				
	7 (128)				
	8 (256)		n.a.		
	9 (512)		PDP contrast reduction	0= Off, 512= On	To reduce the contrast of the PDP for a still picture after a certain time
	10 (1024)		Dimming Backlight	0= Off, 1024= On	
	11 (2048)		Scanning Backlight	0= Off, 2048= On	Option for Scanning Backlight, which is only applicable for Clear LCD
	12 (4096)		n.a.		
	13 (8192)		n.a.		
	14 (16384)		n.a.		
	15 (32768)		n.a.		
6	0 (1)	Miscellaneous	n.a.		Reserved for future use
	1 (2)		n.a.		
	2 (4)		n.a.		Reserved for future use
	3 (8)		n.a.		
	4 (16)		n.a.		
	5 (32)		n.a.		
	6 (64)		Proximity Sensor	0= Off, 64= On	
	7 (128)		n.a.		
	8 (256)		n.a.		
	9 (512)		n.a.		
	10 (1024)		n.a.		
	11 (2048)		n.a.		
	12 (4096)		n.a.		
	13 (8192)		n.a.		
	14 (16384)		n.a.		
	15 (32768)		n.a.		
7	0 (1)	Personal	Self Learning TV	0= Off, 1= On	Reserved for future use
	1 (2)		Auto Store Mode	0= None, 2= PDC/VPS, 4= TXT Page, 6= PDC/VPS/TXT Page	Fixed to: "None" in the AP-N and US versions.
	2 (4)				
	3 (8)		2CS Korea	0= Off, 8= On, 16= Auto	
	4 (16)				
	5 (32)		Picture Mute	0= Off, 32= On	
	6 (64)		n.a.		
	7 (128)		Virgin Mode	0= Off, 128= On	
	8 (256)		Hotel Mode	0= Off, 256= On	
	9 (512)		Content Browser	0= Not Present, 512= Present	
	10 (1024)		Connected Planet	0= Off, 1024= Full Connected Planet + logo support	
	11 (2048)				
	12 (4096)		ATSC/DVB	0= DVB, 4096= ATSC	
	13 (8192)				
	14 (16384)		EPG	0= Off, 16384= On	Applicable to Europe
	15 (32768)		Gemstar	0= Off, 32768= On	Applicable to NAFTA
8	0 (1)	n.a.	n.a.		
	1 (2)	n.a.	n.a.		
	2 (4)	n.a.	n.a.		
	3 (8)	n.a.	n.a.		
	4 (16)	n.a.	n.a.		
	5 (32)	n.a.	n.a.		
	6 (64)	n.a.	n.a.		
	7 (128)	n.a.	n.a.		
	8 (256)	n.a.	n.a.		
	9 (512)	n.a.	n.a.		
	10 (1024)	n.a.	n.a.		
	11 (2048)	n.a.	n.a.		
	12 (4096)	n.a.	n.a.		
	13 (8192)	n.a.	n.a.		
	14 (16384)	n.a.	n.a.		
	15 (32768)	n.a.	n.a.		

9. Circuit Descriptions, Abbreviation List, and IC Data Sheets

Index of this chapter:

9.1 Introduction
9.2 Abbreviation List
9.3 IC Data Sheets

Notes:

- Only new circuits (circuits that are not published recently) are described. For other descriptions see the EL1.1U manual (3122 785 1629x, where x can be 0 to 9 depending on the manual version).
- Figures can deviate slightly from the actual situation, due to different set executions.
- For a good understanding of the following circuit descriptions, please use the wiring, block (chapter 6) and circuit diagrams (chapter 7). Where necessary, you will find a separate drawing for clarification.

9.1 Introduction

This chassis is specifically developed for ATSC reception without CableCARD™, and is in fact derived from the EL1.1U chassis. The key components are:

- MPIF (PNX3000).
- AVIP/COLUMBUS (PNX2015).
- VIPER 2 (PNX8550).

The differences with respect to the EL1.1U chassis are:

- Two HDMI connectors (i.o. one).
- The presence of the AmbiLight Interconnection Board.

9.1.1 Features

The main features for this chassis are:

- The move from the analog world to the digital world. W.o.w. from signal processing via "hardware circuits" to signal processing via "software algorithms". This means: no software = no picture and sound!
- Fit for both analog and digital signal processing, this by converting analog signals into digital transport streams and allowing seamless zapping between all possible signal sources. This makes the chassis applicable for e.g. receiving ATSC in an integrated product form.
- The internal digital processing allows new "Multi-Media" applications such as Content Browser, Memory Card Slot, Local Area Network support and all kinds of streaming applications.
- The chassis can be upgraded in the future with internal functionality such as Personal Video Recording, DVD/RW.

9.1.2 Chassis Block Diagram

Description below refers to the block diagrams in chapter 6 “Block Diagrams, Test Point Overview, and Waveforms”.

Analog Reception

The TV receives multimedia information by tuning the Hybrid tuner (for analog and digital reception) to one of many 6 MHz input channels available via a cable connection. When the input channel is an analog channel, the signal is processed via the NTSC decoder and the VBI data decoder of the MPIF.

Digital Reception

The TV receives multimedia information by tuning to one of many 6 MHz input channels available via a cable connection. When the input channel is a digital channel, it is processed via the QAM demodulator and then passed to the multi-media processor (VIPER), which handles the synchronization and display of audio-visual material.

Signal Processing

The AVIP together with the MPIF device is used to perform the input decoding of a single stream of analog audio and video broadcast signals. In addition, the AVIP is used for decoding and presentation of audio output streams. The main data connection between MPIF and AVIP is done via an I^2D bus. The AVIP converts the incoming video data to ITU-656 format for communication to the VIPER IC.
The audio data is transferred between the AVIP and VIPER using I^2S.
The AVIP IC is controlled by the VIPER via the I^2C bus.
The key part in the system, the VIPER, performs almost all key features, like video quality enhancement, motion compensation, picture-in-picture processing, and others. It is a completely digital IC with a TriMedia DSP (Digital Signal Processor) core and a MIPS microcontroller core. The DSP and some additional cores are used to do the video feature processing and some auxiliary sound feature processing. The MIPS microcontroller core is used for all internal and external controlling tasks including a system wide I^2C bus.
The VIPER provides a primary digital (YUV or RGB) output to the LVDS transmitter.

AmbiLight Interconnection Board

For further picture enhancement the chassis is equipped with a so called AmbiLight Interconnect Board. This board provides:

- Picture enhancement (Pixel Plus) by the Pacific 3.
- AmbiLight control (used in some sets).
- Dimming Backlight control.
- DC/DC conversion: 12 Volt AmbiLight 15 Volt for AmbiLight Module supply.

Note: In case no AmbiLight units are installed, no separate power supply lines are needed for this board. In that case power is supplied from the Small Signal Board via the LVDS cable.

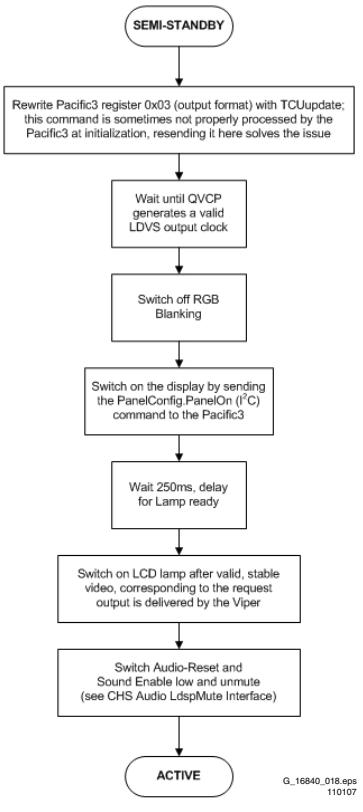

Figure 9-1 AmbiLight interconnect board timing diagram

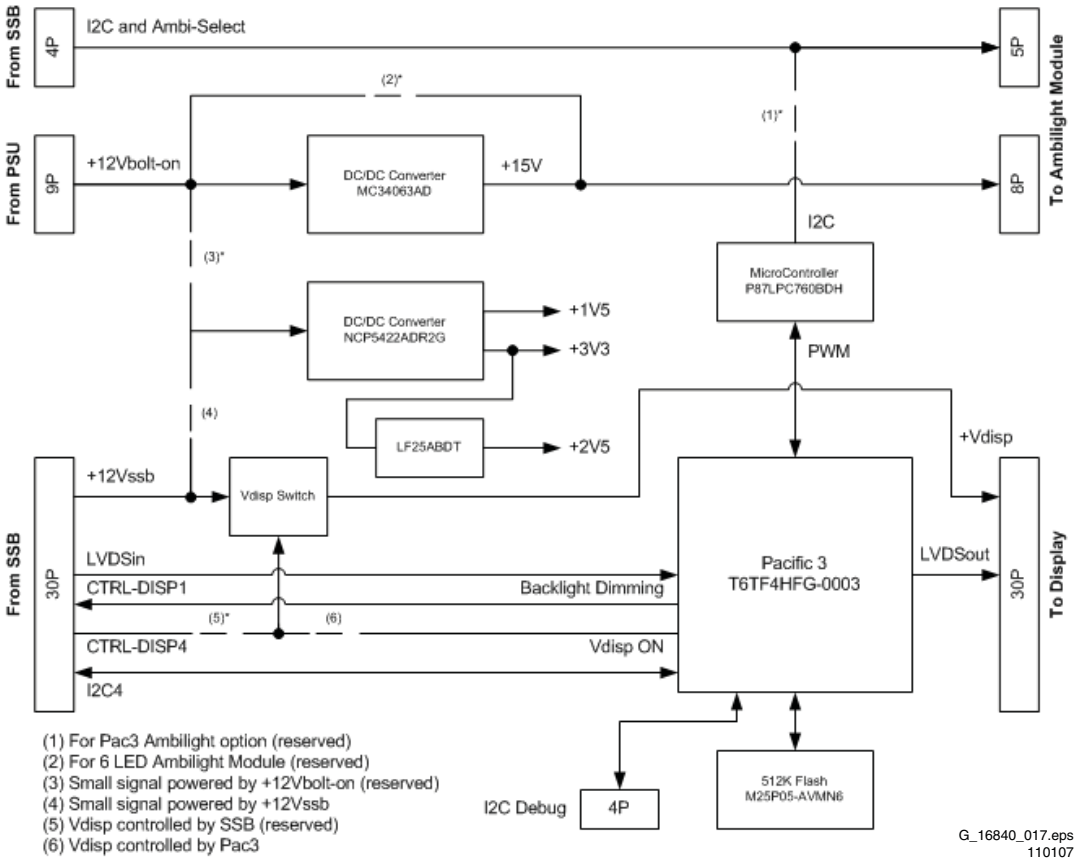

Figure 9-2 Block diagram AmbiLight interconnect board

B O 4 G VIPER/PNX 2015 : Display Interface

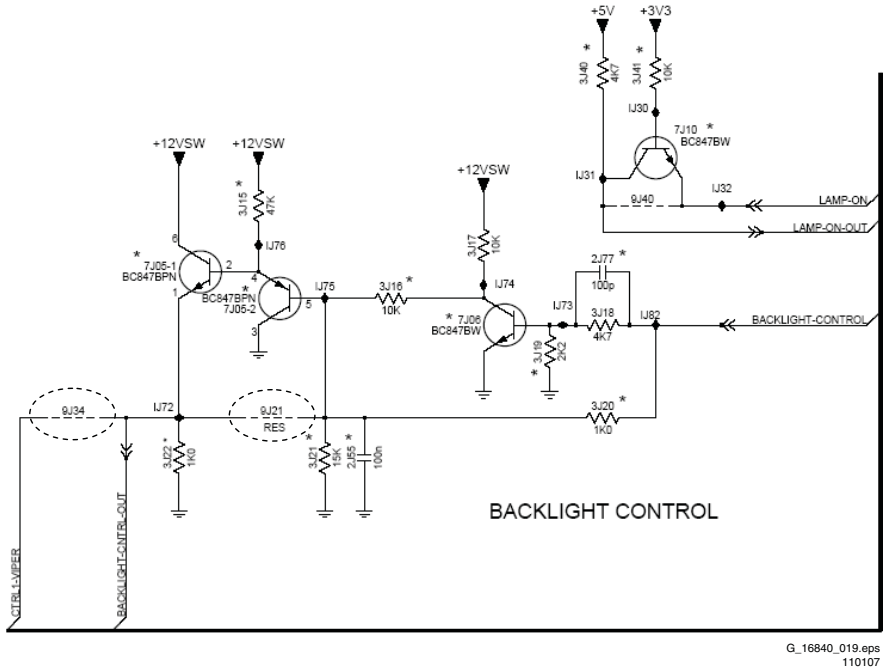

Figure 9-3 Backlight dimming jumper settings

SSB Cell Layout

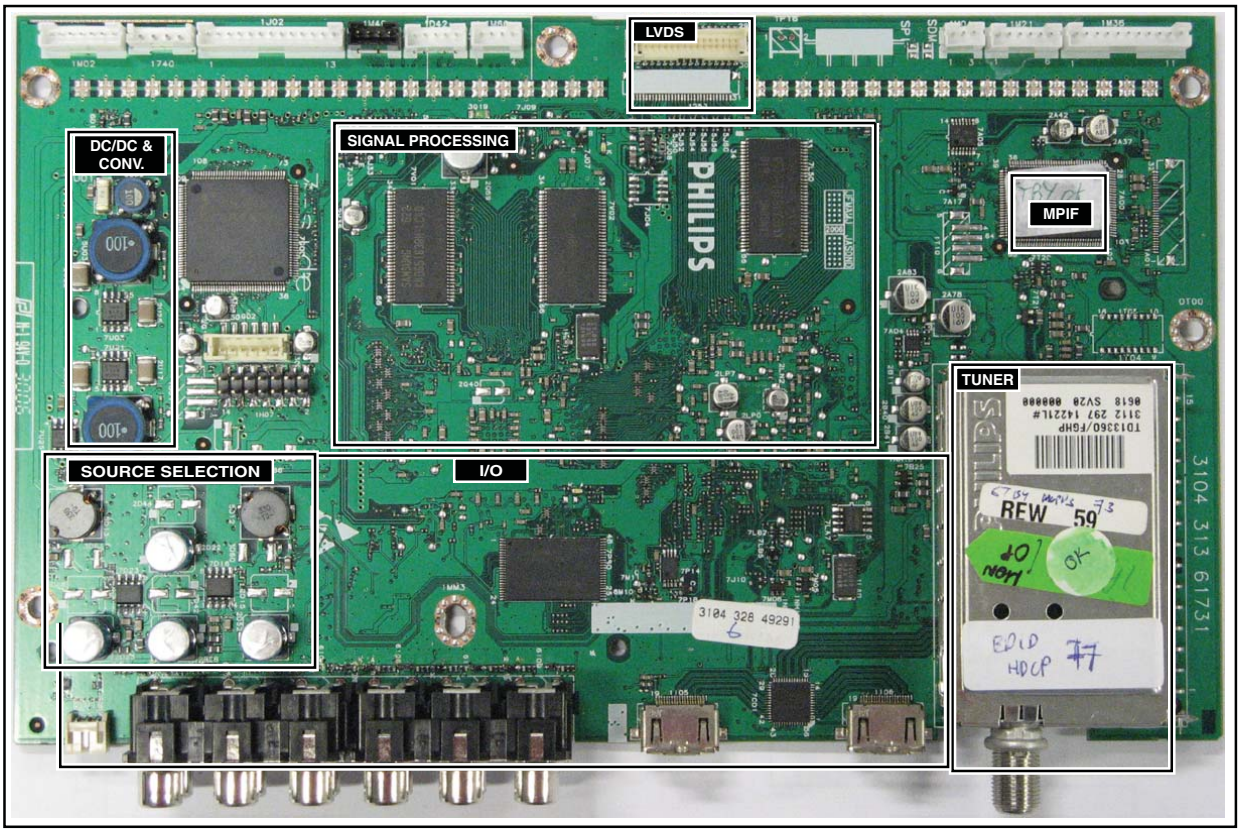

G_16840_015.eps
010207

Figure 9-4 SSB top view

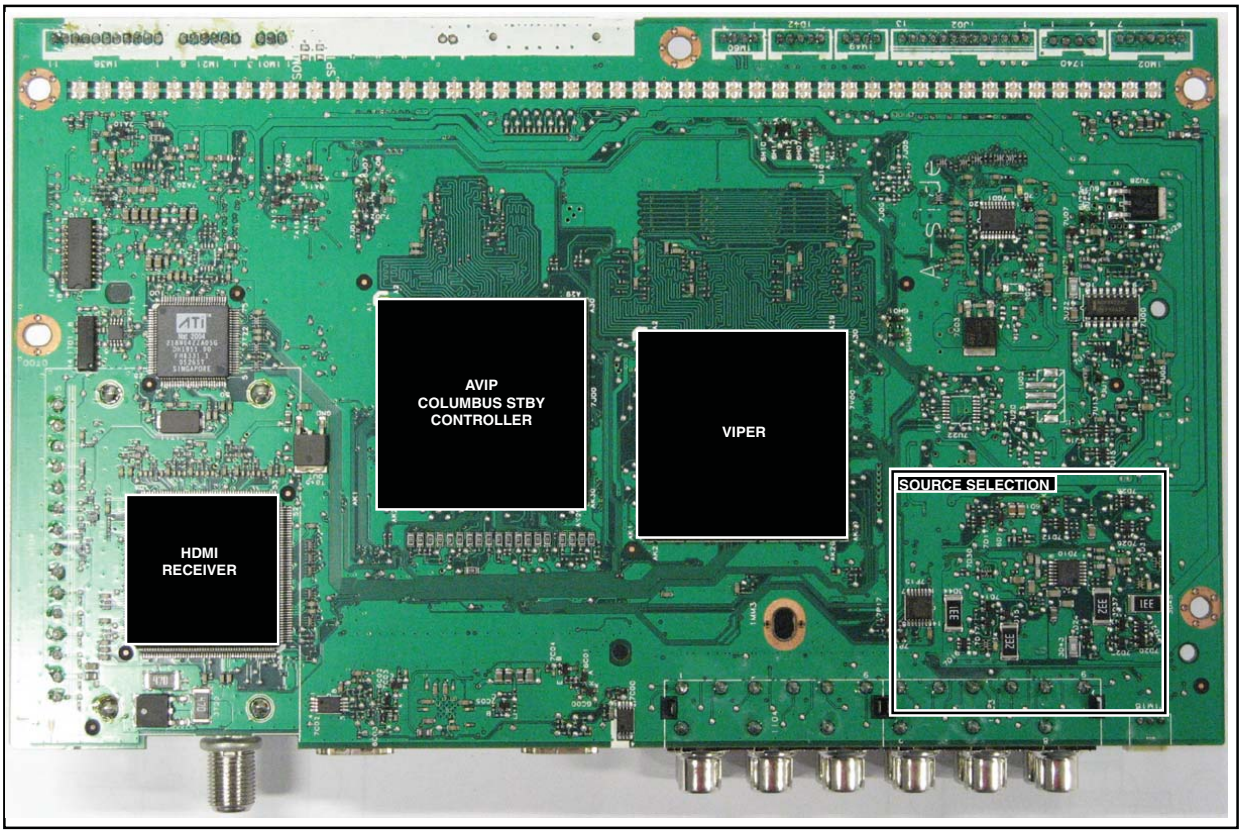

G_16840_016.eps
010207

Figure 9-5 SSB bottom view

9.2 Abbreviation List

AARA	Automatic Aspect Ratio Adaptation: algorithm that adapts aspect ratio to remove horizontal black bars; keeps the original aspect ratio
ACI	Automatic Channel Installation: algorithm that installs TV channels directly from a cable network by means of a predefined TXT page
ADC	Analogue to Digital Converter
AFC	Automatic Frequency Control: control signal used to tune to the correct frequency
AGC	Automatic Gain Control: algorithm that controls the video input of the feature box
AM	Amplitude Modulation
AP	Asia Pacific
AR	Aspect Ratio: 4 by 3 or 16 by 9
ATSC	Advanced Television Systems Committee, the digital TV standard in the USA
ATV	See Auto TV
Auto TV	A hardware and software control system that measures picture content, and adapts image parameters in a dynamic way
AV	External Audio Video
AVIP	Audio Video Input Processor
B/G	Monochrome TV system. Sound carrier distance is 5.5 MHz
BTSC	Broadcast Television Standard Committee. Multiplex FM stereo sound system, originating from the USA and used e.g. in LATAM and AP-NTSC countries
C	Centre channel (audio)
CA(M)	Conditional Access (Module)
CEC	Consumer Electronics Control bus: remote control bus on HDMI connections
CIS	Card Information Structure: Protocol which identifies the card in a POD module
CL	Constant Level: audio output to connect with an external amplifier
ComPair	Computer aided rePair
CP	Connected Planet / Copy Protection
CSM	Customer Service Mode
CTI	Color Transient Improvement: manipulates steepness of chroma transients
CVBS	Composite Video Blanking and Synchronization
DAC	Digital to Analogue Converter
DBE	Dynamic Bass Enhancement: extra low frequency amplification
DDC	See "E-DDC"
D/K	Monochrome TV system. Sound carrier distance is 6.5 MHz
DFU	Directions For Use: owner's manual
DMR	Digital Media Reader: card reader
DRAM	Dynamic RAM
DRM	Digital Rights Management
DSP	Digital Signal Processing
DTCP	Digital Transmission Content Protection; A protocol for protecting digital audio/video content that is traversing a high speed serial bus, such as IEEE-1394
DVI(-d)	Digital Visual Interface (d= digital only)
EAS	Emergency Alert Signalling; A cable TV standard (SCTE18) to signal emergency information to digital terminal devices
ECM	Entitlement Control Message
E-DDC	Enhanced Display Data Channel (VESA standard for communication channel and display). Using E-DDC, the video source can read the EDID information form the display.
EDID	Extended Display Identification Data (VESA standard)
EEPROM	Electrically Erasable and Programmable Read Only Memory
EMI	Electro Magnetic Interference
EMM	Entitlement Management Message
EPLD	Erasable Programmable Logic Device
EU	Europe
EXT	EXTernal (source), entering the set by SCART or by cinches (jacks)
FAT	Forward Application Transport channel
FBL	Fast BLanking: DC signal accompanying RGB signals
FDS	Full Dual Screen (same as FDW)
FDW	Full Dual Window (same as FDS)
FLASH	FLASH memory
FM	Field Memory or Frequency Modulation
FPGA	Field-Programmable Gate Array
FTV	Flat TeleVision
Gb/s	Giga bits per second
H	H_sync to the module
HD	High Definition
HDD	Hard Disk Drive
HDCP	High-bandwidth Digital Content Protection: A "key" encoded into the HDMI/DVI signal that prevents video data piracy. If a source is HDCP coded and connected via HDMI/DVI without the proper HDCP decoding, the picture is put into a "snow vision" mode or changed to a low resolution. For normal content distribution the source and the display device must be enabled for HDCP "software key" decoding.
HDMI	High Definition Multimedia Interface
HP	HeadPhone
I	Monochrome TV system. Sound carrier distance is 6.0 MHz
I^2C	Inter IC bus (also called IIC)
I^2D	Inter IC Data bus; high speed data link with a data transmission rate of 594 Mb/s
I^2S	Inter IC Sound bus
IB	In Band channel
IF	Intermediate Frequency
IR	Infra Red
IRQ	Interrupt Request
ITU-656	The ITU Radio communication Sector (ITU-R) is a standards body subcommittee of the International Telecommunication Union relating to radio communication. ITU-656 (a.k.a. SDI), is a digitized video format used for broadcast grade video. Uncompressed digital component or digital composite signals can be used. The SDI signal is self-synchronizing, uses 8 bit or 10 bit data words, and has a maximum data rate of 270 Mbit/s, with a minimum bandwidth of 135 MHz.
ITV	Institutional TeleVision; TV sets for hotels, hospitals etc.
JOP	Jaguar Output Processor

LS	Last Status; The settings last chosen by the customer and read and stored in RAM or in the NVM. They are called at start-up of the set to configure it according to the customer's preferences
LATAM	Latin America
LCD	Liquid Crystal Display
LED	Light Emitting Diode
L/L'	Monochrome TV system. Sound carrier distance is 6.5 MHz. L' is Band I, L is all bands except for Band I
LPL	LG.Philips LCD (supplier)
LS	Loudspeaker
LVDS	Low Voltage Differential Signalling
Mbps	Mega bits per second
M/N	Monochrome TV system. Sound carrier distance is 4.5 MHz
MOP	Matrix Output Processor
MOSFET	Metal Oxide Silicon Field Effect Transistor, switching device
MPEG	Motion Pictures Experts Group
MPIF	Multi Platform InterFace
NC	Not Connected
NTC	Negative Temperature Coefficient, non-linear resistor
NTSC	National Television Standard Committee. Color system mainly used in North America and Japan. Color carrier NTSC M/N= 3.579545 MHz, NTSC 4.43= 4.433619 MHz (this is a VCR norm, it is not transmitted off-air)
NVM	Non-Volatile Memory: IC containing TV related data such as alignments
O/C	Open Circuit
OOB	Out Of Band channel
OSD	On Screen Display
PAL	Phase Alternating Line. Color system mainly used in West Europe (color carrier= 4.433619 MHz) and South America (color carrier PAL M= 3.575612 MHz and PAL N= 3.582056 MHz)
PCB	Printed Circuit Board (same as "PWB")
PCM	Pulse Code Modulation
PCMCIA	Personal Computer Memory Card International Association
PDP	Plasma Display Panel
PIP	Picture In Picture
PLL	Phase Locked Loop. Used for e.g. FST tuning systems. The customer can give directly the desired frequency
POD	Point Of Deployment: A removable CAM module, implementing the CA system for a host (e.g. a TV-set)
POR	Power On Reset, signal to reset the uP
PSIP	Program and System Information Protocol: A standard for (broadcast) digital television. PSIP consists of channel mapping data, program guide data, information about closed captions and content advisory ratings, and other data related to the current and future programs.
PWB	Printed Wiring Board (same as "PCB")
PWM	Pulse Width Modulation
QAM	Quadrature Amplitude Modulation; modulation method
RAM	Random Access Memory
RGB	Red, Green, and Blue. The primary color signals for TV. By mixing levels of R, G, and B, all colors (Y/C) are reproduced.
RC	Remote Control
RC5 / RC6	Signal protocol from the remote control receiver
ROM	Read Only Memory
RRT	This is one of the PSIP tables received via an ATSC compliant transport stream. In case of the OpenCable compliant transport stream, RRT is received via the out of band SI
SAM	Service Alignment Mode
S/C	Short Circuit
SCL	Serial Clock I^2C
SCL-F	Clock Signal on Fast I^2C bus
SD	Standard Definition
SDA	Serial Data I^2C
SDA-F	Data Signal on Fast I^2C bus
SDI	Serial Digital Interface, see “ITU-656”
SDRAM	Synchronous DRAM
SECAM	Sequence Couleur Avec Memoire. Color system mainly used in France and East Europe. Color carriers= 4.406250 MHz and 4.250000 MHz
SIF	Sound Intermediate Frequency
SMPS	Switched Mode Power Supply
SOG	Sync On Green
SOPS	Self Oscillating Power Supply
S/PDIF	Sony Philips Digital InterFace
SRAM	Static RAM
SSB	Small Signal Board
STBY	Standby
SVGA	800x600 (4:3)
SVHS	Super Video Home System
SW	Software
SXGA	1280x1024
TFT	Thin Film Transistor
TMDS	Transmission Minimized Differential Signalling
uP	Microprocessor
UXGA	1600x1200 (4:3)
V	V-sync to the module
VESA	Video Electronics Standards Association
VGA	640x480 (4:3)
WXGA	1280x768 (15:9)
XGA	1024x768 (4:3)
Y	Luminance signal
Y/C	Luminance (Y) and Chrominance (C) signal
YPbPr	Component video. Luminance and scaled color difference signals (B-Y and R-Y)
YUV	Component video

9.3 IC Data Sheets

This section shows the internal block diagrams and pin configurations of ICs that are drawn as "black boxes" in the electrical diagrams (with the exception of "memory" and "logic" ICs).

9.3.1 Diagram B01A, NCP5422A (IC 7U00)

Block Diagram

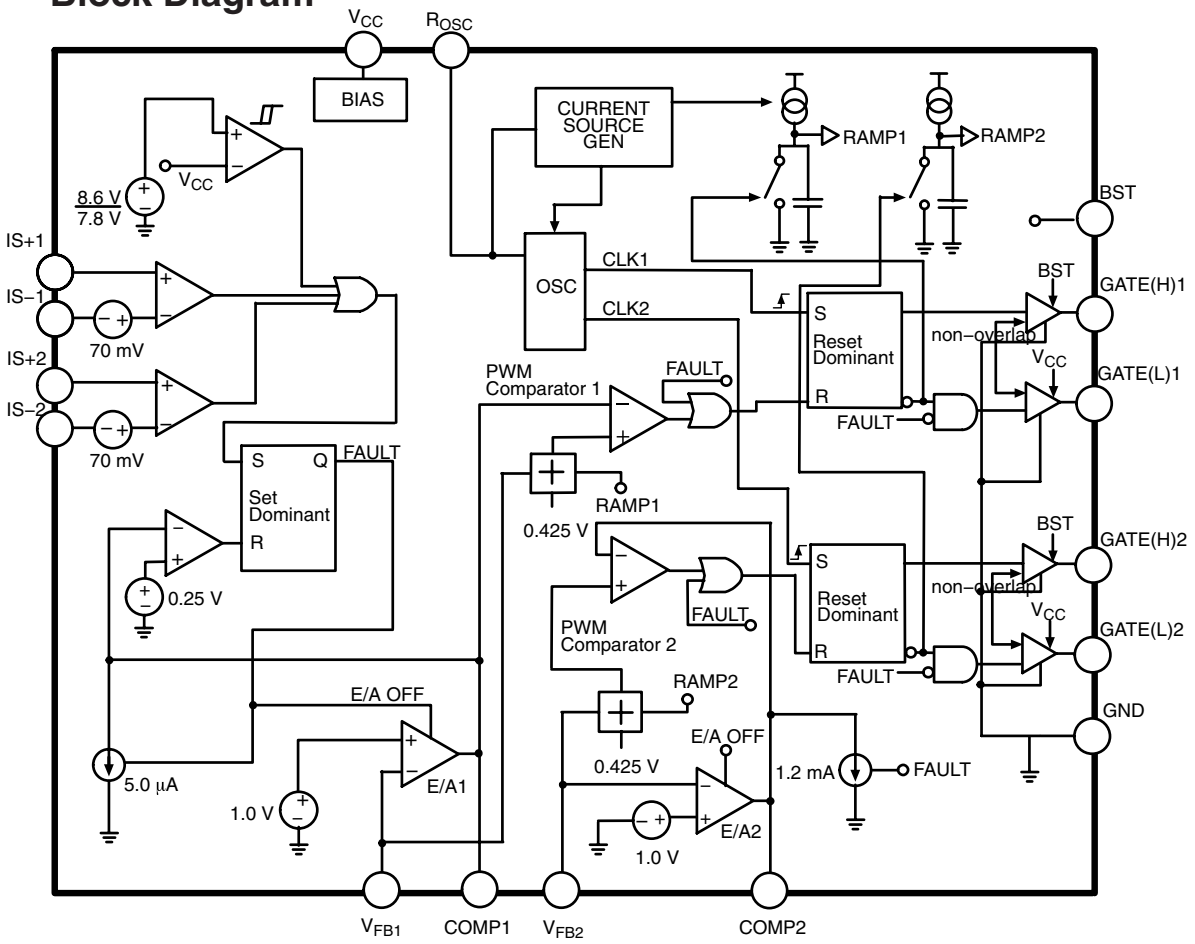

Pin Configuration

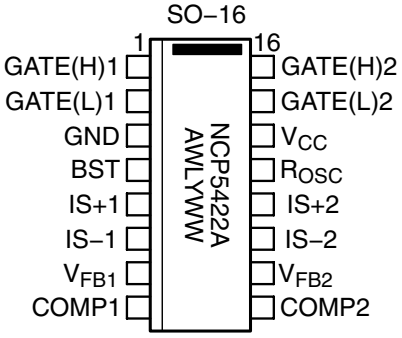

A = Assembly Location
WL = Wafer Lot
Y = Year
WW = Work Week

F_15400_129.eps
240505

Figure 9-6 Internal block diagram and pin configuration

9.3.2 Diagram B02A, NXT2004 (IC 7T22)

Block Diagram

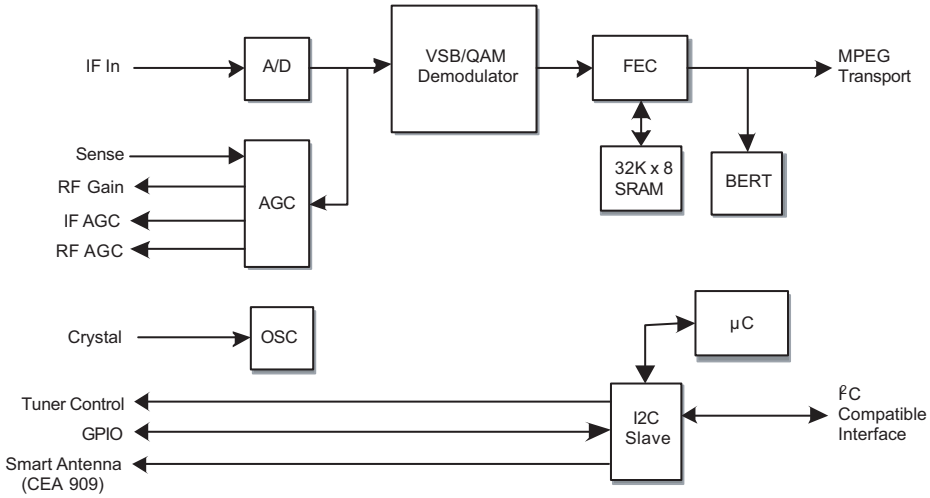

Pin Configuration

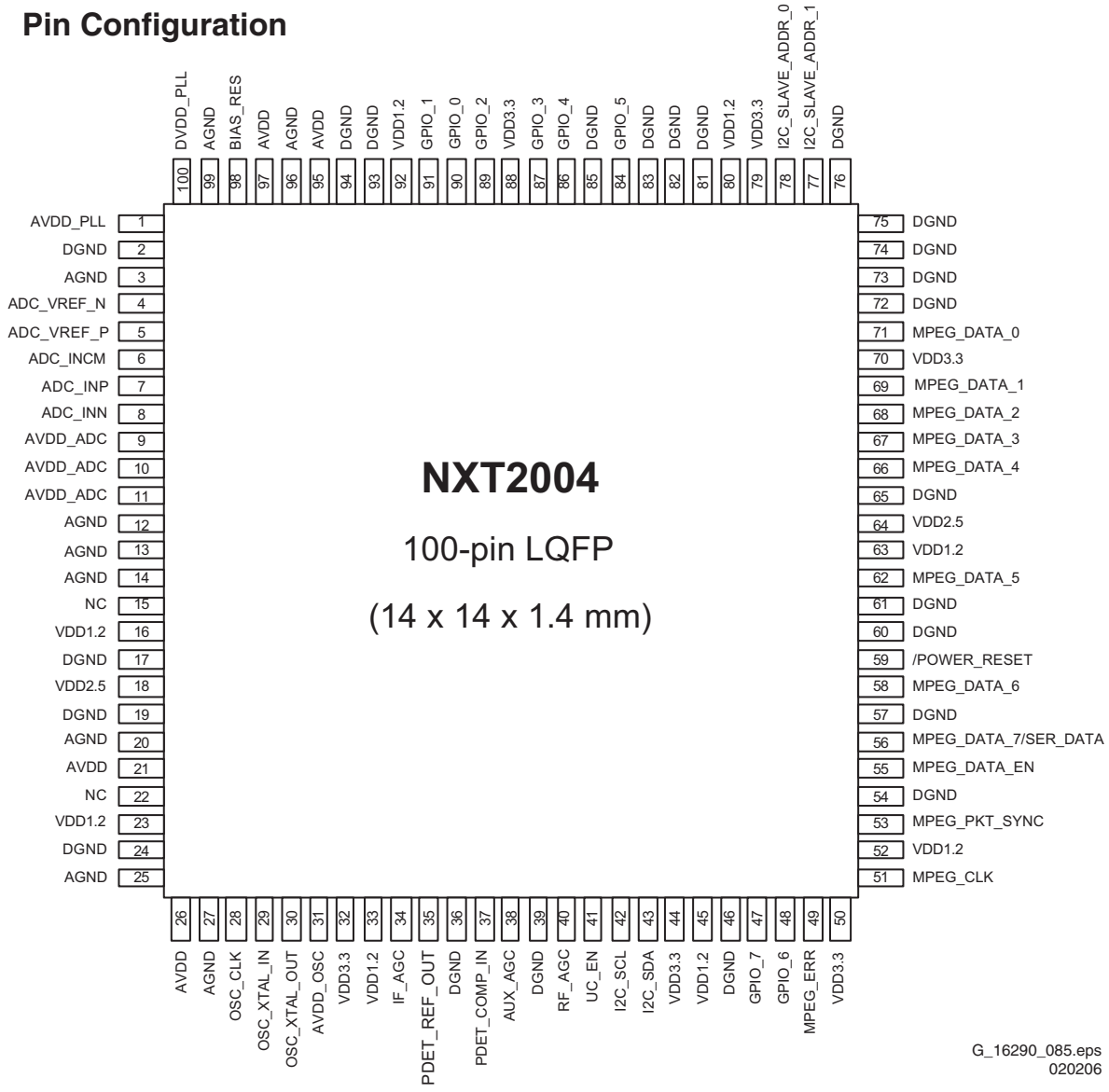

Figure 9-7 Internal block diagram and pin configuration

9.3.3 Diagram B03A/B/C/D, PNCX3000 (IC 7A00)

Block Diagram

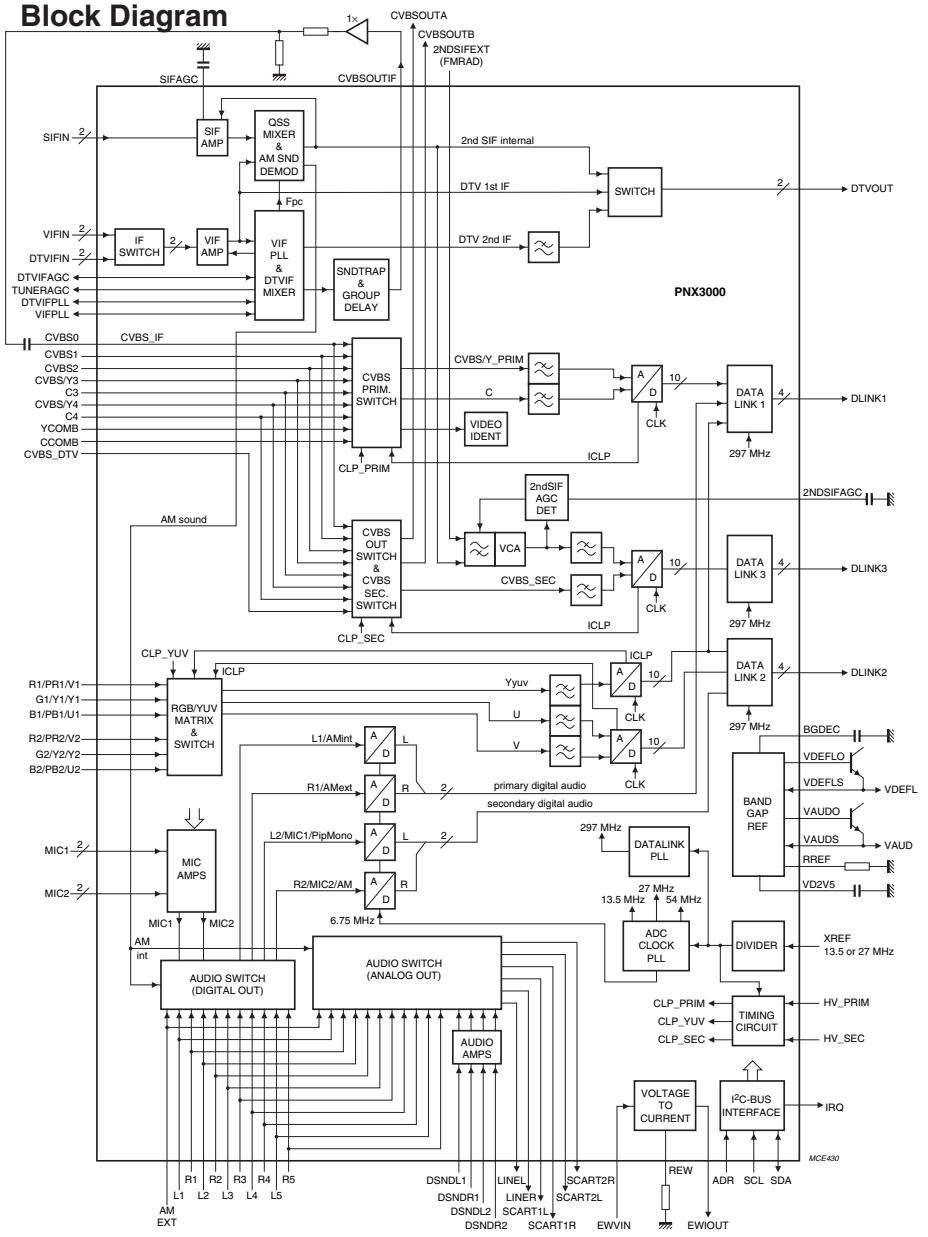

Pin Configuration

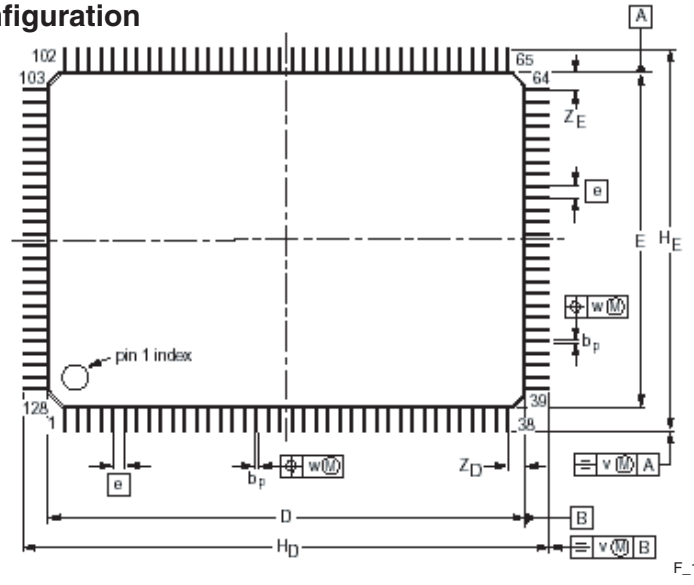

F_15400_131.eps
240505

Figure 9-8 Internal block diagram and pin configuration

9.3.4 Diagram B04A/B/C/D/E/F, PNX2018 (IC 7J00)

Block Diagram

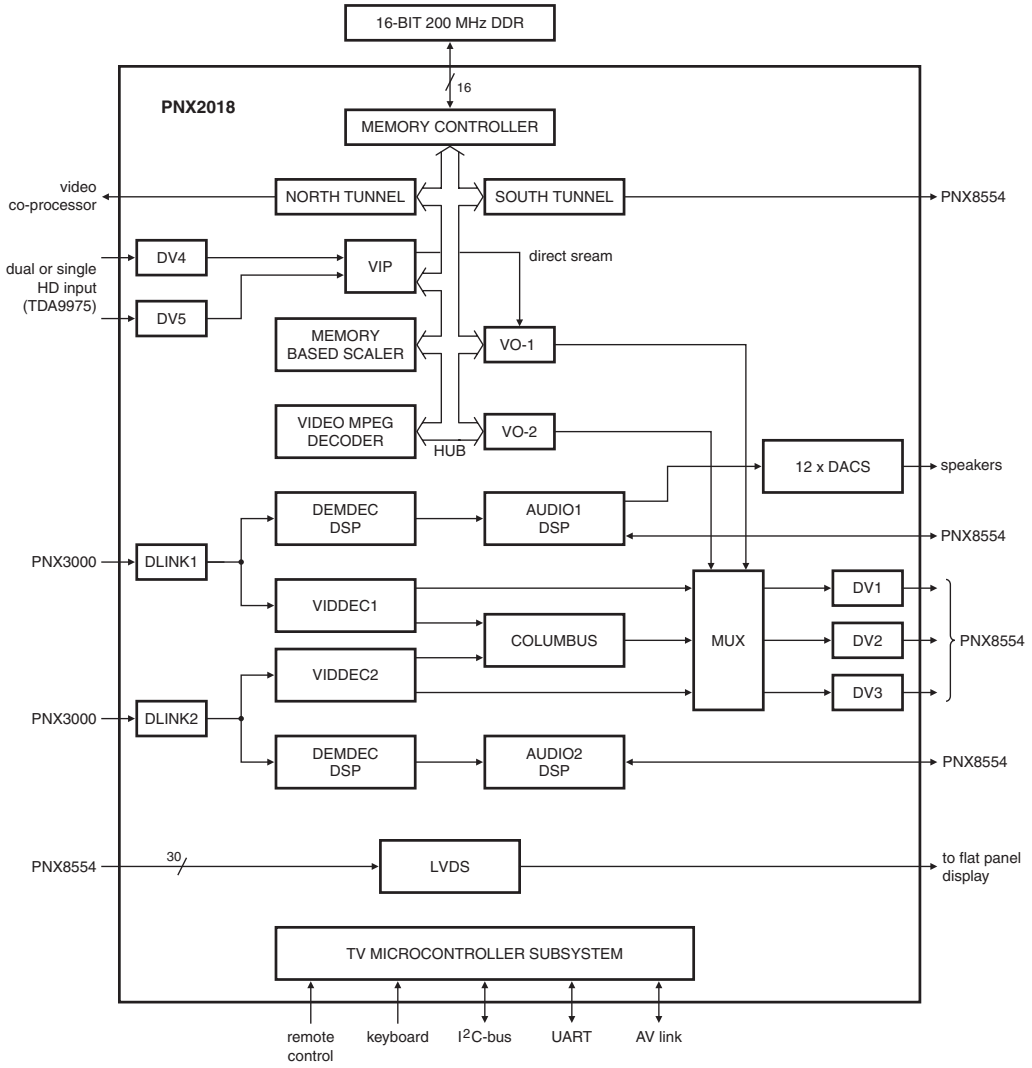

Pin Configuration

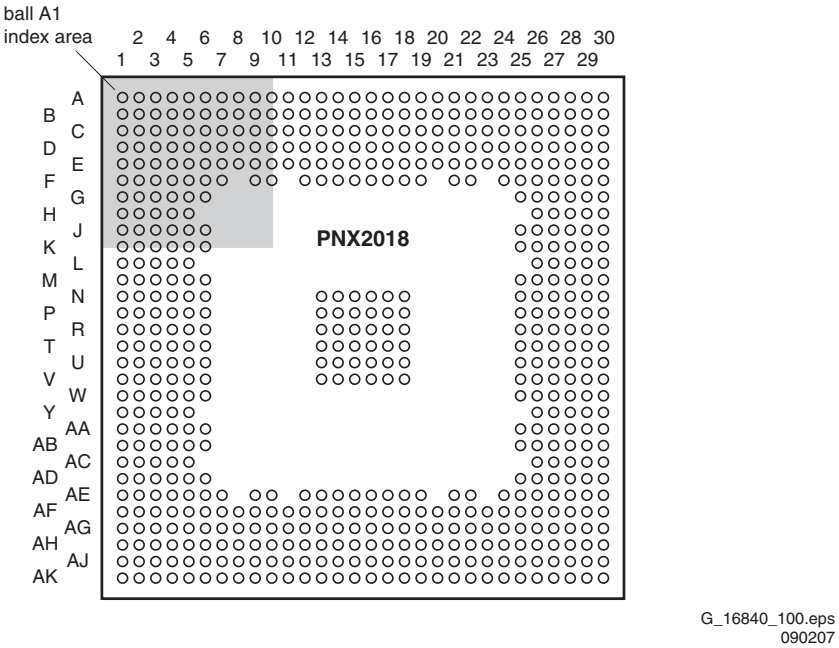

G_16840_100.eps
090207

Figure 9-9 Internal block diagram and pin configuration

9.3.5 Diagram B05A/B/C/D, PNX8552 (IC 7V00)

Block Diagram

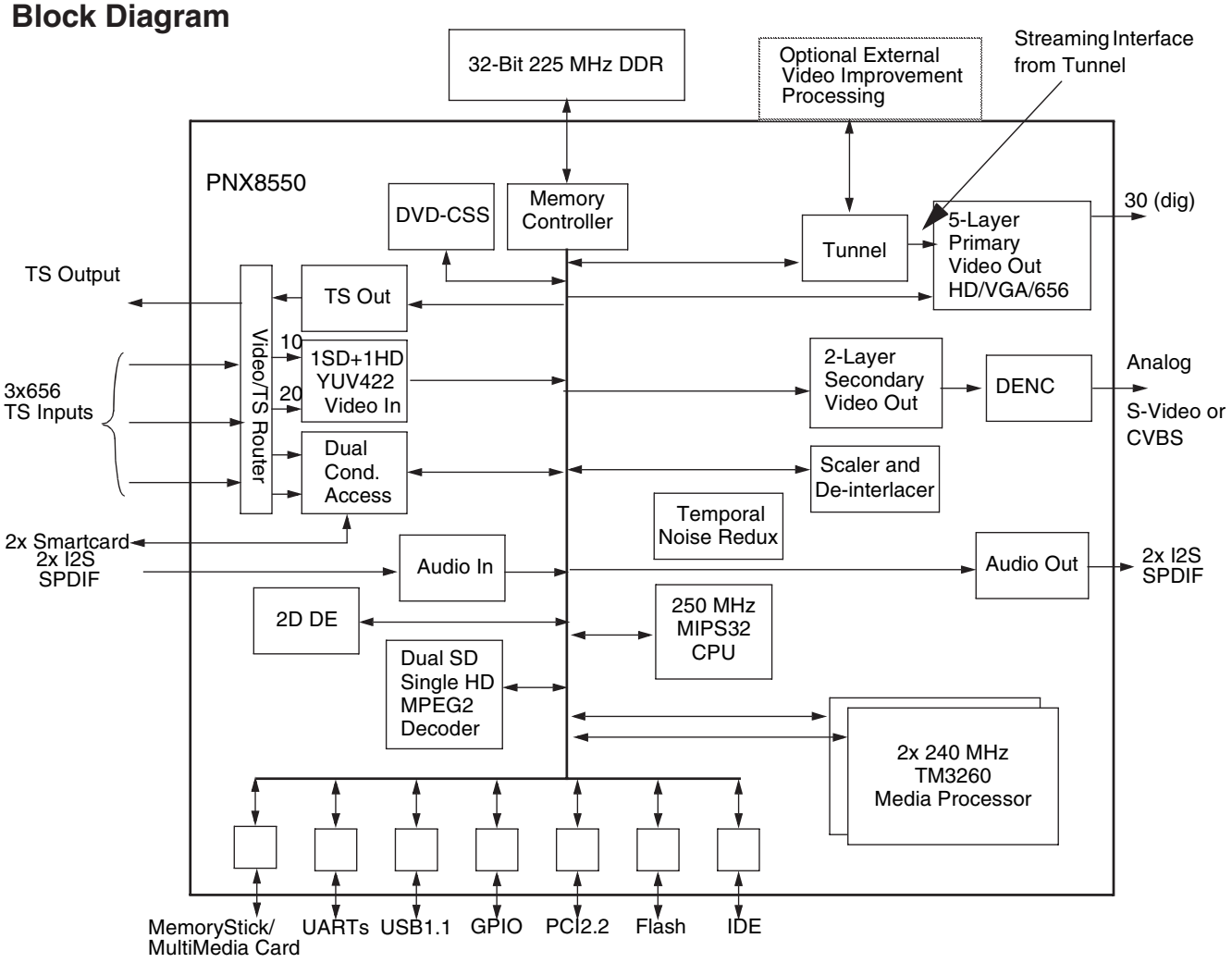

Pin Configuration

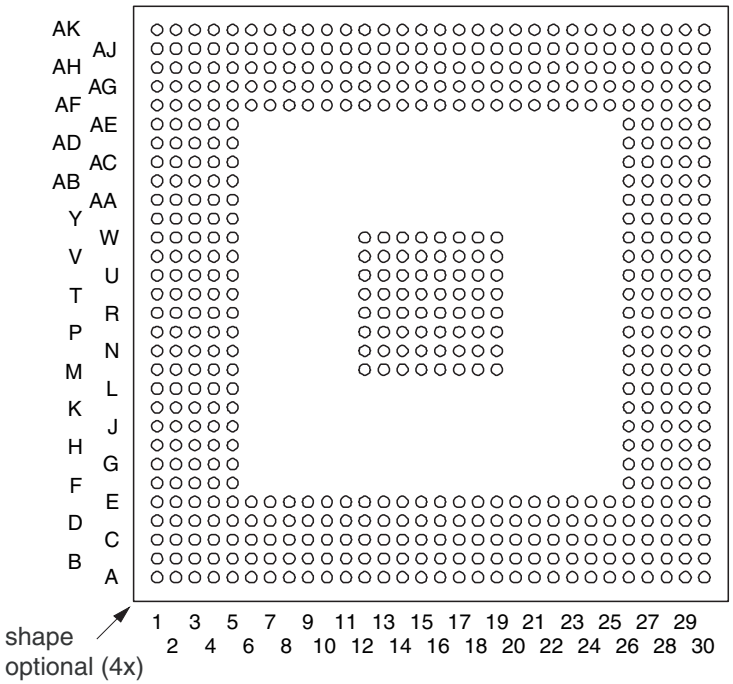

E_14700_088.eps
250505

Figure 9-10 Internal block diagram and pin configuration

9.3.6 Diagram B05F, LD3985M (IC 7M05 & 7M06)

Block Diagram

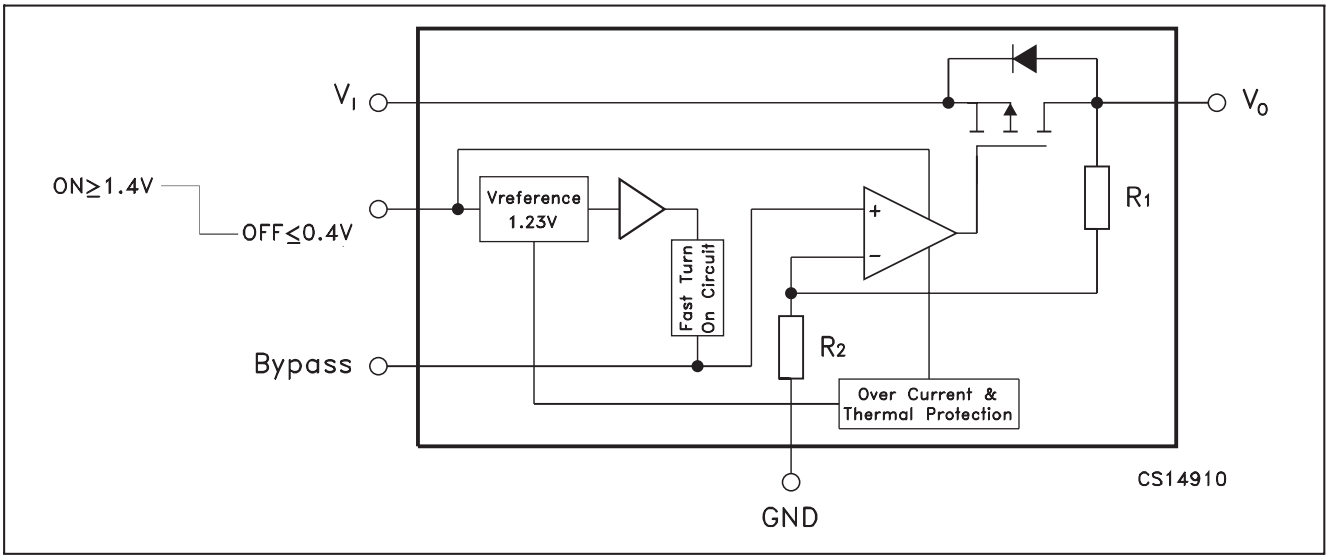

Pin Configuration

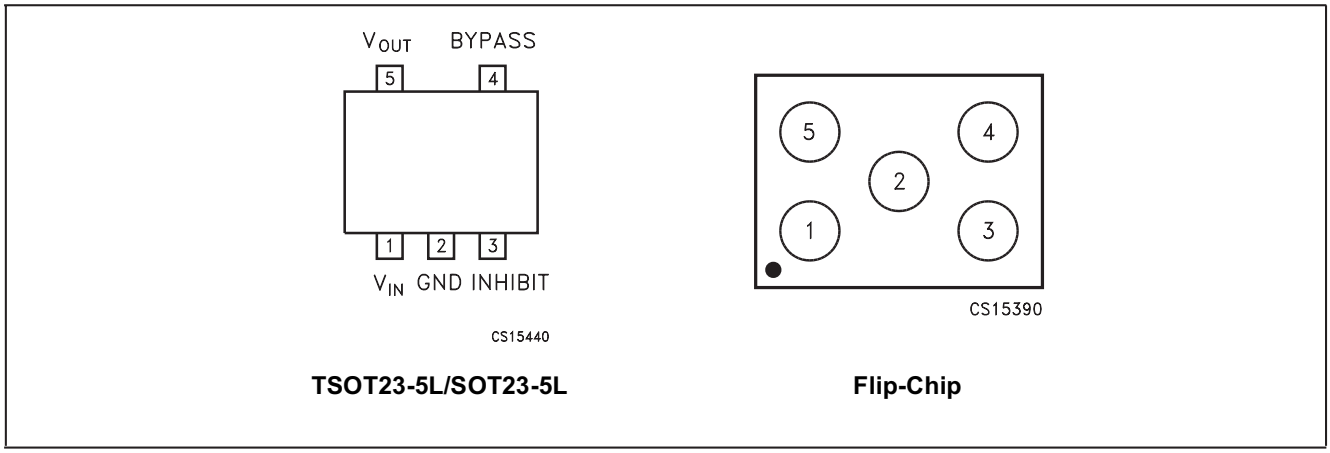

G_16290_084.eps
020206

Figure 9-11 Internal block diagram and pin configuration

9.3.7 Diagram B06, MOP XC3S400 (IC 7G00)

Pin Configuration

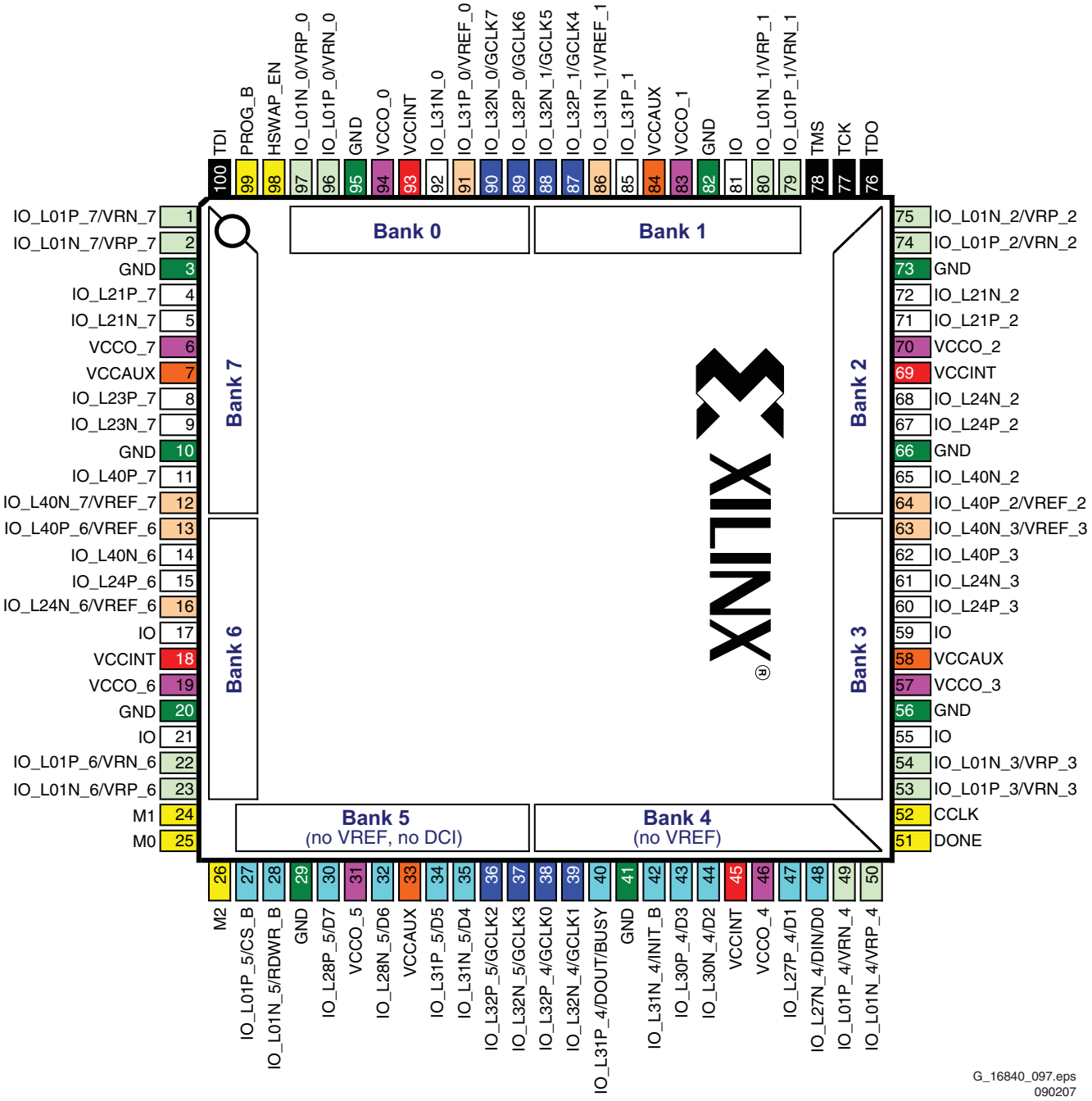

G_16840_097.eps
090207

Figure 9-12 Pin configuration

9.3.8 Diagram B07B, TDA9975HS (IC 7B50)

Block Diagram

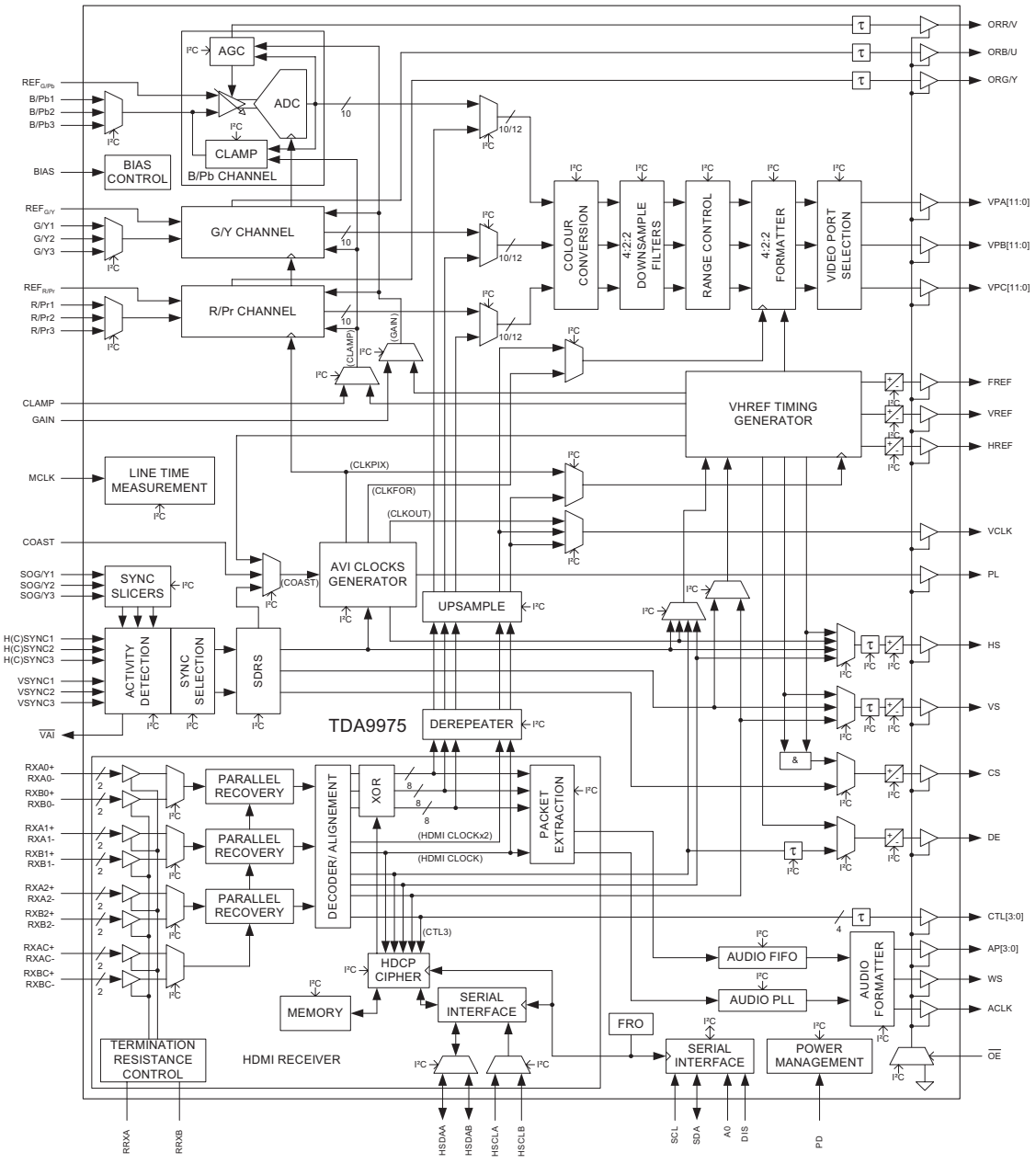

Pin Configuration

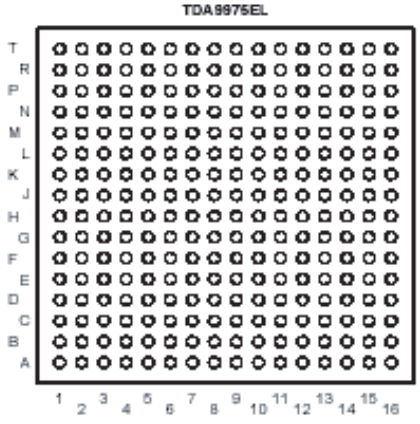

F_15400_135.eps
240505

Figure 9-13 Internal block diagram and pin configuration

9.3.9 Diagram B07E, AD8190ACPZ (IC 7C01)

Block Diagram

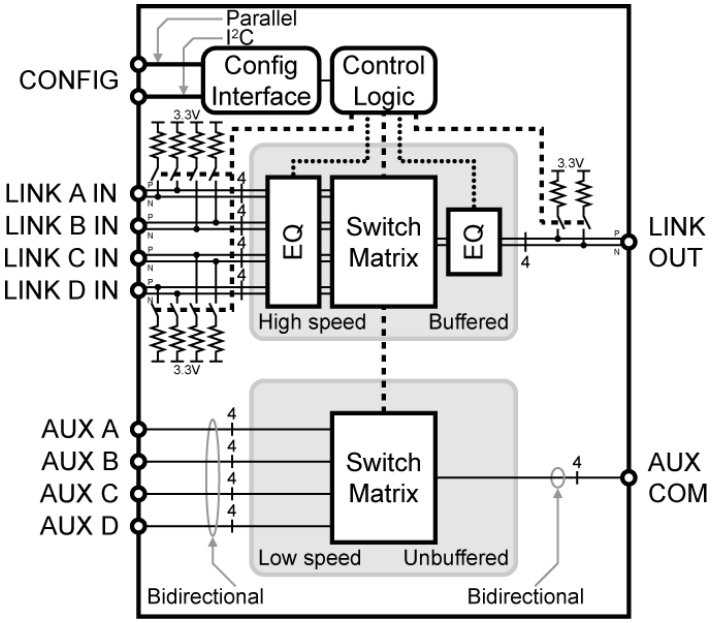

Pin Configuration

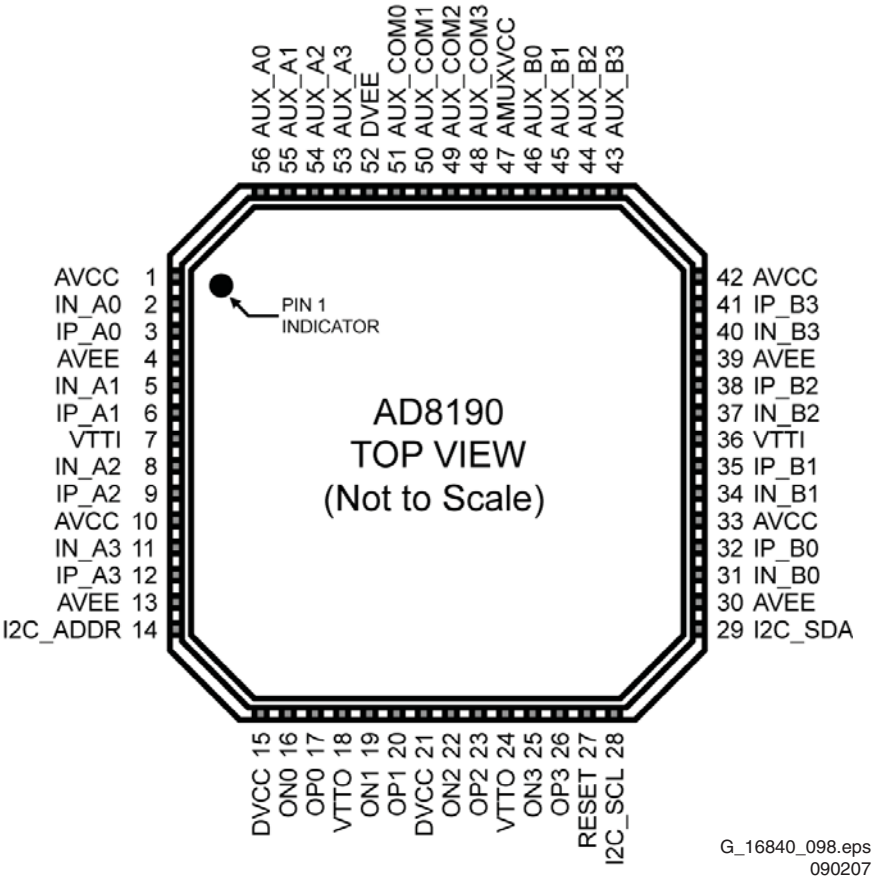

Figure 9-14 Internal block diagram and pin configuration

9.3.10 Diagram M1, NCP5422AD (IC 7101)

See figure “Diagram B01A, NCP5422A (IC 7U00)“.

9.3.11 Diagram M2, PACIFIC3-N2 T6TF4HFG (IC 7202)

Block Diagram

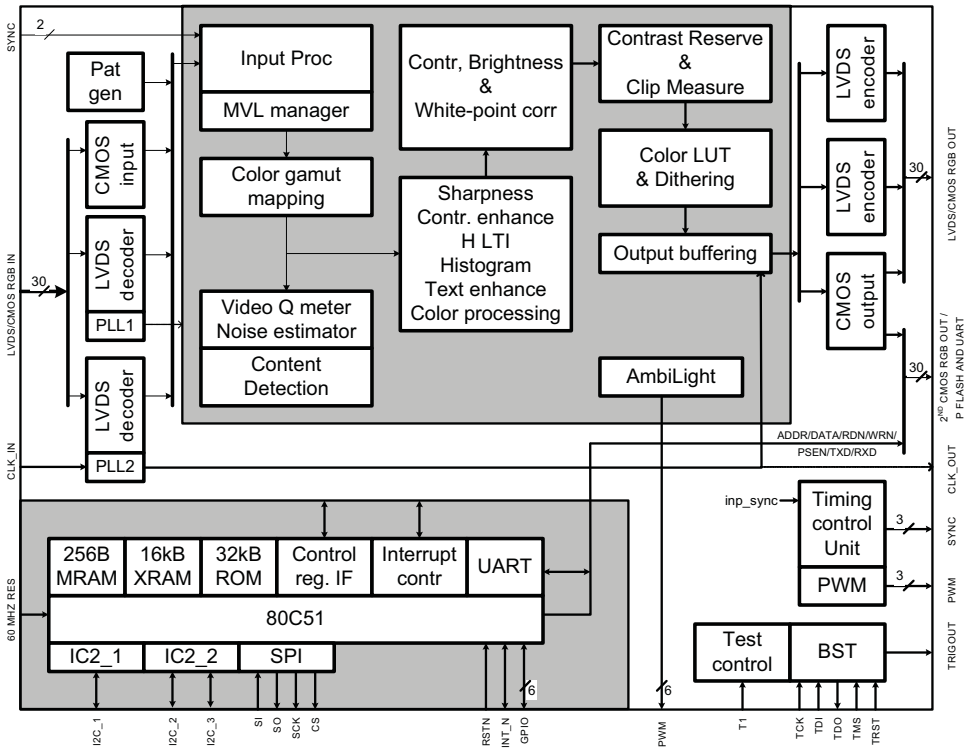

Pin Configuration

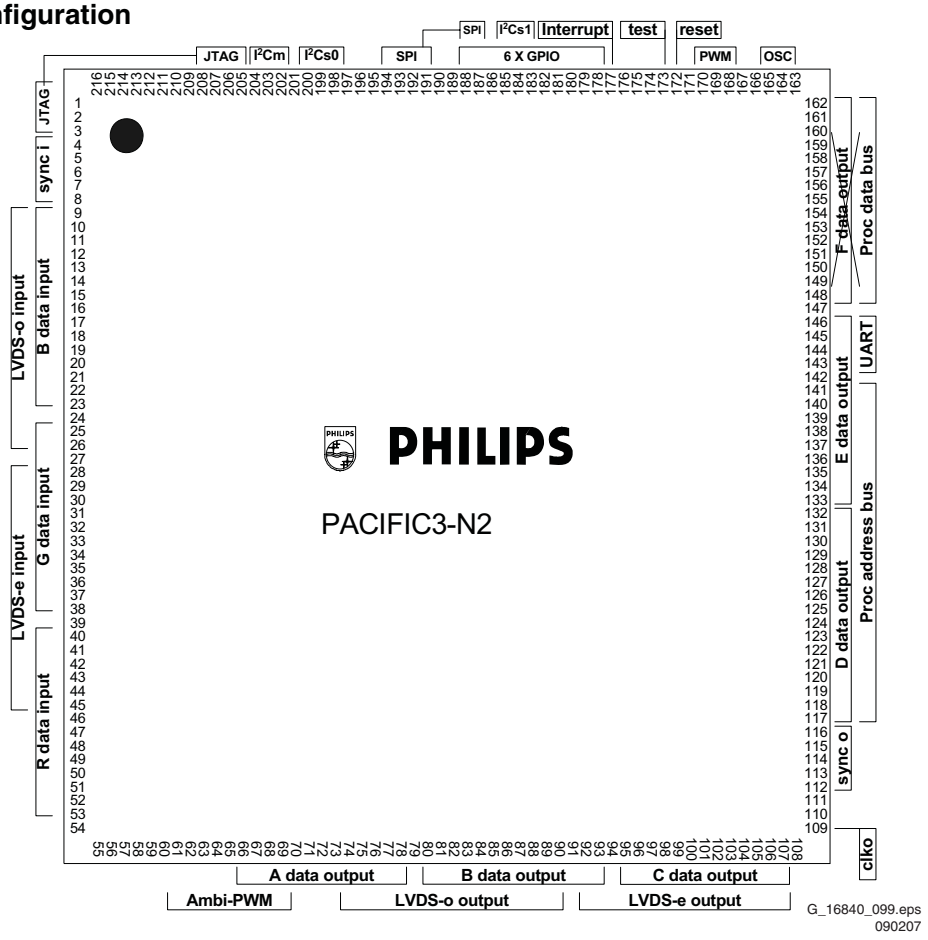

Figure 9-15 Internal block diagram and pin configuration

9.3.12 Diagram M2, P87LPC760BDH (IC 7203)

BLOCK DIAGRAM

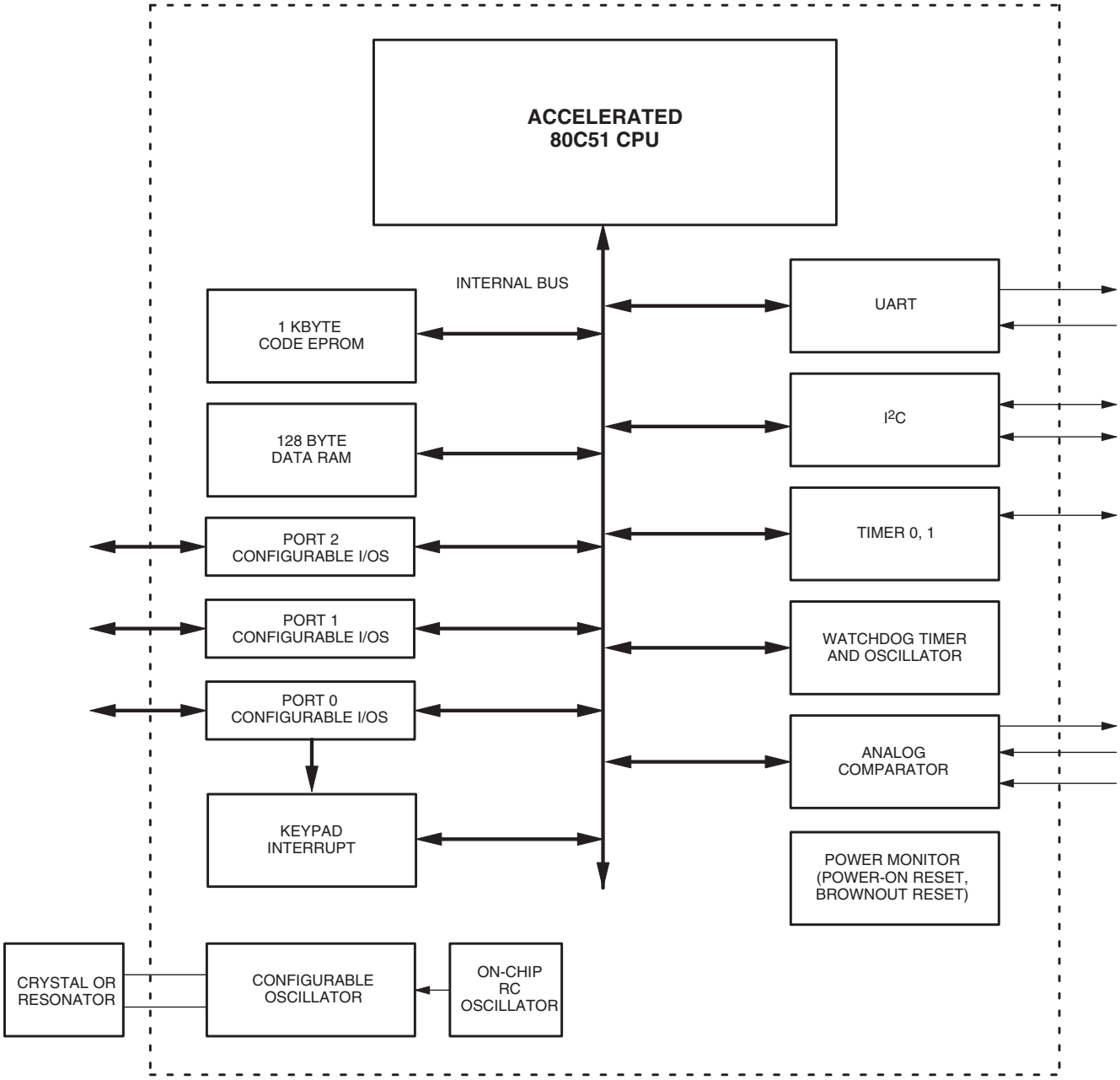

PIN CONFIGURATION

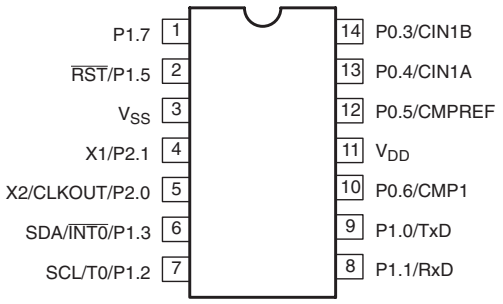

E_14620_150.eps
200804

Figure 9-16 Internal block diagram and pin configuration

10. Spare Parts List

Set Level

32PFL5332D/37-ME7

0802	One-ZIP file	Download from website
1004⚠	9322 230 03682	LC320W01-SL06
1005⚠	3122 427 24541	PSU PLCD190P5
1112	3139 268 05031	IR & LED Panel [J]
1114	3139 268 04971	Keyboard Ctrl Assy [E]
1116	3139 268 05091	Side A/V Assy [D]
1150	3139 268 09051	EBJ Service SSB
1163	3139 268 09131	AL Interconn. Assy [M]
8199	2422 076 00772	Cable Usb-A 1m0 Usb-A
8308	3104 311 07121	Cable 2p3/220/Inlet
8316	3104 311 10001	Cable 14p/180/14p Wh
8317	3104 311 10701	Cable 12p/680/12p
8405	3139 131 08821	Cable 30p/340/30p
8740	3139 131 08681	Cable 4p/480 560/2ft
8J02	3104 311 12511	Cable 13p/220/13p Wh
8M01	3139 131 08811	Cable 3p/680/3p
8M21	3104 311 07231	Cable 6p/560/6p
8M36	3104 311 07001	Cable 11p/400/11p
8M60	3139 131 08801	Cable 4p/560/4p
8P06	3139 131 08791	Cable30p/340/30p

⏦

5213	2422 264 00612	Loudsp. 12Ω 15W FR
5215	2422 264 00613	Loudsp. 12W 15W Tw

37PFL5332D/37-ME7

0802	One-ZIP file	Download from website
1004⚠	9322 246 96682	LC370WX1-SLB1
1005⚠	3122 427 24421	PSU PLCD300P1
1112	3139 268 05031	IR & LED Panel [J]
1114	3139 268 04971	Keyboard Ctrl Assy [E]
1116	3139 268 05091	Side A/V Assy [D]
1150	3139 268 09051	EBJ Service SSB
1163	3139 268 09131	AL Interconn. Assy [M]
8199	2422 076 00772	Cable Usb-A 1m0 Usb-A
8308	3104 311 08061	Cable 2p3/120/Inlet
8316	3104 311 12451	Cable 14p/340/14p
8317	3104 311 08191	Cable 12p/1200/12p
8405	3139 131 08821	Cable 30p/340/30p
8740	3139 131 08061	Cable 4p/1k0 820/2ft
8J02	3104 311 12521	Cable 13p/480/13p Wh
8M01	3139 131 08811	Cable 3p/680/3p
8M21	3104 311 07231	Cable 6p/560/6p
8M36	3104 311 08031	Cable 11p/480/11p
8M60	3139 131 08911	Cable 4p/680/4p
8P06	3139 131 08791	Cable30p/340/30p

⏦

5211	3139 128 78251	Loudsp. 8Ω 20W R
5212	3139 128 78511	Loudsp. 8Ω 20W L

42PFL5332D/37-ME7

0802	One-ZIP file	Download from website
1004⚠	9322 246 97682	LC420WX3-SLA1
1005⚠	3122 427 24421	PSU PLCD300P1
1112	3139 268 05031	IR & LED Panel [J]
1114	3139 268 04971	Keyboard Ctrl Assy [E]
1116	3139 268 05091	Side A/V Assy [D]
1150	3139 268 09051	EBJ Service SSB
1163	3139 268 09131	AL Interconn. Assy [M]
8199	2422 076 00772	Cable Usb-A 1m0 Usb-A
8308	3104 311 06951	Cable 2p3/180/2p
8316	3104 311 12451	Cable 14p/340/14p
8317	3104 311 08191	Cable 12p/1200/12p
8405	3139 131 08821	Cable 30p/340/30p
8740	3139 131 08851	Cable 4p/560 820/2ft
8J02	3104 311 12521	Cable 13p/480/13p Wh
8M01	3139 131 08811	Cable 3p/680/3p
8M21	3104 311 07231	Cable 6p/560/6p
8M36	3104 311 08031	Cable 11p/480/11p
8M60	3139 131 08911	Cable 4p/680/4p
8P06	3139 131 08791	Cable30p/340/30p

⏦

5211	3139 128 78251	Loudsp. 8Ω 20W R
5212	3139 128 78511	Loudsp. 8Ω 20W L

Small Signal Board [B]

Various

1740	4822 267 10565	Connector 4p
1A10	2422 549 44377	Filter 45.75MHz
1G02	2422 025 18741	Connector 6p m
1H00	2422 543 01397	Xtal 27MHz 18pF
1I03	2422 026 05912	Socket CINCH 6P
1I04	2422 026 05754	Socket CINCH 6p f
1I05	2422 033 00552	Socket HDMI 19p f
1I06	2422 033 00552	Socket HDMI 19p f
1J02	4822 267 10636	Conn 13p
1LA0	2422 543 01443	Xtal 16MHz 20pF
1M01	2422 025 10768	Connector 3p m
1M02	4822 267 10618	Connector 7p
1M16	2422 025 10775	Connector 3p m
1M21	2422 025 08149	Connector 6p m
1M36	2422 025 10655	Connector 11p m
1M49	2422 025 18884	Connector 4p m
1M60	2422 025 09406	Connector 4p m
1P06	2422 025 18772	Connector 30p m
1T01	2422 549 00895	SAW 44MHz F4LB-HMA
1T04	3112 297 14221	Tuner TD1336O/FGHP
1T11	2422 543 01522	Xtal 25.140MHz 20pF
1U01	2422 086 00623	Fuse 3A T 125V

⊣⊢

2A05	2020 552 96618	1nF 10% 50V 0402
2A07	2020 552 96623	2.2nF 10% 50V 0402
2A08	2020 552 96623	2.2nF 10% 50V 0402
2A09	2020 552 96623	2.2nF 10% 50V 0402
2A10	2238 787 15641	22nF 5% 16V 0402
2A11	2238 787 15641	22nF 5% 16V 0402
2A13	2238 787 15641	22nF 5% 16V 0402
2A14	2238 787 15641	22nF 5% 16V 0402
2A15	2238 787 15641	22nF 5% 16V 0402
2A16	2238 787 15641	22nF 5% 16V 0402
2A17	2238 787 15641	22nF 5% 16V 0402
2A18	2238 787 15641	22nF 5% 16V 0402
2A19	2020 552 96628	10nF 10% 16V 0402
2A21	2238 787 15641	22nF 5% 16V 0402
2A23	2020 552 96623	2.2nF 10% 50V 0402
2A24	2238 869 15101	100pF 5% 50V 0402
2A25	2238 869 15101	100pF 5% 50V 0402
2A26	2238 787 15641	22nF 5% 16V 0402
2A27	2238 787 15641	22nF 5% 16V 0402
2A29	2238 586 59812	100nF 20% 50V 0603
2A31	2238 787 15641	22nF 5% 16V 0402
2A32	2238 586 59812	100nF 20% 50V 0603
2A33	2222 780 15663	1µF 10% 0805
2A34	2222 780 15663	1µF 10% 0805
2A35	2238 586 59812	100nF 20% 50V 0603
2A37	4822 124 12108	100µF 20% 4V
2A38	2020 552 96618	1nF 10% 50V 0402
2A39	2238 586 59812	100nF 20% 50V 0603
2A40	2222 780 15663	1µF 10% 0805
2A41	2222 780 15663	1µF 10% 0805
2A42	4822 124 23237	22µF 6.3V
2A43	2238 586 59812	100nF 20% 50V 0603
2A44	2238 586 59812	100nF 20% 50V 0603
2A45	2238 586 59812	100nF 20% 50V 0603
2A47	2238 586 59812	100nF 20% 50V 0603
2A49	2020 552 96628	10nF 10% 16V 0402
2A50	2020 552 96628	10nF 10% 16V 0402
2A51	3198 035 03310	330pF 5% 50V 0402
2A52	2238 586 59812	100nF 20% 50V 0603
2A53	2020 552 96628	10nF 10% 16V 0402
2A54	2020 552 96628	10nF 10% 16V 0402
2A55	2020 552 96628	10nF 10% 16V 0402
2A56	2222 780 15663	1µF 10% 0805
2A57	2222 780 15663	1µF 10% 0805
2A58	2020 552 96628	10nF 10% 16V 0402
2A60	2222 780 15663	1µF 10% 0805
2A61	2222 780 15663	1µF 10% 0805
2A62	2238 586 59812	100nF 20% 50V 0603
2A63	2238 586 59812	100nF 20% 50V 0603
2A64	2238 586 59812	100nF 20% 50V 0603
2A65	2238 586 59812	100nF 20% 50V 0603
2A66	2222 780 15663	1µF 10% 0805
2A67	2222 780 15663	1µF 10% 0805
2A68	2222 780 15663	1µF 10% 0805
2A69	2222 780 15663	1µF 10% 0805
2A71	2222 780 15663	1µF 10% 0805
2A73	2222 780 15663	1µF 10% 0805
2A76	2222 780 15663	1µF 10% 0805
2A78	4822 124 12095	100µF 20% 16V
2A79	3198 034 03390	33pF 50V 0402
2A81	2238 586 59812	100nF 20% 50V 0603
2A83	4822 124 12095	100µF 20% 16V
2A84	3198 034 03390	33pF 50V 0402
2A86	2020 552 96618	1nF 10% 50V 0402
2A87	2222 780 15663	1µF 10% 0805
2A90	3198 035 14720	4.7nF 5% 25V 0402
2A92	2222 780 15663	1µF 10% 0805
2B10	2238 586 59812	100nF 20% 50V 0603
2B11	4822 124 81058	47µF 20% 4V
2B12	2238 586 59812	100nF 20% 50V 0603
2B13	2238 586 59812	100nF 20% 50V 0603
2B14	2238 586 59812	100nF 20% 50V 0603
2B15	2238 586 59812	100nF 20% 50V 0603
2B16	2238 586 59812	100nF 20% 50V 0603
2B17	2238 586 59812	100nF 20% 50V 0603
2B18	2238 586 59812	100nF 20% 50V 0603
2B19	2238 586 59812	100nF 20% 50V 0603
2B20	2238 586 59812	100nF 20% 50V 0603
2B21	2238 586 59812	100nF 20% 50V 0603
2B22	2238 586 59812	100nF 20% 50V 0603
2B23	2238 586 59812	100nF 20% 50V 0603
2B24	2238 586 59812	100nF 20% 50V 0603
2B25	2238 586 59812	100nF 20% 50V 0603
2B26	2238 586 59812	100nF 20% 50V 0603
2B31	2020 552 96628	10nF 10% 16V 0402
2B32	2238 586 59812	100nF 20% 50V 0603
2B33	2238 586 59812	100nF 20% 50V 0603
2B35	2238 586 59812	100nF 20% 50V 0603
2B36	2238 586 59812	100nF 20% 50V 0603
2B37	2238 586 59812	100nF 20% 50V 0603
2B38	2238 586 59812	100nF 20% 50V 0603
2B39	2238 586 59812	100nF 20% 50V 0603
2B40	4822 124 12108	100µF 20% 4V
2B41	4822 124 12108	100µF 20% 4V
2B45	2222 780 15663	1µF 10% 0805
2B46	2222 780 15663	1µF 10% 0805
2B50	2020 552 96628	10nF 10% 16V 0402
2B51	2020 552 96628	10nF 10% 16V 0402
2B52	2020 552 96628	10nF 10% 16V 0402
2B55	2020 552 96628	10nF 10% 16V 0402
2B56	3198 034 01580	1.5pF 1% 50V 0402
2B57	2238 869 15109	10pF 5% 50V 0402
2B58	2020 552 96628	10nF 10% 16V 0402
2B59	3198 034 01580	1.5pF 1% 50V 0402
2B60	2238 869 15109	10pF 5% 50V 0402
2B61	2020 552 96628	10nF 10% 16V 0402
2B62	3198 034 01580	1.5pF 1% 50V 0402
2B63	2238 869 15109	10pF 5% 50V 0402
2B64	2020 552 96628	10nF 10% 16V 0402
2B65	3198 034 01580	1.5pF 1% 50V 0402
2B66	2238 869 15109	10pF 5% 50V 0402
2B67	2020 552 96628	10nF 10% 16V 0402
2B68	3198 034 01580	1.5pF 1% 50V 0402
2B69	2238 869 15109	10pF 5% 50V 0402
2B70	2020 552 96628	10nF 10% 16V 0402
2B71	3198 034 01580	1.5pF 1% 50V 0402
2B72	2238 869 15109	10pF 5% 50V 0402
2B75	2020 552 96628	10nF 10% 16V 0402
2B76	2020 552 96628	10nF 10% 16V 0402
2B77	2020 552 96628	10nF 10% 16V 0402
2B78	2020 552 96628	10nF 10% 16V 0402
2B79	2020 552 96628	10nF 10% 16V 0402
2B80	2020 552 96628	10nF 10% 16V 0402
2C00	2238 586 59812	100nF 20% 50V 0603
2C01	2238 586 59812	100nF 20% 50V 0603
2C02	3198 035 14720	4.7nF 5% 25V 0402
2C03	2020 552 96628	10nF 10% 16V 0402
2C04	3198 035 14720	4.7nF 5% 25V 0402
2C05	2020 552 96628	10nF 10% 16V 0402
2C06	2238 586 59812	100nF 20% 50V 0603
2C07	2238 586 59812	100nF 20% 50V 0603
2C08	2020 552 00175	10µF 10% 6V3 0805
2C09	2238 586 59812	100nF 20% 50V 0603
2C10	2020 552 96618	1nF 10% 50V 0402
2C11	2020 552 00175	10µF 10% 6V3 0805
2C12	2238 586 59812	100nF 20% 50V 0603
2C13	2238 586 59812	100nF 20% 50V 0603
2C14	2238 586 59812	100nF 20% 50V 0603
2C15	2238 586 59812	100nF 20% 50V 0603
2C16	2020 552 96618	1nF 10% 50V 0402
2C17	2020 552 96618	1nF 10% 50V 0402
2C18	2020 552 96618	1nF 10% 50V 0402
2C19	2020 552 96618	1nF 10% 50V 0402
2C20	2238 586 59812	100nF 20% 50V 0603
2C21	2020 552 96618	1nF 10% 50V 0402
2D01	2020 552 00175	10µF 10% 6V3 0805
2D02	2020 552 00175	10µF 10% 6V3 0805

2D03	3198 035 02210	220pF 5% 50V 0402
2D11	2250 200 13667	2.2µF 10% 6.3V 0805
2D14	4822 126 14585	100nF 10% 0805 50V
2D17	4822 126 14585	100nF 10% 0805 50V
2D19	4822 126 14585	100nF 10% 0805 50V
2D20	4822 126 14585	100nF 10% 0805 50V
2D21	4822 126 14585	100nF 10% 0805 50V
2D22	2020 021 00258	220µF 20% 25V
2D23	2020 021 00258	220µF 20% 25V
2D26	2222 780 15663	1µF 10% 0805
2D27	2222 780 15663	1µF 10% 0805
2D28	2020 021 00258	220µF 20% 25V
2D30	4822 051 30008	Jumper 0603
2D31	4822 051 30008	Jumper 0603
2D32	2020 552 96621	1.5nF 10% 50V 0402
2D35	2020 552 96621	1.5nF 10% 50V 0402
2D36	2020 552 96621	1.5nF 10% 50V 0402
2D37	2020 552 96621	1.5nF 10% 50V 0402
2D38	4822 126 14585	100nF 10% 0805 50V
2D39	2020 552 96621	1.5nF 10% 50V 0402
2D40	2020 552 96621	1.5nF 10% 50V 0402
2D41	4822 126 14585	100nF 10% 0805 50V
2D43	4822 126 14585	100nF 10% 0805 50V
2D45	4822 126 14585	100nF 10% 0805 50V
2D46	4822 126 14585	100nF 10% 0805 50V
2D47	2238 916 11552	1.5nF 5% 25V 0603
2D48	2238 916 11552	1.5nF 5% 25V 0603
2D49	2238 916 11552	1.5nF 5% 25V 0603
2D50	2238 916 11552	1.5nF 5% 25V 0603
2D51	2020 552 96618	1nF 10% 50V 0402
2D52	2020 021 00258	220µF 20% 25V
2D53	2020 552 96684	470nF 10% 25V 0805
2D54	2020 552 96684	470nF 10% 25V 0805
2D55	2020 552 96621	1.5nF 10% 50V 0402
2D63	2238 787 15641	22nF 5% 16V 0402
2D64	3198 034 02280	2.2pF 1% 50V 0402
2D65	3198 034 02280	2.2pF 1% 50V 0402
2D66	3198 034 02280	2.2pF 1% 50V 0402
2D67	2238 586 59812	100nF 20% 50V 0603
2D68	2238 586 59812	100nF 20% 50V 0603
2D71	3198 034 04780	4.7pF 50V NP0 0402
2D72	3198 034 04780	4.7pF 50V NP0 0402
2D73	4822 126 14519	22pF 5% 50V 0402
2D74	4822 126 14519	22pF 5% 50V 0402
2G10	4822 124 81058	47µF 20% 4V
2G11	2238 586 59812	100nF 20% 50V 0603
2G12	2238 586 59812	100nF 20% 50V 0603
2G13	2238 586 59812	100nF 20% 50V 0603
2G14	2238 586 59812	100nF 20% 50V 0603
2G15	2238 586 59812	100nF 20% 50V 0603
2G16	2238 586 59812	100nF 20% 50V 0603
2G17	2238 586 59812	100nF 20% 50V 0603
2G18	2238 586 59812	100nF 20% 50V 0603
2G19	2238 586 59812	100nF 20% 50V 0603
2G21	2238 586 59812	100nF 20% 50V 0603
2G23	2238 586 59812	100nF 20% 50V 0603
2G24	2238 586 59812	100nF 20% 50V 0603
2G25	2238 586 59812	100nF 20% 50V 0603
2G26	2238 586 59812	100nF 20% 50V 0603
2G27	2238 586 59812	100nF 20% 50V 0603
2G28	2238 586 59812	100nF 20% 50V 0603
2G29	2238 586 59812	100nF 20% 50V 0603
2G30	4822 124 81058	47µF 20% 4V
2G31	2238 586 59812	100nF 20% 50V 0603
2G32	2238 586 59812	100nF 20% 50V 0603
2G33	2238 586 59812	100nF 20% 50V 0603
2G34	2238 586 59812	100nF 20% 50V 0603
2G37	2238 586 59812	100nF 20% 50V 0603
2G38	2238 586 59812	100nF 20% 50V 0603
2G39	2238 586 59812	100nF 20% 50V 0603
2G40	2238 586 59812	100nF 20% 50V 0603
2G41	2222 780 15663	1µF 10% 0805
2G42	2020 552 96618	1nF 10% 50V 0402
2G50	4822 124 81058	47µF 20% 4V
2H00	2238 869 15101	100pF 5% 50V 0402
2H01	2020 552 96618	1nF 10% 50V 0402
2H02	2238 586 59812	100nF 20% 50V 0603
2H03	2222 780 15663	1µF 10% 0805
2H06	2020 552 96618	1nF 10% 50V 0402
2H07	2020 552 96618	1nF 10% 50V 0402
2H08	3198 034 02790	47pF 1% 50V 0402
2H09	3198 034 02790	47pF 1% 50V 0402
2H10	2238 586 59812	100nF 20% 50V 0603
2H11	2238 869 15101	100pF 5% 50V 0402
2H12	2222 780 15663	1µF 10% 0805
2I02	2238 869 15101	100pF 5% 50V 0402
2I03	2238 869 15101	100pF 5% 50V 0402
2I05	2238 869 15101	100pF 5% 50V 0402
2I06	2238 869 15101	100pF 5% 50V 0402
2I07	2238 869 15101	100pF 5% 50V 0402
2I08	2238 869 15101	100pF 5% 50V 0402
2I09	3198 034 03390	33pF 50V 0402
2I10	2238 869 15101	100pF 5% 50V 0402
2I11	2238 869 15101	100pF 5% 50V 0402
2I14	2238 869 15101	100pF 5% 50V 0402
2I15	2238 869 15101	100pF 5% 50V 0402
2I16	2238 869 15101	100pF 5% 50V 0402
2I18	2238 869 15101	100pF 5% 50V 0402
2I19	2238 869 15101	100pF 5% 50V 0402
2I20	2238 869 15101	100pF 5% 50V 0402
2I21	2238 869 15101	100pF 5% 50V 0402
2I22	2238 869 15101	100pF 5% 50V 0402
2I23	2238 869 15101	100pF 5% 50V 0402
2I53	2238 586 59812	100nF 20% 50V 0603
2J01	2238 586 59812	100nF 20% 50V 0603
2J03	2238 586 59812	100nF 20% 50V 0603
2J06	2238 586 59812	100nF 20% 50V 0603
2J08	2238 586 59812	100nF 20% 50V 0603
2J10	2238 586 59812	100nF 20% 50V 0603
2J13	2238 586 59812	100nF 20% 50V 0603
2J16	2238 586 59812	100nF 20% 50V 0603
2J18	2238 586 59812	100nF 20% 50V 0603
2J20	2238 586 59812	100nF 20% 50V 0603
2J21	2238 869 15101	100pF 5% 50V 0402
2J22	4822 117 13605	Jumper 0402
2J23	2238 869 15101	100pF 5% 50V 0402
2J30	2238 869 15101	100pF 5% 50V 0402
2J31	2238 869 15101	100pF 5% 50V 0402
2J37	2238 869 15101	100pF 5% 50V 0402
2J38	2238 869 15101	100pF 5% 50V 0402
2J40	2238 869 15109	10pF 5% 50V 0402
2J41	2238 869 15109	10pF 5% 50V 0402
2J42	2238 869 15109	10pF 5% 50V 0402
2J43	2238 869 15109	10pF 5% 50V 0402
2J44	2238 869 15109	10pF 5% 50V 0402
2J45	2238 869 15109	10pF 5% 50V 0402
2J46	2238 869 15109	10pF 5% 50V 0402
2J47	2238 869 15109	10pF 5% 50V 0402
2J48	2238 869 15109	10pF 5% 50V 0402
2J49	2238 869 15109	10pF 5% 50V 0402
2J50	3198 035 04710	470pF 50V 0402
2J51	3198 035 04710	470pF 50V 0402
2J61	4822 117 13605	Jumper 0402
2J64	2238 869 15101	100pF 5% 50V 0402
2J69	2238 869 15101	100pF 5% 50V 0402
2J71	2238 586 59812	100nF 20% 50V 0603
2J72	2238 869 15109	10pF 5% 50V 0402
2J73	2238 869 15109	10pF 5% 50V 0402
2J76	2222 780 15663	1µF 10% 0805
2L01	2020 552 96618	1nF 10% 50V 0402
2L06	2222 780 15663	1µF 10% 0805
2L07	2238 586 59812	100nF 20% 50V 0603
2L08	2238 586 59812	100nF 20% 50V 0603
2L50	2238 586 59812	100nF 20% 50V 0603
2L51	2238 586 59812	100nF 20% 50V 0603
2L52	2238 586 59812	100nF 20% 50V 0603
2L53	2238 586 59812	100nF 20% 50V 0603
2L54	2238 586 59812	100nF 20% 50V 0603
2L55	2020 552 96618	1nF 10% 50V 0402
2L56	2238 586 59812	100nF 20% 50V 0603
2L57	2238 586 59812	100nF 20% 50V 0603
2L58	2238 586 59812	100nF 20% 50V 0603
2L59	2020 552 96618	1nF 10% 50V 0402
2L60	2238 586 59812	100nF 20% 50V 0603
2L61	2020 552 96618	1nF 10% 50V 0402
2L62	2020 552 96618	1nF 10% 50V 0402
2L63	2238 869 15101	100pF 5% 50V 0402
2L64	2020 552 96618	1nF 10% 50V 0402
2L65	3198 035 03320	3.3nF 5% 50V 0402
2L66	3198 035 03320	3.3nF 5% 50V 0402
2L80	2250 200 13667	2.2µF 10% 6.3V 0805
2L81	2250 200 13667	2.2µF 10% 6.3V 0805
2L82	2250 200 13667	2.2µF 10% 6.3V 0805
2L83	2250 200 13667	2.2µF 10% 6.3V 0805
2L84	2238 586 59812	100nF 20% 50V 0603
2L85	2238 586 59812	100nF 20% 50V 0603
2L86	2238 586 59812	100nF 20% 50V 0603
2L87	2238 586 59812	100nF 20% 50V 0603
2L88	2238 869 15101	100pF 5% 50V 0402
2L89	2020 552 96618	1nF 10% 50V 0402
2L90	2020 552 96618	1nF 10% 50V 0402
2L91	2020 552 96618	1nF 10% 50V 0402
2L92	2020 552 96618	1nF 10% 50V 0402
2LA0	4822 126 14519	22pF 5% 50V 0402
2LA1	4822 126 14519	22pF 5% 50V 0402
2LA2	2238 869 15109	10pF 5% 50V 0402
2LA4	2238 586 59812	100nF 20% 50V 0603
2LA5	3198 035 03320	3.3nF 5% 50V 0402
2LA6	3198 035 03320	3.3nF 5% 50V 0402
2LA8	3198 035 03320	3.3nF 5% 50V 0402
2LA9	3198 035 03320	3.3nF 5% 50V 0402
2LB0	2238 586 59812	100nF 20% 50V 0603
2LB1	2238 586 59812	100nF 20% 50V 0603
2LB3	2020 552 96618	1nF 10% 50V 0402
2LB4	2238 586 59812	100nF 20% 50V 0603
2LN2	4822 124 81058	47µF 20% 4V
2LN3	2238 586 59812	100nF 20% 50V 0603
2LN4	2238 586 59812	100nF 20% 50V 0603
2LN5	2238 586 59812	100nF 20% 50V 0603
2LN6	2238 586 59812	100nF 20% 50V 0603
2LN7	2238 586 59812	100nF 20% 50V 0603
2LN8	2238 586 59812	100nF 20% 50V 0603
2LP0	4822 124 12108	100µF 20% 4V
2LP2	2238 586 59812	100nF 20% 50V 0603
2LP3	2238 586 59812	100nF 20% 50V 0603
2LP4	2238 586 59812	100nF 20% 50V 0603
2LP7	4822 124 12108	100µF 20% 4V
2LP8	2238 586 59812	100nF 20% 50V 0603
2LP9	2238 586 59812	100nF 20% 50V 0603
2LR0	2238 586 59812	100nF 20% 50V 0603
2LR2	2238 586 59812	100nF 20% 50V 0603
2LR4	2238 586 59812	100nF 20% 50V 0603
2LR5	2238 586 59812	100nF 20% 50V 0603
2LR6	2238 586 59812	100nF 20% 50V 0603
2LR8	2238 586 59812	100nF 20% 50V 0603
2LR9	2238 586 59812	100nF 20% 50V 0603
2LS5	2238 586 59812	100nF 20% 50V 0603
2LT0	2222 780 15663	1µF 10% 0805
2M10	2020 552 96618	1nF 10% 50V 0402
2M11	2020 552 96618	1nF 10% 50V 0402
2M12	2020 552 96618	1nF 10% 50V 0402
2M13	2020 552 96618	1nF 10% 50V 0402
2M14	2020 552 96618	1nF 10% 50V 0402
2M15	2020 552 96623	2.2nF 10% 50V 0402
2M16	2020 552 96623	2.2nF 10% 50V 0402
2M17	2020 552 96623	2.2nF 10% 50V 0402
2M18	2020 552 96623	2.2nF 10% 50V 0402
2M19	2020 552 96618	1nF 10% 50V 0402
2M80	2238 586 59812	100nF 20% 50V 0603
2M81	4822 117 13548	1kΩ 5% 0402
2M82	2238 869 15101	100pF 5% 50V 0402
2M83	2238 869 15101	100pF 5% 50V 0402
2M84	2238 869 15101	100pF 5% 50V 0402
2M85	2238 869 15101	100pF 5% 50V 0402
2M86	2238 787 15641	22nF 5% 16V 0402
2M87	2238 869 15101	100pF 5% 50V 0402
2M91	2020 552 96628	10nF 10% 16V 0402
2M92	2222 780 15663	1µF 10% 0805
2M93	2020 552 96628	10nF 10% 16V 0402
2M94	2222 780 15663	1µF 10% 0805
2M95	2238 869 15101	100pF 5% 50V 0402
2M96	2238 869 15101	100pF 5% 50V 0402
2M97	2238 869 15101	100pF 5% 50V 0402
2P34	2238 586 59812	100nF 20% 50V 0603
2P35	2238 586 59812	100nF 20% 50V 0603
2P80	2238 586 59812	100nF 20% 50V 0603
2P81	2238 586 59812	100nF 20% 50V 0603
2Q01	2222 780 15663	1µF 10% 0805
2Q03	2222 780 15663	1µF 10% 0805
2Q04	2238 586 59812	100nF 20% 50V 0603
2Q05	2238 586 59812	100nF 20% 50V 0603
2Q06	2238 586 59812	100nF 20% 50V 0603
2Q07	2238 586 59812	100nF 20% 50V 0603
2Q08	2238 586 59812	100nF 20% 50V 0603
2Q09	2238 586 59812	100nF 20% 50V 0603
2Q10	2238 586 59812	100nF 20% 50V 0603
2Q11	2238 586 59812	100nF 20% 50V 0603
2Q12	2238 586 59812	100nF 20% 50V 0603
2Q13	2238 586 59812	100nF 20% 50V 0603
2Q14	2238 586 59812	100nF 20% 50V 0603
2Q15	2238 586 59812	100nF 20% 50V 0603
2Q16	2020 552 96628	10nF 10% 16V 0402
2Q17	2020 552 96628	10nF 10% 16V 0402
2Q18	2020 552 96628	10nF 10% 16V 0402
2Q19	2020 552 96628	10nF 10% 16V 0402
2Q20	2250 200 13672	4.7µF 10% 6.3V 0805
2Q21	2222 780 15663	1µF 10% 0805
2Q22	2250 200 13672	4.7µF 10% 6.3V 0805
2Q23	2222 780 15663	1µF 10% 0805
2Q24	2238 586 59812	100nF 20% 50V 0603
2Q26	2238 586 59812	100nF 20% 50V 0603
2Q27	2238 586 59812	100nF 20% 50V 0603
2Q28	2238 586 59812	100nF 20% 50V 0603
2Q30	2238 586 59812	100nF 20% 50V 0603
2Q32	2238 586 59812	100nF 20% 50V 0603
2Q33	2238 586 59812	100nF 20% 50V 0603
2Q34	2238 586 59812	100nF 20% 50V 0603
2Q35	2238 586 59812	100nF 20% 50V 0603
2Q37	2238 586 59812	100nF 20% 50V 0603
2Q38	2238 586 59812	100nF 20% 50V 0603
2Q39	2238 586 59812	100nF 20% 50V 0603
2Q42	2250 200 13672	4.7µF 10% 6.3V 0805
2Q44	2238 586 59812	100nF 20% 50V 0603
2Q45	2238 586 59812	100nF 20% 50V 0603
2Q46	2238 586 59812	100nF 20% 50V 0603
2Q47	2238 586 59812	100nF 20% 50V 0603
2Q48	2238 586 59812	100nF 20% 50V 0603
2Q49	2238 586 59812	100nF 20% 50V 0603
2Q50	2238 586 59812	100nF 20% 50V 0603
2Q51	2238 586 59812	100nF 20% 50V 0603
2Q52	2238 586 59812	100nF 20% 50V 0603
2Q53	2238 586 59812	100nF 20% 50V 0603

2Q54	2238 586 59812	100nF 20% 50V 0603
2Q55	2238 586 59812	100nF 20% 50V 0603
2Q56	2020 552 96628	10nF 10% 16V 0402
2Q57	2020 552 96628	10nF 10% 16V 0402
2Q58	2020 552 96628	10nF 10% 16V 0402
2Q59	2020 552 96628	10nF 10% 16V 0402
2Q60	2238 586 59812	100nF 20% 50V 0603
2Q61	2020 552 96618	1nF 10% 50V 0402
2Q62	2238 869 15101	100pF 5% 50V 0402
2Q63	2238 586 59812	100nF 20% 50V 0603
2Q64	2238 586 59812	100nF 20% 50V 0603
2Q65	2238 586 59812	100nF 20% 50V 0603
2Q66	2238 586 59812	100nF 20% 50V 0603
2Q67	2020 552 96618	1nF 10% 50V 0402
2Q69	2020 012 00028	470µF 20% 16V
2Q70	2238 869 15101	100pF 5% 50V 0402
2Q71	2238 869 15101	100pF 5% 50V 0402
2Q76	2020 552 96618	1nF 10% 50V 0402
2Q77	2020 552 96618	1nF 10% 50V 0402
2Q82	2250 200 13672	4.7µF 10% 6.3V 0805
2Q83	2250 200 13672	4.7µF 10% 6.3V 0805
2Q84	2020 552 96628	10nF 10% 16V 0402
2Q85	2020 552 96628	10nF 10% 16V 0402
2Q86	2020 552 96628	10nF 10% 16V 0402
2Q87	2020 552 96618	1nF 10% 50V 0402
2Q88	2020 552 96618	1nF 10% 50V 0402
2Q89	2020 552 96618	1nF 10% 50V 0402
2Q90	2020 552 96618	1nF 10% 50V 0402
2Q91	2020 552 96628	10nF 10% 16V 0402
2T10	2020 552 96628	10nF 10% 16V 0402
2T11	2020 552 96628	10nF 10% 16V 0402
2T12	2020 552 96628	10nF 10% 16V 0402
2T13	2020 552 96628	10nF 10% 16V 0402
2T14	2020 552 96628	10nF 10% 16V 0402
2T15	2020 552 96628	10nF 10% 16V 0402
2T16	2222 780 15663	1µF 10% 0805
2T17	2020 552 96628	10nF 10% 16V 0402
2T18	2020 552 96628	10nF 10% 16V 0402
2T19	2020 552 96628	10nF 10% 16V 0402
2T20	2020 552 96628	10nF 10% 16V 0402
2T21	2020 552 96628	10nF 10% 16V 0402
2T22	2020 552 96628	10nF 10% 16V 0402
2T23	2238 586 59812	100nF 20% 50V 0603
2T24	2222 780 15663	1µF 10% 0805
2T25	2020 552 96628	10nF 10% 16V 0402
2T26	3198 034 01510	150pF 1% 50V 0402
2T27	3198 034 01510	150pF 1% 50V 0402
2T30	2020 552 96628	10nF 10% 16V 0402
2T31	2020 552 96628	10nF 10% 16V 0402
2T33	2020 552 96628	10nF 10% 16V 0402
2T34	2020 552 96628	10nF 10% 16V 0402
2T35	2020 552 96628	10nF 10% 16V 0402
2T36	2238 586 59812	100nF 20% 50V 0603
2T37	2238 586 59812	100nF 20% 50V 0603
2T38	2238 586 59812	100nF 20% 50V 0603
2T39	2238 586 59812	100nF 20% 50V 0603
2T40	2238 586 59812	100nF 20% 50V 0603
2T41	2238 586 59812	100nF 20% 50V 0603
2T42	2238 586 59812	100nF 20% 50V 0603
2T43	2238 586 59812	100nF 20% 50V 0603
2T44	2238 586 59812	100nF 20% 50V 0603
2T45	2238 586 59812	100nF 20% 50V 0603
2T46	2238 586 59812	100nF 20% 50V 0603
2T47	2238 586 59812	100nF 20% 50V 0603
2T48	2238 586 59812	100nF 20% 50V 0603
2T49	2238 586 59812	100nF 20% 50V 0603
2T50	2238 586 59812	100nF 20% 50V 0603
2T53	4822 126 14519	22pF 5% 50V 0402
2T54	4822 126 14519	22pF 5% 50V 0402
2T56	2020 552 96628	10nF 10% 16V 0402
2T57	2222 780 15663	1µF 10% 0805
2T58	2020 552 96628	10nF 10% 16V 0402
2T59	2222 780 15663	1µF 10% 0805
2T60	2238 586 59812	100nF 20% 50V 0603
2T61	2238 586 59812	100nF 20% 50V 0603
2T62	2222 780 15663	1µF 10% 0805
2T63	2020 552 96628	10nF 10% 16V 0402
2T64	2238 586 59812	100nF 20% 50V 0603
2T65	3198 034 06890	68pF 50V 0402
2T66	3198 034 06890	68pF 50V 0402
2U09	2238 869 15101	100pF 5% 50V 0402
2U10	2238 586 59812	100nF 20% 50V 0603
2U11	2222 780 15663	1µF 10% 0805
2U12	2238 586 59812	100nF 20% 50V 0603
2U13	2238 586 59812	100nF 20% 50V 0603
2U14	2238 586 59812	100nF 20% 50V 0603
2U15	2238 586 59812	100nF 20% 50V 0603
2U16	2222 780 15663	1µF 10% 0805
2U17	2222 784 13681	22µF 10% 16V X5R 1812
2U18	2238 586 59812	100nF 20% 50V 0603
2U19	2238 586 59812	100nF 20% 50V 0603
2U20	2238 586 59812	100nF 20% 50V 0603
2U21	3198 035 03320	3.3nF 5% 50V 0402
2U22	2020 552 00207	100µF 20% 6V3 1812
2U23	2238 869 15101	100pF 5% 50V 0402
2U24	2222 784 13681	22µF 10% 16V X5R 1812
2U25	2222 784 13681	22µF 10% 16V X5R 1812
2U26	2238 586 59812	100nF 20% 50V 0603
2U27	2020 552 96618	1nF 10% 50V 0402
2U28	2020 552 96618	1nF 10% 50V 0402
2U29	2020 552 96618	1nF 10% 50V 0402
2U30	2020 552 96618	1nF 10% 50V 0402
2U31	3198 035 03320	3.3nF 5% 50V 0402
2U32	3198 035 03320	3.3nF 5% 50V 0402
2U37	2020 552 96684	470nF 10% 25V 0805
2U40	2222 780 15663	1µF 10% 0805
2U41	2222 780 15663	1µF 10% 0805
2U46	2222 780 15663	1µF 10% 0805
2U48	2020 552 96628	10nF 10% 16V 0402
2U49	2238 869 15101	100pF 5% 50V 0402
2U50	2020 552 96628	10nF 10% 16V 0402
2U51	2020 552 96628	10nF 10% 16V 0402
2U52	2020 552 96628	10nF 10% 16V 0402
2U53	2238 586 59812	100nF 20% 50V 0603
2U54	2238 586 59812	100nF 20% 50V 0603
2U55	2238 586 59812	100nF 20% 50V 0603
2U58	2222 780 15663	1µF 10% 0805
2U61	2222 780 15663	1µF 10% 0805
2U73	2238 787 15641	22nF 5% 16V 0402
2U85	3198 035 03320	3.3nF 5% 50V 0402
2V00	2020 552 96618	1nF 10% 50V 0402
2V01	2020 552 96618	1nF 10% 50V 0402
2V02	2020 552 96618	1nF 10% 50V 0402
2V16	2238 586 59812	100nF 20% 50V 0603
2V17	2238 586 59812	100nF 20% 50V 0603
2V18	2238 586 59812	100nF 20% 50V 0603
2V19	2238 586 59812	100nF 20% 50V 0603
2V20	2238 586 59812	100nF 20% 50V 0603
2V21	2238 586 59812	100nF 20% 50V 0603
2V22	2238 586 59812	100nF 20% 50V 0603
2V23	2238 586 59812	100nF 20% 50V 0603
2V24	2238 586 59812	100nF 20% 50V 0603
2V25	2238 586 59812	100nF 20% 50V 0603
2V26	2238 586 59812	100nF 20% 50V 0603
2V27	2238 586 59812	100nF 20% 50V 0603
2V28	2238 586 59812	100nF 20% 50V 0603
2V29	2238 586 59812	100nF 20% 50V 0603
2V30	2238 586 59812	100nF 20% 50V 0603
2V31	2238 586 59812	100nF 20% 50V 0603
2V35	4822 124 81058	47µF 20% 4V
2V36	2238 869 15101	100pF 5% 50V 0402
2V37	2238 869 15101	100pF 5% 50V 0402
2V38	2238 869 15101	100pF 5% 50V 0402
2V39	2238 869 15101	100pF 5% 50V 0402
2V40	2238 869 15101	100pF 5% 50V 0402
2V41	2238 869 15101	100pF 5% 50V 0402
2V42	2238 869 15101	100pF 5% 50V 0402
2V43	2238 869 15101	100pF 5% 50V 0402
2V44	2238 869 15101	100pF 5% 50V 0402
2V45	2238 869 15101	100pF 5% 50V 0402

⊣WW⊢

3A08	3198 031 01830	18kΩ 5% 0.01W 0402
3A10	2322 706 75601	560Ω 1% 0402
3A11	3198 031 01220	1.2kΩ 5% 0.01W 0402
3A12	3198 031 01220	1.2kΩ 5% 0.01W 0402
3A13	3198 031 04730	47Ω 5% 0402
3A14	4822 117 13545	100Ω 1% 0402
3A15	4822 117 13545	100Ω 1% 0402
3A17	4822 117 13545	100Ω 1% 0402
3A18	3198 031 01810	180Ω 5% 0402
3A19	3198 031 01810	180Ω 5% 0402
3A20	3198 031 03910	390Ω 1% 0402
3A21	4822 117 13543	470Ω 5% 0402
3A23	4822 117 11297	100kΩ 5% 0.1W
3A24	4822 117 13606	10kΩ 5% 0.01W 0402
3A25	3198 031 06840	680kΩ 5% 0.01W 0402
3A26	3198 031 04730	47Ω 5% 0402
3A27	3198 031 03390	33Ω 1% 0402
3A28	3198 031 03390	33Ω 1% 0402
3A29	4822 117 13548	1kΩ 5% 0402
3A30	3198 031 01530	15kΩ 5% 0.01W 0402
3A33	3198 031 03390	33Ω 1% 0402
3A34	3198 031 03390	33Ω 1% 0402
3A35	4822 117 13548	1kΩ 5% 0402
3A36	3198 031 01530	15kΩ 5% 0.01W 0402
3A39	4822 051 30689	68Ω 5% 0.063W 0603
3A41	4822 117 13548	1kΩ 5% 0402
3A42	4822 117 13606	10kΩ 5% 0.01W 0402
3A43	4822 117 13606	10kΩ 5% 0.01W 0402
3A44	4822 117 13606	10kΩ 5% 0.01W 0402
3A51	3198 031 02730	27kΩ 5% 0402
3A52	3198 031 02730	27kΩ 5% 0402
3A60	4822 117 13543	470Ω 5% 0402
3A61	4822 117 13543	470Ω 5% 0402
3A62	4822 117 13545	100Ω 1% 0402
3A63	4822 117 13545	100Ω 1% 0402
3B50	4822 117 13597	330Ω 5% 0.01W 0402
3B51	4822 117 13597	330Ω 5% 0.01W 0402
3B52	4822 117 13597	330Ω 5% 0.01W 0402
3B53	4822 117 13548	1kΩ 5% 0402
3B54	3198 031 01230	12kΩ 5% 0402
3B56	2350 033 11339	4 x 33Ω 5%
3B57	2350 033 11339	4 x 33Ω 5%
3B58	2350 033 11339	4 x 33Ω 5%
3B59	2350 033 11339	4 x 33Ω 5%
3B60	4822 117 13545	100Ω 1% 0402
3B61	4822 117 13545	100Ω 1% 0402
3B62	2350 033 11339	4 x 33Ω 5%
3B65	4822 117 13543	470Ω 5% 0402
3B66	4822 117 13548	1kΩ 5% 0402
3B67	4822 117 13543	470Ω 5% 0402
3B68	4822 117 13548	1kΩ 5% 0402
3B69	4822 117 13543	470Ω 5% 0402
3B70	4822 117 13548	1kΩ 5% 0402
3B71	4822 117 13543	470Ω 5% 0402
3B72	4822 117 13548	1kΩ 5% 0402
3B73	4822 117 13543	470Ω 5% 0402
3B74	4822 117 13548	1kΩ 5% 0402
3B75	4822 117 13543	470Ω 5% 0402
3B76	4822 117 13548	1kΩ 5% 0402
3B80	4822 117 13548	1kΩ 5% 0402
3B81	4822 117 13606	10kΩ 5% 0.01W 0402
3B82	4822 117 13548	1kΩ 5% 0402
3B83	4822 117 13606	10kΩ 5% 0.01W 0402
3B84	3198 031 01590	15Ω 5% 0402
3B86	3198 031 03390	33Ω 1% 0402
3B87	3198 031 03390	33Ω 1% 0402
3B88	3198 031 03390	33Ω 1% 0402
3B89	3198 031 02290	22Ω 5% 0.1W 0402
3C00	4822 117 13545	100Ω 1% 0402
3C01	4822 117 13545	100Ω 1% 0402
3C02	4822 117 13606	10kΩ 5% 0.01W 0402
3C03	3198 031 04730	47Ω 5% 0402
3C04	3198 031 04730	47Ω 5% 0402
3C05	4822 117 13545	100Ω 1% 0402
3C06	4822 117 13545	100Ω 1% 0402
3C07	4822 117 13606	10kΩ 5% 0.01W 0402
3C08	4822 117 11297	100kΩ 5% 0.1W
3C09	4822 117 13548	1kΩ 5% 0402
3C10	3198 031 04720	4.7kΩ 5% 0402
3C11	4822 117 13545	100Ω 1% 0402
3C12	4822 117 13545	100Ω 1% 0402
3C13	4822 117 13545	100Ω 1% 0402
3C14	4822 117 13545	100Ω 1% 0402
3C15	4822 117 13545	100Ω 1% 0402
3C16	4822 117 13545	100Ω 1% 0402
3C17	3198 031 04730	47Ω 5% 0402
3C18	3198 031 04730	47Ω 5% 0402
3C19	4822 117 13606	10kΩ 5% 0.01W 0402
3C20	4822 117 13545	100Ω 1% 0402
3C21	4822 117 13545	100Ω 1% 0402
3C22	4822 117 13548	1kΩ 5% 0402
3C23	3198 031 04720	4.7kΩ 5% 0402
3C24	4822 117 11297	100kΩ 5% 0.1W
3C25	4822 117 13606	10kΩ 5% 0.01W 0402
3C26	3198 031 02290	22Ω 5% 0.1W 0402
3C27	3198 031 02290	22Ω 5% 0.1W 0402
3C28	4822 117 13606	10kΩ 5% 0.01W 0402
3C30	4822 117 13545	100Ω 1% 0402
3C31	4822 117 13545	100Ω 1% 0402
3D01	4822 117 11297	100kΩ 5% 0.1W
3D10	3198 031 04730	47Ω 5% 0402
3D12	4822 117 13601	22kΩ 5% 0402
3D13	3198 031 02720	2.7kΩ 5% 0.01W 0402
3D14	3198 031 02240	220kΩ 5% 0.1W 0402
3D15	3198 031 04740	470kΩ 5% 0402
3D16	4822 117 13602	2.2kΩ 5% 0.01W 0402
3D17	3198 031 02240	220kΩ 5% 0.1W 0402
3D18	3198 031 04730	47Ω 5% 0402
3D20	4822 117 13601	22kΩ 5% 0402
3D21	3198 031 02720	2.7kΩ 5% 0.01W 0402
3D22	4822 117 13606	10kΩ 5% 0.01W 0402
3D23	4822 117 13602	2.2kΩ 5% 0.01W 0402
3D24	4822 117 13606	10kΩ 5% 0.01W 0402
3D25	4822 117 13548	1kΩ 5% 0402
3D26	4822 117 13602	2.2kΩ 5% 0.01W 0402
3D34	2322 762 60332	3.3kΩ 5% 2512
3D35	4822 117 13548	1kΩ 5% 0402
3D37	2322 762 60332	3.3kΩ 5% 2512
3D38	4822 117 13548	1kΩ 5% 0402
3D39	2350 033 11223	22kΩ 5%
3D40	2350 033 11223	22kΩ 5%
3D42	3198 031 04730	47Ω 5% 0402
3D43	5322 117 11726	10Ω 5%
3D44	2322 762 60331	330Ω 5% 2512
3D45	2322 762 60331	330Ω 5% 2512
3D46	3198 031 04780	4.7Ω 5% 0402
3D47	3198 031 04780	4.7Ω 5% 0402
3D49	3198 031 01530	15kΩ 5% 0.01W 0402

3D50	3198 031 03920	3.9kΩ 5% 0402
3D51	3198 031 03920	3.9kΩ 5% 0402
3D54	3198 031 04730	47Ω 5% 0402
3D56	3198 031 01530	15kΩ 5% 0.01W 0402
3D57	3198 031 01530	15kΩ 5% 0.01W 0402
3D58	3198 031 06810	680Ω 5% 0.01W 0402
3D64	4822 117 13548	1kΩ 5% 0402
3D65	4822 117 13548	1kΩ 5% 0402
3D67	3198 031 03920	3.9kΩ 5% 0402
3D68	4822 117 11297	100kΩ 5% 0.1W
3D69	3198 031 03920	3.9kΩ 5% 0402
3D70	4822 117 11297	100kΩ 5% 0.1W
3D71	4822 117 13606	10kΩ 5% 0.01W 0402
3D72	4822 117 13606	10kΩ 5% 0.01W 0402
3D73	3198 031 05610	560Ω 5% 0.01W 0402
3D74	3198 031 05610	560Ω 5% 0.01W 0402
3D75	4822 117 13603	33kΩ 5% 0402
3D76	4822 117 13601	22kΩ 5% 0402
3D78	4822 117 13601	22kΩ 5% 0402
3D79	4822 117 13601	22kΩ 5% 0402
3D81	3198 031 06810	680Ω 5% 0.01W 0402
3D82	3198 031 04730	47Ω 5% 0402
3D83	3198 031 04730	47Ω 5% 0402
3D84	3198 031 04730	47Ω 5% 0402
3D85	3198 031 04730	47Ω 5% 0402
3D86	4822 117 11297	100kΩ 5% 0.1W
3D87	3198 031 04730	47Ω 5% 0402
3D88	4822 117 13603	33kΩ 5% 0402
3D89	4822 117 13601	22kΩ 5% 0402
3D91	4822 117 13603	33kΩ 5% 0402
3G01	4822 117 11297	100kΩ 5% 0.1W
3G02	4822 117 13606	10kΩ 5% 0.01W 0402
3G03	4822 117 13603	33kΩ 5% 0402
3G04	4822 117 13606	10kΩ 5% 0.01W 0402
3G05	4822 117 13543	470Ω 5% 0402
3G08	3198 031 06890	68Ω 5% 0402
3G09	3198 031 06890	68Ω 5% 0402
3G10	3198 031 06890	68Ω 5% 0402
3G11	3198 031 06890	68Ω 5% 0402
3G12	3198 031 06890	68Ω 5% 0402
3G13	3198 031 06890	68Ω 5% 0402
3G14	3198 031 06890	68Ω 5% 0402
3G15	3198 031 06890	68Ω 5% 0402
3G16	3198 031 06890	68Ω 5% 0402
3G17	3198 031 06890	68Ω 5% 0402
3G18	3198 031 06890	68Ω 5% 0402
3G19	4822 117 13545	100Ω 1% 0402
3G22	4822 117 13545	100Ω 1% 0402
3G24	4822 117 13545	100Ω 1% 0402
3G28	4822 117 13606	10kΩ 5% 0.01W 0402
3G29	4822 117 13606	10kΩ 5% 0.01W 0402
3G30	4822 117 13546	47Ω 5% 0402
3G31	4822 117 13546	47Ω 5% 0402
3G33	4822 117 13546	47Ω 5% 0402
3G36	4822 117 13546	47Ω 5% 0402
3G37	4822 117 13606	10kΩ 5% 0.01W 0402
3G42	4822 117 13546	47Ω 5% 0402
3G43	4822 117 13545	100Ω 1% 0402
3G44	4822 117 13546	47Ω 5% 0402
3G45	4822 117 13545	100Ω 1% 0402
3G46	4822 117 13545	100Ω 1% 0402
3G47	4822 117 13545	100Ω 1% 0402
3G52	4822 117 13597	330Ω 5% 0.01W 0402
3G53	4822 117 13597	330Ω 5% 0.01W 0402
3G54	4822 117 13597	330Ω 5% 0.01W 0402
3G55	2350 033 11689	4x 68Ω 5% Netw.
3G56	2350 033 11689	4x 68Ω 5% Netw.
3G57	2350 033 11689	4x 68Ω 5% Netw.
3G58	2350 033 11689	4x 68Ω 5% Netw.
3G59	2350 033 11689	4x 68Ω 5% Netw.
3G60	2350 033 11689	4x 68Ω 5% Netw.
3G61	4822 117 13545	100Ω 1% 0402
3G62	4822 117 13545	100Ω 1% 0402
3H02	3198 031 06890	68Ω 5% 0402
3H04	3198 031 01820	1.8kΩ 5% 0.01W 0402
3H05	3198 031 01820	1.8kΩ 5% 0.01W 0402
3H06	3198 031 02290	22Ω 5% 0.1W 0402
3H07	3198 031 02290	22Ω 5% 0.1W 0402
3H08	3198 031 04720	4.7kΩ 5% 0402
3H10	3198 031 04720	4.7kΩ 5% 0402
3H11	3198 031 04720	4.7kΩ 5% 0402
3H16	3198 031 04720	4.7kΩ 5% 0402
3H17	3198 031 04720	4.7kΩ 5% 0402
3H18	3198 031 04720	4.7kΩ 5% 0402
3H22	3198 031 04720	4.7kΩ 5% 0402
3H23	3198 031 04720	4.7kΩ 5% 0402
3H25	4822 117 13545	100Ω 1% 0402
3H28	3198 031 04720	4.7kΩ 5% 0402
3H31	3198 031 04720	4.7kΩ 5% 0402
3H32	3198 031 04720	4.7kΩ 5% 0402
3H40	3198 031 04720	4.7kΩ 5% 0402
3H41	3198 031 04720	4.7kΩ 5% 0402
3H50	2322 706 75601	560Ω 1% 0402
3H51	2322 706 75601	560Ω 1% 0402
3H52	2322 706 75601	560Ω 1% 0402
3H53	2322 706 75601	560Ω 1% 0402
3H54	4822 117 13606	10kΩ 5% 0.01W 0402
3H55	4822 117 13606	10kΩ 5% 0.01W 0402
3H56	4822 117 13606	10kΩ 5% 0.01W 0402
3H57	4822 117 13606	10kΩ 5% 0.01W 0402
3H58	3198 031 02290	22Ω 5% 0.1W 0402
3H69	4822 117 13606	10kΩ 5% 0.01W 0402
3H70	3198 031 04720	4.7kΩ 5% 0402
3H71	3198 031 04720	4.7kΩ 5% 0402
3H72	4822 117 13545	100Ω 1% 0402
3H73	3198 031 02290	22Ω 5% 0.1W 0402
3H74	3198 031 06890	68Ω 5% 0402
3H75	4822 117 13545	100Ω 1% 0402
3H79	3198 031 02290	22Ω 5% 0.1W 0402
3H80	2350 033 11472	4x 4.7kΩ 5%
3H81	2350 033 11472	4x 4.7kΩ 5%
3H82	3198 031 01050	1MΩ 5% 0402
3H84	3198 031 04720	4.7kΩ 5% 0402
3H85	3198 031 04720	4.7kΩ 5% 0402
3H86	3198 031 04720	4.7kΩ 5% 0402
3H88	3198 031 04720	4.7kΩ 5% 0402
3H90	3198 031 04720	4.7kΩ 5% 0402
3H94	3198 031 04720	4.7kΩ 5% 0402
3H95	4822 117 13597	330Ω 5% 0.01W 0402
3H97	3198 031 04720	4.7kΩ 5% 0402
3H98	4822 117 13545	100Ω 1% 0402
3H99	4822 117 13545	100Ω 1% 0402
3I00	3198 031 07590	75Ω 5% 0402
3I01	3198 031 07590	75Ω 5% 0402
3I02	3198 031 07590	75Ω 5% 0402
3I03	3198 031 01510	150Ω 5% 0.01W 0402
3I04	3198 031 01510	150Ω 5% 0.01W 0402
3I06	3198 031 01510	150Ω 5% 0.01W 0402
3I07	3198 031 01510	150Ω 5% 0.01W 0402
3I08	3198 031 01510	150Ω 5% 0.01W 0402
3I09	4822 117 11297	100kΩ 5% 0.1W
3I0A	4822 117 11297	100kΩ 5% 0.1W
3I0B	3198 031 01510	150Ω 5% 0.01W 0402
3I0C	4822 117 11297	100kΩ 5% 0.1W
3I0D	3198 031 01510	150Ω 5% 0.01W 0402
3I0E	4822 117 11297	100kΩ 5% 0.1W
3I0H	3198 031 07590	75Ω 5% 0402
3I0I	3198 031 01510	150Ω 5% 0.01W 0402
3I0J	3198 031 07590	75Ω 5% 0402
3I0K	3198 031 01510	150Ω 5% 0.01W 0402
3I0L	3198 031 07590	75Ω 5% 0402
3I0M	3198 031 01510	150Ω 5% 0.01W 0402
3I10	4822 117 13545	100Ω 1% 0402
3I11	4822 117 13545	100Ω 1% 0402
3I12	3198 031 01510	150Ω 5% 0.01W 0402
3I13	3198 031 07590	75Ω 5% 0402
3I68	4822 117 13596	220Ω 5% 0.01W 0402
3I69	3198 031 01210	120Ω 5% 0.01W 0402
3J01	3198 031 01210	120Ω 5% 0.01W 0402
3J07	3198 031 06890	68Ω 5% 0402
3J12	3198 031 01210	120Ω 5% 0.01W 0402
3J13	3198 031 01210	120Ω 5% 0.01W 0402
3J25	3198 031 04730	47Ω 5% 0402
3J30	4822 117 13545	100Ω 1% 0402
3J31	4822 117 13545	100Ω 1% 0402
3J32	4822 117 13606	10kΩ 5% 0.01W 0402
3J33	3198 031 04720	4.7kΩ 5% 0402
3J35	4822 117 13602	2.2kΩ 5% 0.01W 0402
3J36	4822 117 13545	100Ω 1% 0402
3J37	4822 117 13545	100Ω 1% 0402
3J38	4822 117 13606	10kΩ 5% 0.01W 0402
3J39	3198 031 04720	4.7kΩ 5% 0402
3J43	4822 117 13546	47Ω 5% 0402
3J45	4822 117 13602	2.2kΩ 5% 0.01W 0402
3J51	4822 117 13545	100Ω 1% 0402
3J52	3198 031 04720	4.7kΩ 5% 0402
3J55	4822 117 11297	100kΩ 5% 0.1W
3J56	4822 117 11297	100kΩ 5% 0.1W
3J86	4822 117 13602	2.2kΩ 5% 0.01W 0402
3J88	3198 031 04720	4.7kΩ 5% 0402
3J91	4822 117 13545	100Ω 1% 0402
3J92	3198 031 04730	47Ω 5% 0402
3J99	4822 117 13546	47Ω 5% 0402
3JA2	3198 031 01210	120Ω 5% 0.01W 0402
3L00	4822 117 11297	100kΩ 5% 0.1W
3L01	4822 117 11297	100kΩ 5% 0.1W
3L02	4822 117 13606	10kΩ 5% 0.01W 0402
3L03	3198 031 04740	470kΩ 5% 0402
3L10	3198 031 03390	33Ω 1% 0402
3L11	2350 033 11339	4 x 33Ω 5%
3L12	2350 033 11339	4 x 33Ω 5%
3L13	2350 033 11339	4 x 33Ω 5%
3L14	2350 033 11339	4 x 33Ω 5%
3L15	3198 031 03390	33Ω 1% 0402
3L20	4822 117 13546	47Ω 5% 0402
3L21	2322 706 75601	560Ω 1% 0402
3L22	2322 706 75601	560Ω 1% 0402
3L38	2322 706 71002	1kΩ 1% 0402
3L39	2322 706 71002	1kΩ 1% 0402
3L40	3198 031 03390	33Ω 1% 0402
3L41	3198 031 03390	33Ω 1% 0402
3L42	3198 031 03390	33Ω 1% 0402
3L43	3198 031 03390	33Ω 1% 0402
3L44	3198 031 03390	33Ω 1% 0402
3L45	3198 031 03390	33Ω 1% 0402
3L46	3198 031 03390	33Ω 1% 0402
3L47	3198 031 03390	33Ω 1% 0402
3L48	3198 031 03390	33Ω 1% 0402
3L49	3198 031 03390	33Ω 1% 0402
3L50	3198 031 02290	22Ω 5% 0.1W 0402
3L51	4822 117 13545	100Ω 1% 0402
3L52	3198 031 02290	22Ω 5% 0.1W 0402
3L56	3198 031 02290	22Ω 5% 0.1W 0402
3L57	3198 031 02290	22Ω 5% 0.1W 0402
3L58	3198 031 02290	22Ω 5% 0.1W 0402
3L59	3198 031 02290	22Ω 5% 0.1W 0402
3L60	3198 031 02290	22Ω 5% 0.1W 0402
3L61	3198 031 02290	22Ω 5% 0.1W 0402
3L62	3198 031 02290	22Ω 5% 0.1W 0402
3L63	3198 031 02290	22Ω 5% 0.1W 0402
3L64	3198 031 02290	22Ω 5% 0.1W 0402
3L65	3198 031 02290	22Ω 5% 0.1W 0402
3L66	3198 031 02290	22Ω 5% 0.1W 0402
3L67	3198 031 02290	22Ω 5% 0.1W 0402
3L68	3198 031 02290	22Ω 5% 0.1W 0402
3L69	3198 031 02290	22Ω 5% 0.1W 0402
3L70	3198 031 02290	22Ω 5% 0.1W 0402
3L71	3198 031 02290	22Ω 5% 0.1W 0402
3L75	4822 117 11373	100Ω 1% 0805
3L76	4822 117 13606	10kΩ 5% 0.01W 0402
3L77	4822 117 13545	100Ω 1% 0402
3L78	4822 117 13606	10kΩ 5% 0.01W 0402
3L80	4822 117 13545	100Ω 1% 0402
3L81	4822 117 13606	10kΩ 5% 0.01W 0402
3L84	4822 117 13606	10kΩ 5% 0.01W 0402
3L85	4822 117 13606	10kΩ 5% 0.01W 0402
3L89	3198 031 02290	22Ω 5% 0.1W 0402
3L90	4822 117 13548	1kΩ 5% 0402
3L91	3198 031 03390	33Ω 1% 0402
3L92	3198 031 03390	33Ω 1% 0402
3L93	3198 031 03390	33Ω 1% 0402
3L94	3198 031 03390	33Ω 1% 0402
3L95	3198 031 03390	33Ω 1% 0402
3L96	3198 031 03390	33Ω 1% 0402
3L97	3198 031 03390	33Ω 1% 0402
3L98	3198 031 03390	33Ω 1% 0402
3L99	3198 031 02290	22Ω 5% 0.1W 0402
3LA0	4822 117 13606	10kΩ 5% 0.01W 0402
3LA2	4822 117 13606	10kΩ 5% 0.01W 0402
3LA3	4822 117 13606	10kΩ 5% 0.01W 0402
3LA4	4822 117 13606	10kΩ 5% 0.01W 0402
3LA5	4822 117 13548	1kΩ 5% 0402
3LA7	4822 117 13606	10kΩ 5% 0.01W 0402
3LA8	4822 117 13606	10kΩ 5% 0.01W 0402
3LA9	4822 117 13606	10kΩ 5% 0.01W 0402
3LB1	4822 117 13606	10kΩ 5% 0.01W 0402
3LB2	4822 117 13606	10kΩ 5% 0.01W 0402
3LB3	4822 117 13606	10kΩ 5% 0.01W 0402
3LB4	4822 117 13606	10kΩ 5% 0.01W 0402
3LB5	4822 117 13606	10kΩ 5% 0.01W 0402
3LB7	4822 117 13606	10kΩ 5% 0.01W 0402
3LB8	4822 117 13606	10kΩ 5% 0.01W 0402
3LB9	4822 117 13606	10kΩ 5% 0.01W 0402
3LC0	4822 117 13606	10kΩ 5% 0.01W 0402
3LC2	3198 031 02730	27kΩ 5% 0402
3LC3	4822 117 13606	10kΩ 5% 0.01W 0402
3LC4	4822 117 13606	10kΩ 5% 0.01W 0402
3LC5	4822 117 11297	100kΩ 5% 0.1W
3LC6	3198 031 04720	4.7kΩ 5% 0402
3LC7	3198 031 04720	4.7kΩ 5% 0402
3LC9	4822 117 13606	10kΩ 5% 0.01W 0402
3LD0	4822 117 13606	10kΩ 5% 0.01W 0402
3LD1	4822 117 13606	10kΩ 5% 0.01W 0402
3LD2	4822 117 13606	10kΩ 5% 0.01W 0402
3LD3	4822 117 13606	10kΩ 5% 0.01W 0402
3LD4	4822 117 13606	10kΩ 5% 0.01W 0402
3LD5	4822 117 13606	10kΩ 5% 0.01W 0402
3LD6	4822 117 13606	10kΩ 5% 0.01W 0402
3LD7	4822 117 13606	10kΩ 5% 0.01W 0402
3LD8	4822 117 13606	10kΩ 5% 0.01W 0402
3LE1	4822 117 11373	100Ω 1% 0805
3LE2	4822 117 13545	100Ω 1% 0402
3LE3	3198 031 04720	4.7kΩ 5% 0402
3LE4	3198 031 04720	4.7kΩ 5% 0402
3LE7	4822 117 13606	10kΩ 5% 0.01W 0402
3LE8	4822 117 13606	10kΩ 5% 0.01W 0402
3LE9	4822 117 13606	10kΩ 5% 0.01W 0402
3LF0	4822 117 13545	100Ω 1% 0402
3LF8	4822 117 13545	100Ω 1% 0402
3LG2	4822 117 11297	100kΩ 5% 0.1W
3LG3	4822 117 13545	100Ω 1% 0402
3LG5	4822 117 13545	100Ω 1% 0402

3LG6	4822 117 13545	100Ω 1% 0402
3LG7	4822 117 13545	100Ω 1% 0402
3LG8	4822 117 13545	100Ω 1% 0402
3LG9	4822 117 13545	100Ω 1% 0402
3LH0	4822 117 13545	100Ω 1% 0402
3LH1	4822 117 13545	100Ω 1% 0402
3LH2	4822 117 11373	100Ω 1% 0805
3LH3	4822 117 13545	100Ω 1% 0402
3LH4	4822 117 13545	100Ω 1% 0402
3LH5	4822 117 13606	10kΩ 5% 0.01W 0402
3LH6	4822 117 13606	10kΩ 5% 0.01W 0402
3LH7	4822 117 11373	100Ω 1% 0805
3LH8	4822 117 13545	100Ω 1% 0402
3LH9	4822 117 13545	100Ω 1% 0402
3LJ0	4822 117 13545	100Ω 1% 0402
3LJ1	4822 117 13545	100Ω 1% 0402
3LJ2	4822 117 13606	10kΩ 5% 0.01W 0402
3LJ3	4822 117 13606	10kΩ 5% 0.01W 0402
3LJ5	4822 117 13545	100Ω 1% 0402
3LJ6	4822 117 13545	100Ω 1% 0402
3LJ7	4822 117 13545	100Ω 1% 0402
3LJ8	4822 117 13545	100Ω 1% 0402
3LJ9	4822 117 13545	100Ω 1% 0402
3LK0	4822 117 13545	100Ω 1% 0402
3LK1	4822 117 13545	100Ω 1% 0402
3LK2	4822 117 13545	100Ω 1% 0402
3LK3	4822 117 13545	100Ω 1% 0402
3LK5	4822 117 13545	100Ω 1% 0402
3LK6	4822 117 13545	100Ω 1% 0402
3LK7	4822 117 13545	100Ω 1% 0402
3LK8	4822 117 13545	100Ω 1% 0402
3LK9	4822 117 13545	100Ω 1% 0402
3LL0	4822 117 13545	100Ω 1% 0402
3LL1	4822 117 13545	100Ω 1% 0402
3LL2	4822 117 13545	100Ω 1% 0402
3LL3	4822 117 13545	100Ω 1% 0402
3LL4	4822 117 13545	100Ω 1% 0402
3LL5	4822 117 13545	100Ω 1% 0402
3LL6	4822 117 13545	100Ω 1% 0402
3LL7	4822 117 13545	100Ω 1% 0402
3LL8	4822 117 13597	330Ω 5% 0.01W 0402
3LL9	4822 117 13596	220Ω 5% 0.01W 0402
3LM0	4822 117 11373	100Ω 1% 0805
3LM2	4822 117 11373	100Ω 1% 0805
3LM3	4822 117 11373	100Ω 1% 0805
3LM4	4822 117 11373	100Ω 1% 0805
3LM5	4822 051 20109	10Ω 5% 0.1W
3LM7	4822 117 11373	100Ω 1% 0805
3LN0	4822 117 11373	100Ω 1% 0805
3LN1	4822 117 11373	100Ω 1% 0805
3LN2	4822 117 11373	100Ω 1% 0805
3LN3	4822 117 11373	100Ω 1% 0805
3LN4	4822 117 11373	100Ω 1% 0805
3LN5	4822 117 11373	100Ω 1% 0805
3LN6	4822 117 11373	100Ω 1% 0805
3LN7	4822 117 11373	100Ω 1% 0805
3LQ6	4822 117 11373	100Ω 1% 0805
3LR0	3198 031 03390	33Ω 1% 0402
3LR1	3198 031 03390	33Ω 1% 0402
3LR2	4822 117 13606	10kΩ 5% 0.01W 0402
3LR3	4822 117 11373	100Ω 1% 0805
3LR4	4822 117 13606	10kΩ 5% 0.01W 0402
3LR9	2350 033 11339	4 x 33Ω 5%
3LS0	2350 033 11339	4 x 33Ω 5%
3LS1	2350 033 11339	4 x 33Ω 5%
3LS2	3198 031 06810	680Ω 5% 0.01W 0402
3LT5	4822 117 13606	10kΩ 5% 0.01W 0402
3LT7	4822 117 11297	100kΩ 5% 0.1W
3LT9	3198 031 04730	47Ω 5% 0402
3LU0	4822 117 13606	10kΩ 5% 0.01W 0402
3LU1	4822 117 13606	10kΩ 5% 0.01W 0402
3LU2	4822 117 13606	10kΩ 5% 0.01W 0402
3LU7	4822 117 13602	2.2kΩ 5% 0.01W 0402
3LU8	4822 117 13548	1kΩ 5% 0402
3LV7	4822 117 13606	10kΩ 5% 0.01W 0402
3LV8	3198 031 02730	27kΩ 5% 0402
3M00	4822 117 13606	10kΩ 5% 0.01W 0402
3M02	4822 117 13606	10kΩ 5% 0.01W 0402
3M04	4822 117 13545	100Ω 1% 0402
3M50	4822 117 13545	100Ω 1% 0402
3M51	4822 117 13545	100Ω 1% 0402
3M52	4822 117 13605	Jumper 0402
3M53	4822 117 13605	Jumper 0402
3M54	3198 031 01090	10Ω 5% 0.01W 0402
3M71	4822 117 13606	10kΩ 5% 0.01W 0402
3M72	3198 031 06810	680Ω 5% 0.01W 0402
3P37	4822 117 11297	100kΩ 5% 0.1W
3P57	4822 117 13606	10kΩ 5% 0.01W 0402
3P80	4822 117 13606	10kΩ 5% 0.01W 0402
3P81	4822 117 13602	2.2kΩ 5% 0.01W 0402
3P82	4822 117 13606	10kΩ 5% 0.01W 0402
3P83	4822 117 13545	100Ω 1% 0402
3P84	4822 117 13545	100Ω 1% 0402
3P85	4822 117 13545	100Ω 1% 0402
3P86	4822 117 13545	100Ω 1% 0402
3P88	4822 117 13606	10kΩ 5% 0.01W 0402
3Q02	2350 033 11689	4x 68Ω 5% Netw.
3Q03	3198 031 04720	4.7kΩ 5% 0402
3Q04	3198 031 04720	4.7kΩ 5% 0402
3Q05	2350 033 11689	4x 68Ω 5% Netw.
3Q07	2350 033 11689	4x 68Ω 5% Netw.
3Q08	2350 033 11689	4x 68Ω 5% Netw.
3Q09	3198 031 03390	33Ω 1% 0402
3Q10	4822 117 13545	100Ω 1% 0402
3Q11	4822 117 13545	100Ω 1% 0402
3Q12	4822 117 13545	100Ω 1% 0402
3Q13	4822 117 13545	100Ω 1% 0402
3Q14	4822 117 13545	100Ω 1% 0402
3Q15	4822 117 13545	100Ω 1% 0402
3Q16	3198 031 01530	15kΩ 5% 0.01W 0402
3Q17	3198 031 01530	15kΩ 5% 0.01W 0402
3Q18	3198 031 01530	15kΩ 5% 0.01W 0402
3Q19	2122 662 00166	PTC 0.4Ω 6V 3216
3Q20	3198 031 02290	22Ω 5% 0.1W 0402
3Q21	3198 031 02290	22Ω 5% 0.1W 0402
3Q22	4822 117 13606	10kΩ 5% 0.01W 0402
3Q23	3198 031 01530	15kΩ 5% 0.01W 0402
3Q25	2350 033 11689	4x 68Ω 5% Netw.
3Q26	2350 033 11689	4x 68Ω 5% Netw.
3Q27	3198 031 04720	4.7kΩ 5% 0402
3Q28	2350 033 11689	4x 68Ω 5% Netw.
3Q29	3198 031 05620	5.6kΩ 5% 0.01W 0402
3Q34	2350 033 11689	4x 68Ω 5% Netw.
3Q35	2350 033 11339	4 x 33Ω 5%
3Q36	2350 033 11339	4 x 33Ω 5%
3Q37	2350 033 11339	4 x 33Ω 5%
3Q38	2350 033 11339	4 x 33Ω 5%
3Q39	3198 031 03390	33Ω 1% 0402
3Q40	3198 031 03390	33Ω 1% 0402
3Q41	3198 031 03390	33Ω 1% 0402
3Q44	2350 033 11689	4x 68Ω 5% Netw.
3Q48	4822 117 13545	100Ω 1% 0402
3Q52	4822 117 13545	100Ω 1% 0402
3T10	2322 762 60479	47Ω 5% 2512
3T15	3198 031 04720	4.7kΩ 5% 0402
3T18	3198 031 04720	4.7kΩ 5% 0402
3T20	2322 762 60479	47Ω 5% 2512
3T21	4822 117 11297	100kΩ 5% 0.1W
3T22	4822 117 13596	220Ω 5% 0.01W 0402
3T23	4822 117 13596	220Ω 5% 0.01W 0402
3T25	4822 117 13602	2.2kΩ 5% 0.01W 0402
3T27	4822 117 13548	1kΩ 5% 0402
3T28	4822 117 13602	2.2kΩ 5% 0.01W 0402
3T29	4822 117 13548	1kΩ 5% 0402
3T35	2350 033 11689	4x 68Ω 5% Netw.
3T36	2350 033 11689	4x 68Ω 5% Netw.
3T37	2350 033 11689	4x 68Ω 5% Netw.
3T38	2322 706 73303	33kΩ 5% 0402
3T39	2322 706 73303	33kΩ 5% 0402
3T40	4822 117 13548	1kΩ 5% 0402
3T41	4822 117 13596	220Ω 5% 0.01W 0402
3T42	3198 031 08220	8.2kΩ 5% 0.5W
3T43	4822 117 13548	1kΩ 5% 0402
3T44	4822 117 13596	220Ω 5% 0.01W 0402
3T45	3198 031 04730	47Ω 5% 0402
3T46	3198 031 04730	47Ω 5% 0402
3T47	4822 117 13548	1kΩ 5% 0402
3T48	3198 031 04720	4.7kΩ 5% 0402
3T49	3198 031 04730	47Ω 5% 0402
3T50	3198 031 04730	47Ω 5% 0402
3T51	4822 117 13545	100Ω 1% 0402
3T52	4822 117 13545	100Ω 1% 0402
3T57	4822 117 13605	Jumper 0402
3T58	4822 117 13605	Jumper 0402
3U00	4822 117 13603	33kΩ 5% 0402
3U01	4822 117 13603	33kΩ 5% 0402
3U02	4822 117 13596	220Ω 5% 0.01W 0402
3U03	4822 117 13606	10kΩ 5% 0.01W 0402
3U04	4822 117 13601	22kΩ 5% 0402
3U05	4822 117 13596	220Ω 5% 0.01W 0402
3U06	3198 031 03930	39kΩ 5% 0402
3U07	3198 031 06820	6.8kΩ 5% 0.01W 0402
3U08	3198 031 03320	3.3kΩ 5% 0402
3U09	3198 031 03320	3.3kΩ 5% 0402
3U10	4822 117 13548	1kΩ 5% 0402
3U11	4822 051 30221	220Ω 5% 0.062W
3U12	4822 117 13548	1kΩ 5% 0402
3U13	3198 031 06820	6.8kΩ 5% 0.01W 0402
3U14	3198 031 06820	6.8kΩ 5% 0.01W 0402
3U15	4822 117 13548	1kΩ 5% 0402
3U16	3198 031 04720	4.7kΩ 5% 0402
3U17	2322 706 71002	1kΩ 1% 0402
3U18	4822 117 13596	220Ω 5% 0.01W 0402
3U19	4822 117 13601	22kΩ 5% 0402
3U20	4822 051 30109	10Ω 5% 0.062W
3U21	4822 051 30109	10Ω 5% 0.062W
3U22	5322 117 11726	10Ω 5%
3U23	4822 051 30008	Jumper 0603
3U24	4822 051 30109	10Ω 5% 0.062W
3U25	4822 117 13613	2.2Ω 5% 0603
3U26	4822 051 30008	Jumper 0603
3U27	4822 051 30109	10Ω 5% 0.062W
3U28	4822 117 13613	2.2Ω 5% 0603
3U29	4822 117 13548	1kΩ 5% 0402
3U30	4822 117 13548	1kΩ 5% 0402
3U32	4822 117 13606	10kΩ 5% 0.01W 0402
3U33	4822 117 13606	10kΩ 5% 0.01W 0402
3U34	4822 117 13606	10kΩ 5% 0.01W 0402
3U35	4822 117 13601	22kΩ 5% 0402
3U37	2322 706 74701	470Ω 1% 0402
3U38	3198 031 06820	6.8kΩ 5% 0.01W 0402
3U39	4822 117 11297	100kΩ 5% 0.1W
3U42	3198 031 04730	47Ω 5% 0402
3U44	3198 031 04730	47Ω 5% 0402
3U47	4822 117 13545	100Ω 1% 0402
3U48	4822 117 13545	100Ω 1% 0402
3U54	3198 031 01090	10Ω 5% 0.01W 0402
3U55	4822 117 13606	10kΩ 5% 0.01W 0402
3U56	4822 117 13548	1kΩ 5% 0402
3U82	3198 031 06820	6.8kΩ 5% 0.01W 0402
3U83	3198 031 06820	6.8kΩ 5% 0.01W 0402
3U85	4822 117 13606	10kΩ 5% 0.01W 0402
3U86	4822 117 13606	10kΩ 5% 0.01W 0402
3U87	4822 117 13606	10kΩ 5% 0.01W 0402
3U88	4822 117 13545	100Ω 1% 0402
3U89	4822 117 13606	10kΩ 5% 0.01W 0402
3U90	4822 117 13606	10kΩ 5% 0.01W 0402
3U91	4822 117 13606	10kΩ 5% 0.01W 0402
3U92	4822 117 13606	10kΩ 5% 0.01W 0402
3U93	4822 117 13606	10kΩ 5% 0.01W 0402
3U94	3198 031 03320	3.3kΩ 5% 0402
3U95	4822 117 13602	2.2kΩ 5% 0.01W 0402
3U96	4822 117 13601	22kΩ 5% 0402
3U97	3198 031 03320	3.3kΩ 5% 0402
3UA1	3198 031 03320	3.3kΩ 5% 0402
3UA3	4822 117 13602	2.2kΩ 5% 0.01W 0402
3UA4	2322 706 71002	1kΩ 1% 0402
3UA5	2322 706 76809	68Ω 1% 0402 RC32
3UA7	2322 706 71002	1kΩ 1% 0402
3UA8	3198 031 06890	68Ω 5% 0402
3UA9	3198 031 06890	68Ω 5% 0402
3V00	3198 031 02290	22Ω 5% 0.1W 0402
3V01	3198 031 02290	22Ω 5% 0.1W 0402
3V02	3198 031 02290	22Ω 5% 0.1W 0402
3V03	3198 031 02290	22Ω 5% 0.1W 0402
3V04	3198 031 02290	22Ω 5% 0.1W 0402
3V05	3198 031 02290	22Ω 5% 0.1W 0402
3V06	3198 031 02290	22Ω 5% 0.1W 0402
3V07	3198 031 02290	22Ω 5% 0.1W 0402
3V08	3198 031 02290	22Ω 5% 0.1W 0402
3V09	3198 031 02290	22Ω 5% 0.1W 0402
3V10	3198 031 02290	22Ω 5% 0.1W 0402
3V11	3198 031 02290	22Ω 5% 0.1W 0402
3V12	3198 031 02290	22Ω 5% 0.1W 0402
3V13	3198 031 02290	22Ω 5% 0.1W 0402
3V14	3198 031 02290	22Ω 5% 0.1W 0402
3V15	3198 031 02290	22Ω 5% 0.1W 0402
3V16	3198 031 02290	22Ω 5% 0.1W 0402
3V17	3198 031 02290	22Ω 5% 0.1W 0402
3V18	3198 031 02290	22Ω 5% 0.1W 0402
3V19	3198 031 02290	22Ω 5% 0.1W 0402
3V20	3198 031 02290	22Ω 5% 0.1W 0402
3V21	3198 031 02290	22Ω 5% 0.1W 0402
3V22	3198 031 02290	22Ω 5% 0.1W 0402
3V23	3198 031 02290	22Ω 5% 0.1W 0402
3V24	4822 117 13596	220Ω 5% 0.01W 0402
3V25	4822 117 13596	220Ω 5% 0.01W 0402
3V32	3198 031 02290	22Ω 5% 0.1W 0402
3V33	3198 031 02290	22Ω 5% 0.1W 0402
3V34	3198 031 02290	22Ω 5% 0.1W 0402
3V35	3198 031 02290	22Ω 5% 0.1W 0402
3V36	3198 031 02290	22Ω 5% 0.1W 0402
3V37	3198 031 02290	22Ω 5% 0.1W 0402
3V38	3198 031 02290	22Ω 5% 0.1W 0402
3V39	3198 031 02290	22Ω 5% 0.1W 0402
3V40	3198 031 02290	22Ω 5% 0.1W 0402
3V41	3198 031 02290	22Ω 5% 0.1W 0402
3V42	3198 031 02290	22Ω 5% 0.1W 0402
3V43	3198 031 02290	22Ω 5% 0.1W 0402
3V78	4822 117 13548	1kΩ 5% 0402
9A10	4822 051 20008	Jumper 0805
9A19	4822 117 13605	Jumper 0402
9B10	4822 117 13605	Jumper 0402
9B11	4822 117 13605	Jumper 0402
9B52	4822 117 13605	Jumper 0402
9B53	4822 117 13605	Jumper 0402
9B54	4822 117 13605	Jumper 0402
9C03	4822 117 13605	Jumper 0402
9C05	4822 117 13605	Jumper 0402
9D03	2350 033 91001	4 x Jumper
9D04	2350 033 91001	4 x Jumper
9H02	4822 117 13605	Jumper 0402

9H03	4822 117 13605	Jumper 0402
9H05	4822 117 13605	Jumper 0402
9H06	4822 117 13605	Jumper 0402
9H07	4822 117 13605	Jumper 0402
9H08	4822 117 13605	Jumper 0402
9H13	4822 117 13605	Jumper 0402
9H15	4822 117 13605	Jumper 0402
9H16	4822 117 13605	Jumper 0402
9J22	4822 117 13605	Jumper 0402
9J23	4822 117 13605	Jumper 0402
9J26	4822 117 13605	Jumper 0402
9J31	4822 051 20008	Jumper 0805
9J34	4822 117 13605	Jumper 0402
9J40	4822 117 13605	Jumper 0402
9LA0	4822 117 13605	Jumper 0402
9LA1	4822 117 13605	Jumper 0402
9LA8	4822 117 13605	Jumper 0402
9LA9	4822 117 13605	Jumper 0402
9M09	4822 117 13605	Jumper 0402
9P17	4822 117 13605	Jumper 0402
9P29	4822 117 13605	Jumper 0402
9P30	4822 117 13605	Jumper 0402
9P39	4822 117 13605	Jumper 0402
9P40	4822 117 13605	Jumper 0402
9P43	4822 117 13605	Jumper 0402
9P44	4822 117 13605	Jumper 0402
9T10	4822 117 13605	Jumper 0402
9T11	4822 117 13605	Jumper 0402
9T12	4822 117 13605	Jumper 0402
9T13	4822 117 13605	Jumper 0402
9U03	4822 117 13605	Jumper 0402

5A10	2422 549 00287	Bead 220Ω 100MHz
5A11	2422 549 00287	Bead 220Ω 100MHz
5A12	2422 549 00287	Bead 220Ω 100MHz
5A13	2422 549 00287	Bead 220Ω 100MHz
5A14	2422 549 00287	Bead 220Ω 100MHz
5A15	2422 549 00287	Bead 220Ω 100MHz
5A16	2422 549 00287	Bead 220Ω 100MHz
5A17	2422 549 00287	Bead 220Ω 100MHz
5A18	2422 535 94565	0.56µH 10% 0603
5A64	2422 549 43062	Bead 600Ω at 100MHz
5A65	2422 549 43062	Bead 600Ω at 100MHz
5B10	2422 549 00287	Bead 220Ω 100MHz
5B11	2422 549 00287	Bead 220Ω 100MHz
5B12	2422 549 00287	Bead 220Ω 100MHz
5B17	2422 549 00287	Bead 220Ω 100MHz
5B18	2422 549 00287	Bead 220Ω 100MHz
5B20	2422 535 94778	22nH 5% 0603
5B65	3198 018 51080	1µH 10% 0603
5B67	3198 018 51080	1µH 10% 0603
5B69	3198 018 51080	1µH 10% 0603
5B71	3198 018 51080	1µH 10% 0603
5B73	3198 018 51080	1µH 10% 0603
5B75	3198 018 51080	1µH 10% 0603
5C00	2422 549 43769	Bead 30Ω at 100MHz
5C01	2422 549 43769	Bead 30Ω at 100MHz
5C02	2422 549 00287	Bead 220Ω 100MHz
5C03	2422 549 00287	Bead 220Ω 100MHz
5C04	2422 549 00287	Bead 220Ω 100MHz
5D10	2422 549 00287	Bead 220Ω 100MHz
5D11	2422 549 00287	Bead 220Ω 100MHz
5D12	2422 536 00137	33µH 10%
5D13	2422 536 00137	33µH 10%
5D14	2422 549 00287	Bead 220Ω 100MHz
5D15	2422 549 00287	Bead 220Ω 100MHz
5D16	2422 549 00287	Bead 220Ω 100MHz
5G01	2422 549 42896	Bead 120Ω 100MHz
5G02	2422 549 42896	Bead 120Ω 100MHz
5H02	2422 549 45325	Bead 67Ω at 100MHz
5H03	2422 549 00287	Bead 220Ω 100MHz
5I02	2422 549 42896	Bead 120Ω 100MHz
5J00	2422 549 42896	Bead 120Ω 100MHz
5J01	2422 549 42896	Bead 120Ω 100MHz
5J02	2422 549 42896	Bead 120Ω 100MHz
5J03	2422 549 42896	Bead 120Ω 100MHz
5J04	2422 549 42896	Bead 120Ω 100MHz
5J05	2422 549 42896	Bead 120Ω 100MHz
5J06	2422 549 42896	Bead 120Ω 100MHz
5J07	2422 549 42896	Bead 120Ω 100MHz
5J10	4822 051 20008	Jumper 0805
5J11	4822 051 20008	Jumper 0805
5J12	4822 051 20008	Jumper 0805
5J50	2422 549 45325	Bead 67Ω at 100MHz
5J52	2422 549 45325	Bead 67Ω at 100MHz
5J54	2422 549 45325	Bead 67Ω at 100MHz
5J56	2422 549 45325	Bead 67Ω at 100MHz
5J58	2422 549 45325	Bead 67Ω at 100MHz
5J60	2422 549 45325	Bead 67Ω at 100MHz
5L50	2422 549 43769	Bead 30Ω at 100MHz
5L51	2422 549 00287	Bead 220Ω 100MHz
5L52	2422 549 00287	Bead 220Ω 100MHz
5LA1	2422 549 43062	Bead 600Ω at 100MHz
5LA2	2422 549 43062	Bead 600Ω at 100MHz
5LA3	2422 549 43062	Bead 600Ω at 100MHz
5LN0	2422 549 43062	Bead 600Ω at 100MHz
5LN1	2422 549 43062	Bead 600Ω at 100MHz
5LN2	2422 549 43062	Bead 600Ω at 100MHz
5LN3	2422 549 43062	Bead 600Ω at 100MHz
5LN4	2422 549 43062	Bead 600Ω at 100MHz
5M00	2422 549 00287	Bead 220Ω 100MHz
5M02	2422 549 00287	Bead 220Ω 100MHz
5M03	2422 549 00287	Bead 220Ω 100MHz
5M09	2422 549 00287	Bead 220Ω 100MHz
5M10	2422 549 00287	Bead 220Ω 100MHz
5M11	2422 549 00287	Bead 220Ω 100MHz
5M12	2422 549 00287	Bead 220Ω 100MHz
5Q01	2422 549 43062	Bead 600Ω at 100MHz
5Q02	2422 549 43062	Bead 600Ω at 100MHz
5Q03	2422 549 43062	Bead 600Ω at 100MHz
5Q04	2422 549 43062	Bead 600Ω at 100MHz
5Q07	2422 549 00287	Bead 220Ω 100MHz
5Q08	2422 549 00287	Bead 220Ω 100MHz
5T11	2422 549 00287	Bead 220Ω 100MHz
5T20	2422 549 00287	Bead 220Ω 100MHz
5T21	2422 549 00287	Bead 220Ω 100MHz
5T23	2422 549 00287	Bead 220Ω 100MHz
5T24	2422 549 00287	Bead 220Ω 100MHz
5T25	2422 549 00287	Bead 220Ω 100MHz
5T26	2422 549 00287	Bead 220Ω 100MHz
5T27	2422 549 43062	Bead 600Ω at 100MHz
5T28	2422 549 00287	Bead 220Ω 100MHz
5U00	2422 536 00671	10µH 20%
5U02	2422 536 00779	10µH 20%
5U03	2422 536 00671	10µH 20%
5U35	2422 549 00287	Bead 220Ω 100MHz
5U36	2422 549 00287	Bead 220Ω 100MHz
5U37	2422 549 00287	Bead 220Ω 100MHz
5U38	2422 549 00287	Bead 220Ω 100MHz

6A11	4822 130 11397	BAS316
6C00	4822 130 11397	BAS316
6C01	4822 130 11397	BAS316
6C02	4822 130 11397	BAS316
6C03	4822 130 11397	BAS316
6D10	4822 130 11397	BAS316
6D11	9340 548 69115	PDZ27B
6D12	4822 130 11397	BAS316
6G01	9322 134 46685	SML-310MT
6H00	9322 134 46685	SML-310MT
6H01	4822 130 11397	BAS316
6H03	4822 130 11397	BAS316
6H07	9340 566 10115	BAV99S
6H10	4822 130 11416	PDZ6.8B
6H11	4822 130 11416	PDZ6.8B
6H12	4822 130 11416	PDZ6.8B
6I00	9340 548 68115	PDZ24B
6I01	9340 566 10115	BAV99S
6I02	9340 548 68115	PDZ24B
6I08	9340 548 68115	PDZ24B
6I09	9340 548 68115	PDZ24B
6I0A	9340 548 68115	PDZ24B
6I0D	9340 548 68115	PDZ24B
6I0F	9340 548 68115	PDZ24B
6I0H	9340 548 68115	PDZ24B
6I0L	9340 548 68115	PDZ24B
6I0N	9340 548 68115	PDZ24B
6I0P	9340 548 68115	PDZ24B
6I11	9340 548 68115	PDZ24B
6J01	3198 020 55680	BZX384-C5V6
6J06	9322 134 46685	SML-310MT
6J07	4822 130 11397	BAS316
6J08	4822 130 80622	BAT54
6M10	9322 149 99685	BZX384-C3V6-V
6U11	9322 159 70685	MM3Z9V1
6U12	4822 130 11397	BAS316
6U21	4822 130 11152	UDZ18B
6U22	4822 130 11397	BAS316
6U23	4822 130 11397	BAS316

7A00	9352 767 55557	PNX3000HL/N3
7A04	9322 187 67668	TS482IS
7A05	9322 185 74668	LM324P
7A08	3198 010 42310	BC847BW
7A10	3198 010 42310	BC847BW
7A11	3198 010 42310	BC847BW
7A14	9340 219 30115	BC817-25W
7A15	3198 010 42320	BC857BW
7A16	9340 219 30115	BC817-25W
7A17	3198 010 42310	BC847BW
7B25	9322 213 41685	LD3985M18
7B45	4822 209 17398	LD1117DT33
7B50	9352 822 42557	TDA9970HS/8/C3
7C00	HDMI 1 SW	For SW see item 0802
7C01	9322 235 45685	AD8190ACPZ
7C02	HDMI 2 SW	For SW see item 0802
7C03	3198 010 42310	BC847BW
7C04	3198 010 42310	BC847BW
7C05	3198 010 42310	BC847BW
7D10	9322 213 35668	LM339P
7D11	9340 425 20115	BC847BS
7D12	9340 425 20115	BC847BS
7D14	3198 010 42310	BC847BW
7D15	3198 010 44350	BC807-25W
7D16	9340 425 30115	BC847BPN
7D17	9340 219 30115	BC817-25W
7D18	9322 229 29668	PowFet SI4559EY-E3
7D19	3198 010 42310	BC847BW
7D20	3198 010 44350	BC807-25W
7D21	9340 425 30115	BC847BPN
7D22	9340 219 30115	BC817-25W
7D23	9322 229 29668	PowFet SI4559EY-E3
7D24	9340 219 30115	BC817-25W
7D25	9340 425 30115	BC847BPN
7D26	9340 425 30115	BC847BPN
7G00	9322 221 66668	XC3S200-4TQG144C
7G01	9322 222 49668	XCF01SVOG20C
7G03	9322 215 24668	LD1117DT12
7G35	9340 425 20115	BC847BS
7G37	3198 010 44310	PDTC114EU
7J00	9352 811 95557	PNX2018E/M1E03
7J01	3198 010 42310	BC847BW
7J02	9340 425 30115	BC847BPN
7J08	9322 204 10685	SI3441BDV
7J09	3198 010 42310	BC847BW
7J33	9340 425 20115	BC847BS
7L50	9322 228 06671	K4D261638I-LC40
7LA7	Standby SW	For SW see item 0802
7LB2	9340 425 20115	BC847BS
7LB5	3198 010 42310	BC847BW
7M01	3198 010 42310	BC847BW
7M05	9322 213 43685	LD3985M33
7M06	9322 218 04685	LD3985M122
7M11	3198 010 44310	PDTC114EU
7P14	Main NVM SW	For SW see item 0802
7P15	9351 750 00118	74HC4066PW
7P16	3198 010 44310	PDTC114EU
7P17	3198 010 44310	PDTC114EU
7P18	3198 010 44210	PDTA114EU
7P80	Main SW	For SW see item 0802
7T10	9322 202 58668	LD1117DT50
7T12	3198 010 42310	BC847BW
7T13	9322 183 24669	LA7795T-E
7T20	9340 425 30115	BC847BPN
7T21	9322 163 75685	SI2306DS
7T22	9322 211 68668	NXT2004
7U00	9322 207 46668	NCP5422AD
7U01	9322 160 70668	SI4936ADY
7U03	9322 160 70668	SI4936ADY
7U05	9340 425 20115	BC847BS
7U07	9340 219 30115	BC817-25W
7U10	9340 425 10115	BC857BS
7U13	9340 425 30115	BC847BPN
7U15	9340 425 20115	BC847BS
7U24	3198 010 42310	BC847BW
7U25	9322 160 70668	SI4936ADY
7U27	9322 192 16685	TS2431AI
7U28	9340 575 87118	PHD38N02LT
7V00	9352 803 38557	PNX8552EH/M2/S1
7V01	9322 236 10671	K4D551638H-LC50
7V02	9322 236 10671	K4D551638H-LC50

Side A/V Panel [D]

Various

1301	2422 026 05133	Connector SVHS 4p f
1302	2422 026 05807	Sckt CINCH 3p f YeWhRd
1303	2422 026 05703	Socket Cinch 1p f
1303	4822 267 31014	Sckt headphone
1304	2422 025 10655	Connector 11p m
1308	2422 033 00486	Socket USB 4p F
1309	2422 025 09406	Connector 4p m
1310	2422 025 10768	Connector 3p m

2301	4822 126 11785	47pF 5% 50V 0603
2302	4822 126 11785	47pF 5% 50V 0603

2303	4822 122 33761	22pF 5% 50V
2304	4822 126 11785	47pF 5% 50V 0603
2305	2020 552 94427	100pF 5% 50V
2306	2020 552 94427	100pF 5% 50V
2307	2238 916 15641	22nF 10% 25V 0603
2308	2238 916 15641	22nF 10% 25V 0603
2309	5322 126 11583	10nF 10% 50V 0603
2310	5322 126 11583	10nF 10% 50V 0603
2311	4822 122 33761	22pF 5% 50V
2312	2020 004 90297	100µF 20% 16V

3301	4822 051 30759	75Ω 5% 0.062W
3302	4822 051 30759	75Ω 5% 0.062W
3303	4822 051 30109	10Ω 5% 0.062W
3304	4822 051 30101	100Ω 5% 0.062W
3305	4822 051 30109	10Ω 5% 0.062W
3306	4822 051 30101	100Ω 5% 0.062W
3307	4822 051 30101	100Ω 5% 0.062W
3308	4822 051 30101	100Ω 5% 0.062W
3309	4822 117 13632	100kΩ 1% 0603 0.62W
3310	4822 051 30101	100Ω 5% 0.062W
3311	4822 117 13632	100kΩ 1% 0603 0.62W
3312	4822 051 30103	10kΩ 5% 0.062W
3313	4822 051 30103	10kΩ 5% 0.062W
4301	4822 051 30008	Jumper 0603
4302	4822 051 30008	Jumper 0603
4308	4822 051 30008	Jumper 0603
4309	4822 051 30008	Jumper 0603
4310	4822 051 30008	Jumper 0603
4311	4822 051 30008	Jumper 0603

5300	2422 549 44197	Bead 220Ω at 100MHz

6301	9322 146 61685	DF3A6.8FU
6302	9322 146 61685	DF3A6.8FU
6303	9322 146 61685	DF3A6.8FU
6304	9322 146 61685	DF3A6.8FU
6305	9322 146 61685	DF3A6.8FU
6306	9322 146 61685	DF3A6.8FU
6307	9322 146 61685	DF3A6.8FU

Keyboard Control Board [E]

Various

1011	4822 276 13775	Switch 1p 0.1A 12V
1012	4822 276 13775	Switch 1p 0.1A 12V
1013	4822 276 13775	Switch 1p 0.1A 12V
1014	4822 276 13775	Switch 1p 0.1A 12V
1015	4822 276 13775	Switch 1p 0.1A 12V
1016	4822 276 13775	Switch 1p 0.1A 12V
1M01	2422 025 10775	Connector 3p m

3010	4822 051 30391	390Ω 5% 0.062W
3011	4822 051 30561	560Ω 5% 0.062W
3012	3198 021 31820	1.8kΩ 5% 0.062W 0603
3013	4822 051 30151	150Ω 5% 0.062W
3014	4822 117 12968	820Ω 5% 0.62W
3015	4822 051 30008	Jumper 0603
3016	4822 051 30008	Jumper 0603
3017	4822 051 30008	Jumper 0603
4001	4822 051 30008	Jumper 0603

6013	4822 130 11564	UDZ3.9B

IR & LED Panel [J]

2001	2020 552 00134	22µF 20% 6.3V 0805

3010	4822 051 30331	330Ω 5% 0.062W
3011	4822 051 30102	1kΩ 5% 0.062W
3012	4822 051 30682	6.8Ω 5% 0.062W
3013	4822 117 12968	820Ω 5% 0.62W
3014	4822 051 30683	68kΩ 5% 0.062W
3016	3198 021 32250	2.2MΩ 5% 0603
3018	3198 021 32250	2.2MΩ 5% 0603
3019	4822 051 30151	150Ω 5% 0.062W
3020	4822 051 30151	150Ω 5% 0.062W
4001	4822 051 30008	Jumper 0603
4002	4822 051 30008	Jumper 0603
4004	4822 051 30008	Jumper 0603
4005	4822 051 30008	Jumper 0603
4010	4822 051 30008	Jumper 0603
4012	4822 051 30008	Jumper 0603
4015	4822 051 30008	Jumper 0603
4016	4822 051 30008	Jumper 0603
4017	4822 051 30008	Jumper 0603
4019	4822 051 30008	Jumper 0603

6010	9322 243 77676	LED L-174A2PBC
6011	9322 244 07676	LED L-174A2IT-TNB5-19
6012	4822 130 11564	UDZ3.9B

7010	9322 243 06671	IR Receiver
7011	5322 130 60159	BC846B
7012	5322 130 60159	BC846B

AmbiLight Interconnection Panel [M]

Various

0806	3139 127 09711	Software
1201	2422 540 00017	Reson. 60MHz CSTCW
1405	2422 025 18772	Connector 30p m
1406	2422 025 18772	Connector 30p m
1407	2422 549 45325	Bead 67Ω at 100MHz
1408	2422 549 45325	Bead 67Ω at 100MHz
1409	2422 549 45325	Bead 67Ω at 100MHz
1410	2422 549 45325	Bead 67Ω at 100MHz
1411	2422 549 45325	Bead 67Ω at 100MHz
1412	2422 549 45325	Bead 67Ω at 100MHz
1413	2422 549 45325	Bead 67Ω at 100MHz
1414	2422 549 45325	Bead 67Ω at 100MHz
1415	2422 549 45325	Bead 67Ω at 100MHz
1416	2422 549 45325	Bead 67Ω at 100MHz
1417	2422 025 18779	Connector 4p m

2103	2022 552 05679	1µF 10% 16V 0805
2104	2020 552 00211	22µF 10% 16V 1210
2105	2020 552 00211	22µF 10% 16V 1210
2106	4822 124 11131	47µF 6.3V
2107	2238 586 59812	100nF 20% 50V 0603
2108	3198 035 03320	3.3nF 5% 50V 0402
2109	3198 035 03320	3.3nF 5% 50V 0402
2110	2020 552 00211	22µF 10% 16V 1210
2111	2022 031 00318	330µF 6.3V
2112	2020 552 96618	1nF 10% 50V 0402
2113	2238 586 59812	100nF 20% 50V 0603
2114	2022 552 05679	1µF 10% 16V 0805
2115	2020 552 96618	1nF 10% 50V 0402
2116	2022 552 05679	1µF 10% 16V 0805
2117	3198 035 03320	3.3nF 5% 50V 0402
2118	2238 586 59812	100nF 20% 50V 0603
2119	2020 552 94427	100pF 5% 50V
2120	3198 035 03320	3.3nF 5% 50V 0402
2121	2020 552 00211	22µF 10% 16V 1210
2123	2022 031 00318	330µF 6.3V
2124	2020 552 94427	100pF 5% 50V
2125	2238 586 59812	100nF 20% 50V 0603
2126	2020 552 96618	1nF 10% 50V 0402
2127	2238 586 59812	100nF 20% 50V 0603
2128	2238 586 59812	100nF 20% 50V 0603
2129	2020 552 96618	1nF 10% 50V 0402
2130	2022 552 05679	1µF 10% 16V 0805
2132	2238 586 59812	100nF 20% 50V 0603
2133	2238 586 59812	100nF 20% 50V 0603
2201	2022 552 05679	1µF 10% 16V 0805
2202	2020 552 96628	10nF 10% 16V 0402
2203	2020 552 96628	10nF 10% 16V 0402
2204	2020 552 96628	10nF 10% 16V 0402
2205	2020 552 96628	10nF 10% 16V 0402
2206	2020 552 96628	10nF 10% 16V 0402
2207	2020 552 96628	10nF 10% 16V 0402
2208	2020 552 96628	10nF 10% 16V 0402
2209	2020 552 96628	10nF 10% 16V 0402
2210	2020 552 96628	10nF 10% 16V 0402
2211	2020 552 96628	10nF 10% 16V 0402
2212	2020 552 96628	10nF 10% 16V 0402
2213	2020 552 96628	10nF 10% 16V 0402
2214	2020 552 96628	10nF 10% 16V 0402
2215	2022 552 05679	1µF 10% 16V 0805
2216	2020 552 96628	10nF 10% 16V 0402
2217	2020 552 96628	10nF 10% 16V 0402
2218	2238 586 59812	100nF 20% 50V 0603
2219	2022 552 05679	1µF 10% 16V 0805
2220	2022 552 05679	1µF 10% 16V 0805
2221	2020 552 96628	10nF 10% 16V 0402
2222	2020 552 96628	10nF 10% 16V 0402
2223	2020 552 00027	4.7µF 2% 6.3V 0603
2224	2020 552 96628	10nF 10% 16V 0402
2225	2020 552 96628	10nF 10% 16V 0402
2226	2020 552 96628	10nF 10% 16V 0402
2227	2020 552 96628	10nF 10% 16V 0402
2228	2020 552 96628	10nF 10% 16V 0402
2229	2020 552 96628	10nF 10% 16V 0402
2230	2022 552 05679	1µF 10% 16V 0805
2231	2020 552 96628	10nF 10% 16V 0402
2232	2020 552 96628	10nF 10% 16V 0402
2233	2022 552 05679	1µF 10% 16V 0805
2234	2020 552 96628	10nF 10% 16V 0402
2235	2020 552 96628	10nF 10% 16V 0402
2236	2020 552 96628	10nF 10% 16V 0402
2237	2020 552 96628	10nF 10% 16V 0402
2238	2022 552 05679	1µF 10% 16V 0805
2239	2020 552 96628	10nF 10% 16V 0402
2240	2020 552 96628	10nF 10% 16V 0402
2241	2020 552 96628	10nF 10% 16V 0402
2246	2020 552 96628	10nF 10% 16V 0402
2247	2020 552 96628	10nF 10% 16V 0402
2248	2020 552 96628	10nF 10% 16V 0402
2249	2020 552 96628	10nF 10% 16V 0402
2250	2020 552 96628	10nF 10% 16V 0402
2251	2020 552 96628	10nF 10% 16V 0402
2252	2020 552 96628	10nF 10% 16V 0402
2253	2020 552 96628	10nF 10% 16V 0402
2254	2020 552 96628	10nF 10% 16V 0402
2255	2020 552 96628	10nF 10% 16V 0402
2256	2020 552 96628	10nF 10% 16V 0402
2257	2020 552 96628	10nF 10% 16V 0402
2258	2020 552 96628	10nF 10% 16V 0402
2259	2020 552 96628	10nF 10% 16V 0402
2260	2020 552 96628	10nF 10% 16V 0402
2261	2020 552 96628	10nF 10% 16V 0402
2262	2020 552 96628	10nF 10% 16V 0402
2301	2238 586 59812	100nF 20% 50V 0603
2302	2238 586 59812	100nF 20% 50V 0603
2303	2022 552 05679	1µF 10% 16V 0805
2304	2022 552 05679	1µF 10% 16V 0805
2305	2238 586 59812	100nF 20% 50V 0603
2401	2238 869 15109	10pF 5% 50V 0402
2402	2238 869 15109	10pF 5% 50V 0402
2403	2238 869 15109	10pF 5% 50V 0402
2404	2238 869 15109	10pF 5% 50V 0402
2405	2238 869 15109	10pF 5% 50V 0402
2406	2238 869 15109	10pF 5% 50V 0402
2407	2238 869 15109	10pF 5% 50V 0402
2408	2238 869 15109	10pF 5% 50V 0402
2409	2238 869 15109	10pF 5% 50V 0402
2410	2238 869 15109	10pF 5% 50V 0402
2411	2238 869 15109	10pF 5% 50V 0402
2412	2238 869 15109	10pF 5% 50V 0402
2413	2238 869 15109	10pF 5% 50V 0402
2414	2238 869 15109	10pF 5% 50V 0402
2415	2238 869 15109	10pF 5% 50V 0402
2416	2238 869 15109	10pF 5% 50V 0402
2417	2238 869 15109	10pF 5% 50V 0402
2418	2238 869 15109	10pF 5% 50V 0402
2419	2238 869 15109	10pF 5% 50V 0402
2420	2238 869 15109	10pF 5% 50V 0402
2423	2238 869 15101	100pF 5% 50V 0402
2424	2238 869 15101	100pF 5% 50V 0402

3101	4822 117 13606	10kΩ 5% 0.01W 0402
3102	4822 051 30109	10Ω 5% 0.062W
3103	4822 051 30008	Jumper 0603
3104	4822 117 13606	10kΩ 5% 0.01W 0402
3105	4822 051 30109	10Ω 5% 0.062W
3106	3198 031 06820	6.8kΩ 5% 0.01W 0402
3107	3198 031 03320	3.3kΩ 5% 0402
3108	4822 117 13606	10kΩ 5% 0.01W 0402
3109	4822 117 13545	100Ω 1% 0402
3110	4822 117 13606	10kΩ 5% 0.01W 0402
3111	4822 117 13613	2.2Ω 5% 0603
3112	4822 117 13606	10kΩ 5% 0.01W 0402
3113	4822 117 13601	22kΩ 5% 0402
3114	5322 117 11726	10Ω 5%
3115	4822 117 13602	2.2kΩ 5% 0.01W 0402

3116	4822 117 13606	10kΩ 5% 0.01W 0402
3117	2322 706 71002	1kΩ 1% 0402
3118	2322 706 71002	1kΩ 1% 0402
3119	3198 031 06890	68Ω 5% 0402
3120	4822 051 30109	10Ω 5% 0.062W
3121	4822 051 30008	Jumper 0603
3122	4822 051 30109	10Ω 5% 0.062W
3123	4822 117 13596	220Ω 5% 0.01W 0402
3124	3198 031 06820	6.8kΩ 5% 0.01W 0402
3125	4822 051 30109	10Ω 5% 0.062W
3126	4822 117 13606	10kΩ 5% 0.01W 0402
3127	3198 031 06890	68Ω 5% 0402
3128	3198 031 04720	4.7kΩ 5% 0402
3129	2322 706 74701	470Ω 1% 0402
3130	4822 117 13613	2.2Ω 5% 0603
3131	3198 031 03320	3.3kΩ 5% 0402
3132	3198 031 06820	6.8kΩ 5% 0.01W 0402
3134	4822 117 13548	1kΩ 5% 0402
3135	3198 031 06820	6.8kΩ 5% 0.01W 0402
3136	3198 031 06820	6.8kΩ 5% 0.01W 0402
3137	2322 706 74701	470Ω 1% 0402
3138	4822 117 13548	1kΩ 5% 0402
3139	3198 031 06820	6.8kΩ 5% 0.01W 0402
3140	3198 031 06820	6.8kΩ 5% 0.01W 0402
3141	3198 031 06820	6.8kΩ 5% 0.01W 0402
3142	3198 031 03930	39kΩ 5% 0402
3143	3198 031 03320	3.3kΩ 5% 0402
3144	3198 031 03320	3.3kΩ 5% 0402
3145	4822 117 13606	10kΩ 5% 0.01W 0402
3146	2322 706 71002	1kΩ 1% 0402
3201	4822 117 11297	100kΩ 5% 0.1W
3202	4822 117 13546	47Ω 5% 0402
3203	3198 031 04720	4.7kΩ 5% 0402
3204	3198 031 04720	4.7kΩ 5% 0402
3205	3198 031 04720	4.7kΩ 5% 0402
3206	3198 031 01050	1MΩ 5% 0402
3209	4822 117 13548	1kΩ 5% 0402
3210	4822 117 13606	10kΩ 5% 0.01W 0402
3212	3198 031 04720	4.7kΩ 5% 0402
3213	4822 117 13606	10kΩ 5% 0.01W 0402
3215	3198 031 04720	4.7kΩ 5% 0402
3216	4822 117 13545	100Ω 1% 0402
3217	4822 117 13545	100Ω 1% 0402
3218	4822 117 13545	100Ω 1% 0402
3222	4822 117 13545	100Ω 1% 0402
3223	4822 117 13545	100Ω 1% 0402
3224	4822 117 13545	100Ω 1% 0402
3234	3198 031 04720	4.7kΩ 5% 0402
3235	4822 117 13545	100Ω 1% 0402
3236	4822 117 13606	10kΩ 5% 0.01W 0402
3301	3198 031 04720	4.7kΩ 5% 0402
3302	3198 031 04720	4.7kΩ 5% 0402
3303	3198 031 04730	47Ω 5% 0402
3304	4822 117 13548	1kΩ 5% 0402
3305	4822 117 13546	47Ω 5% 0402
3306	3198 031 04730	47Ω 5% 0402
3307	4822 117 13606	10kΩ 5% 0.01W 0402
3308	4822 117 13606	10kΩ 5% 0.01W 0402
3309	4822 117 13545	100Ω 1% 0402
3310	4822 117 13606	10kΩ 5% 0.01W 0402
3405	4822 117 13545	100Ω 1% 0402
3406	4822 117 13545	100Ω 1% 0402
3407	4822 117 13545	100Ω 1% 0402
3408	4822 117 13545	100Ω 1% 0402
3409	4822 117 13545	100Ω 1% 0402
3410	4822 117 13545	100Ω 1% 0402
3411	4822 117 13545	100Ω 1% 0402
3417	4822 117 13605	Jumper 0402
3418	4822 117 13605	Jumper 0402
4101	4822 117 13605	Jumper 0402
4401	4822 051 30008	Jumper 0603
4402	4822 051 30008	Jumper 0603
4403	4822 051 30008	Jumper 0603
4404	4822 051 30008	Jumper 0603
4407	4822 117 13605	Jumper 0402
4408	4822 117 13605	Jumper 0402
4409	4822 117 13605	Jumper 0402
4410	4822 117 13605	Jumper 0402
4413	4822 051 30008	Jumper 0603
4414	4822 051 30008	Jumper 0603
4415	4822 051 30008	Jumper 0603
4416	4822 051 30008	Jumper 0603

5103	2422 549 45748	220Ω 100MHz 0603
5104	2422 536 00779	10µH 20%
5105	2422 549 45748	220Ω 100MHz 0603
5106	2422 536 00671	10µH 20%
5107	2422 536 00671	10µH 20%
5201	2422 549 45748	I220Ω 100MHz 0603
5202	2422 549 45748	220Ω 100MHz 0603
5203	2422 549 45748	220Ω 100MHz 0603
5204	2422 549 45748	220Ω 100MHz 0603
5205	2422 549 45748	220Ω 100MHz 0603
5206	2422 549 45748	220Ω 100MHz 0603
5207	2422 549 45748	220Ω 100MHz 0603
5301	2422 549 45748	220Ω 100MHz 0603
5302	2422 549 45748	220Ω 100MHz 0603

6101	4822 130 11397	BAS316
6102	4822 130 11397	BAS316
6103	4822 130 11397	BAS316
6104	4822 130 11152	UDZ18B
6301	9322 134 46685	SML-310MT
6302	9322 134 46685	SML-310MT
6303	3198 020 55680	BZX384-C5V6
6304	4822 130 11148	UDZ4.7B

7101	9322 207 46668	NCP5422AD
7102	9340 425 30115	BC847BPN
7103	9322 187 04668	LF25ABDT
7104	9322 160 70668	SI4936ADY
7105	9322 160 70668	SI4936ADY
7106	9340 425 20115	BC847BS
7107	9340 219 30115	BC817-25W
7201	9322 206 45668	M25P05-AVMN6P
7202	Pacific 3	For SW see item 0806
7204	3198 010 42310	BC847BW
7302	9322 204 10685	SI3441BDV
7303	3198 010 42310	BC847BW

11. Revision List

Manual xxxx xxx xxxx.0

- First release.