Spis schematów

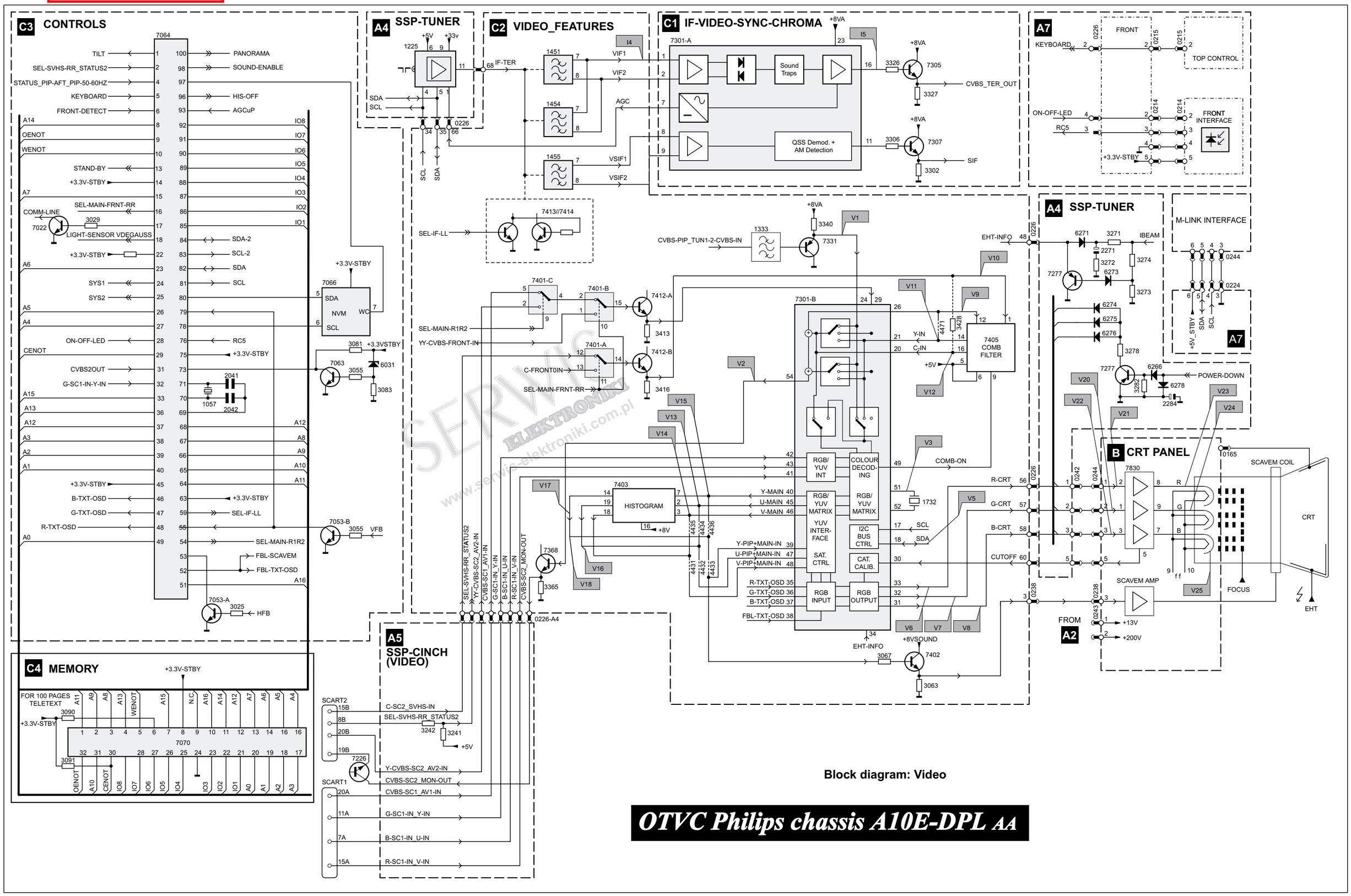

Block diagram: Video

OTVC Philips chassis A10E-DPL AA

Spis schematów

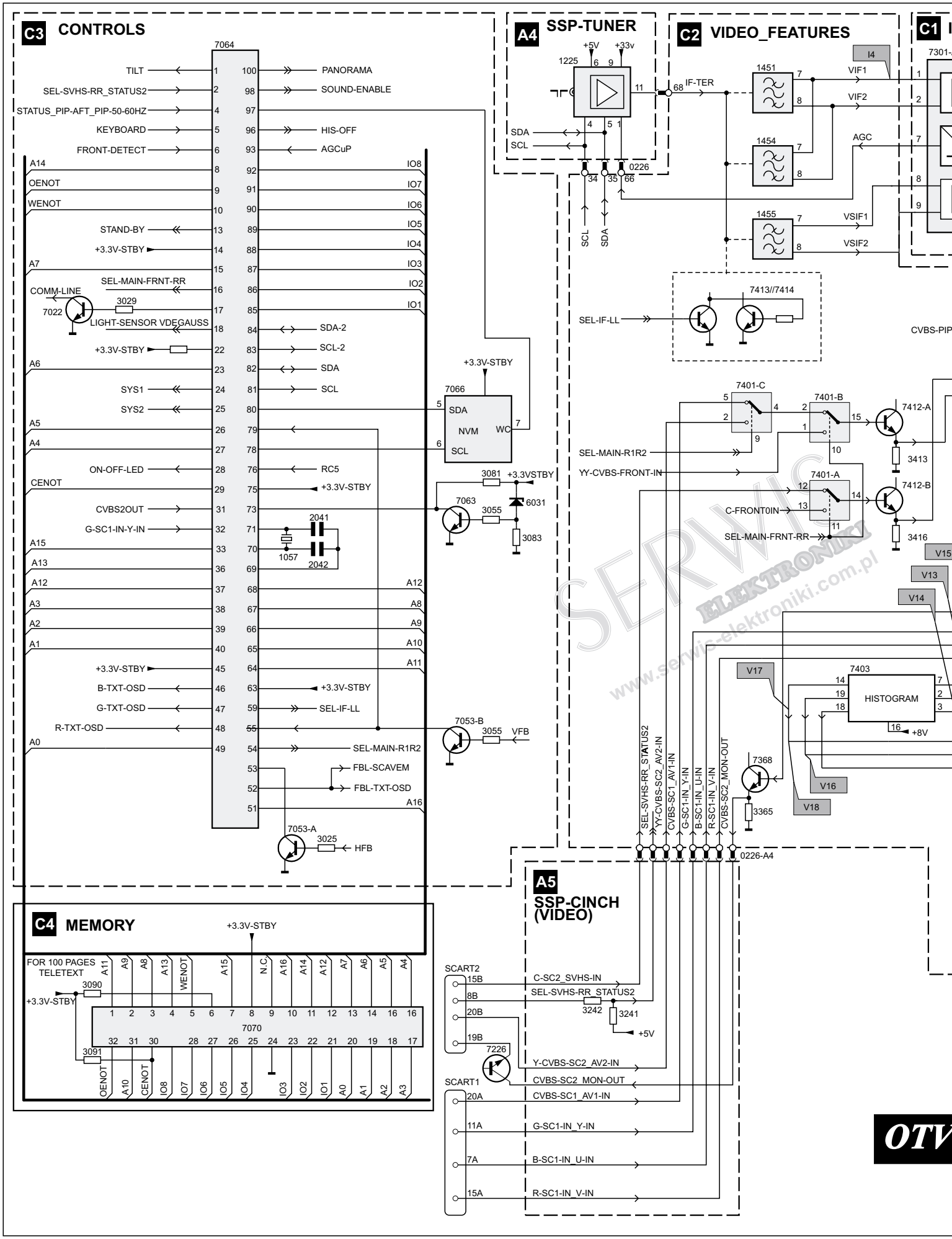

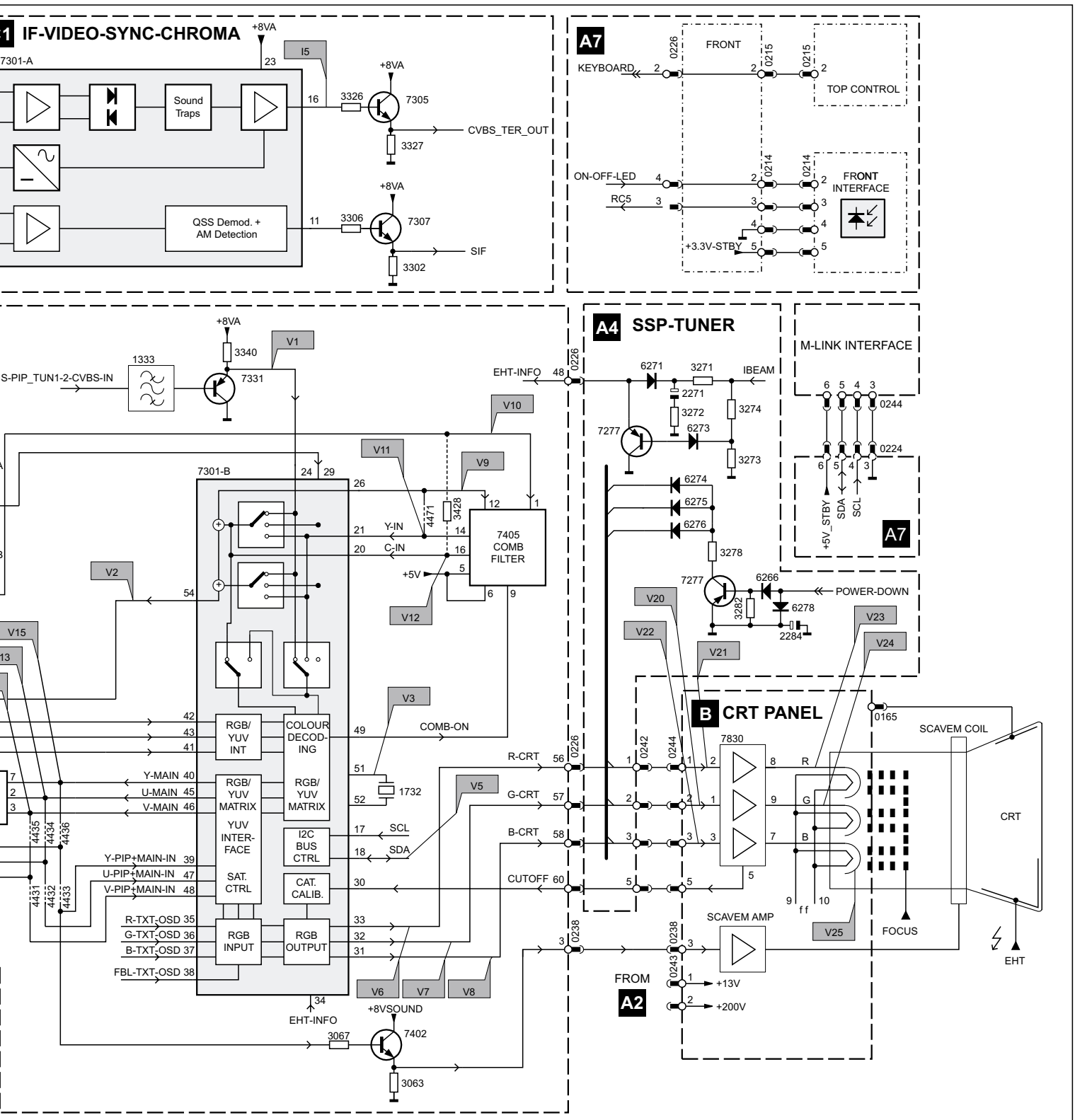

Block diagram: Video

TVC Philips chassis A10E-DPL AA

Spis schematów

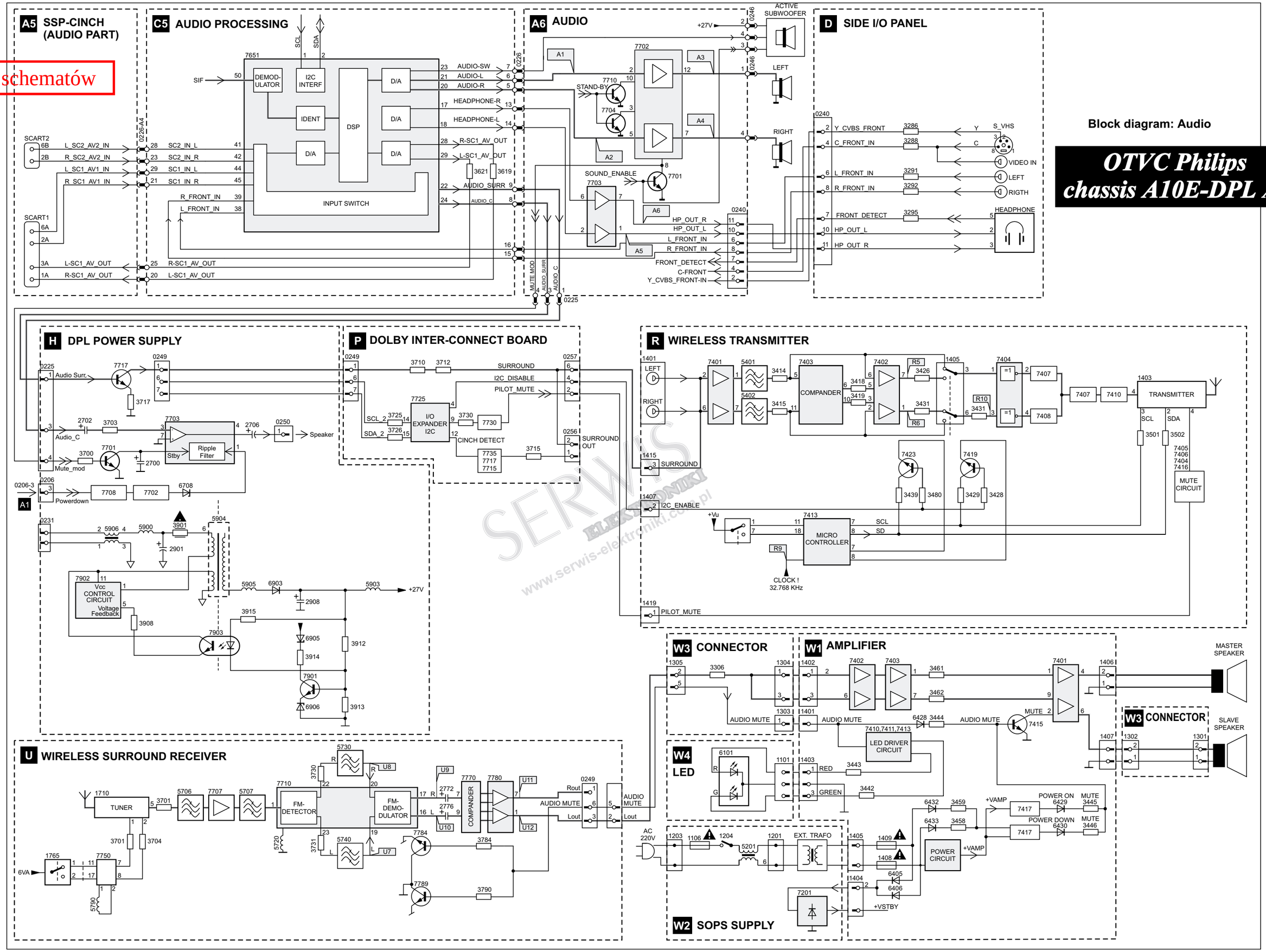

Block diagram: Audio

OTVC Philips chassis A10E-DPL AA

SERWIS ELEKTRONIKI www.serwis-elektroniki.com.pl

Spis schematów

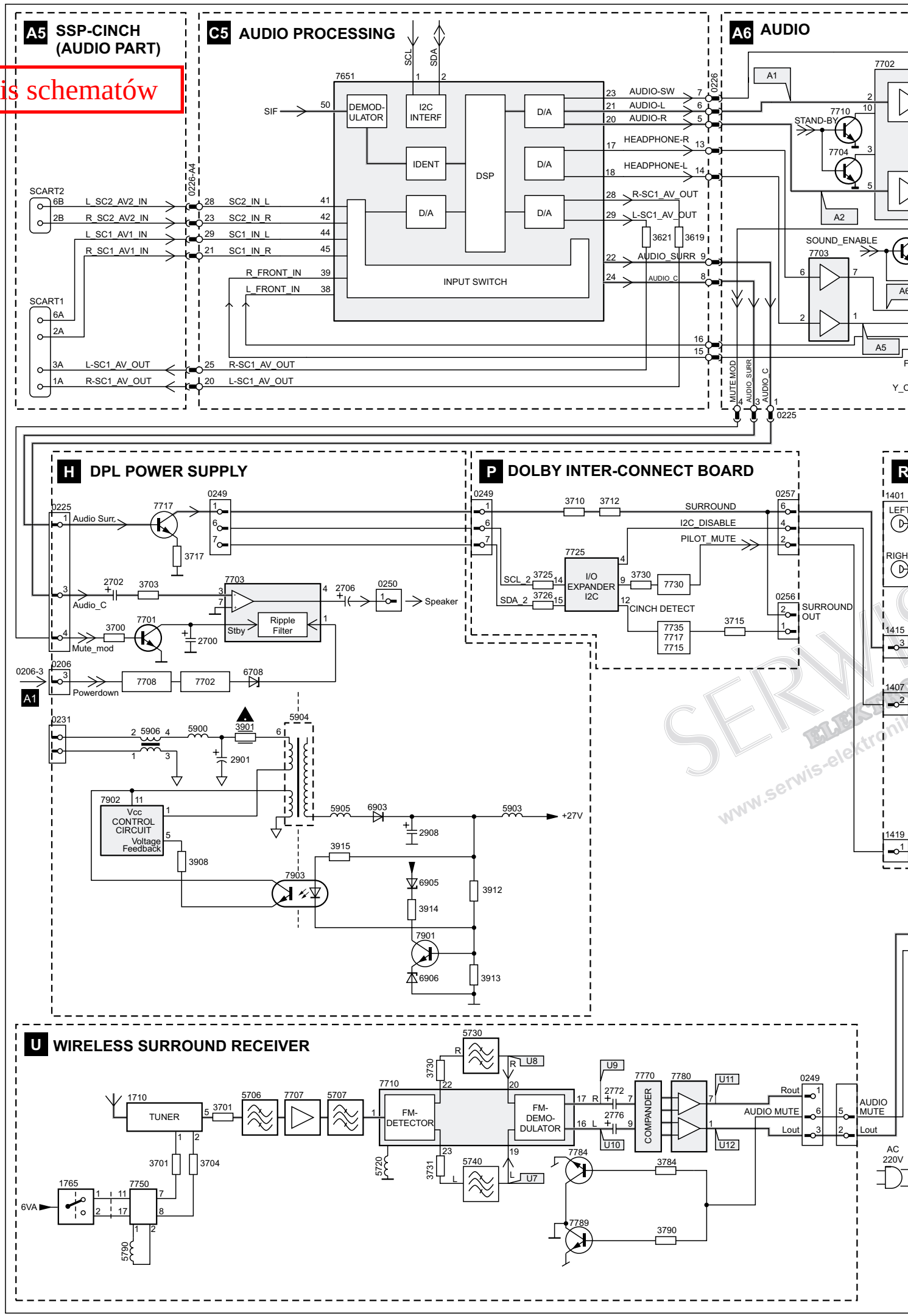

Block diagram: Audio

OTVC Philips chassis A10E-DPL AA

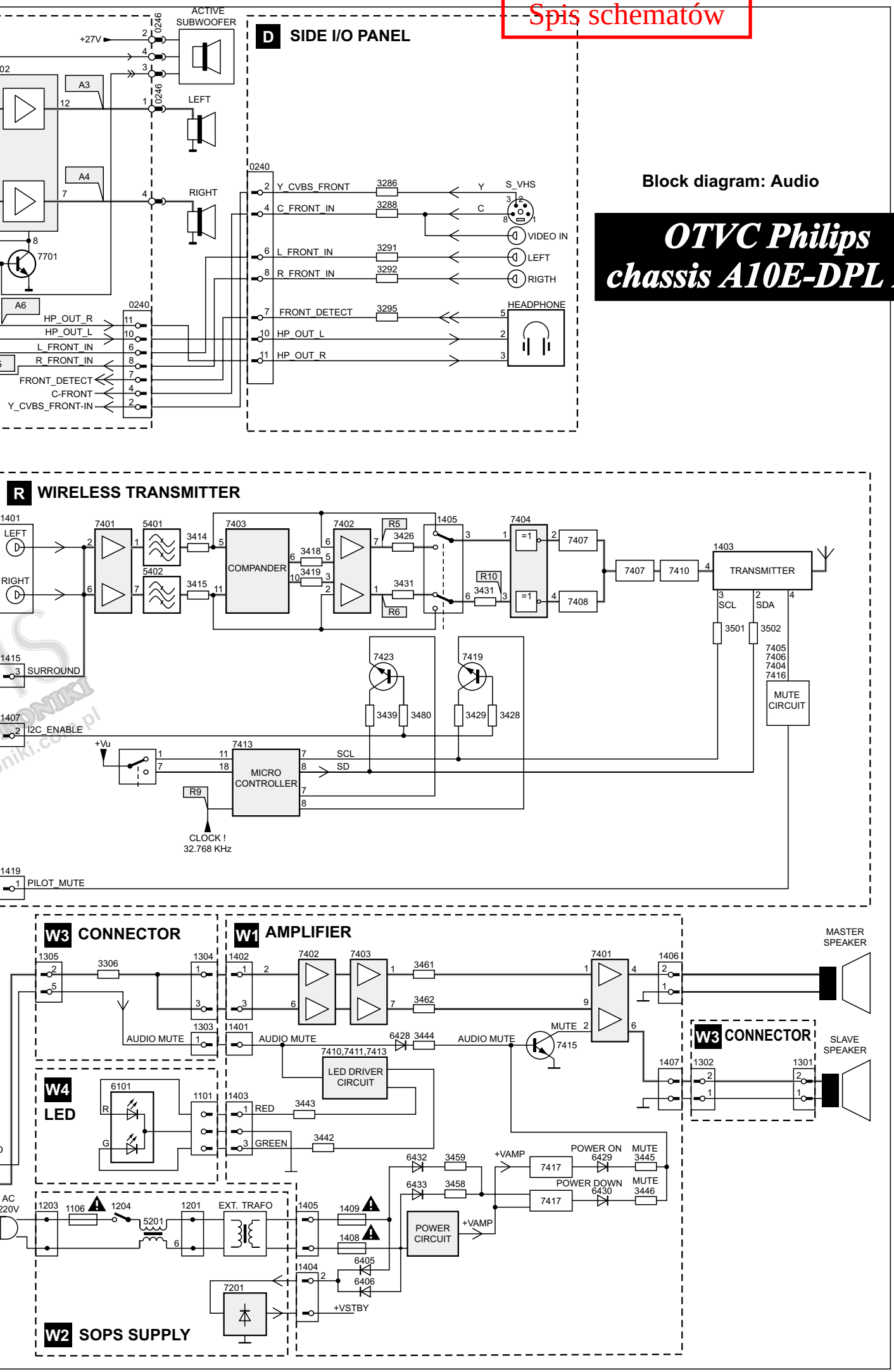

Spis schematów

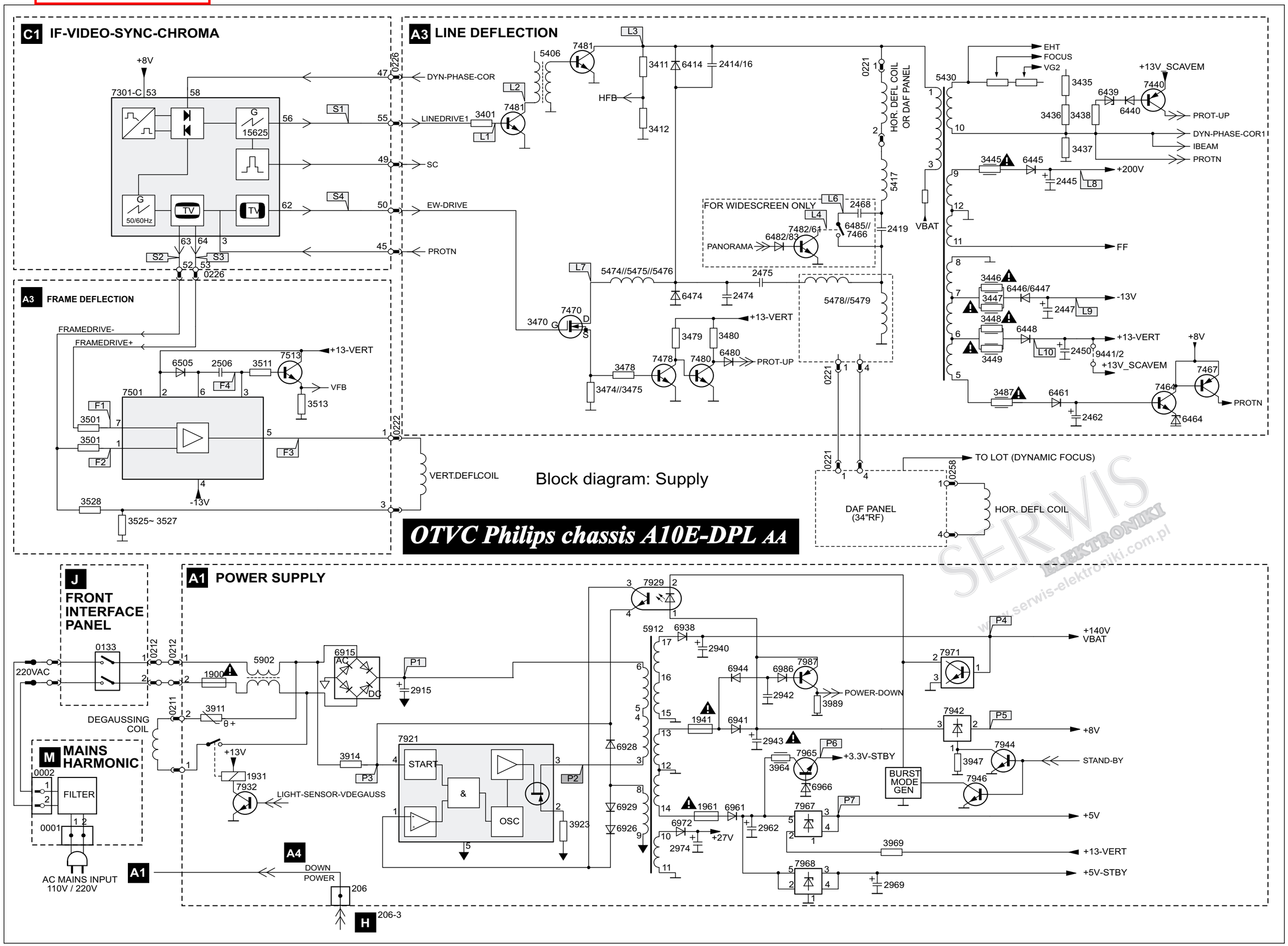

Spis schematów

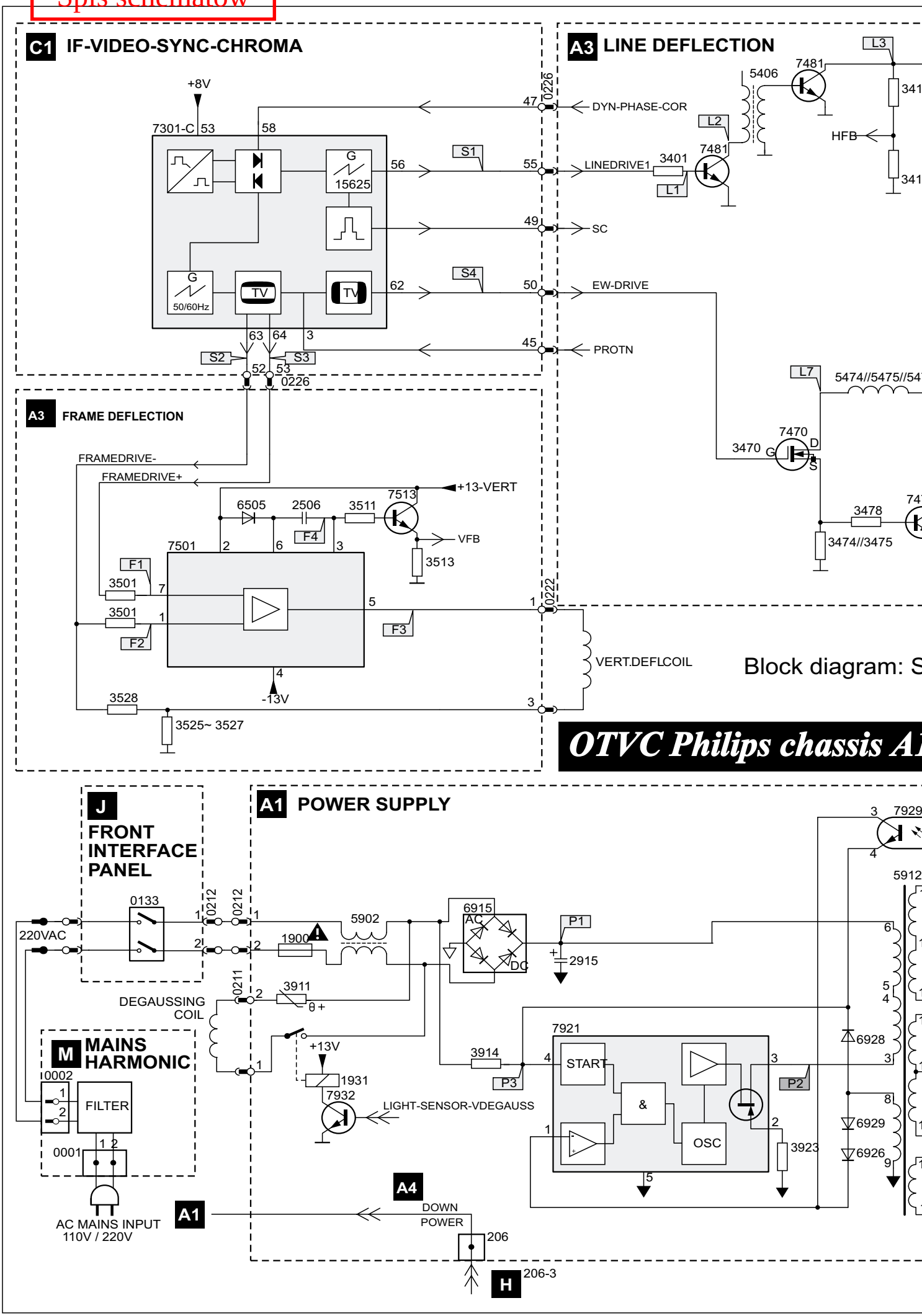

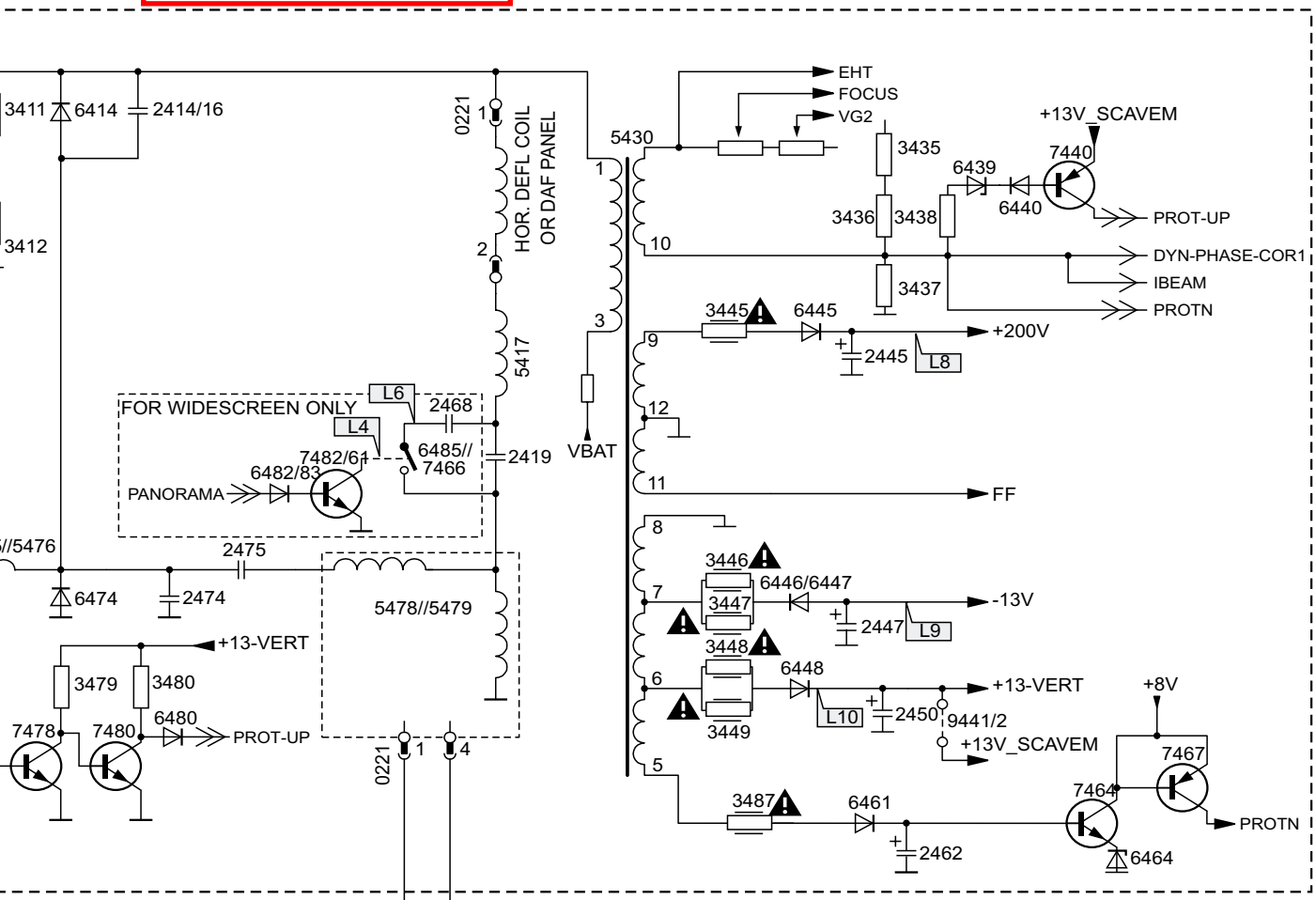

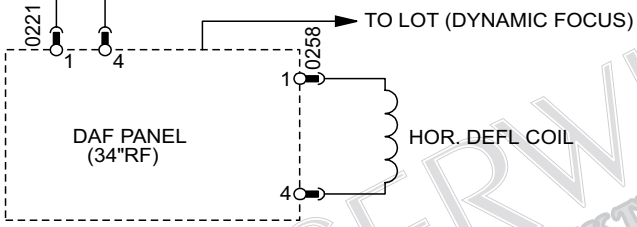

: Supply

A10E-DPL AA

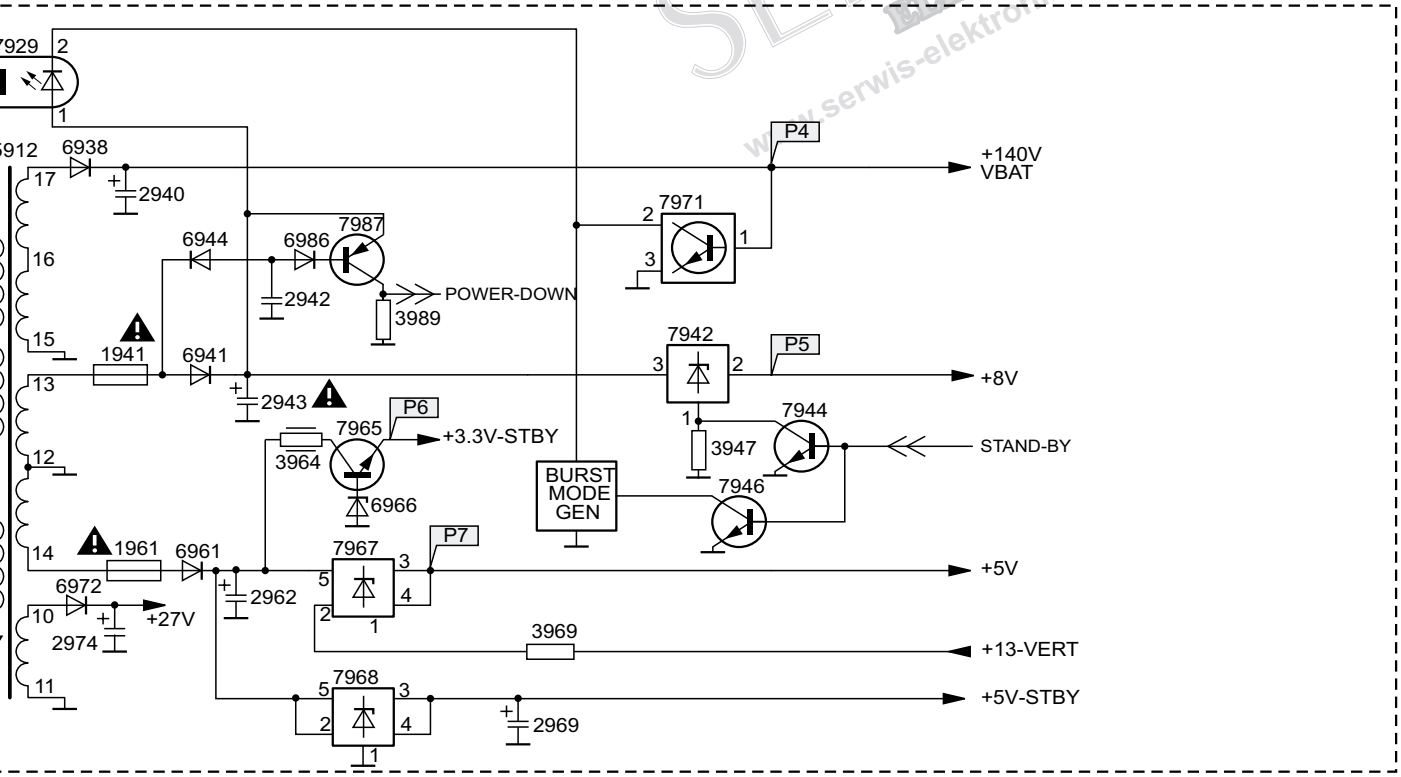

SERWIS ELEKTRONIKI www.serwis-elektroniki.com.pl

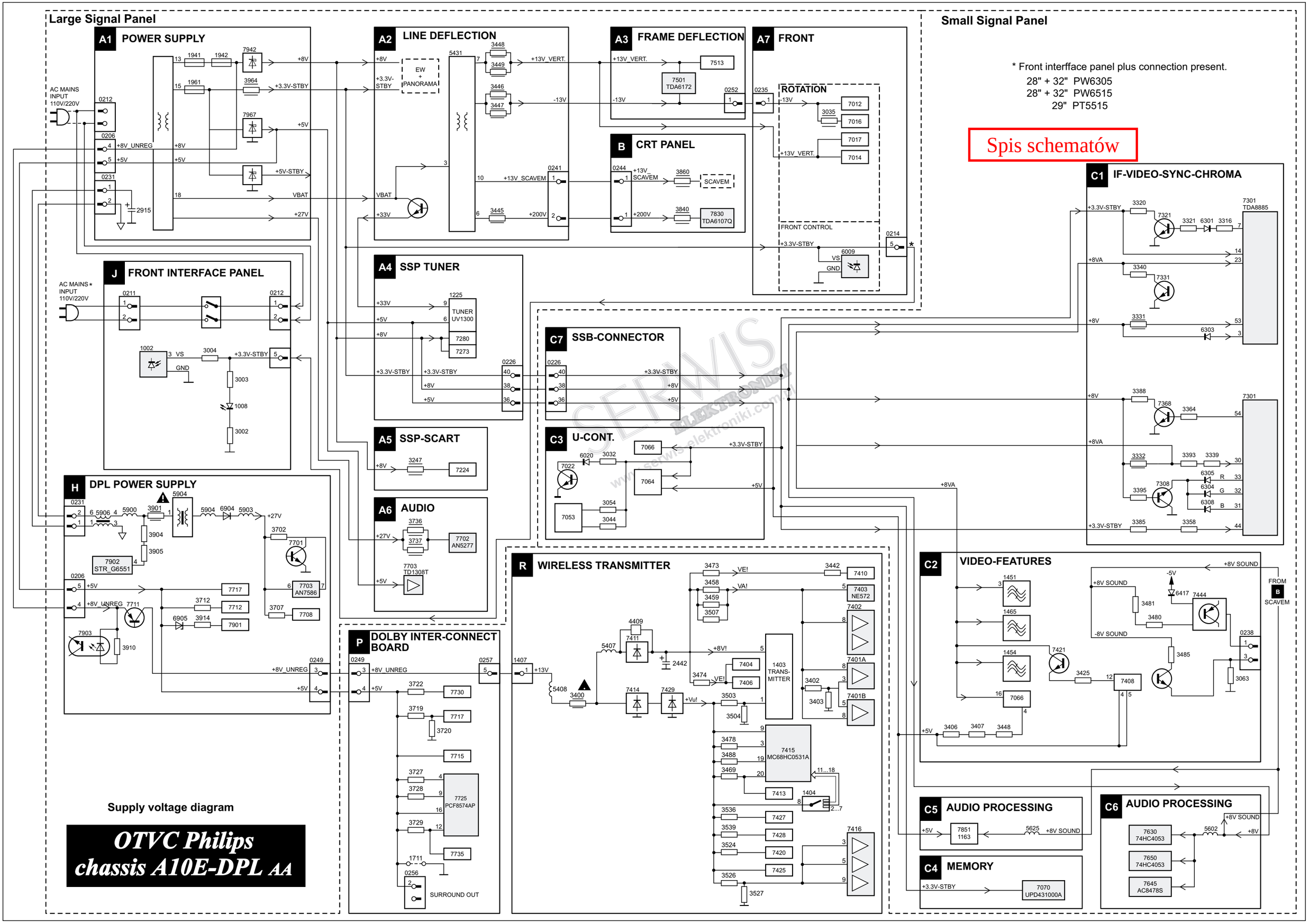
Large Signal Panel
A1 POWER SUPPLY
AC MAINS INPUT 110V/220V
A2 LINE DEFLECTION
EW + PANORAMA
A3 FRAME DEFLECTION
7501 TDA6172
A7 FRONT
ROTATION
FRONT CONTROL
B CRT PANEL
SCAVEM
7830 TDA6107Q
J FRONT INTERFACE PANEL
A4 SSP TUNER
TUNER UV1300
A5 SSP-SCART
A6 AUDIO
7702 AN5277
7703 TD1308T
H DPL POWER SUPPLY
7902 STR_G6551
7703 AN7586
P DOLBY INTER-CONNECT BOARD
7725 PCF8574AP
SURROUND OUT
R WIRELESS TRANSMITTER
1403 TRANS-MITTER
7415 MC68HC0531A
7403 NE572
C7 SSB-CONNECTOR
C3 U-CONT.
Small Signal Panel
* Front interfface panel plus connection present.
28" + 32" PW6305
28" + 32" PW6515
29" PT5515
Spis schematów
C1 IF-VIDEO-SYNC-CHROMA
7301 TDA8885
C2 VIDEO-FEATURES
FROM B SCAVEM
C5 AUDIO PROCESSING
7851 1163
C4 MEMORY
7070 UPD431000A
C6 AUDIO PROCESSING
7630 74HC4053
7650 74HC4053
7645 AC8478S
Supply voltage diagram
OTVC Philips chassis A10E-DPL AA

Spis schematów

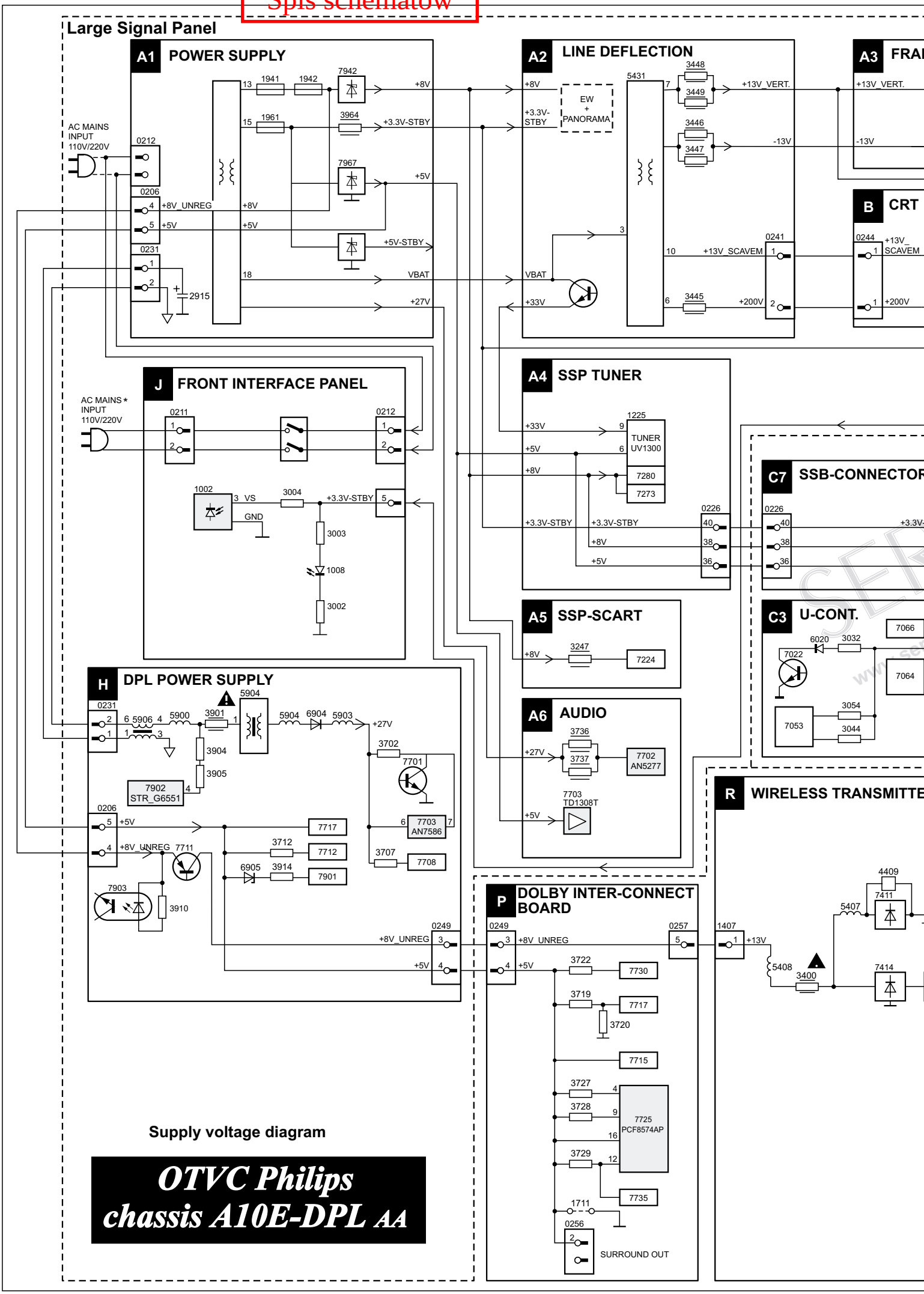

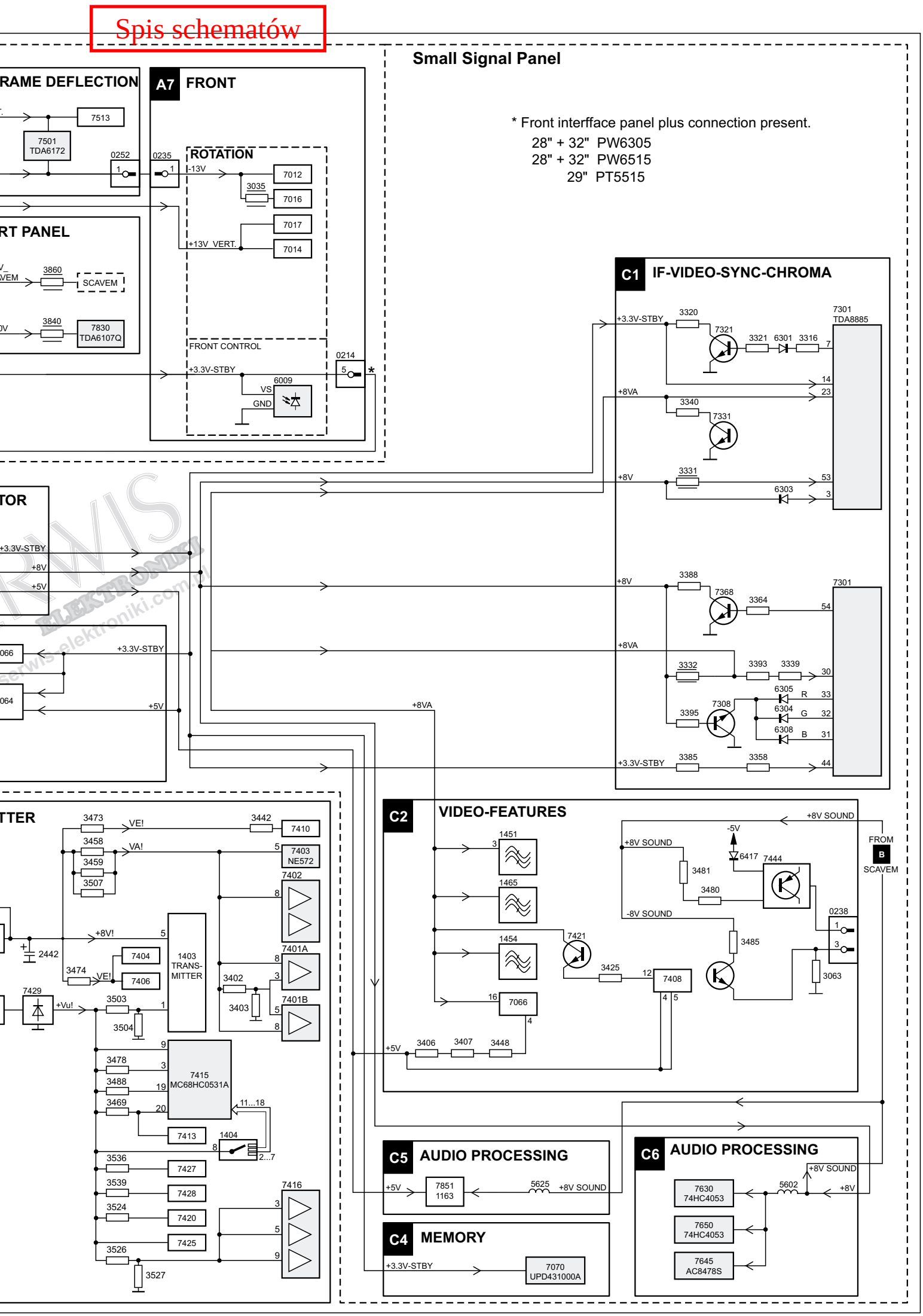
Small Signal Panel
* Front interface panel plus connection present.
28" + 32" PW6305
28" + 32" PW6515
29" PT5515
RAME DEFLECTION
7513
7501
TDA6172
0252
A7 FRONT
0235
ROTATION
-13V
3035
7012
7016
7017
+13V VERT.
7014
RT PANEL
3860
SCAVEM
3840
7830
TDA6107Q
FRONT CONTROL
+3.3V-STBY
6009
VS
GND
0214
C1 IF-VIDEO-SYNC-CHROMA
7301
TDA8885
+3.3V-STBY
3320
7321
3321
6301
3316
+8VA
3340
7331
+8V
3331
6303
3388
7368
3364
7301
3332
3393
3339
6305
R
6304
G
6308
B
7308
3395
3385
3358
TOR
+3.3V-STBY
+8V
+5V
066
064
+8VA
TTER
3473
VE!
3442
7410
3458
VA!
7403
NE572
3459
3507
7402
+8V!
2442
7404
1403
TRANS-
MITTER
3474
7406
7401A
3402
3403
7401B
7429
+Vu!
3503
3504
3478
3488
3469
7415
MC68HC0531A
11...18
7413
1404
2...7
3536
7427
3539
7428
3524
7420
3526
7425
7416
3527
C2 VIDEO-FEATURES
+8V SOUND
FROM
B
SCAVEM
1451
1465
1454
7421
7066
-5V
6417
7444
3481
3480
-8V SOUND
3485
0238
3425
7408
3063
+5V
3406
3407
3448
C5 AUDIO PROCESSING
7851
1163
5625
C4 MEMORY
7070
UPD431000A
C6 AUDIO PROCESSING
7630
74HC4053
5602
7650
74HC4053
7645
AC8478S

Spis schematów

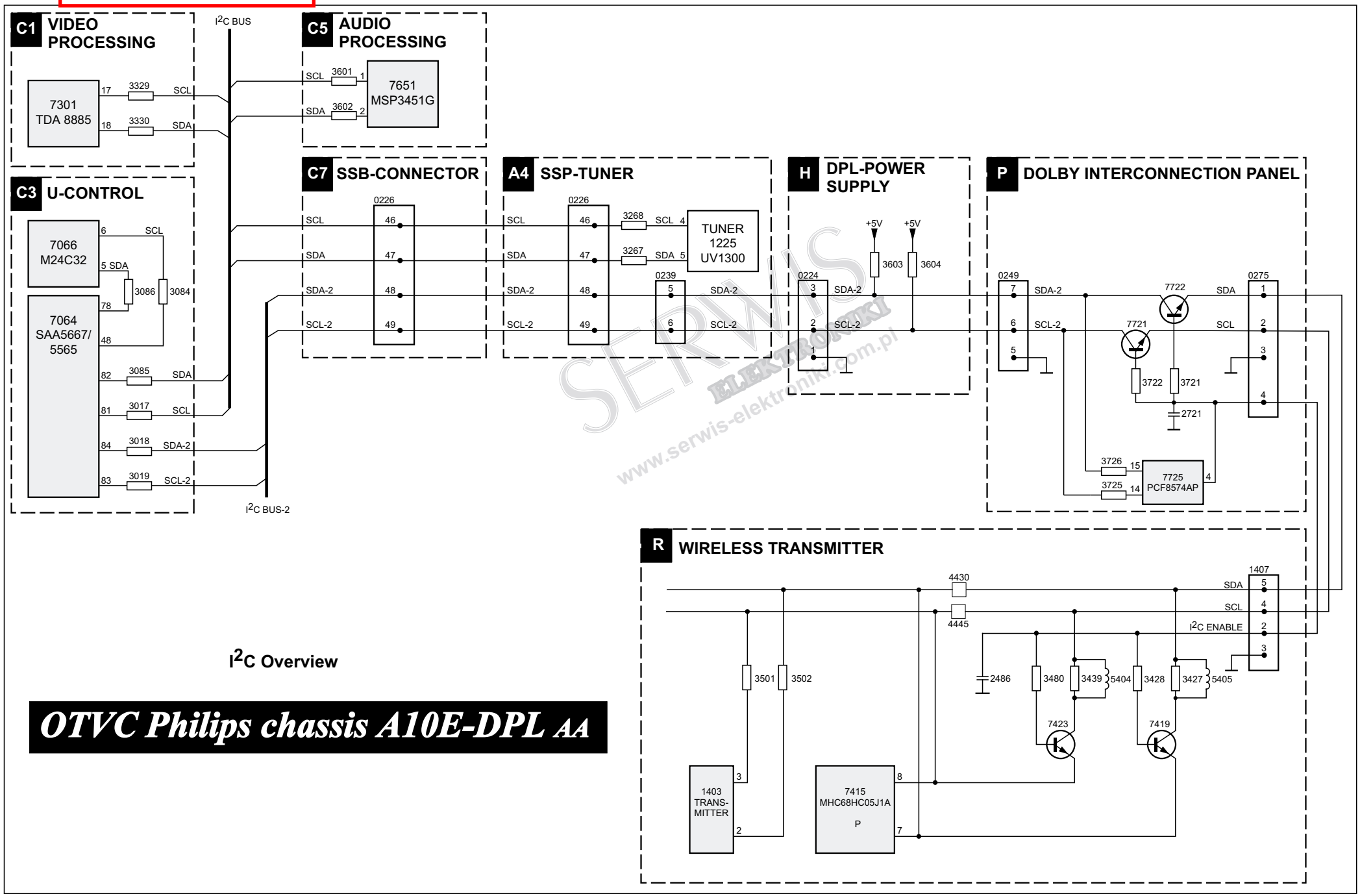

Spis schematów

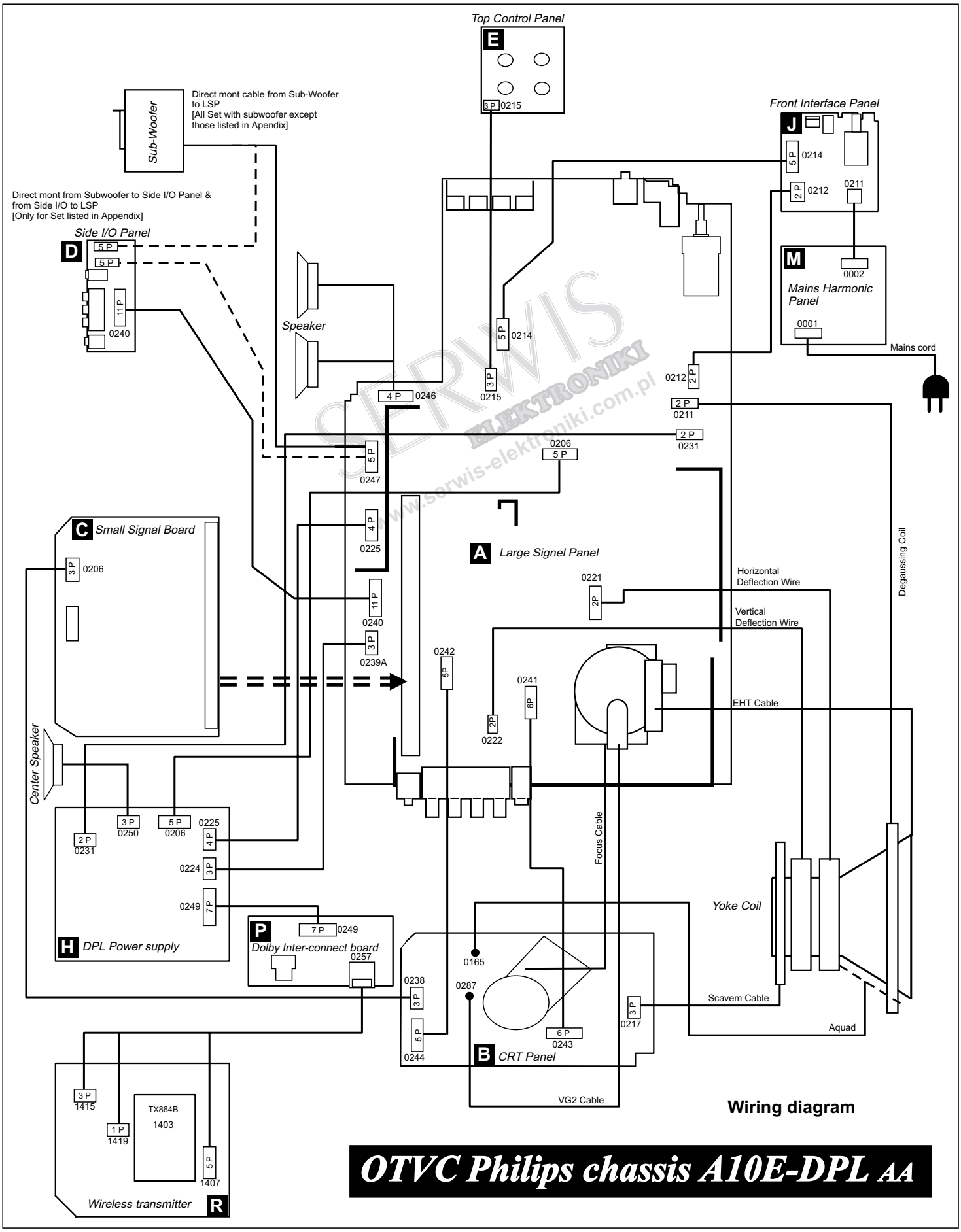

A 1

Large Signal Panel:
POWER SUPPLY

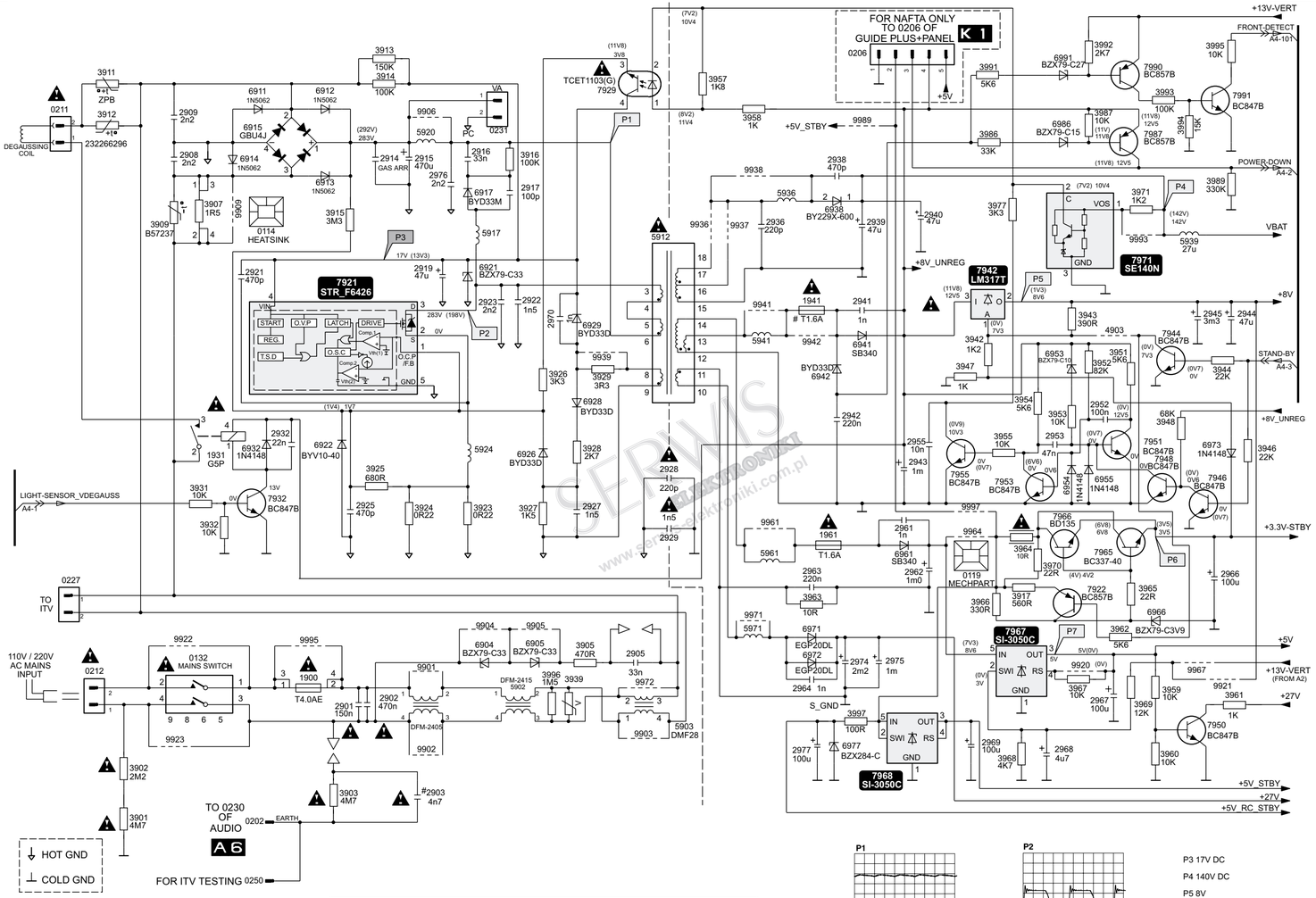

A 1

Diversity table diagram A1

Item no.	RFWS	RFWS W-MHF	AUDIO 10W	AUDIO 10W MHF	AUDIO 30W SW	AUDIO 30W SW MHF	DPL MHF	
0127	X		X		X			Fuse Holder
0132			X	X				Mains switch 2P
1900	X		X		X			Fuse 4A
1931	X		X		X		X	Relay 1P 12V 5A
2902	X		X		X			470nF 20% 275V
2909		X		X		X	X	220pF 10% 1KV
2909	X		X		X			2.2nF 10% 1KV
2974			X					1000uF 20% 35V
2974	X	X		X	X	X	X	2200uF 20% 35V
3901			X	X				4M7 5% 0.5W
3902			X	X				2M2 5% 0.5W
3911							X	9R 220V PTC ZPB
3996	X		X		X			1M5 5% 0.5W
7971	X	X	X	X			X	IC SE140N
7971					X	X		IC SE130N
9922	X	X			X	X	X	Wire
9923	X	X			X	X	X	Wire
9995		X		X		X	X	Wire

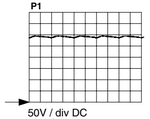

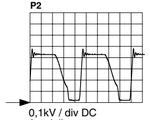

P3 17V DC
P4 140V DC
P5 8V
P6 3V3 DC
P7 5V DC

OTVC Philips chassis A10E-DPL AA

A 1

Large Signal Panel:
POWER SUPPLY

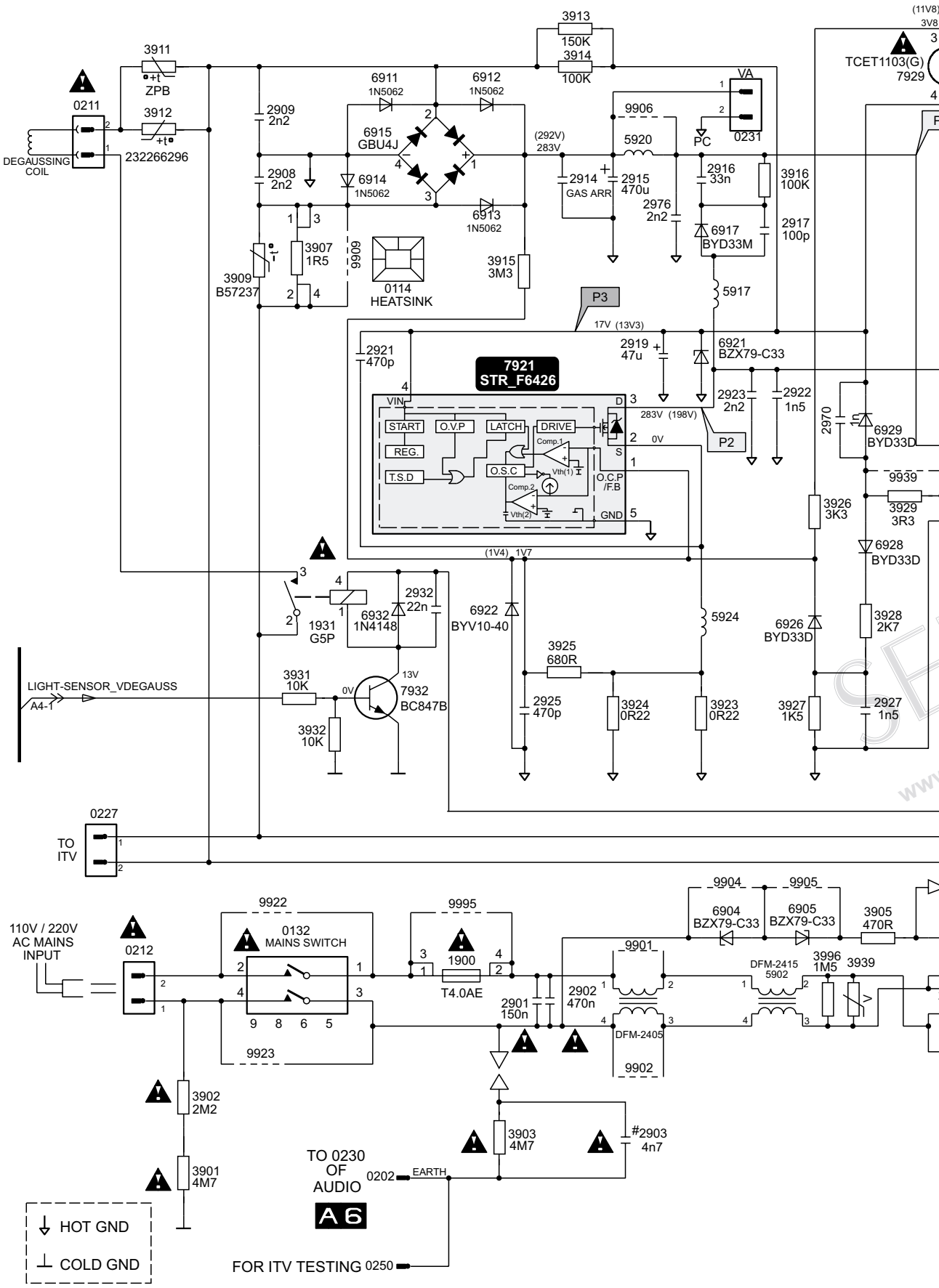

OTVC Philips chassis A10

A 1

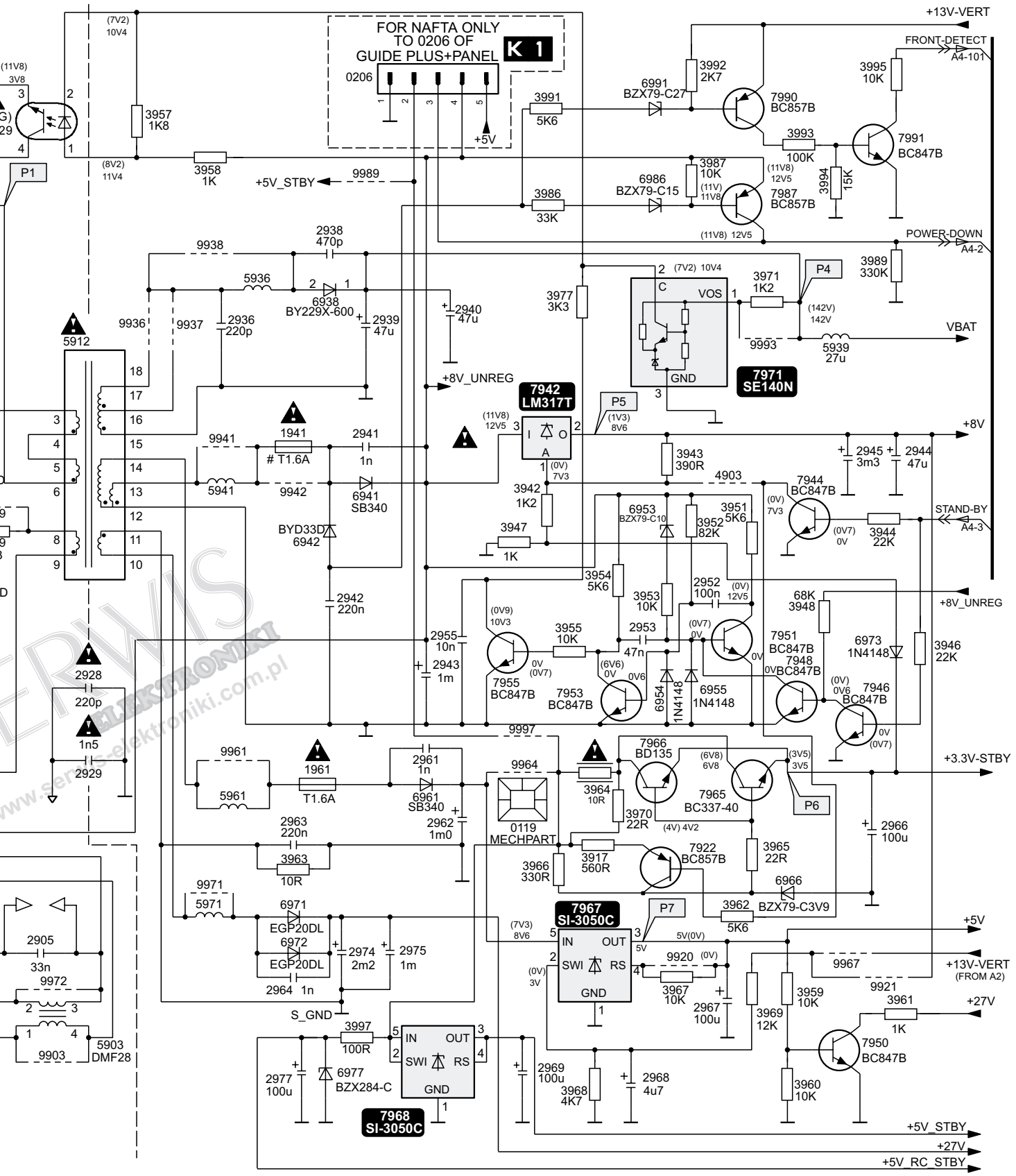

SERWIS ELEKTRONIKI
www.serwis-elektroniki.com.pl

10E-DPL AA

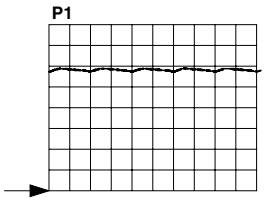

50V / div DC
5ms / div

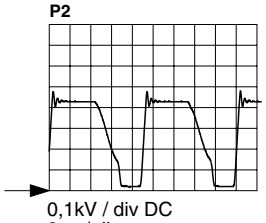

0,1kV / div DC
2µs / div

P3 17V DC

P4 140V DC

P5 8V

P6 3V3 DC

P7 5V DC

Spis schematów

Diversity table diagram A1

Item no.	RFWS	RFWS W-MHF	AUDIO 10W	AUDIO 10W MHF	AUDIO 30W SW	AUDIO 30W SW MHF	DPL MHF	
0127	X		X		X			Fuse Holder
0132			X	X				Mains switch 2P
1900	X		X		X			Fuse 4A
1931	X		X		X		X	Relay 1P 12V 5A
2902	X		X		X			470nF 20% 275V
2909		X		X		X	X	220pF 10% 1KV
2909	X		X		X			2.2nF 10% 1KV
2974			X					1000uF 20% 35V
2974	X	X		X	X	X	X	2200uF 20% 35V
3901			X	X				4M7 5% 0.5W
3902			X	X				2M2 5% 0.5W
3911							X	9R 220V PTC ZPB
3996	X		X		X			1M5 5% 0.5W
7971	X	X	X	X			X	IC SE140N
7971					X	X		IC SE130N
9922	X	X			X	X	X	Wire
9923	X	X			X	X	X	Wire
9995		X		X		X	X	Wire

A2 LINE DEFLECTION

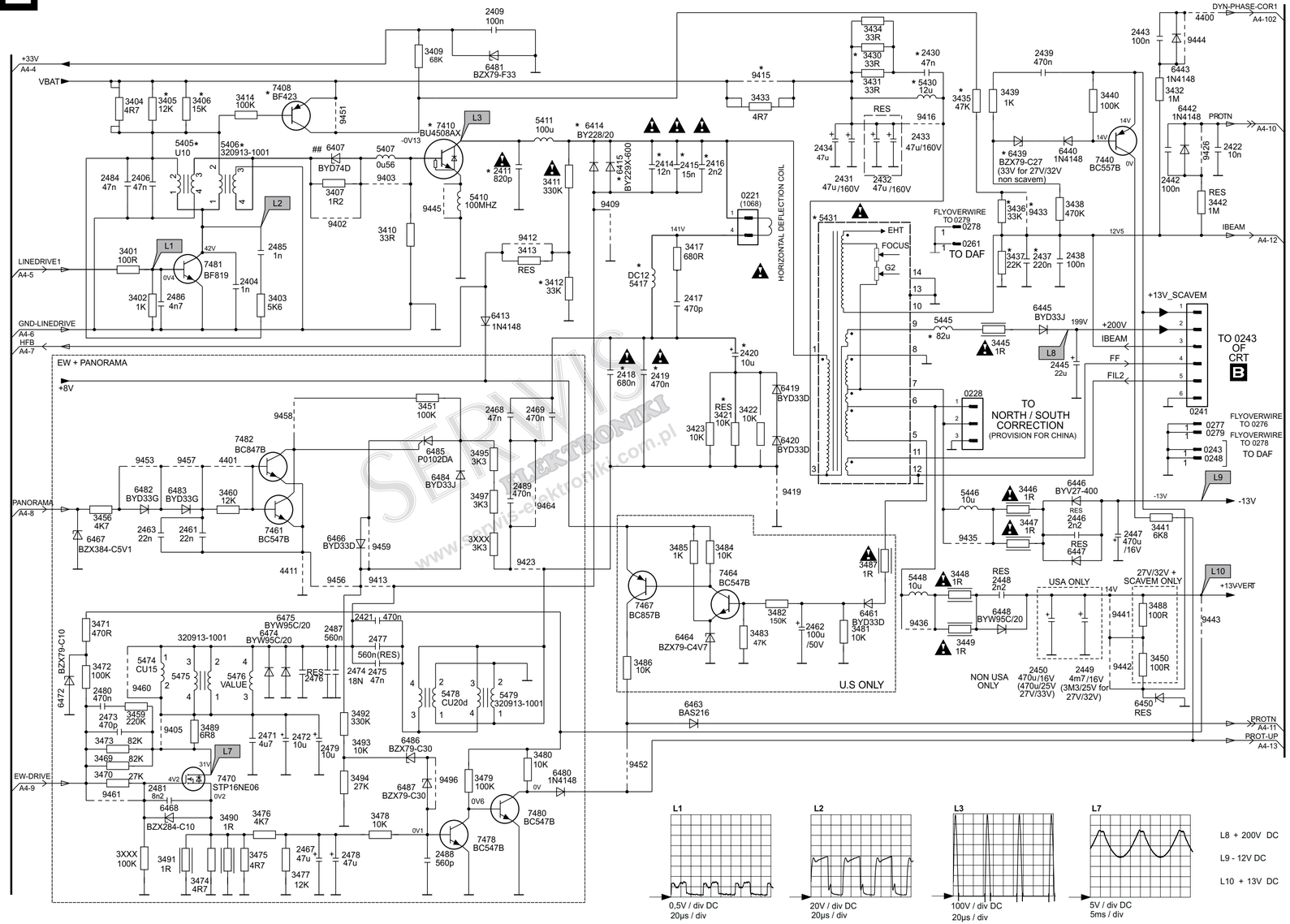

Diversity table diagram A2

Item #	28" BLD WS	32" BLS WS	32" RF WS	24" BLD WS	32" BLS WSThomson	28" BLS WSThomson	29" RF
2271	,	,	,	,	,	,	50V / 1U
2411	,	,	,	1N 2KV	,	,	,
2411	,	,	,	,	,	1N2 2KV	,
2411	1N5 2KV	1N5 2KV	1N5 2KV	,	1N5 2KV	,	,
2411	,	,	,	,	,	,	1N8 2KV
2416	,	,	820P 2K	,	,	,	,
2416	,	1N 2KV	,	,	,	,	,
2416	1N2 2KV	,	,	,	,	,	,
2416	,	,	,	,	,	,	1N5 2KV
2416	,	,	,	,	1N8 2KV	1N8 2KV	,
2416	,	,	,	2N2 2KV	,	,	,
2419	,	,	,	,	,	,	360N 250V
2419	,	,	430N 250V	,	,	,	,
2419	,	,	,	,	,	,	,
2419	680N 2KV	,	,	680N 2KV	,	680N 2KV	,
2419	,	820N 2KV	,	,	820N 2KV	,	,
2420	4U7 2KV	,	,	,	,	4U7 2KV	,
2420	,	2U2 160V	2U2 160V	2U2 160V	2U2 160V	,	2U2 160V
2430	,	27N 50V	27N 50V	,	27N 50V	27N 50V	,
2430	10N 50V	,	,	10N 50V	,	,	,
2430	,	,	,	,	,	,	15N 50V
2437	,	,	,	100N 250V	,	100N 250V	,
2437	150N 250V	,	150N 250V	,	,	,	,
2437	,	220N 250V	,	,	220N 250V	,	220N 250V
2449	470U 16V	470U 16V	470U 16V	470U 16V	470U 16V	470U 16V	,
2449	,	,	,	,	,	,	470U 25V
2474	,	,	,	,	,	,	27N 400V
2474	7N5 1K6V	7N5 1K6V	7N5 1K6V	7N5 1K6V	,	7N5 1K6V	,
2474	,	,	,	,	9N1 1K6V	,	,
2477	430N 250V	430N 250V	430N 250V	430N 250V	,	430N 250V	,
2477	,	,	,	,	470N 250V	,	,
2487	7N5 1K6V	7N5 1K6V	7N5 1K6V	7N5 1K6V	,	7N5 1K6V	,
2487	,	,	,	,	9N1 1K6V	,	,
3272	,	,	,	,	,	,	100K
3403	3K3	3K3	3K3	3K3	3K3	3K3	,
3403	,	,	,	,	,	,	5K6
3405	4K7	,	4K7	4K7	,	,	4K7
3405	,	5K6	,	,	5K6	5K6	,
3430	,	,	,	,	,	,	15R
3430	33R	33R	33R	33R	33R	33R	,
3435	,	27K	,	,	27K	,	,
3435	,	,	39K	,	,	39K	39K
3435	47K	,	,	47K	,	,	,
3436	,	,	,	,	,	39K	39K
3436	,	,	47K	,	,	,	,
3436	,	56K	,	,	56K	,	,
3436	68K	,	,	68K	,	,	,

OTVC Philips chassis A10E-DPL AA

A 2

Spis schematów

LINE DEFLECTION

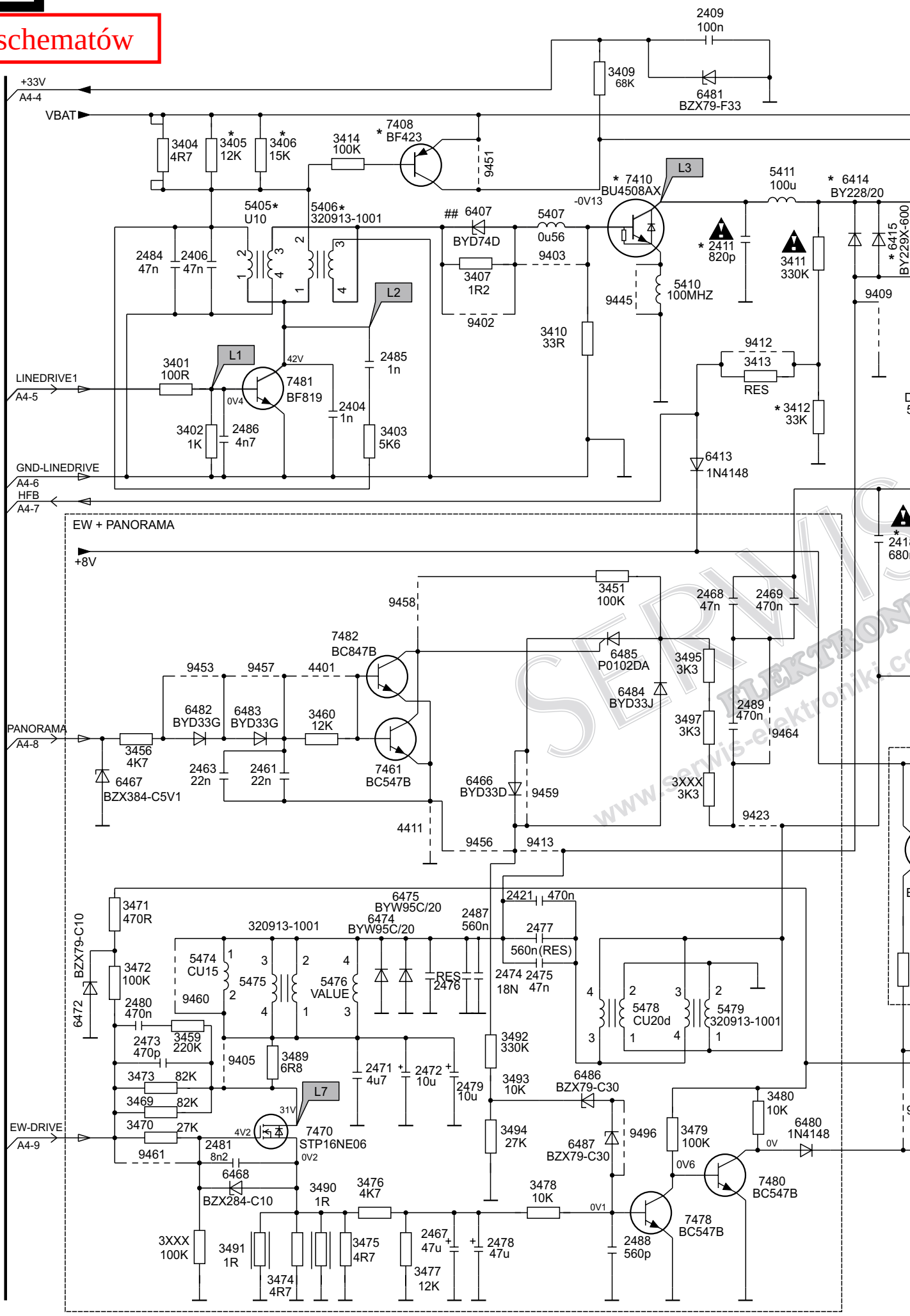

Spis schematów

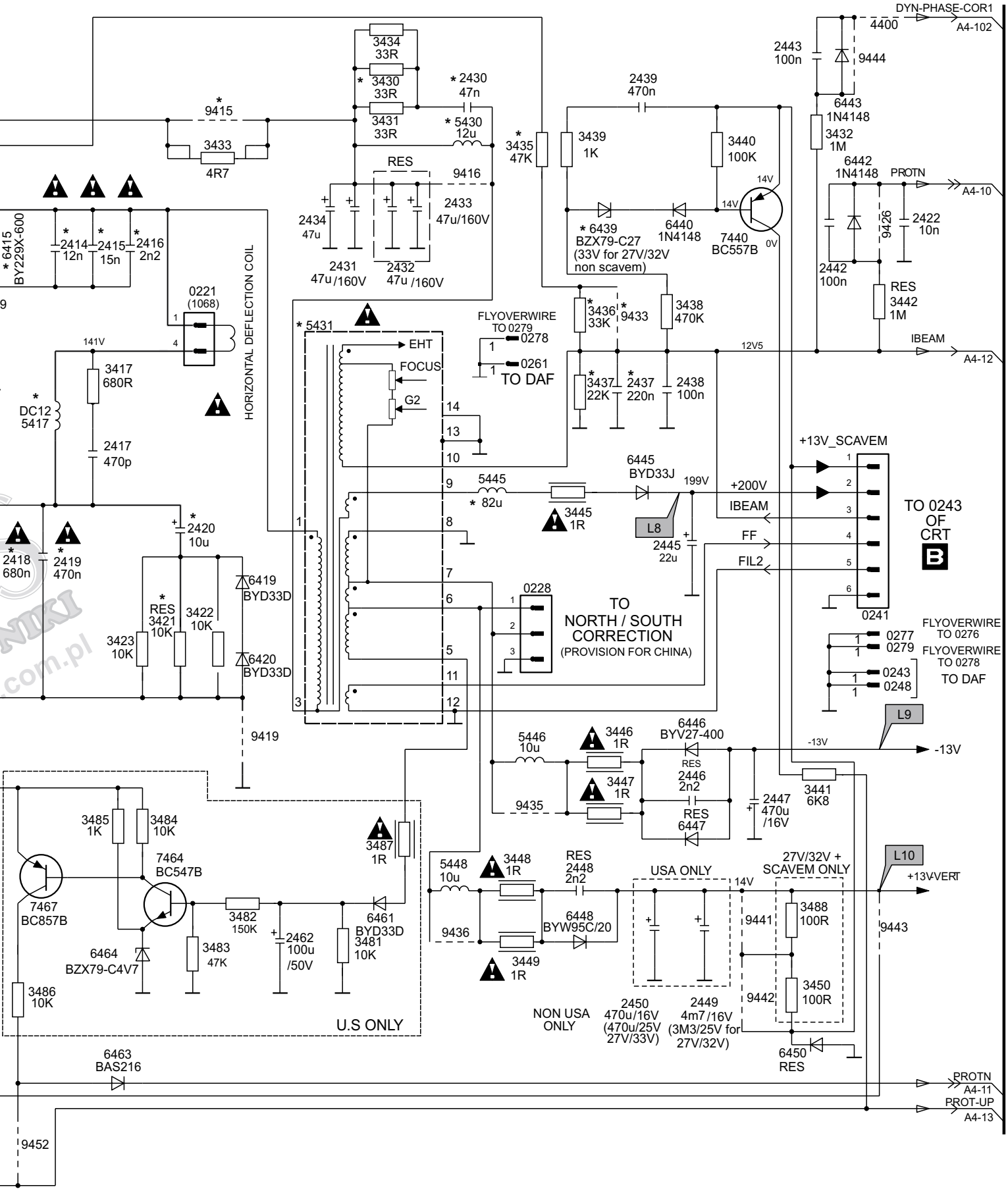

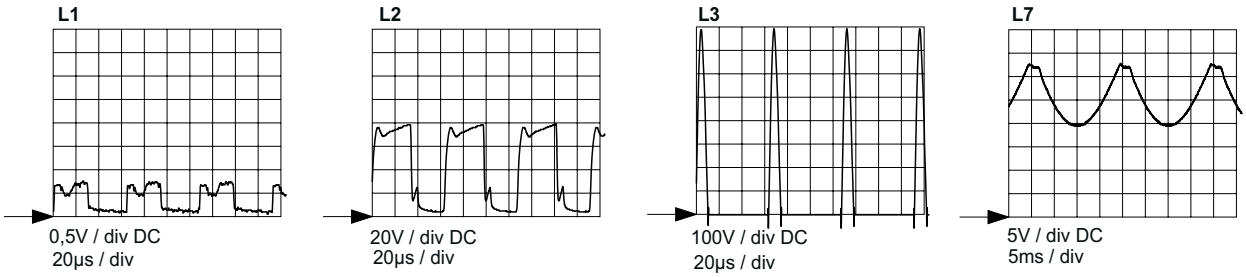

L8 + 200V DC

L9 - 12V DC

L10 + 13V DC

Diversity table diagram A2

Item #	28" BLD WS	32" BLS WS	32" RF WS	24" BLD WS	32" BLS WSThomson	28" BLS WSThomson	29" RF
2271	,	,	,	,	,	,	50V / 1U
2411	,	,	,	1N 2KV	,	,	,
2411	,	,	,	,	,	1N2 2KV	,
2411	1N5 2KV	1N5 2KV	1N5 2KV	,	1N5 2KV	,	,
2411	,	,	,	,	,	,	1N8 2KV
2416	,	,	820P 2K	,	,	,	,
2416	,	1N 2KV	,	,	,	,	,
2416	1N2 2KV	,	,	,	,	,	,
2416	,	,	,	,	,	,	1N5 2KV
2416	,	,	,	,	1N8 2KV	1N8 2KV	,
2416	,	,	,	2N2 2KV	,	,	,
2419	,	,	,	,	,	,	360N 250V
2419	,	,	430N 250V	,	,	,	,
2419	,	,	,	,	,	,	,
2419	680N 2KV	,	,	680N 2KV	,	680N 2KV	,
2419	,	820N 2KV	,	,	820N 2KV	,	,
2420	4U7 2KV	,	,	,	,	4U7 2KV	,
2420	,	2U2 160V	2U2 160V	2U2 160V	2U2 160V	,	2U2 160V
2430	,	27N 50V	27N 50V	,	27N 50V	27N 50V	,
2430	10N 50V	,	,	10N 50V	,	,	,
2430	,	,	,	,	,	,	15N 50V
2437	,	,	,	100N 250V	,	100N 250V	,
2437	150N 250V	,	150N 250V	,	,	,	,
2437	,	220N 250V	,	,	220N 250V	,	220N 250V
2449	470U 16V	470U 16V	470U 16V	470U 16V	470U 16V	470U 16V	,
2449	,	,	,	,	,	,	470U 25V
2474	,	,	,	,	,	,	27N 400V
2474	7N5 1K6V	7N5 1K6V	7N5 1K6V	7N5 1K6V	,	7N5 1K6V	,
2474	,	,	,	,	9N1 1K6V	,	,
2477	430N 250V	430N 250V	430N 250V	430N 250V	,	430N 250V	,
2477	,	,	,	,	470N 250V	,	,
2487	7N5 1K6V	7N5 1K6V	7N5 1K6V	7N5 1K6V	,	7N5 1K6V	,
2487	,	,	,	,	9N1 1K6V	,	,
3272	,	,	,	,	,	,	100K
3403	3K3	3K3	3K3	3K3	3K3	3K3	,
3403	,	,	,	,	,	,	5K6
3405	4K7	,	4K7	4K7	,	,	4K7
3405	,	5K6	,	,	5K6	5K6	,
3430	,	,	,	,	,	,	15R
3430	33R	33R	33R	33R	33R	33R	,
3435	,	27K	,	,	27K	,,	
3435	,	,	39K	,	,	39K	39K
3435	47K	,	,	47K	,	,	,
3436	,	,	,	,	,	39K	39K
3436	,	,	47K	,	,	,	,
3436	,	56K	,	,	56K	,	,
3436	68K	,	,	68K	,	,	,

SERWIS ELEKTRONIKI www.serwis-elektroniki.com.pl

OTVC Philips chassis A10E-DPL AA

A 3

Item #	28" BLD WS	32" BLS WS	32" RF WS	24" BLD WS	32" BLS WSThomson	28" BLS WSThomson	29" RF
2271	,	,	,	,	,	,	50V / 1U
2411	,	,	,	1N 2KV	,	,	,
2411	,	,	,	,	,	1N2 2KV	,
2411	1N5 2KV	1N5 2KV	1N5 2KV	,	1N5 2KV	,	,
2411	,	,	,	,	,	,	1N8 2KV
2416	,	,	820P 2KV	,	,	,	,
2416	,	1N 2KV	,	,	,	,	,
2416	1N2 2KV	,	,	,	,	,	,
2416	,	,	,	,	,	,	1N5 2KV
2416	,	,	,	,	1N8 2KV	1N8 2KV	,
2416	,	,	,	2N2 2KV	,	,	,
2419	,	,	,	,	,	,	360N 250V
2419	,	,	430N 250V	,	,	,	,
2419	,	,	,	,	,	,	,
2419	680N 2KV	,	,	680N 2KV	,	680N 2KV	,
2419	,	820N 2KV	,	,	820N 2KV	,	,
2420	4U7 2KV	,	,	,	,	4U7 2KV	,
2420	,	2U2 160V	2U2 160V	2U2 160V	2U2 160V	,	2U2 160V
2430	,	27N 50V	27N 50V	,	27N 50V	27N 50V	,
2430	10N 50V	,	,	10N 50V	,	,	,
2430	,	,	,	,	,	,	15N 50V
2437	,	,	,	100N 250V	,	100N 250V	,
2437	150N 250V	,	150N 250V	,	,	,	,
2437	,	220N 250V	,	,	220N 250V	,	220N 250V
2449	470U 16V	470U 16V	470U 16V	470U 16V	470U 16V	470U 16V	,
2449	,	,	,	,	,	,	470U 25V
2474	,	,	,	,	,	,	27N 400V
2474	7N5 1K6V	7N5 1K6V	7N5 1K6V	7N5 1K6V	,	7N5 1K6V	,
2474	,	,	,	,	9N1 1K6V	,	,
2477	430N 250V	430N 250V	430N 250V	430N 250V	,	430N 250V	,
2477	,	,	,	,	470N 250V	,	,
2487	7N5 1K6V	7N5 1K6V	7N5 1K6V	7N5 1K6V	,	7N5 1K6V	,
2487	,	,	,	,	9N1 1K6V	,	,
3272	,	,	,	,	,	,	100K
3403	3K3	3K3	3K3	3K3	3K3	3K3	,
3403	,	,	,	,	,	,	5K6
3405	4K7	,	4K7	4K7	,	,	4K7
3405	,	5K6	,	,	5K6	5K6	,
3430	,	,	,	,	,	,	15R
3430	33R	33R	33R	33R	33R	33R	,
3435	,	27K	,	,	27K	,	,
3435	,	,	39K	,	,	39K	39K
3435	47K	,	,	47K	,	,	,
3436	,	,	,	,	,	39K	39K
3436	,	,	47K	,	,	,	,
3436	,	56K	,	,	56K	,	,
3436	68K	,	,	68K	,	,	,

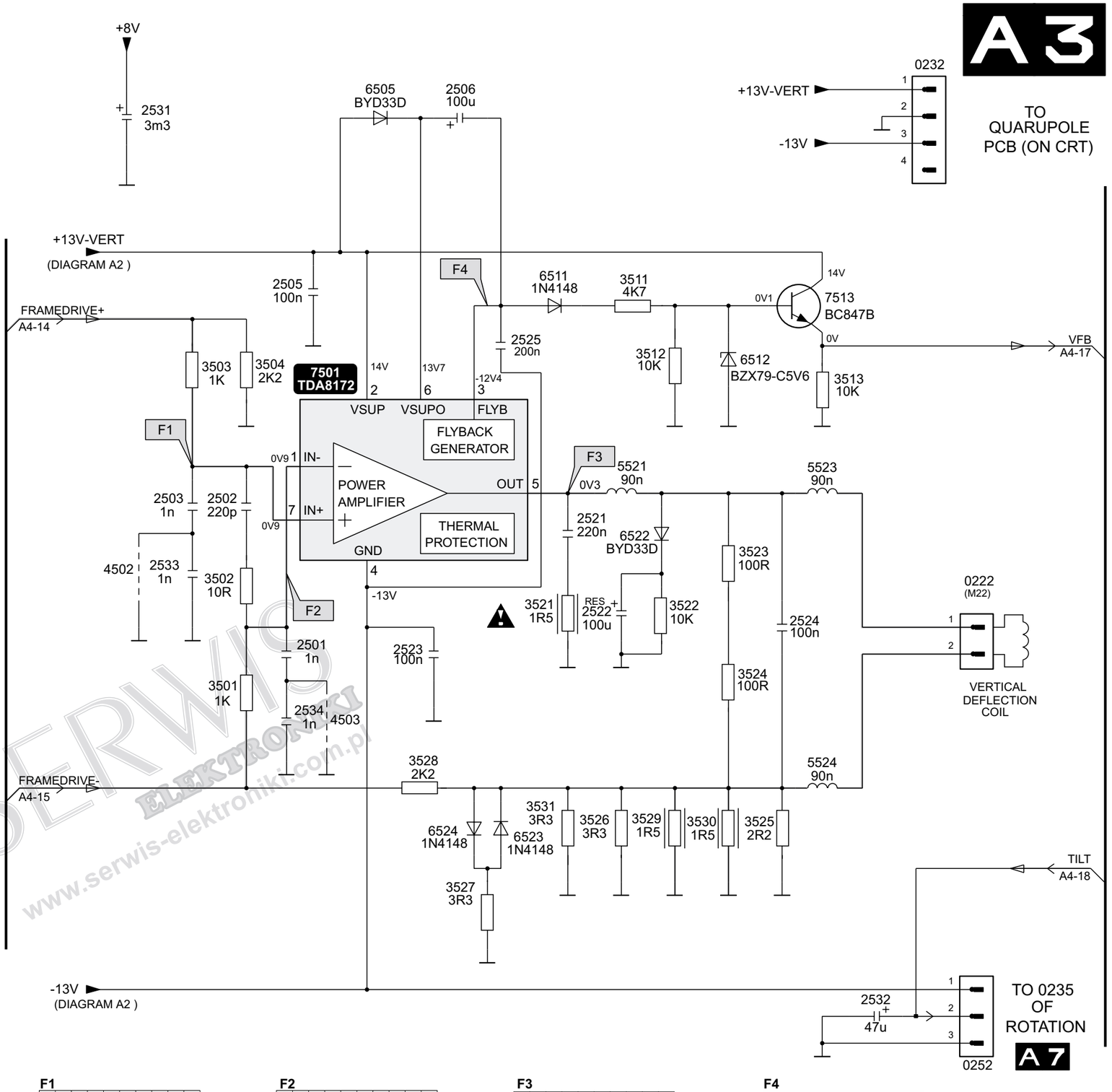

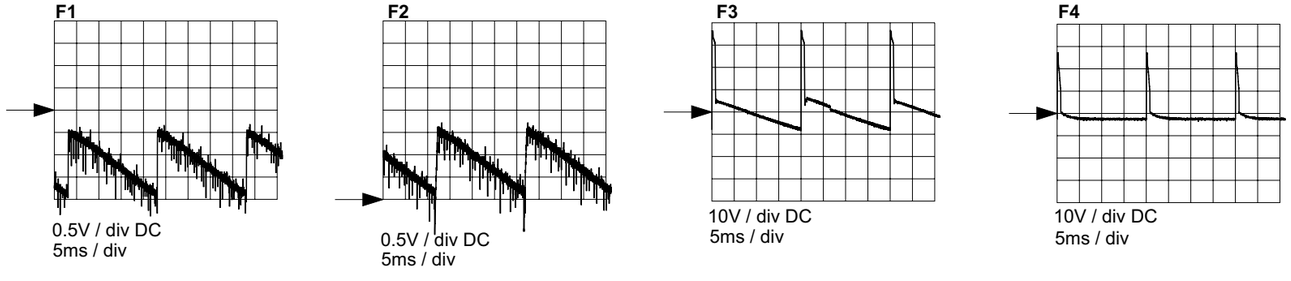

FRAME DEFLECTION

OTVC Philips chassis A10E-DPL AA

SERWIS ELEKTRONIKI www.serwis-elektroniki.com.pl

A3

Item #	28" BLD WS	32" BLS WS	32" RF WS	24" BLD WS	32" BLS WSThomson	28" BLS WSThomson	29" RF
2271	,	,	,	,	,	,	50V / 1U
2411	,	,	,	1N 2KV	,	,	,
2411	,	,	,	,	,	1N2 2KV	,
2411	1N5 2KV	1N5 2KV	1N5 2KV	,	1N5 2KV	,	,
2411	,	,	,	,	,	,	1N8 2KV
2416	,	,	820P 2KV	,	,	,	,
2416	,	1N 2KV	,	,	,	,	,
2416	1N2 2KV	,	,	,	,	,	,
2416	,	,	,	,	,	,	1N5 2KV
2416	,	,	,	,	1N8 2KV	1N8 2KV	,
2416	,	,	,	2N2 2KV	,	,	,
2419	,	,	,	,	,	,	360N 250V
2419	,	,	430N 250V	,	,	,	,
2419	,	,	,	,	,	,	,
2419	680N 2KV	,	,	680N 2KV	,	680N 2KV	,
2419	,	820N 2KV	,	,	820N 2KV	,	,
2420	4U7 2KV	,	,	,	,	4U7 2KV	,
2420	,	2U2 160V	2U2 160V	2U2 160V	2U2 160V	,	2U2 160V
2430	,	27N 50V	27N 50V	,	27N 50V	27N 50V	,
2430	10N 50V	,	,	10N 50V	,	,	,
2430	,	,	,	,	,	,	15N 50V
2437	,	,	,	100N 250V	,	100N 250V	,
2437	150N 250V	,	150N 250V	,	,	,	,
2437	,	220N 250V	,	,	220N 250V	,	220N 250V
2449	470U 16V	470U 16V	470U 16V	470U 16V	470U 16V	470U 16V	,
2449	,	,	,	,	,	,	470U 25V
2474	,	,	,	,	,	,	27N 400V
2474	7N5 1K6V	7N5 1K6V	7N5 1K6V	7N5 1K6V	,	7N5 1K6V	,
2474	,	,	,	,	9N1 1K6V	,	,
2477	430N 250V	430N 250V	430N 250V	430N 250V	,	430N 250V	,
2477	,	,	,	,	470N 250V	,	,
2487	7N5 1K6V	7N5 1K6V	7N5 1K6V	7N5 1K6V	,	7N5 1K6V	,
2487	,	,	,	,	9N1 1K6V	,	,
3272	,	,	,	,	,	,	100K
3403	3K3	3K3	3K3	3K3	3K3	3K3	,
3403	,	,	,	,	,	,	5K6
3405	4K7	,	4K7	4K7	,	,	4K7
3405	,	5K6	,	,	5K6	5K6	,
3430	,	,	,	,	,	,	15R
3430	33R	33R	33R	33R	33R	33R	,
3435	,	27K	,	,	27K	,	,
3435	,	,	39K	,	,	39K	39K
3435	47K	,	,	47K	,	,	,
3436	,	,	,	,	,	39K	39K
3436	,	,	47K	,	,	,	,
3436	,	56K	,	,	56K	,	,
3436	68K	,	,	68K	,	,	,

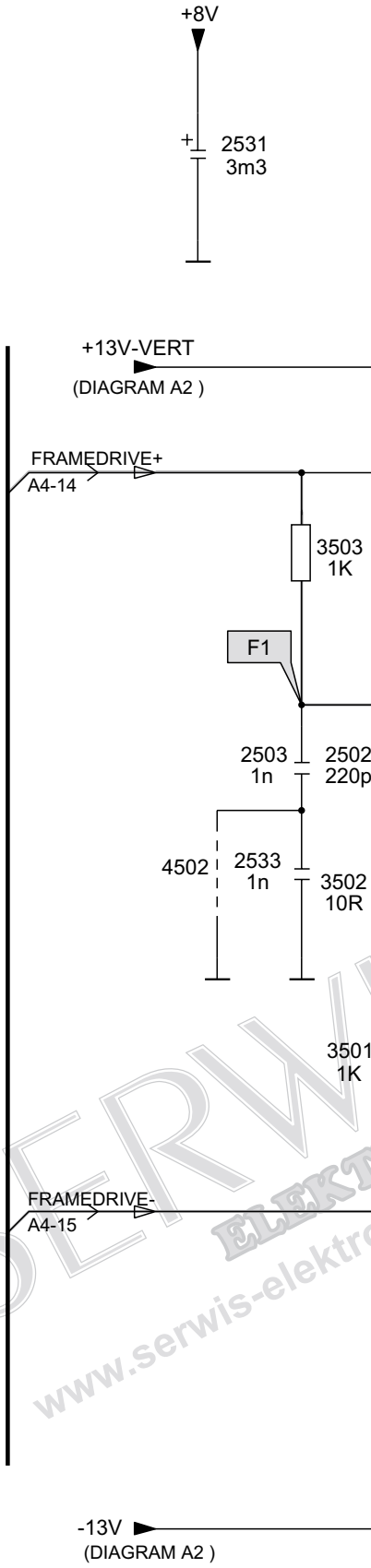

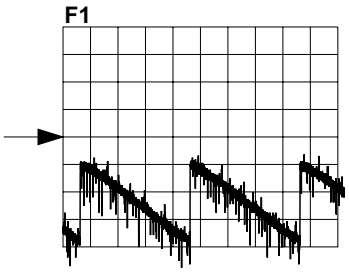

FRAME DEFLECTION

OTVC Philips chassis A10E-DPL AA

SERWIS ELEKTRONIKI
www.serwis-elektroniki

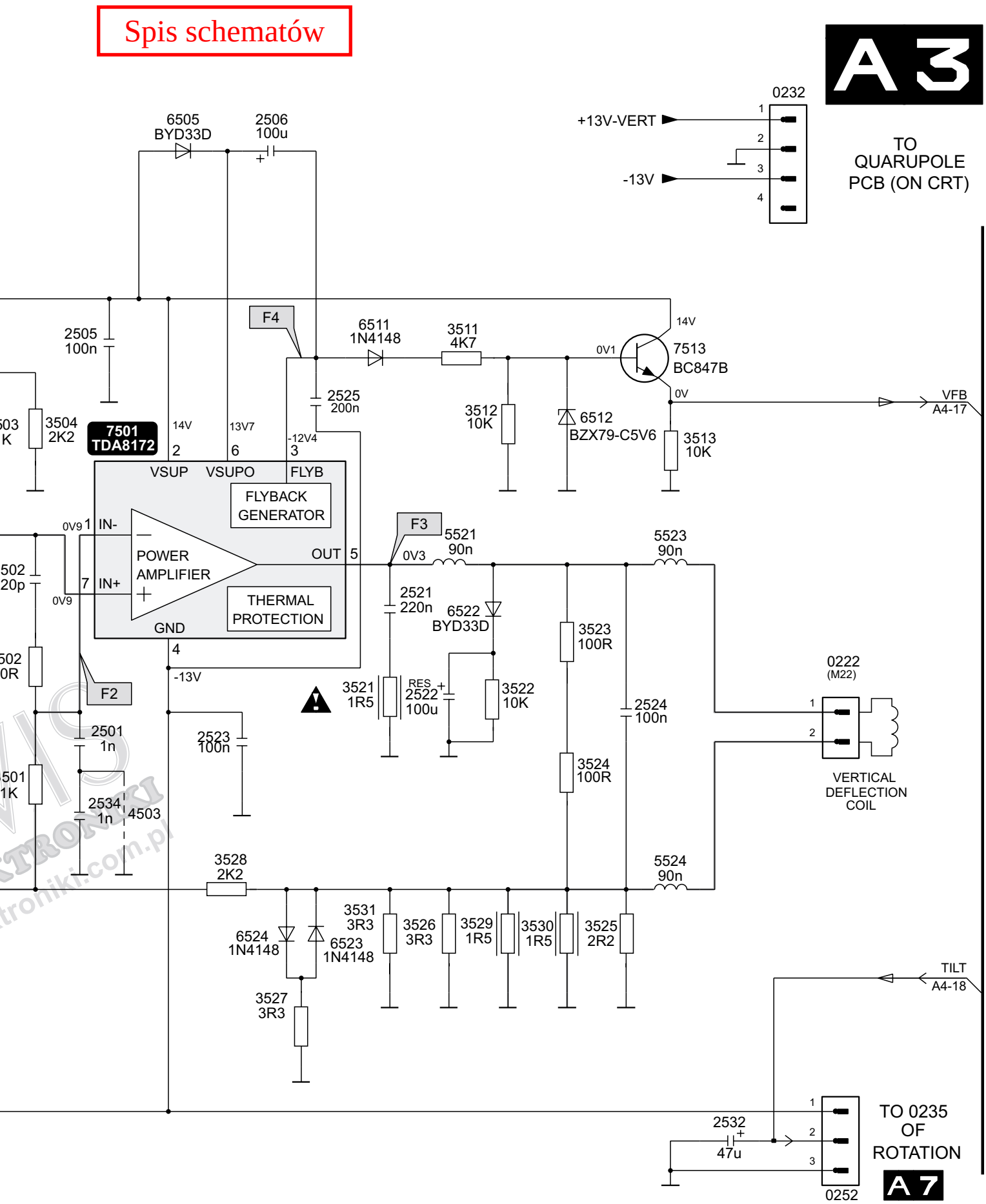

F2

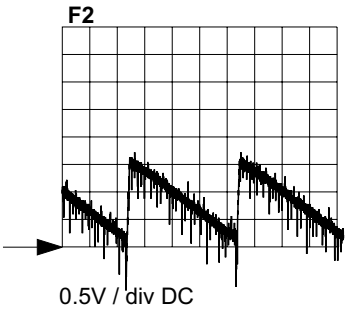

0.5V / div DC
5ms / div

F3

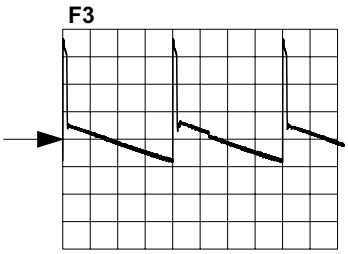

10V / div DC
5ms / div

F4

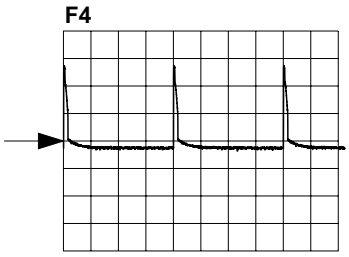

10V / div DC
5ms / div

A 4

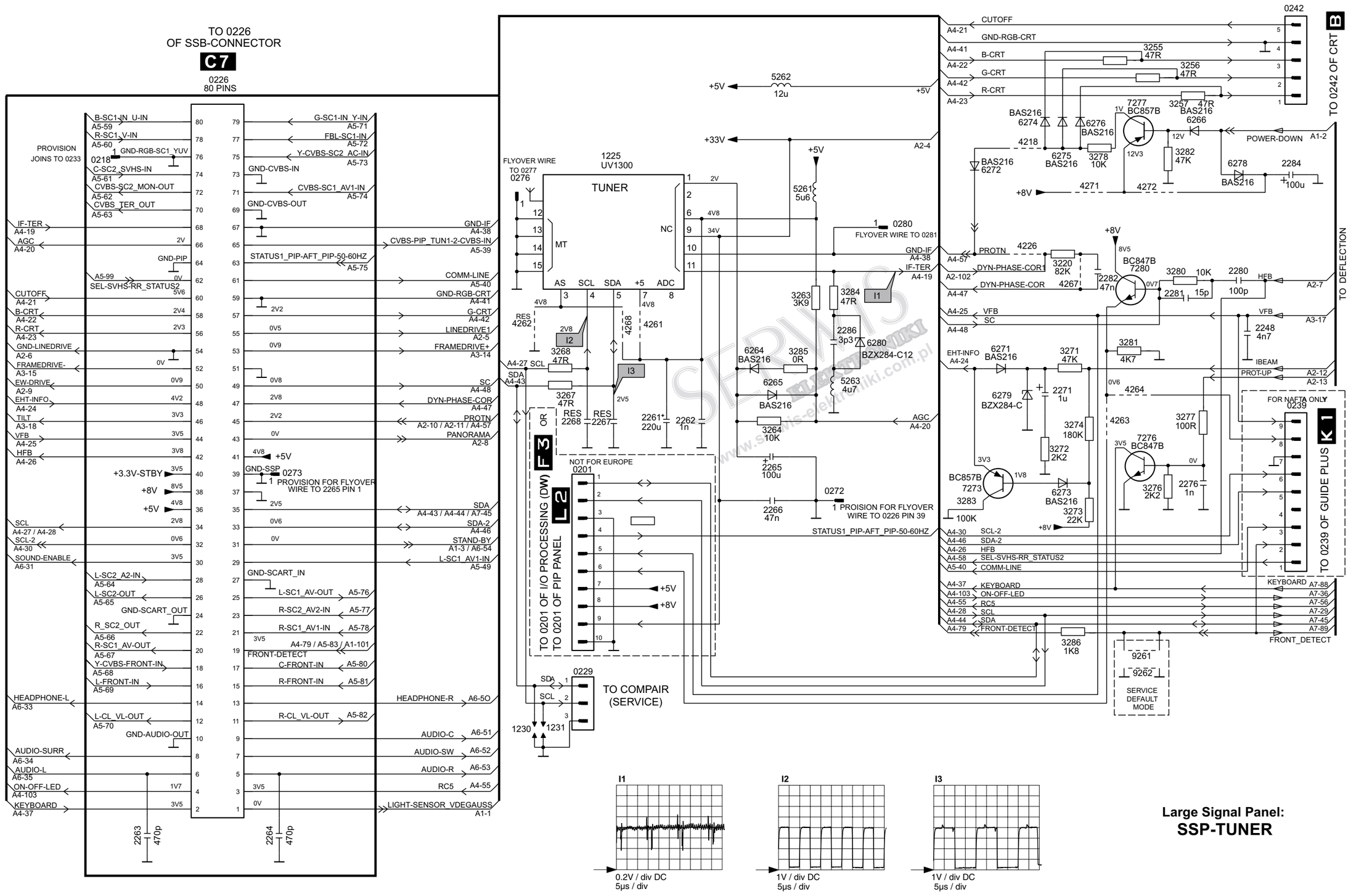

Large Signal Panel:
SSP-TUNER

OTVC Philips chassis A10E-DPL AA

Spis schematów

A 4

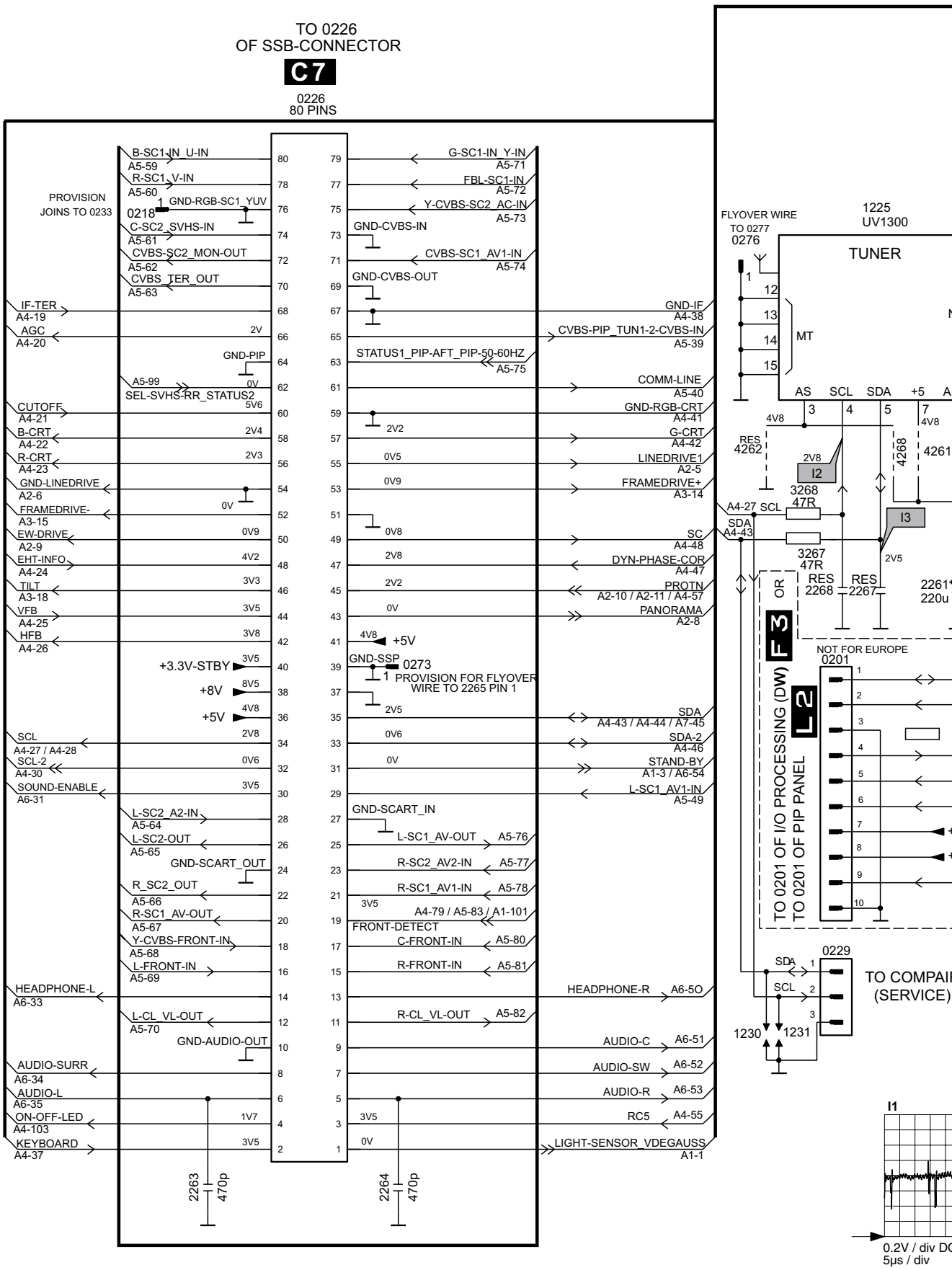

A 4

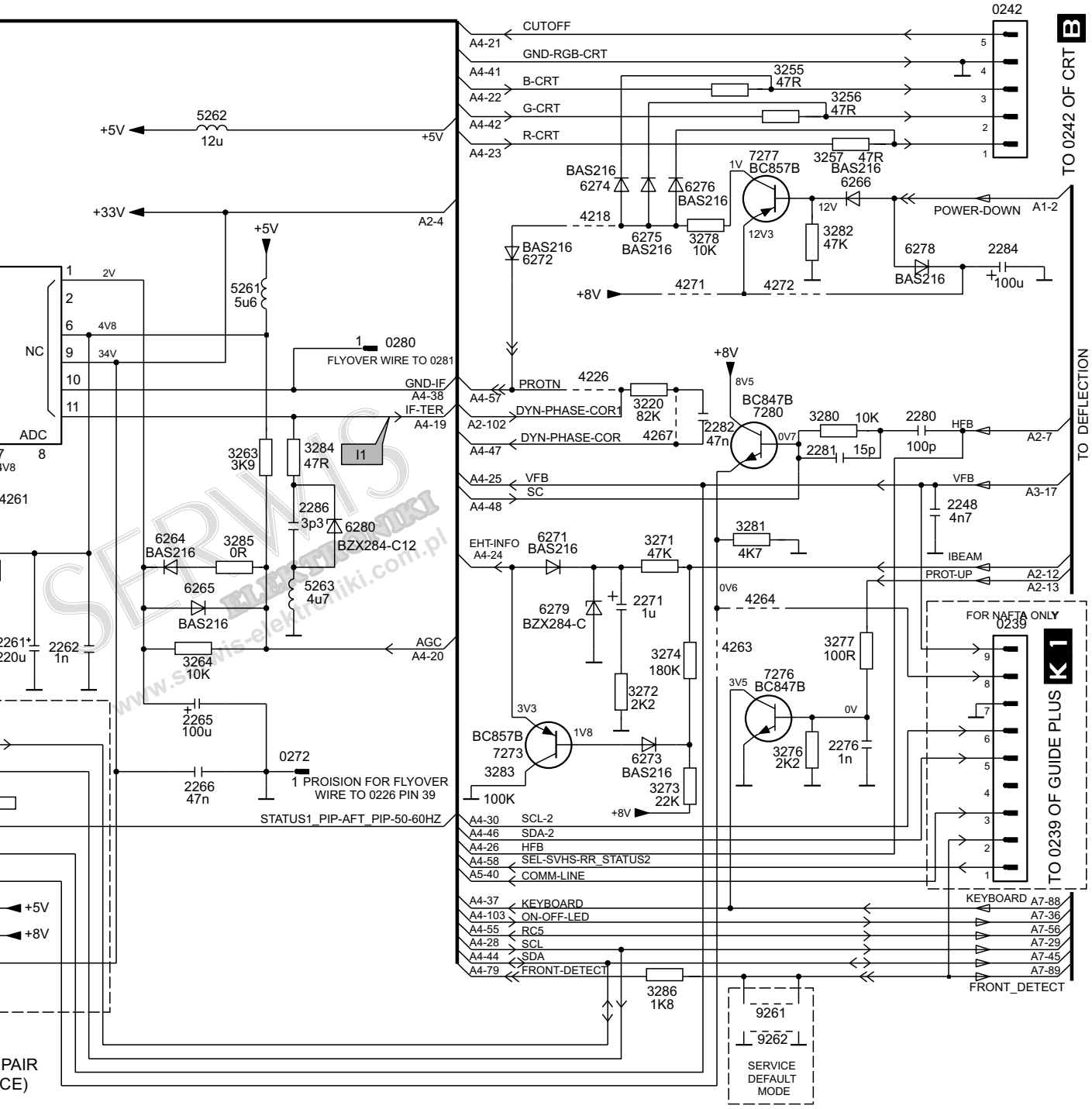

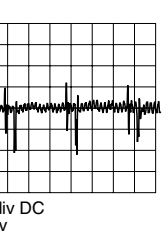

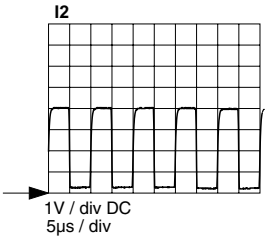

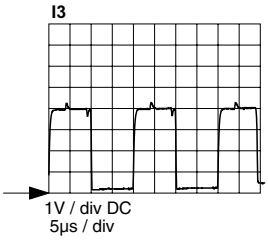

Large Signal Panel:
SSP-TUNER

OTVC Philips chassis A10E-DPL AA

A5

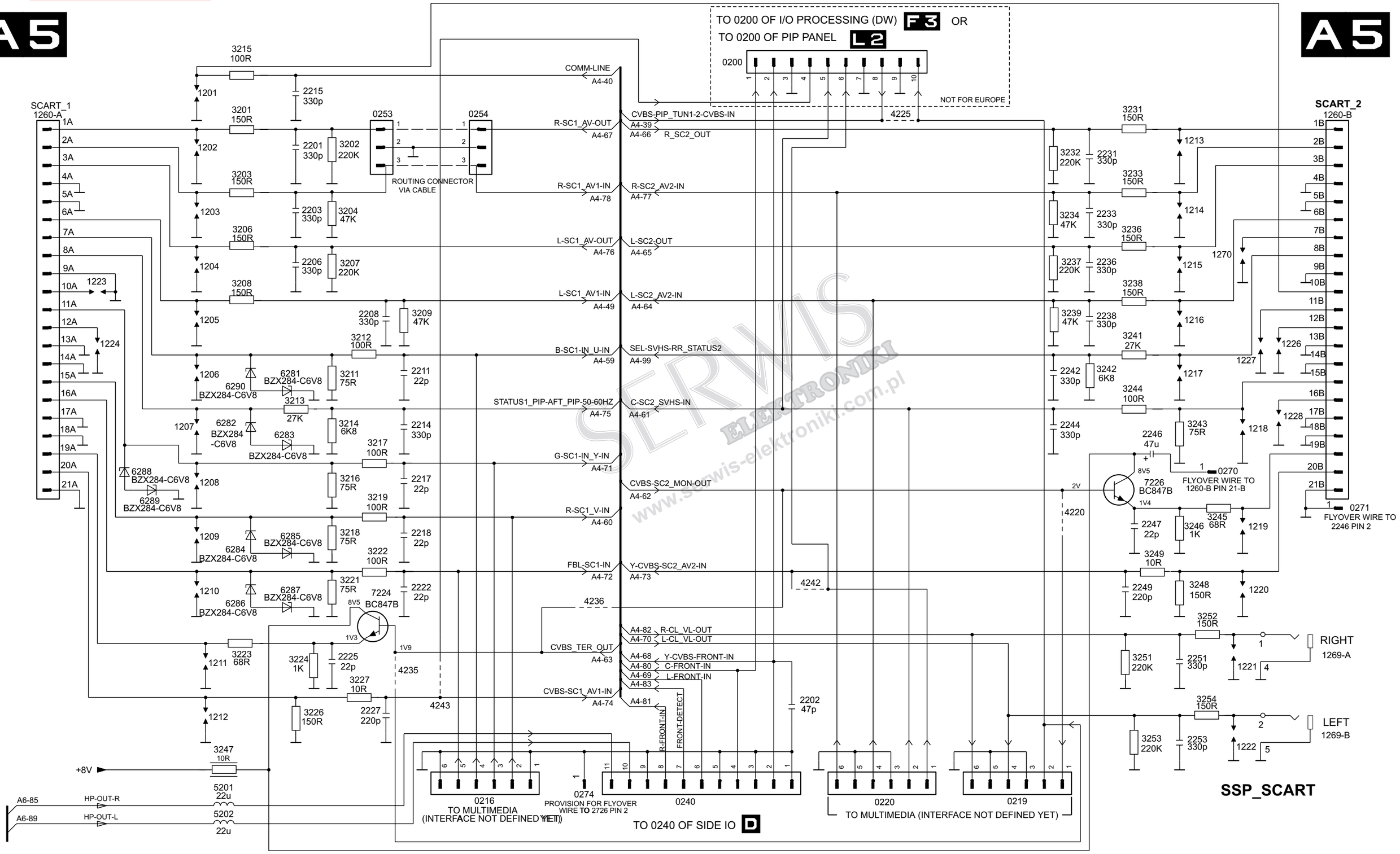

A5

OTVC Philips chassis A10E-DPL AA

Spis schematów

A5

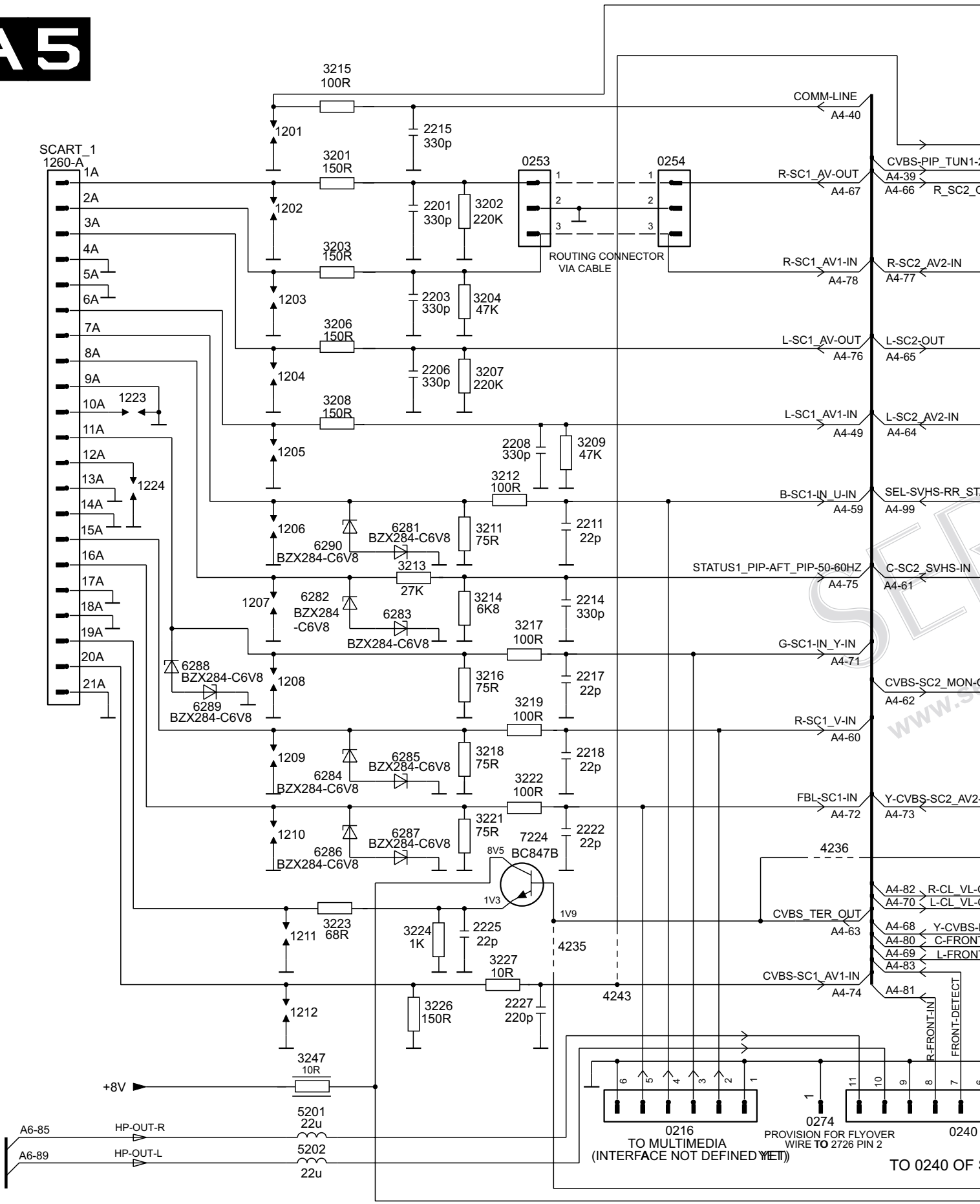

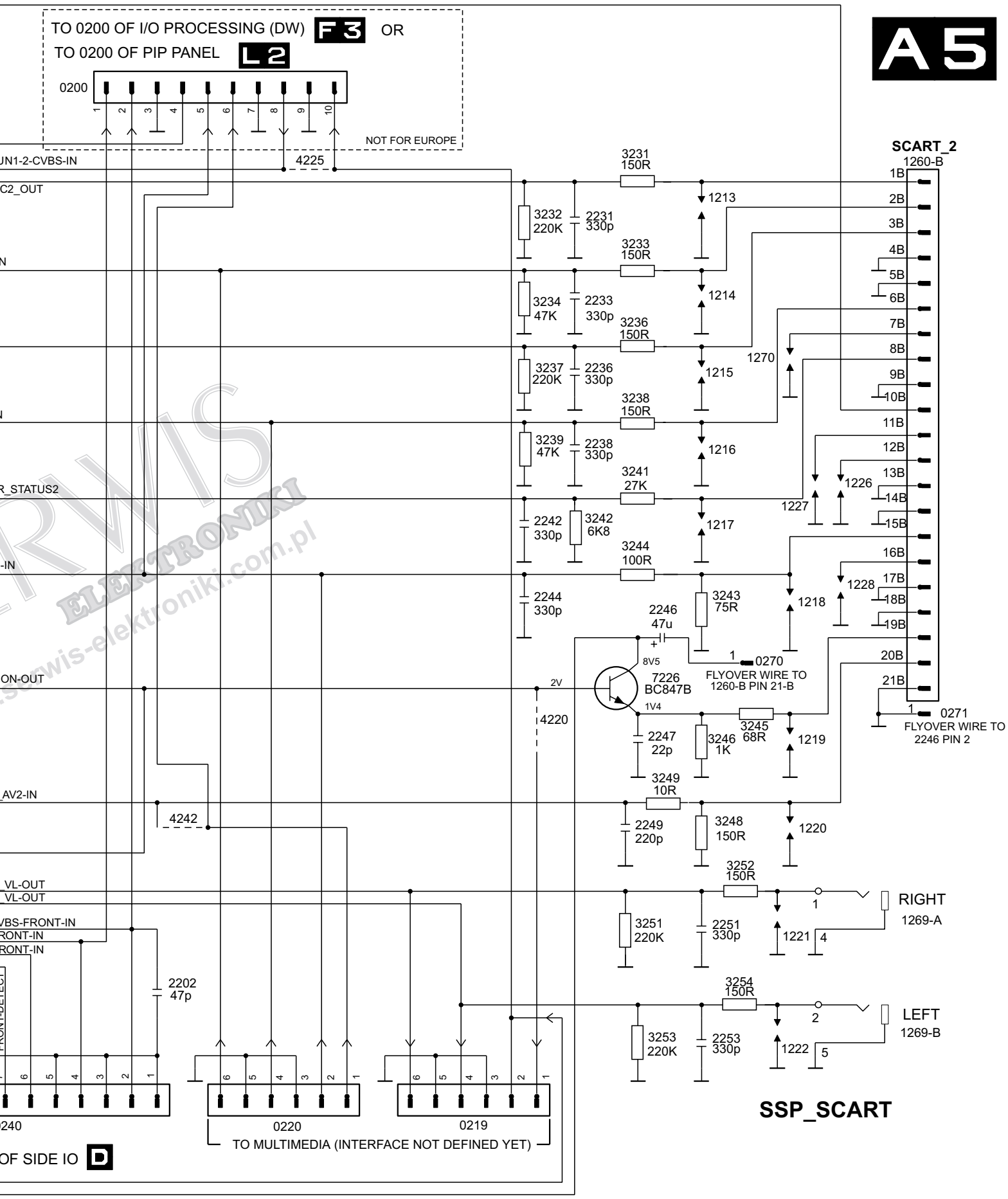

SERWIS ELEKTRONIKI
serwis-elektroniki.com.pl

A6

Large Signal Panel:
AUDIO

OTVC Philips chassis A10E-DPL AA

A6

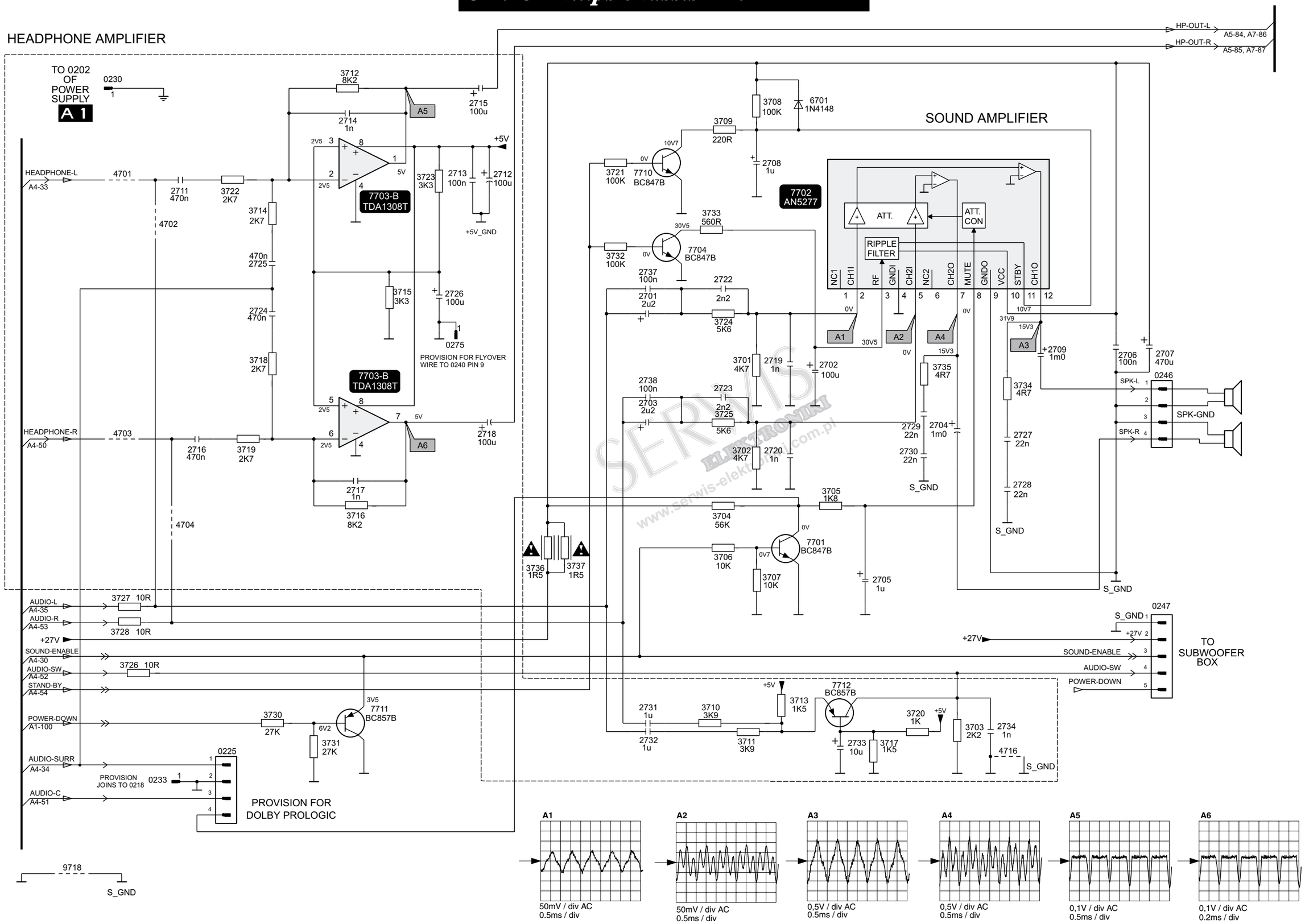

A6

Large Signal Panel:
AUDIO

OTVC Philips cl

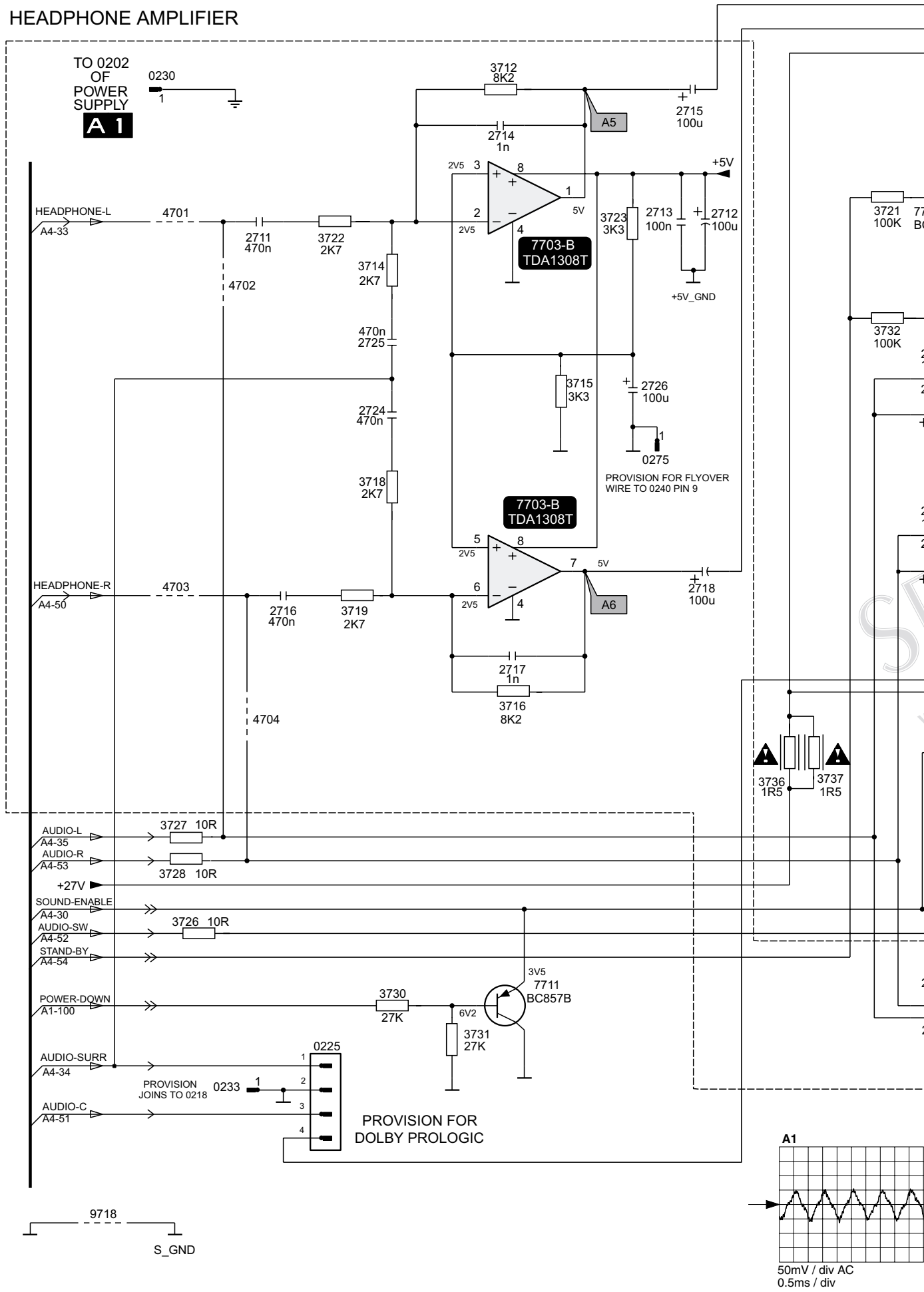

chassis A10E-DPL AA

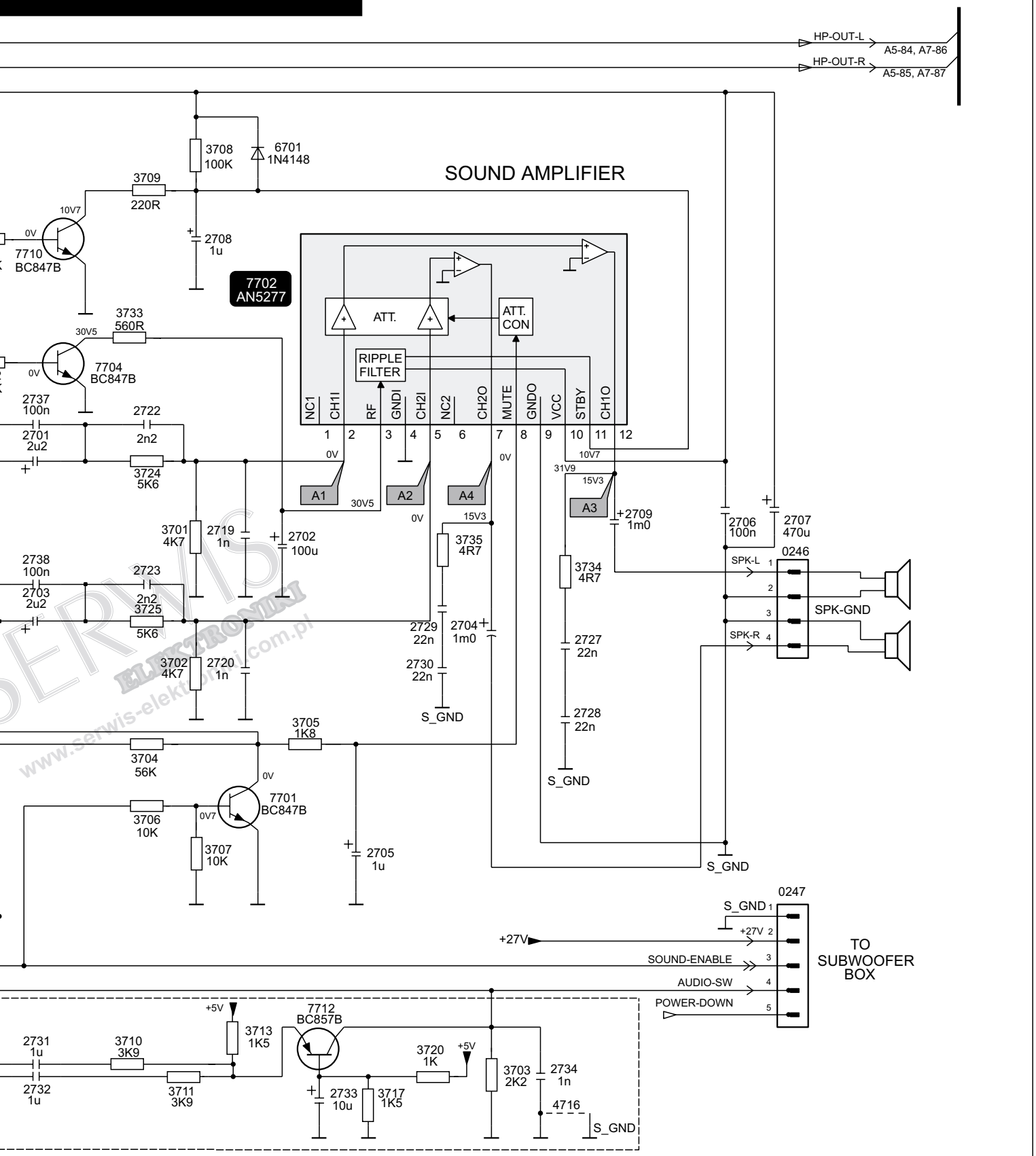

SERWIS ELEKTRONIKI www.serwis-elektroniki.com.pl

A 7

A 7

Large Signal Panel:

FRONT CONTROL / ROTATION / HEADPHONE

OTVC Philips chassis A10E-DPL AA

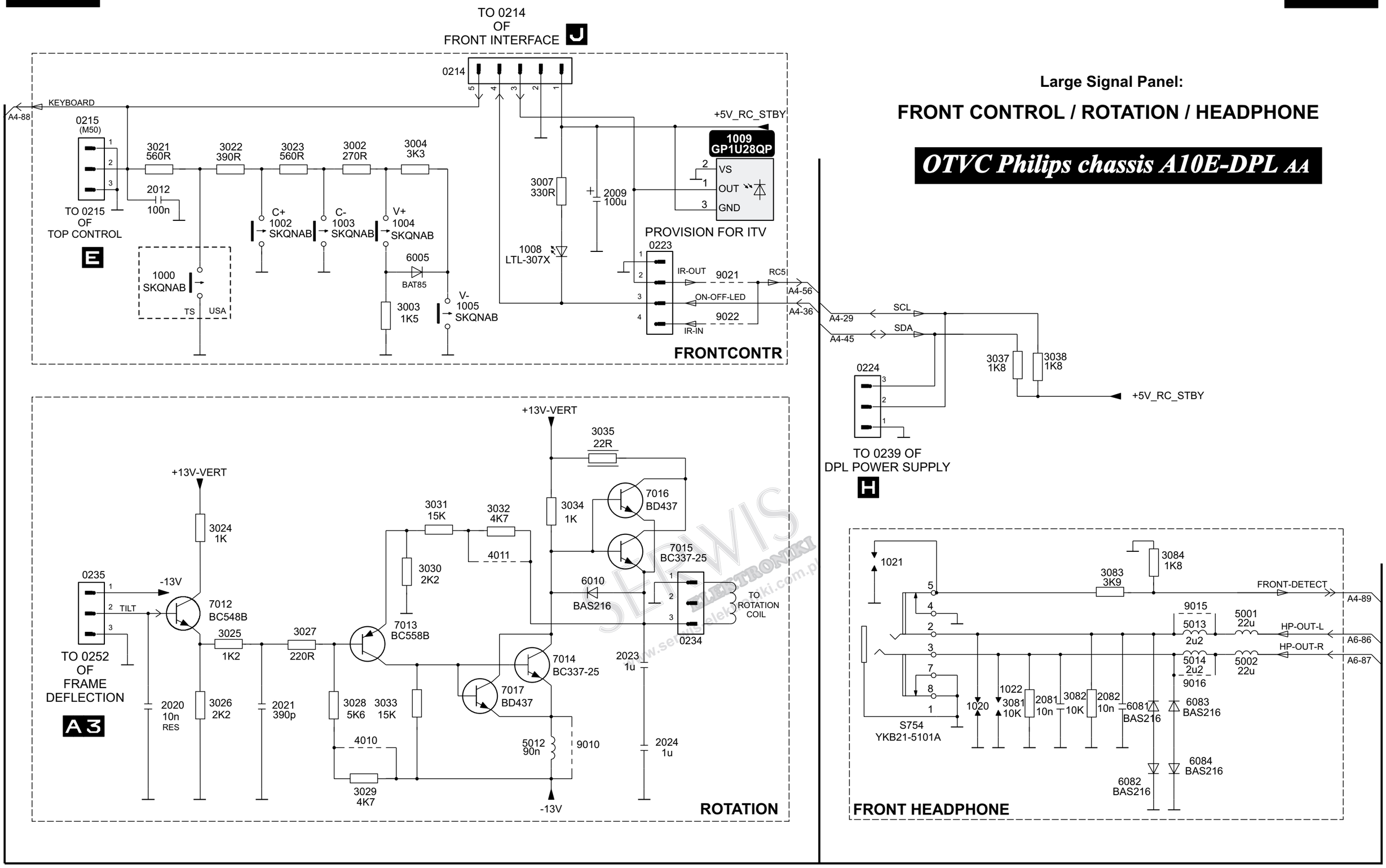

Spis schematów

A 7

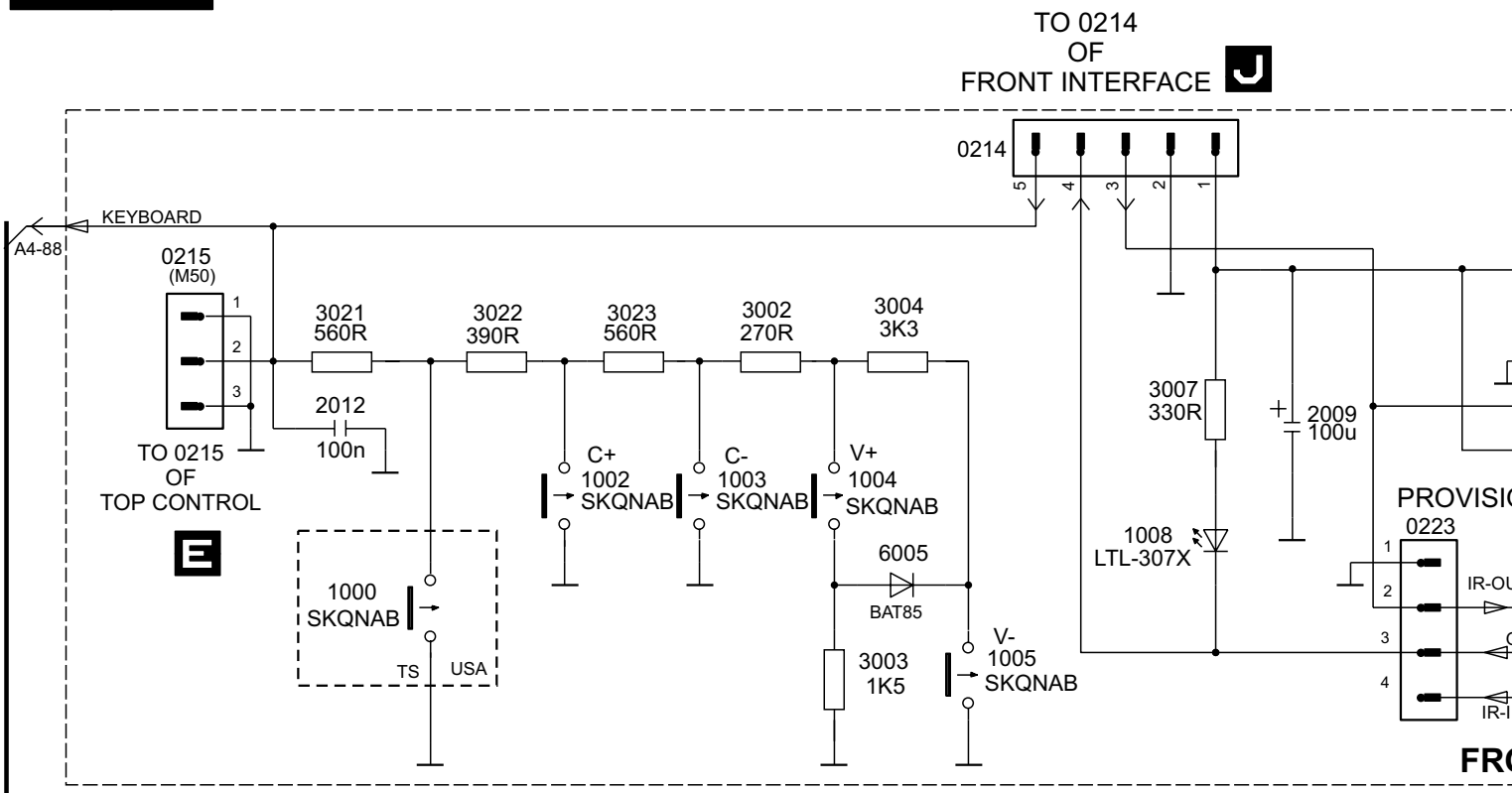

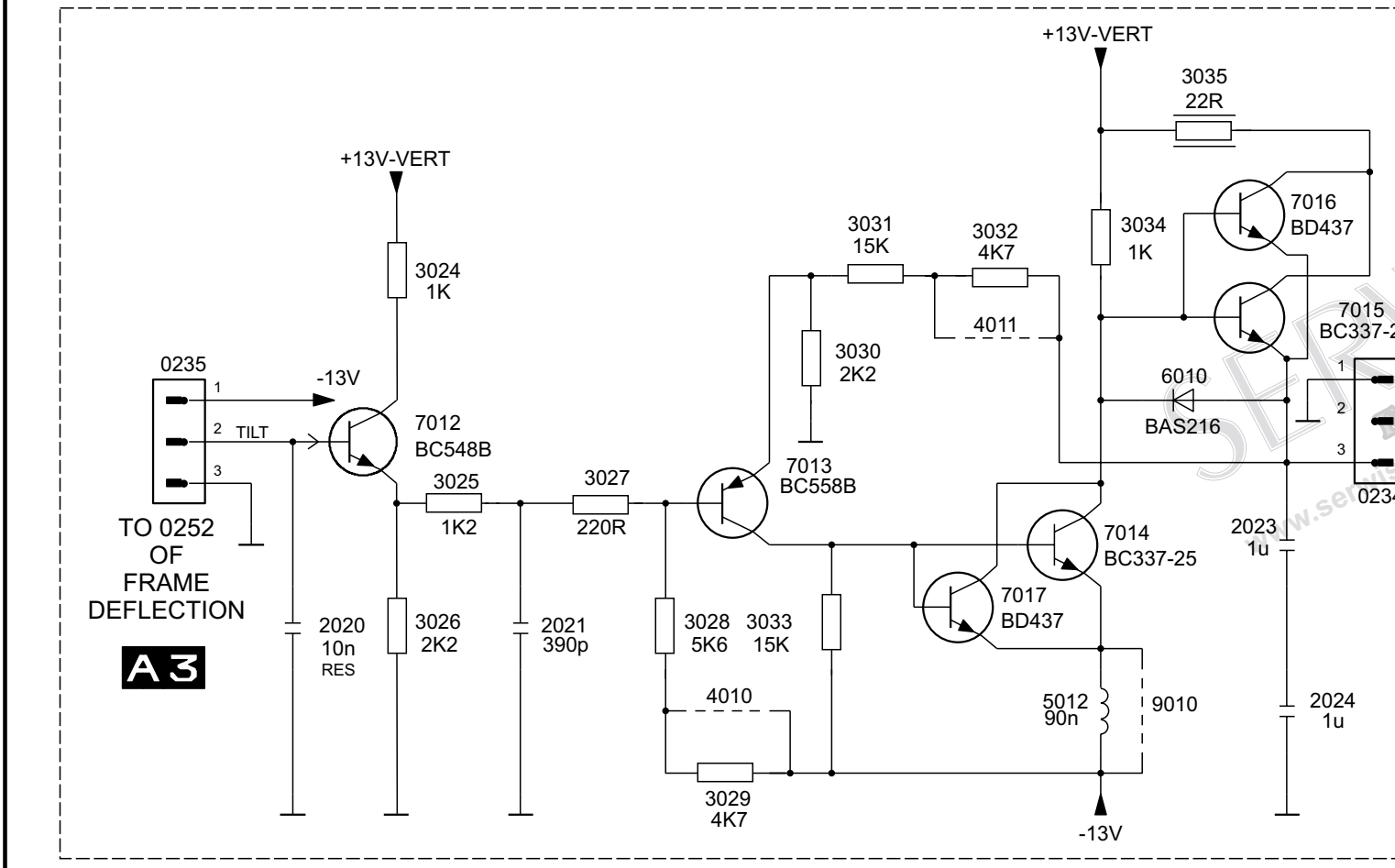

A 7

Large Signal Panel:

FRONT CONTROL / ROTATION / HEADPHONE

OTVC Philips chassis A10E-DPL AA

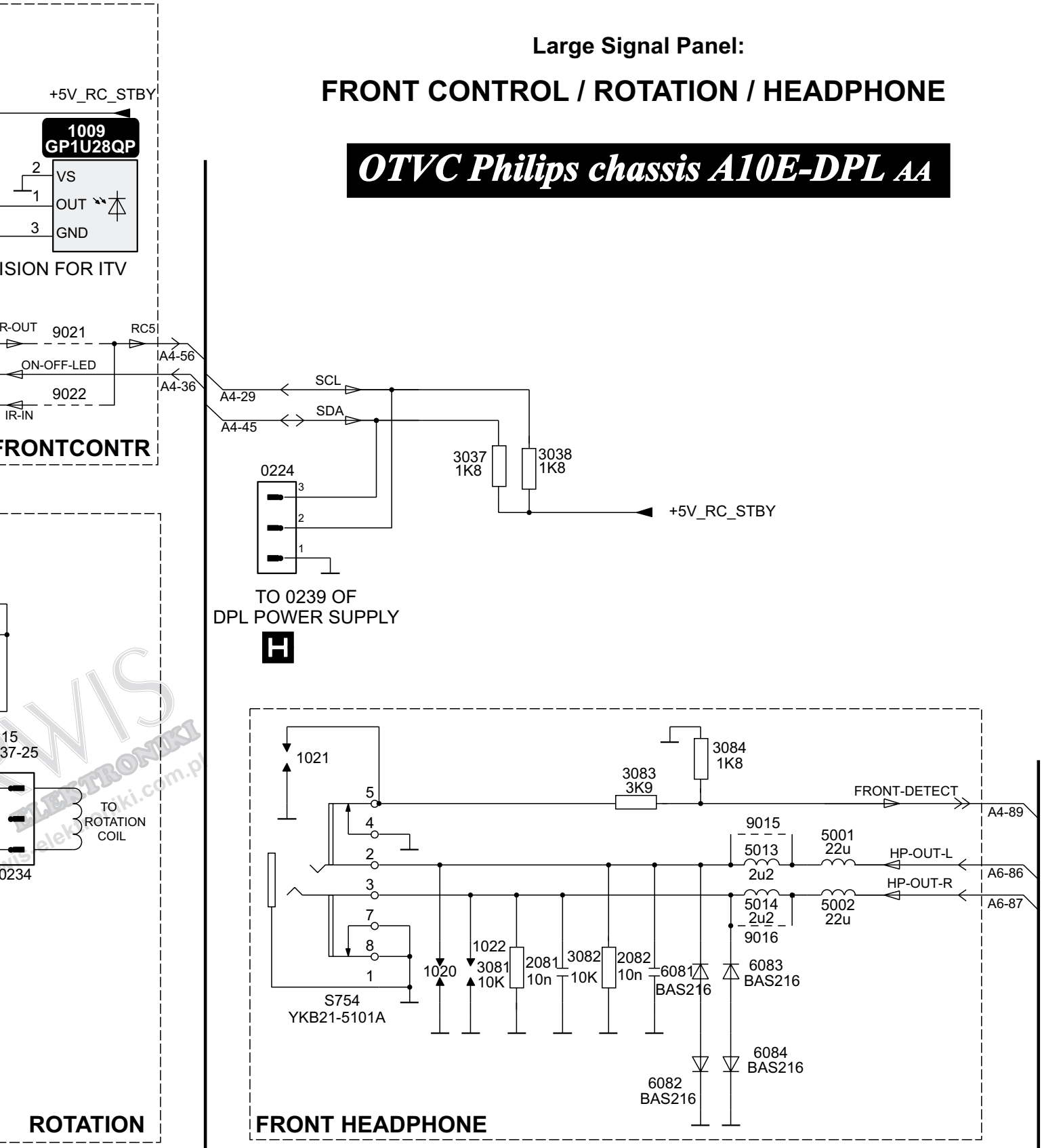

B

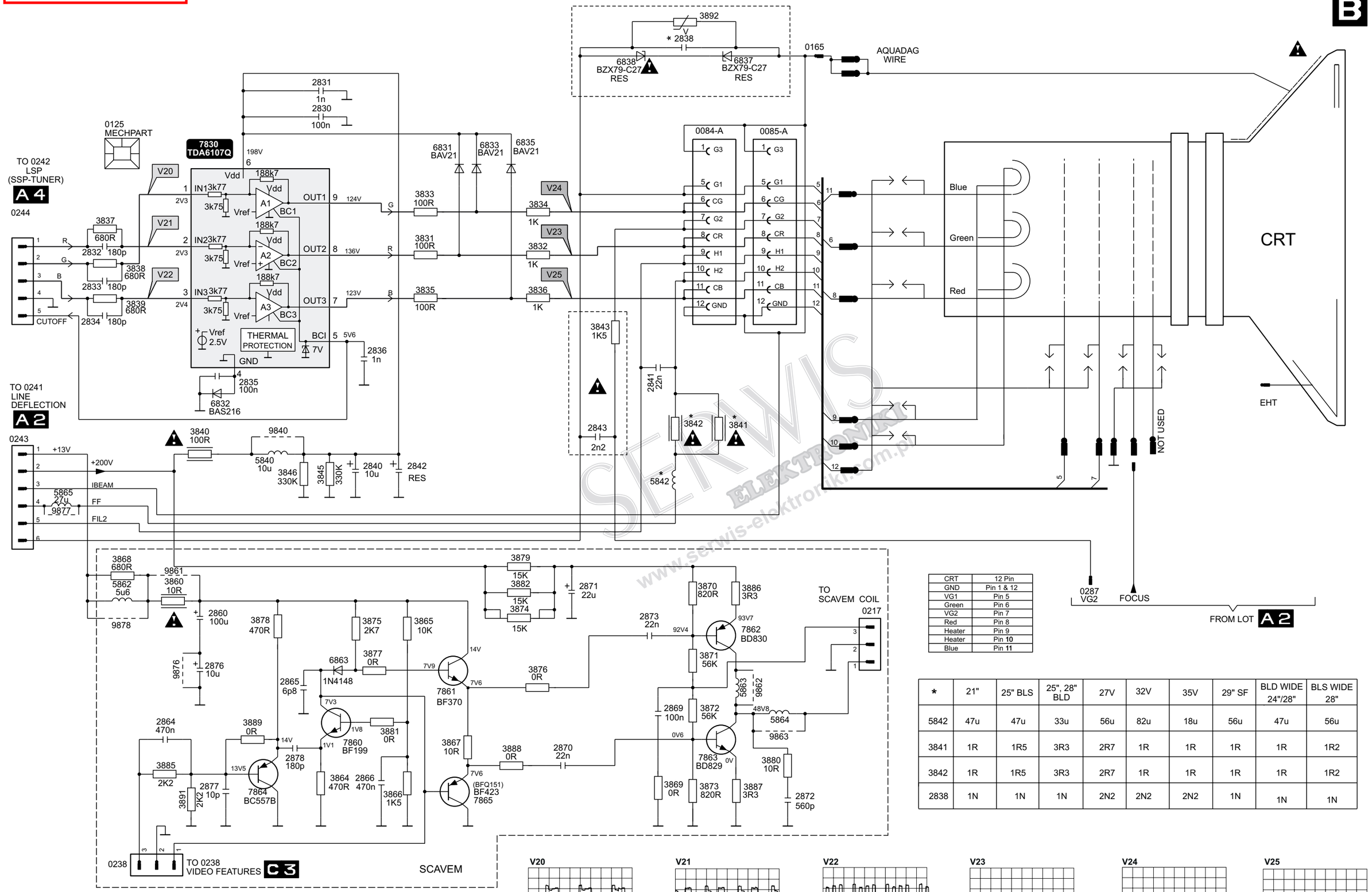

CRT	12 Pin
GND	Pin 1 & 12
VG1	Pin 5
Green	Pin 6
VG2	Pin 7
Red	Pin 8
Heater	Pin 9
Heater	Pin 10
Blue	Pin 11

*	21"	25" BLS	25", 28" BLD	27V	32V	35V	29" SF	BLD WIDE 24"/28"	BLS WIDE 28"
5842	47u	47u	33u	56u	82u	18u	56u	47u	56u
3841	1R	1R5	3R3	2R7	1R	1R	1R	1R	1R2
3842	1R	1R5	3R3	2R7	1R	1R	1R	1R	1R2
2838	1N	1N	1N	2N2	2N2	2N2	1N	1N	1N

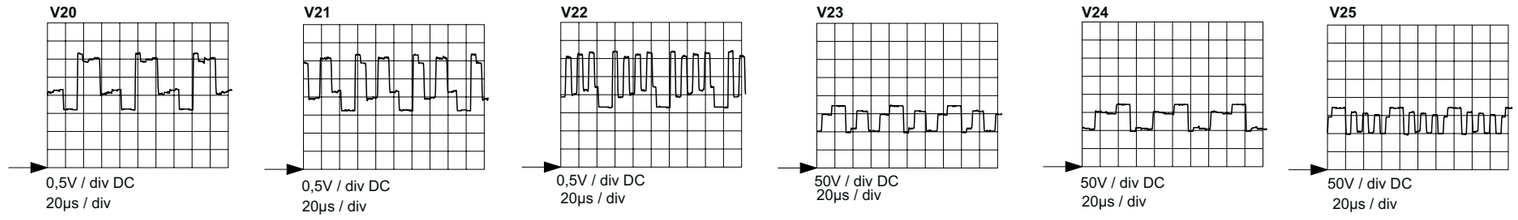

CRT PANEL

OTVC Philips chassis A10E-DPL AA

SERWIS ELEKTRONIKI www.serwis-elektroniki.com.pl

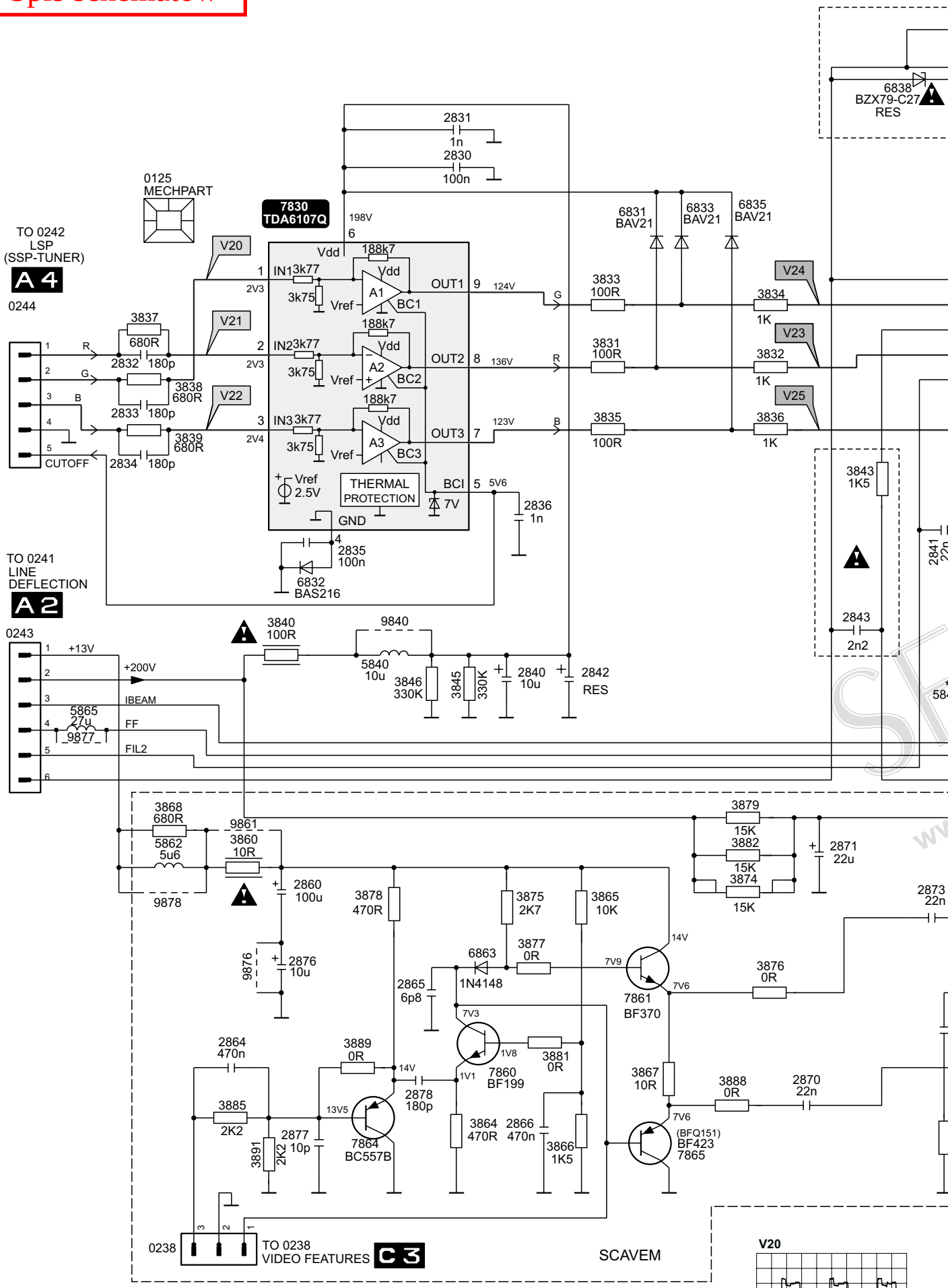

CRT PANEL

OTVC Philips chassis A10E-DPL AA

B

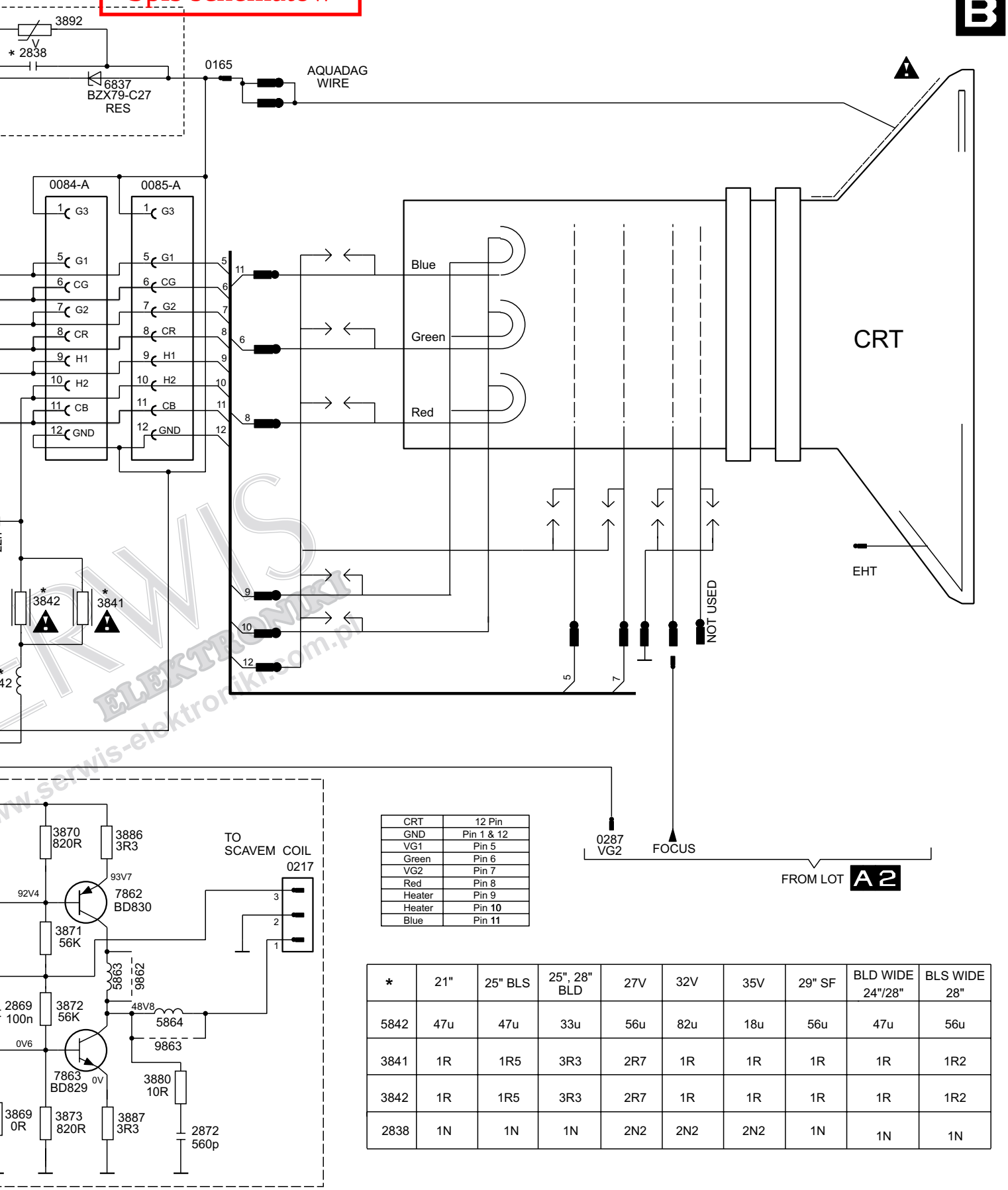

CRT	12 Pin
GND	Pin 1 & 12
VG1	Pin 5
Green	Pin 6
VG2	Pin 7
Red	Pin 8
Heater	Pin 9
Heater	Pin **10**
Blue	Pin **11**

*	21"	25" BLS	25", 28" BLD	27V	32V	35V	29" SF	BLD WIDE 24"/28"	BLS WIDE 28"
5842	47u	47u	33u	56u	82u	18u	56u	47u	56u
3841	1R	1R5	3R3	2R7	1R	1R	1R	1R	1R2
3842	1R	1R5	3R3	2R7	1R	1R	1R	1R	1R2
2838	1N	1N	1N	2N2	2N2	2N2	1N	1N	1N

V21

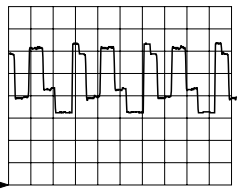

0,5V / div DC
20µs / div

V22

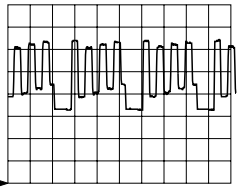

0,5V / div DC
20µs / div

V23

50V / div DC
20µs / div

V24

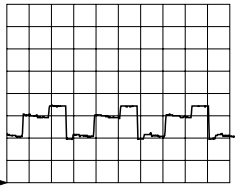

50V / div DC
20µs / div

V25

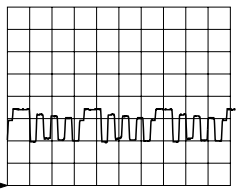

50V / div DC
20µs / div

SERWIS ELEKTRONIKI
www.serwis-elektroniki.com.pl

Spis schematów

C 1

OTVC Philips chassis A10E-DPL AA

Small Signal Board:
IF-VIDEO-SYNC-CHROMA

C 1

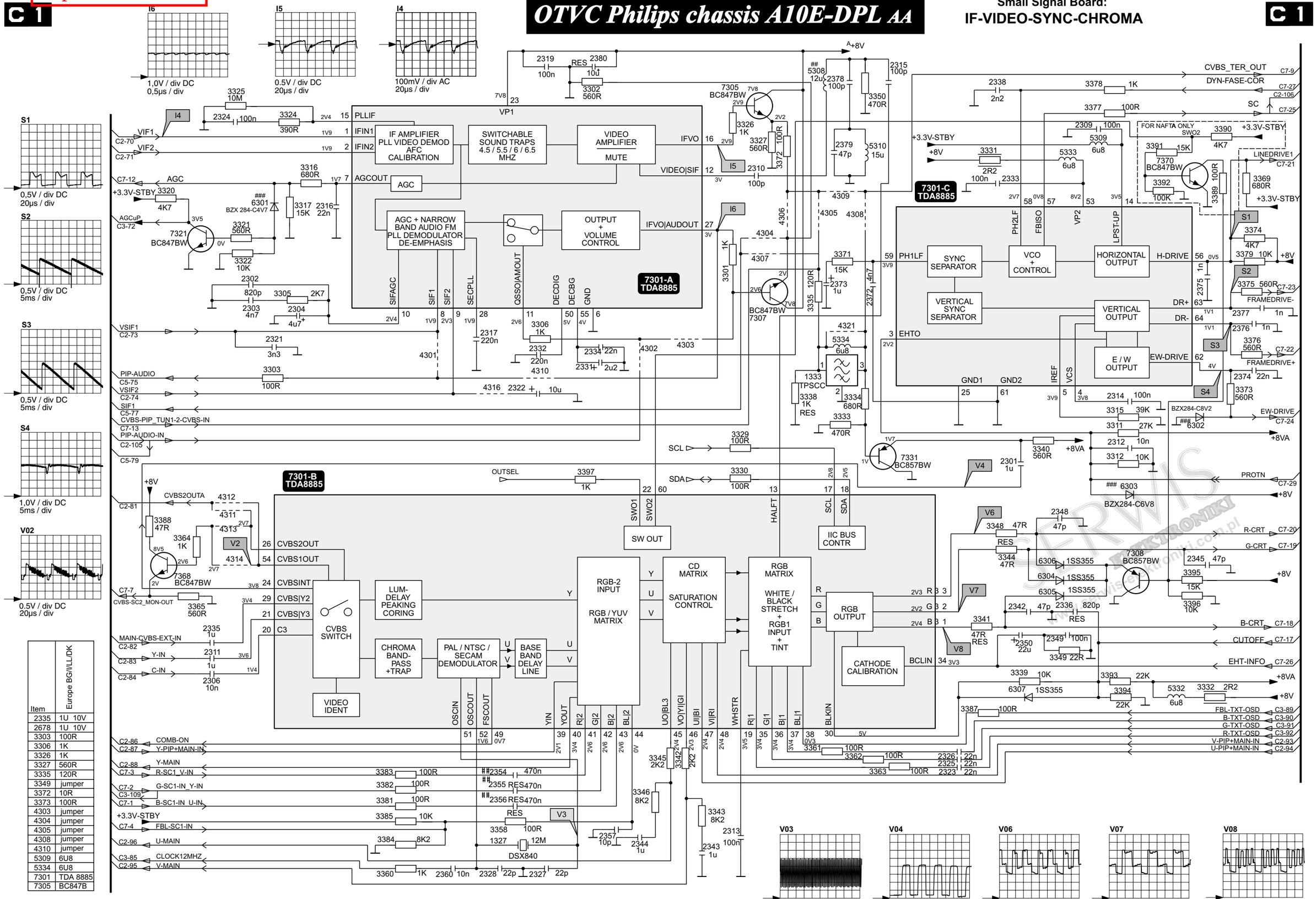

Item	Europe BG/I/LL/DK
2335	1U 10V
2678	1U 10V
3303	100R
3306	1K
3326	1K
3327	560R
3335	120R
3349	jumper
3372	10R
3373	100R
4303	jumper
4304	jumper
4305	jumper
4308	jumper
4310	jumper
5309	6U8
5334	6U8
7301	TDA 8885
7305	BC847B

SERWIS ELEKTRONIKI www.serwis-elektroniki.com.pl

Spis schematów

C 1

OTVC Philip

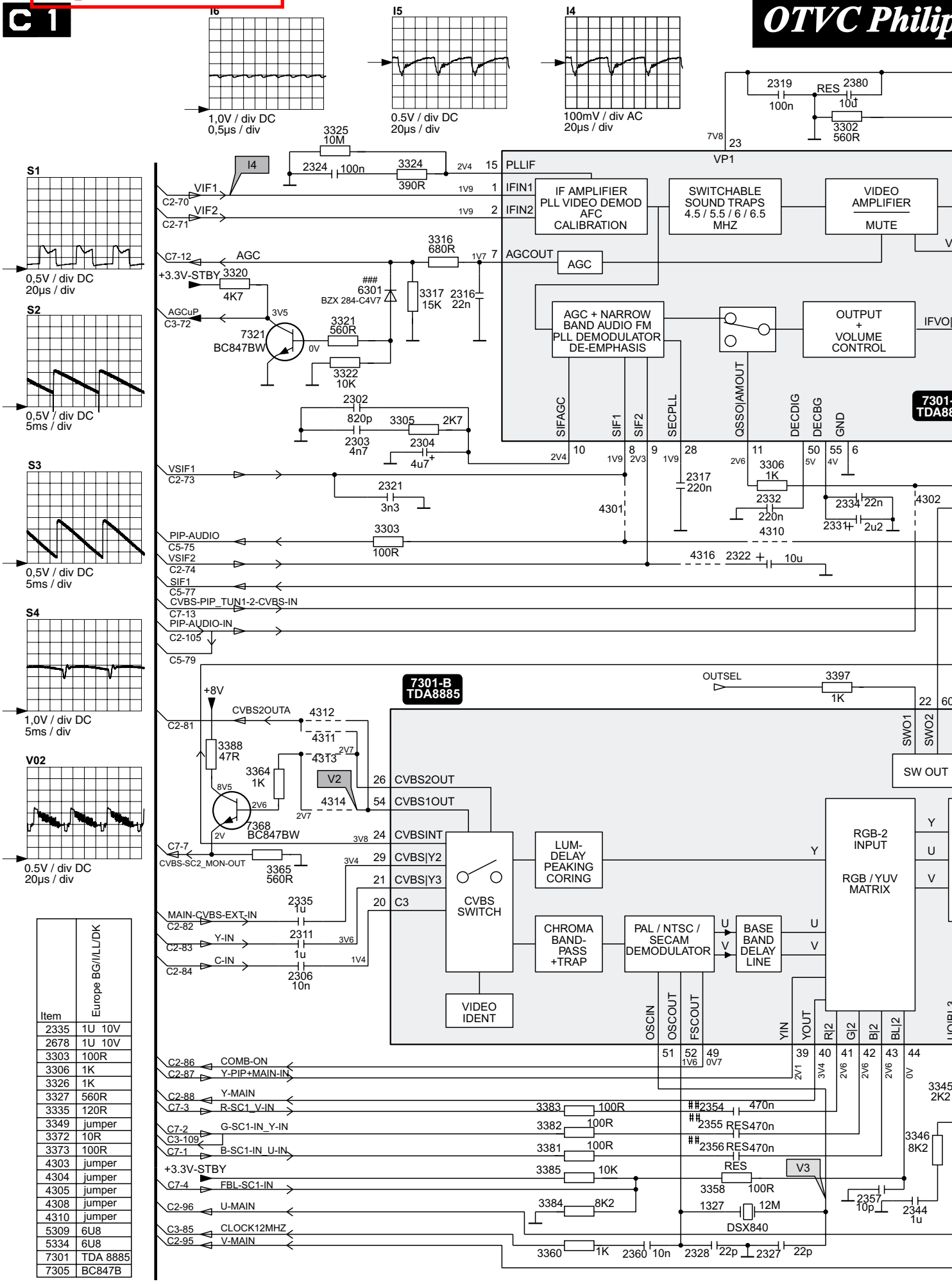

Item	Europe BG/I/LL/DK
2335	1U 10V
2678	1U 10V
3303	100R
3306	1K
3326	1K
3327	560R
3335	120R
3349	jumper
3372	10R
3373	100R
4303	jumper
4304	jumper
4305	jumper
4308	jumper
4310	jumper
5309	6U8
5334	6U8
7301	TDA 8885
7305	BC847B

lips chassis A10E-DPL AA

Small Signal Board:
IF-VIDEO-SYNC-CHROMA

C 1

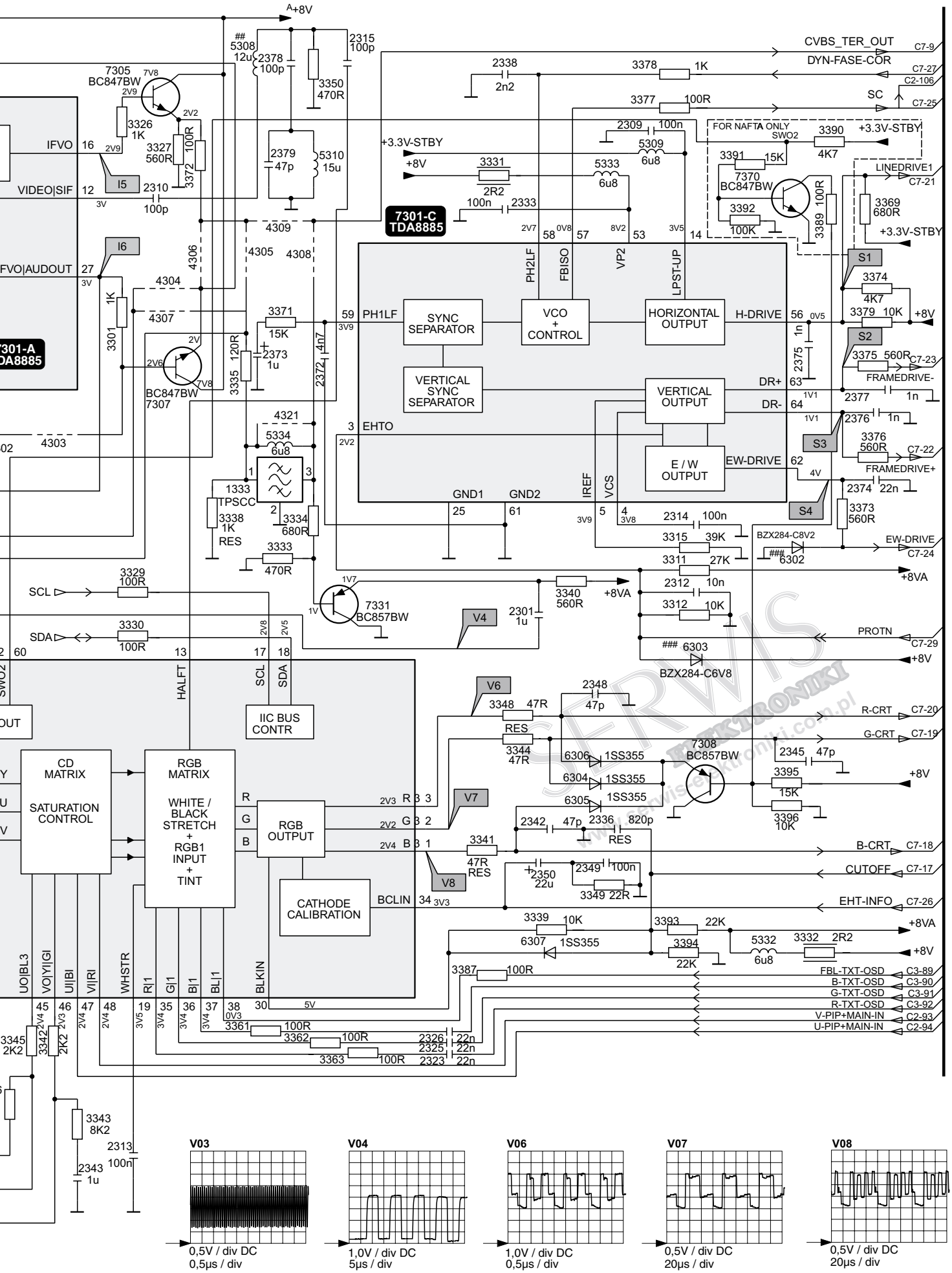

C 2

Small Signal Board:
VIDEO_FEATURES

OTVC Philips chassis A10E-DPL AA

C 2

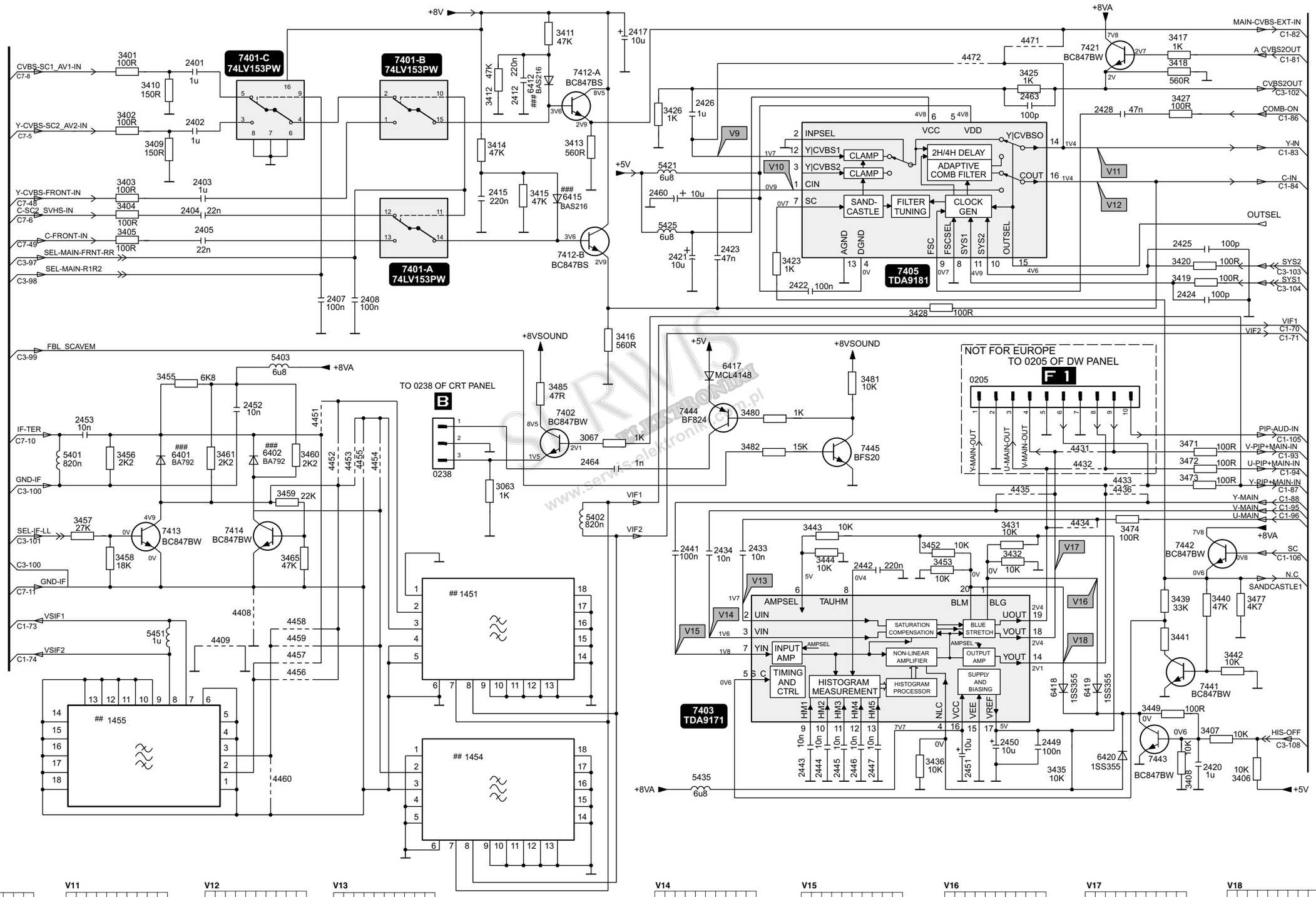

Item	Histogram No PIP/DW	No Histogram/PIP/DW
2420	100P 50V	,
2433	10N 50V	,
2434	10N 50V	,
2441	100N 16V	,
2442	220N 16V	,
2443	10N 50V	,
2444	10N 50V	,
2445	10N 50V	,
2446	10N 50V	,
2447	10N 50V	,
2449	100N 16V	,
2450	10U 16V	,
2451	10U 16V	,
3406	10K	,
3407	10K	,
3408	10K	,
3432	jumper	,
3435	22K	,
3436	33K	,
3439	10K	,
3443	jumper	,
3444	220K	,
3453	jumper	,
3477	4K7	,
3477	,	4K7
4434	,	jumper
4435	,	jumper
4436		jumper
5435	6U8	,
7403	TDA9171	,
7443	BC847	,

Item	SAW filter EU BG/I/L/L'/DK
1451	OFWK3953L
1454	-
1455	OFWK9656L
2452	10N 50V
3455	6K8
3456	2K2
3457	27K
3458	18K
3459	-
3460	-
3461	2K2
3465	-
4451	jumper
4452	-
4453	-
4455	jumper
4457	jumper
4458	jumper
4460	-
5403	6U8
6401	1SS356
6402	-
7413	BC847BW
7414	-

V9
0,5V / div DC
5µs / div

V10
0,2V / div DC
20µs / div

V11
0,5V / div DC
20µs / div

V12
0,5V / div DC
20µs / div

V13
0,5V / div DC
10µs / div

V14
0,5V / div DC
10µs / div

V15
0,5V / div DC
10µs / div

V16
0,5V / div DC
10µs / div

V17
0,5V / div DC
10µs / div

V18
0,5V / div DC
10µs / div

SERWIS ELEKTRONIKI www.serwis-elektroniki.com.pl

C 2

Small Signal Board:
VIDEO_FEATURES

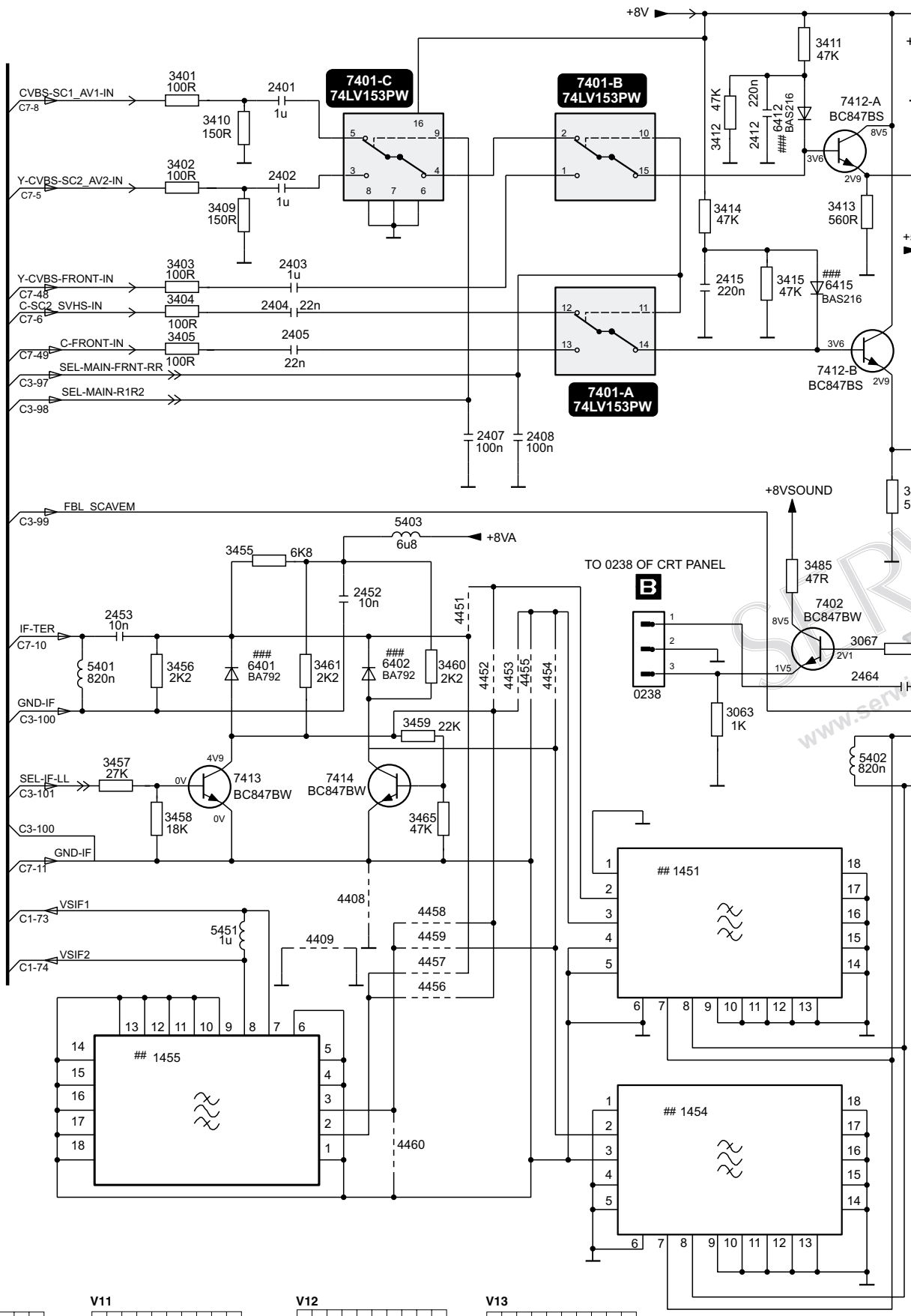

Item	Histogram No PIP/DW	No Histogram/PIP/DW
2420	100P 50V	-
2433	10N 50V	-
2434	10N 50V	-
2441	100N 16V	-
2442	220N 16V	-
2443	10N 50V	-
2444	10N 50V	-
2445	10N 50V	-
2446	10N 50V	-
2447	10N 50V	-
2449	100N 16V	-
2450	10U 16V	-
2451	10U 16V	-
3406	10K	-
3407	10K	-
3408	10K	-
3432	jumper	-
3435	22K	-
3436	33K	-
3439	10K	-
3443	jumper	-
3444	220K	-
3453	jumper	-
3477	4K7	
3477	-	4K7
4434	-	jumper
4435	-	jumper
4436	-	jumper
5435	6U8	-
7403	TDA9171	-
7443	BC847	-

Item	SAW filter EU BG/I/L/DK
1451	OFWK3953L
1454	-
1455	OFWK9656L
2452	10N 50V
3455	6K8
3456	2K2
3457	27K
3458	18K
3459	-
3460	-
3461	2K2
3465	-
4451	jumper
4452	-
4453	-
4455	jumper
4457	jumper
4458	jumper
4460	-
5403	6U8
6401	1SS356
6402	-
7413	BC847BW
7414	-

V9

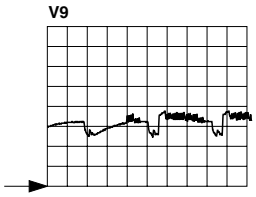

0,5V / div DC
5µs / div

V10

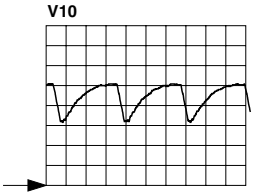

0,2V / div DC
20µs / div

V11

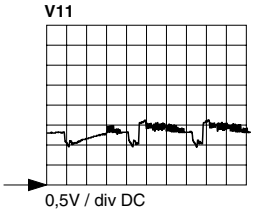

0,5V / div DC
20µs / div

V12

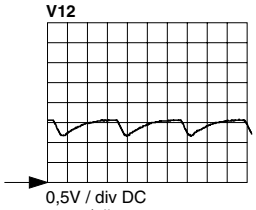

0,5V / div DC
20µs / div

V13

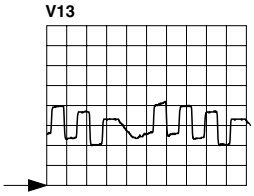

0,5V / div DC
10µs / div

OTVC Philips chassis A10E-DPL AA

C 2

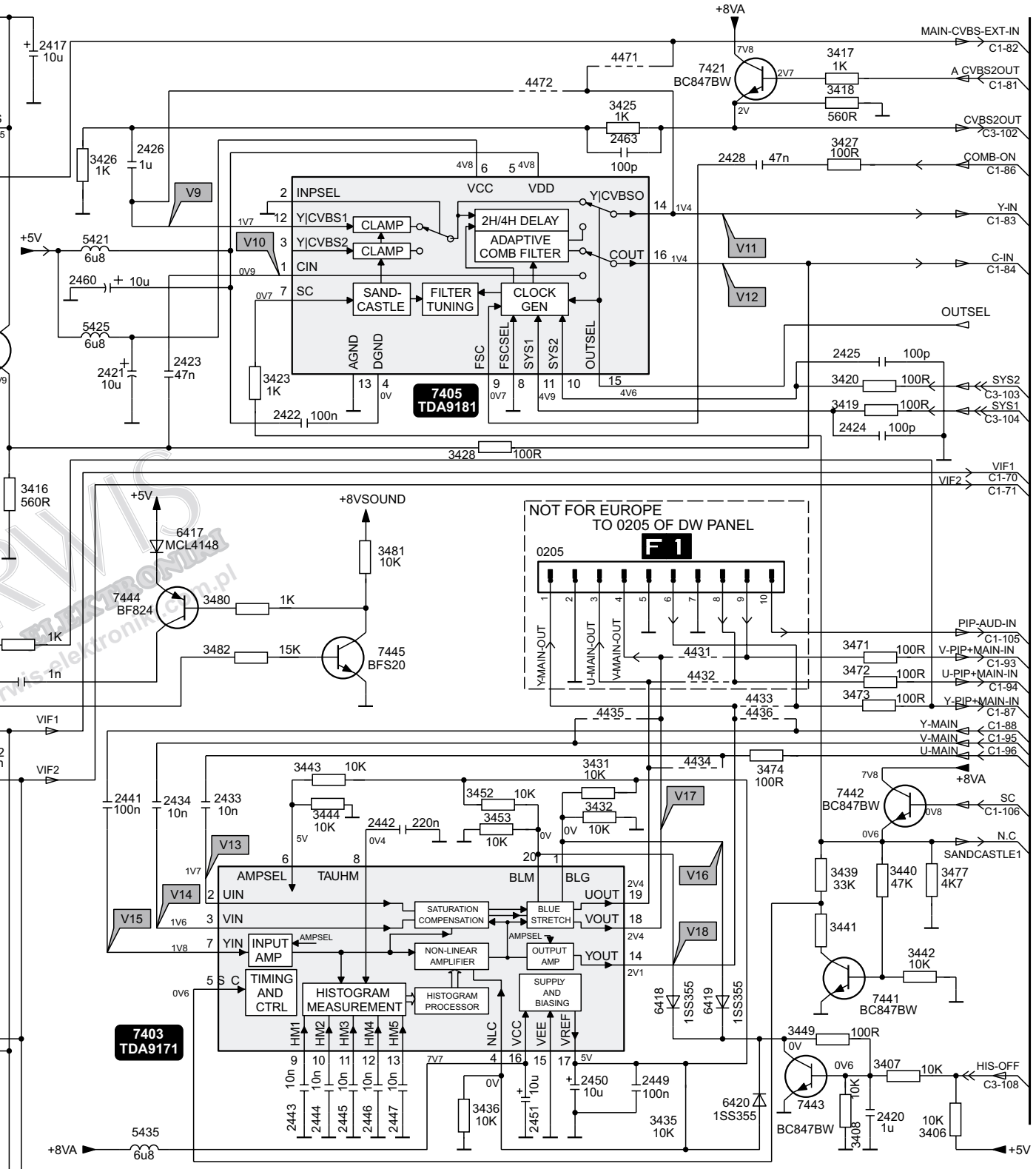

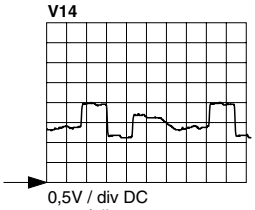

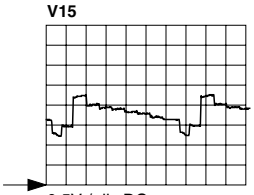

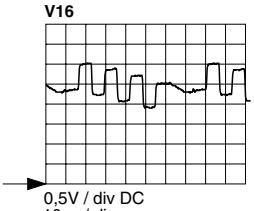

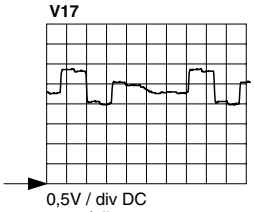

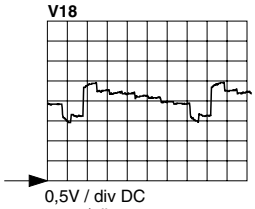

Spis schematów

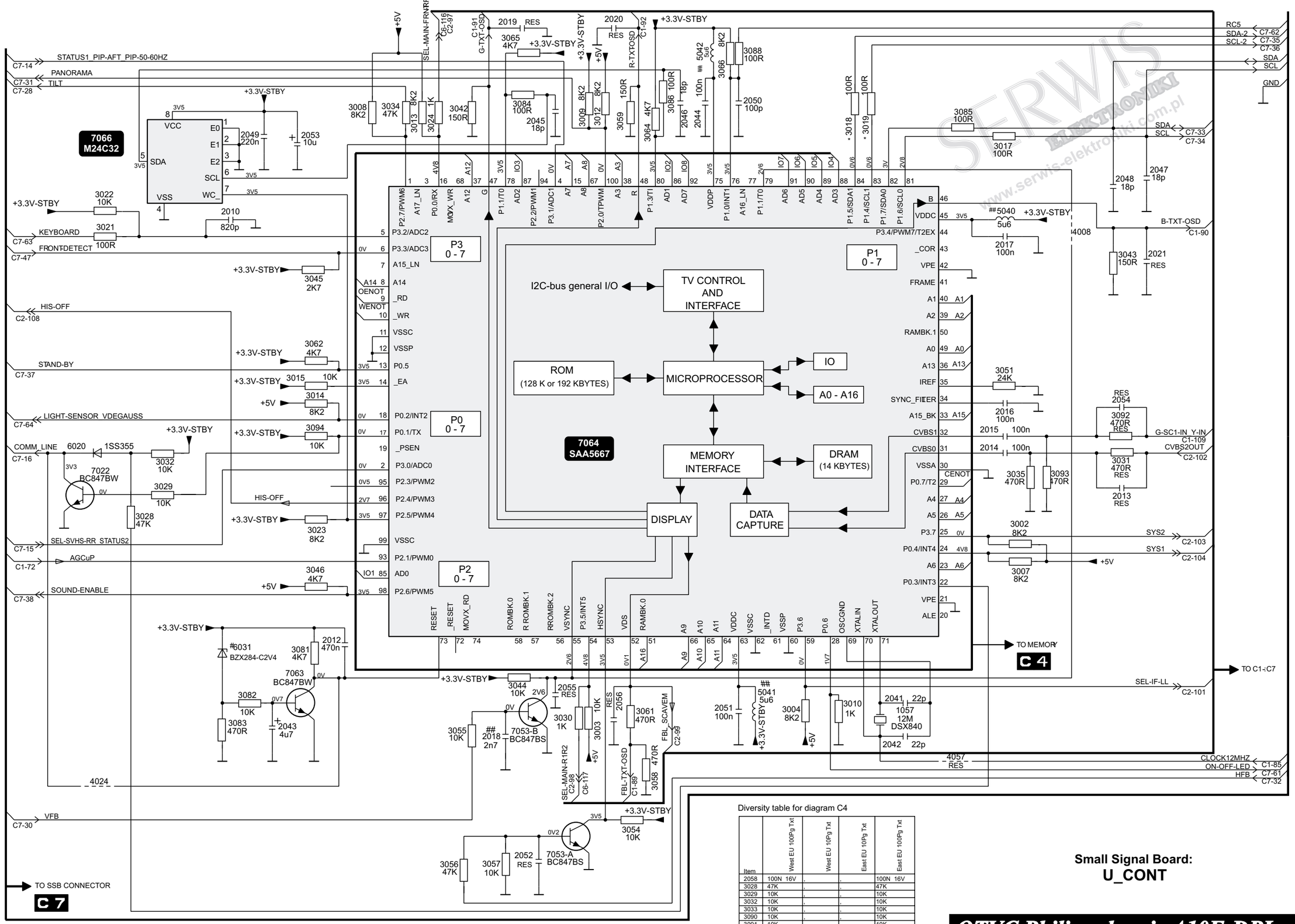

Diversity table for diagram C4

Item	West EU 100Pg Txt	West EU 10Pg Txt	East EU 10Pg Txt	East EU 100Pg Txt
2058	100N 16V	.	.	100N 16V
3028	47K	.	.	47K
3029	10K	.	.	10K
3032	10K	.	.	10K
3033	10K	.	.	10K
3090	10K	.	.	10K
3091	10K	.	.	10K
3094	10K	.	.	10K
5050	5U6	.	.	5U6
6020	1SS355	.	.	1SS355
7022	BC847	.	.	BC847
7070	UPD431000	.	.	UPD431000

Small Signal Board:
U_CONT

OTVC Philips chassis A10E-DPL AA

SERWIS ELEKTRONIKI www.serwis-elektroniki.com.pl

C 3

Spis schematów

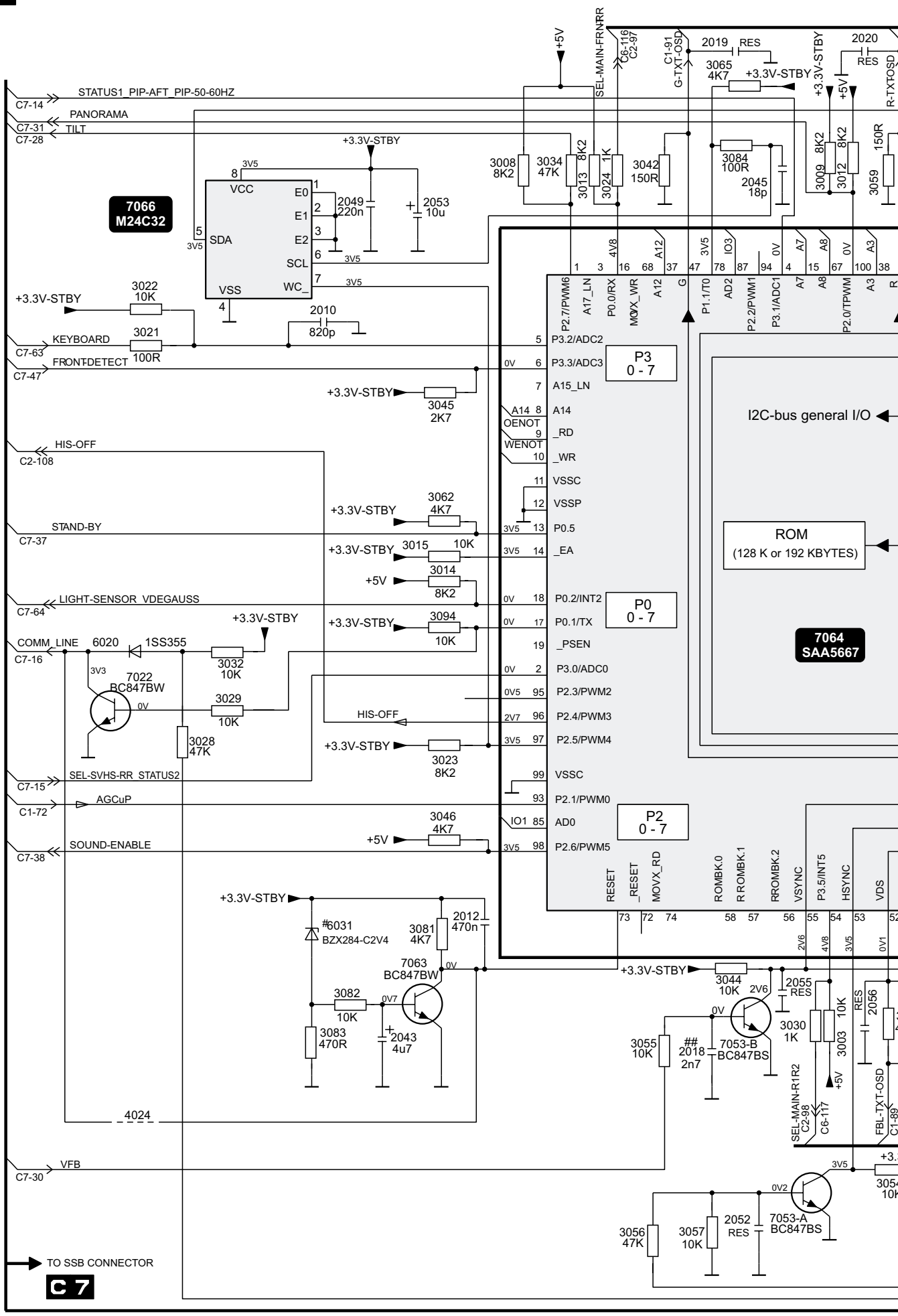

C 3

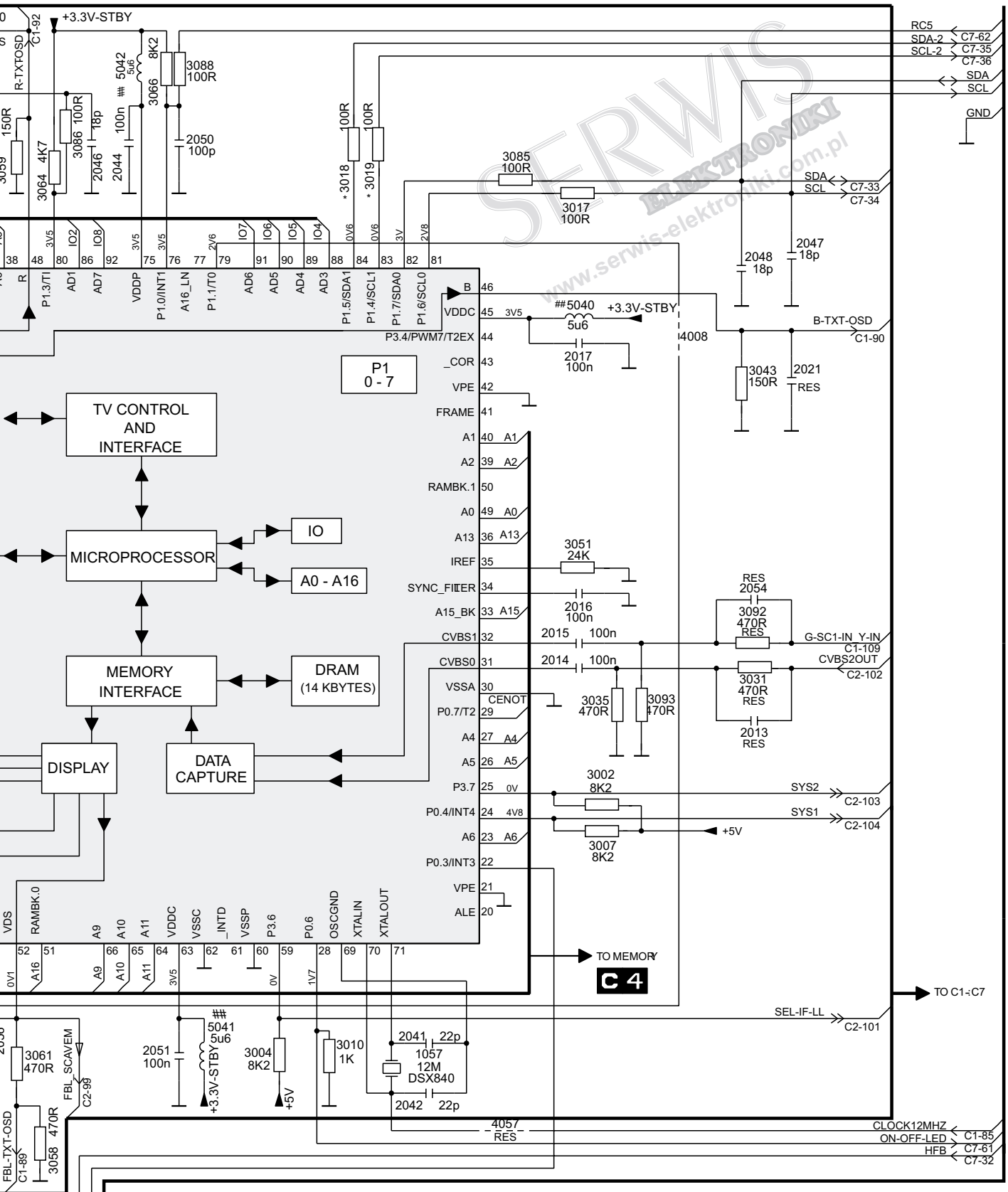

Diversity table for diagram C4

Item	West EU 100Pg Txt	West EU 10Pg Txt	East EU 10Pg Txt	East EU 100Pg Txt
2058	100N 16V	,	,	100N 16V
3028	47K	,	,	47K
3029	10K	,	,	10K
3032	10K	,	,	10K
3033	10K	,	,	10K
3090	10K	,	,	10K
3091	10K	,	,	10K
3094	10K	,	,	10K
5050	5U6	,	,	5U6
6020	1SS355	,	,	1SS355
7022	BC847	,	,	BC847
7070	UPD431000	,	,	UPD431000

Small Signal Board:
U_CONT

OTVC Philips chassis A10E-DPL AA

C 4

Small Signal Board:
MEMORY

OTVC Philips chassis A10E-DPL AA

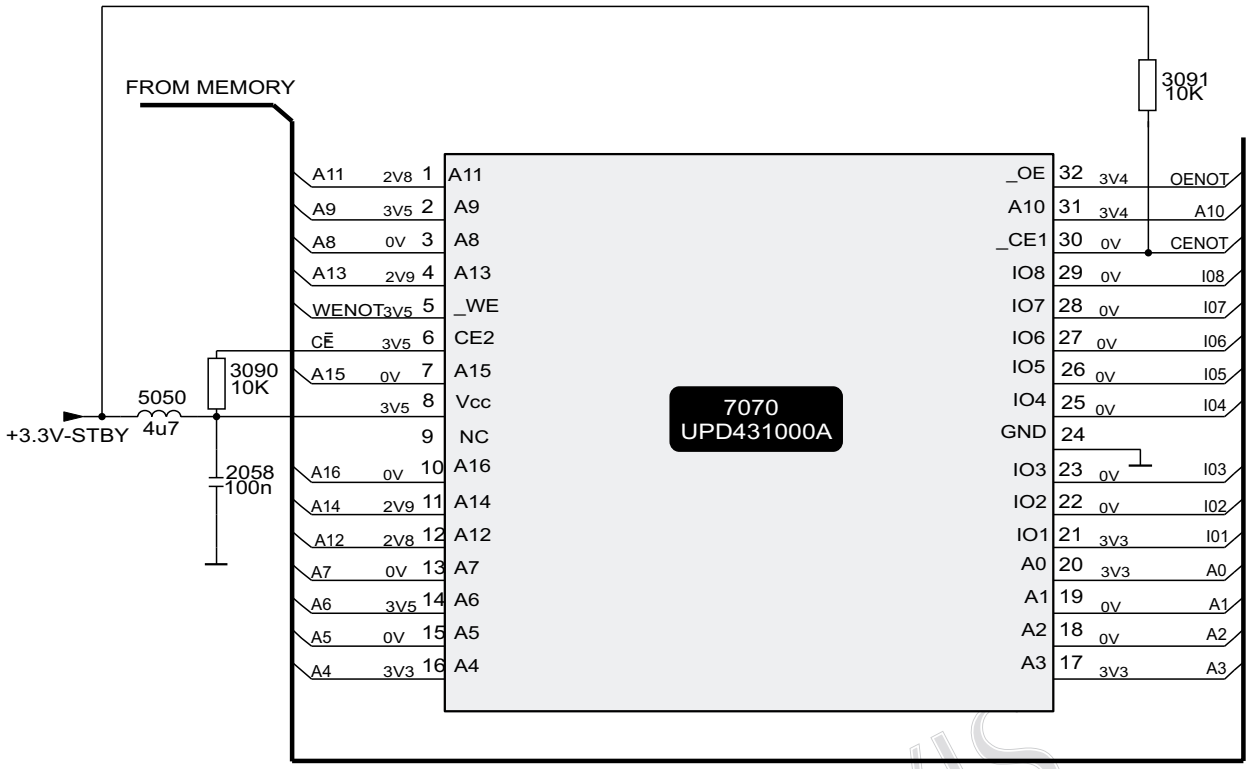

Item	West EU 100Pg Txt	West EU 10Pg Txt	East EU 10Pg Txt	East EU 100Pg Txt
2058	100N 16V	,	,	100N 16V
3028	47K	,	,	47K
3029	10K	,	,	10K
3032	10K	,	,	10K
3033	10K	,	,	10K
3090	10K	,	,	10K
3091	10K	,	,	10K
3094	10K	,	,	10K
5050	5U6	,	,	5U6
6020	1SS355	,	,	1SS355
7022	BC847	,	,	BC847
7070	UPD431000	,	,	UPD431000

SERWIS ELEKTRONIKI www.serwis-elektroniki.com.pl

C 5

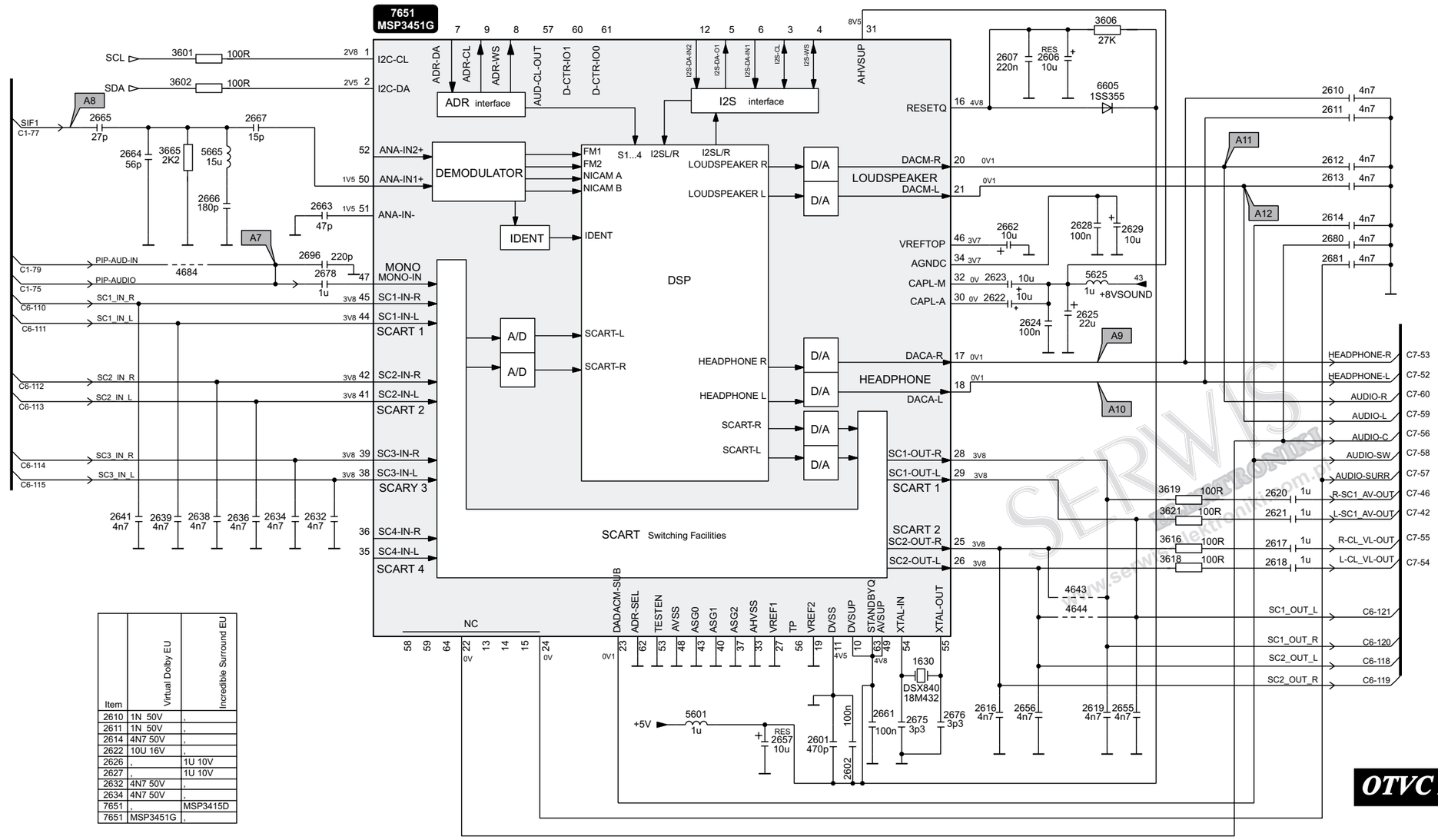

Item	Virtual Dolby EU	Incredible Surround EU
2610	1N 50V	.
2611	1N 50V	.
2614	4N7 50V	.
2622	10U 16V	.
2626	.	1U 10V
2627	.	1U 10V
2632	4N7 50V	.
2634	4N7 50V	.
7651	.	MSP3415D
7651	MSP3451G	.

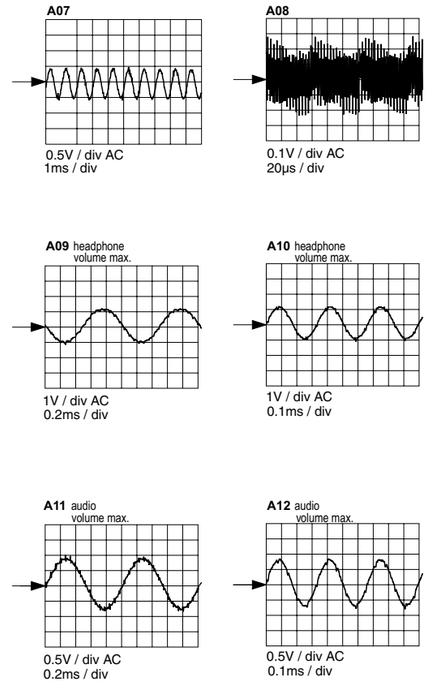

Small Signal Board:
AUDIO PROCESSING

OTVC Philips chassis A10E-DPL AA

Spis schematów

C 5

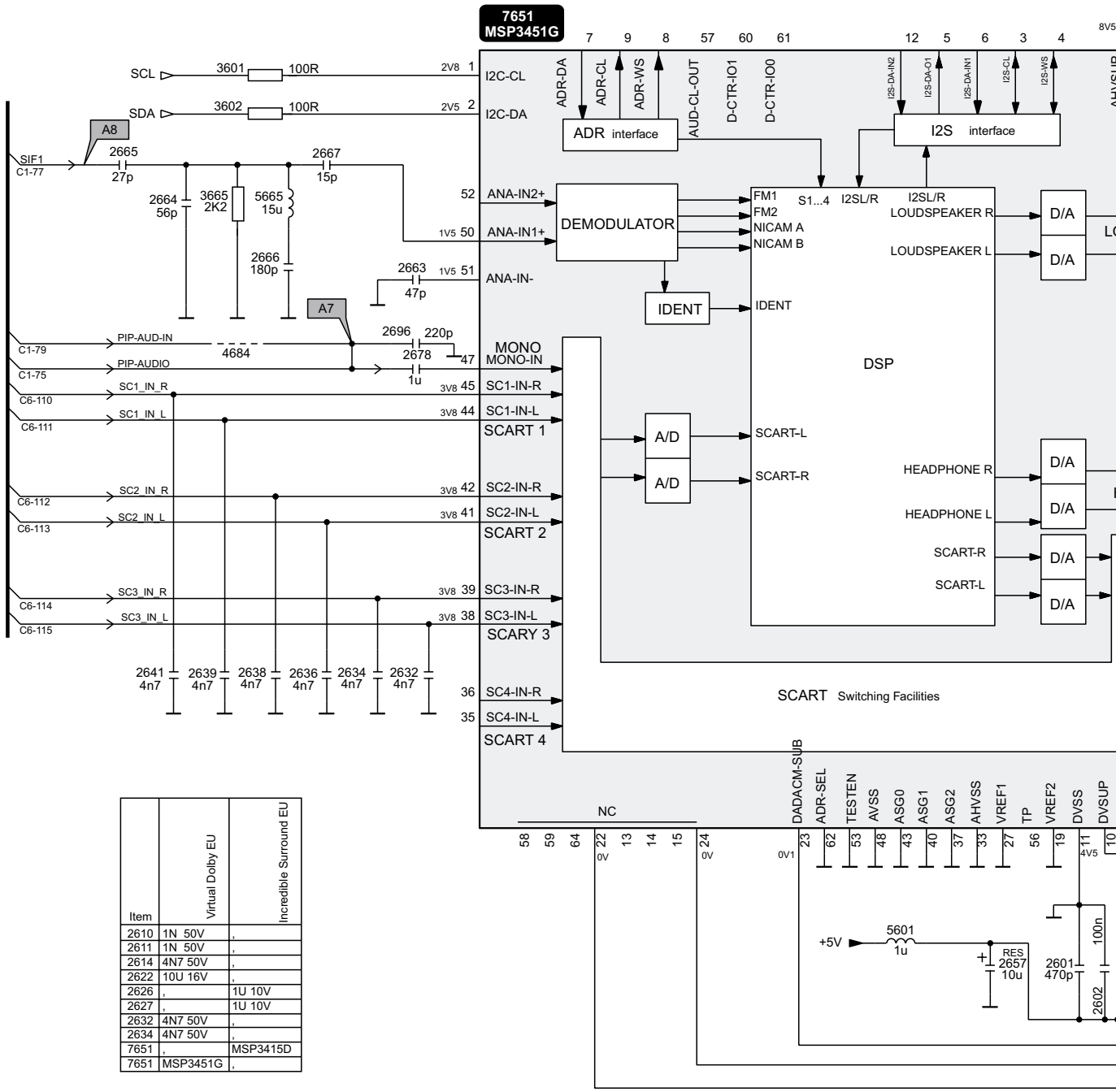

Item	Virtual Dolby EU	Incredible Surround EU
2610	1N 50V	,
2611	1N 50V	,
2614	4N7 50V	,
2622	10U 16V	,
2626	,	1U 10V
2627	,	1U 10V
2632	4N7 50V	,
2634	4N7 50V	,
7651	,	MSP3415D
7651	MSP3451G	,

C 5

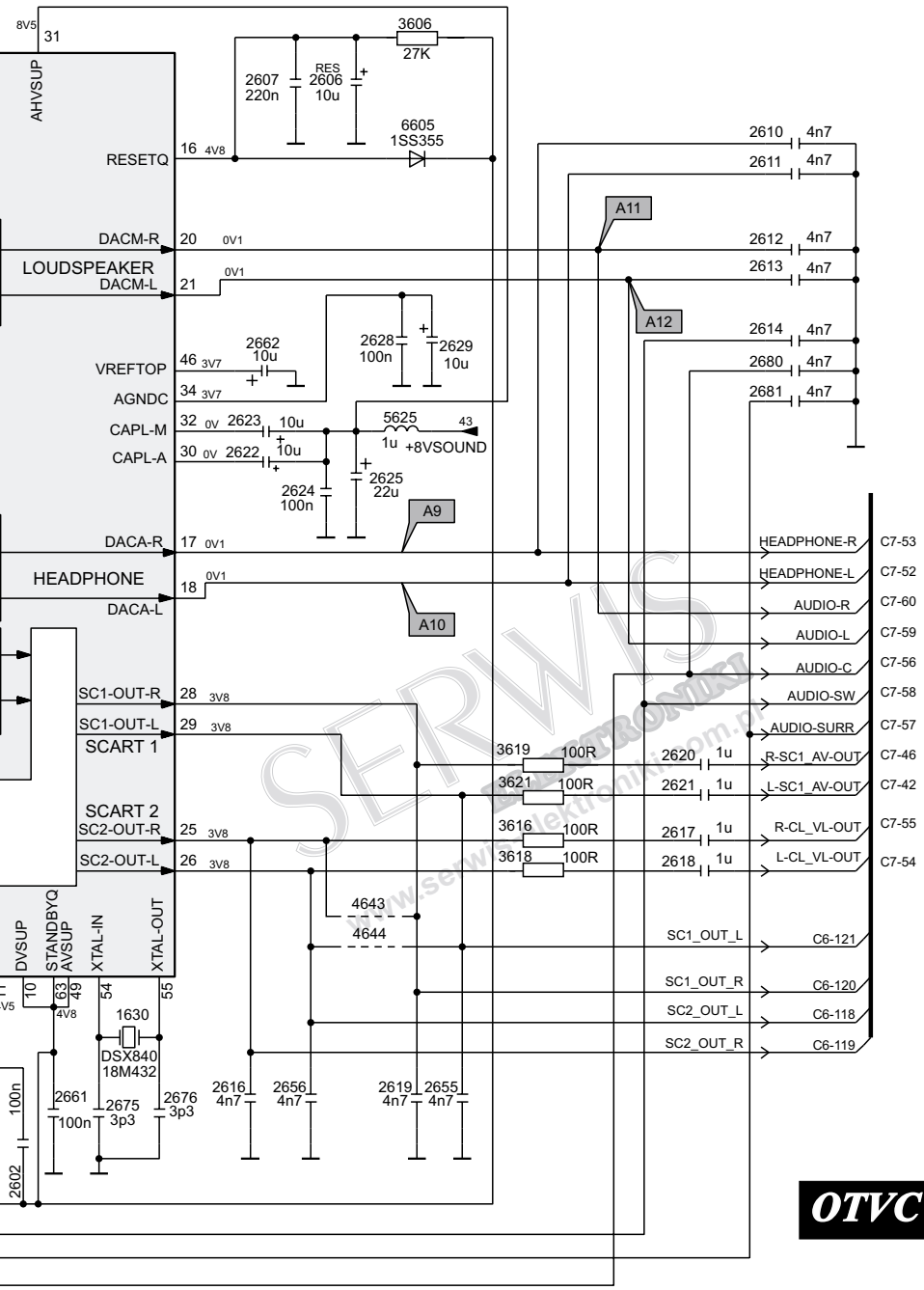

A07

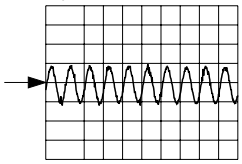

0.5V / div AC
1ms / div

A08

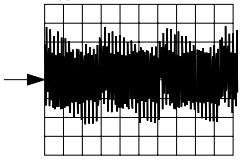

0.1V / div AC
20µs / div

A09 headphone volume max.

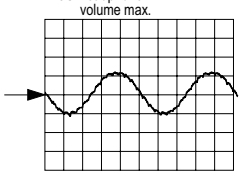

1V / div AC
0.2ms / div

A10 headphone volume max.

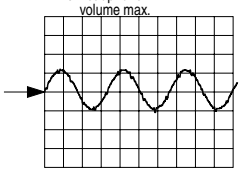

1V / div AC
0.1ms / div

A11 audio volume max.

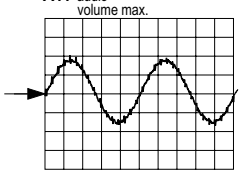

0.5V / div AC
0.2ms / div

A12 audio volume max.

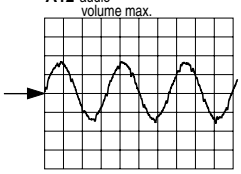

0.5V / div AC
0.1ms / div

Small Signal Board:
AUDIO PROCESSING

OTVC Philips chassis A10E-DPL AA

SERWIS ELEKTRONIKI www.serwis-elektroniki.com.pl

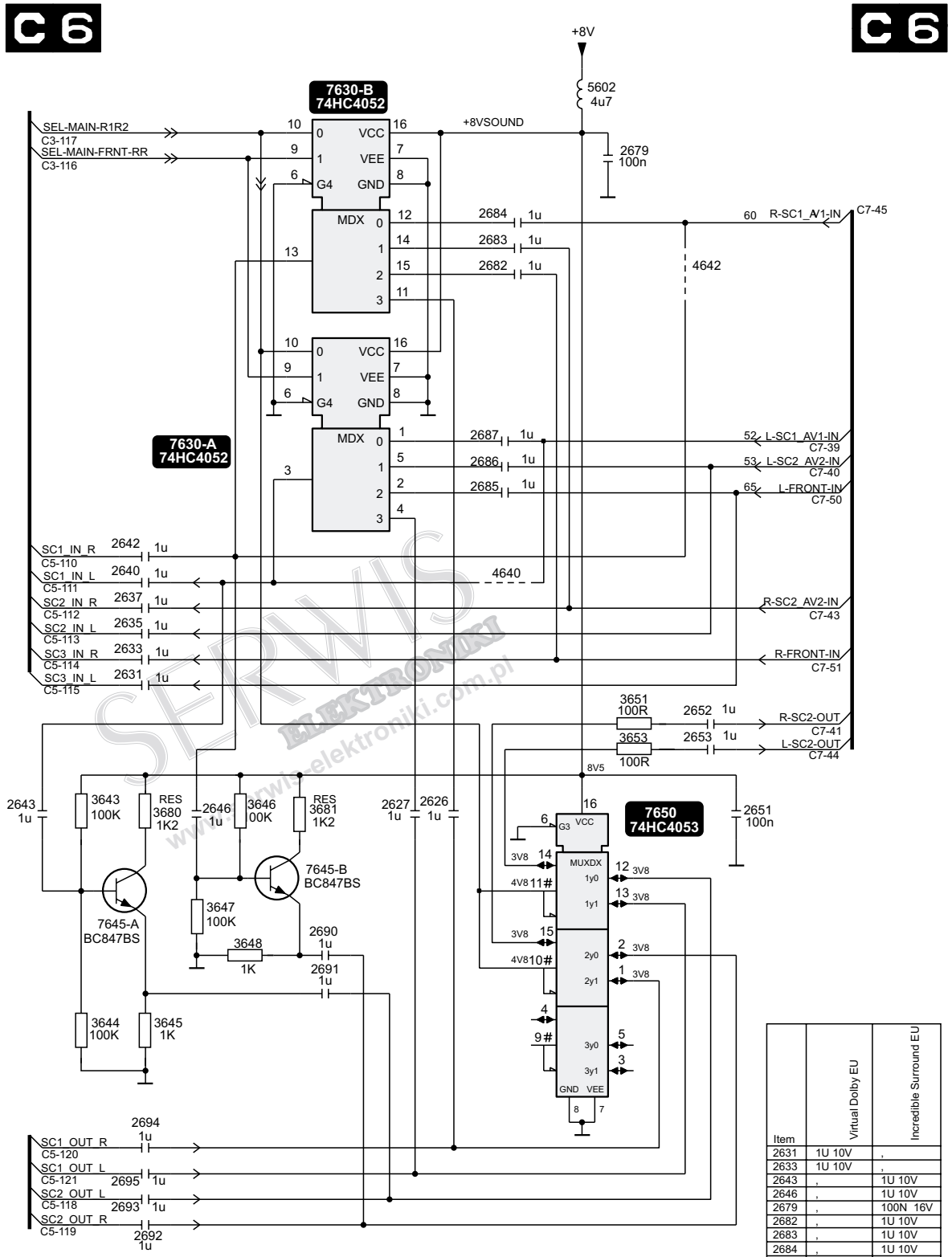

Small Signal Board:

AUDIO PROCESSING

OTVC Philips chassis A10E-DPL AA

Item	Virtual Dolby EU	Incredible Surround EU
2631	1U 10V	,
2633	1U 10V	,
2643	,	1U 10V
2646	,	1U 10V
2679	,	100N 16V
2682	,	1U 10V
2683	,	1U 10V
2684	,	1U 10V
2685	,	1U 10V
2686	,	1U 10V
2687	,	1U 10V
2690	,	1U 10V
2691	,	1U 10V
3643	,	56K
3644	,	100K
3645	,	1K
3646	,	56K
3647	,	100K
3648	,	1K
3680	,	10R
3681	,	10R
4640	jumper	,
4642	jumper	,
7630	,	74HC4052
7645	,	BC847B

C 7

Small Signal Board:
SSB_CONNECTOR

C1 I2C SDA

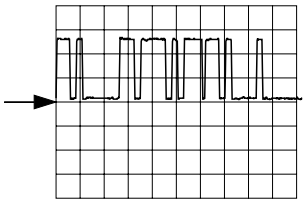

2V / div DC 50µs / div

C2 I2C SCL

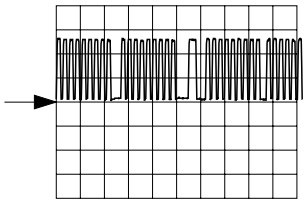

2V / div DC 50µs / div

TO 0226 OF SSP TUNER (S30) **A 4**

I1

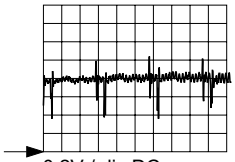

0.2V / div DC
5µs / div

S2

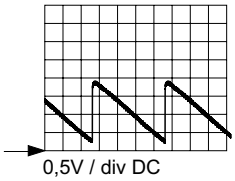

0,5V / div DC
5ms / div

S3

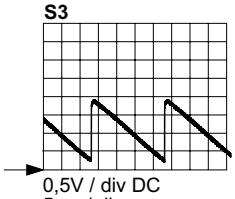

0,5V / div DC
5ms / div

S4

1,0V /div DC
5ms / div

V06

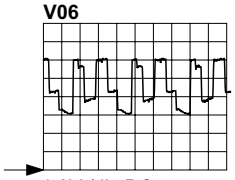

1,0V /div DC
0,5µs / div

V07

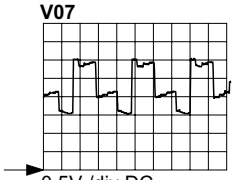

0,5V /div DC
20µs / div

V08

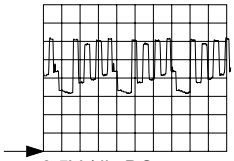

0,5V /div DC
20µs / div

C1-1	0V	B-SC1-IN_U-IN	80
C1-2	0V	G-SC1-IN_Y-IN	79
C1-3	0V	R-SC1_V-IN	78
C1-4	0V	FBL-SC1-IN	77
		GND-RGB-SC1_YUV	76
C2-5	0V	Y-CVBS-SC2_AV2-IN	75
C2-6	0V	C-SC2_SVHS-IN	74
		GND-CVBS-IN	73
C1-7	2V	CVBS-SC2_MON-OUT	72
C2-8	0V	CVBS-SC1_AV1-IN	71
C1-9	1V8	CVBS_TER_OUT	70
		GND-CVBS-OUT	69
C2-10	0V	IF-TER	68
C2-11	0V	GND-IF	67
C1-12	2V	AGC	66
C1-13	2V	CVBS-PIP_TUN1-2-CVBS-IN	65
		GND-PIP	64
C3-14	0V	STATUS1_PIP-AFT_PIP-50-60HZ	63
C3-15	0V	SEL-SVHS-RR_STATUS2	62
C3-16	3V4	COMM_LINE	61
C3-17	5V6	CUTOFF	60
		GND-RGB-CRT	59
C1-18	2V4	B-CRT	58
C1-19	2V2	G-CRT	57
C1-20	2V3	R-CRT	56
C1-21	0V5	LINEDRIVE1	55
		GND-LINEDRIVE	54
C1-22	0V9	FRAMEDRIVE+	53
C1-23	0V	FRAMEDRIVE-	52
			51
C1-24	0V9	EW-DRIVE	50
C1-25	0V8	SC	49
C1-26	4V2	EHT-INFO	48
C1-27	2V8	DYN-FASE-COR	47
C3-28	3V3	TILT	46
C1-29	2V2	PROTN	45
C3-30	3V5	VFB	44
C3-31	0V	PANORAMA	43
C3-32	4V8	HFB	42
	+5V		41
	+3.3V-STBY		40
		GND-SSP	39
	+8V		38
			37
			36
C3-33	2V5	SDA	35
C3-34	2V8	SCL	34
C3-35	0V6	SDA-2	33
C3-36	0V6	SCL-2	32
C3-37	0V	STAND-BY	31
C3-38	3V5	SOUND-ENABLE	30
C6-39	0V	L-SC1_AV1-IN	29
C6-40	0V	L-SC2_AV2-IN	28
		GND-SCART_VIN	27
C6-41	0V	L-SC2-OUT	26
C5-42	0V	L-SC1_AV-OUT	25
		GND-SCART_OUT	24
C6-43	0V	R-SC2_AV2-IN	23
C6-44	0V	R-SC2-OUT	22
C6-45	0V	R-SC1_AV1-IN	21
C5-46	0V	R-SC1_AV-OUT	20
C3-47	3V5	FRONT-DETECT	19
C2-48	0V	Y-CVBS-FRONT-IN	18
C2-49	0V	C-FRONT-IN	17
C6-50	0V	L-FRONT-IN	16
C6-51	0V	R-FRONT-IN	15
C5-52	0V1	HEADPHONE-L	14
C5-53	0V1	HEADPHONE-R	13
C5-54	0V	L-CL_VL-OUT	12
C5-55	0V	R-CL_VL-OUT	11
		GND-AUDIO-OUT	10
C5-56	0V	AUDIO-C	9
C5-57	0V	AUDIO-SURR	8
C5-58	0V1	AUDIO-SW	7
C5-59	0V1	AUDIO-L	6
C5-60	0V1	AUDIO-R	5
C3-61	1V7	ON-OFF-LED	4
C3-62	3V5	RC5	3
C3-63	3V5	KEYBOARD	2
C3-64	0V	LIGHT-SENSOR_VDEGAUSS	1

I1 V8 V7 V6 S3 S2 S4 C1 C4 C2 C3

spo-lib-0002
0226

C3 I2C SCL-2

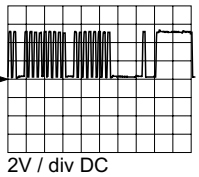

2V / div DC
50µs / div

C4 I2C SDA-2

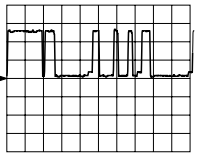

2V / div DC
50µs / div

SERWIS ELEKTRONIKI www.serwis-elektroniki.com.pl

Spis schematów

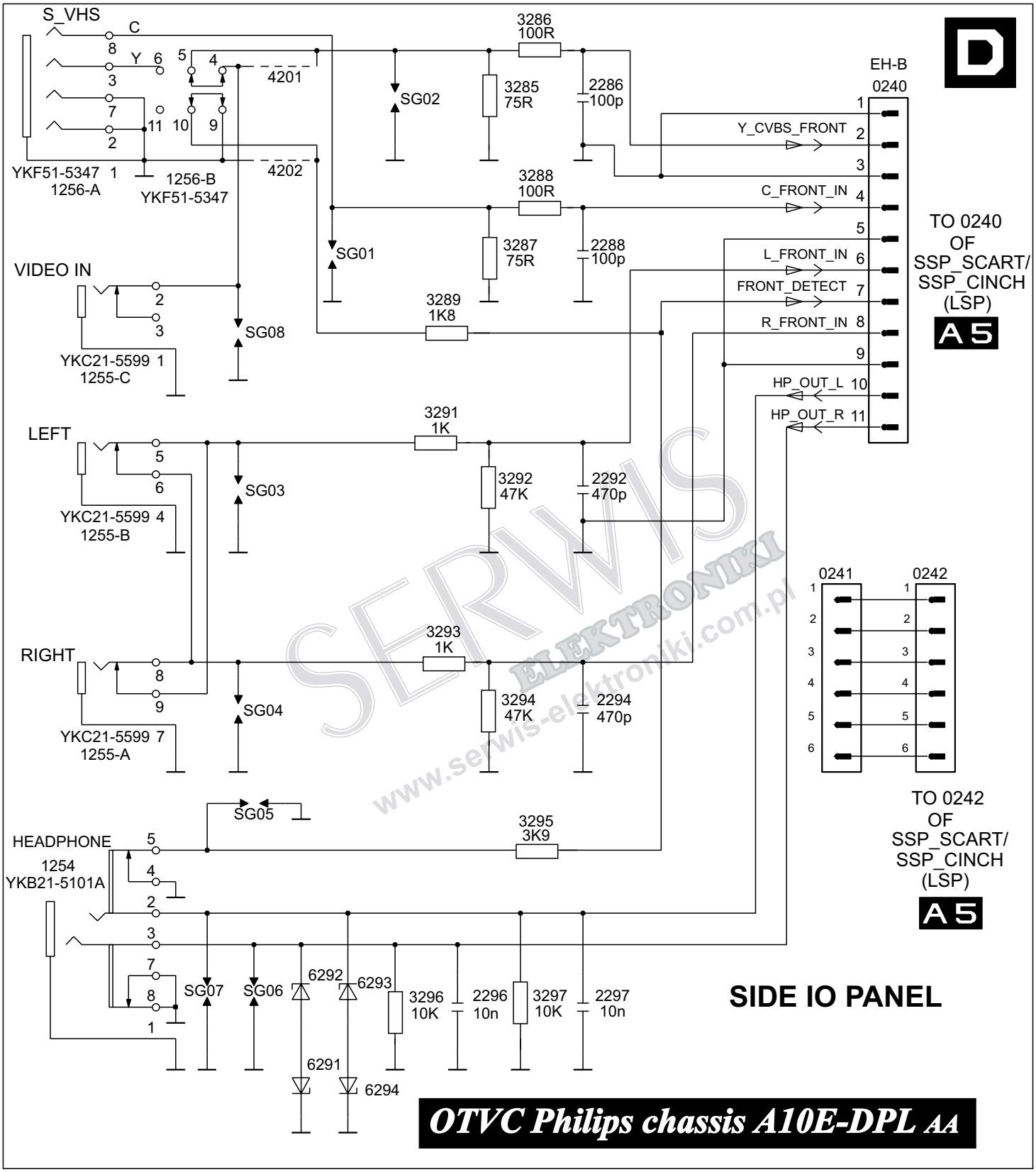

SERWIS ELEKTRONIKI www.serwis-elektroniki.com.pl

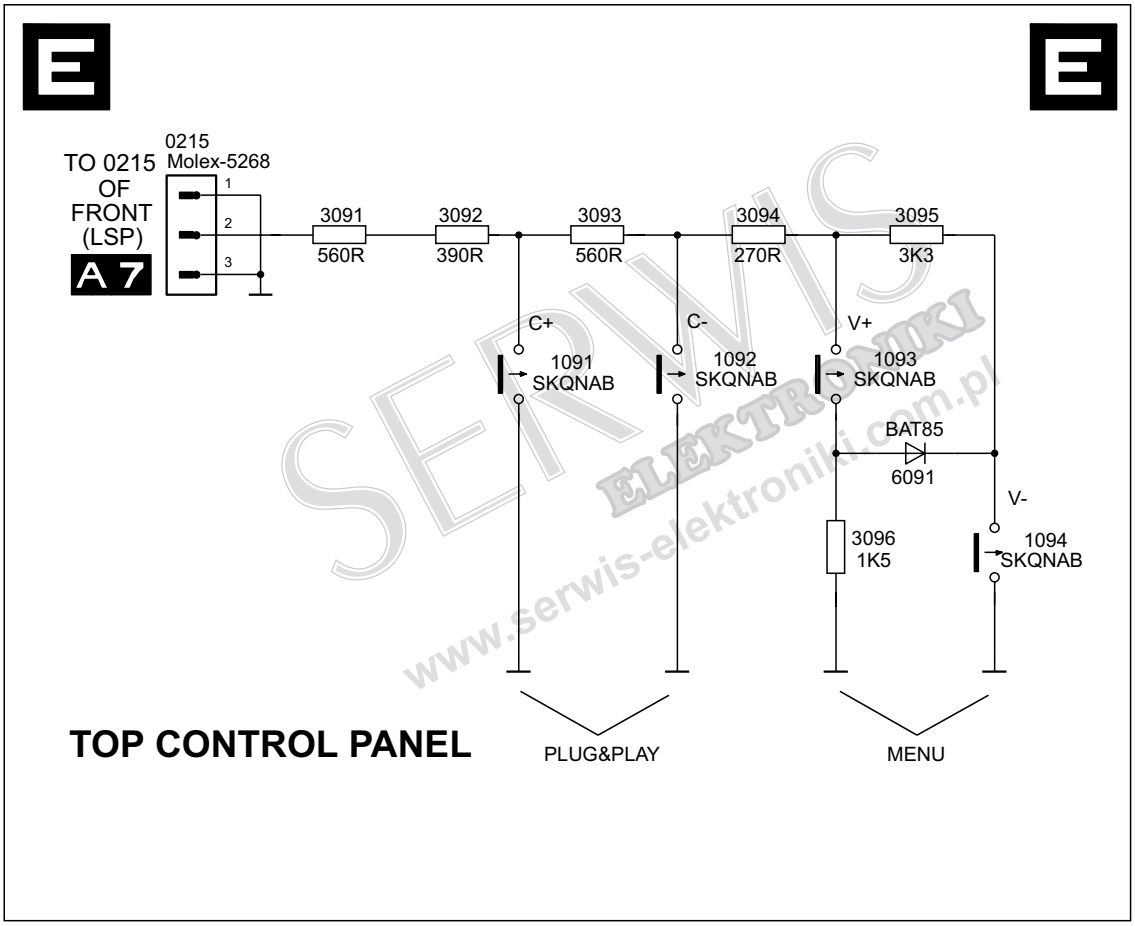

SERWIS ELEKTRONIKI www.serwis-elektroniki.com.pl

OTVC Philips chassis A10E-DPL AA

OTVC Philips chassis A10E-DPL AA

DPL POWER SUPPLY

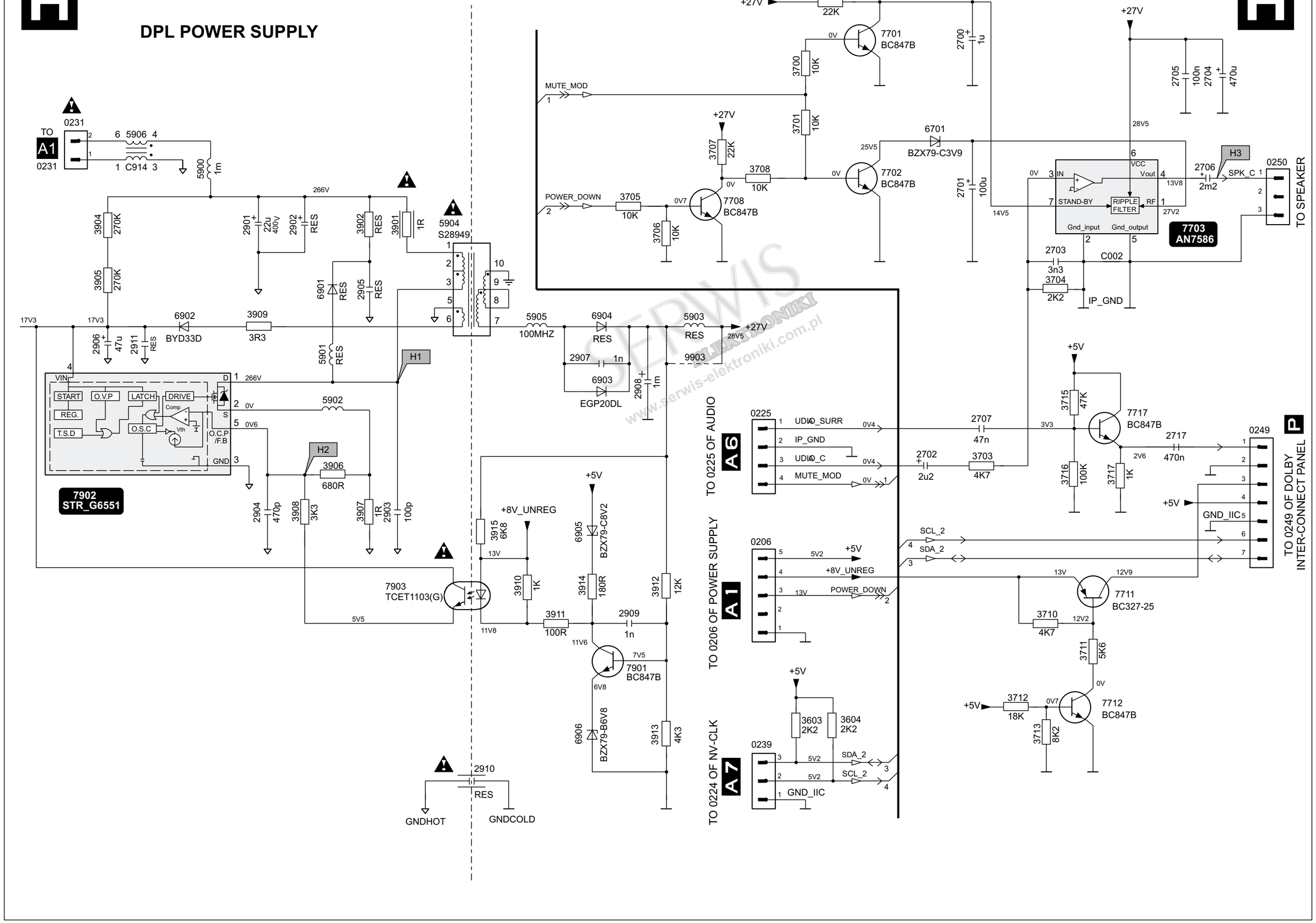

SERWIS ELEKTRONIKI www.serwis-elektroniki.com.pl

OTVC Philips chassis A10E-DPL AA

DPL POWER SUPPLY

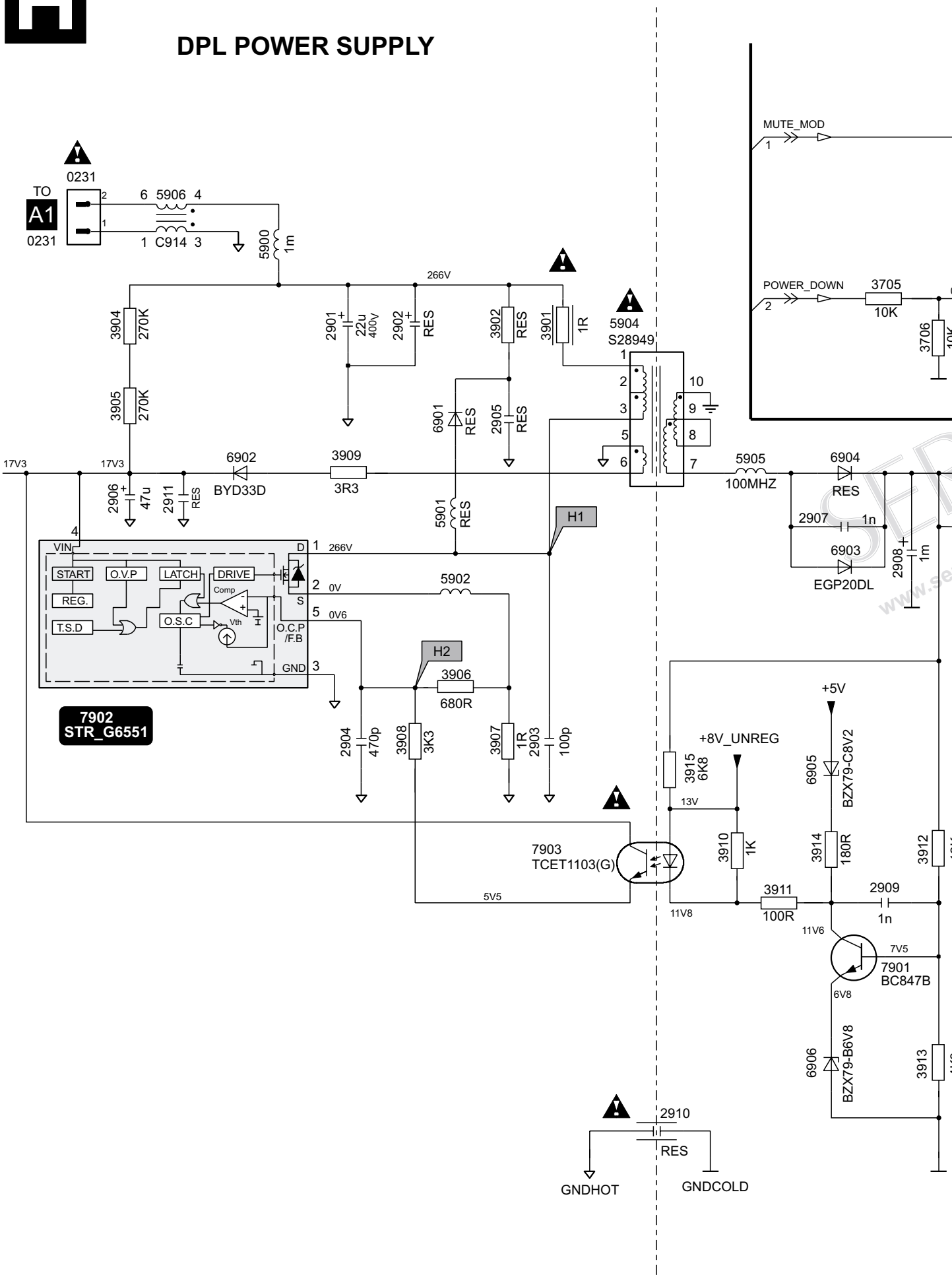

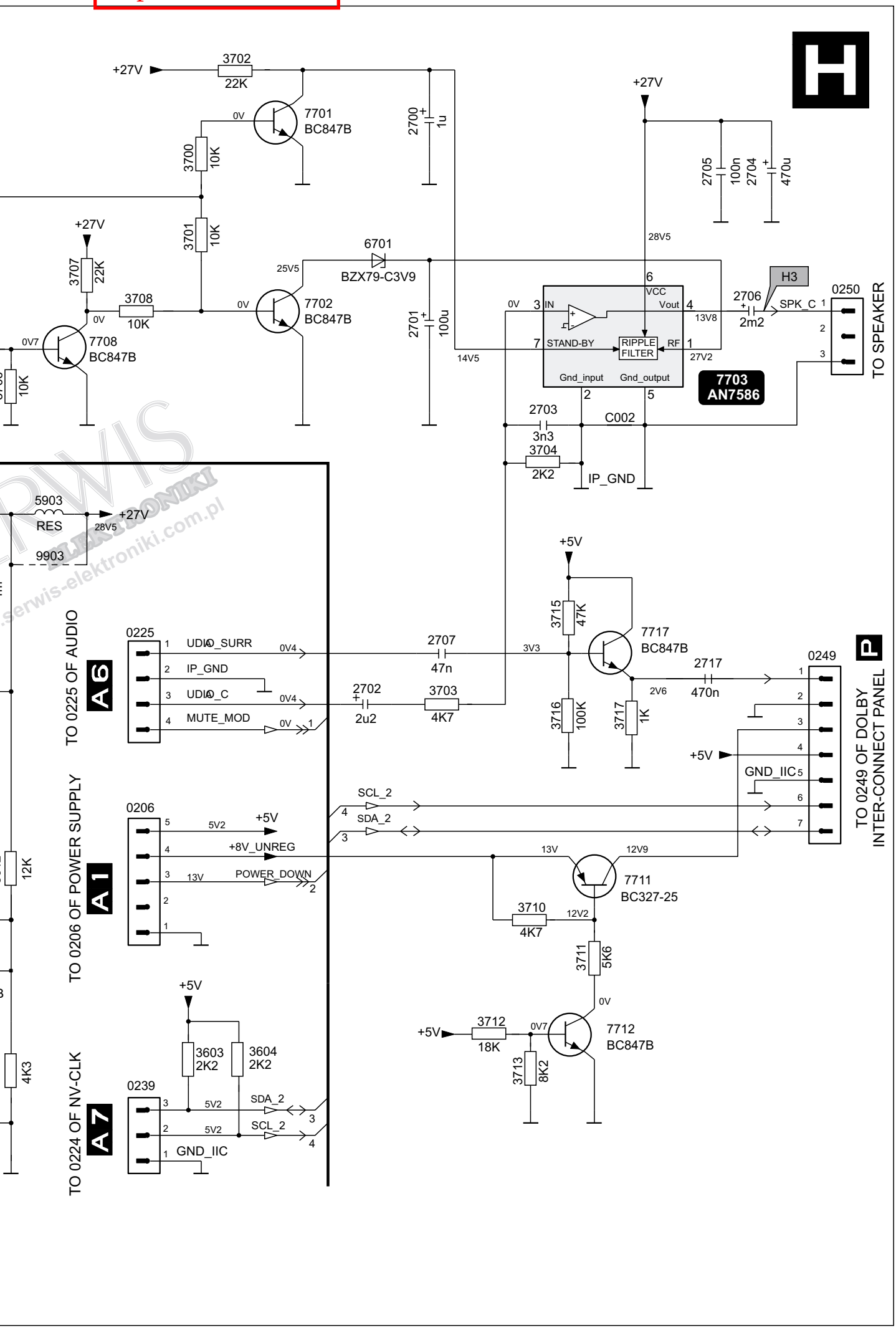

SERWIS ELEKTRONIKI
www.serwis-elektroniki.com.pl

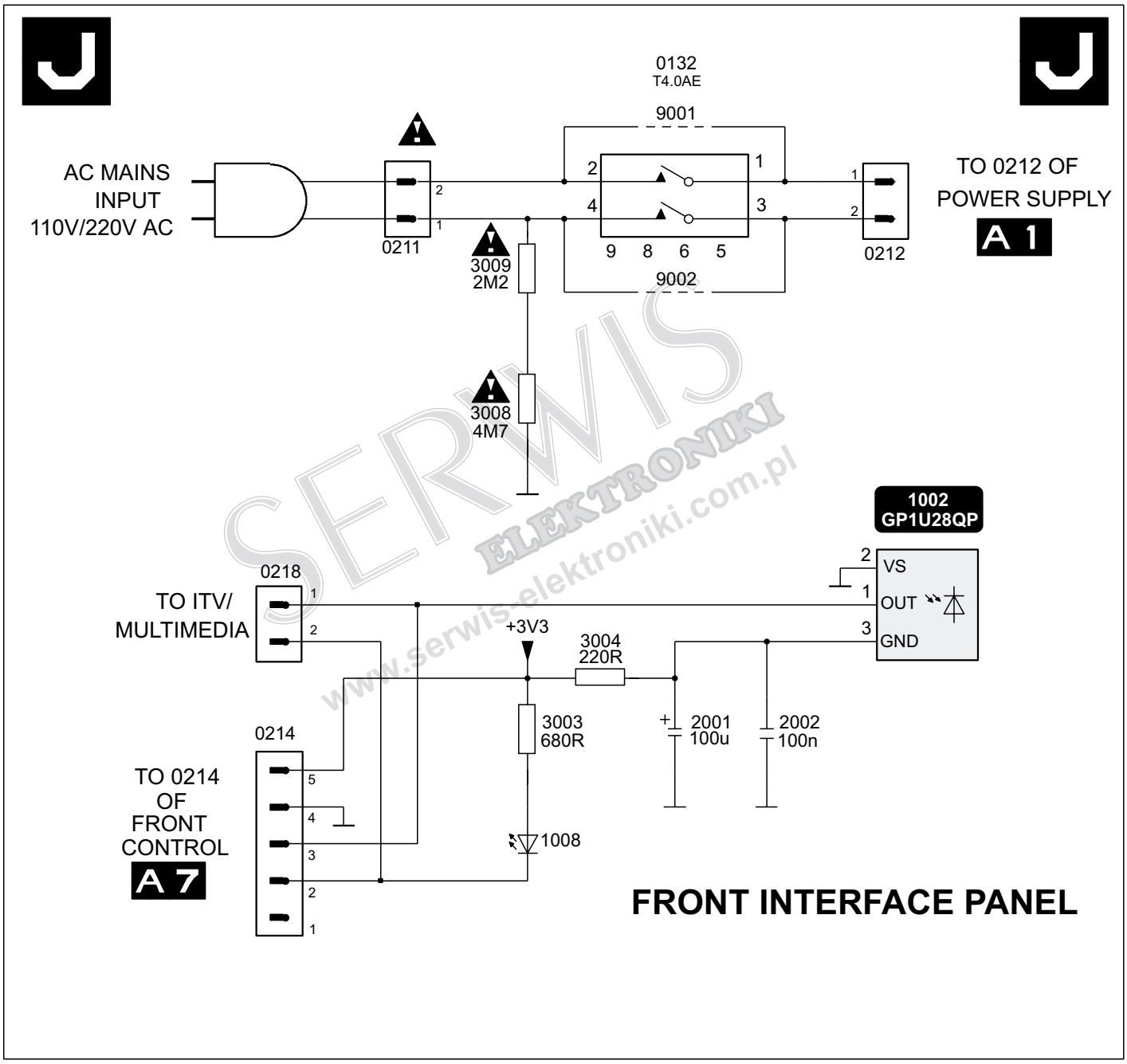

SERWIS ELEKTRONIKI www.serwis-elektroniki.com.pl

OTVC Philips chassis A10E-DPL AA

Spis schematów

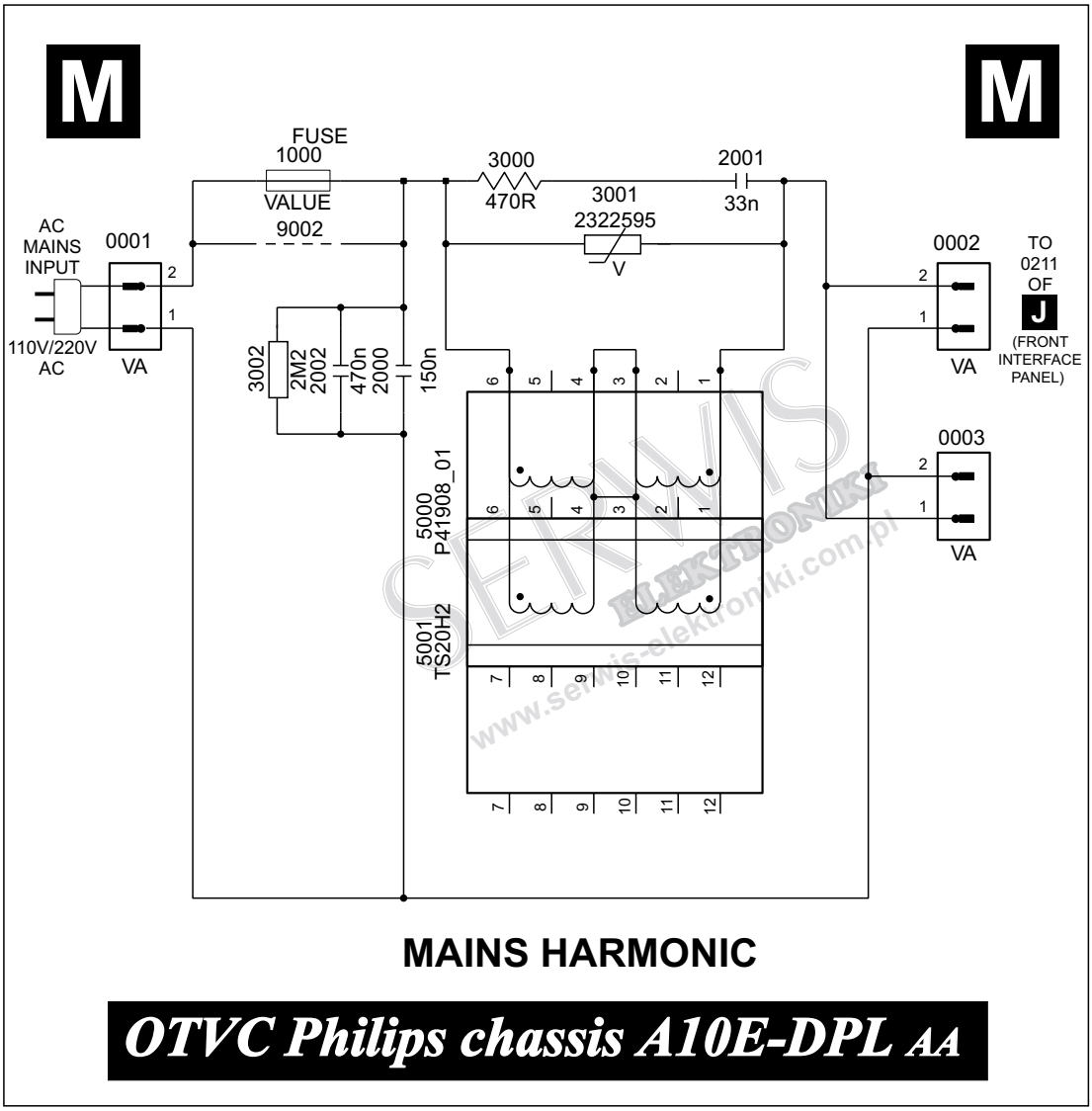

MAINS HARMONIC

OTVC Philips chassis A10E-DPL AA

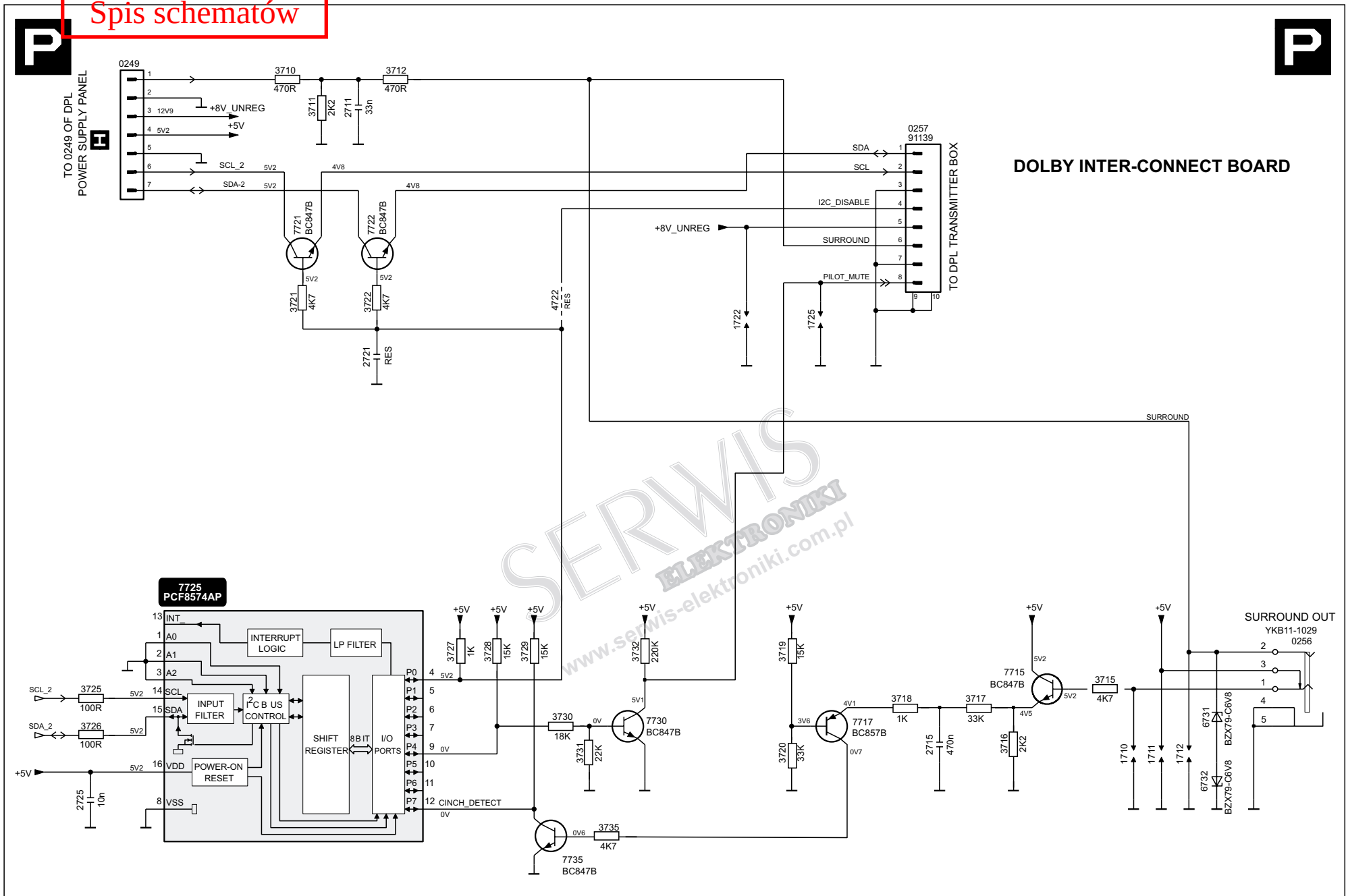

SERWIS ELEKTRONIKI www.serwis-elektroniki.com.pl

OTVC Philips chassis A10E-DPL AA

Spis schematów

OTVC Philips chassis A10E-DPL AA

#	NOT USED
*	ONLY FOR 310421706340
■	ONLY FOR 310421706840

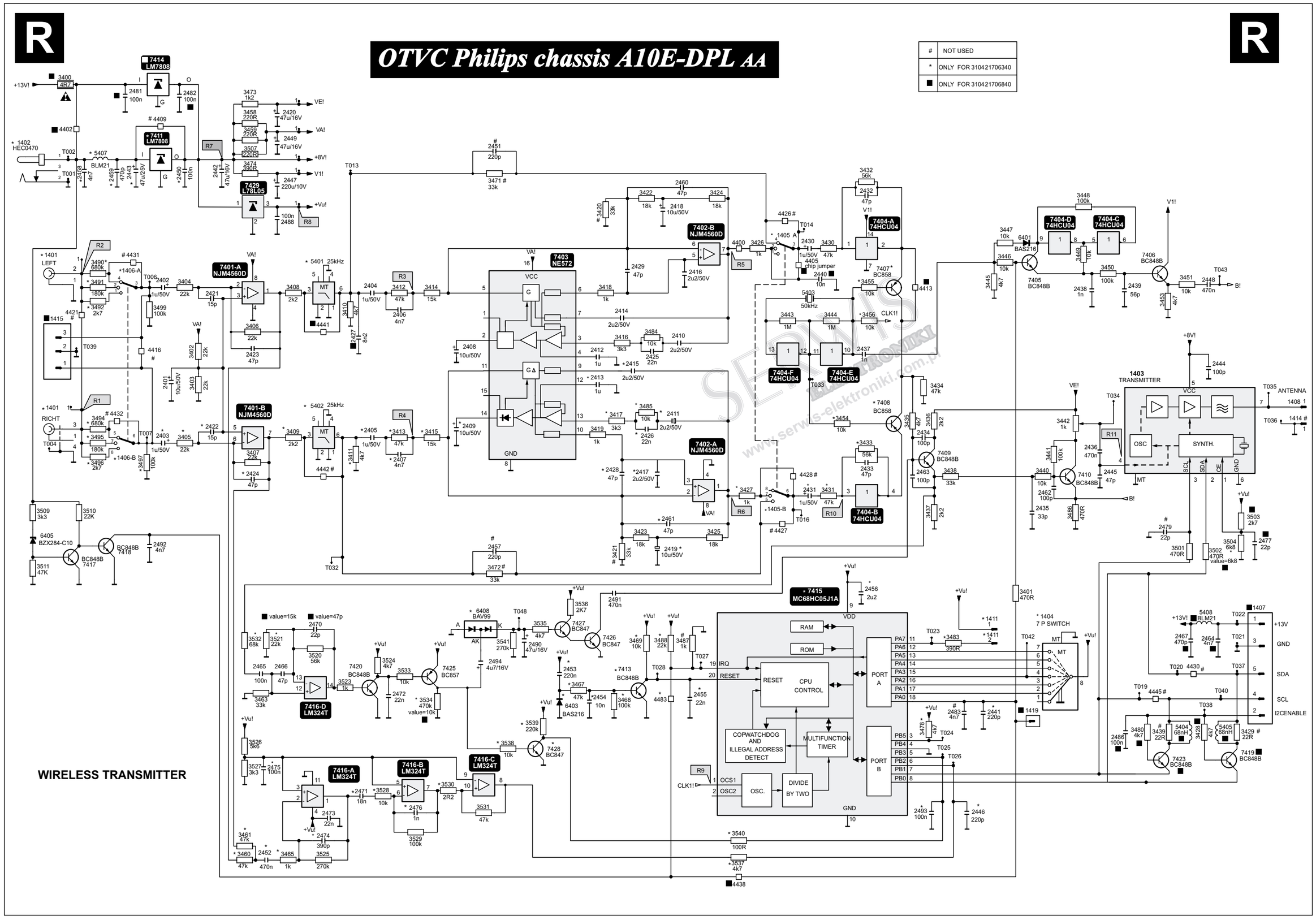

Spis schematów

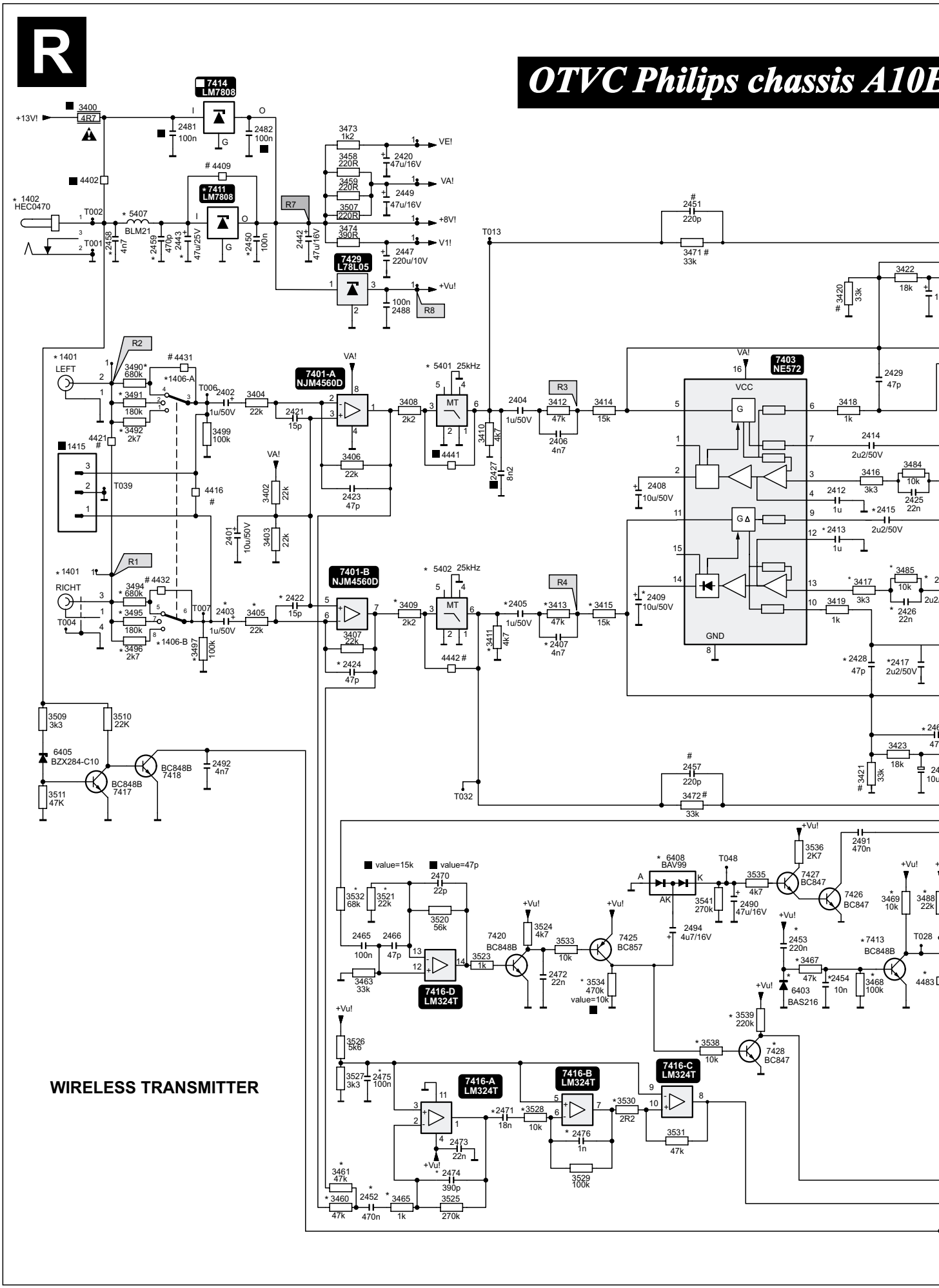

0E-DPL AA

R

#	NOT USED
*	ONLY FOR 310421706340
■	ONLY FOR 310421706840

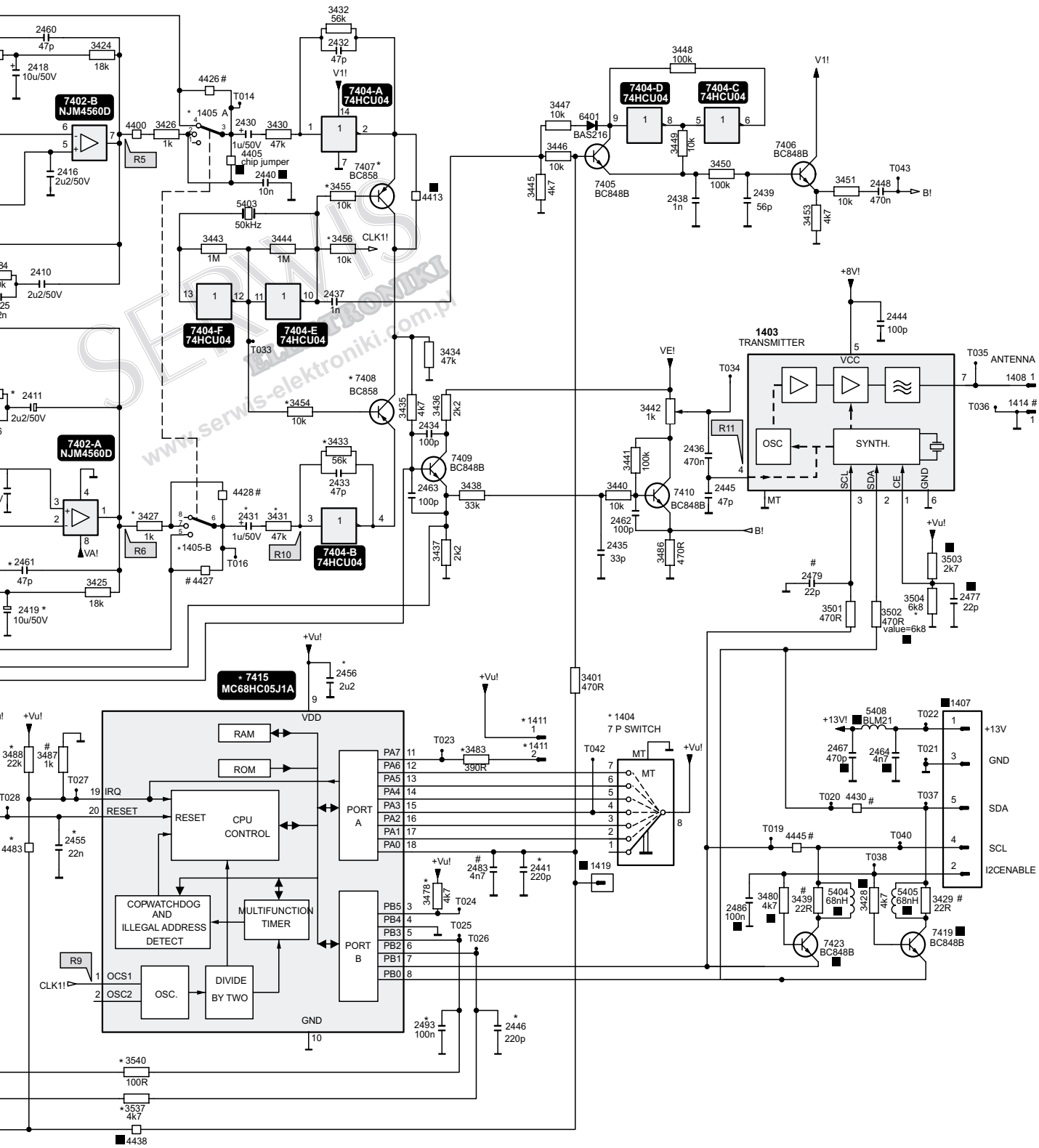

SERWIS ELEKTRONIKI www.serwis-elektroniki.com.pl

WIRELESS SURROUND RECEIVER

OTVC Philips chassis A10E-DPL AA

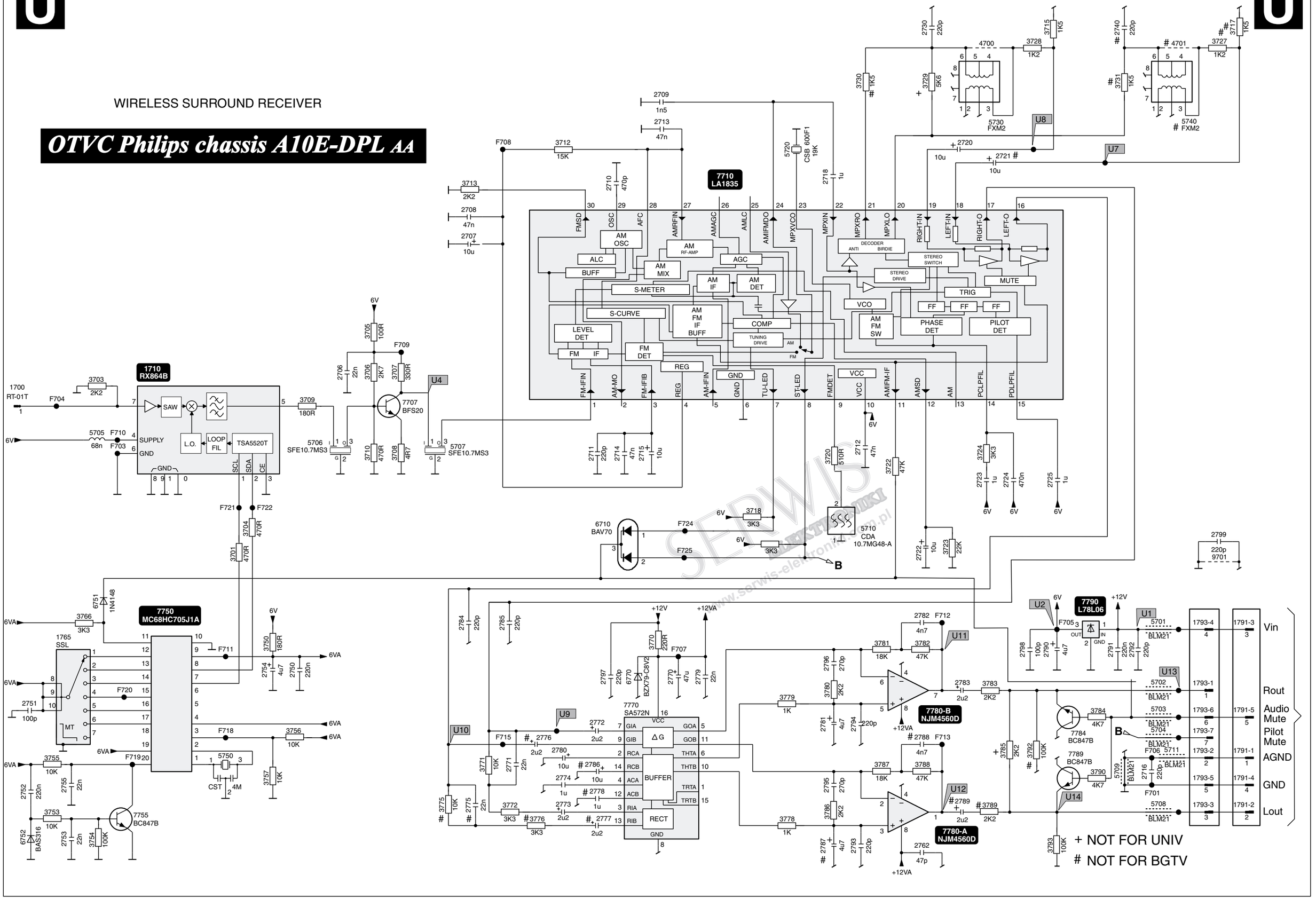

WIRELESS SURROUND RECEIVER

OTVC Philips chassis A10E-DPL AA

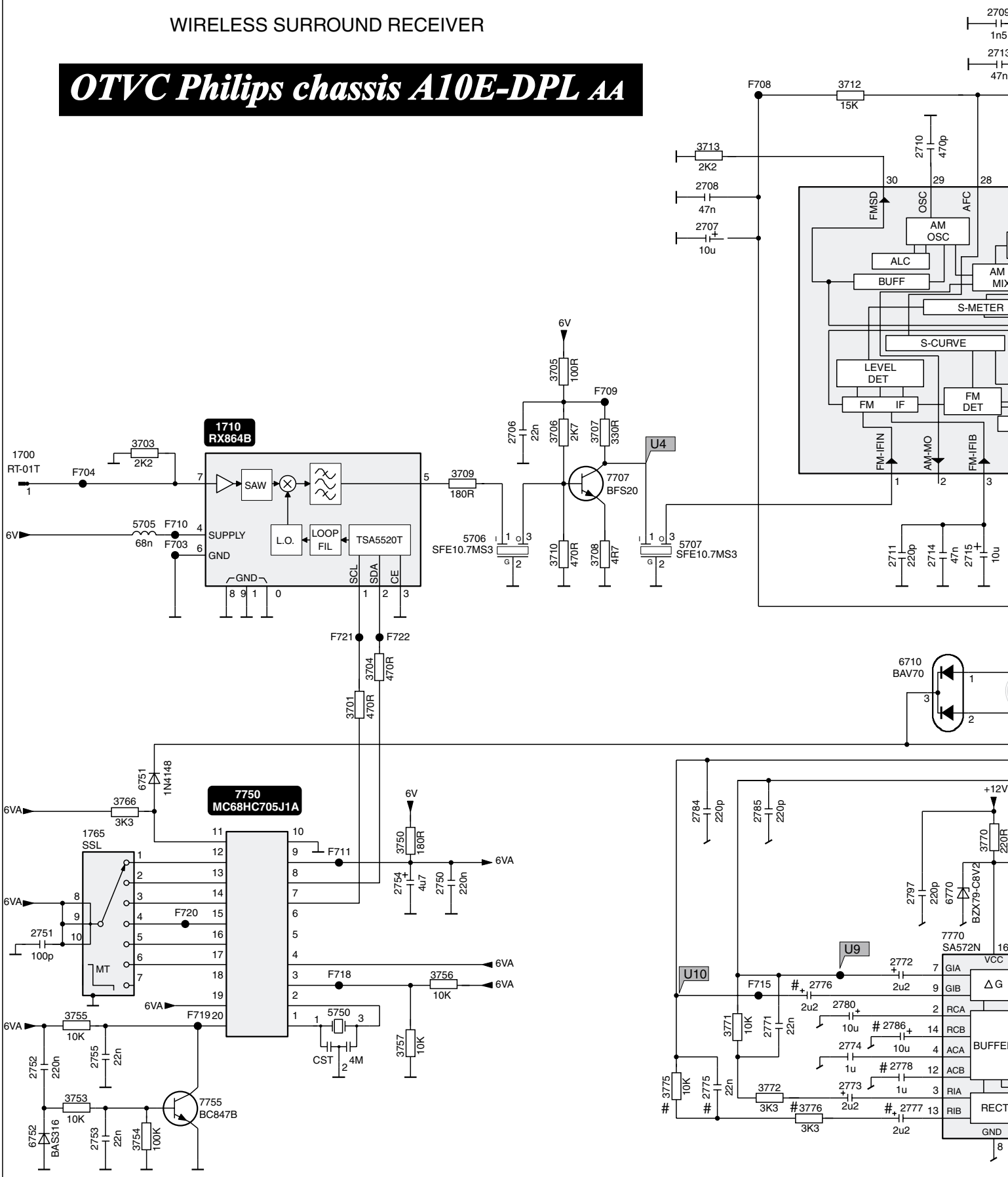

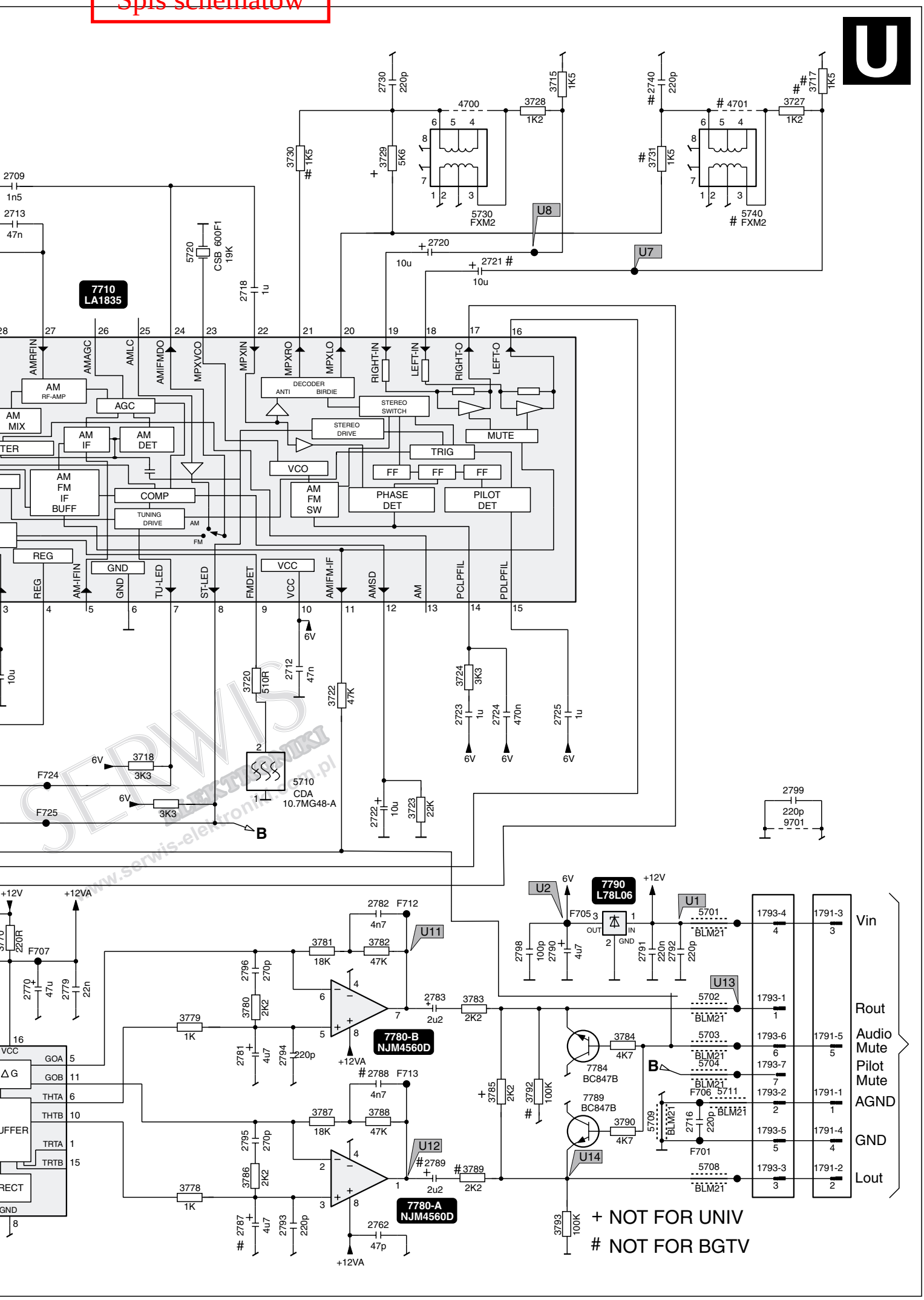

SERWIS ELEKTRONIKI
www.serwis-elektroniki.com.pl

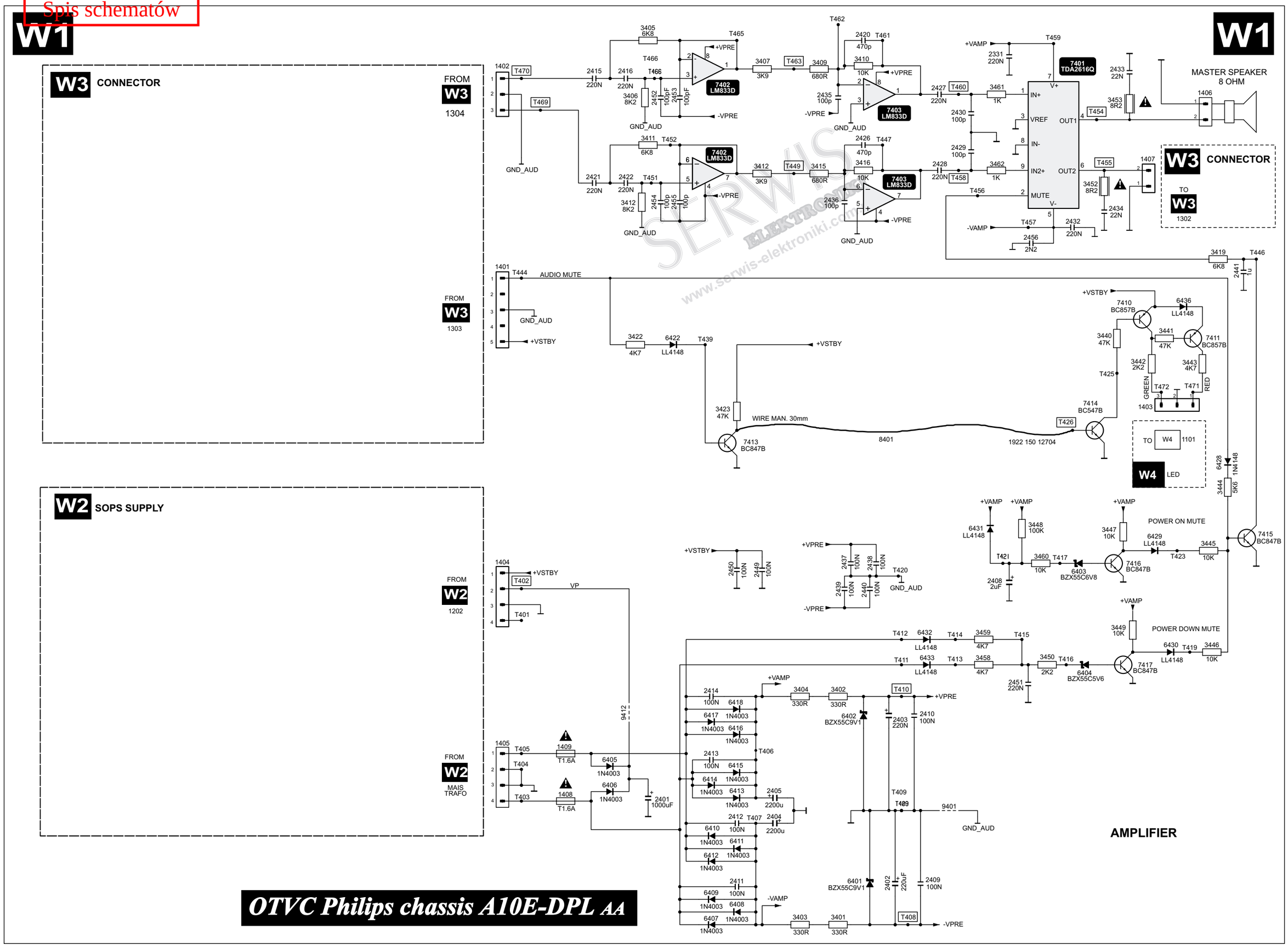

OTVC Philips chassis A10E-DPL AA

Spis schematów

W1

W3 CONNECTOR

FROM W3 1304

FROM W3 1303

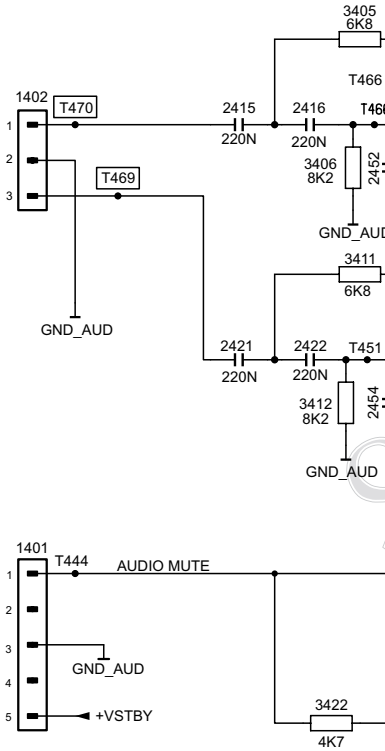

W2 SOPS SUPPLY

FROM W2 1202

FROM W2 MAIS TRAFO

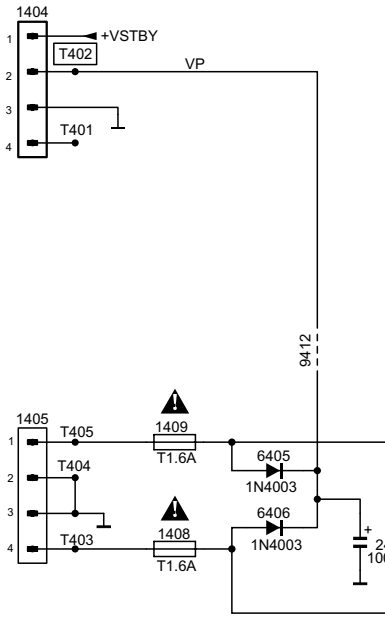

OTVC Philips chassis A10E-DPL AA

Spis schematów

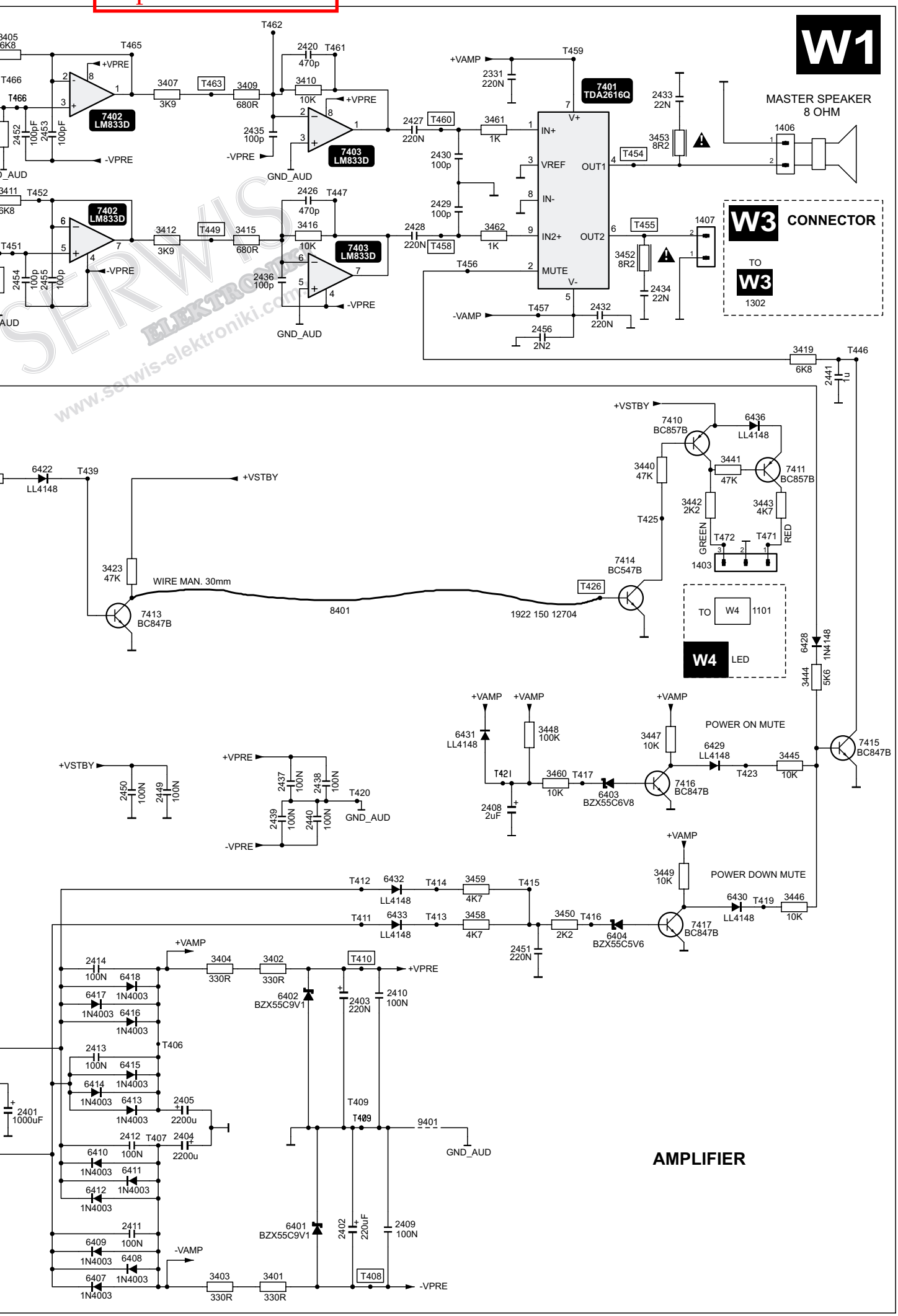

SERWIS ELEKTRONIKI
www.serwis-elektroniki.com

Spis schematów

OTVC Philips chassis A10E-DPL AA

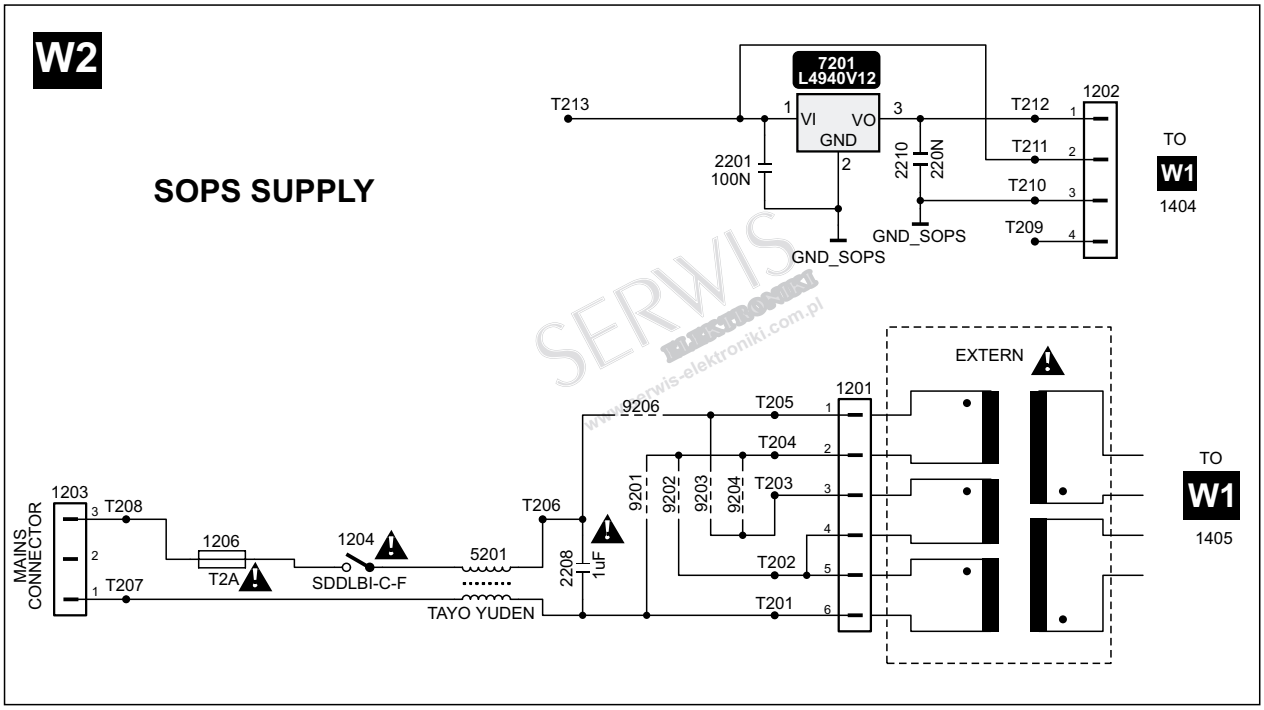

Spis schematów

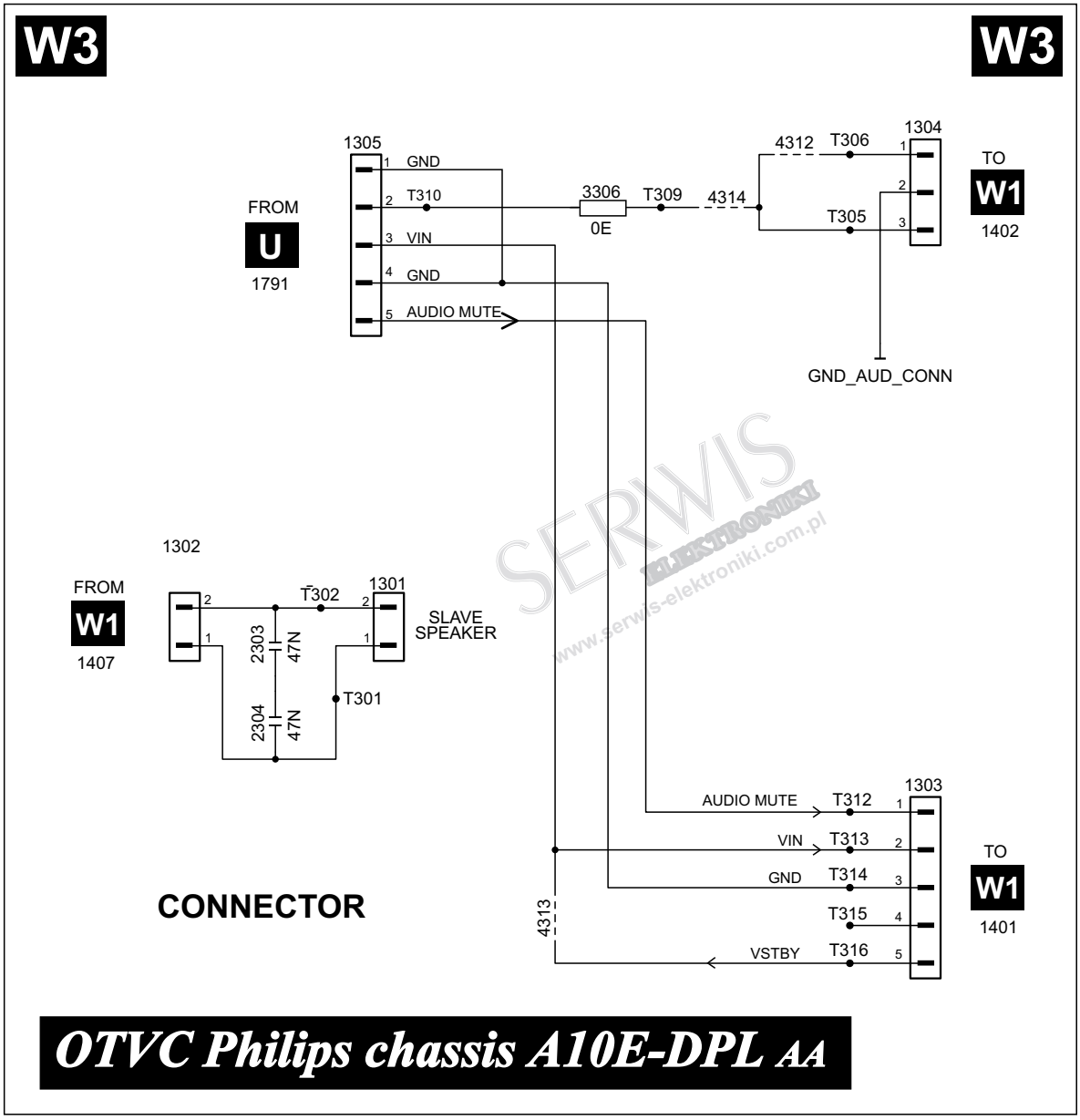

OTVC Philips chassis A10E-DPL AA

W4

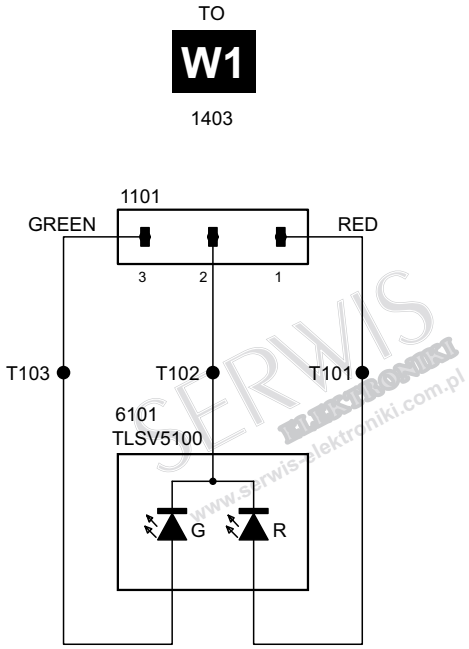

SERWIS ELEKTRONIKI
www.serwis-elektroniki.com.pl

LED	SIGNAL DETECTED
GREEN	YES
RED	NO

LED

OTVC Philips chassis A10E-DPL AA

Spis schematów

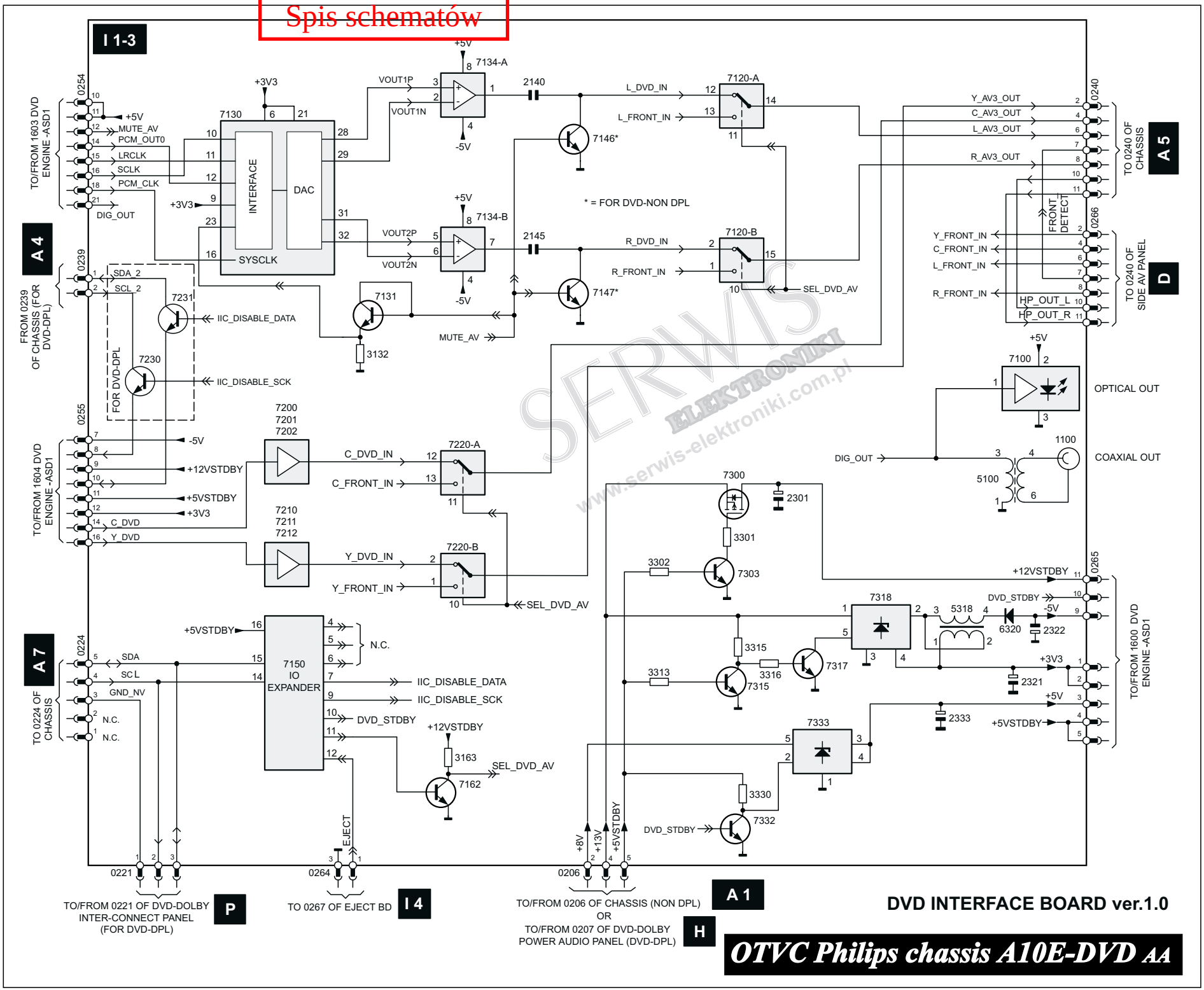

SERWIS ELEKTRONIKI www.serwis-elektroniki.com.pl

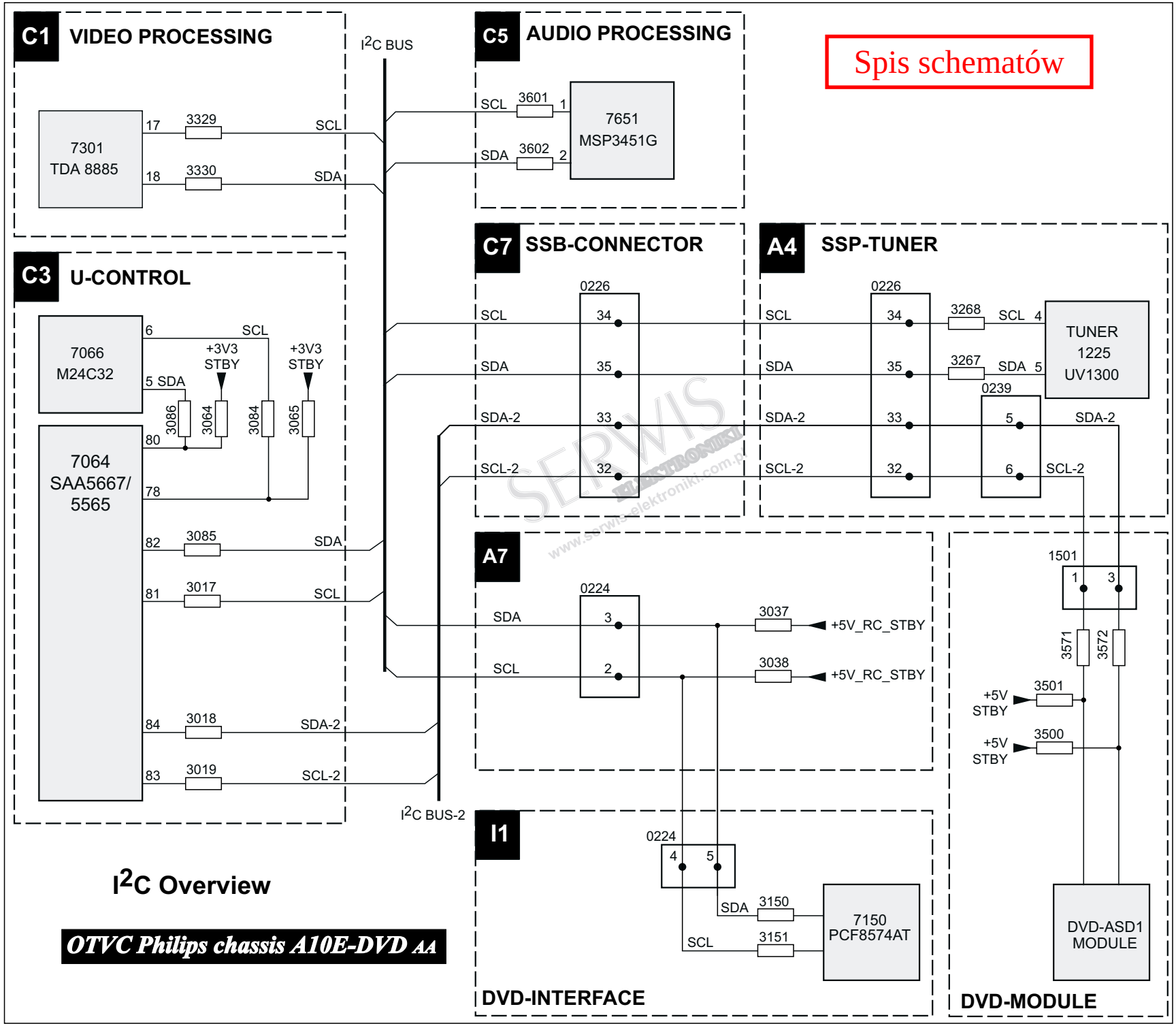

SERWIS ELEKTRONIKI www.serwis-elektroniki.com.pl

Spis schematów

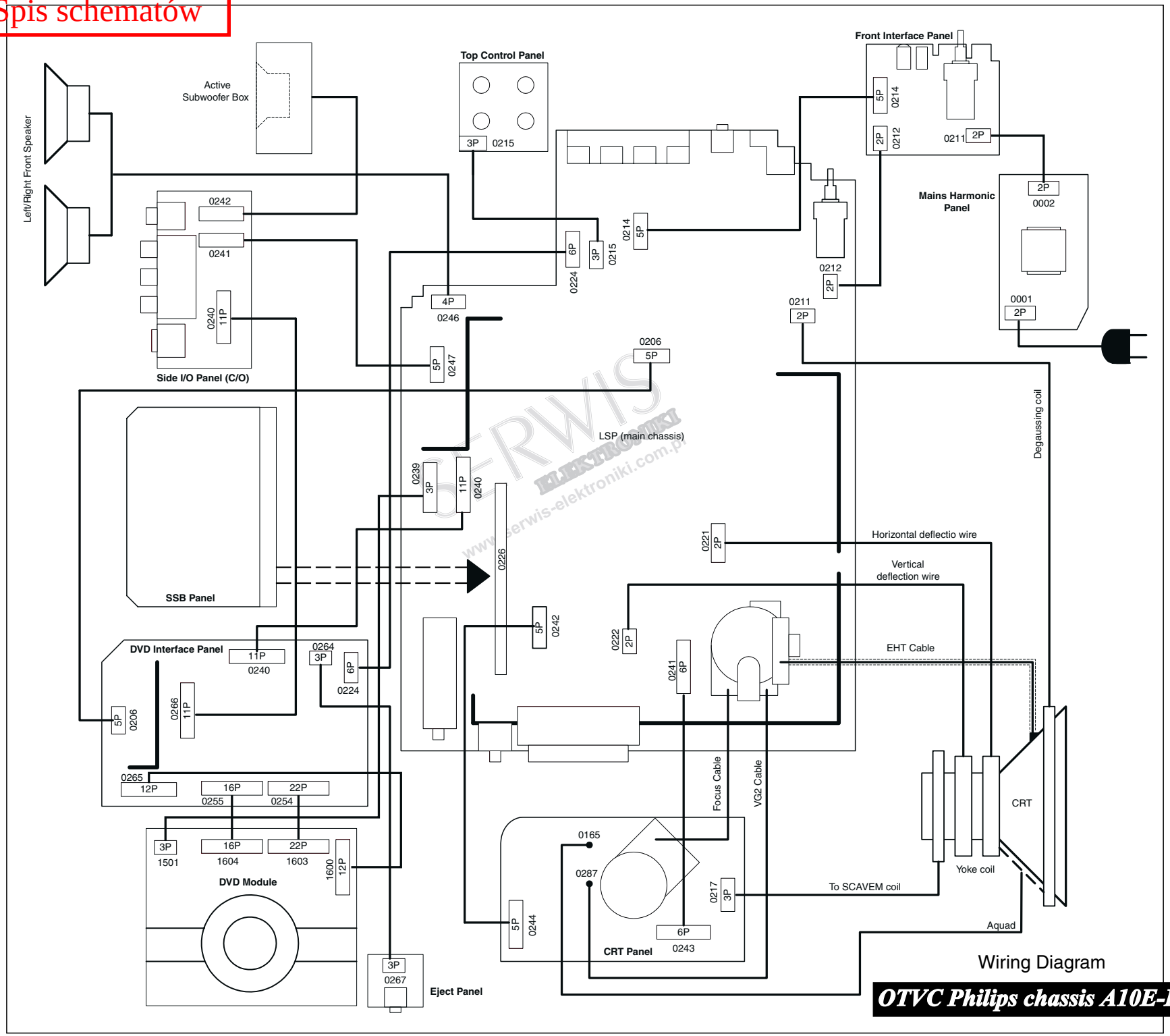

I 1

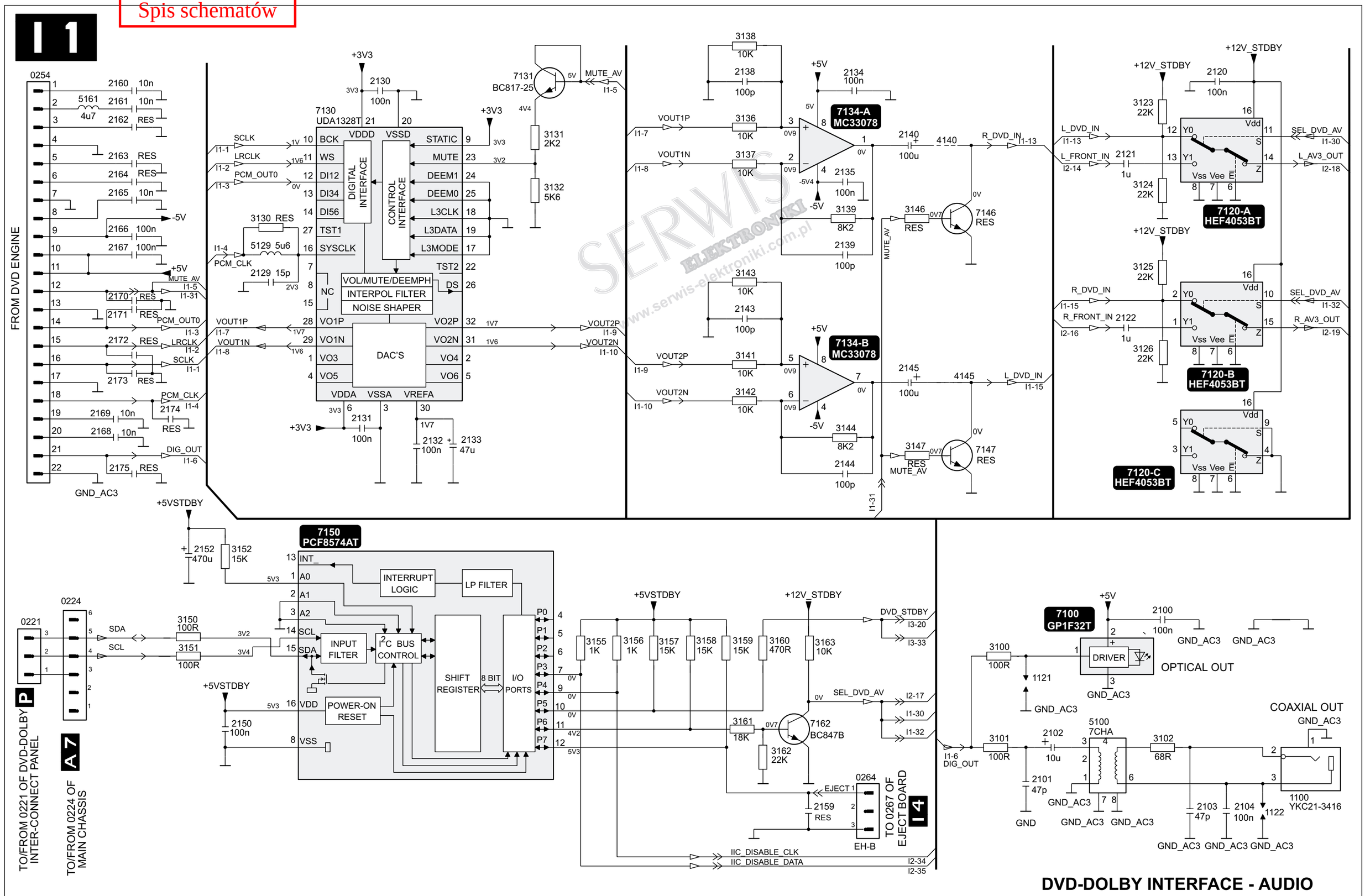

DVD-DOLBY INTERFACE - AUDIO

OTVC Philips chassis A10E-DVD AA

* DC VOLTAGE MEASURED IN DVD MODE WITHOUT DISK LOADED

Spis schematów

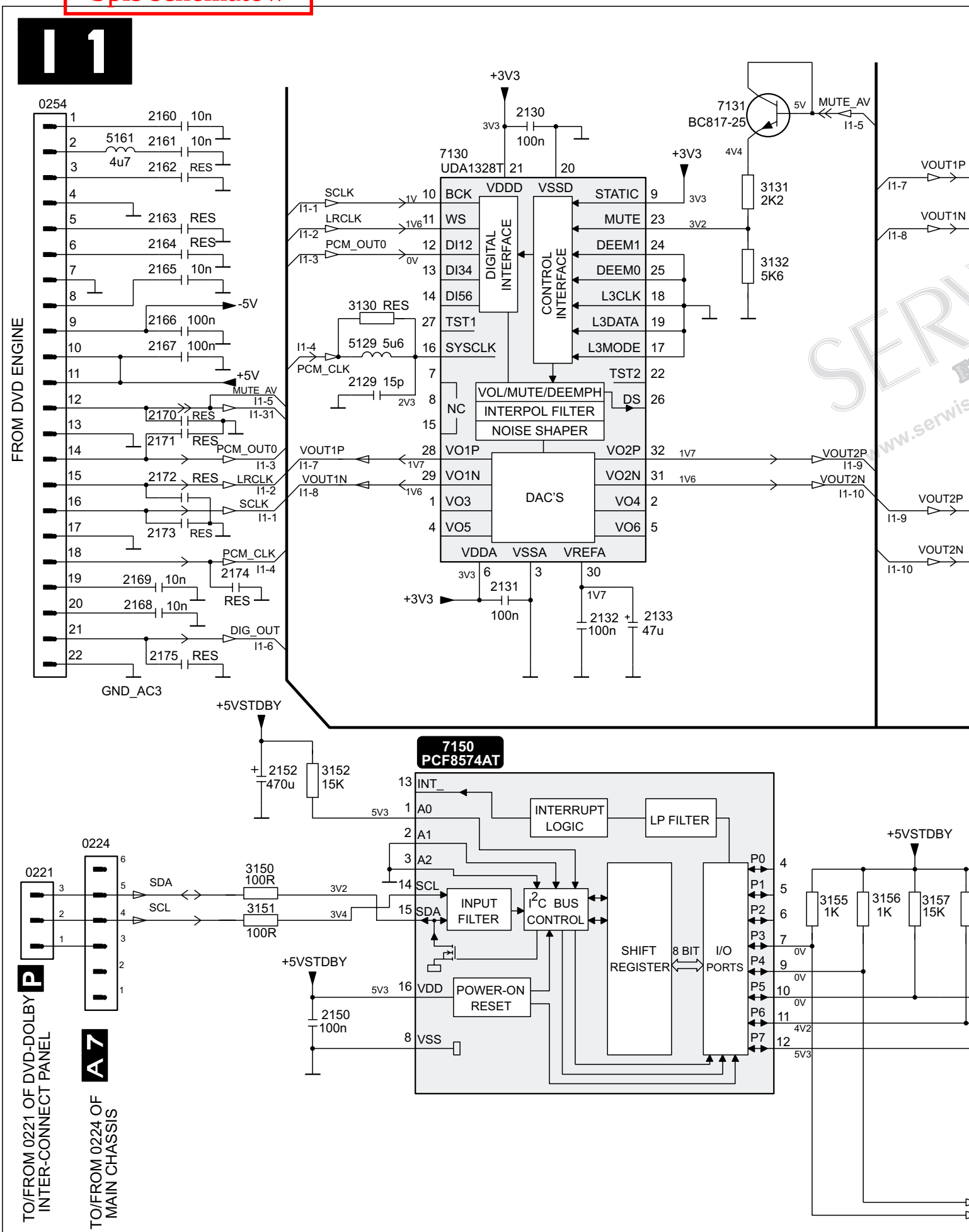

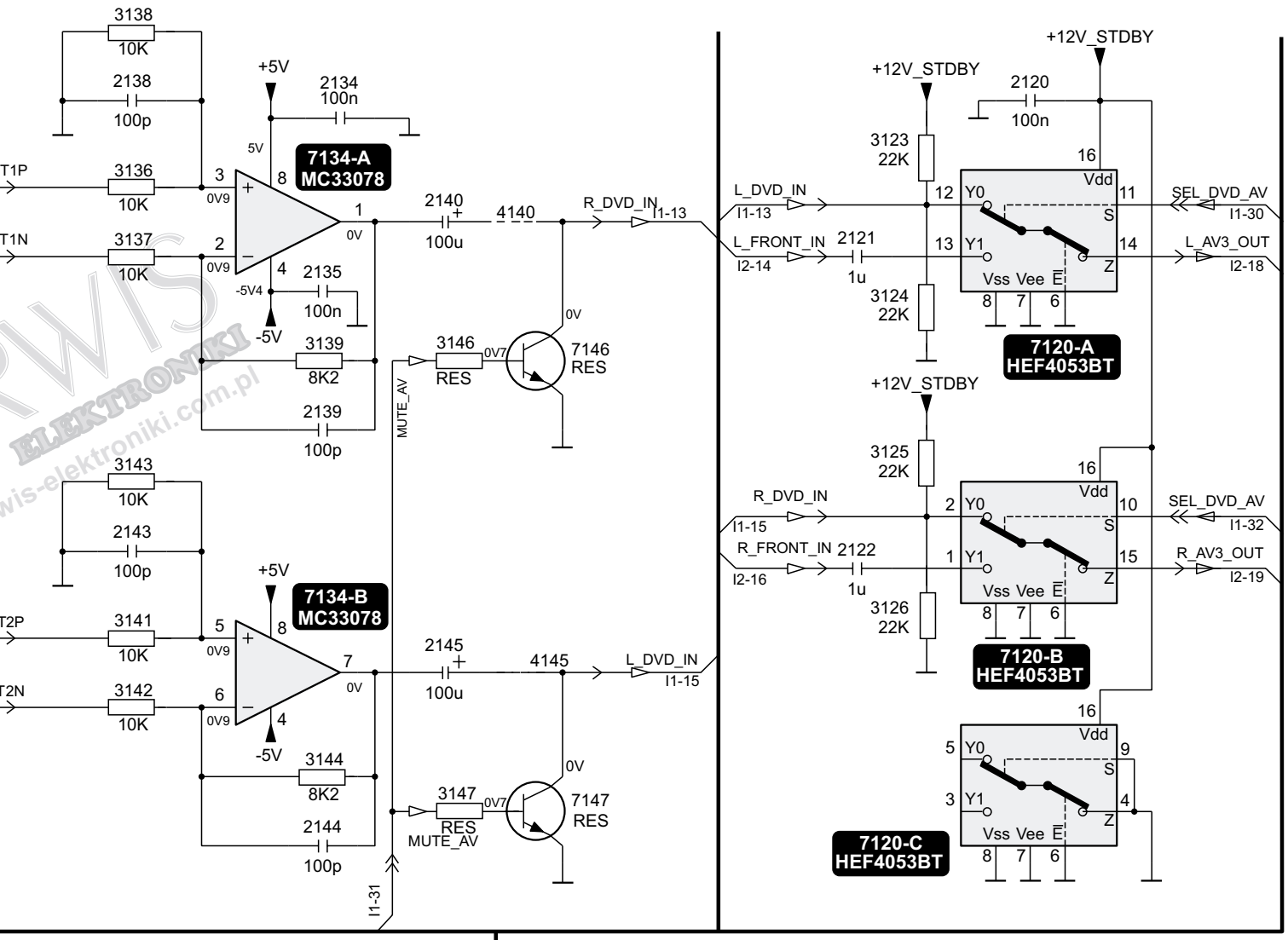

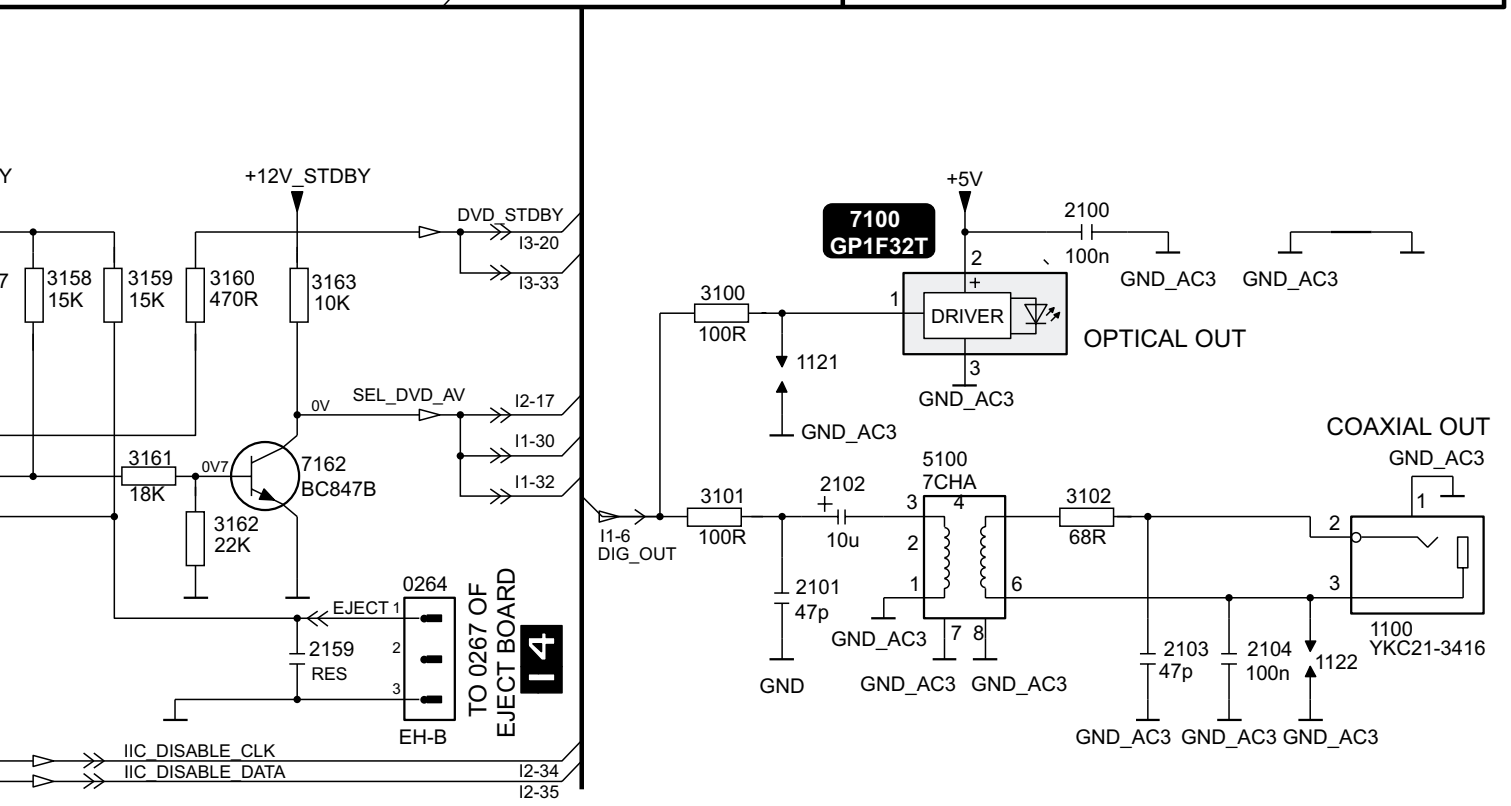

DVD-DOLBY INTERFACE - AUDIO

OTVC Philips chassis A10E-DVD AA

RWIS ELEKTRONIKI www.rwis-elektroniki.com.pl

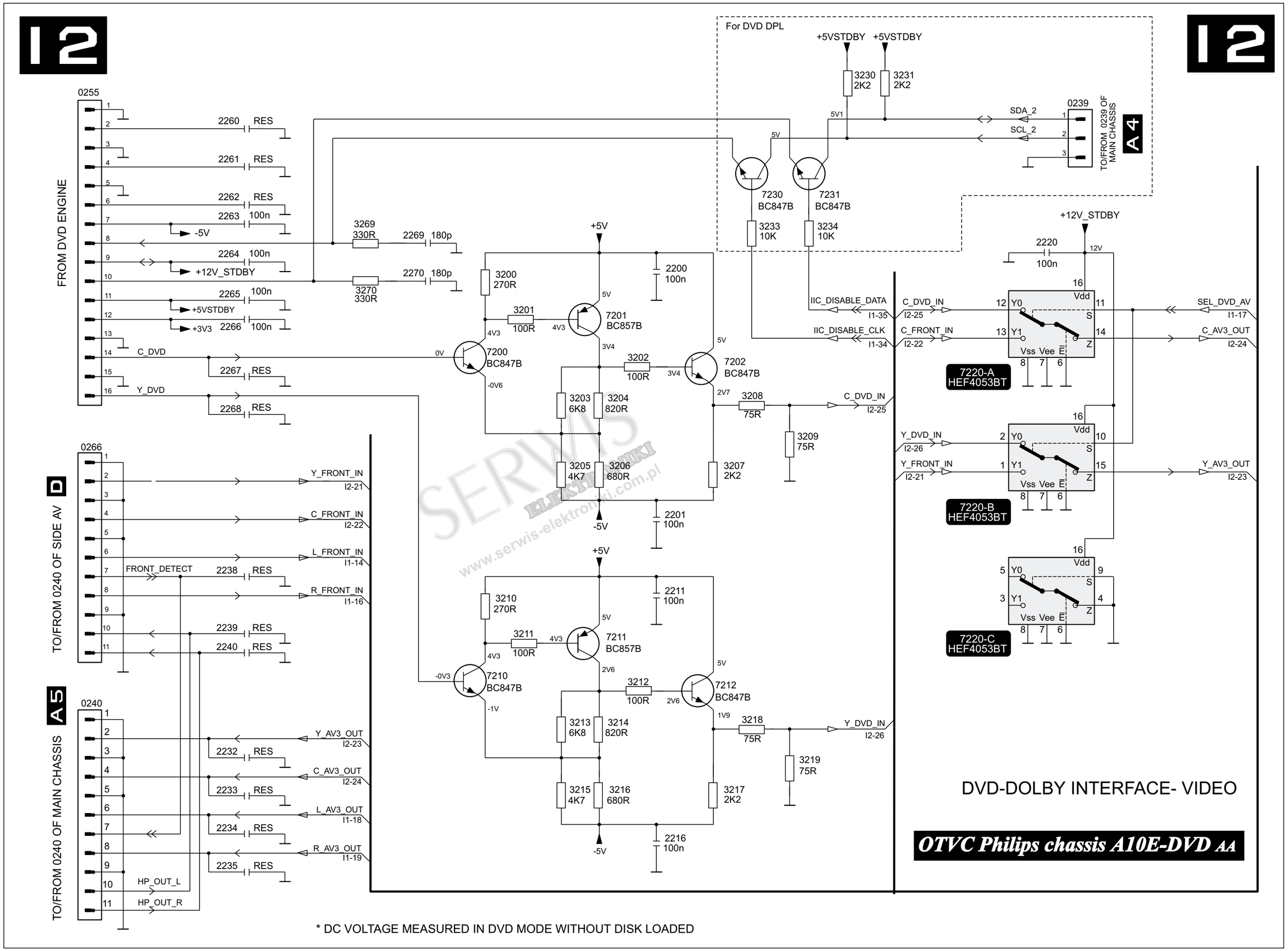
I2
I2
For DVD DPL
+5VSTDBY
+5VSTDBY
3230 2K2
3231 2K2
5V1
5V
SDA_2
SCL_2
0239
TO/FROM 0239 OF MAIN CHASSIS
A 4
7230 BC847B
7231 BC847B
3233 10K
3234 10K
0255
FROM DVD ENGINE
2260 RES
2261 RES
2262 RES
2263 100n
-5V
2264 100n
+12V_STDBY
2265 100n
+5VSTDBY
+3V3
2266 100n
C_DVD
2267 RES
Y_DVD
2268 RES
3269 330R
2269 180p
3270 330R
2270 180p
+5V
3200 270R
2200 100n
3201 100R
7201 BC857B
7200 BC847B
3202 100R
7202 BC847B
3203 6K8
3204 820R
3205 4K7
3206 680R
3207 2K2
2201 100n
-5V
3208 75R
3209 75R
+12V_STDBY
2220 100n
12V
IIC_DISABLE_DATA
I1-35
IIC_DISABLE_CLK
I1-34
C_DVD_IN
I2-25
C_FRONT_IN
I2-22
SEL_DVD_AV
I1-17
C_AV3_OUT
I2-24
7220-A HEF4053BT
Y_DVD_IN
I2-26
Y_FRONT_IN
I2-21
Y_AV3_OUT
I2-23
7220-B HEF4053BT
7220-C HEF4053BT
0266
D
TO/FROM 0240 OF SIDE AV
Y_FRONT_IN
I2-21
C_FRONT_IN
I2-22
L_FRONT_IN
I1-14
FRONT_DETECT
2238 RES
R_FRONT_IN
I1-16
2239 RES
2240 RES
0240
A 5
TO/FROM 0240 OF MAIN CHASSIS
Y_AV3_OUT
I2-23
2232 RES
C_AV3_OUT
I2-24
2233 RES
L_AV3_OUT
I1-18
2234 RES
R_AV3_OUT
I1-19
2235 RES
HP_OUT_L
HP_OUT_R
3210 270R
2211 100n
3211 100R
7211 BC857B
7210 BC847B
3212 100R
7212 BC847B
3213 6K8
3214 820R
3215 4K7
3216 680R
3217 2K2
2216 100n
-5V
3218 75R
3219 75R
DVD-DOLBY INTERFACE- VIDEO
OTVC Philips chassis A10E-DVD AA
* DC VOLTAGE MEASURED IN DVD MODE WITHOUT DISK LOADED

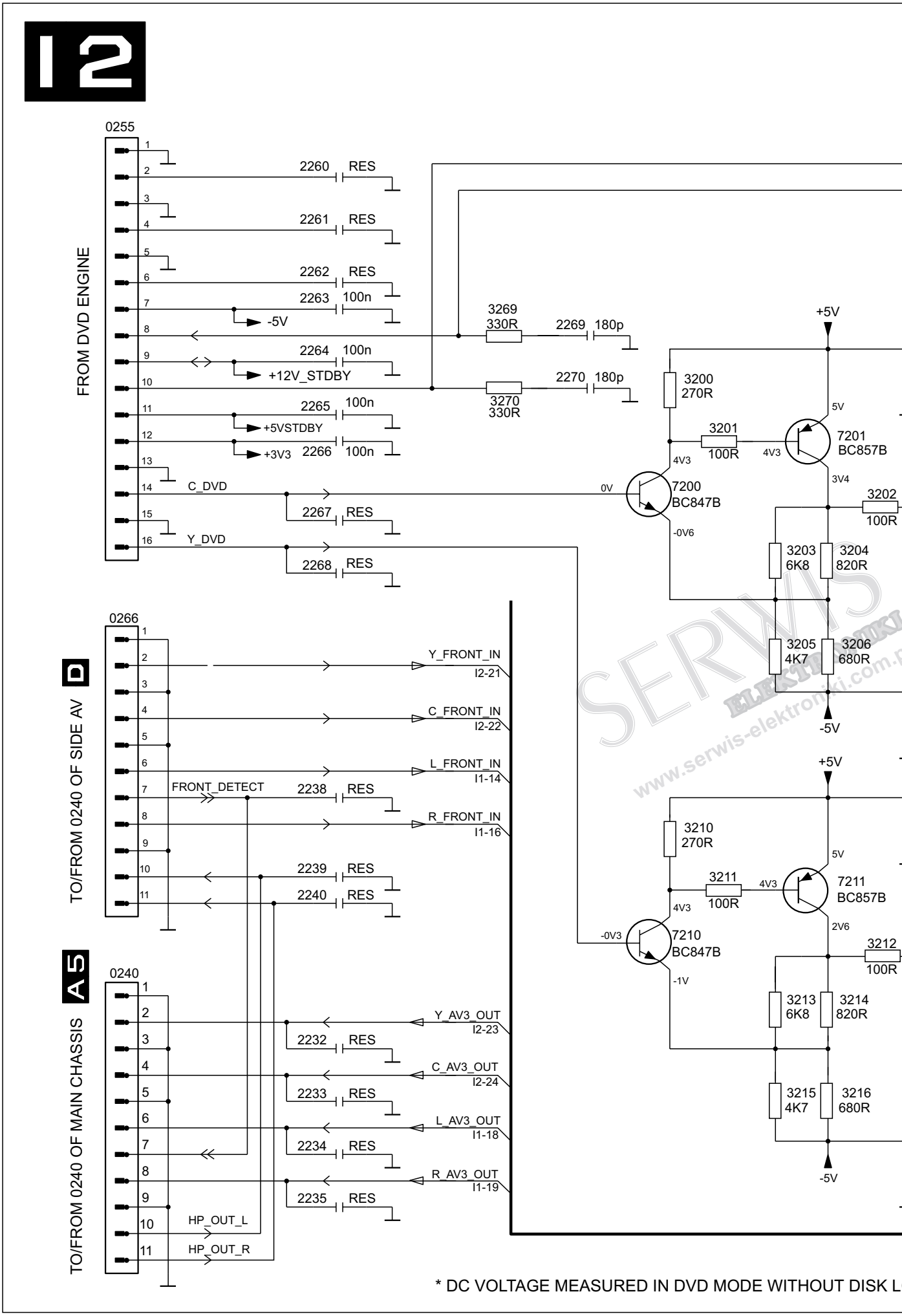

SERWIS ELEKTRONIKI www.serwis-elektroniki.com.p

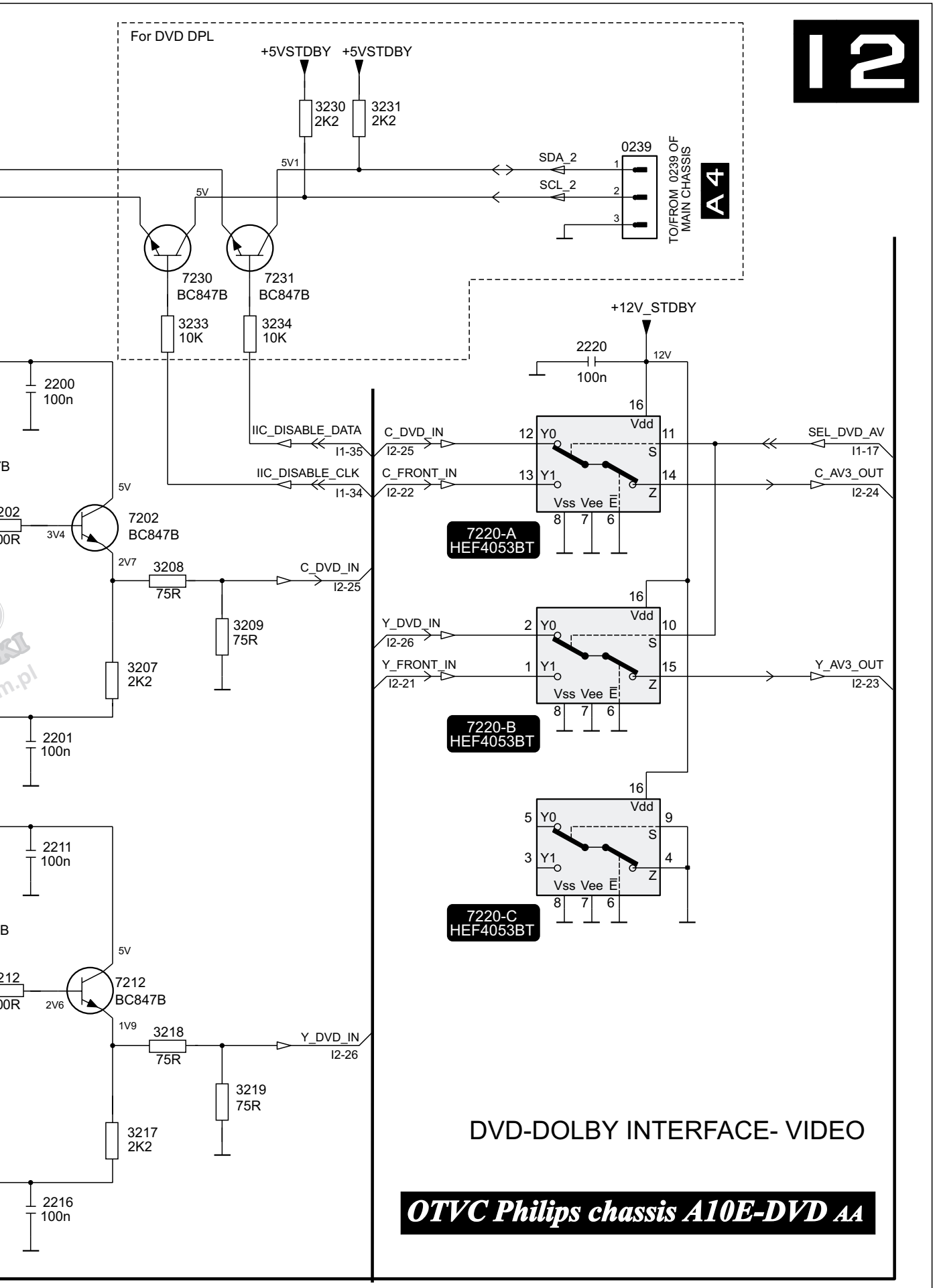
I2
For DVD DPL
+5VSTDBY
+5VSTDBY
3230
2K2
3231
2K2
5V1
5V
SDA_2
SCL_2
0239
TO/FROM 0239 OF MAIN CHASSIS
A4
7230
BC847B
7231
BC847B
3233
10K
3234
10K
+12V_STDBY
2220
100n
12V
2200
100n
IIC_DISABLE_DATA
I1-35
IIC_DISABLE_CLK
I1-34
C_DVD_IN
I2-25
C_FRONT_IN
I2-22
SEL_DVD_AV
I1-17
C_AV3_OUT
I2-24
7220-A
HEF4053BT
7202
BC847B
3V4
2V7
3208
75R
3209
75R
3207
2K2
2201
100n
Y_DVD_IN
I2-26
Y_FRONT_IN
I2-21
Y_AV3_OUT
I2-23
7220-B
HEF4053BT
7220-C
HEF4053BT
2211
100n
7212
BC847B
2V6
1V9
3218
75R
3219
75R
3217
2K2
2216
100n
DVD-DOLBY INTERFACE- VIDEO
OTVC Philips chassis A10E-DVD AA

K LOADED

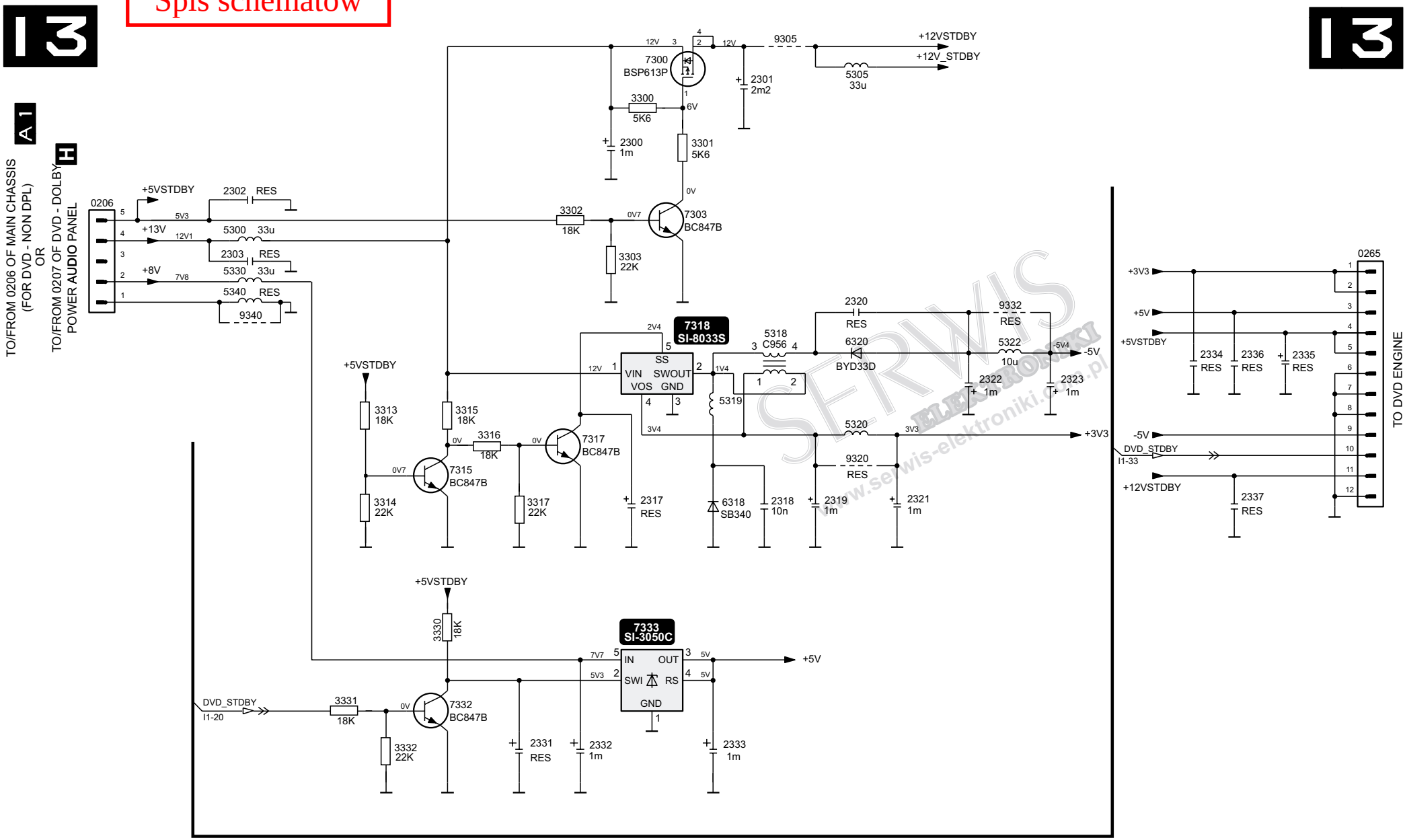

SERWIS ELEKTRONIKI www.serwis-elektroniki.com.pl

* DC VOLTAGE MEASURED IN DVD MODE WITHOUT DISK LOADED

DVD-DOLBY INTERFACE - POWER SUPPLY

OTVC Philips chassis A10E-DVD AA

Spis schematów

OTVC Philips chassis A10E-DVD AA

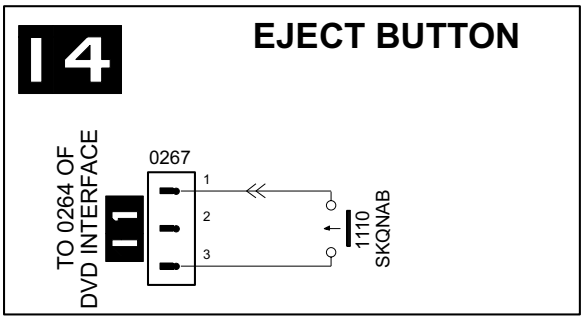

Diversity Table

Item	DVD with DPL	DVD w/o DPL	DESCRIPTION
0221	X		CON BM V 3P M 2.50 EH B
0239	X		CON BM V 3P M 2.50 EH B
3123	X		RST SM 0805 22K PM5 COL R
3124	X		RST SM 0805 22K PM5 COL R
3125	X		RST SM 0805 22K PM5 COL R
3126	X		RST SM 0805 22K PM5 COL R
3139	X		RST SM 0805 10K PM5 COL R
3139		X	RST SM 0805 8K2 PM5 COL R
3144	X		RST SM 0805 10K PM5 COL R
3144		X	RST SM 0805 8K2 PM5 COL R
3146		X	RST SM 0805 2K2 PM5 COL R
3147		X	RST SM 0805 2K2 PM5 COL R
3230	X		RST SM 0805 2K2 PM5 COL R
3231	X		RST SM 0805 2K2 PM5 COL R
3233	X		RST CRB 1/6W A 10K PM5 COL A
3234	X		RST CRB 1/6W A 10K PM5 COL A
7146		X	TRA SIG SM BC817-25 (COL) R
7147		X	TRA SIG SM BC817-25 (COL) R
7230	X		TRA SIG SM BC847B (COL) R
7231	X		TRA SIG SM BC847B (COL) R
9041	X		WIRE JUMPER
9043	X		WIRE JUMPER
9044	X		WIRE JUMPER
9046	X		WIRE JUMPER

Spis schematów

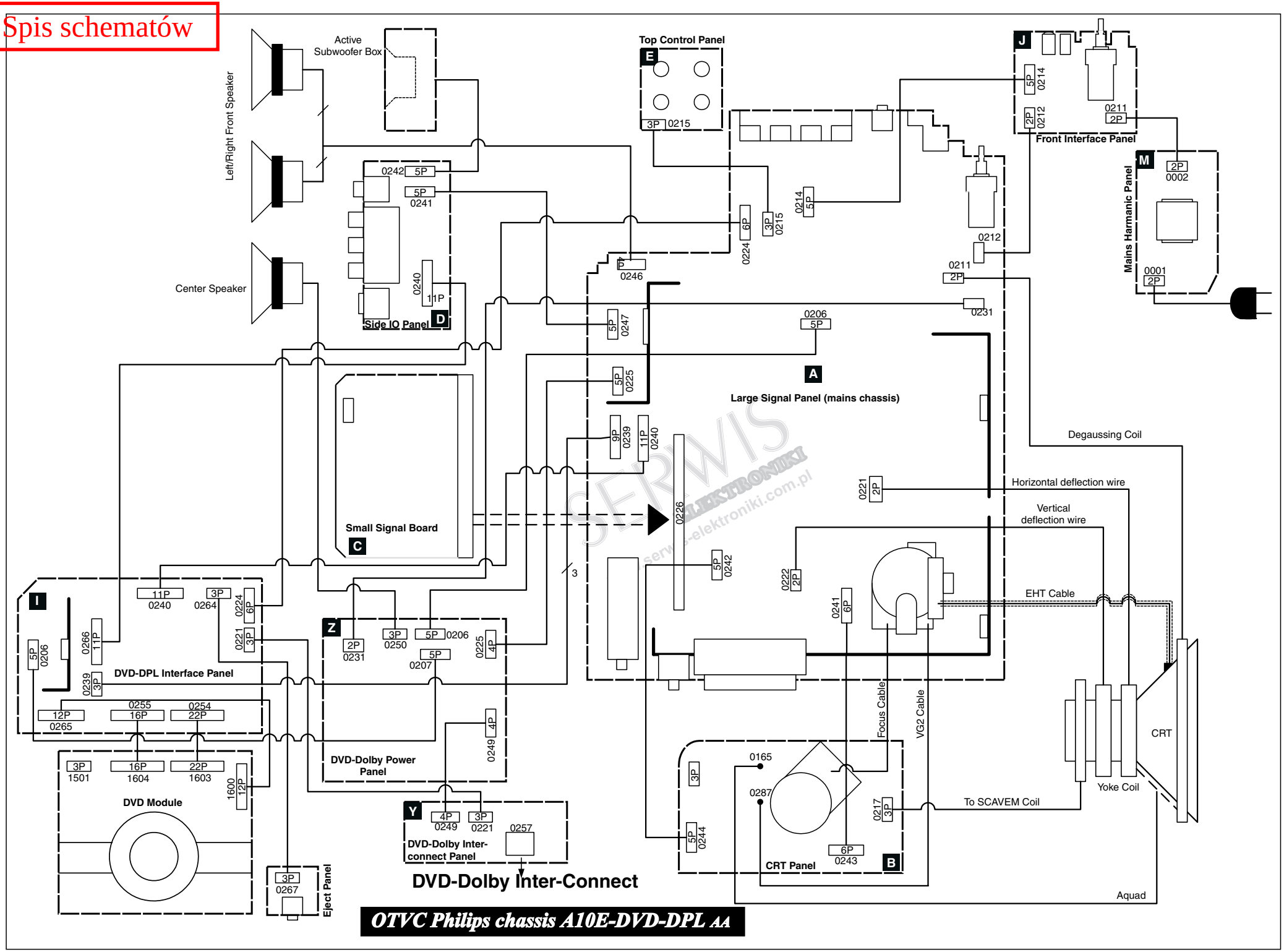

OTVC Philips chassis A10E-DVD-DPL AA

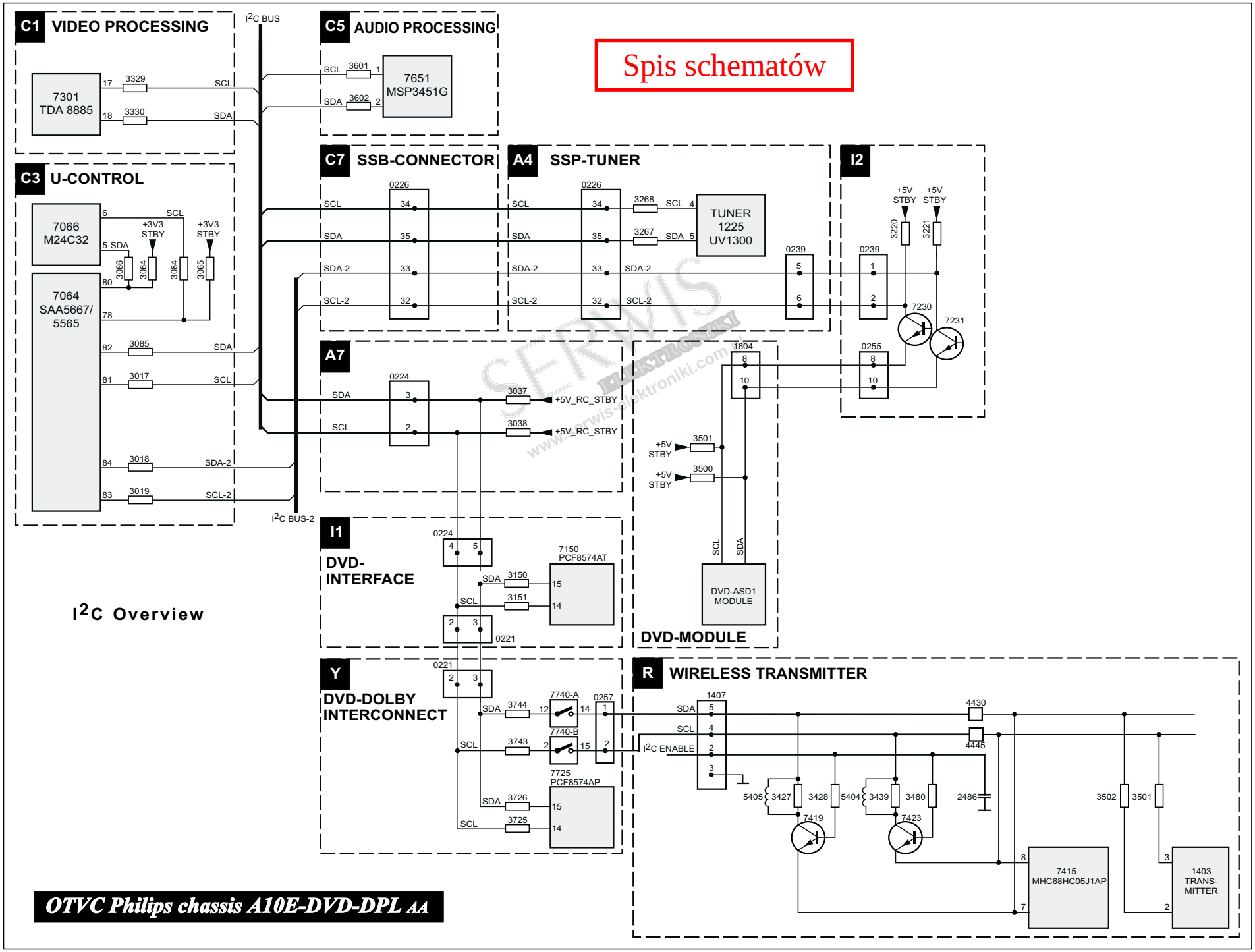
Spis schematów
C1 VIDEO PROCESSING
7301 TDA 8885
3329
3330
SCL
SDA
I2C BUS
C5 AUDIO PROCESSING
7651 MSP3451G
3601
3602
C3 U-CONTROL
7066 M24C32
7064 SAA5667/ 5565
+3V3 STBY
3086
3064
3084
3065
3085
3017
3018
3019
SDA-2
SCL-2
I2C BUS-2
C7 SSB-CONNECTOR
0226
A4 SSP-TUNER
3268
3267
TUNER 1225 UV1300
0239
I2
+5V STBY
3220
3221
7230
7231
0255
A7
0224
3037
3038
+5V_RC_STBY
1604
3501
3500
DVD-ASD1 MODULE
DVD-MODULE
I1
DVD-INTERFACE
7150 PCF8574AT
3150
3151
0221
I2C Overview
Y
DVD-DOLBY INTERCONNECT
7740-A
7740-B
0257
3744
3743
7725 PCF8574AP
3726
3725
R WIRELESS TRANSMITTER
1407
I2C ENABLE
4430
4445
5405
3427
3428
5404
3439
3480
2486
7419
7423
7415 MHC68HC05J1AP
3502
1403 TRANS-MITTER
OTVC Philips chassis A10E-DVD-DPL AA

Spis schematów

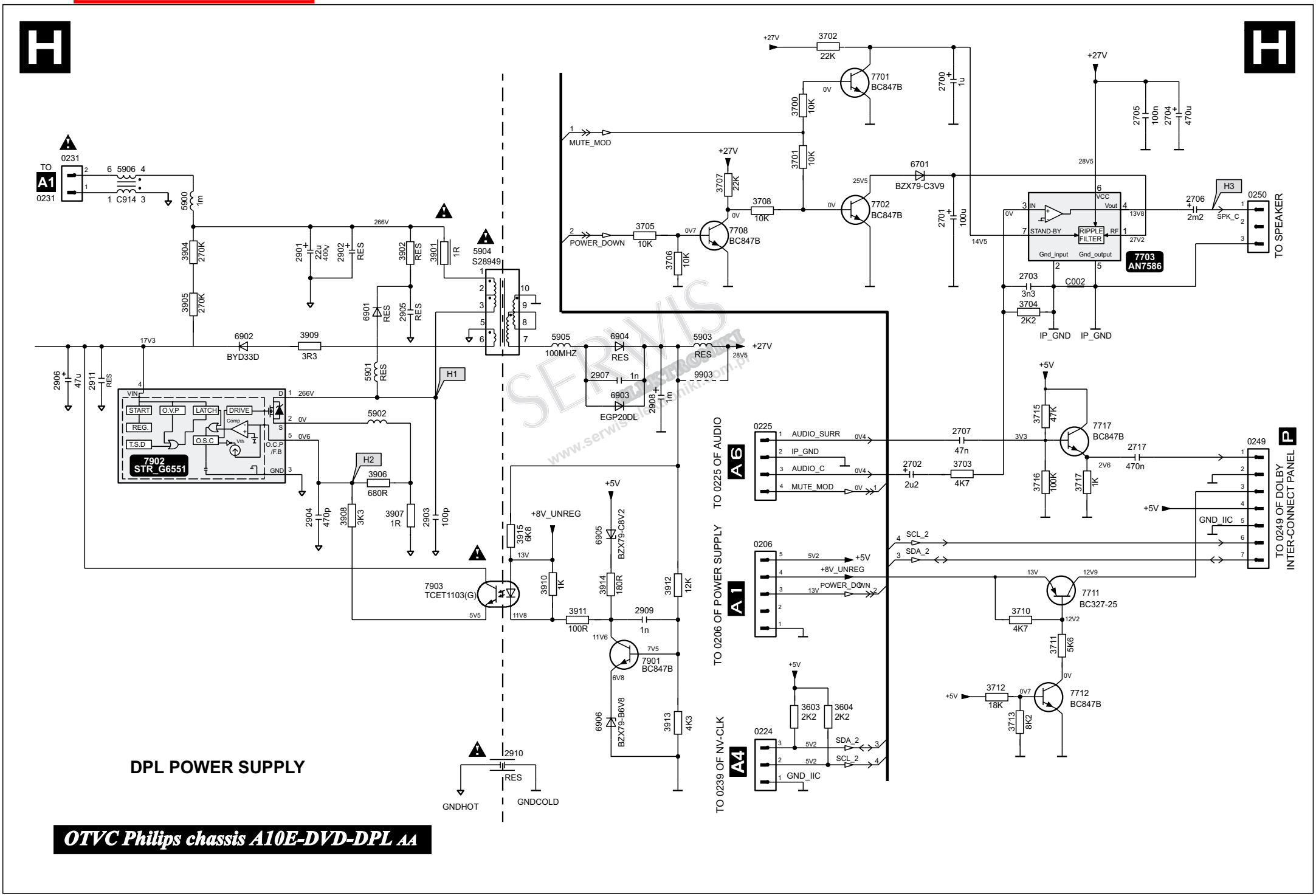

Y

OTVC Philips chassis A10E-DVD-DPL AA

Y

DVD-DOLBY INTER-CONNECT

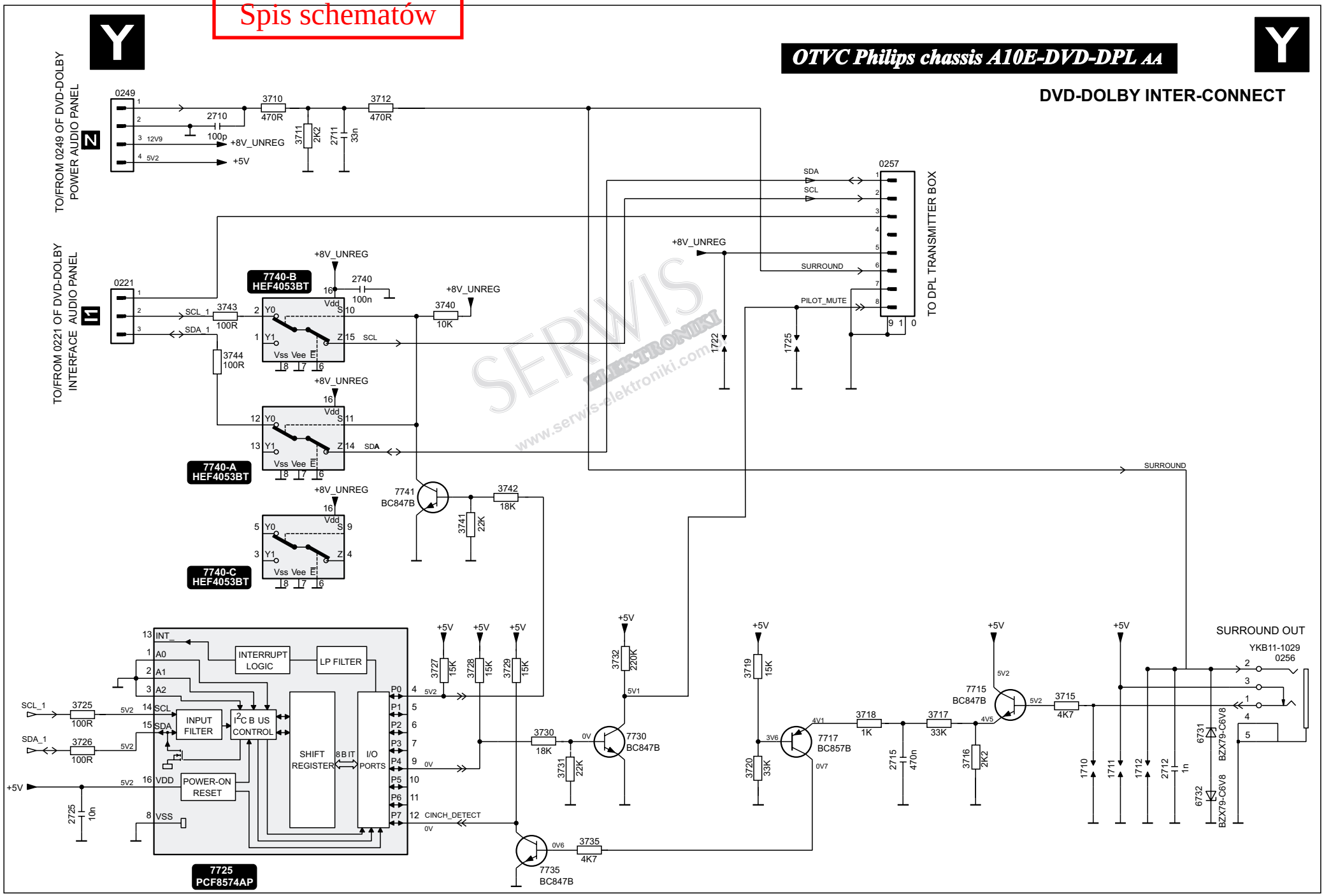

SERWIS ELEKTRONIKI www.serwis-elektroniki.com

Spis schematów

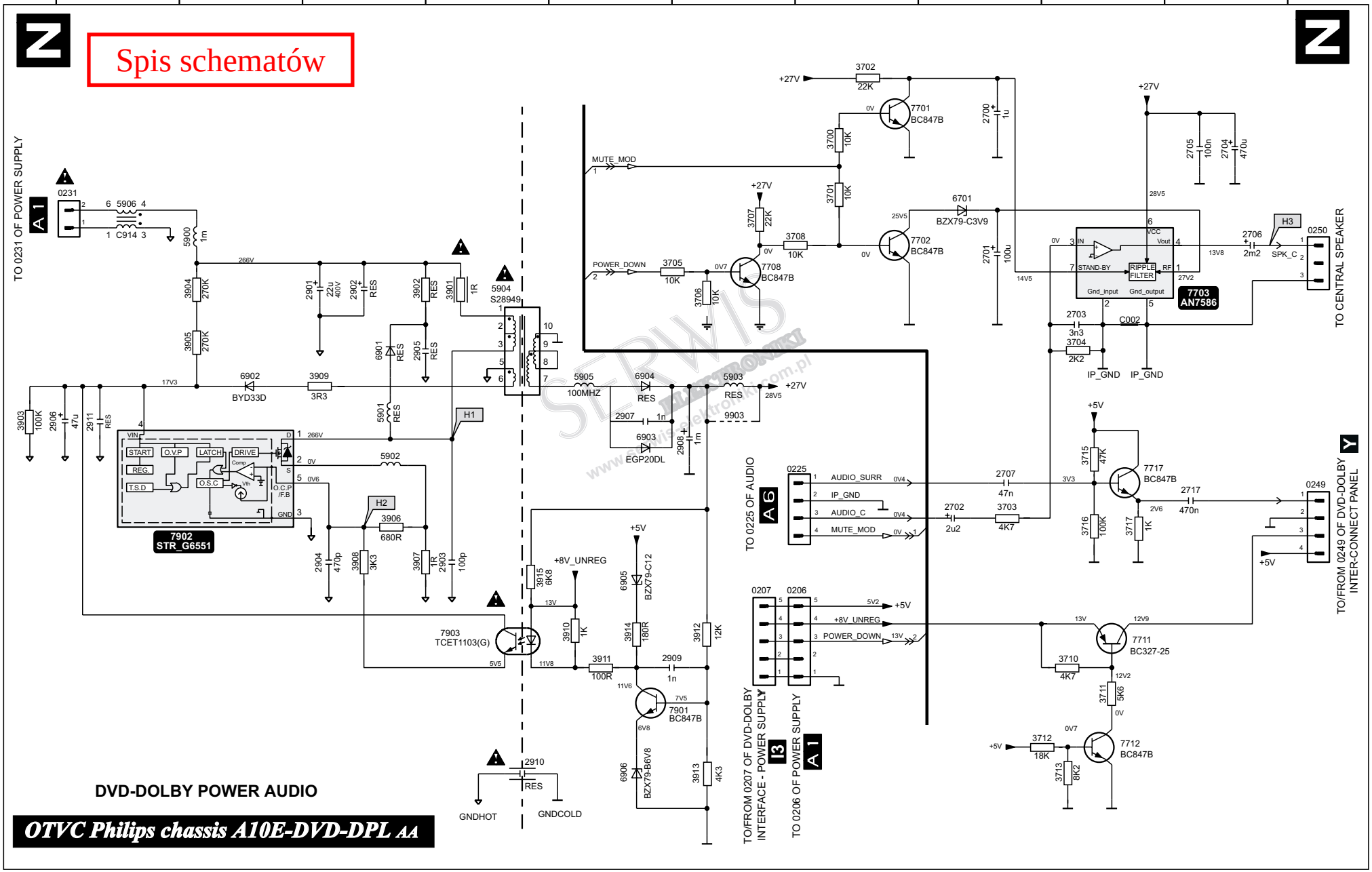

DVD-DOLBY POWER AUDIO

OTVC Philips chassis A10E-DVD-DPL AA