FTL3.1E

AA

Service
Service
Service

E_14700_000.eps
261004

Service Manual

Contents **Page**

1 Technical Specifications, Connections, and Chassis Overviews 2
2 Safety Instructions, Warnings, and Notes 5
3 Directions for Use 7
4 Mechanical Instructions 9
5 Service Modes, Error Codes, and Faultfinding 12
6 *Block Diagrams, Testpoint Overview, and Waveforms*
Wiring Diagram 32” Sharp LCD 29
Block Diagram Supply + Standby 32” 30
Block Diagram Video 31
Block Diagram Audio 32
I²C Overview 33
Supply Lines Overview 34
7 *Circuit Diagrams and PWB layouts* *Diagram* *PWB*
PSU (30-32”): M. Filter and Stby (Diagram A1) 35 37-40
PSU (30-32”): Supply (Diagram A2) 36 37-40
SSB: Layout Cell Overview (Diagram B0) 41 83-92
SSB: DC/DC (Diagram B2) 42 83-92
SSB: Tuner (Diagram B3) 43 83-92
SSB: MPIF/AVIP Main (Diagram B4) 44-50 83-92
SSB: MPIF/AVIP Sub (Diagram B5) 51-57 83-92
SSB: Viper (Diagram B6) 58-62 83-92
SSB: Stand-by Controller (Diagram B7) 63-65 83-92
SSB: Spider (Diagram B8) 66 83-92
SSB: Display Interface (Diagram B9) 67-72 83-92
SSB: Connections (Diagram B10) 73 83-92
SSB: I/O (Diagram B11) 74-79 83-92
SSB: Ethernet (Diagram B12) 80 83-92
SSB: LVDS Connector (Diagram B13) 81 83-92
SRP (Service Reference Protocol) Explanation 81
Small Signal Board: SRP (Signal References) 82
External I/O 1 (Diagram BE1) 93 95
External I/O 2 (Diagram BE1) 94 95

Contents **Page**

Side I/O Panel (Diagram D) 96 97
Top Control Panel (Diagram E) 98 99
LED and Switch Panel (Diagram J) 100 101
LCD SA Panel: Connections (Diagram SA1) 102 105-107
LCD SA Panel: Standby (Diagram SA2) 103 105-107
LCD SA Panel: Audio (Diagram SA3) 104 105-107
8 Alignments 109
9 Circuit Descriptions 112
List of Abbreviations 123
IC Data Sheets 125
10 Spare Parts List 134
11 Revision List 144

©Copyright 2004 Philips Consumer Electronics B.V. Eindhoven, The Netherlands.
All rights reserved. No part of this publication may be reproduced, stored in a retrieval system or transmitted, in any form or by any means, electronic, mechanical, photocopying, or otherwise without the prior permission of Philips.

Published by WO 0471 Service PaCE Printed in the Netherlands Subject to modification EN 3122 785 14700

PHILIPS

1. Technical Specifications, Connection, and Chassis Overview

Index of this chapter:

1.1 Technical Specifications
1.2 Connection Overview
1.3 Chassis Overview

Note: Figures below can deviate slightly from the actual situation, due to the different set executions.

1.1 Technical Specifications

1.1.1 Vision

Display type	:	LCD-VA, WXGA
Screen size	:	32" (82 cm), 16:9
Resolution (HxV pixels)	:	1366(*3)x768p
Contrast ratio	:	800:1
Light output (cd/m^2)	:	450
Response time (ms)	:	12
Viewing angle (HxV degrees)	:	170x170
Tuning system	:	PLL
TV Colour systems	:	PAL B/G, D/K, I
	:	SECAM B/G, D/K, L/L'
Video playback	:	PAL
	:	SECAM
Supported formats	:	VGA(640x480,60Hz)
	:	640x480i - 1fH
	:	640x480p - 2fH
	:	720x576i - 1fH
	:	720x576p - 2fH
Channel selections	:	100 presets
	:	VHF
	:	UHF
	:	S-band
	:	Hyper-band
Aerial input	:	75 ohm, Coax
	:	IEC-type

1.1.2 Sound

Sound systems	:	2CS B/G, D/K
	:	NICAM B/G, D/K, I, L
Maximum power (W_{RMS})	:	2 x 15

1.1.3 Multimedia

Supported digital media	:	Compact Flash I & II
	:	Memory Stick
	:	Microdrive
	:	Secure Digital Card
	:	Multi Media Card
	:	Smart Media Card
Supported file formats	:	JPEG
	:	MP3
USB input	:	USB1.1

1.1.4 Miscellaneous

Power supply:		
- Mains voltage (V_{AC})	:	220 - 240
- Mains frequency (Hz)	:	50
Ambient conditions:		
- Temperature range (°C)	:	+5 to +40
- Maximum humidity	:	90% R.H.

Power consumption

- Normal operation (W)	:	≈ 185
- Standby (W)	:	< 2
Dimensions (WxHxD in cm)	:	87.5x61x10.7
Weight (kg)	:	20

1.2 Connection Overview

Note: The following connector colour abbreviations are used (acc. to DIN/IEC 757): Bk= Black, Bu= Blue, Gn= Green, Gy= Grey, Rd= Red, Wh= White, and Ye= Yellow.

1.2.1 Side Connections

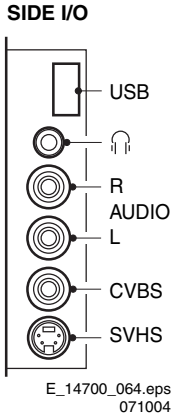

Figure 1-1 Side I/O connections

USB1.1 (Input/Output)

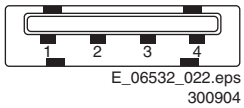

Figure 1-2 USB (type A)

1	- +5V	
2	- Data (-)	
3	- Data (+)	
4	- Ground	Gnd

Mini Jack: Audio Headphone - Out

Bk	- Headphone	32 - 600 ohm / 10 mW

Cinch: Video CVBS - In, Audio - In

Ye	- Video CVBS	1 V_{PP} / 75 ohm
Wh	- Audio L	0.5 V_{RMS} / 10 kohm
Rd	- Audio R	0.5 V_{RMS} / 10 kohm

SVHS (Hosiden): Video Y/C - In

1	- Ground Y	Gnd
2	- Ground C	Gnd
3	- Video Y	1 V_{PP} / 75 ohm
4	- Video C	0.3 V_{PP} / 75 ohm

Digital Media Reader (Input)

This is a 6 in 1 card reader unit, connected via USB to the Small Signal Board.

1.2.2 Rear Connections

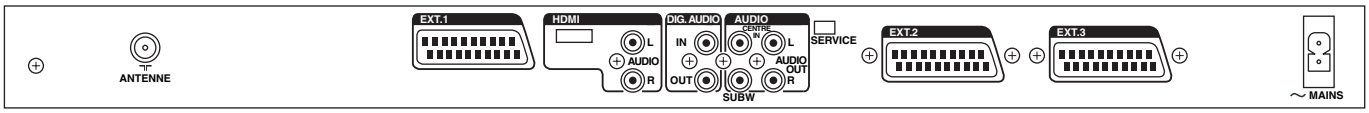

E_14700_056.eps
121104

Figure 1-3 Rear I/O

Aerial - In

-	- IEC-type (EU)	Coax, 75 ohm	⊤

Ext. 1: Video RGB/YPbPr - In, CVBS - In/Out, Audio - In/Out

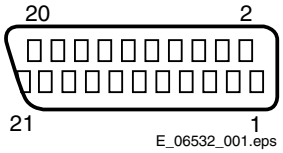

E_06532_001.eps
050404

Figure 1-4 SCART connector

1	- Audio R	0.5 V_{RMS} / 1 kohm	⊖→
2	- Audio R	0.5 V_{RMS} / 10 kohm	⊖→
3	- Audio L	0.5 V_{RMS} / 1 kohm	⊖→
4	- Ground Audio	Gnd	⏚
5	- Ground Blue	Gnd	⏚
6	- Audio L	0.5 V_{RMS} / 10 kohm	⊖→
7	- Video Blue/Pb	0.7 V_{PP} / 75 ohm	⊖→
8	- Status	0 - 2 V: INT 4.5 - 7 V: EXT 16:9 9.5 - 12 V: EXT 4:3	⊖→
9	- Ground Green	Gnd	⏚
10	- n.c.		
11	- Video Green/Y	0.7 or 1 V_{PP} / 75 ohm	⊖→
12	- n.c.		
13	- Ground Red	Gnd	⏚
14	- Ground Status	Gnd	⏚
15	- Video Red/Pr	0.7 V_{PP} / 75 ohm	⊖→
16	- FBL/Hsync	0 - 0.4 V: INT 1 - 3 V: EXT / 75 ohm	⊖→
17	- Ground Video	Gnd	⏚
18	- Ground FBL	Gnd	⏚
19	- Video CVBS	1 V_{PP} / 75 ohm	⊖→
20	- Video CVBS	1 V_{PP} / 75 ohm	⊖→
21	- Shield	Gnd	⏚

HDMI: Digital Video, Digital Audio - In

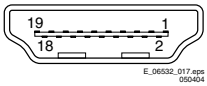

E_06532_017.eps
050404

Figure 1-5 HDMI (type A) connector

1	- D2+	Data channel	⊖→
2	- Shield	Gnd	⏚
3	- D2-	Data channel	⊖→
4	- D1+	Data channel	⊖→
5	- Shield	Gnd	⏚
6	- D1-	Data channel	⊖→
7	- D0+	Data channel	⊖→
8	- Shield	Gnd	⏚
9	- D0-	Data channel	⊖→
10	- CLK+	Data channel	⊖→
11	- Shield	Gnd	⏚
12	- CLK-	Data channel	⊖→
13	- n.c.		
14	- n.c.		
15	- DDC_SCL	DDC clock	⊖→
16	- DDC_SDA	DDC data	⊖⊖→
17	- Ground	Gnd	⏚
18	- +5V		⊖→
19	- HPD		
20	- Ground	Gnd	⏚

Cinch: HDMI Audio - In

Rd	- Audio - R	0.5 V_{RMS} / 10 kohm	⊖◎
Wh	- Audio - L	0.5 V_{RMS} / 10 kohm	⊖◎

Cinch: Audio - Out

Rd	- Audio - R	0.5 V_{RMS} / 10 kohm	⊖→◎
Wh	- Audio - L	0.5 V_{RMS} / 10 kohm	⊖→◎

Cinch: Subwoofer - Out, Centre - In

Bu	- Center	0.5 V_{RMS} / 10 kohm	⊖◎
Bk	- Subwoofer	0.5 V_{RMS} / 10 kohm	⊖→◎

Service connector (UART)

1	- UART_TX		⊖→
2	- Ground	Gnd	⏚
3	- UART_RX		⊖→

Ext. 2: Video RGB/YPbPr - In, CVBS - In/Out, Audio - In/Out

1	- Audio R	0.5 V_{RMS} / 1 kohm	⊖→
2	- Audio R	0.5 V_{RMS} / 10 kohm	⊖→
3	- Audio L	0.5 V_{RMS} / 1 kohm	⊖→
4	- Ground Audio	Gnd	⏚
5	- Ground Blue	Gnd	⏚
6	- Audio L	0.5 V_{RMS} / 10 kohm	⊖→
7	- Video Blue/Pb	0.7 V_{PP} / 75 ohm	⊖→
8	- Status	0 - 2 V: INT 4.5 - 7 V: EXT 16:9 9.5 - 12 V: EXT 4:3	⊖→
9	- Ground Green	Gnd	⏚
10	- Easylink P50	0 - 5 V / 4.7 kohm	⊖⊖→
11	- Video Green/Y	0.7 or 1 V_{PP} / 75 ohm	⊖→
12	- n.c.		
13	- Ground Red	Gnd	⏚
14	- Ground Status	Gnd	⏚
15	- Video Red/Pr	0.7 V_{PP} / 75 ohm	⊖→
16	- FBL/Hsync	0 - 0.4 V: INT 1 - 3 V: EXT / 75 ohm	⊖→
17	- Ground Video	Gnd	⏚
18	- Ground FBL	Gnd	⏚
19	- Video CVBS	1 V_{PP} / 75 ohm	⊖→
20	- Video Y/CVBS	1 V_{PP} / 75 ohm	⊖→
21	- Shield	Gnd	⏚

Ext. 3: Video RGB/YPbPr - In, CVBS - In/Out, Audio - In/Out

1	- n.c.		
2	- Audio R	0.5 V_{RMS} / 10 kohm	⊕
3	- n.c.		
4	- Ground Audio	Gnd	⏚
5	- Ground Blue	Gnd	⏚
6	- Audio L	0.5 V_{RMS} / 10 kohm	⊕
7	- Video Blue/Pb	0.7 V_{PP} / 75 ohm	⊕
8	- Status	0 - 2 V: INT	
		4.5 - 7 V: EXT 16:9	
		9.5 - 12 V: EXT 4:3	⊕
9	- Ground Green	Gnd	⏚
10	- n.c.		
11	- Video Green/Y	0.7 V_{PP} / 75 ohm	⊕
12	- n.c.		
13	- Ground Red	Gnd	⏚
14	- Ground Status	Gnd	⏚
15	- Video Red/Pr	0.7 V_{PP} / 75 ohm	⊕
16	- FBL/Hsync	0 - 0.4 V: INT	
		1 - 3 V: EXT / 75 ohm	⊕
17	- Ground Video	Gnd	⏚
18	- Ground FBL	Gnd	⏚
19	- Video CVBS	1 V_{PP} / 75 ohm	⊖
20	- Video CVBS	1 V_{PP} / 75 ohm	⊕
21	- Shield	Gnd	⏚

1.3 Chassis Overview

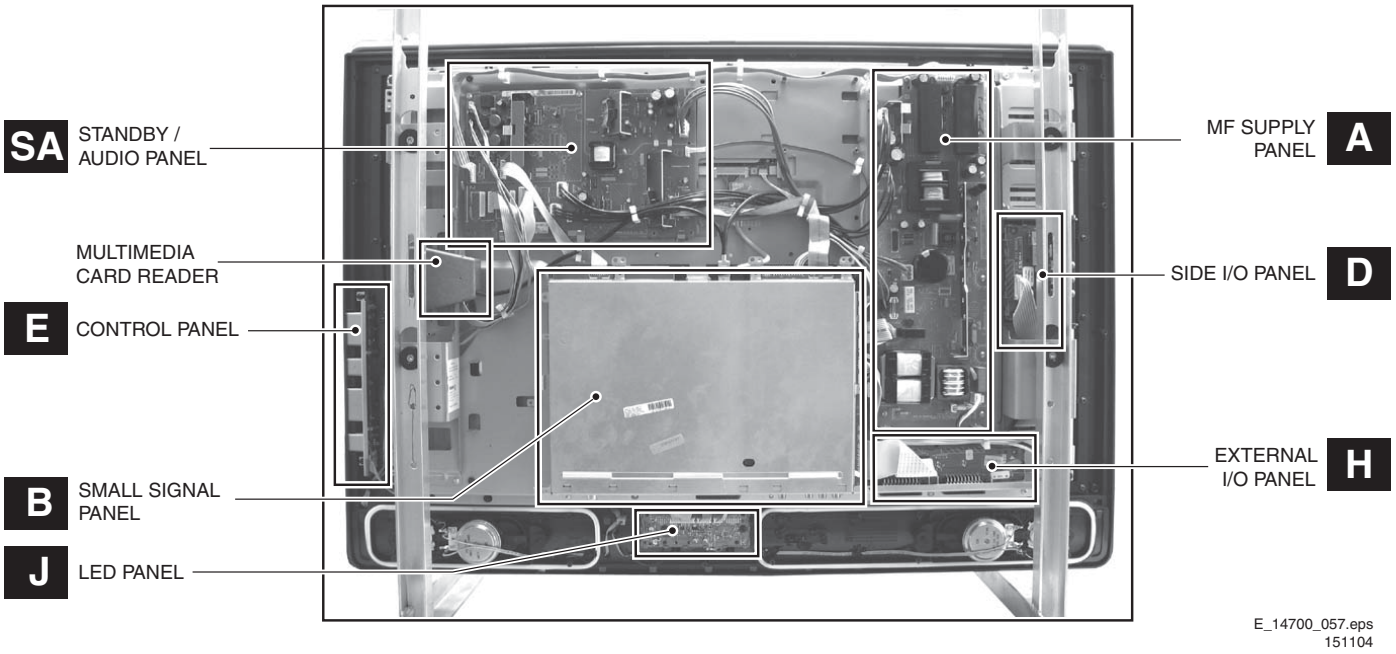

Figure 1-6 PWB locations

2. Safety Instructions, Warnings, and Notes

2.1 Safety Instructions

Safety regulations require that **during** a repair:
- Connect the set to the Mains (AC Power) via an isolation transformer (> 800 VA).
- Replace safety components, indicated by the symbol ⚠, only by components identical to the original ones. Any other component substitution (other than original type) may increase risk of fire or electrical shock hazard.

Safety regulations require that **after** a repair, the set must be returned in its original condition. Pay in particular attention to the following points:
- Route the wire trees correctly and fix them with the mounted cable clamps.
- Check the insulation of the Mains (AC Power) lead for external damage.
- Check the strain relief of the Mains (AC Power) cord for proper function.
- Check the electrical DC resistance between the Mains (AC Power) plug and the secondary side (only for sets which have a Mains (AC Power) isolated power supply):
  1. Unplug the Mains (AC Power) cord and connect a wire between the two pins of the Mains (AC Power) plug.
  2. Set the Mains (AC Power) switch to the "on" position (keep the Mains (AC Power) cord unplugged!).
  3. Measure the resistance value between the pins of the Mains (AC Power) plug and the metal shielding of the tuner or the aerial connection on the set. The reading should be between 4.5 Mohm and 12 Mohm.
  4. Switch "off" the set, and remove the wire between the two pins of the Mains (AC Power) plug.
- Check the cabinet for defects, to avoid touching of any inner parts by the customer.

2.2 Warnings

- All ICs and many other semiconductors are susceptible to electrostatic discharges (ESD ⚠). Careless handling during repair can reduce life drastically. Make sure that, during repair, you are connected with the same potential as the mass of the set by a wristband with resistance. Keep components and tools also at this same potential.
  Available ESD protection equipment:
  – Complete kit ESD3 (small tablemat, wristband, connection box, extension cable and earth cable) 4822 310 10671.
  – Wristband tester 4822 344 13999.
- Be careful during measurements in the high voltage section.
- Never replace modules or other components while the unit is switched "on".
- When you align the set, use plastic rather than metal tools. This will prevent any short circuits and the danger of a circuit becoming unstable.

2.3 Notes

2.3.1 General

- Measure the voltages and waveforms with regard to the chassis (= tuner) ground (⏚), or hot ground (⏚), depending on the tested area of circuitry. The voltages and waveforms shown in the diagrams are indicative. Measure them in the Service Default Mode (see chapter 5) with a colour bar signal and stereo sound (L: 3 kHz, R: 1 kHz unless stated otherwise) and picture carrier at 475.25 MHz for PAL, or 61.25 MHz for NTSC (channel 3).

aligned under a microscope or magnifying glass. If this is not

- Where necessary, measure the waveforms and voltages with (⊓) and without (⊼) aerial signal. Measure the voltages in the power supply section both in normal operation (⏻) and in standby (⏻). These values are indicated by means of the appropriate symbols.
- The semiconductors indicated in the circuit diagram and in the parts lists, are interchangeable per position with the semiconductors in the unit, irrespective of the type indication on these semiconductors.
- Manufactured under license from Dolby Laboratories. “Dolby”, “Pro Logic” and the “double-D symbol”, are trademarks of Dolby Laboratories.

2.3.2 Schematic Notes

- All resistor values are in ohms and the value multiplier is often used to indicate the decimal point location (e.g. 2K2 indicates 2.2 kohm).
- Resistor values with no multiplier may be indicated with either an "E" or an "R" (e.g. 220E or 220R indicates 220 ohm).
- All capacitor values are given in micro-farads (μ= x10^{-6}), nano-farads (n= x10^{-9}), or pico-farads (p= x10^{-12}).
- Capacitor values may also use the value multiplier as the decimal point indication (e.g. 2p2 indicates 2.2 pF).
- An "asterisk" (*) indicates component usage varies. Refer to the diversity tables for the correct values.
- The correct component values are listed in the Spare Parts List. Therefore, always check this list when there is any doubt.

2.3.3 Rework on BGA (Ball Grid Array) ICs

General
Although (LF)BGA assembly yields are very high, there may still be a requirement for component rework. By rework, we mean the process of removing the component from the PWB and replacing it with a new component. If an (LF)BGA is removed from a PWB, the solder balls of the component are deformed drastically so the removed (LF)BGA has to be discarded.

Device Removal
As is the case with any component that, it is essential when removing an (LF)BGA, the board, tracks, solder lands, or surrounding components are not damaged. To remove an (LF)BGA, the board must be uniformly heated to a temperature close to the reflow soldering temperature. A uniform temperature reduces the chance of warping the PWB.
To do this, we recommend that the board is heated until it is certain that all the joints are molten. Then carefully pull the component off the board with a vacuum nozzle. For the appropriate temperature profiles, see the IC data sheet.

Area Preparation
When the component has been removed, the vacant IC area must be cleaned before replacing the (LF)BGA.
Removing an IC often leaves varying amounts of solder on the mounting lands. This excessive solder can be removed with either a solder sucker or solder wick. The remaining flux can be removed with a brush and cleaning agent.
After the board is properly cleaned and inspected, apply flux on the solder lands and on the connection balls of the (LF)BGA.
Note: Do not apply solder paste, as this has shown to result in problems during re-soldering.

Device Replacement
The last step in the repair process is to solder the new component on the board. Ideally, the (LF)BGA should be possible, try to align the (LF)BGA with any board markers.

To reflow the solder, apply a temperature profile according to the *IC data sheet*. So as not to damage neighbouring components, it may be necessary to reduce some temperatures and times.

More Information
For more information on how to handle BGA devices, visit this URL: *www.atyourservice.ce.philips.com* (needs subscription, not available for all regions)). After login, select “Magazine”, then go to “Workshop Information”. Here you will find Information on how to deal with BGA-ICs.

2.3.4 Lead Free Solder

Philips CE is going to produce lead-free sets (PBF) from 1.1.2005 onwards.
Lead-free sets will be indicated by the PHILIPS-lead-free logo on the Printed Wiring Boards (PWB):

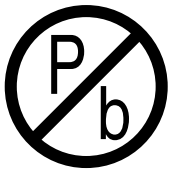

Figure 2-1 Lead-free logo

This sign normally has a diameter of 6 mm, but if there is less space on a board also 3 mm is possible.

In case of doubt wether the board is lead-free or not (or with mixed technologies), you can use the following method:
- Always use the highest temperature to solder, when using SAC305 (see also instructions below).
- De-solder thoroughly (clean solder joints to avoid mix of two alloys).

Caution: For BGA-ICs, you **must** use the correct temperature-profile, which is coupled to the 12NC. For an overview of these profiles, visit the website *www.atyourservice.ce.philips.com* (needs subscription, but is not available for all regions)
You will find this and more technical information within the "Magazine", chapter "Workshop information".
For additional questions please contact your local repair-helpdesk.

Due to lead-free technology some rules have to be respected by the workshop during a repair:
- Use only lead-free soldering tin Philips SAC305 with order code 0622 149 00106. If lead-free solder paste is required, please contact the manufacturer of your soldering equipment. In general, use of solder paste within workshops should be avoided because paste is not easy to store and to handle.
- Use only adequate solder tools applicable for lead-free soldering tin. The solder tool must be able
  - To reach at least a solder-tip temperature of 400°C.
  - To stabilise the adjusted temperature at the solder-tip.
  - To exchange solder-tips for different applications.
- Adjust your solder tool so that a temperature around 360°C - 380°C is reached and stabilised at the solder joint. Heating time of the solder-joint should not exceed ~ 4 sec. Avoid temperatures above 400°C, otherwise wear-out of tips will rise drastically and flux-fluid will be destroyed. To avoid wear-out of tips, switch “off” unused equipment or reduce heat.
- Mix of lead-free soldering tin/parts with leaded soldering tin/parts is possible but PHILIPS recommends strongly to avoid mixed regimes. If not to avoid, clean carefully the solder-joint from old tin and re-solder with new tin.
- Use only original spare-parts listed in the Service-Manuals. Not listed standard material (commodities) has to be purchased at external companies.
- Special information for lead-free BGA ICs: these ICs will be delivered in so-called "dry-packaging" to protect the IC against moisture. This packaging may only be opened short before it is used (soldered). Otherwise the body of the IC gets "wet" inside and during the heating time the structure of the IC will be destroyed due to high (steam-)pressure inside the body. If the packaging was opened before usage, the IC has to be heated up for some hours (around 90°C) for drying (think of ESD-protection !).
  Do not re-use BGAs at all!
- For sets produced before 1.1.2005, containing leaded soldering tin and components, all needed spare parts will be available till the end of the service period. For the repair of such sets nothing changes.

2.3.5 Practical Service Precautions

- **It makes sense to avoid exposure to electrical shock.** While some sources are expected to have a possible dangerous impact, others of quite high potential are of limited current and are sometimes held in less regard.
- **Always respect voltages**. While some may not be dangerous in themselves, they can cause unexpected reactions - reactions that are best avoided. Before reaching into a powered TV set, it is best to test the high voltage insulation. It is easy to do, and is a good service precaution.

Philips Flat TV software upgrade

Introduction

Philips offers software upgrade capability for your TV using portable memory or USB mass storage compliant devices (e.g. USB memory stick, compact flash card…)
After you have completed a software upgrade, your TV will typically perform better.
What improvements are made depends on the upgrade software you are using as well as the software your TV contained before the upgrade.
You can execute the software upgrade procedure yourself.

Preparing a portable memory for software upgrade

For the procedure you will require:

- A personal computer with web browsing capability.
- An archive utility that supports the ZIP-format (e.g. WinZip for Windows or StuffIt for Mac OS).
- A preferably empty memory card or USB memory stick.
  Supported types: CompactFlash Card Type I & II, IBM Microdrive, Memory Stick, SecureDigital Card / Mini SD Card, SmartMedia Card, MultiMedia Card.
  Note: Only FAT/DOS-formatted portable memory is supported.

New software can be obtained from your dealer or can simply be downloaded from the **www.philips.com/support** website:

1. Go to **www.philips.com/support** using your web browser.
2. Follow the procedure to find the information and the software related to your set type.
3. Select the latest software upgrade image and download it to your PC.

Copy the latest TV software from your PC to the portable memory:

4. A software upgrade image consists of a Zip archive that contains the files that need to be copied to the portable memory.
   Decompress the **complete archive** (including the directory structure PHILIPS\HETV\...) to the portable memory. The root directory of the portable memory should contain a directory "PHILIPS" containing a sub-directory "HETV" which will hold several files.
   *Note: Only use software upgrades that can be found on the **www.philips.com/support** web site.*

Verifying the version of the TV software

Before starting the software upgrade procedure, it is advised to check what the current TV software is.
The current TV software version can be seen in the Customer Service Menu.
To activate the Customer Service Menu quickly enter the code 1-2-3-6-5-4 on the remote control while the TV is on and the menu is not activated.

Example: TL31E-**1.1**_07281 is displayed.
The software version is 1.1.

CUSTOMER SERVICE MENU 1

1	SW Version	TL31E-1.1_07281
2	Set Type	32PF9956/12
3	Production Code	AG1A0405000001
4	Code 1	00 00 00 00 00
5	Code 2	00 00 00 00 00
6	Volume	32
7	Brightness	37
8	Contrast	80
9	Colour	53
10	Hue	1

Software upgrade procedure

1. Power off your TV and remove all inserted memory cards or connected USB devices.
2. Insert the portable memory that contains the downloaded software upgrade:
   In case of a memory card insert the card in one of the card slots at the right side of the TV.
   In case of a USB memory stick connect it to the USB connector at the left side of the TV.

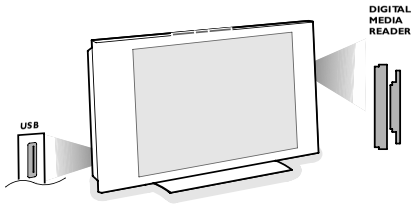

3. Switch on your TV with the power switch ⏻ at the right side of the TV.
4. At startup the TV will scan the memory card until it finds the update content. The TV will automatically go to the upgrade mode. After a few seconds it will display the status of the upgrade procedure.

Warnings:
- *You are not allowed to remove the memory card during the software upgrade procedure!*
- *In case of a power drop during the upgrade procedure, don't remove the portable memory from the TV. The TV will continue the upgrade as soon as the power comes back.*

3. Directions for Use

You can download the User Manual from the following website:
http://www.philips.com/support
As the software upgrade is a new feature, it is explained below.

5 When the software upgrade is completed you should see one of the following screens.

If the upgrade was successful.

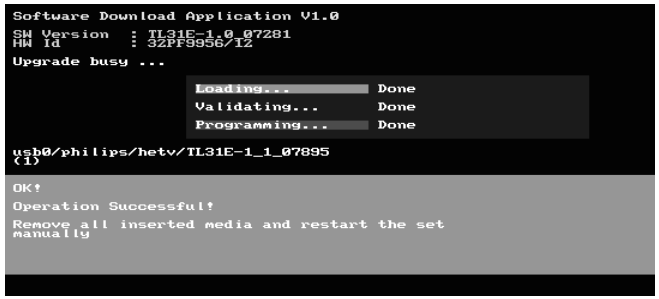

If an error occurred during the upgrade you should retry the procedure or contact your dealer.

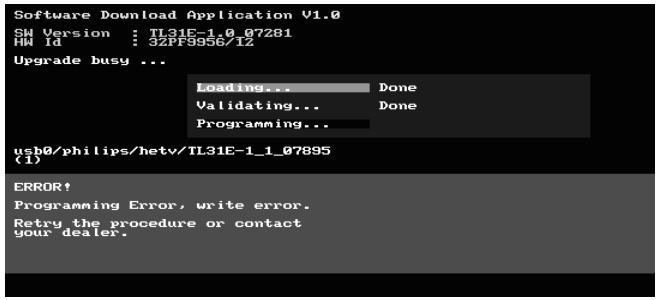

6 When the software upgrade was successful, remove the portable memory and restart your TV with the power switch ⏻ at the right side of the TV.
Your TV will start up with the new software.
Note: Once the upgrade is finished use your PC to remove the TV software from your portable memory by deleting the "PHILIPS" directory and all its contents.

Notes

- If the software version of the upgrade was identical to the current one the TV will still go to the upgrade mode but the upgrade itself will not start automatically. A green message box will inform you if the TV software is up to date.

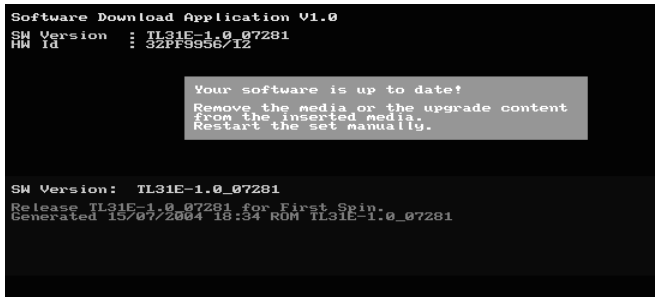

- You can still overrule the warning manually by pressing any remote key. You will see a file selection box. Select the software upgrade file and press the **OK** key to start the TV software upgrade.

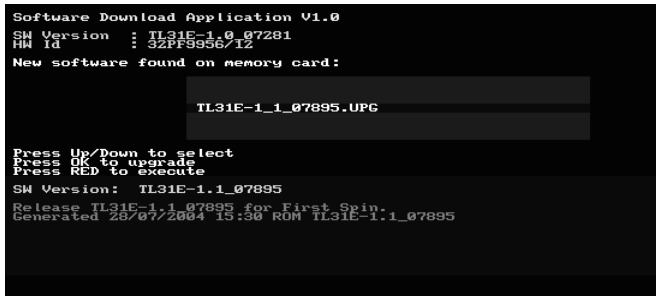

- If you try to upgrade to software equal or lower than the current version, a confirmation will be asked just after the validation phase. Press the cursor left/right to select **Yes** or **No** and press the **OK** key to confirm.
Note: Downgrading to older software should only be done in case of real necessity.

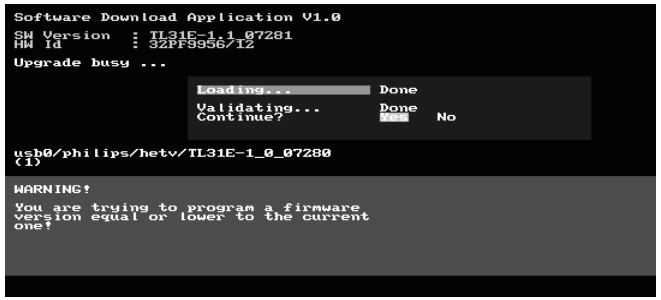

4. Mechanical Instructions

Index of this chapter:

4.1 Cable Dressing
4.2 Service Positions
4.3 Assy/Panel Removal
4.4 Set Re-assembly

Notes:

- Figures below can deviate slightly from the actual situation, due to the different set executions.
- Follow the disassemble instructions in described order.

4.1 Cable Dressing

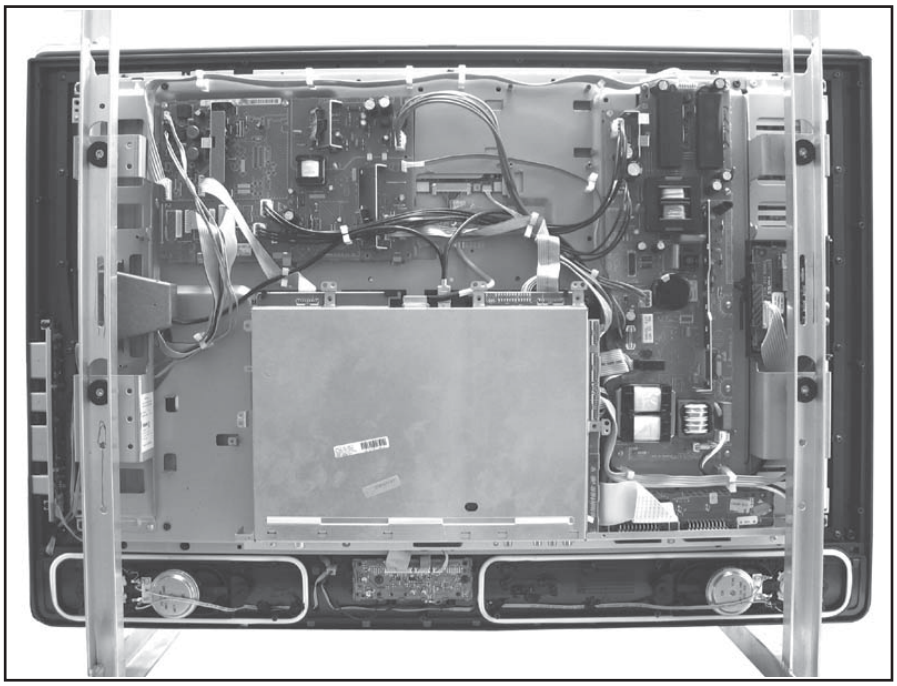

E _14700_055.eps
300904

Figure 4-1 Cable dressing

4.2 Service Positions

For easy servicing of this set, there are a few possibilities created:

- The buffers from the packaging.
- Foam bars (created for service).
- Aluminium service stands (created for Service).

4.2.1 Foam Bars

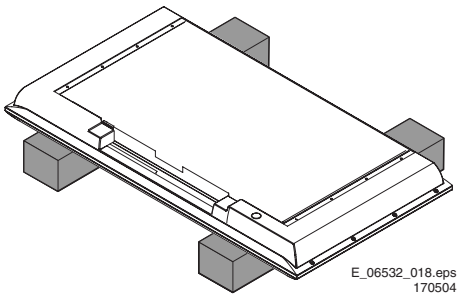

E_06532_018.eps
170504

Figure 4-2 Foam bars

The foam bars (order code 3122 785 90580 for two pieces) can be used for all types and sizes of Flat TVs. By laying the TV face down on the (ESD protective) foam bars, a stable situation is created to perform measurements and alignments.
By placing a mirror under the TV, you can monitor the screen.

4.2.2 Aluminium Stands

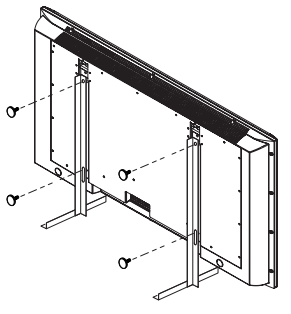

E_06532_019.eps
170504

Figure 4-3 Aluminium stands (drawing of MkI)

The new MkII aluminium stands (not on drawing) with order code 3122 785 90690, can also be used to do measurements, alignments, and duration tests. The stands can be (dis)mounted quick and easy by means of sliding them in/out the "mushrooms". The new stands are backwards compatible with the earlier models.
Important: For (older) FTV sets without these "mushrooms", it is obligatory to use the provided screws, otherwise it is possible to damage the monitor inside!.

4.3 Assy/Panel Removal

4.3.1 Metal Back Plate

Caution: Disconnect the AC Power (mains) cord before you remove the metal back plate.

1. Place the TV set upside down on a table top, using the foam bars (see part "Foam Bars").
   Caution: do **not** put pressure on the display, but let the monitor lean on the speakers or the Front cover.
2. Remove all T10 screws from the metal back plate.
3. Remove the four "mushrooms" from the back plate.
4. Lift the back plate from the set. Make sure that wires and flat foils are not damaged during the back plate removal.

4.3.2 Rear Cover

1. Remove all T10 parker screws around the edges of the rear cover.
2. Lift the rear cover from the set.

4.3.3 Stand-by Supply/Audio Panel

1. Disconnect all cables from the Stand-by Supply/Audio panel.
2. Remove all T10 mounting screws from the Stand-by Supply/Audio panel.
3. Take out the Stand-by Supply/Audio panel (it hinges at the bottom side).

4.3.4 MF Supply Panel

1. Disconnect all cables from the MF Supply panel.
2. Remove all T10 mounting screws from the MF Supply panel.
3. Take out the panel.

4.3.5 Side I/O Panel

1. Disconnect the cable(s) from the panel.
2. Remove the T10 mounting screws that hold the assy.
3. Release the clamps and take out the panel from its bracket.

4.3.6 External I/O Panel

1. Disconnect the flat foil cable on the panel.
2. Remove the mounting screws near each connector at the connector plate.
3. Take out the panel.

4.3.7 LED Panel

1. Disconnect the cable(s) from the panel.
2. Remove the T10 mounting screws that hold the panel.
3. Take out the panel.

4.3.8 Control Panel

1. Disconnect the cable(s) from the panel.
2. Remove the T10 mounting screws that hold the assy.
3. Release the clamps and take out the panel from its bracket.

4.3.9 Multi Media Card Reader

1. Unplug the related USB cable at the top of the SSB.
2. Remove the two T10 mounting screws that hold the assy.

When defective, replace the whole unit.

4.3.10 Speakers

After removal of the rear cover, you can access the speakers.
Note: In the rear cover itself, two additional “passive” speakers are mounted. It is very important that they operate in a airtight environment. Be sure that the foam that makes the unit airtight is not damaged. Otherwise, replace it.

4.3.11 Small Signal Board (SSB)

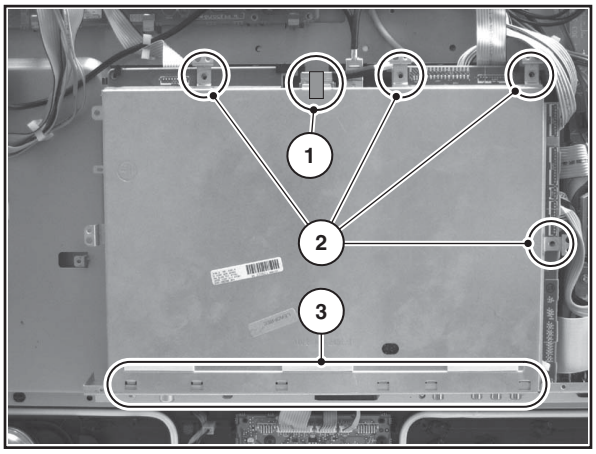

E_14700_050.eps
300904

Figure 4-4 SSB top shielding

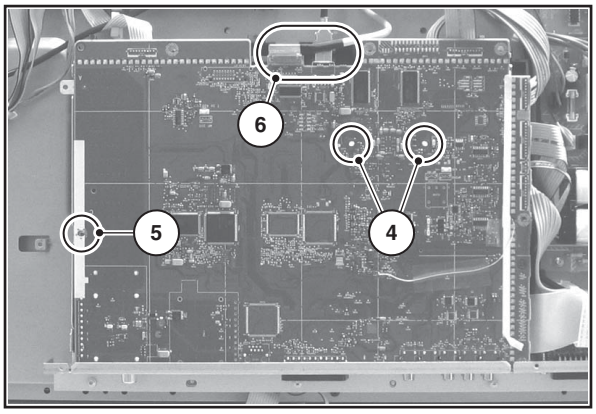

E _14700_054.eps
300904

Figure 4-5 SSB

1. Remove the fixing tape (1) on the LVDS connector.
2. Remove all fixing screws (2).
3. Lift the shielding at the top and shift it upwards. Some force may be necessary, as the shielding clamps at the connector side.
4. Remove all connector fixation screws at the connector plate (3).
5. Remove the mounting screw(s) from the SSB (5).
6. **Important:** Before lifting the SSB, release the two plastic clamps (4), with e.g. a pair of pliers, in order to release the heatsink of the Viper IC. If you forget this, the SSB cannot be taken out!
7. Unplug the LVDS and USB cables at the top of the SSB (6).
8. Lift the SSB, disconnect all other cables, and take out the SSB.
9. After removal of the SSB, you can see the Viper heatsink “sticked” to the bottom shielding by means of the thermal foam (see figure “Viper heatsink removal”).

To remove this heatsink, **carefully** pull it away from the heatsink. When you do this properly, the thermal foam can be re-used (during non-use, keep it away from dirt).

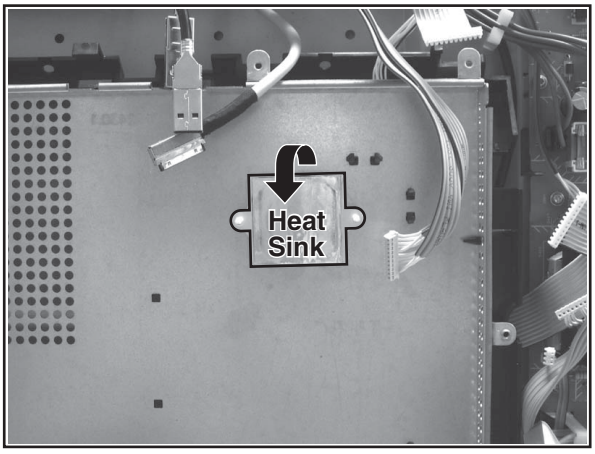

E_14700_053.eps
300904

Figure 4-6 Viper heatsink removal

4.3.12 LCD Panel

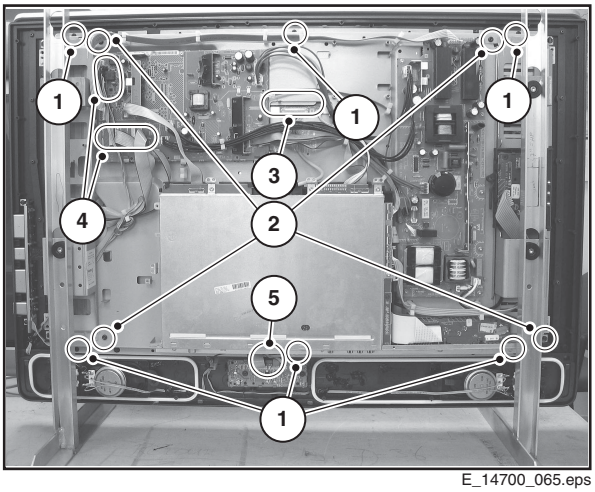

E_14700_065.eps
141004

Figure 4-7 LCD panel removal

1. Remove the T10 screws (1) from the mounting frame.
2. Remove all LCD panel mounting T20 screws (2).
3. **Important:** Unplug the cable(s) at the LCD panel (3). **Be careful**, the LVDS connector (CN1) is very fragile!
4. Unplug the backlight and loudspeaker cables on the Audio/ Stand-by panel (4).
5. Unplug all cables on the LED panel (5).
6. Lift the metal frame (together with all PWBs) from the LCD panel. During lift, free the backlight and speaker cables.
7. After removal of the frame, you can lift the LCD display from the set.

4.4 Set Re-assembly

To re-assemble the whole set, execute all processes in reverse order.

Notes:

- While re-assembling, make sure that all cables are placed and connected in their original position. See figure "Cable dressing".
- During re-assembly of the SSB, it is important that the heatsink of the Viper IC, together with the thermal foam, is mounted on the chip **before** the SSB is re-placed (see figure “Heatsink mounting“). Place the heatsink on top of the Viper IC (do **not** use cooling paste), and push the clamps through the appropriate holes in the PWB.
- Pay special attention not to damage the EMC foams on the SSB shields. Control that EMC foams are mounted correctly.
- Insulate the tuner pins, so that they cannot touch the shielding (see also figure “SDM Service jumper” in Chapter 5).

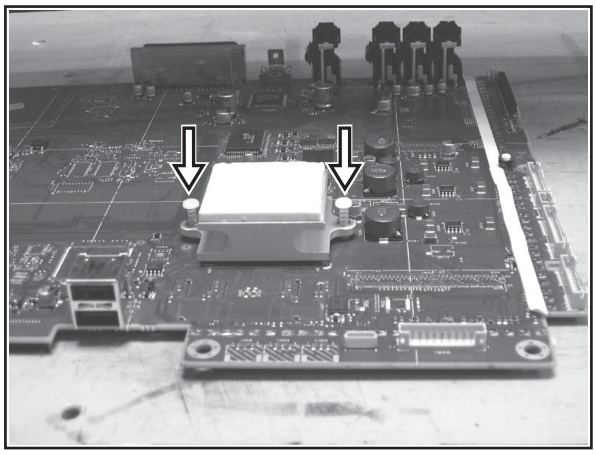

E_14700_051.eps
300904

Figure 4-8 Heatsink mounting

5. Service Modes, Error Codes, and Fault Finding

Index of this chapter:

5.1 Test Points
5.2 Service Modes
5.3 Stepwise Start-up
5.4 ComPair
5.5 Error Codes
5.6 The Blinking LED Procedure
5.7 Protections
5.8 Repair Tips
5.9 Software Upgrading
5.10 Start-up flow charts

5.1 Test Points

The chassis is equipped with test points printed on the circuit board assemblies.

Perform measurements under the following conditions:
- Service Default Mode.
- Video: colour bar signal.
- Audio: 3 kHz left, 1 kHz right.

5.2 Service Modes

Service Default Mode (SDM) and Service Alignment Mode (SAM) offer several features for the service technician, while the Customer Service Mode (CSM) is used for communication between a Philips Customer Care Centre (P3C) and a customer.

There is also the option of using ComPair, a hardware interface between a computer (see requirements below) and the TV chassis. It offers the ability of structured troubleshooting, test pattern generation, error code reading, software version read-out, and software upgrading.
Minimum requirements: a Pentium processor, Windows 95/ 98, and a CD-ROM drive (see also paragraph “ComPair”).

5.2.1 Service Default Mode (SDM)

Purpose
- To create a pre-defined setting, to get the same measurement results as given in this manual.
- To override SW protections and make the TV start up to the step just before protection (a sort of automatic stepwise start up). See paragraph “Stepwise Start Up”.
- To start the blinking LED procedure (not valid in protection mode).

Specifications
- Tuning frequency: 475.25 MHz for PAL.
- Colour system: PAL B/G.
- All picture settings at 50% (brightness, colour, contrast).
- All sound settings at 50%, except volume at 25%.
- All service-unfriendly modes (if present) are disabled, like:
  - (Sleep) timer.
  - Child/parental lock.
  - Blue mute.
  - Automatic volume limiter (AVL).
  - Auto switch-off (when no video signal was received for 10 minutes).
  - Skip/blank of non-favourite pre-sets.
  - Smart modes.
  - Auto store of personal presets.
  - Auto user menu time-out.

How to activate SDM
Use one of the following methods:
- Use the standard RC-transmitter and key in the code **“062596”**, directly followed by the “MENU” button.
  Note: It is possible that, together with the SDM, the main menu will appear. To switch it off, push the “MENU” button again.
- Short for a moment the two solder pads on the SSB, with the indication “SDM” (see figure “Power supply indicators“ in paragraph “Repair Tips”). Activation can be performed in all modes, except when the set has a problem with the Stand-by microprocessor.
- Use the DST-emulation feature of ComPair.
- Use the “DEFAULT” button on the Dealer Service Tool (RC7150).

After activating this mode, “SDM” will appear in the upper right corner of the screen.

How to navigate
When you press the “MENU” button on the RC transmitter, the set will toggle between the SDM and the normal user menu (with the SDM mode still active in the background).

How to exit SDM
Use one of the following methods:
- Switch the set to STAND-BY via the RC-transmitter.
- It is possible that in some SW older versions this method does **NOT** work. To check this, do the following:
  - Activate SDM
  - Switch TV to stand-by
  - Switch TV back on (now you will note that SDM is de-activated)
  - Disconnect power cord from mains.
  - Connect power cord again
  - Check if TV starts in SDM. If this is the case you should use the exit method via normal RC, the “00”-sequence.
- Press the “EXIT” button on the DST.
- Via a standard customer RC-transmitter: key in “00”-sequence.

5.2.2 Service Alignment Mode (SAM)

Purpose
- To perform (software) alignments.
- To change option settings.
- To easily identify the used software version.
- To view operation hours.
- To display (or clear) the error code buffer.

Specifications
- Operation hours counter.
- Software version.
- Option settings.
- Error buffer reading and erasing.
- Software alignments.

How to activate SAM
Use one of the following methods:
- Via a standard RC transmitter: key in the code “062596” directly followed by the “OSD [i+]” button. After activating SAM with this method a service warning will appear on the screen, you can continue by pressing any digit key on the RC.
- Use the DST-emulation feature of ComPair.
- Press the ALIGN button on the DST while the set is in the normal operation.
- Shorting the two solder pads on the SSB, with the indication “SAM”. Will **NOT** function any more, these pads are still available on the SSB but do not function.

After activating this mode, “SAM” will appear in the upper right corner of the screen.

Contents of SAM:

- **HARDWARE INFO.**
  - **Viper SW Version.** Displays the software version of the VIPER software (main software). (**Example:** TL31E_1.0_01234 = AAAAB_X.Y_NNNNN).
    - **AAAA**= the chassis name (e.g. TL31= FTL3.1).
    - **B**= the region: E= Europe.
    - **X.Y**= the software version, where X is the main version number (different numbers are not compatible with one another) and Y is the sub version number (a higher number is always compatible with a lower number).
    - **NNNNN**= last five digits of 12nc code of the software.
  - **SBY PROC Version.** Displays the software version of the stand-by processor.
  - **Production Code**. Displays the production code of the TV, this is the serial number as printed on the back of the TV set.
- **OPERATION HOURS.** Displays the accumulated total of operation hours (not the stand-by hours). Every time the TV is switched on/off, 0.5 hours is added to the this number.
- **ERRORS.** (Followed by maximal 10 errors). The most recent error is displayed at the upper left (for an error explanation see paragraph “Error Codes”).
- **DEFECTIVE MODULE.** Here the module that generates the error is displayed. If there are multiple errors in the buffer, which are not all generated by a single module, there is probably another defect. It will then display the message “UNKNOWN” here.
- **RESET ERROR BUFFER.** When you press the “OK” button, the error buffer is reset.
- **ALIGNMENTS.** This will activate the “ALIGNMENTS” sub-menu.
- **DEALER OPTIONS.** Extra features for the dealers.
- **OPTIONS.** Extra features for Service.
- **INITIALISE NVM.** When an NVM was corrupted (or replaced) in the former EM3 chassis, the microprocessor replaces the content with default data (to assure that the set can operate). However, all pre-sets and alignment values are gone now, and option numbers are not correct. Therefore, this was a very drastic way. In this chassis, the procedure is implemented in another way: The moment the processor recognises a corrupted NVM, the “initialise NVM” line will be highlighted. Now, you can do two things (dependent of the service instructions at that moment):
  - Save the content of the NVM via ComPair for development analysis, **before** initialising. This will give the Philips Service department an extra possibility for diagnosis (e.g. when Development asks for this).
  - Initialise the NVM (same as in the past, however now it happens conscious).
- **STORE.** All options and alignments are stored when pressing the “OK”-button
- **FUNCTIONAL TEST.** All devices are tested via the “OK” button. Eventual errors are displayed in the error buffer. The error buffer is not erased, the content returns when this test is terminated. It is possible that with some software versions, this function does not function. It is strongly advice to check for errors by switching the TV on and off.
- **SW MAINTENANCE.**
  - **SW Events.** Not useful for service purposes. In case of specific software problems, the development department can ask for this info.
  - **HW Events.** Not functional at the moment this manual is released, description will be published in an update manual if the function becomes available.

How to navigate

- In SAM, you can select the menu items with the “CURSOR UP/DOWN” key on the RC-transmitter. The selected item will be highlighted. When not all menu items fit on the screen, move the “CURSOR UP/DOWN” key to display the next/previous menu items.
- With the “CURSOR LEFT/RIGHT” keys, it is possible to:
  - (De) activate the selected menu item.
  - Change the value of the selected menu item.
  - Activate the selected sub menu.

How to exit SAM

Use one of the following methods:

- Press the “MENU” button on the RC-transmitter, or
- Switch the set to STAND-BY via the RC-transmitter, or
- Press the “EXIT” button on the DST.

5.2.3 Customer Service Mode (CSM)

Purpose

When a customer is having problems with his TV-set, he can call his dealer. The service technician can then ask the customer to activate the CSM, in order to identify the status of the set. Now, the service technician can judge the severity of the complaint. In many cases, he can advise the customer how to solve the problem, or he can decide if it is necessary to visit the customer.
The CSM is a read only mode; therefore, modifications in this mode are not possible.

How to activate CSM

Key in the code **“123654”** via the standard RC transmitter.

Note: Activation of the CSM is only possible if there is no (user) menu on the screen!

How to navigate

By means of the “CURSOR-DOWN/UP” knob on the RC-transmitter, you can navigate through the menus.

Contents of CSM

CUSTOMER SERVICE MENU 1

- **SOFTWARE VERSION (example: TL31EU_1.0_01234).** Displays the built-in software version. In case of field problems related to software, software can be upgraded. You will find details of the software versions in the chapter “Software Survey” of the “Product Survey - Colour Television” publication. This publication is generated four times a year. As this software is consumer upgradable, it will also be published on the Internet.
- **SET TYPE.** This information is very helpful for a help desk/ workshop as reference for further diagnosis. In this way, it is not necessary for the customer to look at the rear of the TV-set.
- **Production Code.** Displays the production code of the TV.
- **CODE 1.** Gives the latest five errors of the error buffer. As soon as the built-in diagnose software has detected an error the buffer is adapted. The last occurred error is displayed on the leftmost position. Each error code is displayed as a 2-digit number. When less than 10 errors occur, the rest of the buffer is empty (00). See also paragraph Error Codes for a description.
- **CODE 2.** Gives the first five errors of the error buffer. See also paragraph Error Codes for a description.
- **VOLUME.** Gives the last status of the volume as set by the customer. The value can vary from 0 (volume is minimum) to 100 (volume is maximum). Volume values can be changed via the volume key on the RC-transmitter.
- **BRIGHTNESS.** Gives the last status of the brightness as set by the customer. The value can vary from 0 (brightness is minimum) to 100 (brightness is maximum). Brightness values can be changed via the “CURSOR LEFT” and

"CURSOR RIGHT" keys on the RC-transmitter after pressing the "MENU" button and selecting "PICTURE" and "BRIGHTNESS".

- **CONTRAST.** Gives the last status of the contrast as set by the customer. The value can vary from 0 (contrast is minimum) to 100 (contrast is maximum). Contrast values can be changed via "CURSOR LEFT" and "CURSOR RIGHT" keys on the RC-transmitter after pressing the "MENU" button and selecting "PICTURE" and "CONTRAST".
- **COLOUR.** Gives the last status of the colour saturation, as set by the customer. The value can vary from 0 (colour is minimum) to 100 (colour is maximum). Colour values can be changed via "CURSOR LEFT" and "CURSOR RIGHT" keys on the RC-transmitter after pressing the "MENU" button and selecting "PICTURE" and "COLOUR".
- **HUE.** Only relevant for NTSC-signals (e.g. some NTSC-DVD-discs).

CUSTOMER SERVICE MENU 2

- **SHARPNESS.** Gives the sharpness value. The value can vary from 0 (sharpness is minimum) to 7 (sharpness is maximum). In case of bad antenna signals, a too high value of the sharpness can result in a noisy picture. Sharpness values can be changed via the "CURSOR LEFT" and "CURSOR RIGHT" keys on the RC-transmitter after pressing the "MENU" button and selecting "PICTURE" and "SHARPNESS".
- **HEADPHONE VOLUME.** Gives the last status of the head phone volume, as set by the customer. The value can vary from 0 (volume is minimum) to 100 (volume is maximum). Head phone volume values can be changed via the "CURSOR LEFT" and "CURSOR RIGHT" keys on the RC-transmitter after pressing the "MENU" button and selecting "SOUND" and "HEADPHONE VOLUME".
- **DOLBY.** Indicates whether the received transmitter transmits Dolby sound ("ON") or not ("OFF"). Attention: The presence of Dolby can only be tested by the software on the Dolby Signalling bit. If a Dolby transmission is received without a Dolby Signalling bit, this indicator will show "OFF" even though a Dolby transmission is received.
- **SURROUND MODE.** Indicates the by the customer selected surround mode (or automatically chosen mode). Possible values are "OFF", "INCREDIBLE SURROUND" OR "DOLBY VIRTUAL". These settings can be influenced after pressing the "MENU" button and selecting "SOUND" and SURROUND MODE". It can also have been selected automatically by signalling bits (internal software).
- **TUNER FREQUENCY.** Indicates the frequency the selected transmitter is tuned to. The tuner frequency can be changed via the "CURSOR LEFT" and "CURSOR RIGHT" keys for fine tune after opening the installation menu and selecting "INSTALL" and "MANUAL INSTALL".
- **DIGITAL OPTION.** Gives the selected digital mode, "PROGRESSIVE SCAN", "MOVIE PLUS" or "PIXEL PLUS". Change via "MENU", "PICTURE", "DIGITAL OPTIONS".
- **TV SYSTEM.** Gives information about the video system of the selected transmitter.
  - West Europe
  - East Europe
  - UK

CUSTOMER SERVICE MENU 3

- **BALANCE.** Indicates the balance settings, between "-50" and "+50". Change via "MENU", "SOUND", and "BALANCE".
- **CENTRE MODE.** Not applicable.
- **DNR.** Gives the selected DNR setting (Dynamic Noise Reduction), "OFF", "MINIMUM", "MEDIUM", or "MAXIMUM". Change via "MENU", "PICTURE", "DNR"
- **NOISE FIGURE.** Gives the noise ratio for the selected transmitter. This value can vary from 0 (good signal) to 127 (average signal) and to 255 (bad signal). For some software versions, the noise figure will only be valid when "Active Control" is set to "medium" or "maximum" before activating CSM.
- **SOURCE.** Indicates which sourcehe is used and the video/audio signal quality of the selected source. (Example: Tuner, Video/NICAM) Source: "TUNER", "EXT1", "EXT2", "EXT3", "EXT4", "SIDE", "AV1", "AV2", "AV3" or "AV4". Video signal quality: "VIDEO", "S-VIDEO", "RGB 1FH", "YPBPR 1FH 480P", "YPBPR 1FH 576P", "YPBPR 1FH 1080I", "YPBPR 2FH 480P", "YPBPR 2FH 576P", "YPBPR 2FH 1080I", "RGB 2FH 480P", "RGB 2FH 576P" or "RGB 2FH 1080I". Audio signal quality: "STEREO", "SPDIF 1", "SPDIF 2", or "SPDIF".
- **AUDIO SYSTEM.** Gives information about the audible audio system: Analogue in: no dig audio", "not supported dig audio", "stereo", "mono", "mono selected", "dual I", "dual II", "NICAM stereo", "NICAM mono", "NICAM dual I", "NICAM dual II", "NICAM available", "Dolby digital x/y" (x/y must be replaced by numerals depending on the signal type), "Dolby digital dual I", "Dolby digital dual II", "digital stereo", "dual I", "dual II", "MPEG 2/0", "DVD virtual surround".
- **TUNED BIT.** Gives information about the tuning method of the stored pre-set. If a channel is found via "automatic installation", you will see the value "YES". When you change this (automatically found) frequency via "fine tune" adjustment (installation menu - manual installation), the displayed value will change to "NO". Therefore, when you see the value "NO" in this line, it is an indication that the received channel is a non-standard signal (e.g. of a VCR).
- **SURROUND SPEAKERS.** Not applicable in this set.
- **ON TIMER.** Indicates if the "On Timer" is set "ON" or "OFF" and if the timer is "ON" also displays start time, start day and program number. Change via "MENU", "TV", "FEATURES", and "ON TIMER".
- **PRESET LOCK.** Indicates if the selected preset has a child lock: "LOCKED" or "UNLOCKED". Change via "MENU", "TV", "FEATURES", "CHILD LOCK", and "CUSTOM LOCK".

CUSTOMER SERVICE MENU 4

- **CHILD LOCK.** Indicates the last status of the general child lock: "UNLOCK", "LOCK", or "CUSTOM LOCK". Change via "MENU", "TV", "FEATURES", "CHILD LOCK", and "LOCK".
- **LOCK AFTER.** Indicates at what time the child lock is set: "OFF" or e.g. "18:45" (lock time). This is only displayed if child lock is set to "CUSTOM LOCK"
- **PROGRAM CATEGORY.** This is an EPG feature and not applicable for this chassis.

CUSTOMER SERVICE MENU 5

- **OPTIONS 1.** Gives the option codes of option group 1 as set in SAM (Service Alignment Mode).
- **OPTIONS 2.** Gives the option codes of option group 2 as set in SAM (Service Alignment Mode).
- **AVL.** Indicates the last status of AVL (Automatic Volume Level): "ON" or "OFF". Change via "MENU", "TV", "SOUND", "AVL"
- **DELTA VOLUME.** Indicates the last status of the delta volume for the selected preset as set by the customer: from "-12" to "+12". Change via "MENU", "TV", "SOUND", "DELTA VOLUME".

How to exit CSM

Use one of the following methods:

- After you press a key on the RC-transmitter (with exception of the "CHANNEL +/-", "VOLUME" and digit (0-9) keys), or
- After you switch the TV-set "OFF" with the mains switch.

5.3 Stepwise Start-up

The stepwise start-up method, as known from the EM sets is not valid any more. Because there are only three steps, and all protections occur before the 2nd step, the "old" method was not useful any more.
The situation for this chassis is as follows: when the TV is in a protection state (and thus blinking an error) **and** SDM is activated via shortcutting the pins on the SSB, the TV starts up until it reaches the situation just before protection. So, this is a kind of automatic stepwise start-up. In combination with the start-up diagrams at the end of this chapter (see flow chart figures), you can see which supplies are present at which state.

The abbreviations SP and MP are standing for:
– **SP:** protection or error detected by the **S**tand-by **P**rocessor.
– **MP:** protection or error detected by the Viper **M**ain **P**rocessor.

5.4 ComPair

5.4.1 Introduction

ComPair (Computer Aided Repair) is a service tool for Philips Consumer Electronics products. ComPair is a further development on the European DST (service remote control), which allows faster and more accurate diagnostics. ComPair has three big advantages:
- ComPair helps you to quickly get an understanding on how to repair the chassis in a short time by guiding you systematically through the repair procedures.
- ComPair allows very detailed diagnostics (on I^2C level) and is therefore capable of accurately indicating problem areas. You do not have to know anything about I^2C commands yourself because ComPair takes care of this.
- ComPair speeds up the repair time since it can automatically communicate with the chassis (when the microprocessor is working) and all repair information is directly available. When ComPair is installed together with the Force/SearchMan electronic manual of the defective chassis, schematics and PWBs are only a mouse click away.

5.4.2 Specifications

ComPair consists of a Windows based fault finding program and an interface box between PC and the (defective) product. The ComPair interface box is connected to the PC via a serial (or RS-232) cable.
For this chassis, the ComPair interface box and the TV communicate via a bi-directional service cable via the service connector(s).

The ComPair fault finding program is able to determine the problem of the defective television. ComPair can gather diagnostic information in two ways:
- Automatic (by communication with the television): ComPair can automatically read out the contents of the entire error buffer. Diagnosis is done on I^2C/UART level. ComPair can access the I^2C/UART bus of the television. ComPair can send and receive I^2C/UART commands to the micro controller of the television. In this way, it is possible for ComPair to communicate (read and write) to devices on the I^2C/UART busses of the TV-set.
- Manually (by asking questions to you): Automatic diagnosis is only possible if the micro controller of the television is working correctly and only to a certain extend. When this is not the case, ComPair will guide you through the fault finding tree by asking you questions (e.g. *Does the screen give a picture? Click on the correct answer: YES / NO*) and showing you examples (e.g. *Measure test-point I7 and click on the correct oscillogram you see on the oscilloscope*). You can answer by clicking on a link (e.g. text or a waveform picture) that will bring you to the next step in the fault finding process.

By a combination of automatic diagnostics and an interactive question / answer procedure, ComPair will enable you to find most problems in a fast and effective way.

Beside fault finding, ComPair provides some **additional features** like:
- Up- or downloading of pre-sets.
- Managing of pre-set lists.
- Emulation of the (European) Dealer Service Tool (DST).
- If both ComPair and Force/SearchMan (Electronic Service Manual) are installed, all the schematics and the PWBs of the set are available by clicking on the appropriate hyperlink.
  Example: *Measure the DC-voltage on capacitor C2568 (Schematic/Panel) at the Mono-carrier*.
  – Click on the "Panel" hyperlink to automatically show the PWB with a highlighted capacitor C2568.
  – Click on the "Schematic" hyperlink to automatically show the position of the highlighted capacitor.

5.4.3 How To Connect

This is described in the chassis fault finding database in ComPair.

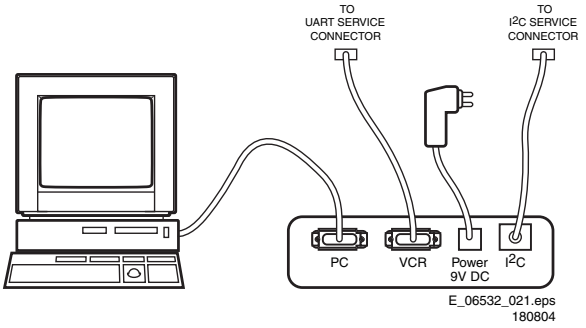

Figure 5-1 ComPair interface connection

5.4.4 How To Order

ComPair order codes (EU/AP/LATAM):
- Starter kit ComPair32/SearchMan32 software and ComPair interface (excl. transformer): 3122 785 90450.
- ComPair interface (excluding transformer): 4822 727 21631.
- Starter kit ComPair32 software (registration version): 3122 785 60040.
- Starter kit SearchMan32 software: 3122 785 60050.
- ComPair32 CD (update): 3122 785 60070 (year 2002, 3122 785 60110 (year 2003).
- SearchMan32 CD (update): 3122 785 60080 (year 2002), 3122 785 60120 (year 2003), 3122 785 60130 (year 2004).
- ComPair firmware upgrade IC: 3122 785 90510.
- Transformer (non-UK): 4822 727 21632.
- Transformer UK: 4822 727 21633.
- ComPair UART interface cable: 3122 785 90630

Note: If you encounter any problems, contact your local support desk.

5.5 Error Codes

5.5.1 Introduction

The error code buffer contains all detected errors since the last time the buffer was erased. The buffer is written from left to

right, new errors are logged at the left side, and all other errors shift one position to the right.
When an error has occurred, the error is added to the list of errors, provided the list is not full or the error is a protection error.
When an error occurs and the error buffer is full, then the new error is not added, and the error buffer stays intact (history is maintained), except when the error is a protection error.
To prevent that an occasional error stays in the list forever, the error is removed from the list after 50+ operation hours.
When multiple errors occur (errors occurred within a short time span), there is a high probability that there is some relation between them.

5.5.2 How to read the Error Buffer

Use one of the following methods:
- On screen via the SAM (only if you have a picture). Examples:
  - **00 00 00 00 00**: No errors detected
  - **06 00 00 00 00**: Error code 6 is the last and only detected error
  - **09 06 00 00 00**: Error code 6 was first detected and error code 9 is the last detected error
- Via the blinking LED procedure (when you have no picture). See next paragraph.
- Via ComPair.

5.5.3 How to clear the Error Buffer

Use one of the following methods:
- By activation of the “RESET ERROR BUFFER” command in the SAM menu.
- With a normal RC, key in sequence “MUTE” followed by **“062599”** and “OK”.
- When you transmit the commands “DIAGNOSE” - “99” - “OK” with ComPair (or with a DST).
- If the content of the error buffer has not changed for 50+ hours, it resets automatically.

5.5.4 Error Codes

In case of non-intermittent faults, clear the error buffer before you begin the repair. This to ensure that old error codes are no longer present. Before clearing the buffer, write down the content, as this history can give you significant information.
If possible, check the entire contents of the error buffer. In some situations, an error code is only the result of another error code and not the actual cause (e.g., a fault in the protection detection circuitry can also lead to a protection).
There are several mechanisms of error detection:
- Via error bits in the status registers of ICs (not used in this chassis).
- Via polling on I/O pins going to the Stand-by microprocessor.
- Via sensing of analogue values on the Stand-by microprocessor (ADC).
- Via a “not acknowledge” state of an I^2C IC-communication.

The errors can be divided into two blocks:
- **Errors detected via the stand-by processor (stand-by software):** Errors detected via the stand-by processor cause a protection. These errors are NOT logged but blinked via the front led. You do not have to start the blinking LED procedure manually; it starts automatic when a protection occurs.
- **Errors detected via the Viper (main software):** Errors detected via the Viper do not cause a protection; these errors are logged in the error buffer.

Table 5-1 Error code overview

Error	Device	Description	Defective Module	Expected result
5	PNX8550	Viper doesn't boot	Control	Protection + error 5 blinks
6	n.a.	5V supply	+5V Supply	Protection + error 6 blinks
7	n.a.	8V6 supply	+8V Supply	Protection + error 7 blinks
8	n.a.	1.2V DC/DC	+1V2 Supply	Protection + error 8 blinks
9	n.a.	2.5V DC/DC	+2V5 Supply	Protection + error 9 blinks
11	n.a.	3.3V DC/DC	+3V3 Supply	Protection + error 11 blinks
12	n.a.	12V supply	+12V Supply	Protection + error 12 blinks
13	n.a.	Audio Supply	Audio Supply	Protection + error 13 blinks
14	n.a.	Class D	Class D Supply	Protection + error 14 blinks
15	PNX3000	MPIF1 POR not available	IF IO	Error 15 logged
17	PNX3000	MPIF1 audio supply (ASUP)	IF IO	Error 17 logged
18	PNX3000	MPIF1 ref. freq. (ROK)	IF IO	Error 18 logged
25	n.a.	Supply Fault	DC-DC Supply	Protection + error 25 blinks
29	PNX2000	AVIP1	AV Input Processor	Error 29 logged
32	PNX3000	MPIF1	Analog Front End 1	Error 32 logged
34	UV1318/TEDH700A	Tuner1	Tuner 1	Error 34 logged
38	PCA9555	I/O expander audio	Audio IO expander	Error 38 logged
43	TDA8751	Hi Rate Front End	HDMI	Error 43 logged
44	M24C32	Main NVM	NVM	Error 44 blinks
45	T6TU5XB	Columbus 1	Comb filter	Error 45 logged

5.6 The Blinking LED Procedure

5.6.1 Introduction

The blinking LED procedure can be split up into two situations:
- Blinking LED procedure in case of protection. In case the TV gets in a protection state, the error is automatically blinked. This will be only one error, namely the one that's causing the protection. Therefore, you do not have to do anything special, just read out the blinks. Long blink indicates the decimal digit, short blink indicates the units.
- Blinking LED procedure in the "on" state. Via this procedure, you can make the contents of the error buffer visible via the front LED. This is especially useful for fault finding, when there is no picture.

When the blinking LED procedure is activated in the "ON" state, the front LED will show (blink) the contents of the error-buffer. Error-codes > 10 are shown as follows:
1. A long blink of 750 ms (which is an indication of the decimal digit),
2. A pause of 1.5 s,
3. "n" short blinks (where "n"= 1 - 9),
4. When all the error-codes are displayed, the sequence finishes with a LED blink of 3 s,
5. The sequence starts again.

Example: Error 12 9 6 0 0.
After activation of the SDM, the front LED will show:
1. 1 long blink of 750 ms (which is an indication of the decimal digit) followed by a pause of 1.5 s,
2. 2 short blinks of 250 ms followed by a pause of 3 s,
3. 9 short blinks followed by a pause of 3 s,
4. 6 short blinks followed by a pause of 3 s,
5. 1 long blink of 3 s to finish the sequence,
6. The sequence starts again.

5.6.2 How to Activate

Use one of the following methods:
- Activate the SDM (only via soldering pads marked "SDM" on SSB). The blinking front LED will show the entire contents of the error buffer (this works in "normal operation" mode).
- Transmit the commands "MUTE" - **"062500"** - "OK" with a normal RC. The complete error buffer is shown. Take notice that it takes some seconds before the blinking LED starts.
- Transmit the commands "MUTE" - **"06250x"** - "OK" with a normal RC (where "x" is a number between 1 and 5). When x= 1 the last detected error is shown, x= 2 the second last error, etc.... Take notice that it takes some seconds before the blinking LED starts.
- "DIAGNOSE X" with the DST (where "x" is a number between 1 and 9). When x= 1 the last detected error is shown, x= 2 the second last error, etc.... When x= 0 all errors are shown.

5.7 Protections

Most of the protections and errors use either the Stand-by microprocessor or the Viper controller as detection mechanism. Since in these cases, checking of observers, polling of ADCs, and filtering of input values are all heavily software based, these protections are referred to as "software protections".
There are several types of software related protections, solving a variety of fault conditions:
- **Protections related to supplies:** check of the 12V, +5V, +8V6, +1.2V, +2.5V and +3.3V.
- **Protections related to breakdown of the safety check mechanism.** E.g. since a lot of protection detections are done by means of the Viper, failing of the Viper communication will have to initiate a protection mode since safety cannot be guaranteed any more.

These protections use various mechanisms of detection:
- Via error bits in the status registers of ICs (not used in this chassis).
- Via polling on I/O pins going to the Stand-by microprocessor.
- Via sensing of analogue values on the Stand-by microprocessor (ADC).
- Via a "not acknowledge" state of an I^2C IC-communication.

Remark on both Protect-Audio and Audio-Supply-Prot:
The monitoring of these observers should only start 1 s after switching "on" the audio supply (enabling main supply through STAND-BY line toggling, see start-up description) because some peak currents could be drawn out of the supply during start-up falsely indicating a protection situation.

Remark on the supply errors:
The detection of a supply dip or supply loss during the normal playing of the set does not lead to a protection, but to a cold reboot of the set.

Protections during start-up of the set.
During start-up of the set some voltages and IC observers are actively monitored, to be able to optimise the start-up speed and to assure good operation of all components. If these monitors do not respond in a defined way, this indicates a malfunction of the system and leads to a protection.

Overview of the start-up protections:
- Nominal level detection of the +1.2V, +2.5V, +3.3V, +5V, +8.6V, and +12V.
- Viper does not boot.

5.8 Repair Tips

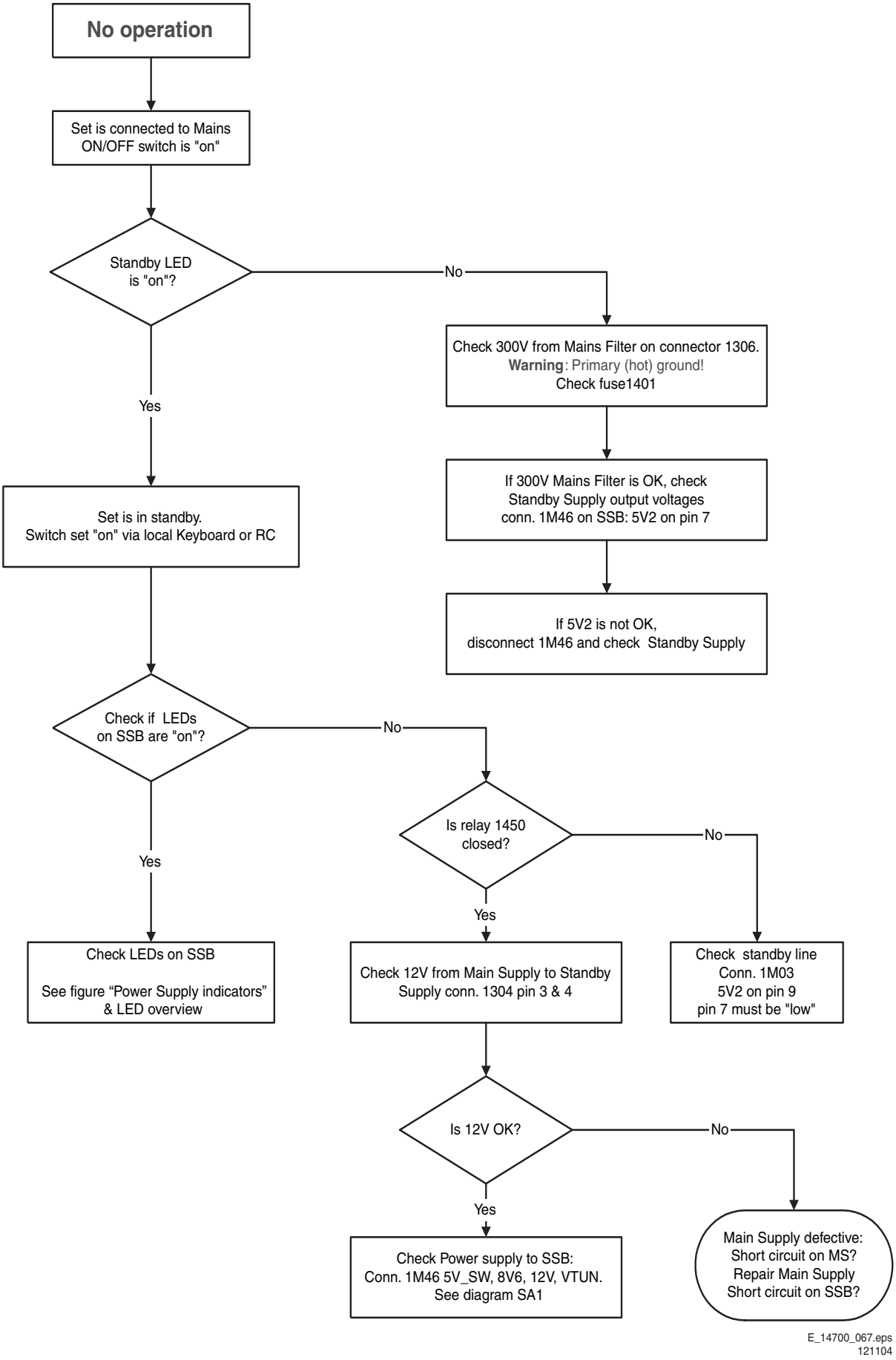

Figure 5-2 First line fault find tree

5.8.1 Power Supply

The LEDs on the SSB show the presence/absence of several voltages (see also figure “Power supply indicators”)

Table 5-2 LED overview

LED	Detected Voltage	Diagr.	Remarks
6G06	+5VDisp	B9D	Switches "on" when the display is activated.
6H00	Reset MIPS	B6A	This line is active "low" during start-up (LED="off"). After start-up conditions are met, the LED switches "on".
6T06	Visual check	B3	Switches "off" in case of SECAM L/L' reception (this line selects the correct SAW filter).
6T07	VTUN1	B3	Indicates if the 33 V tuner voltage is present.
6U19	+V5D	B1	Indicates if the 5VD voltage is present.
6U20	+3V3	B1	Indicates if the 3V3 voltage is present.
6U21	+2V5	B1	Indicates if the 2V5 voltage is present.
6U22	+1V2	B1	Indicates if the 1V2 voltage is present.

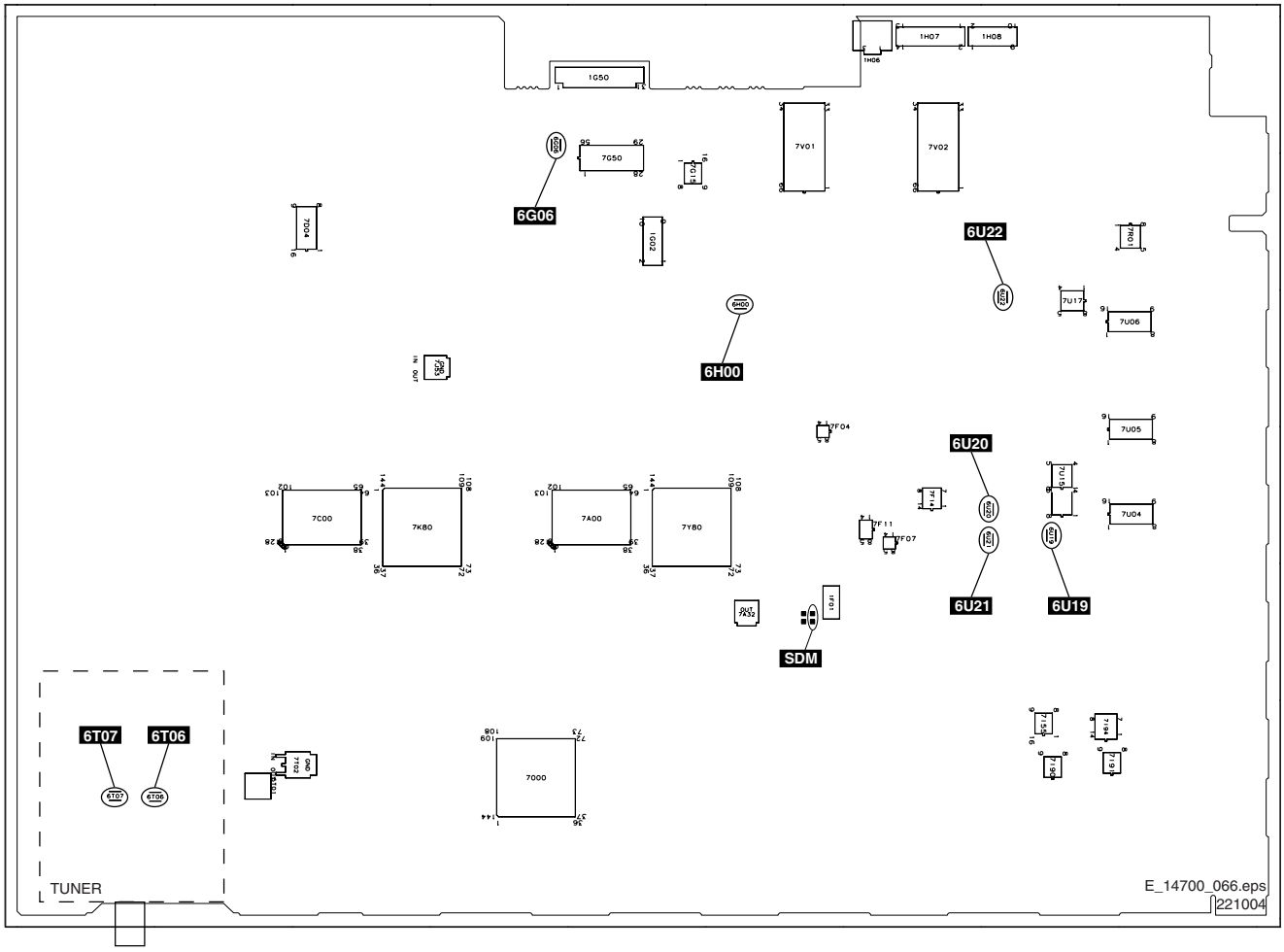

Figure 5-3 Power supply indicators

Brief description of the succession of the supply voltages availability on the SSB:

When (conditions)			Then (should be available)
+5V2= +5.2V			+2V5D (to supply DDRAM)
+12VS= +12V **+5V2**= +5.2V	12V_SWITCH=low and +5V=5V		+12VSW
		ENABLE-1V2= low	+1V2
		ENABLE-2V5= low	+2V5 & +2V8
		ENABLE-3V3= low	+3V3
		All enabled	SUPPLY_FAULT = high

In case of a wrong value of the output voltages (or no output voltages) check:
- The value of signals 12V_SWITCH, ENABLE_1V2, ENABLE_2V5, ENABLE_3V3 and SUPPLY_FAULT and the availability of +5V.
- The value of +12VSW and the supply voltages for the IC controllers (pin 9, about +12 V).
- The switching frequency (250 kHz) and duty cycle of each DC/DC converter.
- Short-circuits to GND of output voltages.
- Missing or incorrect value of components.

The values of the supply voltages and their ramp-up times:

Name	Value and tolerance	Ramp-up time
+1V2	1.26 V ±4%	6 ms ±3 ms
+2V5	2.6 V ±5%	4 ms ±2 ms
+2V5D	2.6 V ±5%	4 ms ±2 ms
+2V8	2.95 V ±10%	4 ms ±2 ms
+3V3	3.38 V ±5%	4 ms ±2 ms

5.8.2 MPIF

Important things to make the MPIF work:
- Supply of 5 V.
- Clock signal of 13.5 MHz from the AVIP.
- I^2C from the VIPER.

5.8.3 AVIP

Important things to make AVIP operational.
- Supply 1.8 V and 3.3 V for video.
- Supply 3V3-AUD, 5V-AUD, and 8V-AUD for audio.
- Reset pulse (RESET_MIPS) from VIPER (visible via LED 6H00).
- Clock 13.5 MHz from VIPER.
- I^2C from VIPER.

5.9 Software Upgrading

In this chassis, you can **upgrade** the main software via a USB stick or memory card.

5.9.1 Introduction

It is possible **for the user** to upgrade the **main** software via the USB port. This allows replacement of a software image in a standalone set, without the need of an E-JTAG debugger. A description on how to upgrade the software can be found in chapter 3 "Directions For Use".

The set software is stored in a 128 Mbit (16 MB) NAND-Flash, which is connected to the VIPER via the PCI bus.
The NAND-Flash used is a TC58DVM72F1TG10. It is a serial-type memory device, which utilises the I/O pins for both address and data input/output as well as for command inputs. The Erase and Program operations are automatically executed. To access the data in the NAND-flash, three Octal Bus Transceiver circuits are used (74LVC245).

5.9.2 Procedure

The software image resides in the NAND-Flash, and is formatted in the following way:

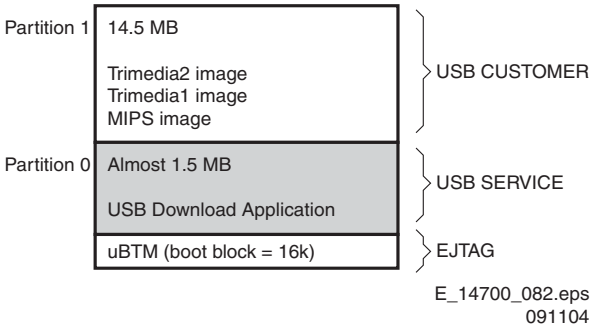

Figure 5-4 NAND-Flash format

Executables are stored as files in a file system. The boot loader (uBTM) will load the USB Download Application in partition 0 (USB drivers, bootscript, etc). This application makes it then possible to upgrade the main software via USB.

Software can be upgraded in two ways:
- Via the USB port.
- Via an external EJTAG tool.

Installing "Partition 0" software is possible via an external EJTAG tool, but also in a special way with the USB stick (see description in paragraph “Manual Start of Software Upgrade Application“).

Programming of an **empty** NAND-Flash is only possible via an external EJTAG tool.

Software upgrade via USB
To do a software upgrade (partition 1) via USB, the set must be operational, and the "Partition 0" files for the VIPER **must** be installed in the NAND-Flash!

The new software can be uploaded to the TV by using a portable memory device or USB storage compliant devices (e.g. USB memory stick). You can download the new software from the Philips website to your PC.

Partition 0
To upgrade the USB download application (partition 0 except the bootblock), insert an USB stick with the correct software, but press the “red” button on the remote control (in ”TV” mode) when it is asked via the on screen text.

Caution:
- The USB download application will now erase **both** partitions (except the boot block), so you need to reload the main SW after upgrading the USB download application. As long as this is not done, the USB download application will start when the set is switched “on”.
- When something goes wrong during the progress of this method (e.g. voltage dip or corrupted software file), the set will not start up, and can only be recovered via the EJTAG tool!

Software upgrade via EJTAG
If the "Partition 0" software is corrupted or in case of a new (empty) NAND-Flash, the "Partition 0" software needs to be installed.
This is possible in dedicated workshops with special tools like the EJTAG probe with software, or via the procedure described below.

5.9.3 Manual Start of Software Upgrade Application

Partition 1
It is possible to **force** the TV into the software upgrade application, but normally this is not needed, as the TV will automatically detect when a memory device with upgrade software is connected.
To force the TV into the software upgrade mode:
- Disconnect the TV from the mains.
- Press the “OK” button on a Philips DVD RC-6 remote control (it is also possible to use the TV remote in “DVD” mode).
- Keep the “OK” button pressed while connecting the TV to the mains.
- The software upgrade application will start.
- When a memory device with upgrade software is connected, the upgrade process will start.

5.10 Start-up flow charts

In the following flow charts, the start-up behaviour of the chassis is described.

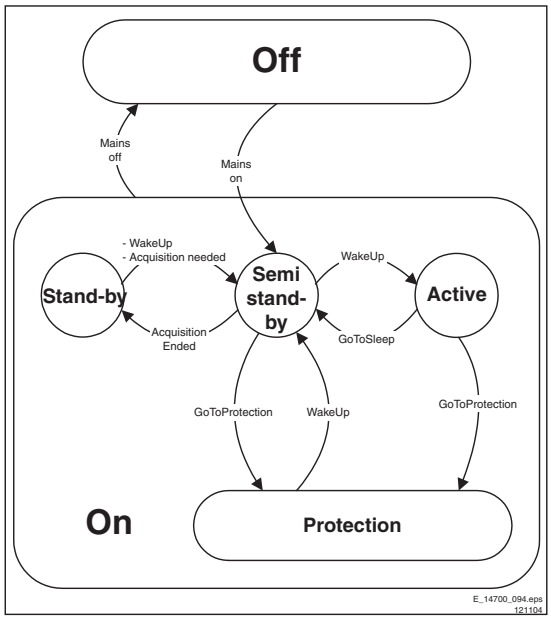

Figure 5-5 Transition diagram

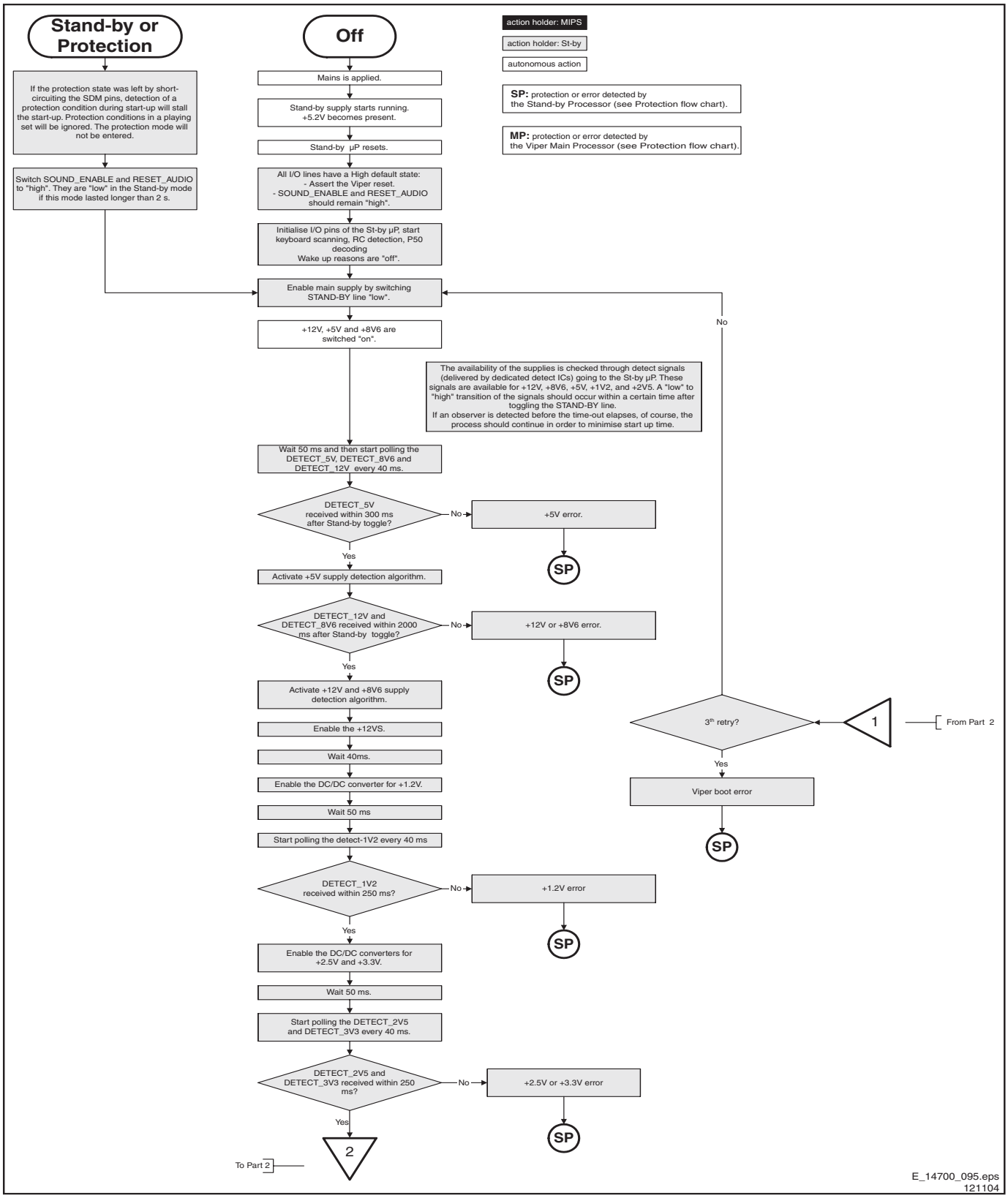

Figure 5-6 "Off" to "Semi Stand-by" flow chart (part 1)

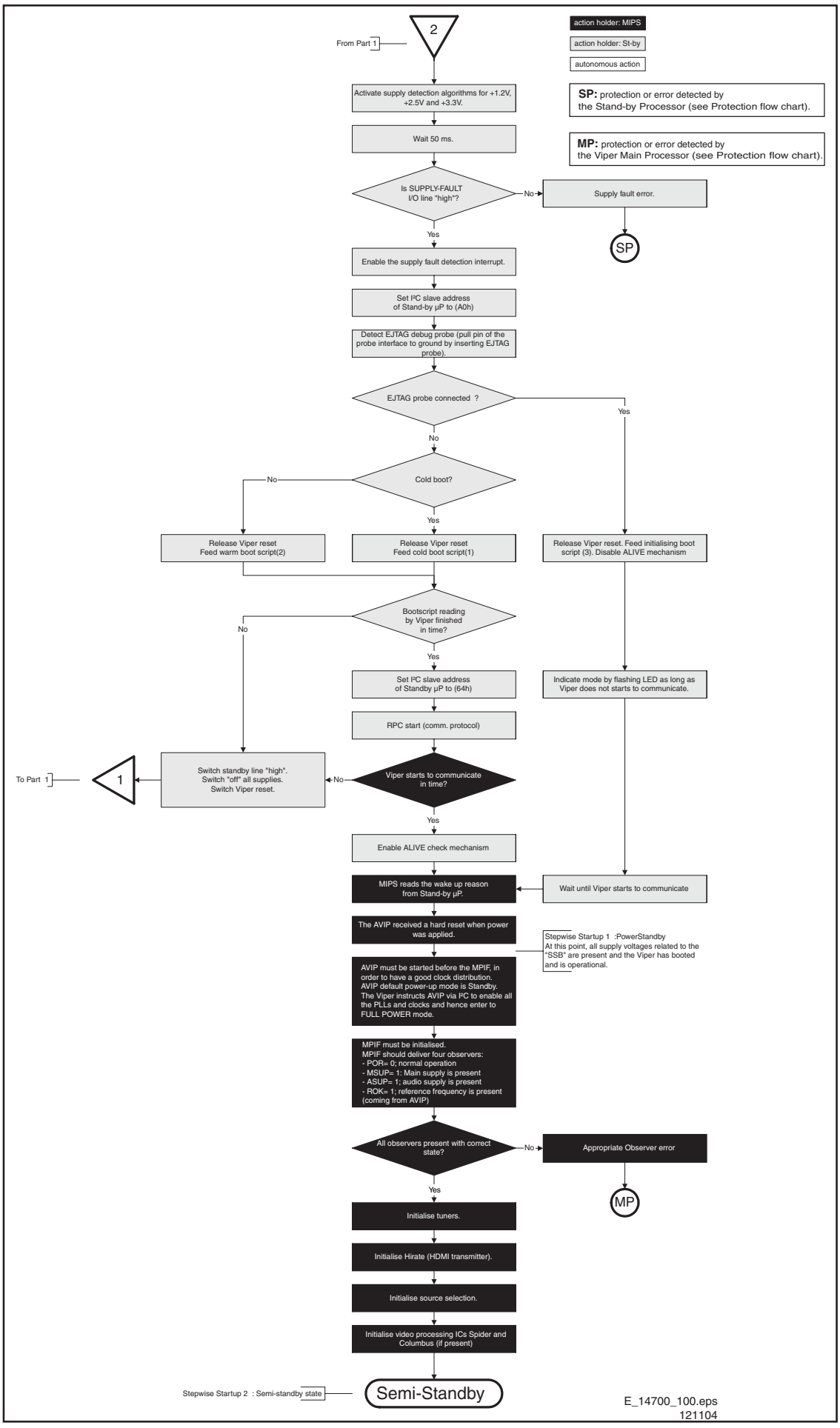

Figure 5-7 “Off” to “Semi Stand-by” flow chart (part 2)

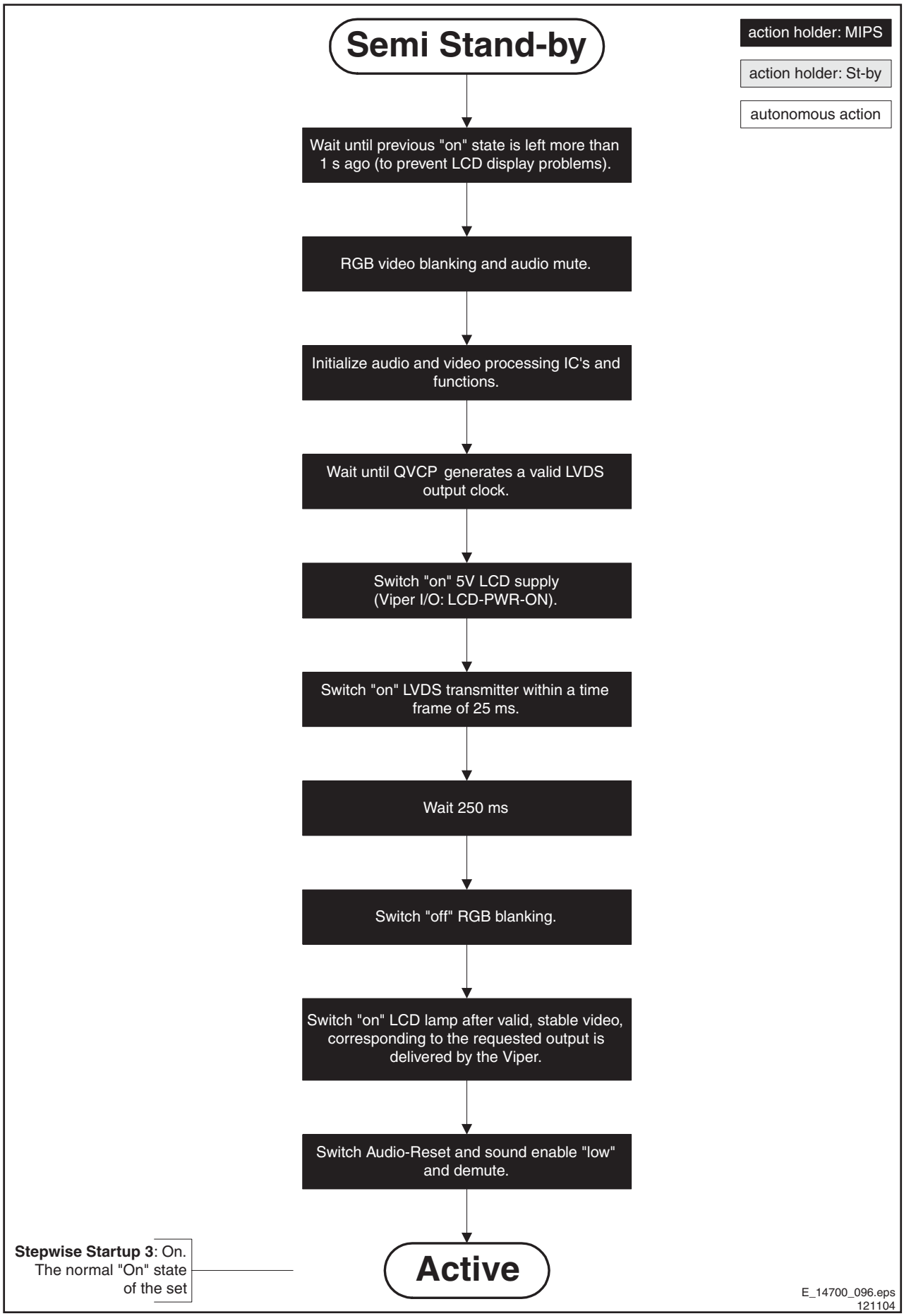

Figure 5-8 “Semi Stand-by” to “Active” flow chart

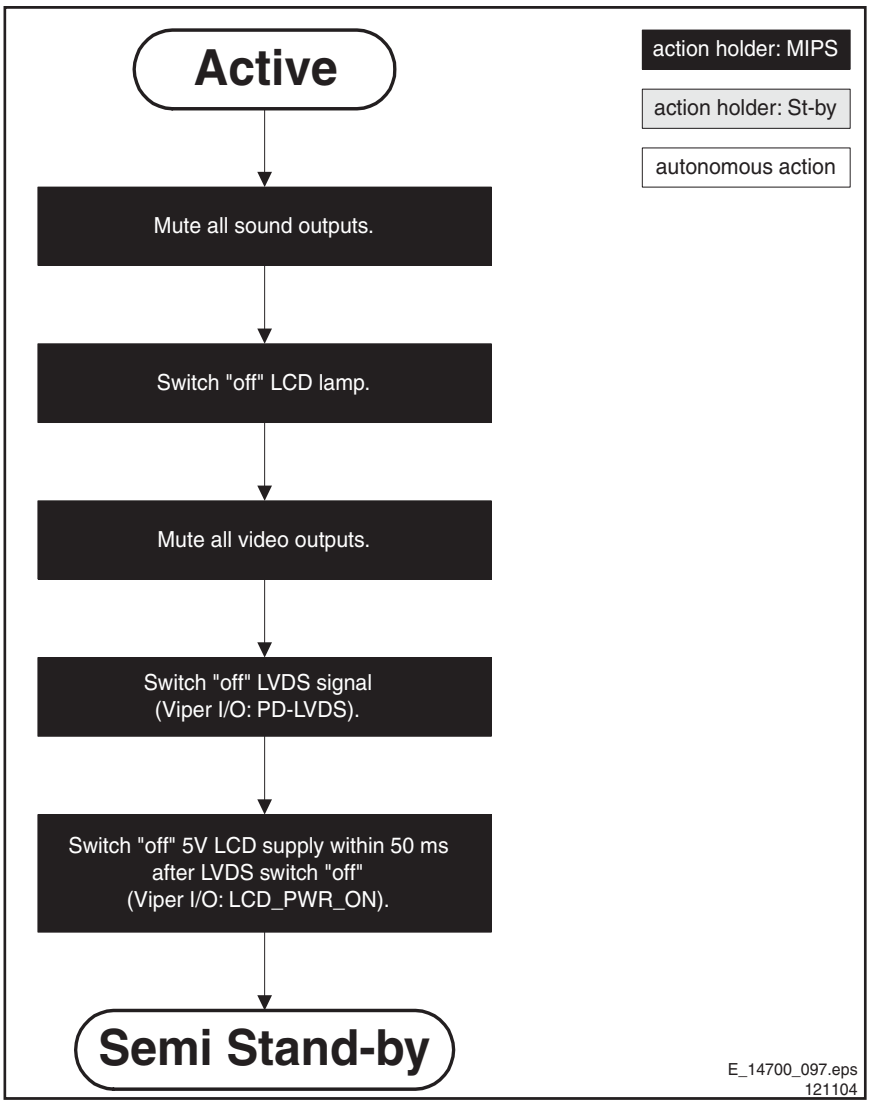

Figure 5-9 “Active” to “Semi Stand-by” flow chart

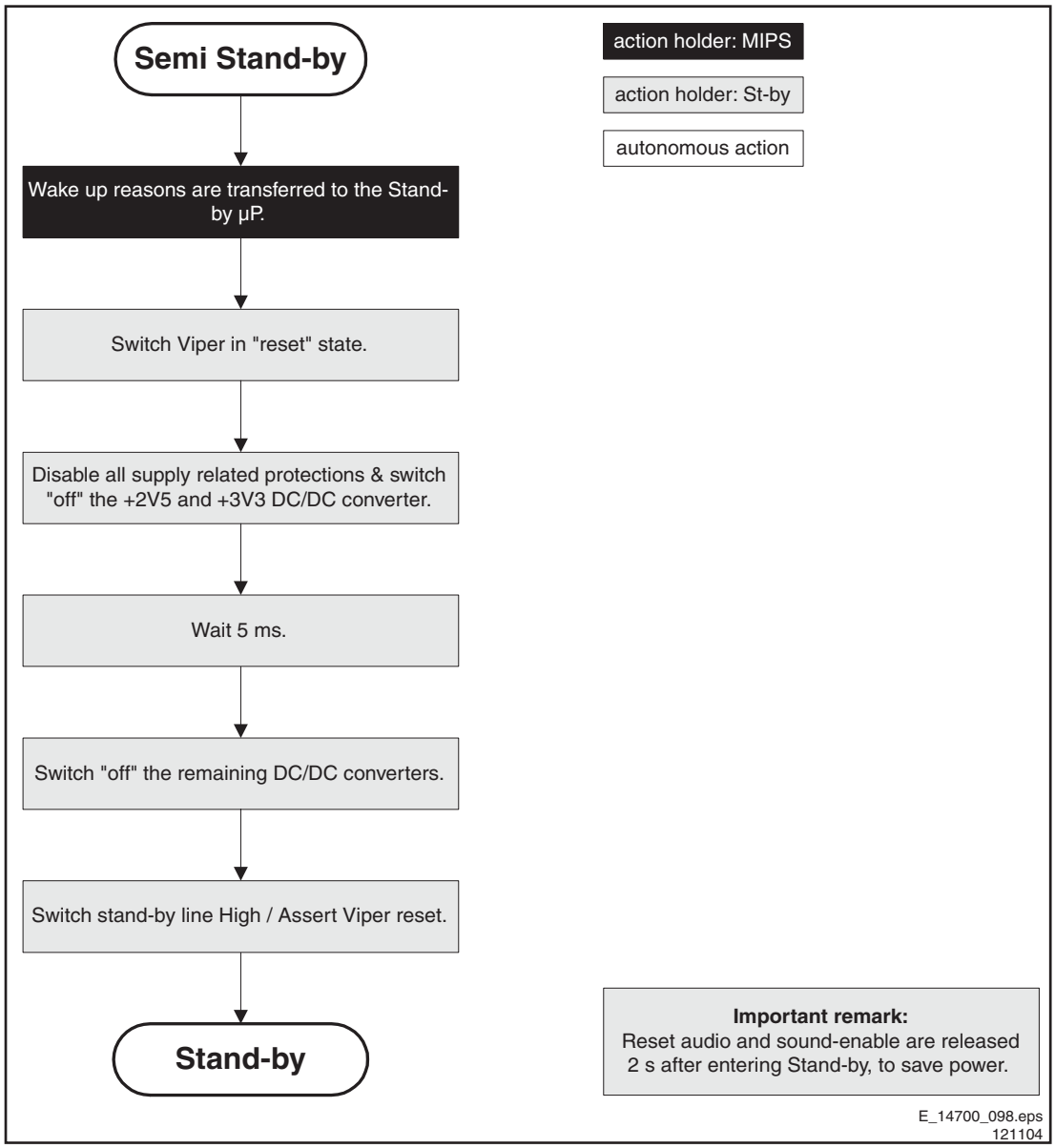

Figure 5-10 “Semi Stand-by” to “Stand-by” flow chart

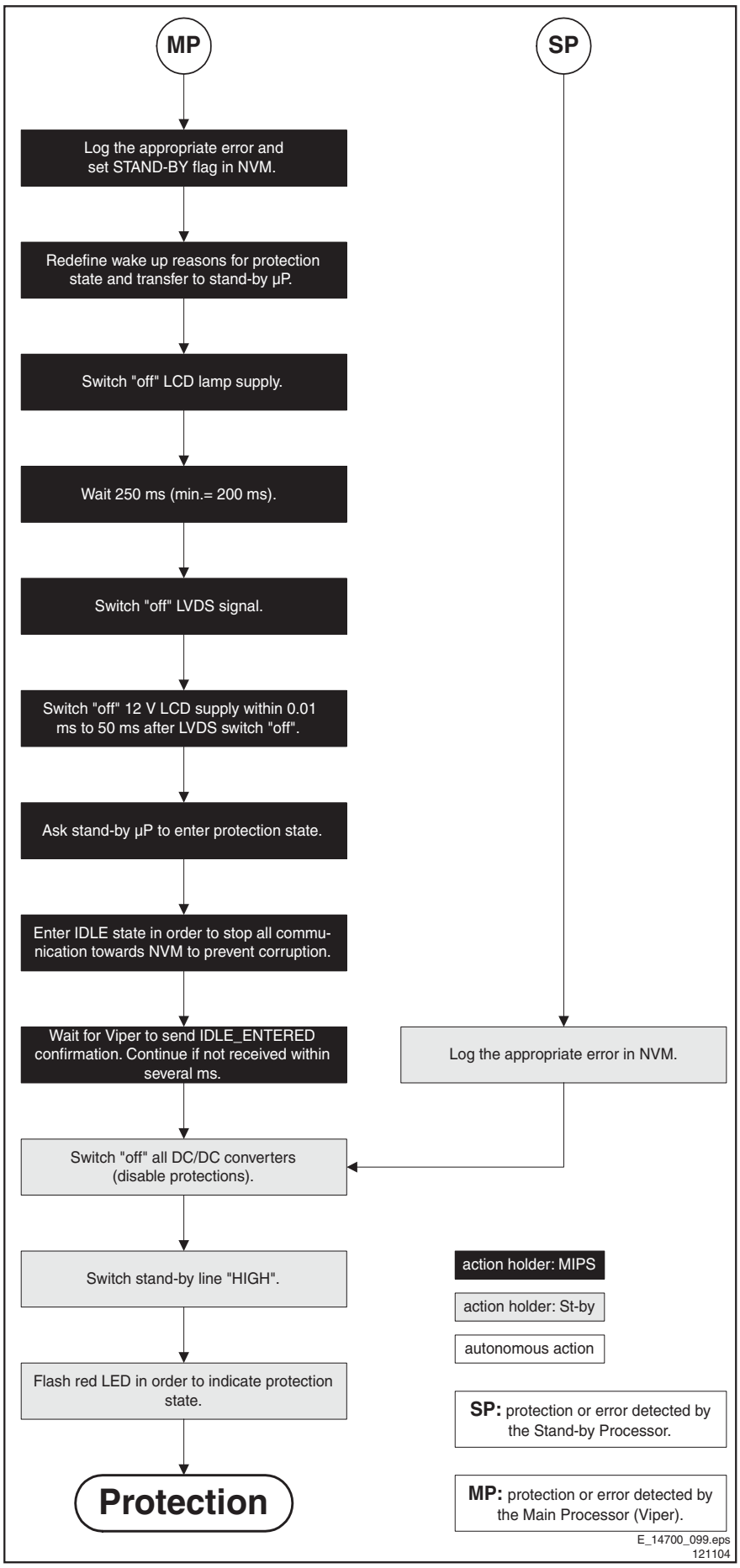

Figure 5-11 Protection flow chart

Personal Notes:

E_06532_012.eps
131004

6. Block Diagrams, Testpoint Overview, and Waveforms

Wiring Diagram 32 Inch Sharp LCD

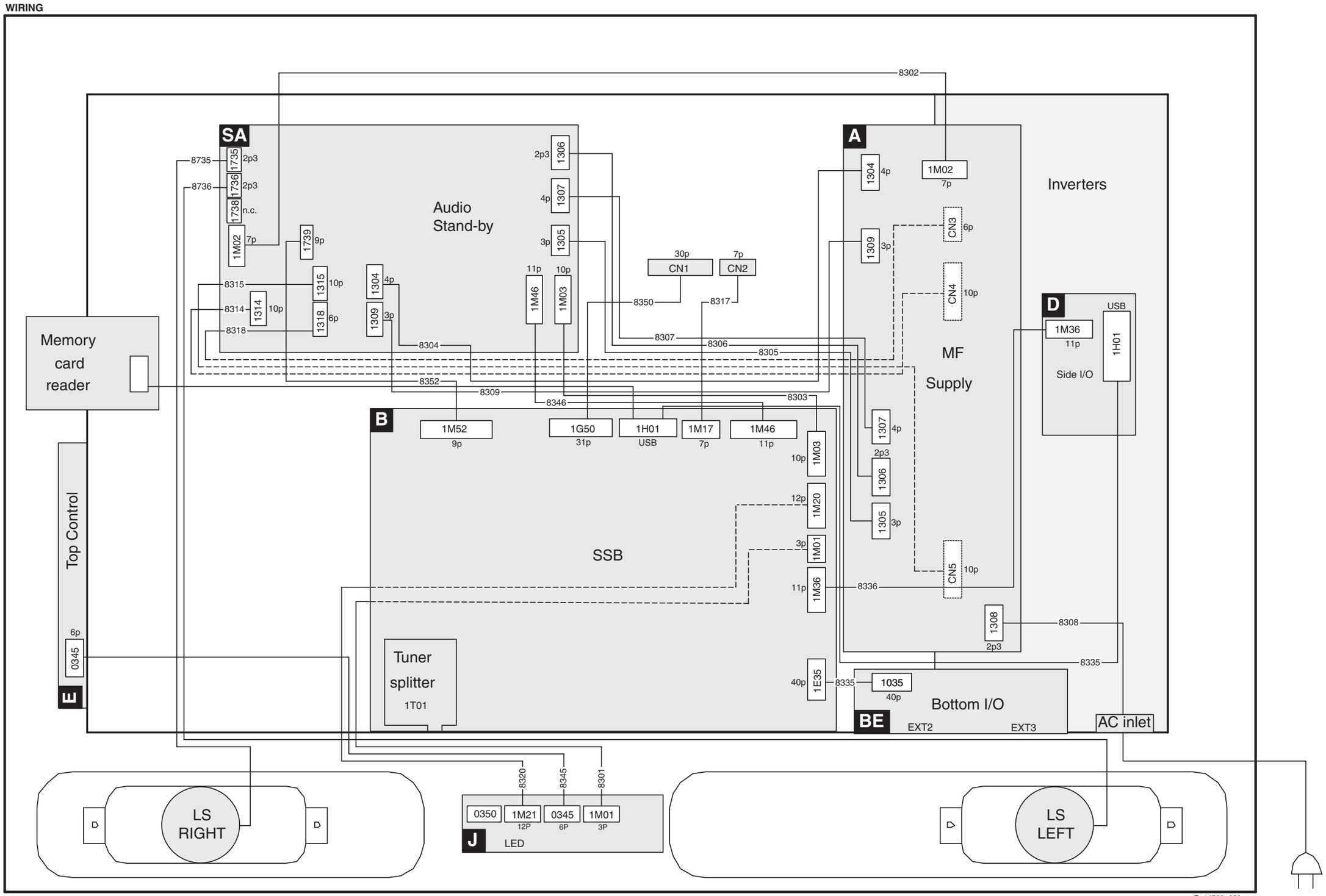

E_14700_058.eps
041004

Block Diagram Supply + Standby 32 Inch

SUPPLY + STANDBY 32"

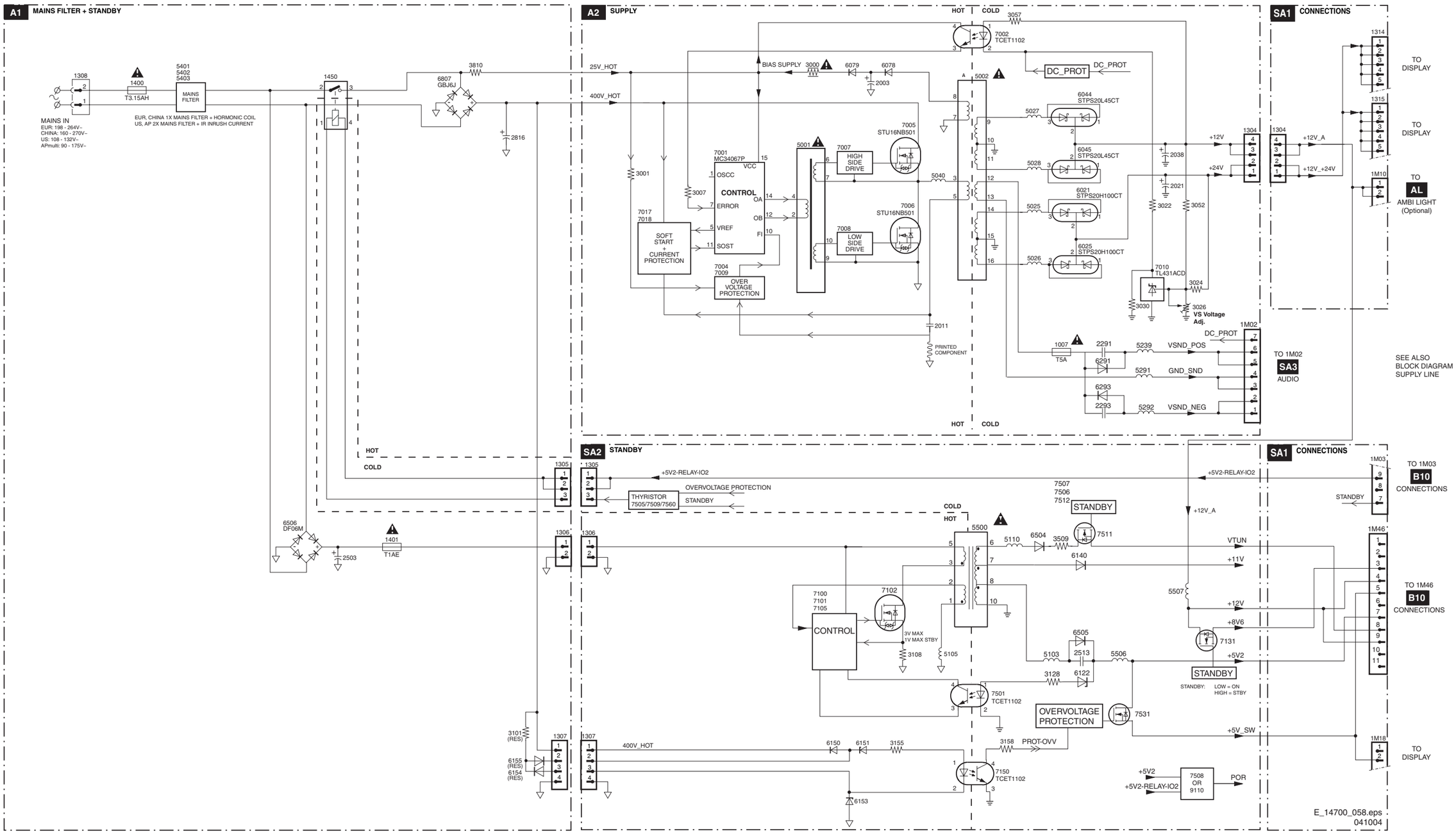

Block Diagram Video

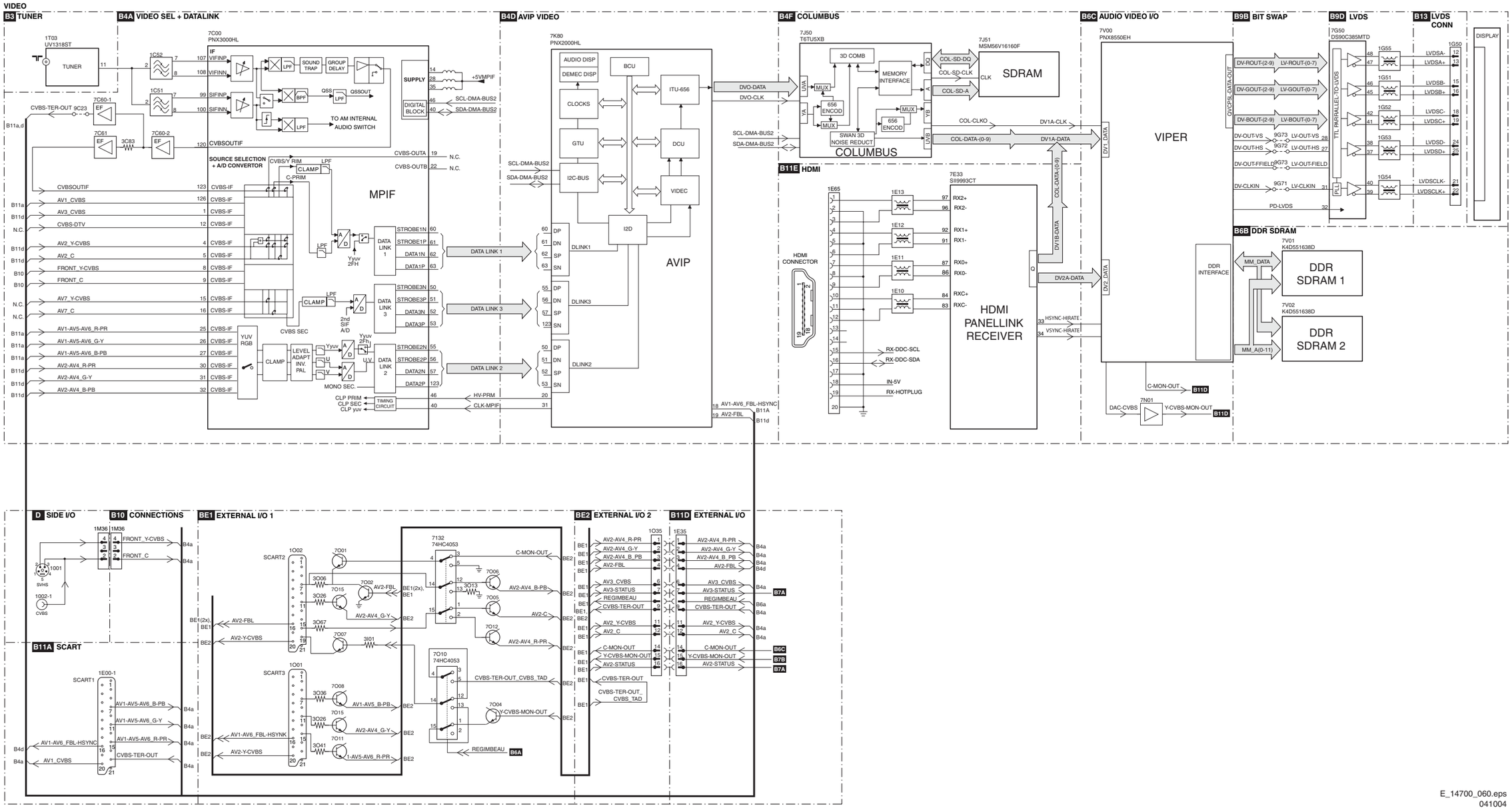

E_14700_060.eps
041004

Block Diagram Audio

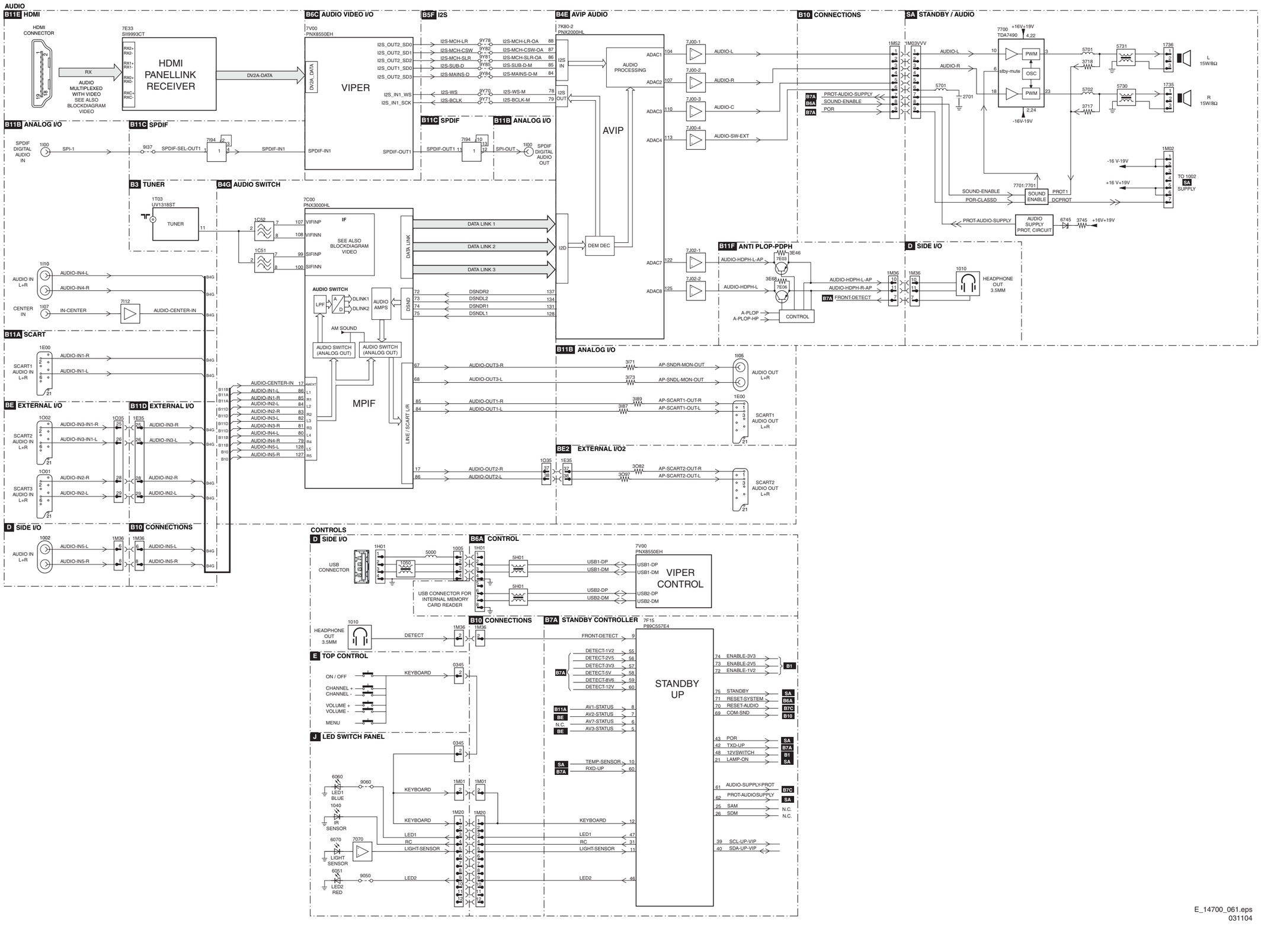

E_14700_061.eps
031104

I²C IC's overview

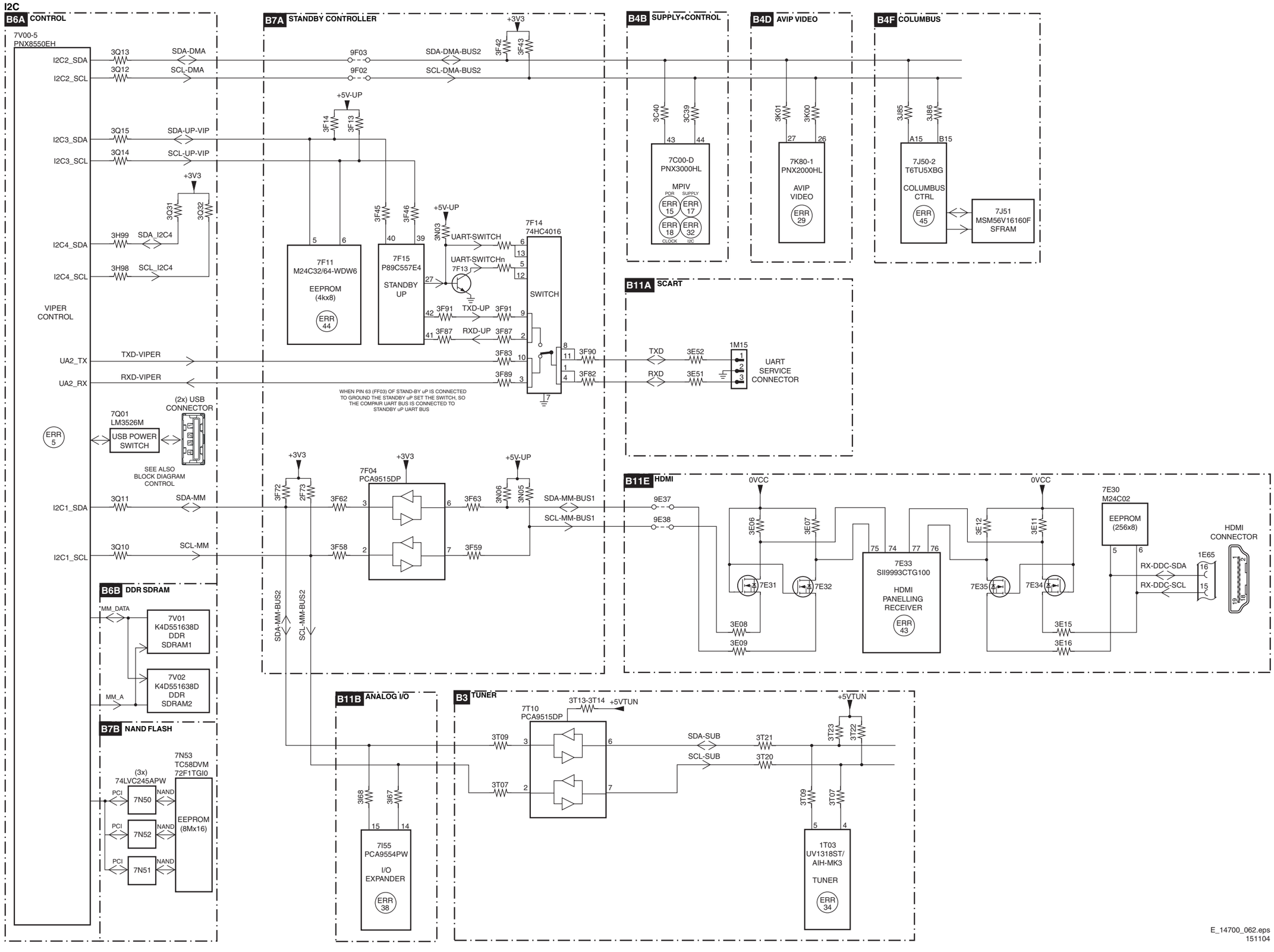

E_14700_062.eps
151104

Supply Lines Overview

SUPPLY LINES OVERVIEW

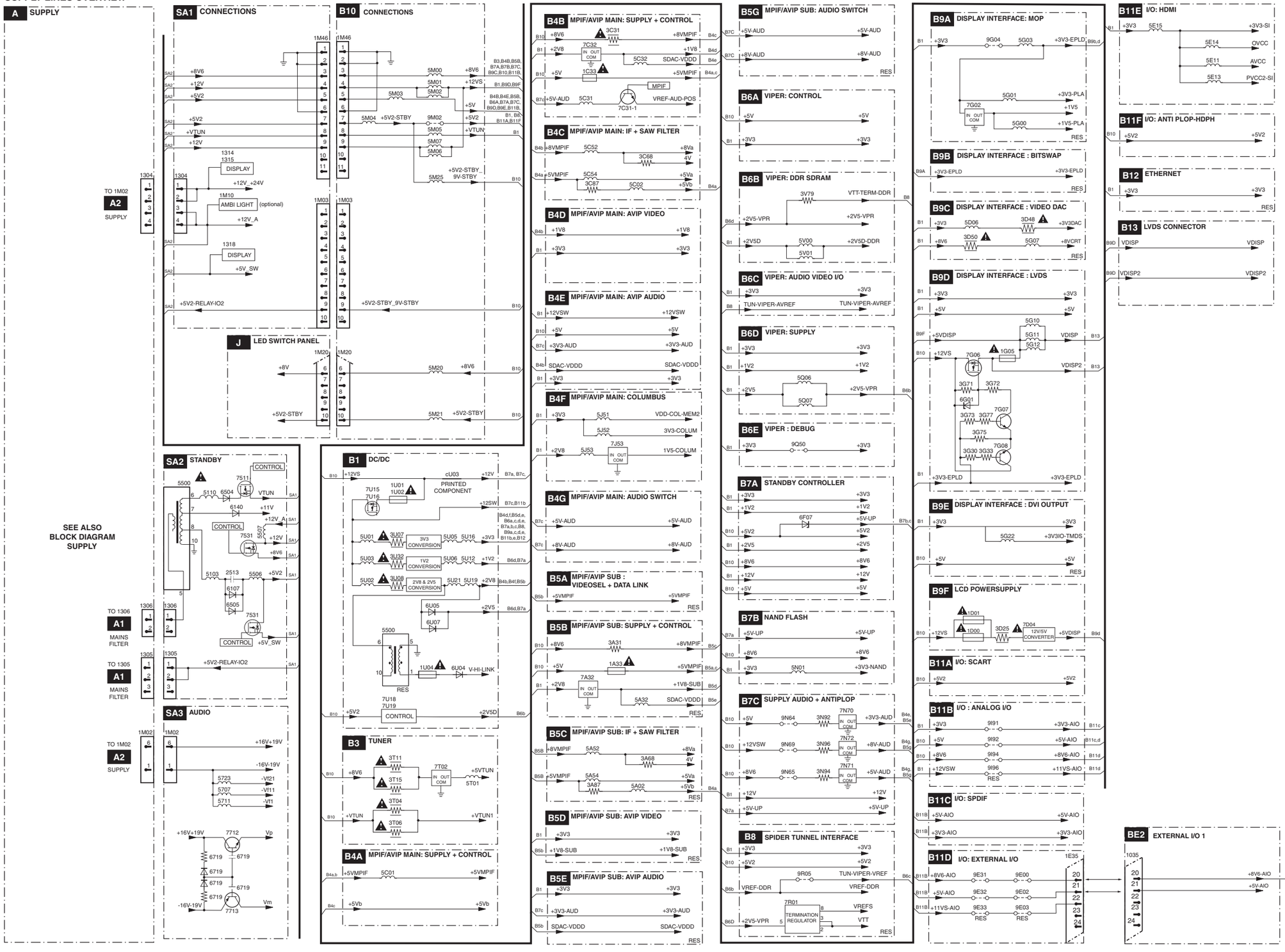

E_14700_063.eps
031104

7. Circuit Diagrams and PWB Layouts

MF Supply Unit (30-32 Inch): Mains Filter and Standby

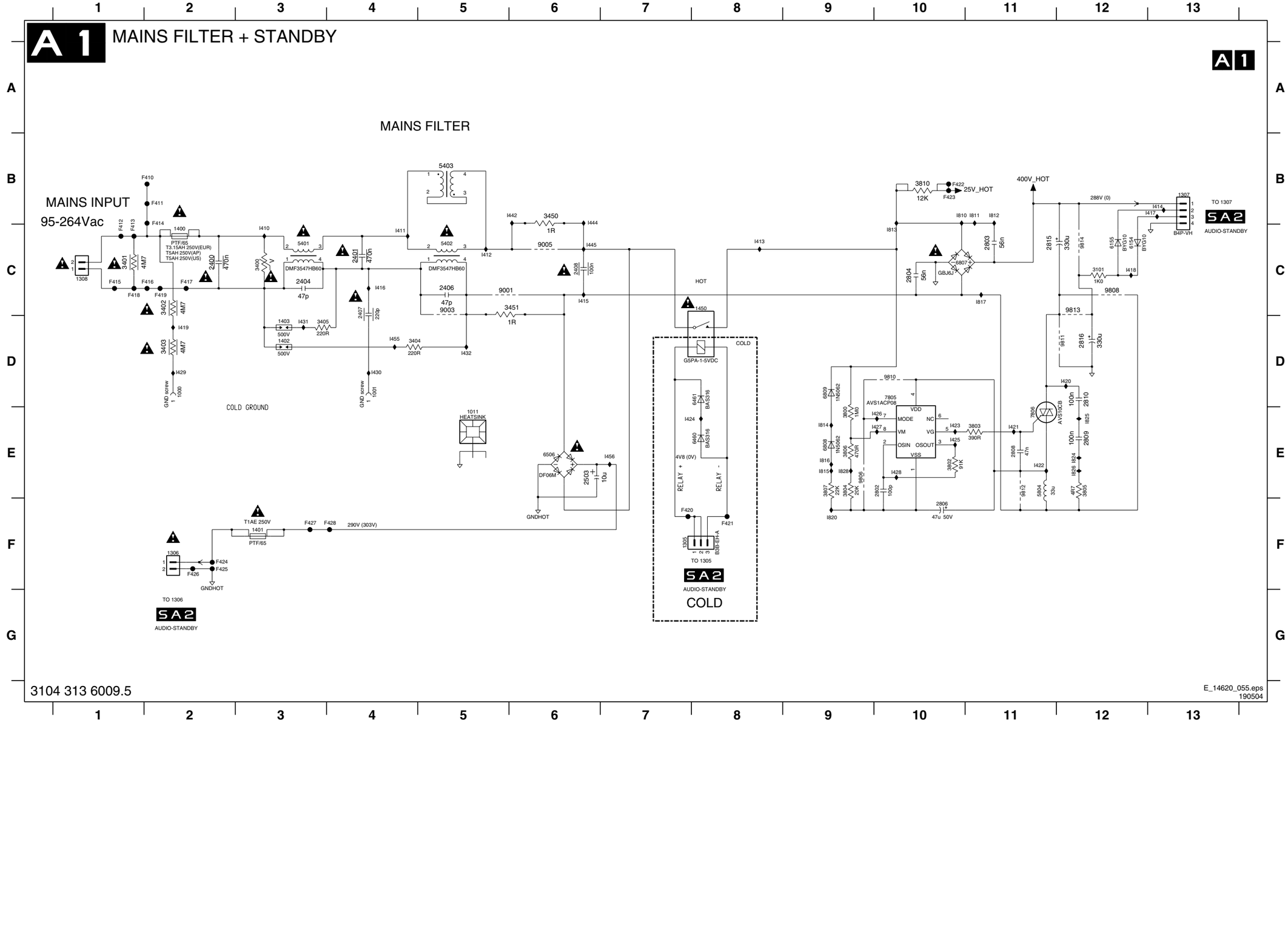

1000 D2
1001 D4
1011 E5
1305 F7
1306 F2
1307 B13
1308 C1
1400 C2
1401 F3
1402 D3
1403 D3
1450 C8
2400 C2
2401 C4
2404 C3
2406 C5
2407 C4
2408 C6
2503 E6
2802 E10
2803 C11
2804 C10
2806 F10
2808 E11
2809 E12
2810 D12
2815 C11
2816 D12
3101 C12
3400 C3
3401 C1
3402 C2
3403 D2
3404 D4
3405 D3
3450 B6
3451 C6
3800 E9
3802 E10
3803 E11
3804 E9
3805 E12
3806 E9
3807 E9
3810 B10
5401 C3
5402 C5
5403 B5
5804 E11
6154 C12
6155 C12
6460 E8
6461 D8
6506 E6
6807 C10
6808 E9
6809 D9
7805 D10
7806 E11
9001 C5
9003 C5
9005 C6
9806 E9
9808 C12
9810 D10
9811 D12
9812 E11
9813 C12
9814 C12
F410 B2
F411 B2
F412 C1
F413 C1
F414 C2
F415 C1
F416 C2
F417 C2
F418 C1
F419 C2
F420 F7
F421 F8
F422 B10
F423 B10
F424 F2
F425 F2
F426 F2
F427 F3
F428 F4
I410 C3
I411 C4
I412 C5
I413 C8
I414 B13
I415 C6
I416 C4
I417 B13
I418 C12
I419 D2
I420 D12
I421 E11
I422 E11
I423 E10
I424 E7
I425 E10
I426 E10
I427 E10
I428 E10
I429 D2
I430 D4
I431 D3
I432 D5
I442 B6
I444 B6
I445 C6
I455 D4
I456 E7
I810 B10
I811 B11
I812 B11
I813 C10
I814 E9
I815 E9
I816 E9
I817 C11
I820 F9
I824 E12
I825 E12
I826 E12
I828 E9

MF Supply Unit (30-32 Inch): Supply

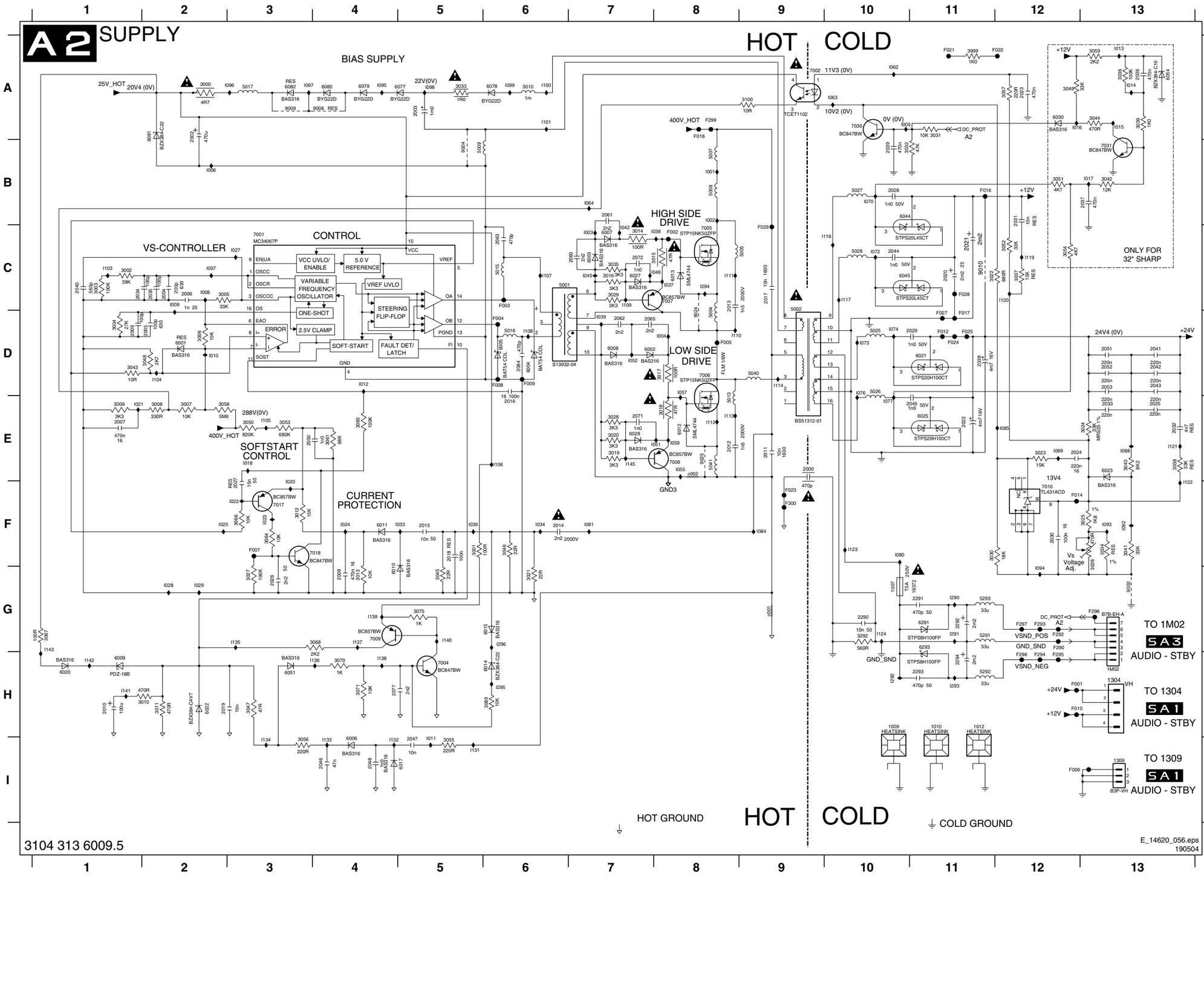

1007 G10	3043 D1	F010 H12	I137 G4
1009 H10	3044 A13	F012 D11	I138 H4
1010 H11	3045 G5	F014 F12	I139 G4
1012 H11	3046 F6	F016 B11	I140 G5
1304 H13	3047 H3	F017 D11	I141 H1
1309 I13	3048 D2	F018 A8	I142 H1
1M02 H13	3049 A12	F021 A11	I143 G1
2000 E9	3050 E3	F022 A12	I145 E7
2002 A2	3051 B12	F023 F9	I290 G11
2003 A5	3052 C12	F024 D11	I291 G11
2004 C2	3053 E3	F025 D11	I292 H10
2005 D2	3054 C12	F027 D11	I293 H11
2006 C2	3055 I5	F028 C11	I294 C8
2007 E1	3056 I3	F029 C9	I295 H6
2008 G4	3057 A12	F290 G12	I296 G6
2009 D1	3058 E2	F292 G12	c001 G9
2010 H1	3059 A13	F293 G12	c002 E8
2011 E9	3061 E4	F294 H12	
2012 E8	3064 F3	F295 H12	
2013 C8	3065 E4	F296 G13	
2014 F6	3066 F3	F297 G12	
2015 F5	3067 G1	F298 H12	
2016 E6	3068 G4	F299 A8	
2017 C9	3070 H4	F300 F9	
2018 F5	3071 H4	I001 B8	
2019 H2	3075 G5	I002 B8	
2020 C11	3089 H6	I003 C7	
2021 C11	3100 A9	I004 D8	
2022 E11	3292 G10	I005 A10	
2023 A12	3999 A11	I006 B2	
2024 E12	5001 C6	I007 C2	
2025 E13	5002 D9	I008 C2	
2026 G3	5004 D8	I009 C2	
2027 F3	5005 C9	I010 D2	
2028 B10	5007 B8	I011 I5	
2029 D11	5008 B8	I012 D4	
2030 F12	5009 B5	I013 A13	
2031 B12	5010 A6	I014 A13	
2032 E13	5013 E8	I015 A13	
2033 E13	5015 C6	I016 A12	
2034 C1	5016 D6	I017 B13	
2035 C2	5017 A3	I018 E3	
2036 A13	5025 D10	I020 F3	
2037 B13	5026 D10	I021 E1	
2038 D11	5027 B10	I022 F3	
2039 B10	5028 C10	I023 F3	
2040 C1	5040 D9	I024 F4	
2041 D13	5041 E8	I025 F2	
2042 D13	5291 G11	I027 C3	
2043 D13	5292 H11	I028 G2	
2044 C10	5293 G11	I029 G2	
2045 E11	6001 D2	I033 F5	
2046 I4	6002 D7	I034 F6	
2047 I5	6003 C7	I036 F5	
2048 I4	6004 D6	I037 C8	
2050 E3	6005 D6	I038 C8	
2051 D13	6006 I4	I039 D7	
2052 D13	6007 C7	I042 C7	
2053 D13	6008 D7	I045 C7	
2060 C7	6009 H1	I046 C8	
2061 B7	6010 G4	I051 E8	
2062 D7	6011 F4	I052 D7	
2063 C6	6012 E8	I055 E8	
2064 D6	6013 C8	I057 D8	
2065 D7	6014 H6	I059 E8	
2071 E7	6015 G6	I062 A10	
2072 C7	6017 I5	I063 A10	
2077 H4	6020 H1	I064 B7	
2290 G10	6021 D11	I070 B10	
2291 G11	6022 H2	I072 C10	
2292 G11	6023 E13	I073 D10	
2293 H11	6025 E11	I074 D10	
2294 H11	6027 C7	I076 D10	
3000 A2	6028 E7	I077 E10	
3001 F5	6030 A12	I080 F10	
3002 C1	6044 B10	I081 F7	
3003 C1	6045 C10	I084 F9	
3004 D1	6051 H3	I085 E12	
3005 C2	6054 A13	I088 E13	
3006 D2	6077 A5	I089 E12	
3007 E2	6078 A6	I092 F13	
3008 E2	6079 A4	I093 F13	
3009 E1	6080 A4	I094 G12	
3010 H2	6081 A2	I095 A4	
3011 H2	6082 A3	I096 A3	
3012 F3	6291 G11	I097 A3	
3013 G4	6293 G11	I098 A5	
3014 C7	7001 C3	I099 A6	
3015 C8	7002 A9	I100 A6	
3016 C7	7004 H5	I101 A6	
3017 D8	7005 C8	I103 C1	
3018 E8	7006 D8	I104 D2	
3019 E7	7007 C8	I105 E3	
3020 E7	7008 E8	I106 E6	
3021 G6	7009 G4	I107 C6	
3022 C11	7010 F12	I108 D6	
3023 E12	7017 F3	I109 C7	
3024 E13	7018 F3	I110 D8	
3025 F13	7030 A10	I111 C8	
3026 G13	7031 B13	I112 E8	
3027 G3	9002 G13	I113 E8	
3028 E7	9004 B5	I114 D9	
3029 C7	9008 A4	I116 C10	
3030 F11	9009 A3	I117 C10	
3031 A11	9010 C11	I119 C12	
3032 B10	9024 D8	I120 C12	
3033 A5	9025 E8	I121 E13	
3034 F13	F001 H12	I122 F13	
3035 C7	F002 C8	I123 F10	
3036 A13	F003 C6	I124 G10	
3037 C12	F004 D6	I131 I5	
3038 E13	F005 D8	I132 I4	
3039 A13	F006 I12	I133 I4	
3040 E13	F007 F3	I134 I3	
3041 F13	F008 D6	I135 G3	
3042 B13	F009 D6	I136 H4	

Layout MF Supply Unit (30-32 Inch) (Top Side)

1000 A1	1304 A10	1401 A4	2003 A6	2014 A7	2294 C10	2503 A4	2816 A5	3033 A6	3403 A1	3807 B4	5008 C5	5025 B9	5292 C10	6025 B10	6808 A4	7806 C4	9010 A10	9018 A6	9025 B7	9034 A10	9041 B9	9080 A7	9092 A7	9814 A5
1001 A3	1305 A3	1402 A2	2004 A6	2017 B6	2400 C2	2803 B3	3000 A5	3050 A5	3404 A2	3810 A4	5009 B7	5026 A9	5293 B10	6044 C10	6809 A4	9001 A3	9011 A8	9019 A6	9026 C8	9035 B8	9042 B10	9081 C2	9093 A7	
1007 B10	1306 A4	1403 B1	2005 A6	2020 C8	2401 B1	2804 B4	3014 B6	3053 A5	3405 B1	5001 B6	5010 B6	5027 C9	5401 B2	6045 C10	7001 A6	9003 A3	9012 C8	9020 B7	9027 B9	9036 B9	9043 B10	9086 B10	9098 B3	
1009 B9	1307 A5	1450 A3	2010 A7	2021 C8	2404 B1	2806 B4	3015 C5	3058 A5	3450 A2	5002 A7	5013 C7	5028 C9	5402 A1	6291 A9	7002 A8	9004 A7	9013 B8	9021 A6	9028 B9	9037 B8	9044 C9	9087 B9	9808 B5	
1010 C9	1308 C1	1M02 B10	2011 B7	2022 A8	2406 A3	2809 C4	3017 C7	3400 C2	3451 A3	5004 C6	5040 B6	5403 A3	6293 A10	7005 C6	9005 B3	9014 B1	9022 C3	9031 A9	9038 A9	9045 C9	9088 A10	9811 B5		
1011 C3	1309 A8	2000 A7	2012 C7	2038 A9	2407 A3	2810 C4	3018 C7	3401 A1	3800 A4	5005 C6	5041 C7	5804 B4	6506 A4	7006 C7	9006 C10	9016 A7	9023 C3	9032 A9	9039 A9	9046 C9	9090 A10	9812 B4		
1012 A9	1400 C1	2002 A7	2013 C6	2292 A10	2408 B3	2815 A3	3026 A9	3402 A1	3805 C4	5007 B6	5017 A5	5291 B10	6021 B9	6807 C3	7805 B4	9007 A8	9017 A5	9024 C6	9033 A9	9040 B9	9047 C10	9091 A9	9813 B5	

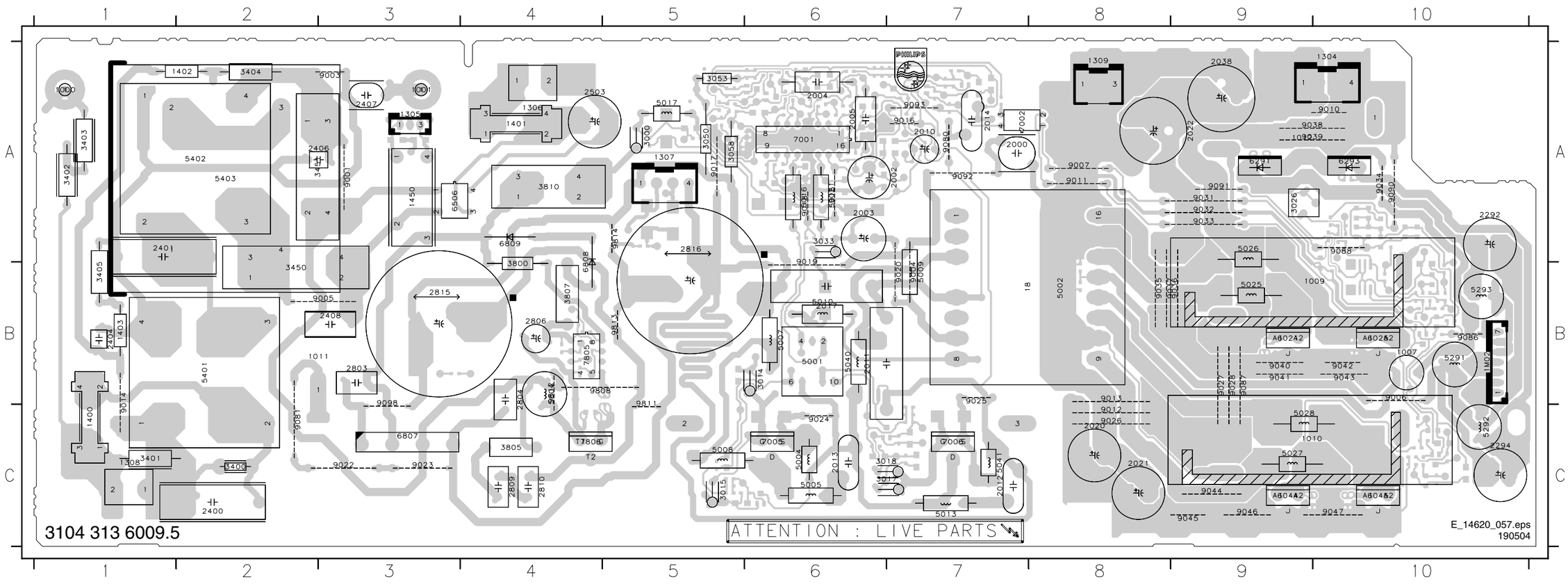

3104 313 6009.5

E_14620_057.eps
190504

Layout MF Supply Unit (30-32 Inch) (Overview Bottom Side)

2006	A5	2018	A5	2027	A6	2033	A1	2040	A5	2046	A4	2053	A1	2065	C4	2293	A1	3004	A5	3010	A4	3020	C4	3027	A6	3034	B1	3040	B1	3046	A4	3054	C1	3064	A5	3071	A4	3802	B7	6002	C4	6008	C5	6014	A4	6027	C6	6078	B5	6155	A6	7009	A4	9002	B1	9810	B7
2007	A6	2019	A5	2028	C2	2034	A5	2041	A1	2047	A5	2060	C6	2071	C4	2802	B7	3005	A5	3011	A5	3021	A4	3028	C4	3035	C6	3041	B1	3047	A4	3055	A4	3065	A6	3075	A4	3803	B6	6003	C6	6009	A4	6015	A4	6028	C4	6079	A5	6460	A8	7010	A1	9008	A6		
2008	A5	2023	B1	2029	B2	2035	A5	2042	A1	2048	A5	2061	B5	2072	C5	2808	C7	3006	A5	3012	A5	3022	B1	3029	C6	3036	C1	3042	C1	3048	A5	3056	A4	3066	A5	3089	A4	3804	B7	6004	A5	6010	A5	6017	A5	6030	C1	6080	A6	6461	A8	7017	A5	9009	A6		
2009	A5	2024	B1	2030	B1	2036	C1	2043	A1	2050	A5	2062	C5	2077	A4	3001	A4	3007	A6	3013	A5	3023	B1	3030	B1	3037	A1	3043	A5	3049	C1	3057	A1	3067	A4	3100	A4	3806	B7	6005	A5	6011	A5	6020	A4	6051	A4	6081	A4	7004	A4	7018	A6	9030	A1		
2015	A5	2025	A1	2031	A1	2037	C1	2044	C1	2051	A1	2063	A5	2290	B3	3002	A5	3008	A6	3016	C6	3024	A1	3031	B1	3038	B1	3044	C1	3051	C1	3059	C1	3068	A4	3101	A6	3999	B8	6006	A5	6012	B4	6022	A5	6054	C1	6082	A6	7007	C5	7030	B1	9085	B1		
2016	A5	2026	A6	2032	A1	2039	B1	2045	B1	2052	A1	2064	A5	2291	A2	3003	A5	3009	A6	3019	C4	3025	B1	3032	B1	3039	C1	3045	A5	3052	A1	3061	A5	3070	A4	3292	B3	6001	A5	6007	B6	6013	C5	6023	A1	6077	A5	6154	A6	7008	C5	7031	C1	9806	B7		

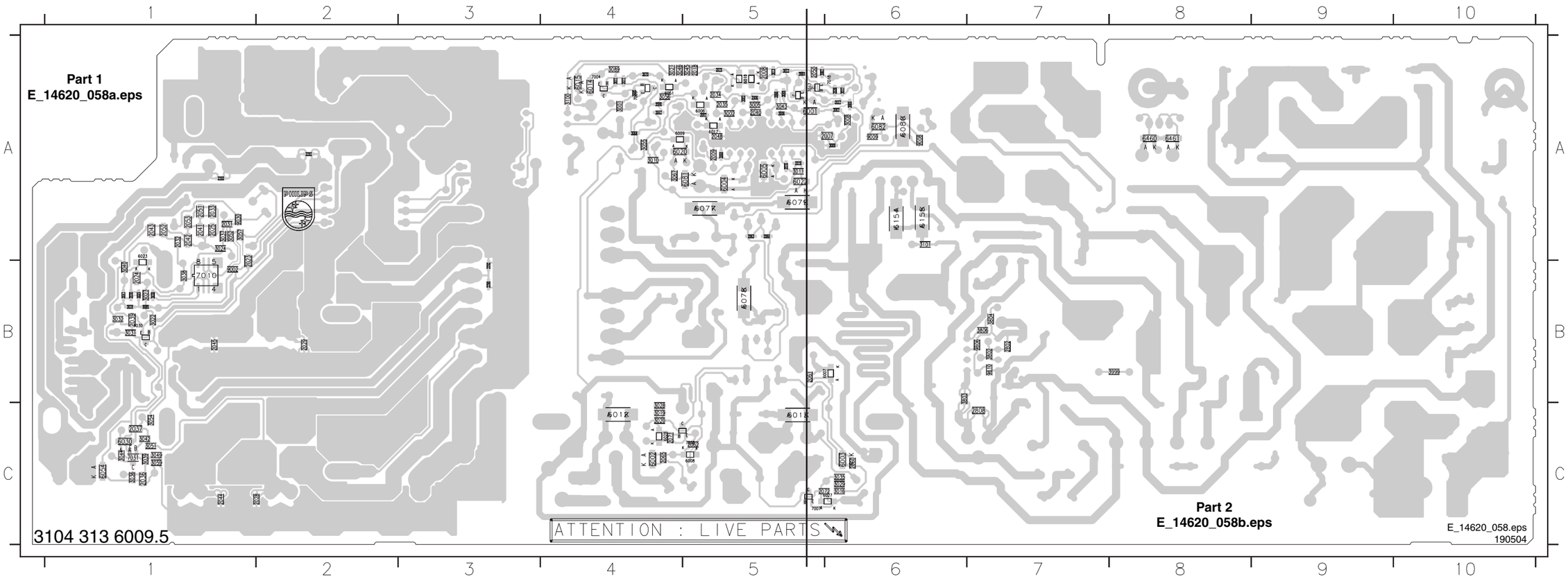

Layout MF Supply Unit (30-32 Inch) (Part 1 Bottom Side)

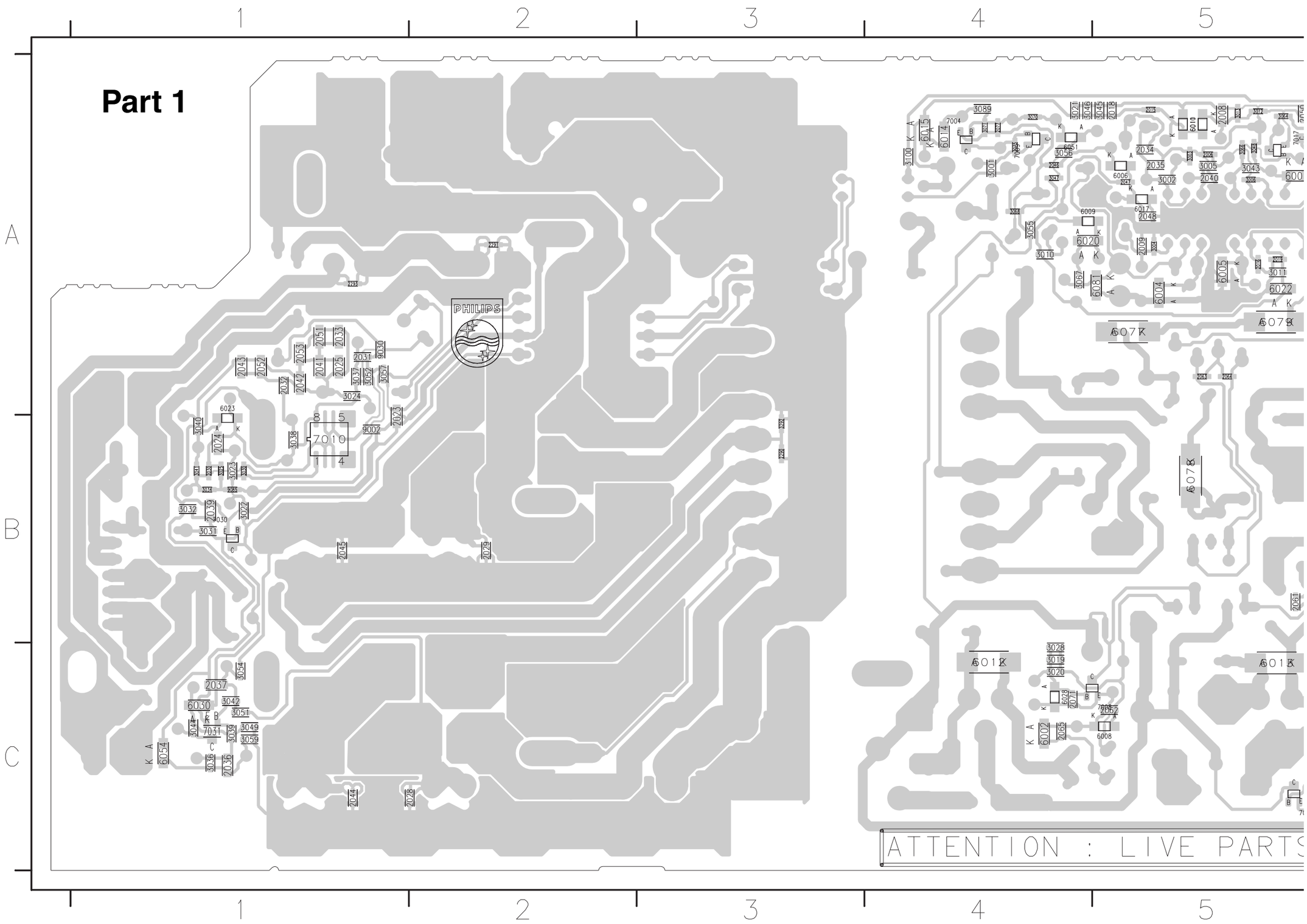

E_14620_058a.eps
190504

Layout MF Supply Unit (30-32 Inch) (Part 2 Bottom Side)

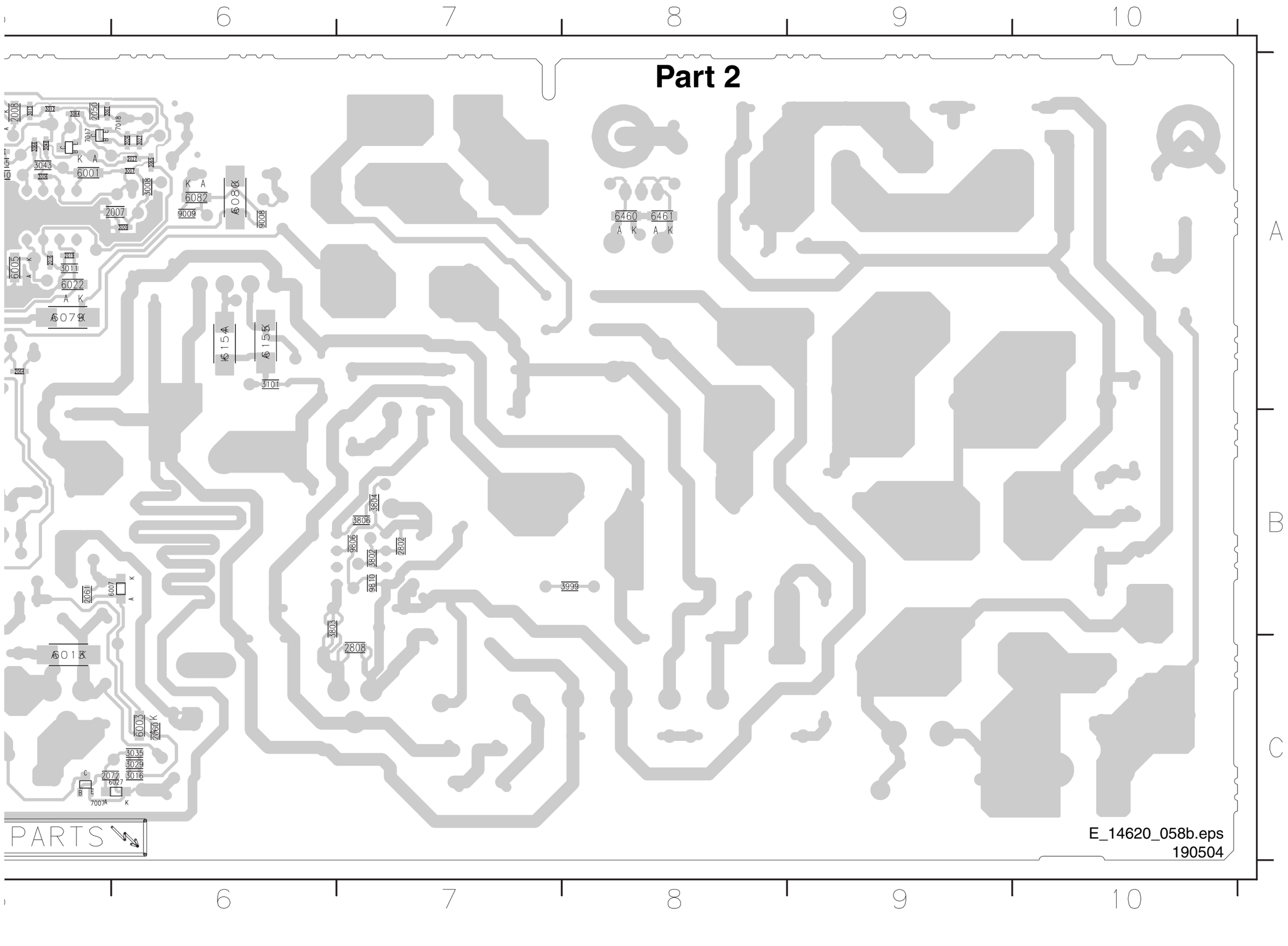

Small Signal Board: Layout Cell Overview

B0 LAYOUT CELL OVERVIEW B0

8204_000_82356 VIPER2

8204_000_82386 MOP

LVDS-OUT 8204_000_83655

MPIF-AVIP-SUB 8204_000_82376

MPIF-AVIP-MAIN 8204_000_82406

ANAI-O 8204_000_83274

8204_000_82366 FLASH

PT

SIMM

8204_000_82446

ET 8204_000_82485

DC/DC 8204_000_82476

TUN1-TUN2 8204_000_82426

TUNNEL INTERFACE 8204_000_82935

E_14700_001.eps
031104

Small Signal Board: DC/DC

1U01 B14 1U02 A14 1U04 C9 2U01 C2 2U02 D3 2U03 D1 2U04 D1 2U05 D1 2U06 C3 2U07 F3 2U08 F3
2U09 D5 2U10 C7 2U11 C7 2U12 F8 2U13 F7 2U14 D5 2U15 D5 2U16 C12 2U17 C12 2U18 D10 2U19 D10
2U20 D8 2U21 F13 2U22 D1 2U23 D5 2U24 D10 2U25 E1 2U26 E5 2U27 F10 2U28 D13 2U29 D10 2U30 F12
2U37 D4 2U38 D9 2U39 D14 2U40 H8 2U41 H8 2U42 B13 2U43 E14 2U44 E9 2U45 E4 2U46 B3 2U47 I8
2U50 B14 2U51 C9 2U52 D4 2U53 D8 2U54 D14 2U55 E4 2U56 E9 2U57 E14 2U58 B11 2U59 E15 2U60 G5
2U61 G8 2U62 C4 2U63 C1 2U66 C7 2U67 G6 2U69 C12 2U70 C13 2U71 C15 2U72 G10 2U73 D4 2U74 D4
2U75 D13 2U76 E13 2U77 D9 2U78 E9 2U79 G4 2U80 E9 2U81 E14 2U88 H6 2U90 D13 2U91 E8
2U92 E4 3U01 B1 3U02 F1 3U03 F3 3U04 F14 3U05 F3 3U06 F4 3U07 C1 3U08 C5 3U09 C6 3U10 F8
3U11 F9 3U12 F4 3U13 F4 3U14 C11 3U15 D1 3U16 F13 3U17 C2 3U18 C1 3U19 F9 3U20 C10 3U21 E1
3U22 E5 3U23 F10 3U24 H3 3U25 G10 3U26 G12 3U27 F8 3U28 F13 3U29 F8 3U30 F14 3U31 D10 3U32 C10
3U33 D5 3U34 C14 3U35 E14 3U36 I7 3U37 E4 3U38 E8 3U39 E14 3U40 E4 3U41 E8 3U42 E14 3U43 C14
3U44 B14 3U45 D3 3U46 E3 3U47 D7 3U48 E8 3U49 D12 3U50 E12 3U51 G12 3U52 B15 3U53 C15 3U54 D4
3U55 E13 3U56 E9 3U57 B12 3U58 D13 3U59 E8 3U60 E3 3U61 B3 3U62 H8 3U63 H9 3U64 H9 3U65 H9
3U66 H10 3U67 H10 3U68 H10 3U69 I10 3U70 I9 3U71 I9 3U72 G3 3U73 G4 3U74 H4 3U75 G7 3U76 G8
3U77 H7 3U78 F14 3U79 F14 3U80 E15 3U81 C12 3U82 H13 3U83 H14 3U84 H14 3U85 H12 3U86 I12
3U87 G6 3U88 H8 3U89 E10 5U01 C4 5U02 C8 5U03 C12 5U04 D8 5U05 G9 5U06 G9 5U07 H9 5U08 F4
5U09 F14 5U10 F5 5U11 F9 5U12 D14 5U13 D14 5U14 E14 5U15 F5 5U16 G5 5U17 G8 5U18 F8 5U19 F9
5U20 G5 5U21 D9 6U01 C3 6U02 C7 6U03 C12 6U04 C9 6U05 C6 6U06 C11 6U07 H11 6U08 F4 6U09 F14
6U10 F8 6U11 C14 6U12 B15 6U13 C9 6U14 C2 6U15 C6 6U16 C11 6U17 H11 6U18 C13 6U19 I13
6U20 I14 6U21 I14 6U22 H13 7U01-A D3 7U01-B E3 7U02-A D8 7U02-B E8 7U03-A D13 7U03-B E13
7U04 C5 7U06 D11 7U08-1 E5 7U08-2 G7 7U09-1 E10 7U09-2 F15 7U10-1 E1 7U10-2 G3 7U14-1 C15
7U14-2 C14 7U17 H8 7U18 I9 7U19 I10 7U20-1 B1 7U20-2 B2 9U01 F3 9U02 F8 9U03 F12 9U04 A12
9U05 A12 9U06 H9 FU01 A14 FU02 C9 FU03 D15 FU04 H7 FU05 H9 FU07 G12 FU08 G12 FU09 H12
FU10 G12 FU11 D8 FU12 D4 FU13 D12 FU14 C13 FU15 D9 IU01 B14 IU02 C13 IU03 C1 IU04 C1
IU05 C2 IU06 D3 IU07 D1 IU08 E3 IU09 D10 IU10 F6 IU11 F5 IU12 C5 IU13 C6 IU14 C10 IU15 C11
IU16 C11 IU17 D7 IU18 D12 IU19 D10 IU20 D5 IU21 E4 IU22 E14 IU23 E8 IU24 E4 IU25 E14
IU26 E8 IU27 F8 IU28 F11 IU29 F12 IU30 F6 IU31 F3 IU33 B15 IU34 C14 IU35 C14 IU36 D14
IU37 E4 IU38 F3 IU39 F8 IU40 F9 IU41 B1 IU42 E1 IU43 E5 IU44 E10 IU45 C3 IU46 C8 IU47 C12
IU48 E1 IU49 E5 IU50 E10 IU52 B1 IU53 B3 IU54 F15 IU55 F14 IU56 F8 IU57 G3 IU58 G4
IU59 H7 IU60 I9 IU61 I10 IU62 I10 IU63 I8 IU64 H12 IU65 H12 IU66 H13 IU67 H14 IU68 H14
IU69 I12 IU87 G7 IU88 H7 cU03 B15

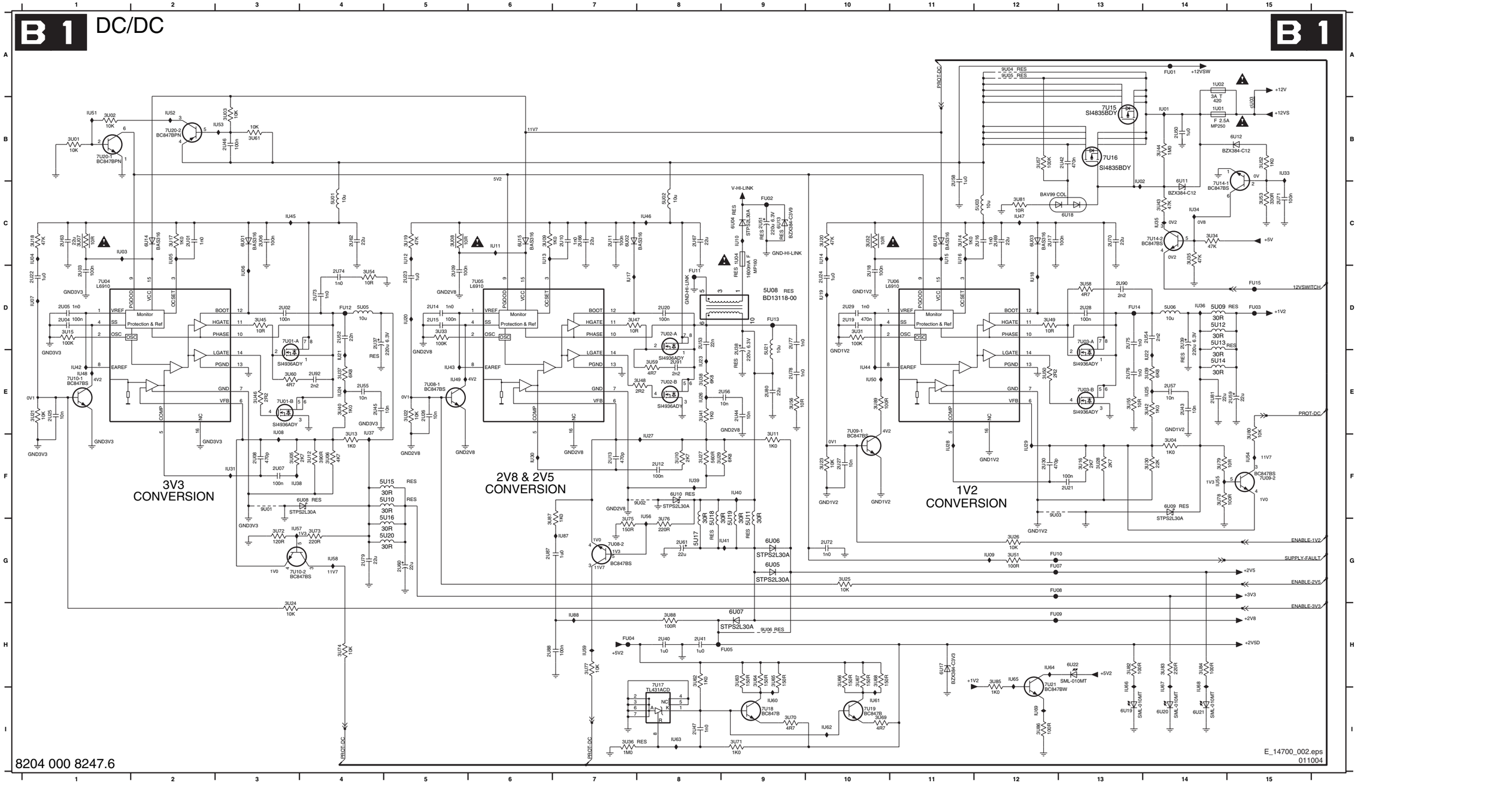

Small Signal Board: Tuner

1T02 A8	2T02 D4	2T05 C5	2T08 C2	2T11 D5	2T14 C8	2T18 A3	3T03 E9	3T06 C1	3T11 A1	3T15 A1	3T18 E3	3T21 D5	3T24 D4	6T01 C2	6T04 C8	6T07 D3	7T02 B2	7T10 D6	AT02 D10	FT03 C8	IT01 A2	IT04 C8
1T03 A5	2T03 C8	2T06 C9	2T09 E7	2T12 A1	2T15 C9	3T01 A2	3T04 B1	3T07 E6	3T13 E7	3T16 D2	3T19 E3	3T22 D7	3T25 C8	6T02 C4	6T05 C8	6T08 E7	7T03 E2	9T01 E2	FT01 C2	FT04 C5	IT02 A2	IT05 D4
2T01 C2	2T04 C6	2T07 C9	2T10 C7	2T13 C7	2T16 C9	3T02 A2	3T05 E9	3T09 E6	3T14 D7	3T17 D3	3T20 D5	3T23 D7	5T01 A3	6T03 D4	6T06 D2	7T01 B2	7T04 E3	AT01 D7	FT02 C5	FT05 A3	IT03 A3	IT06 E7

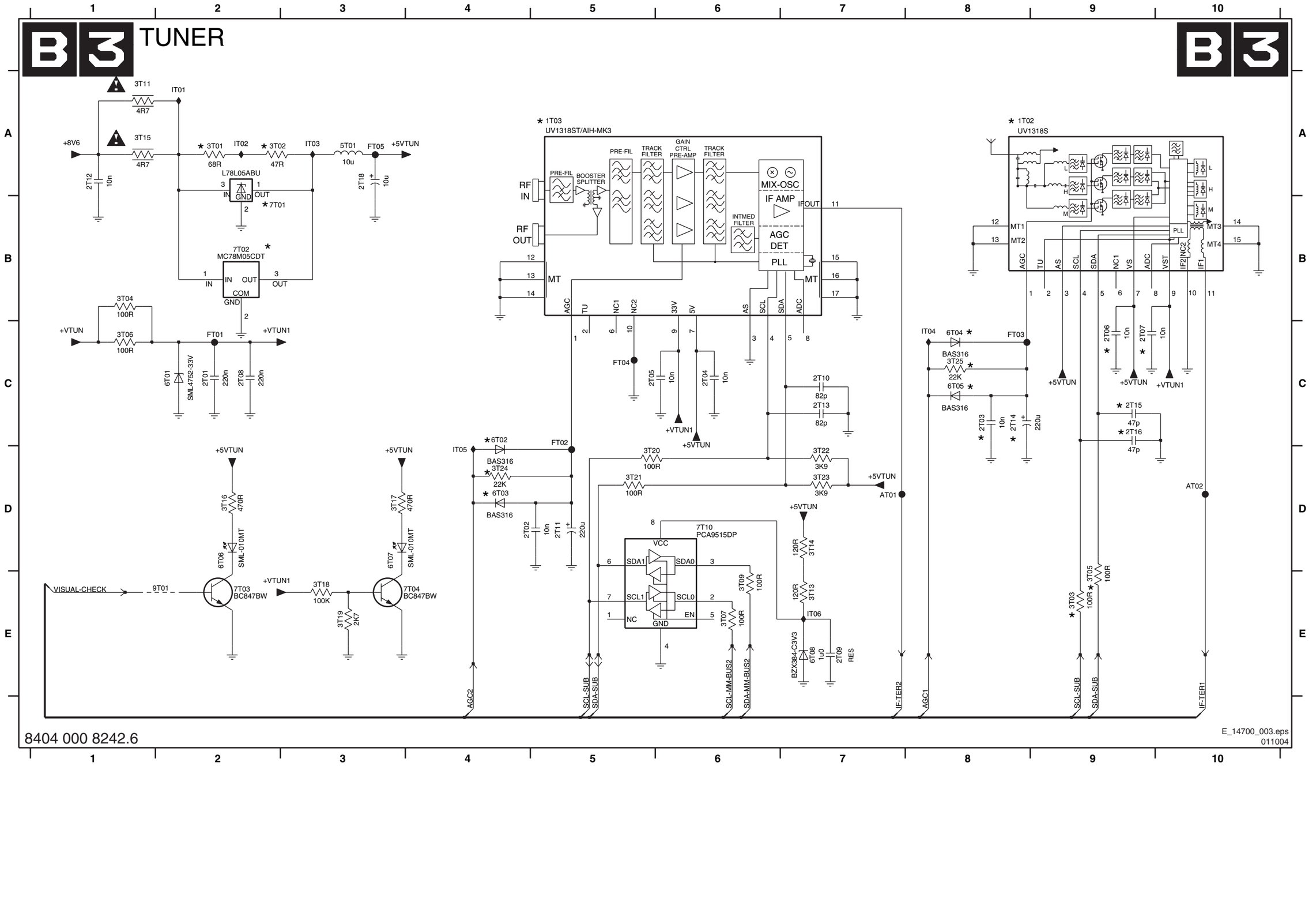

8404 000 8242.6

E_14700_003.eps
011004

Small Signal Board: MPIF/AVIP Main: Video Sel + Data Link

2C01 C4 2C02 C4 | 2C03 C2 2C04 D4 | 2C05 D3 2C06 D2 | 2C07 D3 2C08 D2 | 2C09 D3 2C11 E3 | 2C12 E4 2C13 E5 | 2C14 E3 2C15 E3 | 2C16 E3 2C17 F3 | 2C18 F2 2C19 F2 | 2C20 G2 2C21 F5 | 2C22 G5 2C23 G9 | 2C25 G5 2C27 F4 | 2C28 G4 2C29 D3 | 2C30 B10 3C76 C10 | 5C01 F4 5C03 G4 | 7C00-B B6 7C57 B10 | 9C23 B10 FC02 C5 | FC03 F5 FC04 F11 | FC06 G5 FC07 B10 | IC02 C3 IC04 F5 | IC05 G9 IC06 C4 | IC07 C4 IC08 D4 | IC09 D5 IC11 B9

B 4 A — MPIF/AVIP MAIN: VIDEO SEL + DATA LINK — B 4 A

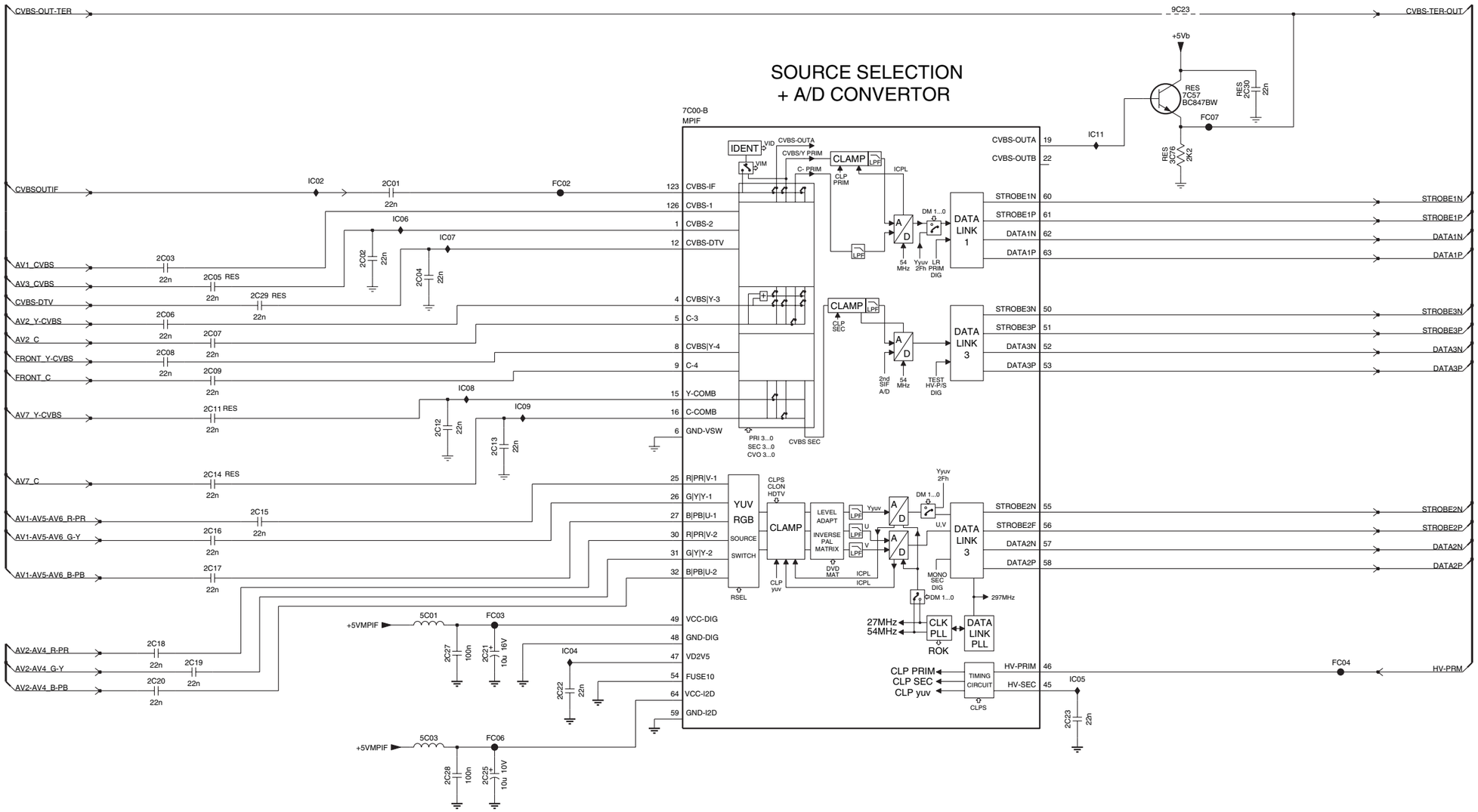

8204 000 8240.6

E_14700_004.eps
011004

Small Signal Board: MPIF/AVIP Main: Supply + Control

B 4 B MPIF/AVIP MAIN: SUPPLY + CONTROL

B 4 B

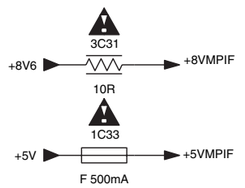

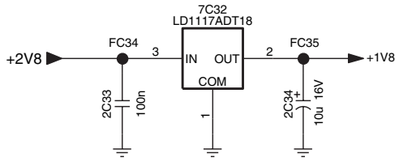

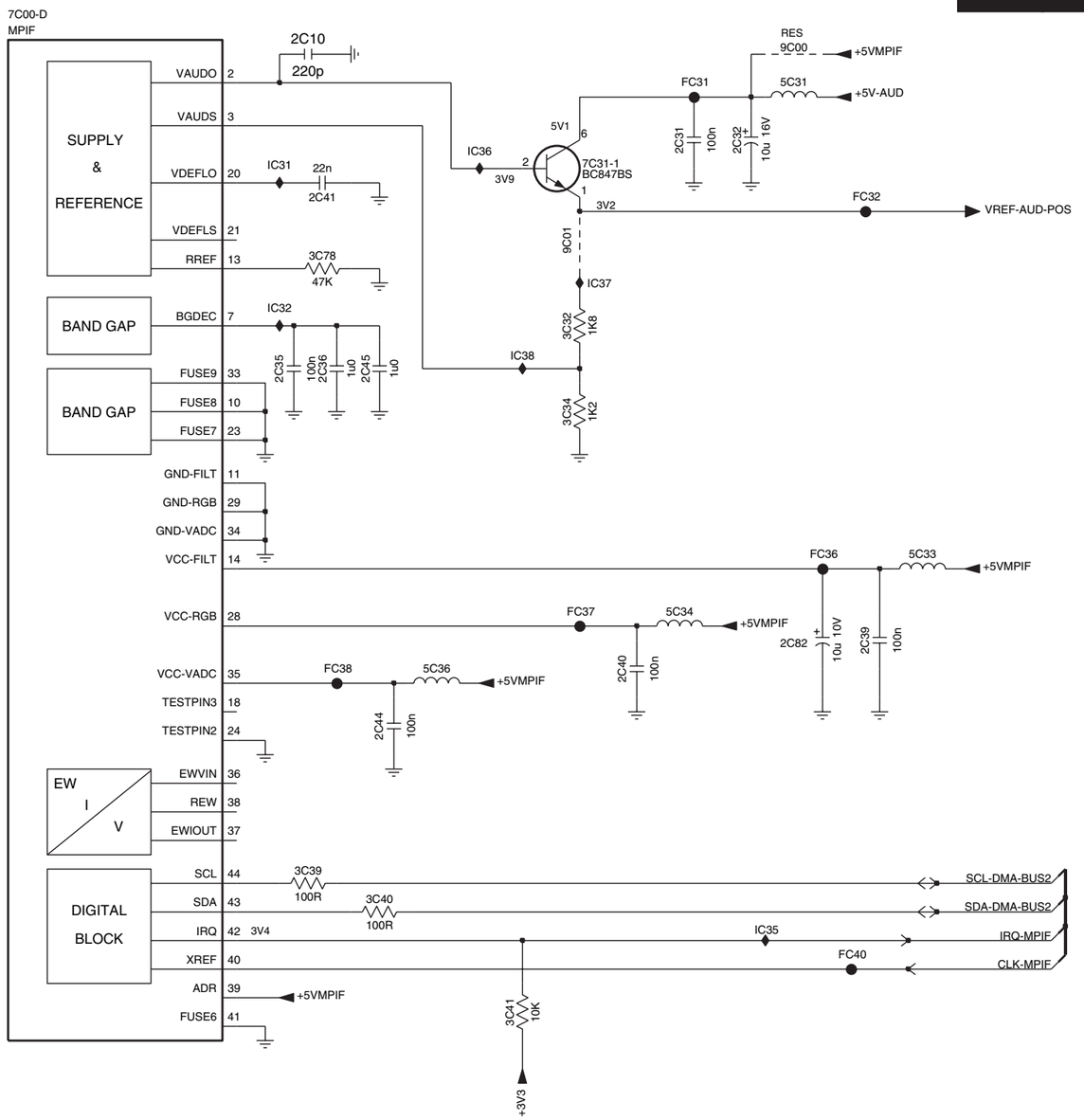

1C33 B1
2C10 A6
2C31 B8
2C32 B8
2C33 C1
2C34 C2
2C35 C6
2C36 C6
2C37 D2
2C38 D3
2C39 D9
2C40 D8
2C41 B6
2C44 D6
2C45 C6
2C82 D8
3C31 B1
3C32 B7
3C34 C7
3C39 E6
3C40 E6
3C41 F7
3C78 B6
5C31 A8
5C32 D2
5C33 D9
5C34 D8
5C36 D7
7C00-D A4
7C31-1 B7
7C32 C2
9C00 A8
9C01 B7
FC31 A8
FC32 B9
FC34 C2
FC35 C2
FC36 D9
FC37 D7
FC38 D6
FC40 F9
IC31 B6
IC32 B6
IC34 D3
IC35 F8
IC36 B7
IC37 B7
IC38 C7

E_14700_005.eps
011004

Small Signal Board: MPIF/AVIP Main: IF + SAW Filter

1C51 A4	2C50 A5	2C57 A7	2C66 C9	2C71 D8	2C76 A8	2C81 A6	3C58 D3	3C63 E7	3C68 C1	3C73 A9	3C82 C9	3C87 A6	5C56 C9	7C00-C B6	7C60-1 B9	9C53 B3	9C58 E2	AC05 B4	IC01 B9	IC53 C1	IC58 E3	IC64 C8	IC69 A9
1C52 B4	2C52 A1	2C59 B1	2C67 C5	2C72 E2	2C77 A8	3C50 D2	3C59 D3	3C64 E7	3C69 C1	3C74 A9	3C83 B10	5C02 A6	5C57 D1	7C53 D3	7C60-2 C9	9C54 B3	AC01 B6	FC05 A7	IC03 C10	IC54 D2	IC59 B5	IC65 D8	IC70 A9
1C53 C4	2C53 A1	2C60 B1	2C68 C8	2C73 D1	2C78 C5	3C53 B6	3C60 D2	3C65 D2	3C70 A9	3C75 A9	3C84 B10	5C52 A1	5C60 C10	7C54 D3	7C61 B10	9C55 E2	AC02 C6	FC52 D6	IC10 B9	IC55 B3	IC60 B6	IC66 A8	IC71 A9
1C55 A10	2C55 A7	2C63 B5	2C69 D6	2C74 B8	2C79 C8	3C56 D2	3C61 D3	3C66 D3	3C71 A9	3C80 B9	3C85 C9	5C53 A6	6C51 C3	7C55 E3	9C51 A3	9C56 B3	AC03 C6	FC62 C6	IC51 A1	IC56 D2	IC61 C6	IC67 A8	IC72 A7
2C24 A7	2C56 A7	2C65 C8	2C70 D1	2C75 C1	2C80 C10	3C57 D2	3C62 D7	3C67 E2	3C72 A9	3C81 B10	3C86 C10	5C54 B1	6C52 D3	7C56 A9	9C52 B3	9C57 B3	AC04 C6	IC00 B10	IC52 B1	IC57 D3	IC63 C8	IC68 A9	

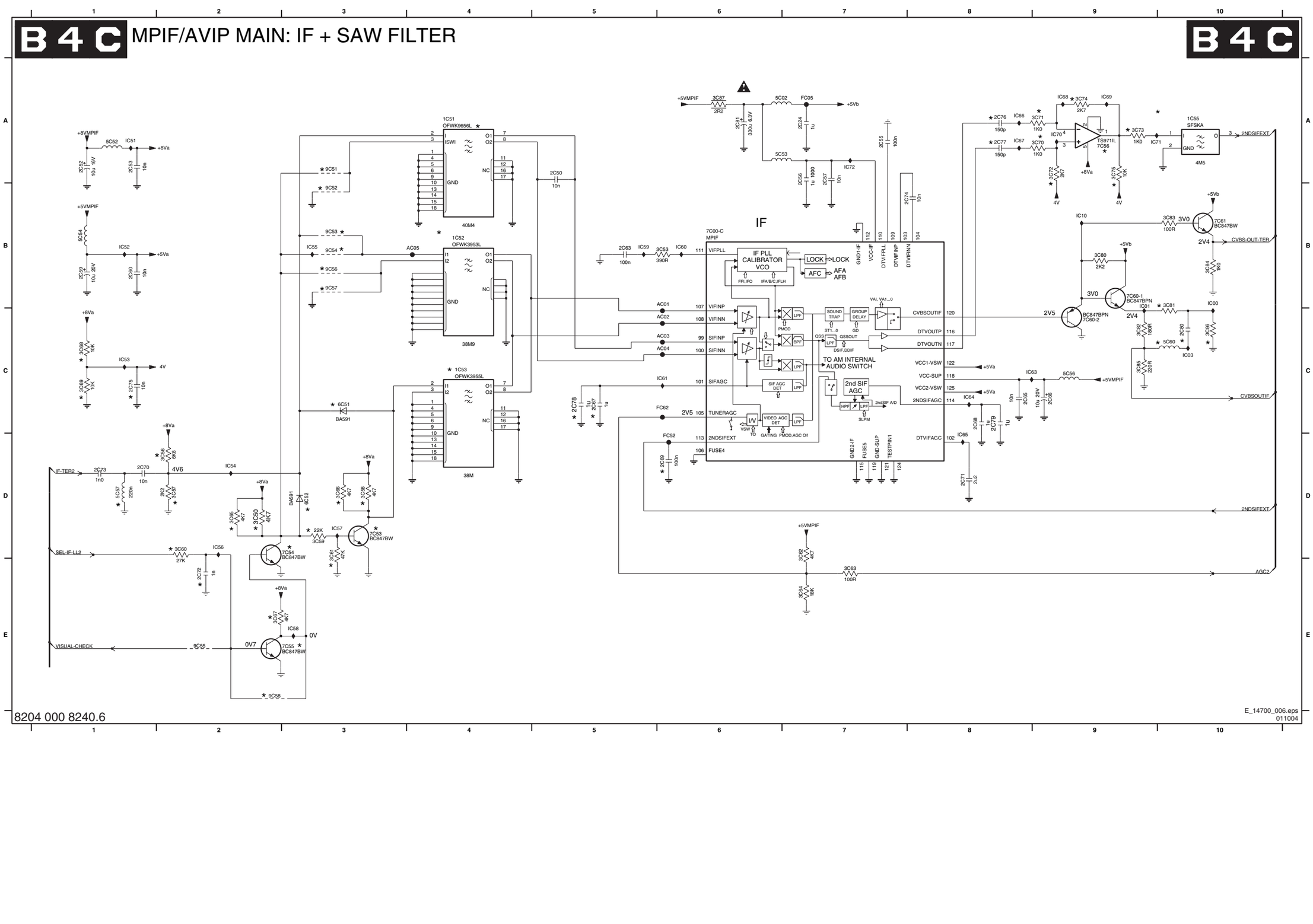

Small Signal Board: MPIF/AVIP Main: AVIP Video

B 4 D MPIF/AVIP MAIN: AVIP VIDEO B 4 D

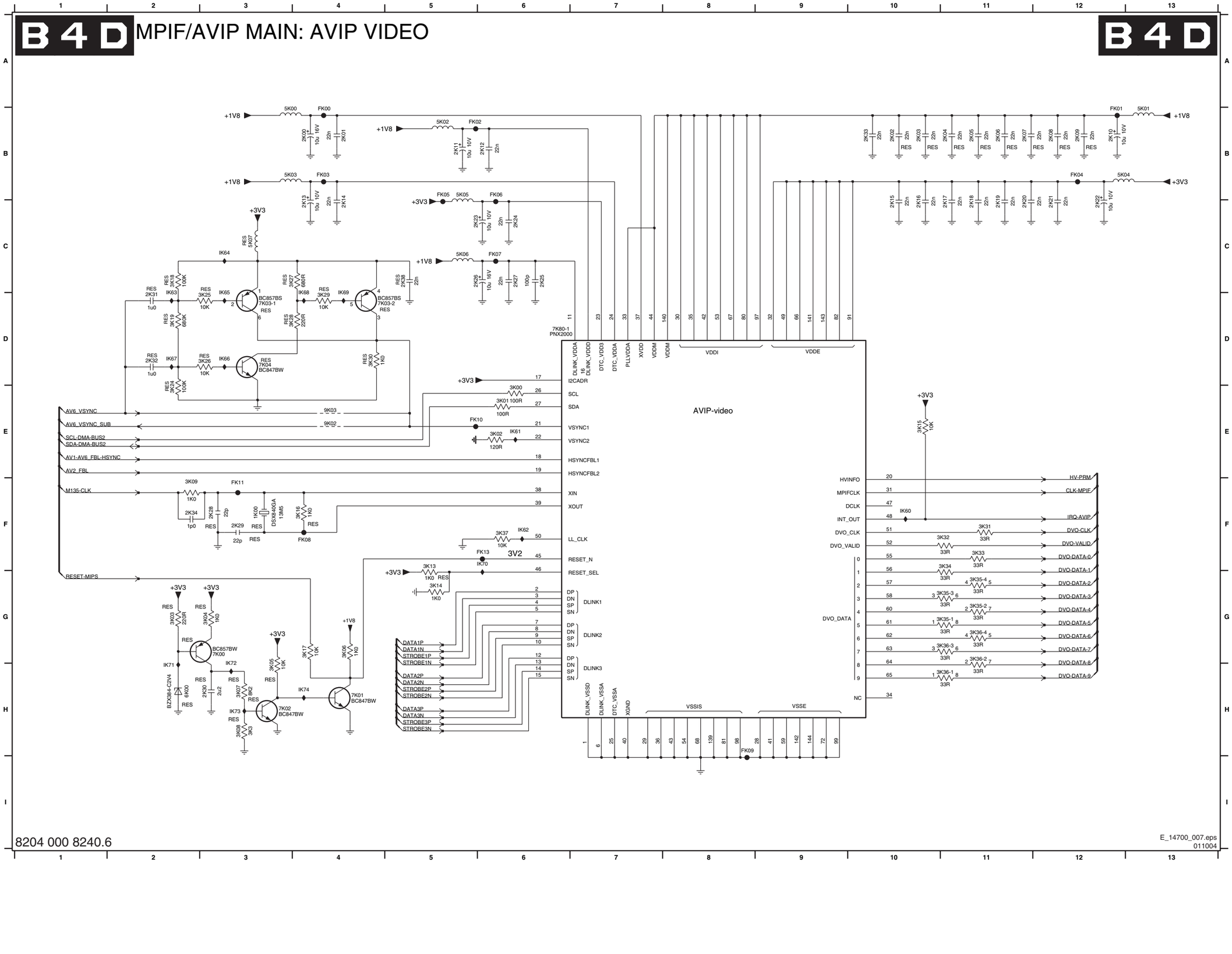

8204 000 8240.6

E_14700_007.eps
011004

1K00 F3	7K02 H3	
2K00 B4	7K03-1 D3	
2K01 B4	7K03-2 D4	
2K02 B10	7K04 D3	
2K03 B10	7K80-1 D6	
2K04 B11	9K02 E4	
2K05 B11	9K03 E4	
2K06 B11	FK00 B4	
2K07 B11	FK01 B12	
2K08 B12	FK02 B5	
2K09 B12	FK03 B4	
2K10 B12	FK04 B12	
2K11 B5	FK05 B5	
2K12 B6	FK06 B6	
2K13 C4	FK07 C6	
2K14 C4	FK08 F4	
2K15 C10	FK09 H8	
2K16 C10	FK10 E5	
2K17 C11	FK11 F3	
2K18 C11	FK13 F6	
2K19 C11	IK60 F10	
2K20 C11	IK61 E6	
2K21 C12	IK62 F6	
2K22 C12	IK63 C2	
2K23 C6	IK64 C3	
2K24 C6	IK65 C3	
2K25 C6	IK66 D3	
2K26 C6	IK67 D2	
2K27 C6	IK68 C4	
2K28 F3	IK69 C4	
2K29 F3	IK70 F6	
2K30 H3	IK71 H2	
2K31 D2	IK72 G3	
2K32 D2	IK73 H3	
2K33 B10	IK74 H4	
2K34 F2		
2K38 C5		
3K00 E6		
3K01 E6		
3K02 E6		
3K03 G2		
3K04 G3		
3K05 H3		
3K06 G4		
3K07 H3		
3K08 H3		
3K09 F2		
3K13 F5		
3K14 G5		
3K15 E10		
3K16 F4		
3K17 G4		
3K18 C2		
3K19 D2		
3K24 E2		
3K25 D3		
3K26 D3		
3K27 C4		
3K28 D4		
3K29 D4		
3K30 D4		
3K31 F11		
3K32 F11		
3K33 F11		
3K34 F11		
3K35-1 G11		
3K35-2 G11		
3K35-3 G11		
3K35-4 G11		
3K36-1 H11		
3K36-2 G11		
3K36-3 G11		
3K36-4 G11		
3K37 F6		
5K00 B3		
5K01 B13		
5K02 B5		
5K03 B3		
5K04 B12		
5K05 B5		
5K06 C5		
5K07 C3		
6K00 H2		
7K00 G3		
7K01 H4		

Small Signal Board: MPIF/AVIP Main: AVIP Audio

B 4 E MPIF/AVIP MAIN: AVIP AUDIO B 4 E

EXT-I2S-CLK-B → 3J36 RES 68R → I2S-CLK
I2S-MCH-SLR-BO → 3J45 68R RES → I2S-MCH-SLR-EL
I2S-MCH-CSW-BO → 3J46 68R RES → I2S-MCH-CSW-EL
I2S-MCH-LR-BO → 3J47 68R RES → I2S-MCH-LR-EL
I2S-MAIN-ND-B → 3J40 68R → IJ03 → I2S-MAIN-ND
I2S-AUX-MAIN → 3J41 68R → I2S-AUX-MAIN-O

VREF-AUD-POS
2J20 100n
2J21 220u
+3V3-AUD
9J00
SDAC-VDDD
2J26 100n
3J33 10K
7K80-2 PNX2000
SDAC_3V3
SDAC_VDDD
SDAC_VSSD
AVIP-audio

ADAC1 104 IJ50
ADAC2 107
ADAC3 110
ADAC4 113
ADAC5 116
ADAC6 119
ADAC7 122 IJ44
ADAC8 125 IJ45
ADAC9 128 2J39 3n3
ADAC10 131 2J43 3n3
ADAC11 134 2J45 3n3
ADAC12 137 2J44 3n3
NC 90

EXT-I2S-CLK-B 89 ADAC_CLK
JTAG-TD-DVB-AVIP2 9J10
9J11
92 TDI
JTAG-TD-AVIP2-COLUMBUS2 9J13 93 TDO
JTAG-TCK 94 TCK
JTAG-TMS 95 TMS
JTAG-TRST 96 TRST_N

I2S-MCH-LR-OA 88 I2S_IN_SD1
I2S-MCH-CSW-OA 87 I2S_IN_SD2
I2S-MCH-SLR-OA 86 I2S_IN_SD3
I2S-SUB-D-M 85 I2S_IN_SD4
I2S-MAIN-D-M 84 I2S_IN_SD5
I2S-AUX-SUB-O 83 I2S_IN_SD6
3J42 68R
I2S-MCH-LR-BO 77 I2S_OUT_SD1
I2S-MCH-CSW-BO 76 I2S_OUT_SD2
I2S-MCH-SLR-BO 69 I2S_OUT_SD3
I2S-MAIN-ND-B 75 IS2_OUT_SD4
I2S-AUX-MAIN 74 I2S_OUT_SD5
73 I2S_OUT_SD6
70 I2S_OUT_SD3_WS
71 I2S_OUT_SD3_SCK
I2S-WS-M 78 I2S_WS_SYS
I2S-BCLK-M 79 I2S_SCK_SYS
100
105 106 111 112 117 118 123 124 129 130 135 136 VREF-AUD-NEG

DSNDR2 DSNDL2 DSNDL1 DSNDR1

+12VSW
2J00 100n
7J00-1 TS924IPT
1V6 3 4 4V3 1 AUDIO-L
2J02 3n3
2J08 33p
IJ49
3J00 220K
9J01 IJ33 3J02 47K
RES 3J48 100K
3J04 22K

+12VSW
7J00-2 TS924IPT
IJ41
1V6 5 4 7 4V3 AUDIO-R
2J41 3n3
2J18 33p
IJ37
3J06 220K
9J02 IJ32 3J08 47K
RES 3J26 100K
3J10 22K

+12VSW
7J00-3 TS924IPT
1V6 10 4 8 1V6 AUDIO-C
2J03 3n3
2J09 33p
IJ38
3J01 220K
2J07 1u0 IJ02 3J03 47K
RES 3J49 100K
3J05 22K

IJ42

+12VSW
7J00-4 TS924IPT
IJ43
1V6 12 4 14 11V7 AUDIO-SW
2J14 3n3
13
2J19 33p
IJ48
3J07 100K
3J27 39K
2J17 1u0 IJ47 3J09 82K RES
3J11 68K RES
9J12 AUDIO-SW-EXT

+5V
7J02-1 TS482IST
IJ44
1V6 3 8 1 2V2 AUDIO-HDPH-L
2J36 3n3
2
4
1V6
IJ45
2J12 33p
IJ46
3J28 100K
3J18 47K
2J38 1u0
3J19 22K
IJ31
3J20 47K

+5V
2J37 100n
7J02-2 TS482IST
1V6 5 8 7 2V2 AUDIO-HDPH-R
2J42 3n3
6
4
1V6
IJ34
2J13 33p
3J29 100K
3J21 47K
2J46 1u0
IJ00
3J23 22K
3J24 47K

E_14700_008.eps
011004

8204 000 8240.6

2J00 A8
2J02 B7
2J03 D8
2J07 E9
2J08 B8
2J09 D9
2J12 H7
2J13 I7
2J14 F8
2J17 G8
2J18 D8
2J19 F8
2J20 D2
2J21 D2
2J26 E2
2J36 G7
2J37 I7
2J38 H7
2J39 H6
2J41 C7
2J42 I6
2J43 H6
2J44 I6
2J45 I6
2J46 J7
3J00 B8
3J01 E9
3J02 B8
3J03 E9
3J04 C7
3J05 E9
3J06 D8
3J07 F8
3J08 D8
3J09 G8
3J10 D7
3J11 G8
3J18 H7
3J19 H7
3J20 H7
3J21 J7
3J23 J6
3J24 J7
3J26 D7
3J27 G8
3J28 H7
3J29 J6
3J33 E2
3J36 A3
3J40 C3
3J41 C3
3J42 H2
3J45 B3
3J46 B3
3J47 B3
3J48 B7
3J49 E8
7J00-1 A7
7J00-2 C7
7J00-3 D9
7J00-4 F8
7J02-1 G7
7J02-2 I7
7K80-2 E3
9J00 D2
9J01 B7
9J02 D7
9J10 F2
9J11 F2
9J12 F9
9J13 F2
IJ00 J7
IJ02 E9
IJ03 B4
IJ31 H7
IJ32 D7
IJ33 B7
IJ34 I7
IJ37 D7
IJ38 E8
IJ41 C6
IJ42 E7
IJ43 F7
IJ44 G6
IJ45 G6
IJ46 H7
IJ47 F8
IJ48 F8
IJ49 B7
IJ50 E5

Small Signal Board: MPIF/AVIP Main: Columbus

B 4 F MPIF/AVIP MAIN: COLUMBUS

B 4 F

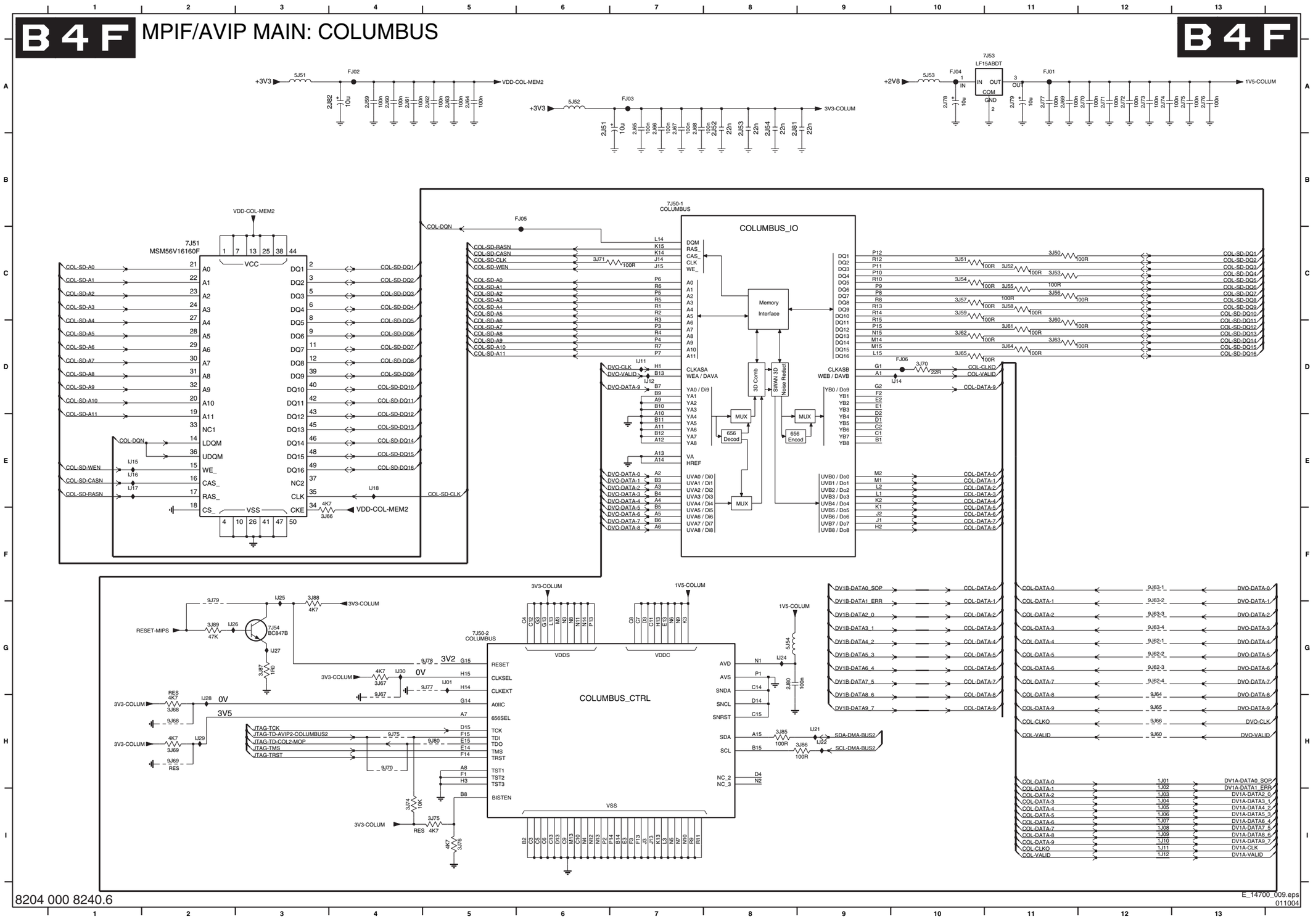

8204 000 8240.6

E_14700_009.eps
011004

1J01 H12
1J02 I12
1J03 I12
1J04 I12
1J05 I12
1J06 I12
1J07 I12
1J08 I12
1J09 I12
1J10 I12
1J11 I12
1J12 I12
2J51 A6
2J52 A8
2J53 A8
2J54 A8
2J59 A4
2J60 A4
2J61 A4
2J62 A5
2J63 A5
2J64 A5
2J65 A7
2J66 A7
2J67 A7
2J68 A7
2J69 A11
2J70 A12
2J71 A12
2J72 A12
2J73 A12
2J74 A12
2J75 A13
2J76 A13
2J77 A11
2J78 A10
2J79 A11
2J80 G8
2J81 A8
2J82 A4
3J50 C11
3J51 C10
3J52 C11
3J53 C11
3J54 C10
3J55 C11
3J56 C11
3J57 C10
3J58 C11
3J59 C10
3J60 D11
3J61 D11
3J62 D10
3J63 D11
3J64 D11
3J65 D10
3J66 F3
3J67 G4
3J68 H2
3J69 H2
3J70 D10
3J71 C6
3J74 I4
3J75 I5
3J76 I5
3J85 H8
3J86 H9
3J87 G3
3J88 F3
3J89 G2
5J51 A3
5J52 A6
5J53 A10
5J54 G8
7J50-1 B7
7J50-2 G5
7J51 C2
7J53 A11
7J54 G3
9J60 H12
9J62-1 G12
9J62-2 G12
9J62-3 G12
9J62-4 G12
9J63-1 F12
9J63-2 G12
9J63-3 G12
9J63-4 G12
9J64 H12
9J65 H12
9J66 H12
9J67 H4
9J68 H2
9J69 H2
9J70 H4
9J75 H4
9J77 G5
9J78 G5
9J79 G2
9J80 H5
FJ01 A11
FJ02 A4
FJ03 A7
FJ04 A10
FJ05 B6
FJ06 D10
IJ01 G5
IJ11 D7
IJ12 D7
IJ14 D10
IJ15 E1
IJ16 E1
IJ17 E1
IJ18 E4
IJ21 H9
IJ22 H9
IJ24 G8
IJ25 F3
IJ26 G2
IJ27 G3
IJ28 H2
IJ29 H2
IJ30 G4

Small Signal Board: MPIF/AVIP Main: Audio Switch

B 4 G MPIF/AVIP MAIN: AUDIO SWITCH

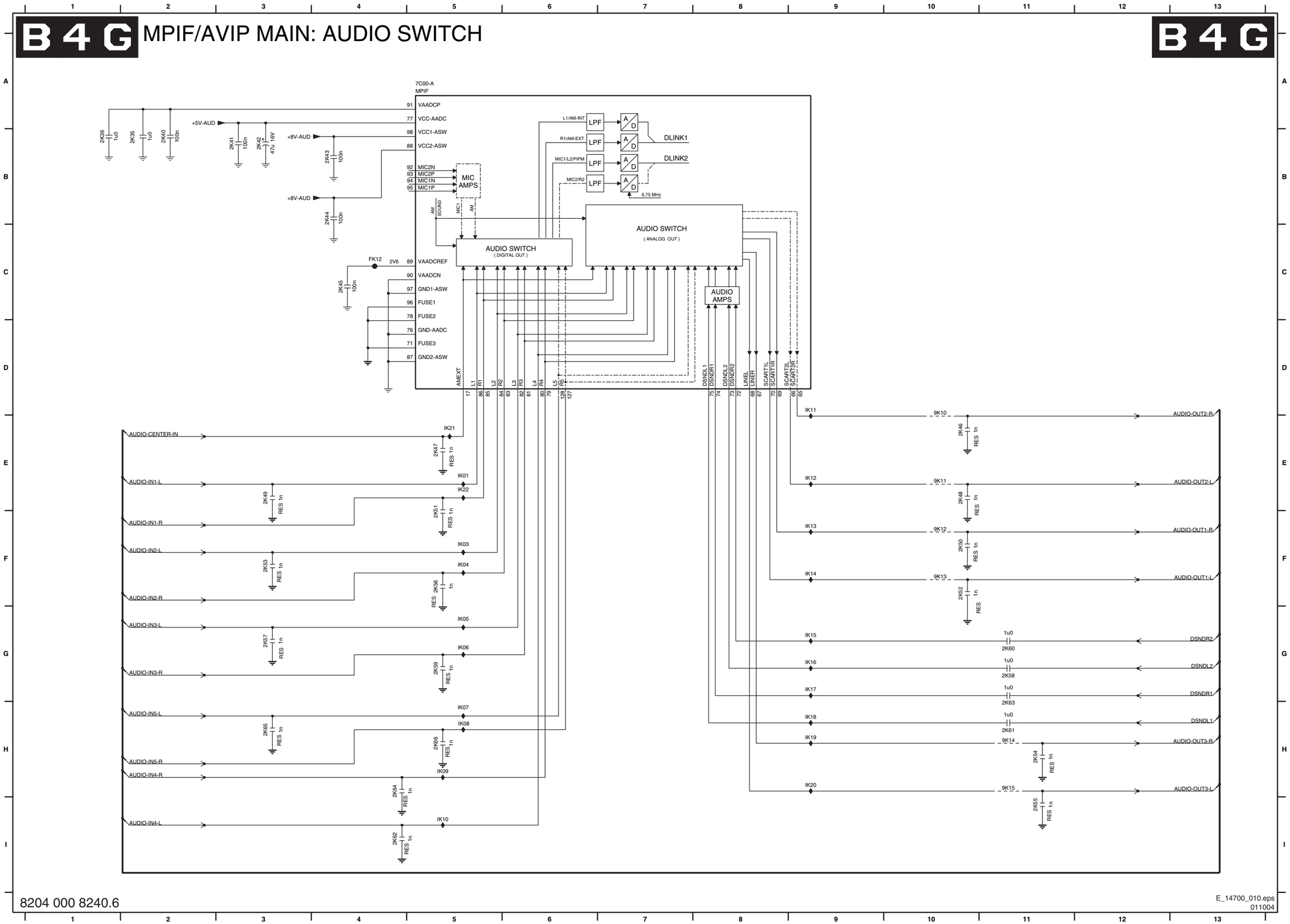

2K35 B2
2K36 B1
2K40 B2
2K41 B3
2K42 B3
2K43 B4
2K44 B4
2K45 C4
2K46 E10
2K47 E5
2K48 E10
2K49 E3
2K50 F10
2K51 F5
2K52 F10
2K53 F3
2K54 H11
2K55 I11
2K56 F5
2K57 G3
2K58 G11
2K59 G5
2K60 G11
2K61 H11
2K62 I4
2K63 G11
2K64 H4
2K65 H3
2K66 H5
7C00-A A5
9K10 D10
9K11 E10
9K12 F10
9K13 F10
9K14 H11
9K15 H11
FK12 C4
IK01 E5
IK03 F5
IK04 F5
IK05 G5
IK06 G5
IK07 H5
IK08 H5
IK09 H5
IK10 I5
IK11 D9
IK12 E9
IK13 F9
IK14 F9
IK15 G9
IK16 G9
IK17 G9
IK18 H9
IK19 H9
IK20 H9
IK21 E5
IK22 E5

8204 000 8240.6

E_14700_010.eps
011004

Small Signal Board: MPIF/AVIP Sub: Videosel + Data Link

2A01 C4 2A02 C4 | 2A03 C2 2A04 C4 | 2A05 C3 2A06 D2 | 2A07 D3 2A08 D2 | 2A09 D3 2A11 D3 | 2A12 E4 2A13 E5 | 2A14 E3 2A15 E3 | 2A16 E3 2A17 F3 | 2A18 F2 2A19 F2 | 2A20 G2 2A21 F5 | 2A22 G5 2A23 G9 | 2A25 G5 2A27 F4 | 2A28 G4 5A01 F4 | 5A03 G4 7A00-B B6 | 9A00 A9 9A09 B9 | FA00 A11 FA02 C5 | FA03 F5 FA04 F11 | FA06 G5 IA02 C3 | IA04 F5 IA05 F9 | IA06 C4 IA07 C4 | IA08 D4 IA09 D5

1 2 3 4 5 6 7 8 9 10 11 12

B5A MPIF/AVIP SUB : VIDEOSEL + DATA LINK B5A

A B C D E F G

9A00 RES — FA00 CVBS-TER-OUT
9A09 RES — CVBS-DTV

CVBS-OUT-TER

SOURCE-SELECTION +A/D CONVERTOR

7A00-B MPIF

CVBSOUTIF — IA02 — 2A01 100n — FA02 — 123 CVBS-IF
126 CVBS-1
IA06 — 2A02 22n
1 CVBS-2
IA07 — 2A04 22n
12 CVBS-DTV

AV1_CVBS — 2A03 100n
AV3_CVBS — 2A05 RES 100n
4 CVBS|Y-3
AV2_Y-CVBS — 2A06 100n
AV2_C — 2A07 100n
5 C-3
FRONT_Y-CVBS — 2A08 100n
FRONT_C — 2A09 100n
8 CVBS|Y-4
9 C-4
IA08 — IA09
AV7_Y-CVBS — 2A11 RES 22n
15 Y-COMB
16 C-COMB
2A12 22n — 2A13 22n
6 GND-VSW

AV7_C — 2A14 RES 22n
AV1-AV5-AV6_R-PR — 2A15 RES 100n
AV1-AV5-AV6_G-Y — RES — 2A16 100n
AV1-AV5-AV6_B-PB — RES — 2A17 100n
25 R|PR|V-1
26 G|Y|Y-1
27 B|PB|U-1
30 R|PR|V-2
31 G|Y|Y-2
32 B|PB|U-2
YUV RGB SOURCE SWITCH — RSEL

AV2-AV4_R-PR — 2A18 100n
AV2-AV4_G-Y — 2A19 100n
AV2-AV4_B-PB — 2A20 100n
+5VMPIF — 5A01 — FA03
2A27 100n — 2A21 10u 16V
49 VCC-DIG
48 GND-DIG
IA04
47 VD2V5
2A22 22n
54 FUSE10
64 VCC-I2D
59 GND-I2D
+5VMPIF — 5A03 — FA06
2A28 100n — 2A25 10u 10V

IDENT VID VIM — CVBS-OUTA — CVBS/Y PRIM — C- PRIM
CLAMP LPF — CLP PRIM — ICPL
A/D — 54 MHz — Yuv 2Fh — LR PRIM DIG — DM 1...0
DATA LINK 1
CVBS-OUTA 19
CVBS-OUTB 22
STROBE1N 60 — STROBE1N
STROBE1P 61 — STROBE1P
DATA1N 62 — DATA1N
DATA1P 63 — DATA1P

CLAMP LPF — CLP SEC
A/D — 2nd SIF A/D — 54 MHz — TEST HV-P/S DIG
DATA LINK 3
STROBE3N 50 — STROBE3N
STROBE3P 51 — STROBE3P
DATA3N 52 — DATA3N
DATA3P 53 — DATA3P

PRI 3...0 SEC 3...0 CVO 3...0 — CVBS SEC

CLPS CLON HDTV — CLAMP — CLP yuv
LEVEL ADAPT — INVERSE PAL MATRIX — DVD MAT — ICPL — ICPL
Yyuv — U — V — LPF
A/D — A/D — Yyuv 2Fh — DM 1...0 — U,V
DATA LINK 3
STROBE2N 55 — STROBE2N
STROBE2F 56 — STROBE2P
DATA2N 57 — DATA2N
DATA2P 58 — DATA2P
MONO SEC DIG — DM 1...0 — 297MHz
27MHz 54MHz — CLK PLL — ROK — DATA LINK PLL

CLP PRIM CLP SEC CLP yuv — TIMING CIRCUIT — CLPS
HV-PRIM 46 — FA04 — HV-PRM
HV-SEC 45 — IA05 — 2A23 22n

8204 000 8237.6

E_14700_011.eps 011004

Small Signal Board: MPIF/AVIP Sub: Supply + Control

MPIF/AVIP SUB: SUPPLY + CONTROL

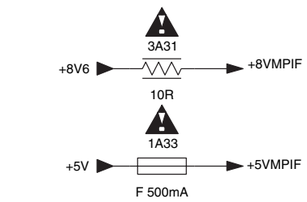

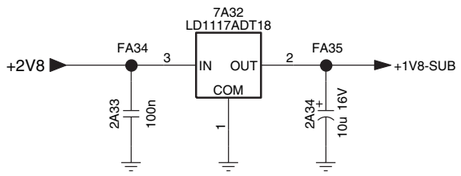

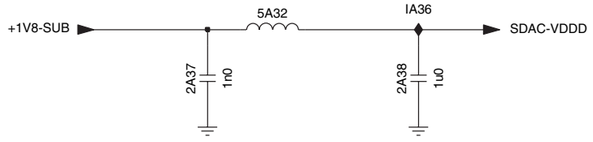

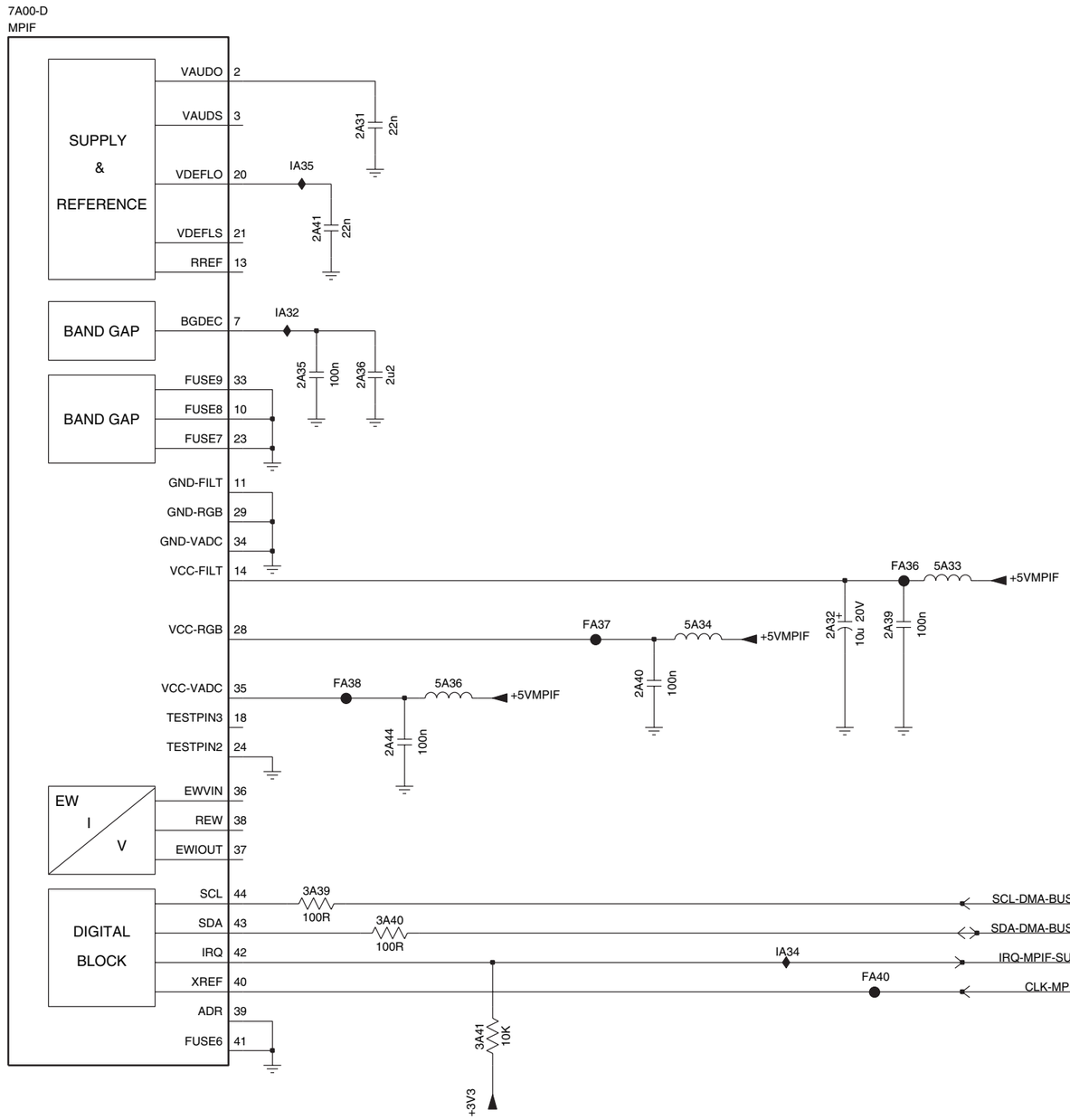

1A33 B1
2A31 B6
2A32 D8
2A33 C1
2A34 C2
2A35 C5
2A36 C6
2A37 D1
2A38 D2
2A39 D8
2A40 D7
2A41 B5
2A44 E6
3A31 B1
3A39 E5
3A40 E6
3A41 F6
5A32 D2
5A33 D8
5A34 D7
5A36 D6
7A00-D A4
7A32 C2
FA34 C1
FA35 C2
FA36 D8
FA37 D7
FA38 D5
FA40 F8
IA32 B5
IA34 F8
IA35 B5
IA36 D2

E_14700_012.eps
011004

Small Signal Board: MPIF/AVIP Sub: IF + SAW Filter

1A51 A3	2A50 A4	2A57 A6	2A66 C8	2A71 D7	2A76 A8	2A81 A6	3A58 D3	3A63 E6	3A68 C1	3A73 A9	3A82 C8	3A87 A5	5A56 C8	7A00-C B5	7A60-1 B8	9A53 B2	AA01 B5	FA05 A6	IA03 C9	IA50 A1	IA55 B1	IA60 B5	IA65 D1
1A52 B3	2A52 A1	2A59 B1	2A67 C4	2A72 E1	2A77 A8	3A50 D2	3A59 D2	3A64 E6	3A69 C1	3A74 A8	3A83 B8	5A02 A6	5A57 D1	7A53 D3	7A60-2 C8	9A54 B2	AA02 C5	FA51 E6	IA10 B8	IA51 A6	IA56 A8	IA61 B5	IA66 D2
1A53 C3	2A53 A1	2A60 B1	2A68 C7	2A73 D1	2A78 C4	3A53 B5	3A60 D1	3A65 D1	3A70 A8	3A75 A8	3A84 B9	5A52 A1	5A60 C9	7A54 D2	7A61 B9	9A56 B2	AA03 C5	FA52 D5	IA20 B8	IA52 A8	IA57 A9	IA62 C1	IA67 D1
1A55 A9	2A55 A7	2A63 B5	2A69 D5	2A74 B7	2A79 C8	3A56 D1	3A61 D2	3A66 D2	3A71 A8	3A80 B8	3A85 C8	5A53 A6	6A51 C2	7A55 E2	9A51 A2	9A57 B2	AA04 C5	IA00 B9	IA21 B9	IA53 A8	IA58 A8	IA63 C8	IA68 E2
2A24 A6	2A56 A6	2A65 C8	2A70 D1	2A75 C1	2A80 C9	3A57 D1	3A62 D6	3A67 E2	3A72 A8	3A81 B9	3A86 C9	5A54 B1	6A52 D2	7A56 A8	9A52 B2	9A58 E2	AA05 B3	IA01 B8	IA22 C5	IA54 A2	IA59 A8	IA64 C7	

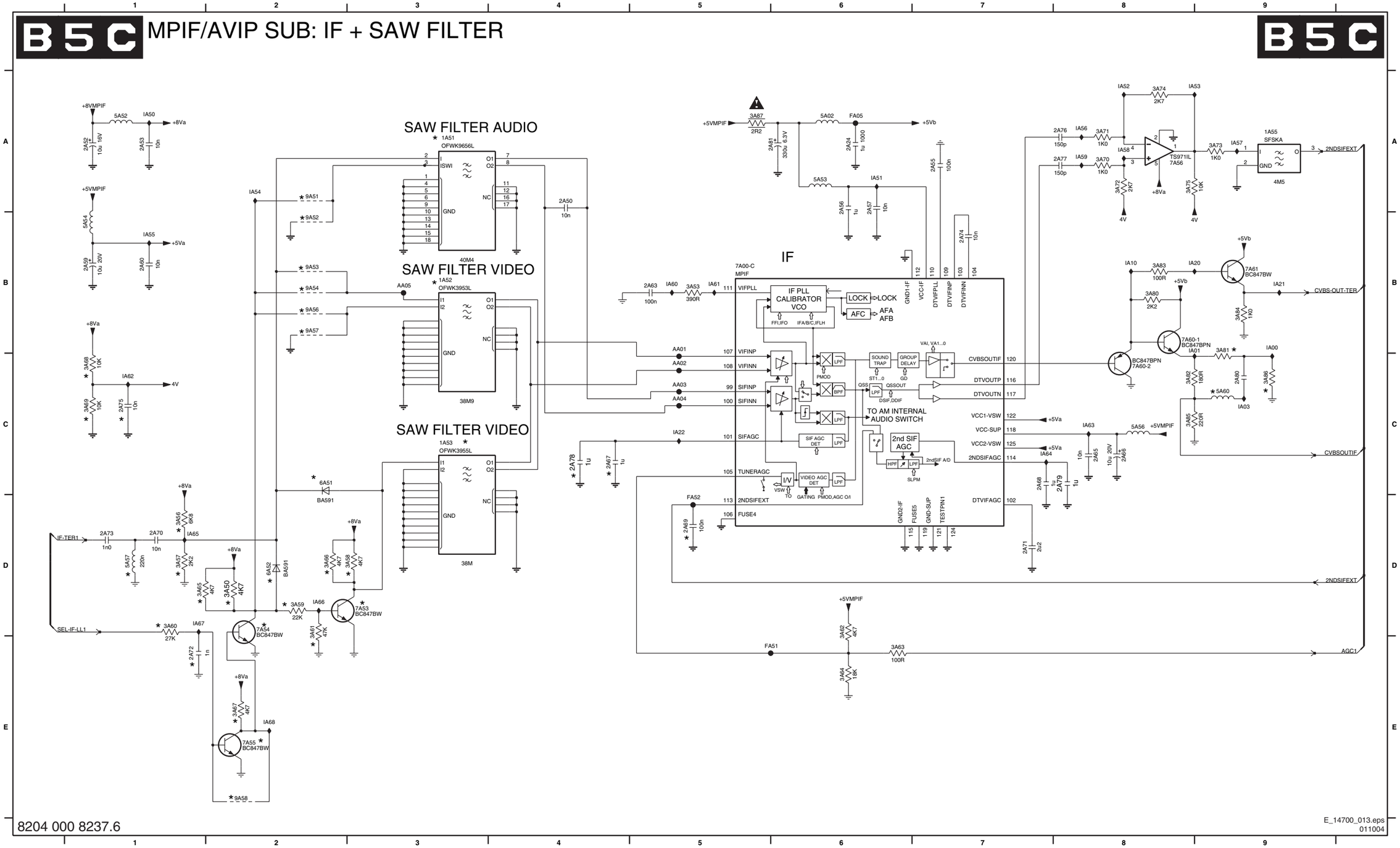

Small Signal Board: MPIF/AVIP Sub: AVIP Video

MPIF/AVIP SUB: AVIP VIDEO

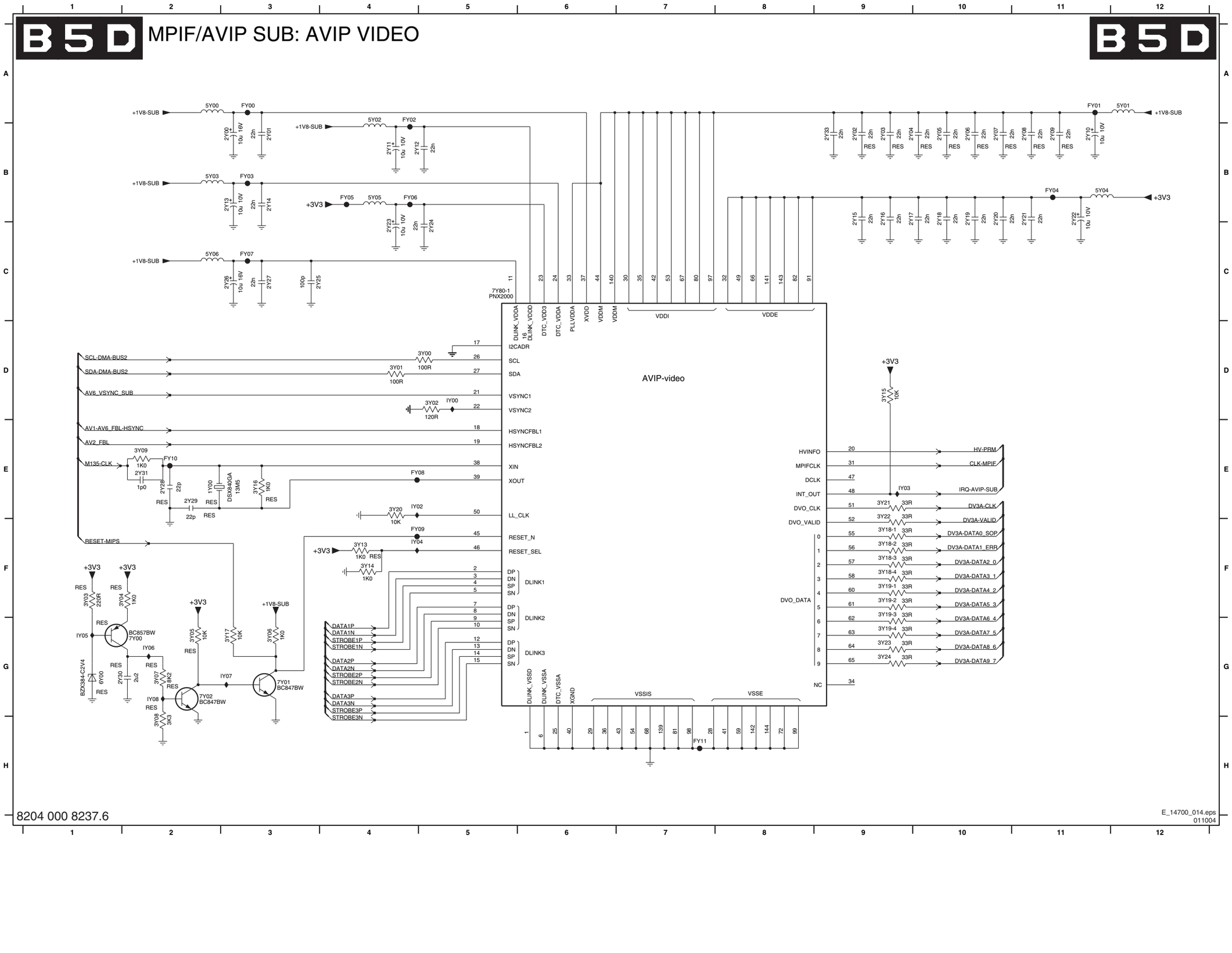

8204 000 8237.6

E_14700_014.eps
011004

1Y00 E2
2Y00 B3
2Y01 B3
2Y02 B9
2Y03 B9
2Y04 B10
2Y05 B10
2Y06 B10
2Y07 B10
2Y08 B11
2Y09 B11
2Y10 B11
2Y11 B4
2Y12 B5
2Y13 B3
2Y14 B3
2Y15 B9
2Y16 B9
2Y17 B10
2Y18 B10
2Y19 B10
2Y20 B10
2Y21 B11
2Y22 B11
2Y23 C4
2Y24 C5
2Y25 C3
2Y26 C3
2Y27 C3
2Y28 E2
2Y29 E2
2Y30 G2
2Y31 E2
2Y33 B9
3Y00 D5
3Y01 D4
3Y02 D5
3Y03 F1
3Y04 F2
3Y05 G2
3Y06 G3
3Y07 G2
3Y08 H2
3Y09 E2
3Y13 F4
3Y14 F4
3Y15 D9
3Y16 E3
3Y17 G3
3Y18-1 F9
3Y18-2 F9
3Y18-3 F9
3Y18-4 F9
3Y19-1 F9
3Y19-2 F9
3Y19-3 F9
3Y19-4 G9
3Y20 E4
3Y21 E9
3Y22 E9
3Y23 G9
3Y24 G9
5Y00 A2
5Y01 A12
5Y02 A4
5Y03 B2
5Y04 B11
5Y05 B4
5Y06 C2
6Y00 G1
7Y00 G2
7Y01 G3
7Y02 G2
7Y80-1 C5
FY00 A3
FY01 A11
FY02 A4
FY03 B3
FY04 B11
FY05 B4
FY06 B4
FY07 C3
FY08 E4
FY09 F4
FY10 E2
FY11 H7
IY00 D5
IY02 E4
IY03 E9
IY04 F4
IY05 G1
IY06 G2
IY07 G3
IY08 G2

Small Signal Board: MPIF/AVIP Sub: AVIP Audio

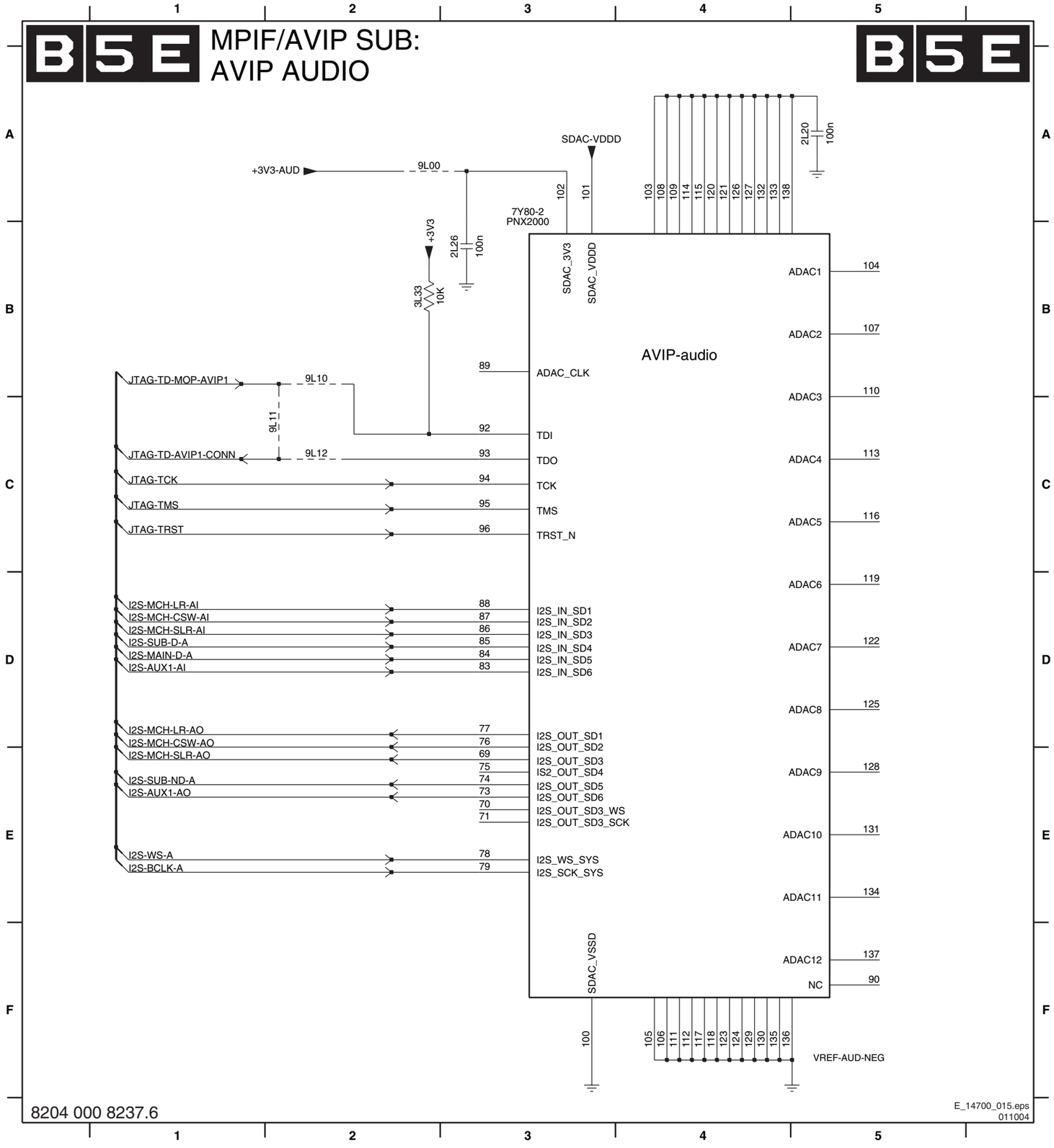

Small Signal Board: MPIF/AVIP Sub: I2S

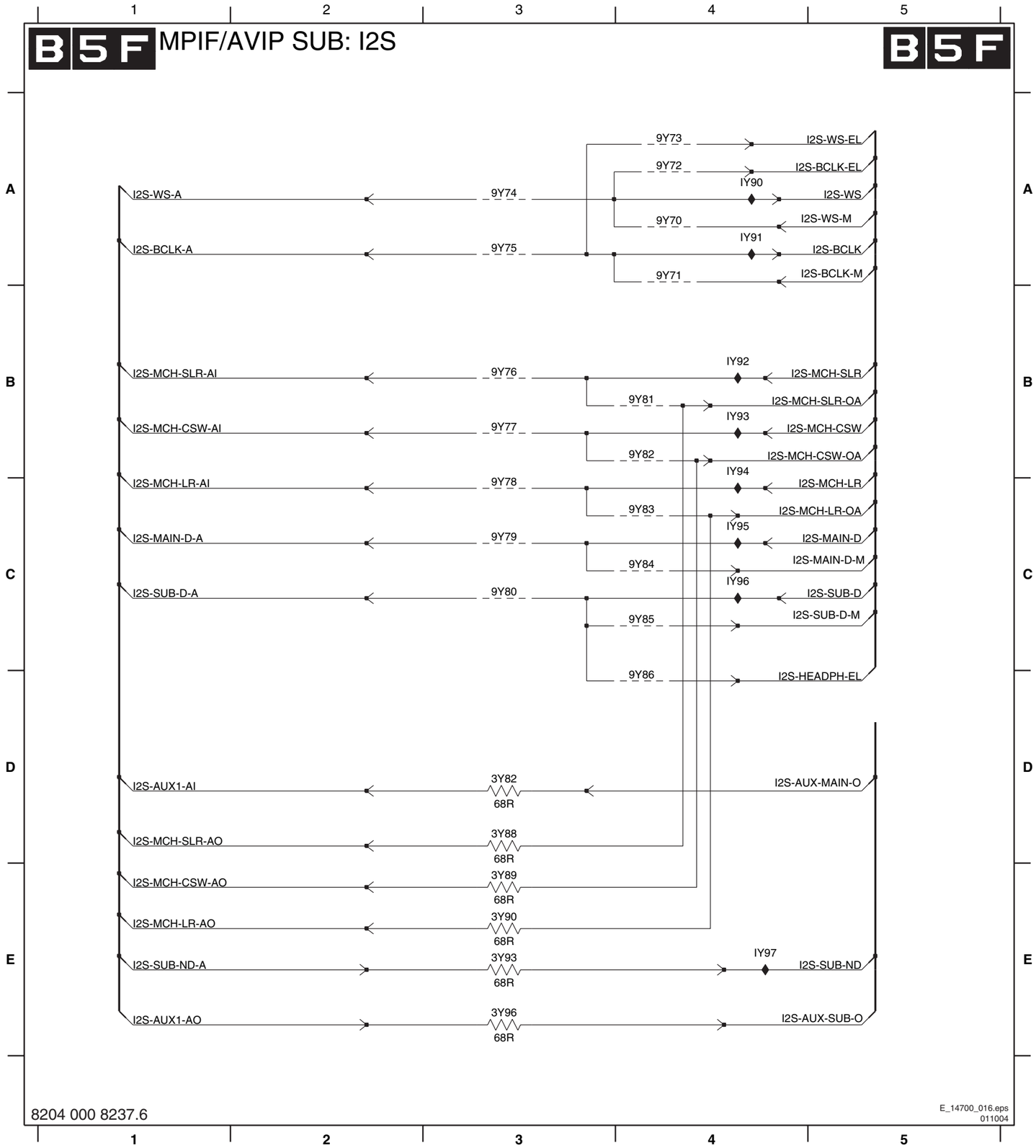

3Y82 D3
3Y88 D3
3Y89 E3
3Y90 E3
3Y93 E3
3Y96 E3
9Y70 A4
9Y71 A4
9Y72 A4
9Y73 A4
9Y74 A3
9Y75 A3
9Y76 B3
9Y77 B3
9Y78 C3
9Y79 C3
9Y80 C3
9Y81 B4
9Y82 B4
9Y83 C4
9Y84 C4
9Y85 C4
9Y86 D4
IY90 A4
IY91 A4
IY92 B4
IY93 B4
IY94 B4
IY95 C4
IY96 C4
IY97 E4

Small Signal Board: MPIF/AVIP Sub: Audio Switch

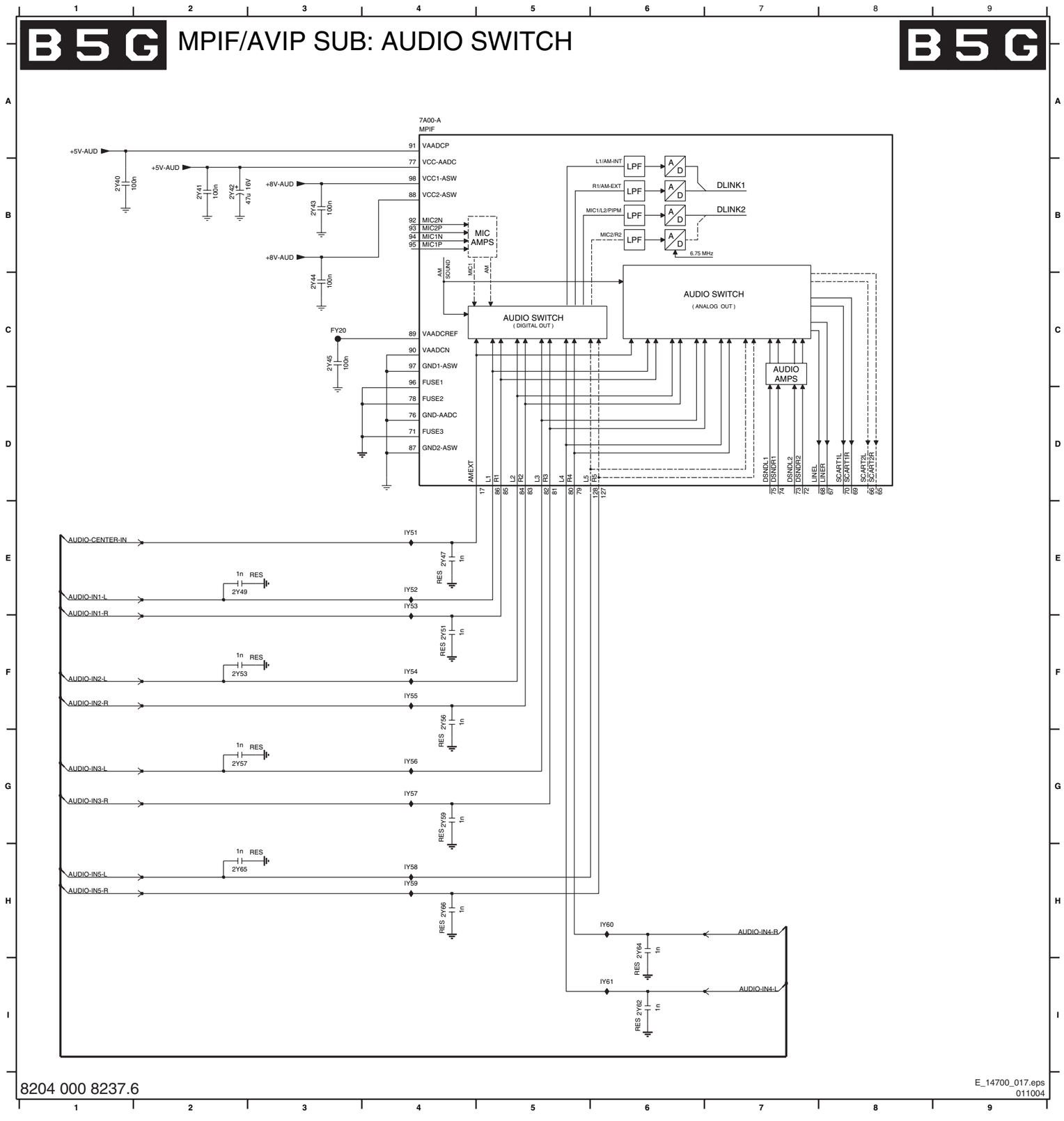

2Y40 B1
2Y41 B2
2Y42 B2
2Y43 B3
2Y44 C3
2Y45 C3
2Y47 E4
2Y49 E2
2Y51 F4
2Y53 F2
2Y56 F4
2Y57 G2
2Y59 G4
2Y62 I6
2Y64 H6
2Y65 H2
2Y66 H4
7A00-A A4
FY20 C3
IY51 E4
IY52 E4
IY53 E4
IY54 F4
IY55 F4
IY56 G4
IY57 G4
IY58 H4
IY59 H4
IY60 H6
IY61 I6

Small Signal Board: Viper: Control

1H00 A2 2H09 A2 2Q70 F14 3H05 D4 3H15 D2 3H44 G2 3H73 A7 3H84 E8 3H93 E8 3Q10 B4 3Q16 G10 3Q22 G10 3Q31 B3 5H04 F13 6H05-1 G13 9H00 G7 9H07 C2 9H14 F4 9Q08 F12 9Q19 E11 FH11 B2 FQ03 F14 IH11 G7 IH20 G7 IQ14 D10 IQ20 F12
1H01 F14 2H15 G1 3H00 C2 3H08 D4 3H16 D4 3H45 G1 3H74 A7 3H85 E1 3H94 H7 3Q11 A4 3Q17 G10 3Q23 G10 3Q32 B3 6H00 H7 6H05-2 G12 9H01 G7 9H08 C2 9H15 F4 9Q13 D12 9Q21 E11 FH12 H7 FQ04 G14 IH15 H1 IQ03 F10 IQ15 E12 IQ21 F13
1M17 G1 2H16 H2 3H01 C1 3H09 D2 3H17 A4 3H46 H2 3H75 A3 3H95 H7 3Q12 B4 3Q18 G10 3Q24 D10 6H01 D1 6H06-1 G12 9H03 B4 9H10 F2 9H16 B4 9Q14-1 F11 9Q23 F13 FH13 G1 FQ05 G14 IH16 H1 IQ04 F10 IQ16 E12
2H06 H8 2H17 H2 3H02 C2 3H10 D2 3H31 E1 3H47 H2 3H79 A7 3H87 E2 3H97 D1 3Q13 B4 3Q19 G11 3Q26 B12 5H01 F11 6H03 D1 6H06-2 F13 9H04 C2 9H11 F2 9Q05 E11 9Q14-2 E11 9Q24 F11 FQ00 F14 FQ06 G14 IH17 G7 IQ05 F10 IQ17 E13
2H07 H8 2Q67 D11 3H03 D4 3H11 A4 3H42 G1 3H70 E8 3H82 A3 3H88 E8 3H98 B4 3Q14 B4 3Q20 F10 3Q27 C2 5H02 G11 6H04-1 B2 7Q01 E12 9H05 F4 9H12 F4 9Q06 E13 9Q14-3 E11 9Q26 D13 FQ01 F14 IH09 D2 IH18 G7 IQ06 G10 IQ18 E12
2H08 A2 2Q69 E14 3H04 D4 3H13 D2 3H43 G2 3H72 D7 3H83 E2 3H90 C1 3H99 B4 3Q15 B4 3Q21 F10 3Q28 B12 5H03 E13 6H04-2 B2 7V00-5 A5 9H06 E4 9H13 F4 9Q07 E13 9Q16 E11 FH10 A7 FQ02 F14 IH10 G7 IH19 G7 IQ13 D12 IQ19 F12

Small Signal Board: Viper: DDR SDRAM

B6B VIPER: DDR SDRAM B6B

VTT-TERM-DDR

RES

7V00-2 VIPER REV C

DDR INTERFACE

MM_A0 MM_A1 MM_A2 MM_A3 MM_A4 MM_A5 MM_A6 MM_A7 MM_A8 MM_A9 MM_A10 MM_A11 MM_A12

MM_BA0 MM_BA1

MM_CS0

MM_DQM_0 MM_DQM_1 MM_DQM_2 MM_DQM_3

MM_DQS0 MM_DQS1 MM_DQS2 MM_DQS3

MM_RAS MM_CAS MM_WE

MM_CKE MM_CLK_N MM_CLK_P

VREF-DDR 2V02 100n C12

MM_AVREF

MM_ADDR0 MM_ADDR1 MM_ADDR2 MM_ADDR3 MM_ADDR4 MM_ADDR5 MM_ADDR6 MM_ADDR7 MM_ADDR8 MM_ADDR9 MM_ADDR10 MM_ADDR11 MM_ADDR12

MM_DATA0 MM_DATA1 MM_DATA2 MM_DATA3 MM_DATA4 MM_DATA5 MM_DATA6 MM_DATA7 MM_DATA8 MM_DATA9 MM_DATA10 MM_DATA11 MM_DATA12 MM_DATA13 MM_DATA14 MM_DATA15 MM_DATA16 MM_DATA17 MM_DATA18 MM_DATA19 MM_DATA20 MM_DATA21 MM_DATA22 MM_DATA23 MM_DATA24 MM_DATA25 MM_DATA26 MM_DATA27 MM_DATA28 MM_DATA29 MM_DATA30 MM_DATA31

MM_DATA_0 MM_DATA_1 MM_DATA_2 MM_DATA_3 MM_DATA_4 MM_DATA_5 MM_DATA_6 MM_DATA_7 MM_DATA_8 MM_DATA_9 MM_DATA_10 MM_DATA_11 MM_DATA_12 MM_DATA_13 MM_DATA_14 MM_DATA_15 MM_DATA_16 MM_DATA_17 MM_DATA_18 MM_DATA_19 MM_DATA_20 MM_DATA_21 MM_DATA_22 MM_DATA_23 MM_DATA_24 MM_DATA_25 MM_DATA_26 MM_DATA_27 MM_DATA_28 MM_DATA_29 MM_DATA_30 MM_DATA_31

100R 3V44 3V78 1K0

MM_A12

+2V5D-DDR +2V5D-DDR VREF-DDR 2V00 100n

7V01 ★ K4D261638F-LC40

DDR SDRAM 128Mx16 — DDR SDRAM 1

MM_DQS0 MM_DQS1

MM_DATA_0 MM_DATA_1 MM_DATA_2 MM_DATA_3 MM_DATA_4 MM_DATA_5 MM_DATA_6 MM_DATA_7 MM_DATA_8 MM_DATA_9 MM_DATA_10 MM_DATA_11 MM_DATA_12 MM_DATA_13 MM_DATA_14 MM_DATA_15

MM_DATA_16 MM_DATA_17 MM_DATA_18 MM_DATA_19 MM_DATA_20 MM_DATA_21 MM_DATA_22 MM_DATA_23 MM_DATA_24 MM_DATA_25 MM_DATA_26 MM_DATA_27 MM_DATA_28 MM_DATA_29 MM_DATA_30 MM_DATA_31

MM_DQS2 MM_DQS3

VREF-DDR 2V01 100n

7V02 ★ K4D261638F-LC40

DDR SDRAM 128Mx16 — DDR SDRAM 2

MM_A12

+2V5D-DDR +2V5D-DDR VREF-DDR

MM_BA0 MM_BA1 MM_DQM_2 MM_DQM_3 VREF-DDR MM_CLK_N MM_CLK_P MM_CKE MM_CS0 MM_RAS MM_CAS MM_WE

DDR TERMINATION REGULATOR

RES

+2V5-VPR +2V5D-DDR +2V5-VPR

7V03 NE57814DD

100R 3V77 2V14 100n

2V03 100n 2V04 330u 6.3V

EXTREFIN VTTSENSE STANDBY VDD VSS VO GND_HS REFOUT VTT

1V5 FV00 2V15 22u 6.3V

3V73 10K 2V42 100n 3V80 10K 2V43 100n

VREF-DDR

RES

FV01 1V4 VTT-TERM-DDR

2V34 100n 2V05 22u 6.3V 2V06 100n 2V07 22u 6.3V 2V08 100n 2V09 22u 6.3V 2V10 100n 2V11 100n 2V12 100n 2V13 100n

+2V5D-DDR

2V16 100n 2V17 100n 2V18 100n 2V19 100n 2V20 100n 2V21 100n 2V22 100n 2V23 100n 2V24 100n 2V25 100n 2V26 100n 2V27 100n 2V28 100n 2V29 100n 2V30 100n 2V31 100n

+2V5D 5V00 5V01 IV01 +2V5D-DDR

2V35 100n 2V36 10u 2V37 100p

E_14700_019.eps 011004

8204 000 8235.6

2V00 C10 2V01 C12 2V02 D3 2V03 H8 2V04 H8 2V05 I8 2V06 I9 2V07 I9 2V08 I9 2V09 I9 2V10 I10 2V11 I10 2V12 I10 2V13 I10 2V14 I6 2V15 H8 2V16 H11 2V17 H11 2V18 H11 2V19 H11 2V20 H12 2V21 H12 2V22 H12 2V23 H12 2V24 H12 2V25 H13 2V26 H13 2V27 H13 2V28 H13 2V29 H14 2V30 H14 2V31 H14 2V32 H8 2V33 H8 2V34 I8 2V35 I1 2V36 I2 2V37 I2 3V00 D10 3V01 D12 3V02 D10 3V03 D12 3V04 E10 3V05 E12 3V06 E10 3V07 E12 3V08 E10 3V09 E12 3V10 E10 3V11 E12 3V12 E10 3V13 E12 3V14 E10 3V15 E12 3V16 E10 3V17 E12 3V18 E10 3V19 E12 3V20 E10 3V21 E12 3V22 E10 3V23 E12 3V24 D1 3V25 E1 3V26 D1 3V27 E1 3V28 D1 3V29 E1 3V30 D1 3V31 E1 3V32 E10 3V33 E12 3V34 E10 3V35 E12 3V36 E10 3V37 E12 3V38 E10 3V39 E12 3V40 F10 3V41 F12 3V42 F10 3V43 F12 3V44 F3 3V45 B2 3V46 B2 3V47 B3 3V48 B3 3V49 B3 3V50 B3 3V51 B3 3V52 B3 3V53 B3 3V54 B4 3V55 B4 3V56 B4 3V57 B4 3V58 B4 3V59 B4 3V60 B4 3V61 B5 3V62 B5 3V63 B5 3V64 B5 3V65 B5 3V66 B5 3V67 B5 3V68 B6 3V69 B6 3V70 B6 3V71 B6 3V72 B6 3V73 B6 3V74 B6 3V75 B7 3V76 B7 3V77 H6 3V78 F4 3V79 H8 3V80 H8 5V00 H2 5V01 I2 7V00-2 C5 7V01 D8 7V02 D14 7V03 H7 FV00 H8 FV01 I8 IV01 H2

Small Signal Board: Viper: Audio Video *I/O*

B6C VIPER: AUDIO VIDEO I/O

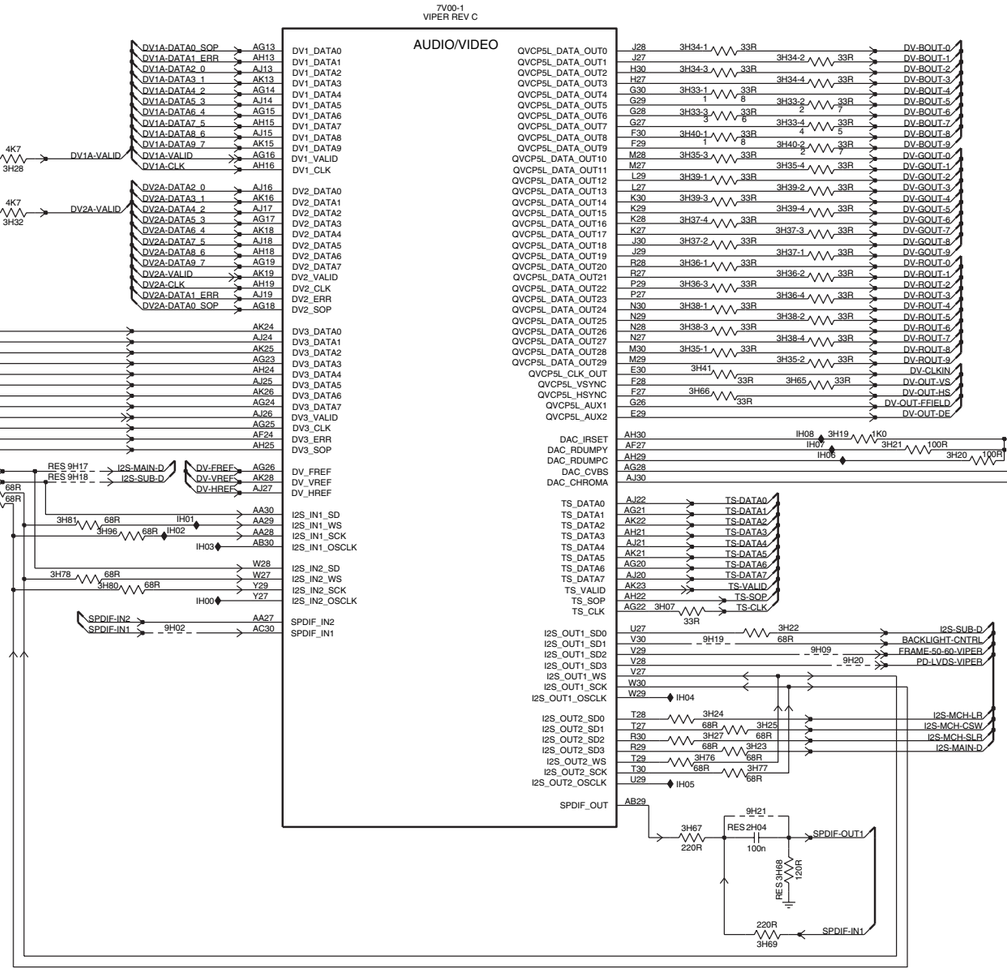

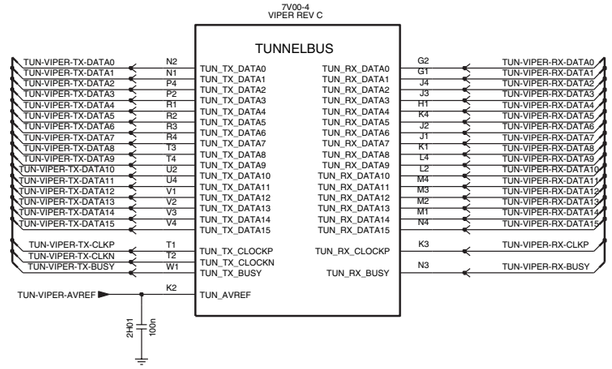

2H01 I11
2H04 G8
2H10 E12
2H11 E12
2H12 E12
2Q25 D12
2Q29 D12
2Q31 D12
3H07 E7
3H12 E3
3H14 E3
3H18 C3
3H19 D9
3H20 D9
3H21 D9
3H22 F8
3H23 F8
3H24 F8
3H25 F8
3H27 F8
3H28 B3
3H32 C3
3H33-1 B8
3H33-2 B8
3H33-3 B8
3H33-4 B8
3H34-1 B8
3H34-2 B8
3H34-3 B8
3H34-4 B8
3H35-1 D8
3H35-2 D8
3H35-3 B8
3H35-4 B8
3H36-1 C8
3H36-2 C8
3H36-3 C8
3H36-4 C8
3H37-1 C8
3H37-2 C8
3H37-3 C8
3H37-4 C8
3H38-1 C8
3H38-2 C8
3H38-3 D8
3H38-4 D8
3H39-1 C8
3H39-2 C8
3H39-3 C8
3H39-4 C8
3H40-1 B8
3H40-2 B8
3H41 D8
3H65 D8
3H66 D8
3H67 G8
3H68 G8
3H69 H8
3H76 F8
3H77 F8
3H78 E3
3H80 E4
3H81 E3
3H91 E11
3H92 E11
3H96 E4
3Q00 D11
3Q01 E11
3Q03 D11
3Q06 D11
5H05 D12
5Q05 C12
7V00-1 A6
7V00-4 F12
9H02 F4
9H09 F8
9H17 D4
9H18 E4
9H19 F8
9H20 F9
9H21 G8
IH00 E4
IH01 E4
IH02 E4
IH03 E4
IH04 F8
IH05 G8
IH06 D9
IH07 D8
IH08 D8
IH12 E11
IH13 E12
IH14 E13
IQ00 D11
IQ01 D12
IQ02 D13

E_14700_020.eps
011004

Small Signal Board: Viper: Supply

0Q00 A10 0Q02 A12 0Q03 A13 | 0Q04 A13 0Q05 A14 0Q06 A12 | 0Q07 A11 0Q08 A11 2Q00 B9 | 2Q01 B10 2Q02 B10 2Q03 B10 | 2Q04 B11 2Q05 B11 2Q06 B11 | 2Q07 B11 2Q08 B12 2Q09 B12 | 2Q10 B12 2Q11 B12 2Q12 B13 | 2Q13 B13 2Q14 B13 2Q15 B13 | 2Q16 B14 2Q17 B14 2Q18 B14 | 2Q19 B14 2Q20 D9 2Q21 D10 | 2Q22 D10 2Q23 D10 2Q24 D11 | 2Q26 D11 2Q27 D11 2Q28 D11 | 2Q30 D12 2Q32 D12 2Q33 D12 | 2Q34 D13 2Q35 D13 2Q37 D13 | 2Q38 D13 2Q39 D14 2Q40 C9 | 2Q41 C10 2Q42 C10 2Q43 C10 | 2Q44 C11 2Q45 C11 2Q46 C11 | 2Q47 C11 2Q48 C12 2Q49 C12 | 2Q50 C12 2Q51 C12 2Q52 C13 | 2Q53 C13 2Q54 C13 2Q55 C13 | 2Q56 C14 2Q57 C14 2Q58 C14 | 2Q59 C14 2Q63 B8 2Q64 B8 | 2Q65 B9 2Q66 B9 2Q71 E4 | 2Q72 E5 2Q73 E5 5Q01 A8 | 5Q02 A8 5Q03 A9 5Q04 A9 | 5Q06 E4 5Q07 E4 7V00-3 B1 | IQ07 B9 IQ08 B9 IQ09 B8 | IQ10 B8 IQ22 E5

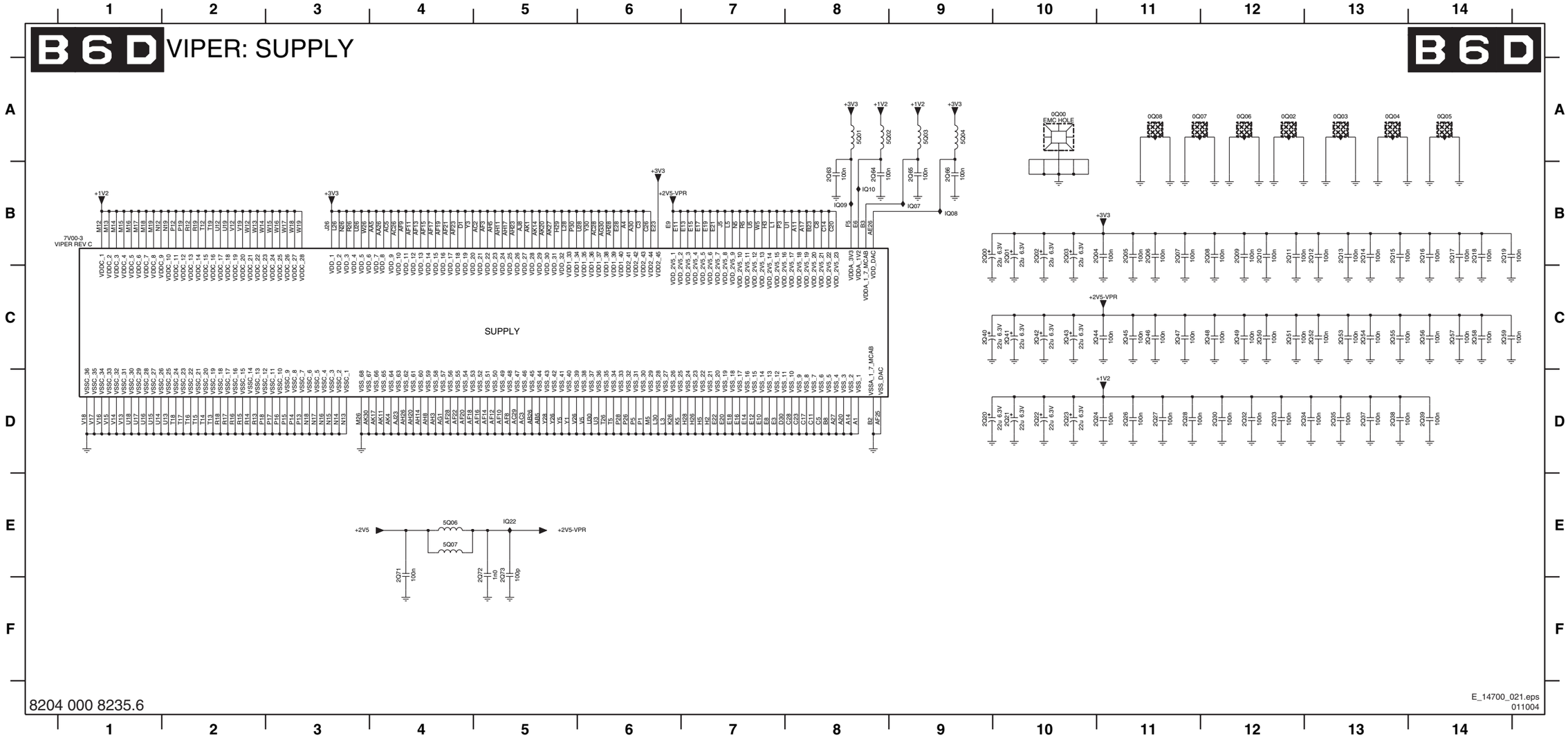

E_14700_021.eps
011004

Small Signal Board: Viper: Debug

B6E

VIPER : DEBUG
(FOR FACTORY USE ONLY)

B6E

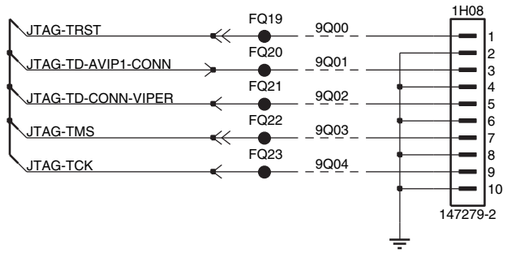

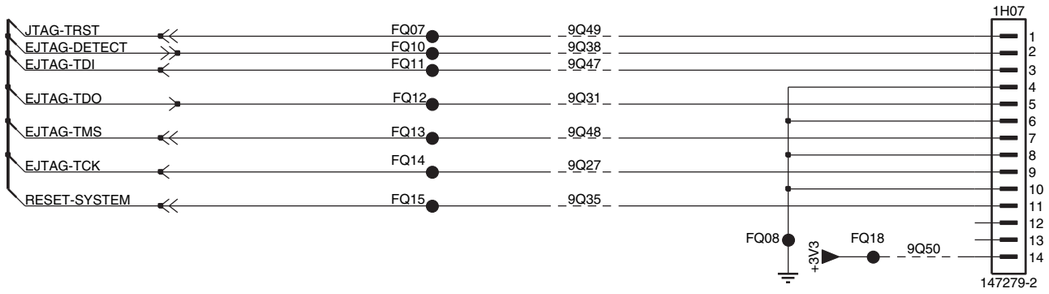

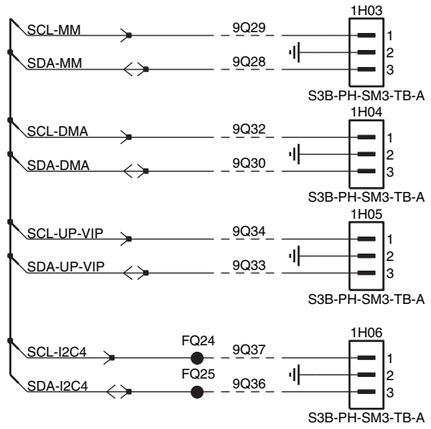

1H03 B8
1H04 C8
1H05 C8
1H06 D8
1H07 C6
1H08 A6
9Q00 A5
9Q01 A5
9Q02 A5
9Q03 A5
9Q04 B5
9Q27 C4
9Q28 B7
9Q29 B7
9Q30 C7
9Q31 C4
9Q32 C7
9Q33 C7
9Q34 C7
9Q35 D4
9Q36 D7
9Q37 D7
9Q38 C4
9Q47 C4
9Q48 C4
9Q49 C4
9Q50 D5
FQ07 C3
FQ08 D5
FQ10 C3
FQ11 C3
FQ12 C3
FQ13 C3
FQ14 C3
FQ15 D3
FQ18 D5
FQ19 A5
FQ20 A5
FQ21 A5
FQ22 A5
FQ23 B5
FQ24 D7
FQ25 D7

8204 000 8235.6

E_14700_022.eps
011004

Small Signal Board: Standby Controller

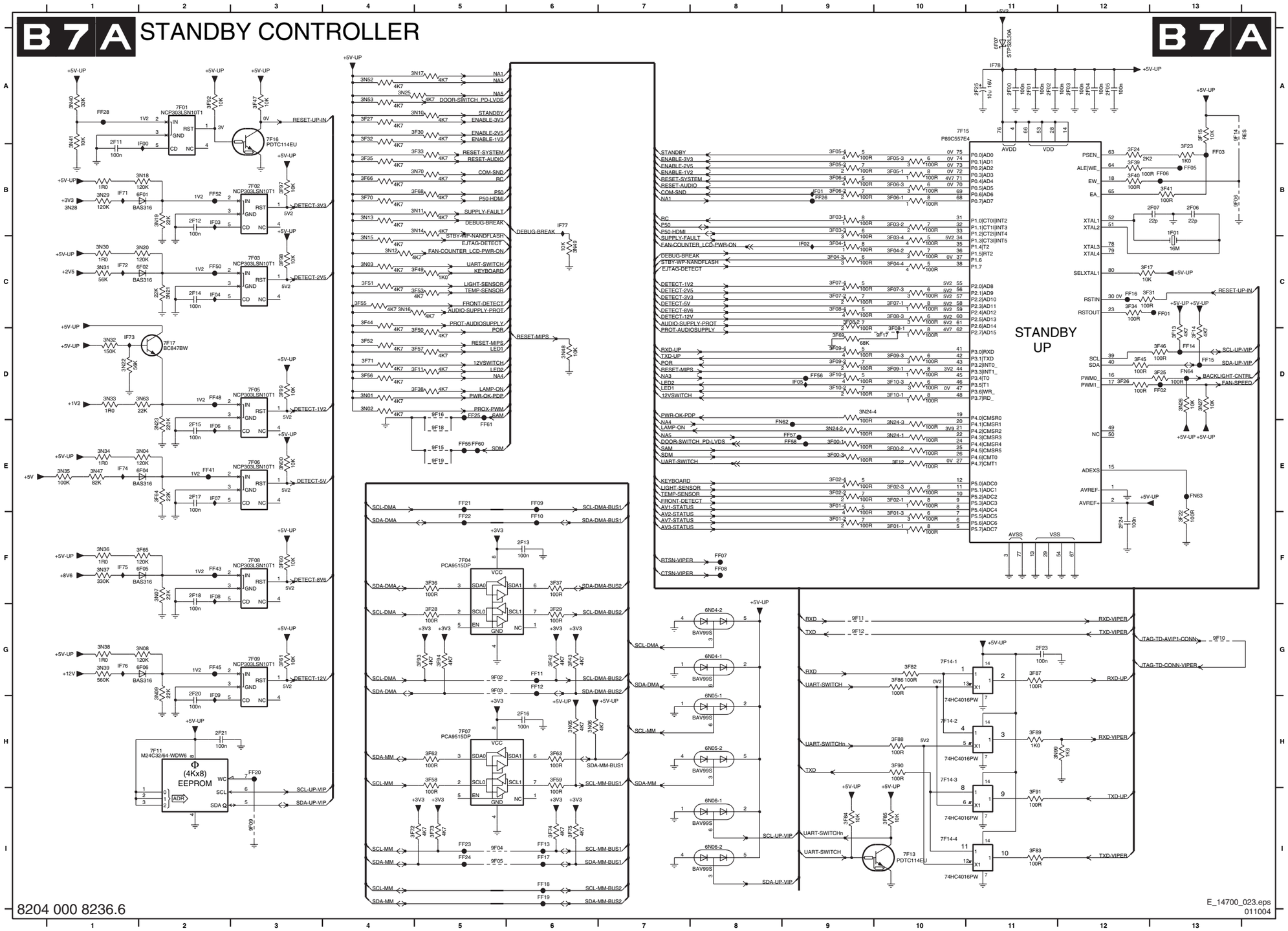

1F01 B13	3F44 C4	3N52 A4	IF02 C9
2F00 A11	3F45 D12	3N53 A4	IF03 B2
2F01 A11	3F46 D13	3N63 D2	IF04 C2
2F02 A11	3F47 A3	3N70 B5	IF05 D9
2F03 A12	3F49 C5	3N99 H11	IF06 E2
2F04 A12	3F50 D5	6F01 B2	IF07 E2
2F05 A12	3F51 C4	6F02 C2	IF08 F2
2F06 B13	3F52 D4	6F04 E2	IF09 G2
2F07 B13	3F53 C5	6F05 F2	IF71 B1
2F11 A1	3F55 C4	6F06 G2	IF72 C1
2F12 B2	3F56 D4	6F07 A11	IF73 D1
2F13 F6	3F57 D5	6N04-1 G8	IF74 E1
2F14 C2	3F58 H5	6N04-2 G8	IF75 F1
2F15 E2	3F59 H6	6N05-1 H8	IF76 G1
2F16 H6	3F60 F3	6N05-2 H8	IF77 B6
2F17 E2	3F61 G3	6N06-1 I8	IF78 A11
2F18 F2	3F62 H5	6N06-2 I8	
2F20 G2	3F63 H6	7F01 A2	
2F21 H2	3F64 E2	7F02 B3	
2F23 G11	3F65 F2	7F03 C3	
2F24 F12	3F66 B4	7F04 F5	
2F25 A11	3F68 B5	7F05 D3	
3F00-1 E9	3F69 D9	7F06 E3	
3F00-2 E10	3F70 B4	7F07 H5	
3F00-3 E9	3F71 D4	7F08 F3	
3F01-1 F10	3F72 I4	7F09 G3	
3F01-2 F9	3F73 I5	7F11 H2	
3F01-3 F10	3F74 I6	7F13 I10	
3F01-4 E9	3F75 I6	7F14-1 G10	
3F02-1 E10	3F82 G10	7F14-2 H10	
3F02-2 E9	3F83 I11	7F14-3 H10	
3F02-3 E10	3F84 I9	7F14-4 I10	
3F02-4 E9	3F85 I10	7F15 A11	
3F03-1 B9	3F86 G10	7F16 A3	
3F03-2 B10	3F87 G11	7F17 D2	
3F03-3 B9	3F88 H10	9F02 G5	
3F03-4 C10	3F89 H11	9F03 G5	
3F04-1 C9	3F90 H10	9F04 I5	
3F04-2 C10	3F91 I11	9F05 I5	
3F04-3 C9	3F92 A2	9F06 B13	
3F04-4 C10	3F93 G5	9F09 I3	
3F05-1 B10	3F94 G5	9F10 G13	
3F05-2 B9	3F97 B3	9F11 G9	
3F05-3 B10	3F98 C3	9F12 G9	
3F05-4 B9	3F99 D3	9F14 A13	
3F06-1 B10	3N00 E3	9F15 E5	
3F06-2 B9	3N01 D4	9F16 D5	
3F06-3 B10	3N02 D4	9F17 D10	
3F06-4 B9	3N03 C4	9F18 E5	
3F07-1 C10	3N04 E2	9F19 E5	
3F07-2 C9	3N05 H6	FF01 C13	
3F07-3 C10	3N06 H6	FF02 D13	
3F07-4 C9	3N07 F2	FF03 B13	
3F08-1 D10	3N08 G2	FF05 B13	
3F08-2 C9	3N09 G2	FF06 B13	
3F08-3 C10	3N10 A5	FF07 F8	
3F08-4 C9	3N11 B5	FF08 F8	
3F09-1 D10	3N12 C4	FF09 E6	
3F09-2 D9	3N13 B4	FF10 F6	
3F09-3 D10	3N14 B5	FF11 G6	
3F09-4 D9	3N15 C4	FF12 G6	
3F10-1 D10	3N16 C4	FF13 I6	
3F10-2 D9	3N17 A5	FF14 D13	
3F10-3 D10	3N18 B2	FF15 D13	
3F10-4 D9	3N19 B2	FF16 C12	
3F11 D5	3N20 C2	FF17 I6	
3F12 E10	3N21 C2	FF18 I6	
3F13 D13	3N22 D1	FF19 I6	
3F14 D13	3N23 E2	FF20 H3	
3F15 A13	3N24-1 E10	FF21 E5	
3F17 C12	3N24-2 E9	FF22 F5	
3F22 F13	3N24-3 E10	FF23 I5	
3F23 B13	3N24-4 D9	FF24 I5	
3F24 B12	3N25 A4	FF25 D5	
3F25 D13	3N26 D13	FF26 B9	
3F26 D12	3N27 D13	FF28 A1	
3F27 A4	3N28 B1	FF41 E2	
3F28 G5	3N29 B1	FF43 F2	
3F29 G6	3N30 C1	FF45 G2	
3F30 A5	3N31 C1	FF48 D2	
3F31 C12	3N32 D1	FF50 C2	
3F32 A4	3N33 D1	FF52 B2	
3F33 B5	3N34 E1	FF55 E5	
3F34 C12	3N35 E1	FF56 D9	
3F35 B4	3N36 F1	FF57 E9	
3F36 F5	3N37 F1	FF58 E9	
3F37 F6	3N38 G1	FF60 E5	
3F38 D5	3N39 G1	FF61 E5	
3F39 B12	3N40 A1	FN62 E8	
3F40 B12	3N41 A1	FN63 E13	
3F41 B13	3N47 E1	FN64 D13	
3F42 G6	3N48 D6	IF00 A2	
3F43 G6	3N49 C6	IF01 B9	

Small Signal Board: NAND Flash

B 7 B NAND FLASH

B 7 B

+3V3
5N01
+3V3-NAND
7N50
74LVC245APW
2N23
22n
PCI-CBE2
XIO-SEL0
PCI-AD24
PCI-AD16
PCI-AD25
PCI-AD17
PCI-AD26
PCI-AD18
PCI-AD27
PCI-AD19
NAND-AD(0)
NAND-D(8)
NAND-AD(1)
NAND-D(9)
NAND-AD(2)
NAND-D(10)
NAND-AD(3)
NAND-D(11)
+3V3-NAND
2N33
22n
7N52
74LVC245APW
PCI-CBE2
XIO-SEL0
PCI-AD28
PCI-AD20
PCI-AD29
PCI-AD21
PCI-AD30
PCI-AD22
PCI-AD31
PCI-AD23
NAND-AD(4)
NAND-D(12)
NAND-AD(5)
NAND-D(13)
NAND-AD(6)
NAND-D(14)
NAND-AD(7)
NAND-D(15)
+3V3-NAND
2N34
22n
+3V3
3N71
4K7
7N51
74LVC245APW
XIO-SEL0
PCI-CBE2
PCI-AD0
PCI-AD1
PCI-CBE1
NAND_RE_N
NAND_CLE
NAND_ALE
NAND_WE_N
+3V3-NAND
2N32
22n
2N31
22n
7N53
TC58DVM72F1TGI0
EEPROM
(8Mx16)
NAND-AD(0)
NAND-AD(1)
NAND-AD(2)
NAND-AD(3)
NAND-AD(4)
NAND-AD(5)
NAND-AD(6)
NAND-AD(7)
NAND-D(8)
NAND-D(9)
NAND-D(10)
NAND-D(11)
NAND-D(12)
NAND-D(13)
NAND-D(14)
NAND-D(15)
RE
CE
CLE
ALE
WE
WP
RY
BY
NAND_RE_N
XIO-SEL0
NAND_CLE
NAND_ALE
NAND_WE_N
XIO-ACK
IF60
FF27
NC
VSS
GND
3N72
4K7
9N02
3N45
10K
+5V-UP
7N19
PDTC114EU
3V6
0V2
STBY-WP-NANDFLASH
22K
3N46
IN01
5N10
+8V6
3N56
82K
3N57
1K0
3N58
33R
2N40
100n
2N41
10u 20V
8V6
IN02
BC847BPN
7N01-2
7V9
2N42
1u0
2N43
1u0
IN03
7N01-1
BC847BPN
3V1
IN04
4V6
Y-CVBS-MON-OUT
IN05
2V5
330R
3N59
DAC-CVBS
3N60
47K
3N61
33R
3N62
10K
RES
PCI-CLOCK
+3V3
5N02
2N35
22n
2N36
10V 10u
7N54
CY2305SC-1
ZERO
DELAY
BUFFER
VDD
REF
CLK
CLKOUT
GND
3N65
33R
3N66
33R
3N67
33R
3N68
33R
3N64
33R
RES
FF31
FF32
FF33
FF34
FF30
PCI-CLK-USB20
PCI-CLK-IEEE1394
PCI-CLK-VPR
PCI-CLK-SLOT
PCI-CLK-ETHERNET
9N00
3N69
33R
PLL-OUT
3N54-2
3N54-3
3N54-4
3N54-1
4K7
PCI-FRAME
PCI-TRDY
PCI-IRDY
PCI-DEVSEL
3N55-4
3N55-1
3N55-3
3N55-2
PCI-STOP
PCI-PERR
PCI-SERR

2N23 B2
2N31 B5
2N32 B5
2N33 C2
2N34 G2
2N35 F8
2N36 F8
2N40 B9
2N41 B9
2N42 B7
2N43 B7
3N45 D7
3N46 E6
3N50 C6
3N51 C6
3N54-1 E9
3N54-2 D9
3N54-3 D9
3N54-4 E9
3N55-1 E9
3N55-2 E9
3N55-3 E9
3N55-4 E9
3N56 B7
3N57 B8
3N58 B8
3N59 C8
3N60 C7
3N61 C8
3N62 C8
3N64 G9
3N65 F9
3N66 F9
3N67 G9
3N68 G9
3N69 G8
3N71 G1
3N72 E5
5N01 A2
5N02 E8
5N10 A9
7N01-1 B8
7N01-2 B8
7N19 D7
7N50 B1
7N51 G2
7N52 D2
7N53 B4
7N54 F8
9N00 G8
9N02 D6
FF27 D6
FF30 G9
FF31 F9
FF32 F9
FF33 F9
FF34 G9
IF60 C6
IN01 A8
IN02 B8
IN03 B7
IN04 B8
IN05 B8

8204 000 8236.6

E_14700_024.eps
300904

Small Signal Board: Supply Audio + Antiplop

2N20 C6	2N62 C4	2N68 B2	2N73 E3	3N74 C6	3N79 D9	3N94 D1	6N02 B6	7N56-1 C7	7N61-2 E2	9N04 B8	9N63 B1	9N68 E1	FF53 C3	IF13 C7	IF18 D8	IF53 C1	IF58 E1
2N21 D8	2N63 D2	2N69 D2	3N42 B1	3N75 C7	3N80 D9	3N95 D2	6N03 D8	7N56-2 C8	7N70 B2	9N05 B8	9N64 B1	9N69 E1	FF54 E3	IF14 C6	IF19 D9	IF54 C2	IF59 E1
2N22 D8	2N64 D3	2N70 E2	3N43 D1	3N76 C6	3N90 A2	3N96 E1	6N60 E1	7N60-1 B4	7N71 C2	9N60 A2	9N65 D1	FF29 C3	IF10 B7	IF15 C8	IF50 A1	IF55 D1	
2N60 B2	2N65 E2	2N71 B3	3N44 E1	3N77 C7	3N92 B1	3N97 C2	7N55-1 D6	7N60-2 B2	7N72 E2	9N61 C2	9N66 D1	FF49 B4	IF11 C7	IF16 D7	IF51 B2	IF56 D1	
2N61 B3	2N66 E3	2N72 D3	3N73 C7	3N78 D8	3N93 C4	6N01 B5	7N55-2 C6	7N61-1 C2	9N03 C7	9N62 E2	9N67 B4	FF51 B3	IF12 C6	IF17 D9	IF52 B1	IF57 E2	

B 7 C SUPPLY AUDIO + ANTIPLOP

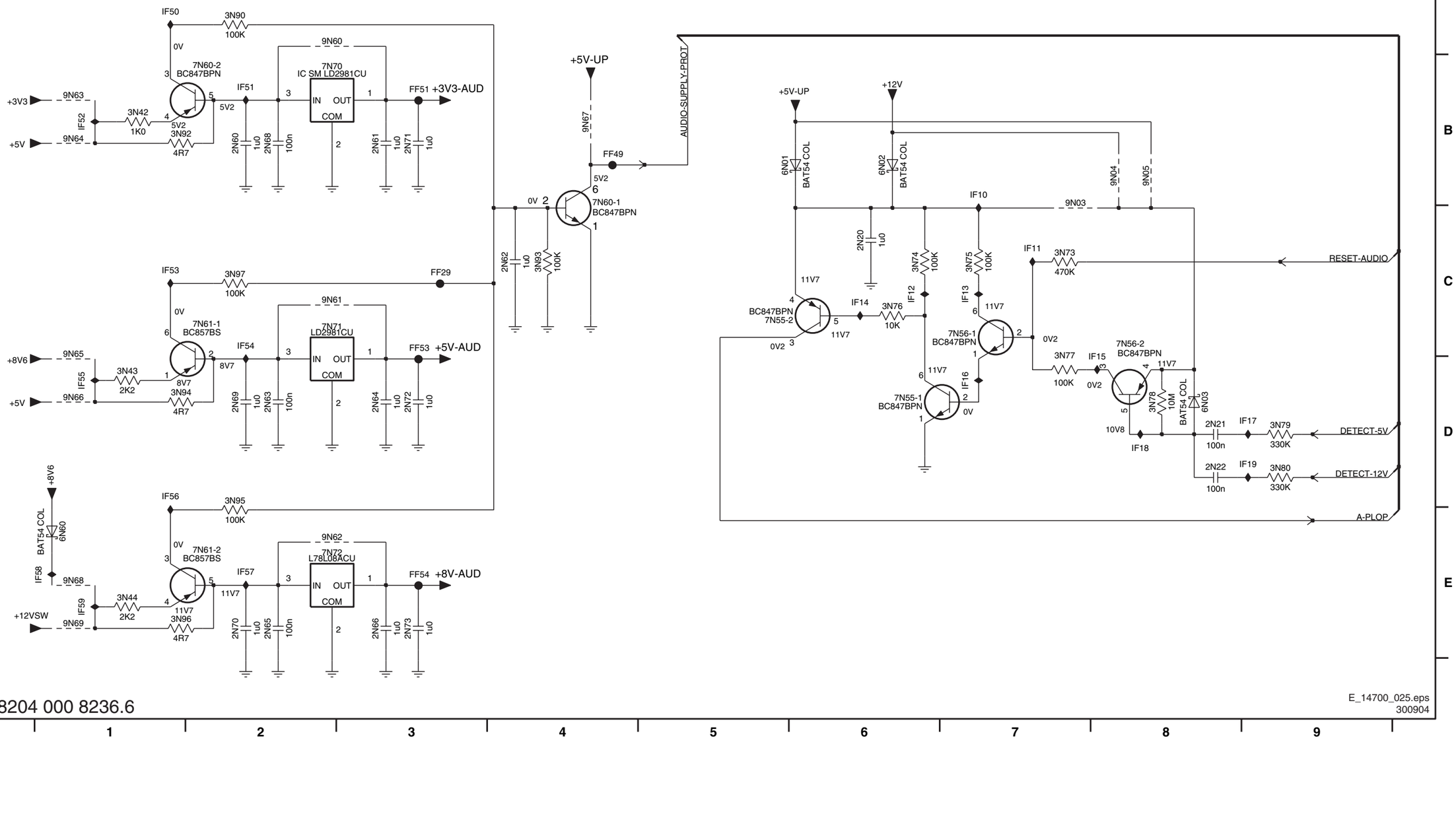

8204 000 8236.6

E_14700_025.eps
300904

Small Signal Board: Spider Tunnel Interface (Optional)

1R00-A A1	1R03 F13	2R16 C13	2R23 F11	3R03 E2	3R08 E1	3R13 F2	3R18 C9	3R23 D7	3R28 E7	3R33 F7	3R38 G7	3R44 F9	7R02 E10	9R12 G10	FR10 F12	IR02 F10	IR07 G10
1R00-B A4	2R00 D1	2R17 C13	2R24 F10	3R04 E1	3R09 F2	3R14 F1	3R19 B8	3R24 E6	3R29 E7	3R34 F7	3R40 D9	3R45 F12	9R04 D2	9R13 G10	FR11 F12	IR03 F10	IR08 G12
1R00-C A9	2R03 C10	2R20 E11	3R00 C3	3R05 E2	3R10 F1	3R15 F1	3R20 C5	3R25 E7	3R30 E6	3R35 F6	3R41 D9	3R46 G9	9R05 D2	FR01 C12	FR12 F12	IR04 F12	
1R00-D A6	2R13 C10	2R21 E10	3R01 B3	3R06 E1	3R11 F1	3R16 G1	3R21 D6	3R26 E7	3R31 F7	3R36 F6	3R42 F12	3R47 G12	9R10 F9	FR02 C12	FR13 G12	IR05 F10	
1R02 F13	2R14 C12	2R22 E11	3R02 E1	3R07 E1	3R12 F2	3R17 G1	3R22 D7	3R27 E6	3R32 F7	3R37 F7	3R43 F12	7R01 C11	9R11 F9	FR03 B4	IR01 F12	IR06 F12	

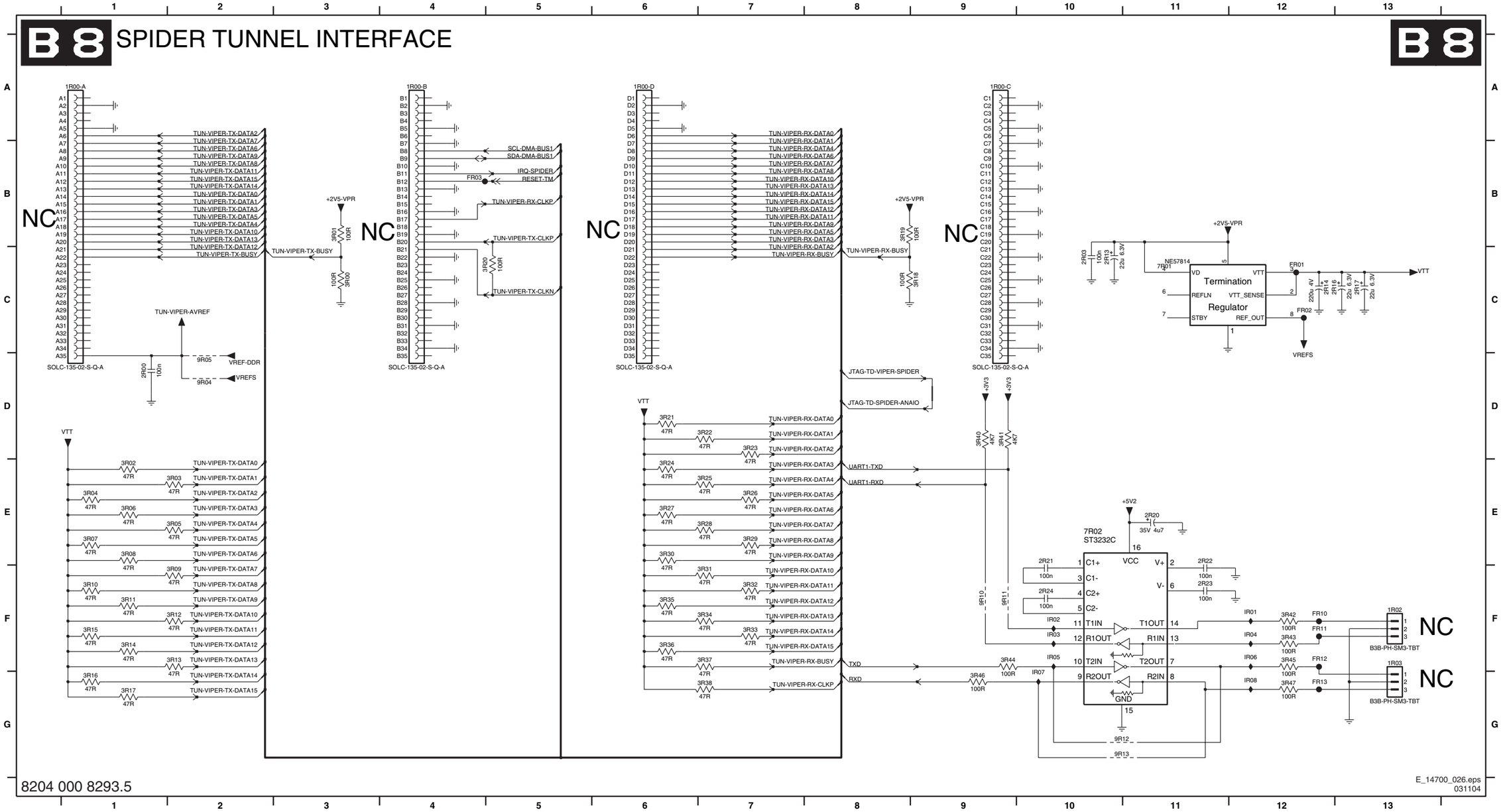

Small Signal Board: Display Interface: MOP (Optional)

B9A DISPLAY INTERFACE: MOP

RESET CIRCUIT

OUTPUT

INPUT

INPUT

OUTPUT

JTAG
(FOR FACTORY USE ONLY)

8204 000 8238.6

E_14700_027.eps
300904

1G00 A3
1G02 B12
2G00 A2
2G01 B2
2G02 B2
2G03 B2
2G04 B2
2G05 C1
2G06 C2
2G07 C2
2G08 C2
2G09 C2
2G10 C2
2G11 C3
2G12 C3
2G13 C1
2G14 C3
2G15 C1
2G16 E2
2G17 B2
2G18 B3
2G19 B3
2G20 A3
2G32 B1
2G33 A5
2G34 D6
3G00 A6
3G01 A9
3G02 A9
3G03 A9
3G04 C10
3G05 A10
3G06 B7
3G07 B7
3G08 B7
3G09 C9
3G10 B11
3G11 B11
3G12 B11
3G13 B11
3G15 C1
3G16 C2
3G17 G8
3G18 D1
3G21 C10
3G24 E6
3G25 H1
3G26 H1
3G27 E6
3G28 E6
3G29 E6
3G58 D10
5G00 B1
5G01 B1
5G03 A3
6D00 D1
6G05 C11
7G00-1 A8
7G00-2 G3
7G00-3 G13
7G00-4 G10
7G00-5 G6
7G00-6 E3
7G01 A6
7G02 C2
7G03-1 D2
7G03-2 D3
7G05 E5
7G21 C10
9G00 A14
9G01 A14
9G02 A14
9G03 A14
9G04 A3
9G05 A3
9G06 A14
FG00 A3
FG01 B2
FG02 B12
FG03 B13
FG04 B12
FG05 B12
FG06 B3
FG07 B12
FG08 C3
FG15 D1
FG16 E2
FG17 A13
FG18 B5
FG19 B5
IG01 G12
IG02 G12
IG03 I2
IG04 D2
IG05 D2
IG08 G4

Small Signal Board: Display Interface: Bitswap (Optional)

2G35 B9 2G58 E3 2G59 D6 2G67 E5 2G69 E5 2G73 E6 3G38 C8 3G39 C8 3G53 E2 3G54 E4 3G55 E5 3G56 D6 6G07 E2 6G08 E4 7G09 E6 7G15 B8 9G07 E5 9G08 D5 9G09 E2 9G20 A2 9G21 A5 9G22 A2 9G23 A5 9G24 A2 9G25 A5 9G26 A2 9G27 A5 9G28 A2 9G29 A5 9G30 A2 9G31 A5 9G32 B2 9G33 A5 9G34 B2 9G35 B5 9G36 B2 9G37 B5 9G38 B2 9G39 B5 9G40 B2 9G41 B5 9G42 B2 9G43 B5 9G44 C2 9G45 B5 9G46 C2 9G47 B5 9G48 B8 9G49 C2 9G50 C8 9G51 C5 9G52 C8 9G53 C2 9G54 C5 9G55 C2 9G56 C5 9G57 C2 9G58 C5 9G59 C2 9G60 C5 9G61 D2 9G62 C5 9G63 D2 9G64 D5 9G65 D2 9G66 D5 9G67 D2 9G68 D5 9G69 D2 9G70 D5 9G71 D2 9G72 D2 9G73 D2 9G74 E2 9G75 E2 AG00 D3 FG67 C10 FG69 D3 FG70 D3 FG71 E3 FG72 E3

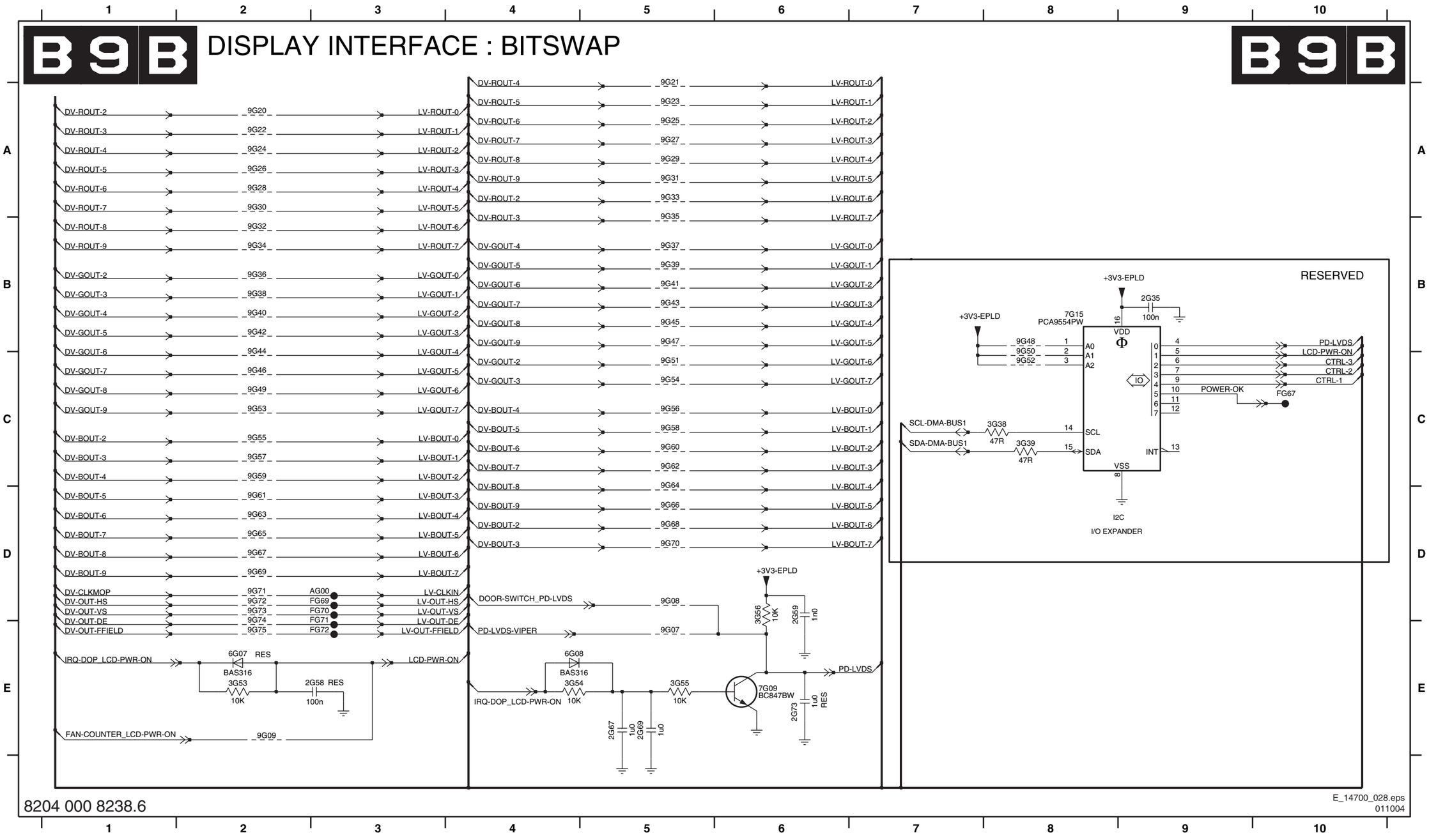

8204 000 8238.6

E_14700_028.eps
011004

Small Signal Board: Display Interface: Video DAC

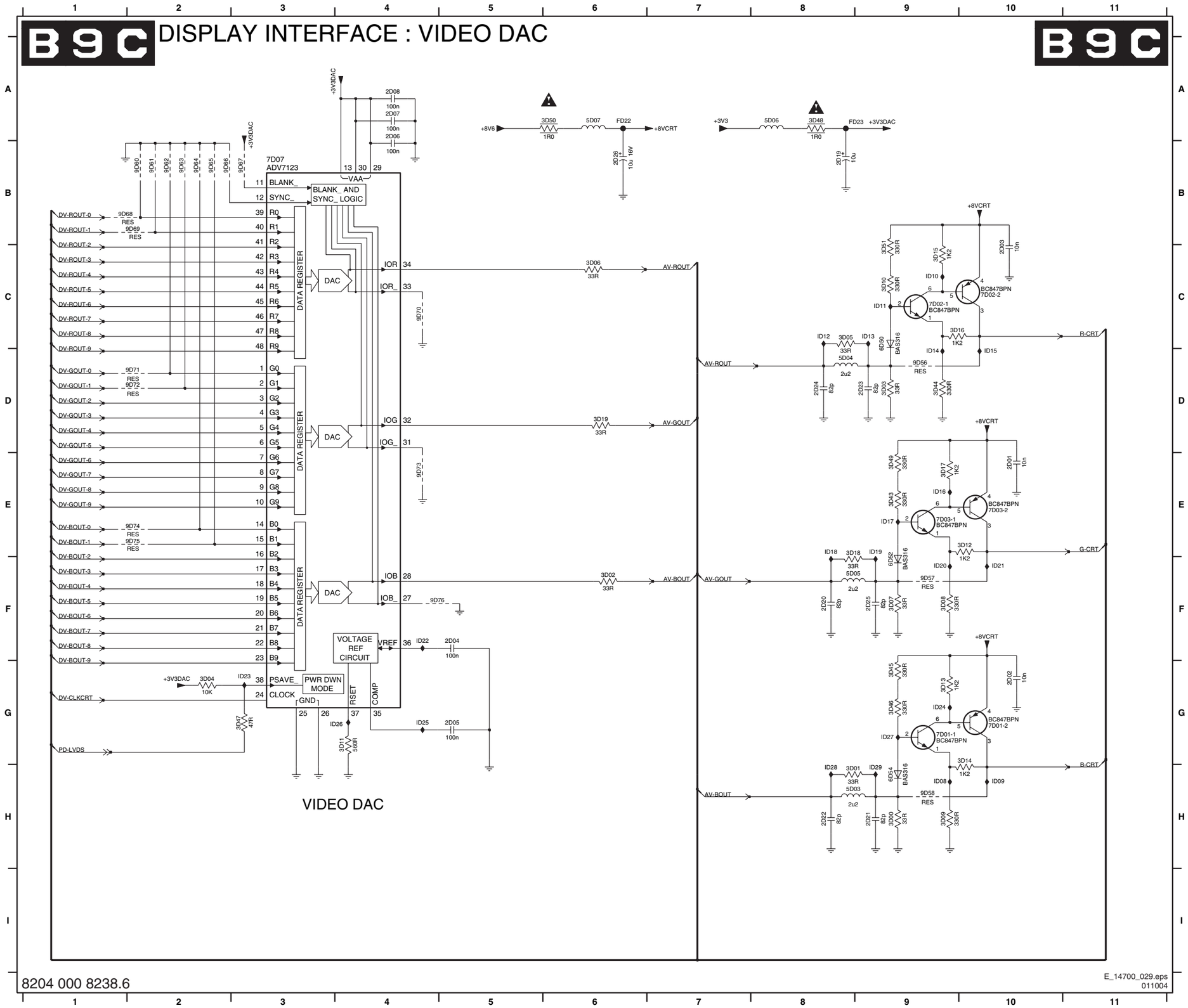

2D01 E10
2D02 G10
2D03 C10
2D04 F5
2D05 G5
2D06 A4
2D07 A4
2D08 A4
2D19 B8
2D20 F8
2D21 H9
2D22 H8
2D23 D9
2D24 D8
2D25 F9
2D26 B6
3D00 H9
3D01 H8
3D02 F6
3D03 D9
3D04 G2
3D05 C8
3D06 C6
3D07 F9
3D08 F9
3D09 H9
3D10 C9
3D11 G4
3D12 E10
3D13 G9
3D14 G10
3D15 C9
3D16 C9
3D17 E9
3D18 E8
3D19 D6
3D43 E9
3D44 D9
3D45 G9
3D46 G9
3D47 G3
3D48 A8
3D49 E9
3D50 A6
3D51 C9
5D03 H8
5D04 D8
5D05 F8
5D06 A8
5D07 A6
6D50 C9
6D52 F9
6D54 H9
7D01-1 G9
7D01-2 G10
7D02-1 C9
7D02-2 C10
7D03-1 E9
7D03-2 E10
7D07 B3
9D56 D9
9D57 F9
9D58 H9
9D60 B2
9D61 B2
9D62 B2
9D63 B2
9D64 B2
9D65 B2
9D66 B2
9D67 B3
9D68 B1
9D69 B2
9D70 C4
9D71 D2
9D72 D2
9D73 E4
9D74 E2
9D75 E2
9D76 F4
FD22 A6
FD23 A9
ID08 H9
ID09 H10
ID10 C9
ID11 C9
ID12 C8
ID13 C9
ID14 D9
ID15 D10
ID16 E9
ID17 E9
ID18 E8
ID19 E9
ID20 F9
ID21 F10
ID22 F4
ID23 G3
ID24 G9
ID25 G4
ID26 G4
ID27 G9
ID28 H8
ID29 H9

Small Signal Board: Display Interface: LVDS

B9D DISPLAY INTERFACE : LVDS

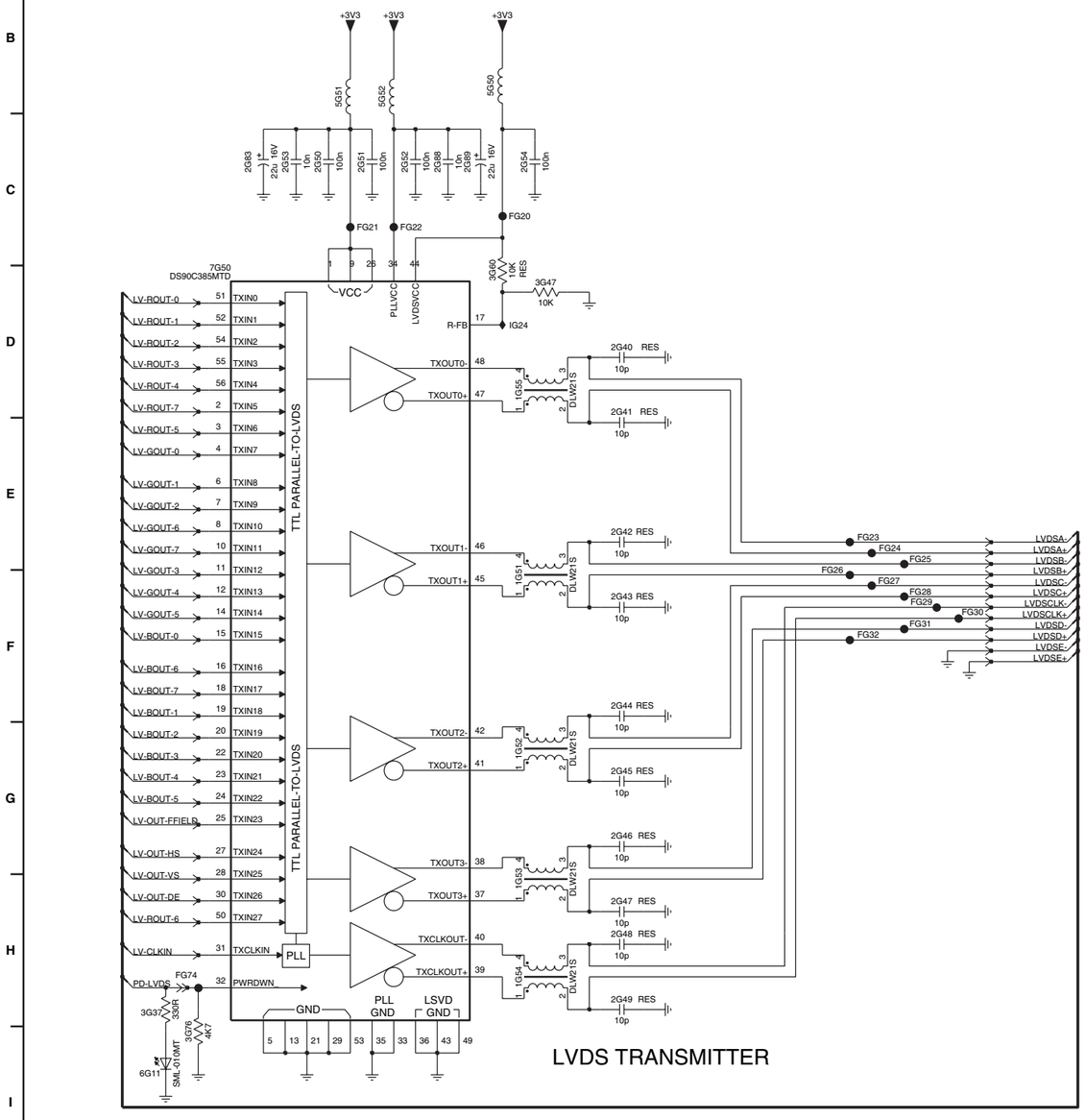

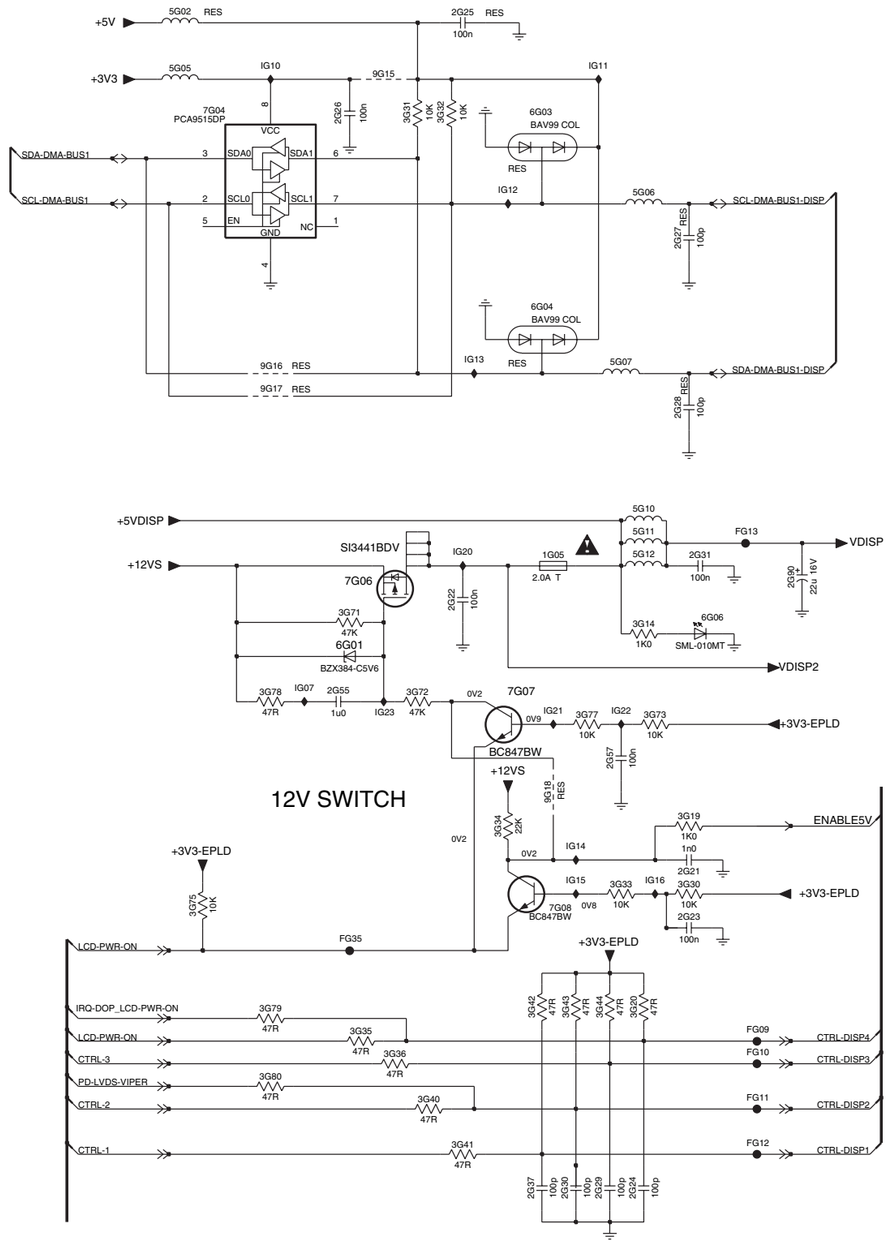

8204 000 8238.6

E_14700_030.eps
011004

1G05 E11 FG32 F6
1G51 F4 FG35 G10
1G52 G4 FG74 H1
1G53 H4 IG07 F10
1G54 H4 IG10 B9
1G55 D4 IG11 B11
2G21 G12 IG12 C11
2G22 E11 IG13 D11
2G23 G12 IG14 G11
2G24 I12 IG15 G11
2G25 A11 IG16 G12
2G26 B10 IG20 E11
2G27 C12 IG21 F11
2G28 D12 IG22 F12
2G29 I12 IG23 F10
2G30 I11 IG24 D4
2G31 E12
2G37 I11
2G40 D4
2G41 D4
2G42 E4
2G43 F4
2G44 F4
2G45 G4
2G46 G4
2G47 H4
2G48 H4
2G49 H4
2G50 C2
2G51 C3
2G52 C3
2G53 C2
2G54 C4
2G55 F10
2G57 F12
2G83 C2
2G88 C3
2G89 C3
2G90 E13
3G14 E12
3G19 G12
3G20 H12
3G30 G12
3G31 B10
3G32 B11
3G33 G12
3G34 G11
3G35 H10
3G36 H10
3G37 H1
3G40 H10
3G41 I11
3G42 H11
3G43 H11
3G44 H12
3G47 D4
3G60 D4
3G71 E10
3G72 F10
3G73 F12
3G75 G9
3G76 I2
3G77 F11
3G78 F9
3G79 H9
3G80 H9
5G02 A9
5G05 B9
5G06 C12
5G07 D12
5G10 E12
5G11 E12
5G12 E12
5G50 B3
5G51 B2
5G52 B3
6G01 E10
6G03 B11
6G04 C11
6G06 E12
6G11 I1
7G04 B9
7G06 E10
7G07 F11
7G08 G11
7G50 D2
9G15 B10
9G16 D9
9G17 D9
9G18 F11
FG09 H12
FG10 H12
FG11 H12
FG12 I12
FG13 E12
FG20 C4
FG21 C3
FG22 C3
FG23 E6
FG24 E6
FG25 E6
FG26 F6
FG27 F6
FG28 F6
FG29 F6
FG30 F7
FG31 F6

Small Signal Board: Display Interface: DVI Output (Optional)

B9E DISPLAY INTERFACE : DVI OUTPUT B9E

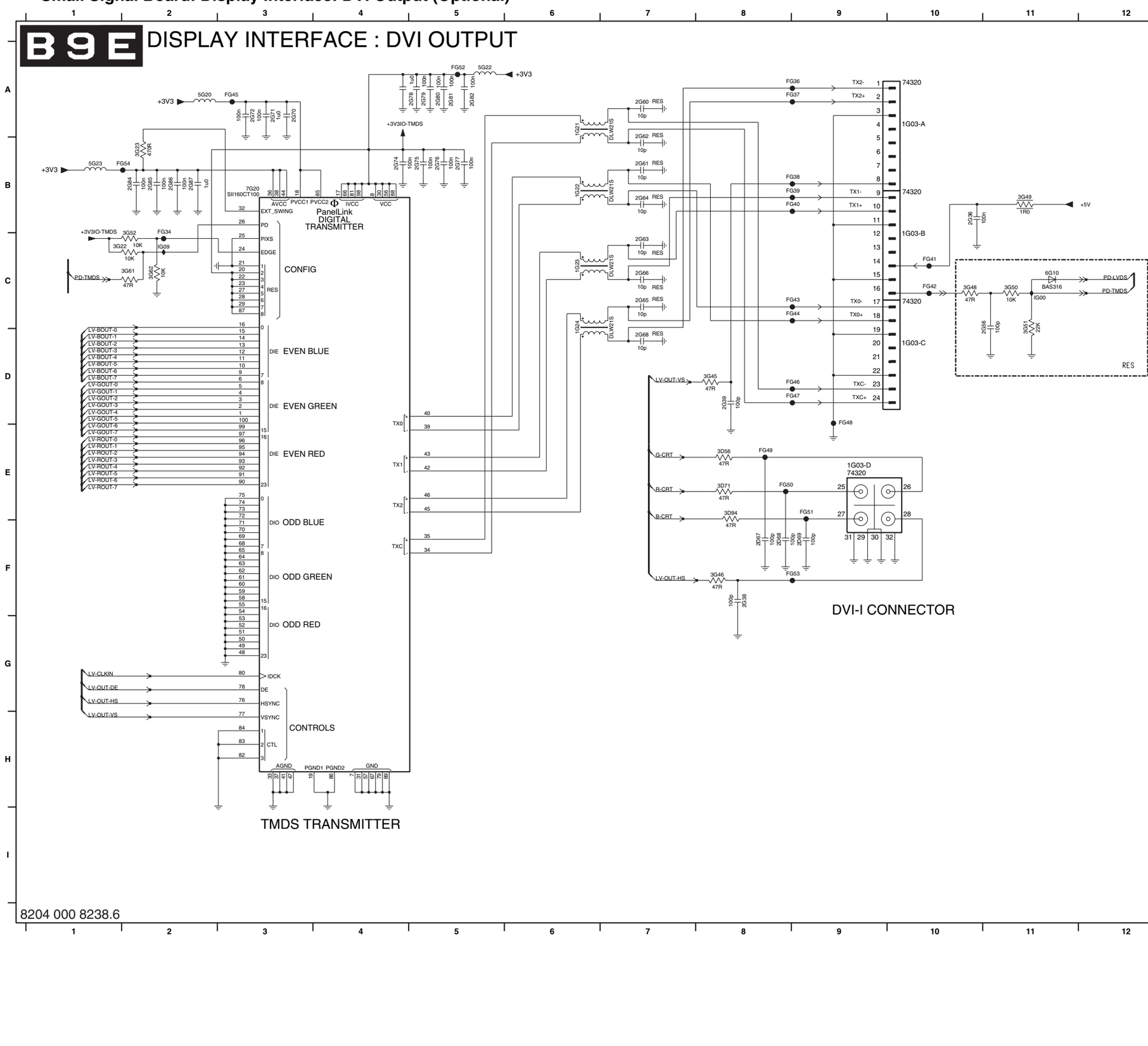

1G03-A A10
1G03-B C10
1G03-C D10
1G03-D E9
1G21 A6
1G22 B6
1G23 C6
1G24 C6
2D67 F8
2D68 F8
2D69 F9
2G36 B10
2G38 F8
2G39 D8
2G56 C11
2G60 A7
2G61 B7
2G62 B7
2G63 C7
2G64 B7
2G65 C7
2G66 C7
2G68 D7
2G70 A3
2G71 A3
2G72 A3
2G74 B4
2G75 B5
2G76 B5
2G77 B5
2G78 A5
2G79 A5
2G80 A5
2G81 A5
2G82 A5
2G84 B2
2G85 B2
2G86 B2
2G87 B2
3D56 E8
3D71 E8
3D94 E8
3G22 C1
3G23 B2
3G45 D8
3G46 F8
3G48 C10
3G49 B11
3G50 C11
3G51 C11
3G52 C2
3G61 C2
3G62 C2
5G20 A2
5G22 A5
5G23 B1
6G10 C11
7G20 B3
FG34 C2
FG36 A9
FG37 A9
FG38 B9
FG39 B9
FG40 B9
FG41 C10
FG42 C10
FG43 C9
FG44 C9
FG45 A3
FG46 D9
FG47 D9
FG48 E9
FG49 E8
FG50 E8
FG51 E9
FG52 A5
FG53 F9
FG54 B2
IG00 C11
IG09 C2

8204 000 8238.6

E_14700_031.eps
300904

Small Signal Board: LCD Power Supply

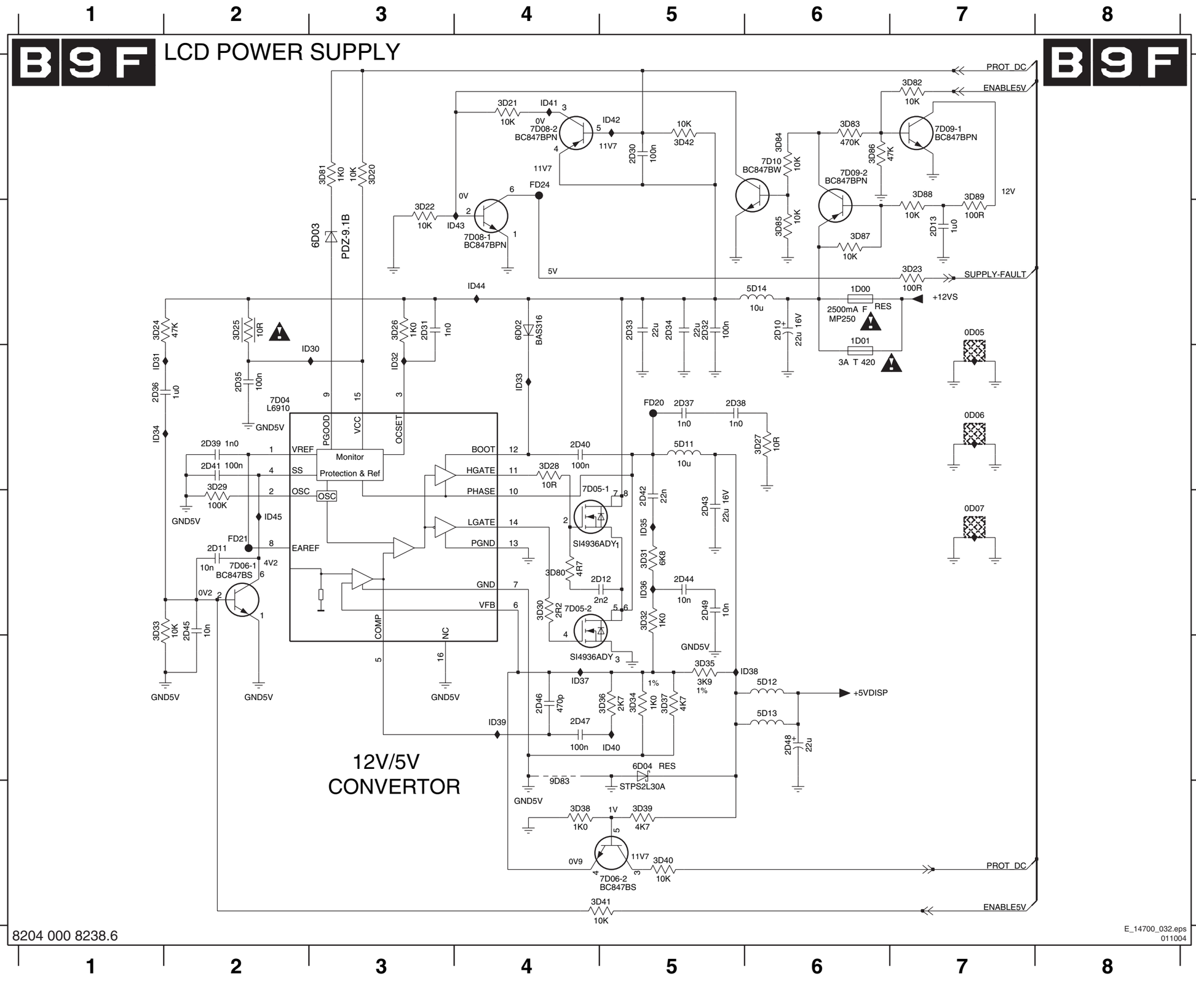

0D05 B7 7D08-2 A4
0D06 C7 7D09-1 A7
0D07 D7 7D09-2 A6
1D00 B6 7D10 A6
1D01 B6 9D83 E4
2D10 B6 FD20 C5
2D11 D2 FD21 D2
2D12 D5 FD24 A4
2D13 B7 ID30 C3
2D30 A5 ID31 C1
2D31 B3 ID32 C3
2D32 B5 ID33 C4
2D33 B5 ID34 C1
2D34 B5 ID35 D5
2D35 C2 ID36 D5
2D36 C1 ID37 E4
2D37 C5 ID38 E6
2D38 C5 ID39 E4
2D39 C2 ID40 E5
2D40 C4 ID41 A4
2D41 C2 ID42 A5
2D42 D5 ID43 B4
2D43 D5 ID44 B4
2D44 D5 ID45 D2
2D45 D2
2D46 E4
2D47 E4
2D48 E6
2D49 D5
3D20 A3
3D21 A4
3D22 B3
3D23 B7
3D24 B1
3D25 B2
3D26 B3
3D27 C6
3D28 C4
3D29 C2
3D30 D4
3D31 D5
3D32 D5
3D33 D1
3D34 E5
3D35 E5
3D36 E5
3D37 E5
3D38 F4
3D39 F5
3D40 F5
3D41 F5
3D42 A5
3D80 D4
3D81 A3
3D82 A7
3D83 A6
3D84 A6
3D85 B6
3D86 A6
3D87 B6
3D88 A7
3D89 A7
5D11 C5
5D12 E6
5D13 E6
5D14 B6
6D02 B4
6D03 B3
6D04 E5
7D04 C2
7D05-1 D4
7D05-2 D4
7D06-1 D2
7D06-2 F5
7D08-1 B4

Small Signal Board: Connections

0M00 G4	0M06 G5	0M12 G5	0M19 G8	1M36 G12	2M03 D7	2M10 D12	2M16 D9	2M28 D10	2M50 D3	2M64 E12	2M70 D15	2M76 E15	2M85 F9	3M05 D1	3M12 D13	3M18 D13	3M24 D2	3M36 D8	3M46 C5	3M55 D10	5M04 D14	5M15 D11	5M26 C15	7M03 D9	9M10 F15	FM06 E1	FM12 E12	FM18 F10	FM24 E14	FM30 F8	FM36 F11	FM42 E2	IM02 B5
0M01 G4	0M07 G4	0M13 G5	0M20 G9	1M46 G14	2M04 D7	2M11 D13	2M17 D10	2M29 D10	2M51 D1	2M65 D14	2M71 D15	2M77 E15	2M90 C5	3M06 D2	3M13 D13	3M19 D13	3M30 D7	3M40 A4	3M47 C7	3M60 B5	5M05 D15	5M18 D10	6M01-1 E3	7M04 D10	FM01 E1	FM07 F10	FM13 E12	FM19 F11	FM25 E14	FM31 F8	FM37 E14	FM44 E2	IM04 B7
0M02 G4	0M08 G4	0M14 G6	0M21 G11	1M52 G10	2M06 D7	2M12 D13	2M18 D11	2M30 D9	2M58 D1	2M66 D14	2M72 E14	2M78 E15	3M01 D1	3M07 D1	3M14 C9	3M20 D12	3M31 D7	3M41 A6	3M50 C4	5M00 D14	5M06 D15	5M19 D10	6M01-2 D3	7M05-1 C4	FM02 E1	FM08 E12	FM14 E12	FM20 F11	FM26 E15	FM32 F8	FM38 E15	FM46 F8	IM05 A6
0M03 G4	0M09 G4	0M15 G6	1M01 F3	2M00 D11	2M07 D8	2M13 D12	2M19 D10	2M31 D10	2M59 D2	2M67 D14	2M73 E14	2M80 C5	3M02 D1	3M08 D1	3M15 C9	3M21 D12	3M33 D8	3M42 B5	3M51 A5	5M01 D14	5M07 D15	5M20 E1	7M01-1 B7	7M05-2 B6	FM03 F3	FM09 E12	FM15 E13	FM21 F8	FM27 E15	FM33 F2	FM39 F7	FM47 F2	IM07 B7
0M04 G5	0M10 G4	0M16 G6	1M03 G7	2M01 D12	2M08 D8	2M14 E12	2M20 D1	2M47 D1	2M62 D10	2M68 D14	2M74 E14	2M81 F2	3M03 D3	3M09 D2	3M16 C9	3M22 D12	3M34 D8	3M43 B4	3M52 A5	5M02 D14	5M08 D15	5M21 E2	7M01-2 B6	9M01 B6	FM04 E2	FM10 F10	FM16 E13	FM22 E1	FM28 F7	FM34 F8	FM40 F7	FM48 F2	IM08 E12
0M05 G5	0M11 G5	0M17 G6	1M20 G1	2M02 D12	2M09 D8	2M15 E13	2M21 D1	2M49 D8	2M63 E12	2M69 D15	2M75 E14	2M82 F2	3M04 D8	3M10 D12	3M17 C10	3M23 D12	3M35 D7	3M44 C3	3M53 A6	5M03 D14	5M14 D11	5M25 B15	7M02 C4	9M02 B14	FM05 E1	FM11 F10	FM17 F10	FM23 F13	FM29 F7	FM35 E14	FM41 F9	IM01 B4	IM09 E13

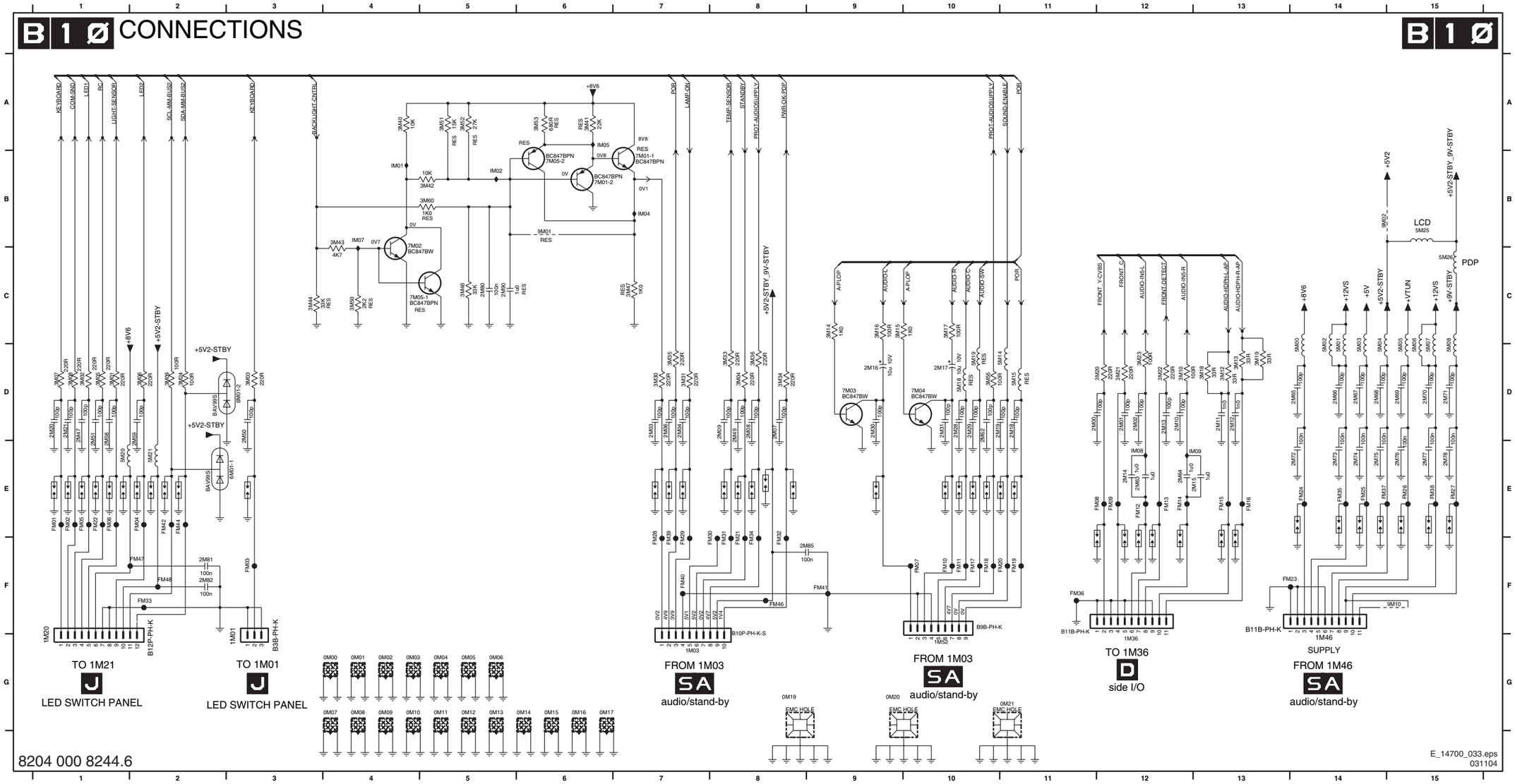

Small Signal Board: I/O: SCART

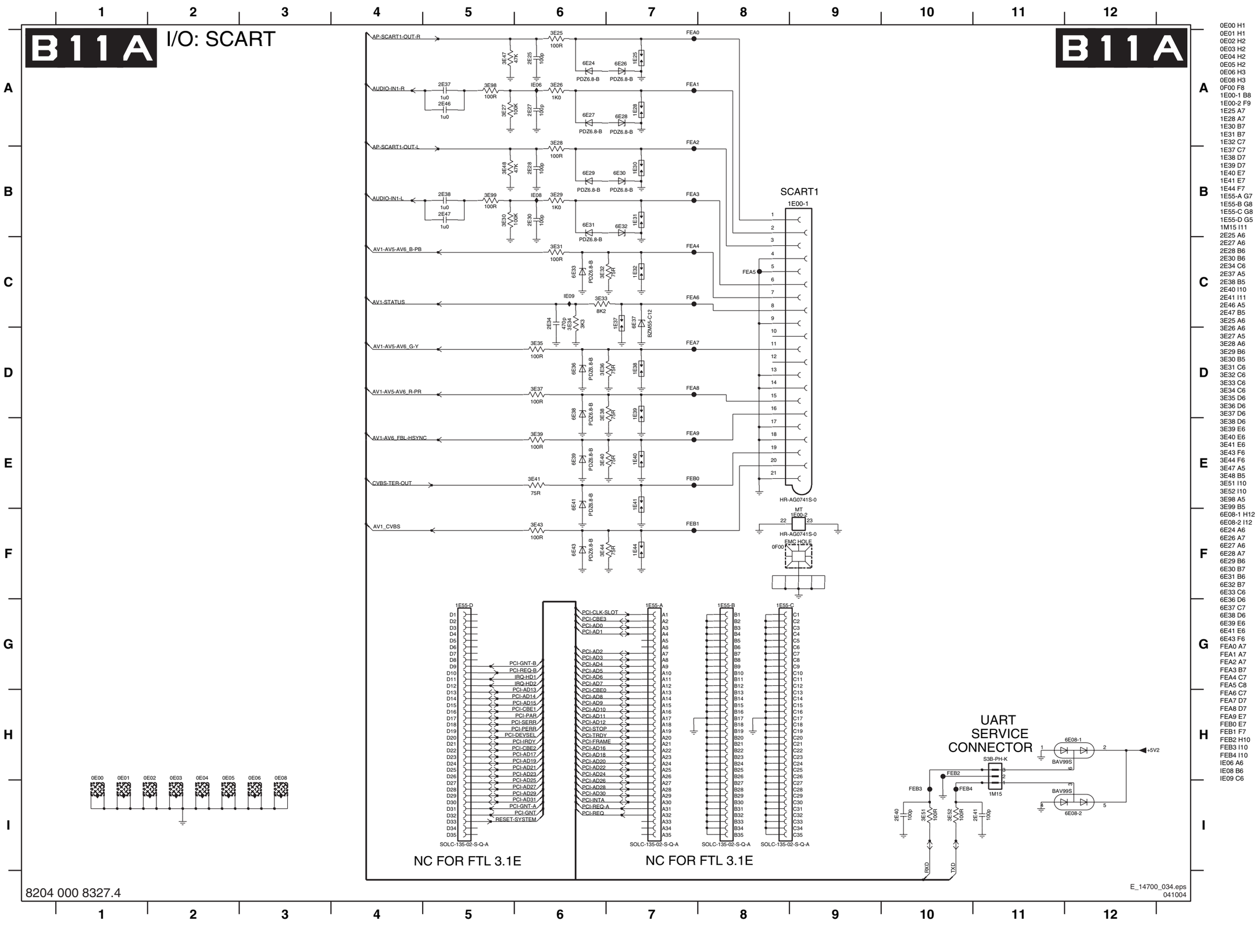

0E00 H1
0E01 H1
0E02 H2
0E03 H2
0E04 H2
0E05 H2
0E06 H3
0E08 H3
0F00 F8
1E00-1 B8
1E00-2 F9
1E25 A7
1E28 A7
1E30 B7
1E31 B7
1E32 C7
1E37 C7
1E38 D7
1E39 D7
1E40 E7
1E41 E7
1E44 F7
1E55-A G7
1E55-B G8
1E55-C G8
1E55-D G5
1M15 I11
2E25 A6
2E27 A6
2E28 B6
2E30 B6
2E34 C6
2E37 A5
2E38 B5
2E40 I10
2E41 I11
2E46 A5
2E47 B5
3E25 A6
3E26 A6
3E27 A5
3E28 A6
3E29 B6
3E30 B5
3E31 C6
3E32 C6
3E33 C6
3E34 C6
3E35 D6
3E36 D6
3E37 D6
3E38 D6
3E39 E6
3E40 E6
3E41 E6
3E43 F6
3E44 F6
3E47 A5
3E48 B5
3E51 I10
3E52 I10
3E98 A5
3E99 B5
6E08-1 H12
6E08-2 I12
6E24 A6
6E26 A7
6E27 A6
6E28 A7
6E29 B6
6E30 B7
6E31 B6
6E32 B7
6E33 C6
6E36 D6
6E37 C7
6E38 D6
6E39 E6
6E41 E6
6E43 F6
FEA0 A7
FEA1 A7
FEA2 A7
FEA3 B7
FEA4 C7
FEA5 C8
FEA6 C7
FEA7 D7
FEA8 D7
FEA9 E7
FEB0 E7
FEB1 F7
FEB2 H10
FEB3 I10
FEB4 I10
IE06 A6
IE08 B6
IE09 C6

Small Signal Board: I/O: Analog I/O

B 11 B I/O : ANALOG I/O

B 11 B

SPDIF IN/OUT — YKC21-4225N 1I00 — FI03 — FI01 — FI02 — 6I02 6I03 6I04 6I05 PDZ6.8-B — 1I02 1I04 — 3I04 75R — 3I16 120R — 2I01 2I03 100p — 3I05 220R — 5I00 — SPI-1 — SPI-OUT

AUDIO OUT L+R — YKC21-4112N 1I05 — FI05 — FI06 — 6I08 6I09 6I10 6I11 PDZ6.8-B — 1I08 1I09 — 3I06 3I08 100R — 3I07 3I09 100K — 2I07 2I09 100p — AP-SNDL-MON-OUT — AP-SNDR-MON-OUT

SPDIF IN — YKC21-3226 1I03 — FI08 — 6I33 6I35 PDZ6.8-B — 1I32 — 3I18 75R — 2I04 100p — 5I02 — SPI-2

IN-CENTER — AP-SUBW-OUT — AUDIO-IN4-L — AUDIO-IN4-R

3I43 3I03 3I44 3I45 100R — 2I08 2I00 2I05 2I06 100p — 3I01 3I02 3I05 3I06 100K — 2I61 2I62 2I63 2I64 1u0 — 3I24 3I22 3I25 1K0 — 6I24 6I12 6I00 6I01 6I32 6I34 6I36 6I38 PDZ6.8-B — FI24 FI00 FI12 FI11 — 1I07 1I10 — YKC21-4591N YKC21-4112N — CENTRE IN SW OUT — AUDIO IN L+R — 1I24 1I01 1I31 1I33

+5V-AIO — 2I70 22n — 7I55 PCA9554PW — VDD — A0 A1 A2 — SCL SDA INT VSS — 3I67 3I68 100R — II85 II86 II87 II88 II89 — IO-EXP-1 IO-EXP-2 IO-EXP-3 IO-EXP-4 IO-EXP-7 — II91 SDA-MM-BUS2 — II92 SCL-MM-BUS2

I/O EXPANDER

AUDIO-OUT3-L — AP-SNDL-MON-OUT — AUDIO-OUT3-R — AP-SNDR-MON-OUT — AUDIO-SW-EXT — AP-SUBW-OUT — 2I71 2I73 2I02 10u 16V — II60 II63 II66 — 3I71 3I73 3I27 150R — II61 II64 II67 — 7I71-1 7I71-2 BC847BS — II62 II65 II68 — 3I72 3I74 3I66 1K0 — 7I80 BC847BW

+3V3 — +5V — +8V6 — +12VSW — 9I91 9I92 9I94 9I96 — 2I91 2I92 2I94 2I96 22n — 2I98 2I93 2I95 2I97 1u0 16V — II02 II03 II04 II05 — +3V3-AIO +5V-AIO +8V6-AIO +11VS-AIO

+8V6-AIO — 3I28 1K0 — 2I90 100u 16V — 3I10 82K — 3I12 56K — 2I12 1u0 16V — II75 — 3I11 3K9 — II08 — 3I13 100R — BC847BS 7I12-2 — 7I12-1 BC847BS — IN-CENTER — 3I19 27K — 2I13 1u0 — II10 — II76 — 3I91 47K — 3I15 1K8 — II01 — 2I14 16V 1u0 — 3I14 1K0 — AUDIO-CENTER-IN

AUDIO-OUT1-L — AP-SCART1-OUT-L — AUDIO-OUT1-R — AP-SCART1-OUT-R — A-PLOP — 2I87 2I89 10u 16V — II69 II72 — 3I87 3I89 150R — II70 II73 — 7I87-1 7I87-2 BC847BS — II71 II74 — 3I88 3I90 1K0

E_14700_035.eps 011004

8204 000 8327.4

1I00 B1 1I01 B8 1I02 B2 1I03 D1 1I04 B2 1I05 C1 1I07 A8 1I08 C2 1I09 D2 1I10 B8 1I24 A8 1I31 C8 1I32 E2 1I33 C8 2I00 B6 2I01 B3 2I02 C11 2I03 B3 2I04 E3 2I05 C6 2I06 C6 2I07 C3 2I08 A6 2I09 D3 2I12 H2 2I13 I2 2I14 I3 2I61 B5 2I62 C5 2I63 C5 2I64 C5 2I70 D9 2I71 A11 2I73 B11 2I87 G11 2I89 H11 2I90 H1 2I91 F6 2I92 G6 2I93 G6 2I94 G6 2I95 G6 2I96 H6 2I97 H6 2I98 F6 3I01 A6 3I02 B6 3I03 B7 3I04 B3 3I05 B4 3I06 C3 3I07 C3 3I08 D3 3I09 D3 3I10 H2 3I11 H2 3I12 H2 3I13 H3 3I14 I3 3I15 I2 3I16 B3 3I18 E3 3I19 I1 3I22 B7 3I23 C6 3I24 A7 3I25 C7 3I26 C6 3I27 C11 3I28 H1 3I43 A6 3I44 B6 3I45 C6 3I66 C12 3I67 E8 3I68 E8 3I71 A11 3I72 A12 3I73 B11 3I74 B12 3I87 G11 3I88 G12 3I89 H11 3I90 H12 3I91 I2 5I00 A4 5I02 E4 6I00 B7 6I01 B7 6I02 B2 6I03 B2 6I04 B2 6I05 C2 6I08 C2 6I09 D2 6I10 D2 6I11 D2 6I12 A7 6I24 A7 6I32 C7 6I33 E2 6I34 C7 6I35 E2 6I36 C7 6I38 D7 7I12-1 I2 7I12-2 I3 7I55 D9 7I71-1 B12 7I71-2 B12 7I80 C12 7I87-1 G12 7I87-2 H12 9I91 F6 9I92 G6 9I94 G6 9I96 H6 FI00 B8 FI01 A2 FI02 B2 FI03 B1 FI05 C2 FI06 D2 FI08 E2 FI11 C8 FI12 B8 FI24 A8 II01 I3 II02 F6 II03 G6 II04 G6 II05 H6 II08 H3 II10 I2 II60 A11 II61 A12 II62 A12 II63 B11 II64 B12 II65 B12 II66 C11 II67 C12 II68 C12 II69 G11 II70 G12 II71 G12 II72 H11 II73 H12 II74 H12 II75 H2 II76 I2 II85 D10 II86 D10 II87 D10 II88 E10 II89 E10 II91 F9 II92 F9

Small Signal Board: I/O: SPDIF

B11C I/O: SPDIF

B11C

+3V3-AIO
3I58 2R2
II93
2I58 100n
2I59 100u 16V
3I50 22K
7I94-1 74HCU04PW
SPDIF-SEL-OUT1
II57
II36
2I50 100p
3I51 47K
7I94-2 74HCU04PW
3I52 68R
2I51 100p
SPDIF-IN1
3I34 22K
7I94-3 74HCU04PW
SPDIF-SEL-OUT2
II58
II40
2I52 100p
3I56 47K
7I94-4 74HCU04PW
3I57 68R
2I53 100p
SPDIF-IN2
9I88
JTAG-TD-SPIDER-ANAIO
JTAG-TD-ANAIO-DIGIO
9I89 RES
7I94-5 74HCU04PW
7I94-6 74HCU04PW
SPDIF-OUT1
3I62 68R RES
II32
9I42
2I54 100n
II77
SPI-OUT

+5V-AIO
2I35 100n
7I90 74HC4053
II53
2I36 100n
3I35 47K
3I36 47K
3I37 47K
3I40 75R
9I37
MUXDX
II48
II46
2I37 100n
II54
SPI-1
2I38 100n
II55
9I35
SPI-2
9I36
SPDIF-OPT-IN
II44
2I39 100n
II56
SPDIF-HDMI
3I41 47K
IO-EXP-1
II50
SPDIF-SEL-OUT1
IO-EXP-2
+5V-AIO
2I40 100n
7I91 74HC4053
IO-EXP-3
3I42 47K
SPDIF-SEL-OUT2
IO-EXP-4
9I38
9I41

SPDIF SELECTORS

8204 000 8327.4

E_14700_036.eps
011004

2I35 A8
2I36 A8
2I37 B8
2I38 B8
2I39 B8
2I40 D7
2I50 B3
2I51 B4
2I52 D3
2I53 C4
2I54 E4
2I58 B1
2I59 B1
3I34 C2
3I35 B7
3I36 B8
3I37 B8
3I40 B9
3I41 B7
3I42 E7
3I50 B2
3I51 B3
3I52 B4
3I56 D3
3I57 C4
3I58 A2
3I62 F2
7I90 A7
7I91 D7
7I94-1 B2
7I94-2 B3
7I94-3 C2
7I94-4 C3
7I94-5 E2
7I94-6 E3
9I35 B9
9I36 B8
9I37 B6
9I38 F8
9I41 F8
9I42 E4
9I88 D4
9I89 E3
II32 E3
II36 B3
II40 C3
II44 B7
II46 B7
II48 B7
II50 C6
II53 A8
II54 B9
II55 B8
II56 B9
II57 B2
II58 C2
II77 E4
II93 A2

Small Signal Board: I/O: External I/O

B11D I/O: EXTERNAL I/O

B11D

AV2-AV4_R-PR 9E55 9E56 2E00 100p
AV2-AV4_G-Y 9E57 9E58 2E01 100p
AV2-AV4_B-PB 9E59 9E60 2E02 100p
AV2_FBL 9E61 9E62 2E03 100p
AV3_CVBS 9E14 9E63 9E64 2E04 100p
AV7_Y-CVBS 9E15
AV3-STATUS 9E16 9E65 9E66 2E05 100p
AV7_C 9E17
REGIMBEAU 9E67 9E68 2E06 100p
CVBS-TER-OUT 9E69 9E70 2E54 100p
AV2_Y-CVBS 9E71 9E72 2E56 100p
AV2_C 9E73 9E74 2E58 100p
C-MON-OUT 9E75 9E76 2E60 100p
Y-CVBS-MON-OUT 9E77 9E78 2E62 100p
AV2-STATUS 9E79 9E80 2E64 100p
SDA-MM-BUS2 9E81 9E82 2E66 100p
SCL-MM-BUS2 9E83 9E84 2E68 100p
5E05
SPDIF-OPT-IN 9E86 2E70 100p
P50 9E87 9E88
AUDIO-IN1-R 9E18 2E72 100p
AUDIO-IN3-R 9E19 3E62 100R 9E90
AUDIO-IN1-L 9E20 2E74 100p
AUDIO-IN3-L 9E21 3E88 100R 9E92 2E76 100p
AUDIO-IN2-R 3E89 100R 9E94 2E78 100p
AUDIO-IN2-L 3E79 100R 9E96 2E80 100p

3E18 1K8 — 7E09 BC847B — 3E19 8K2 — 2E24 100n — +8V6-AIO

+8V6-AIO 9E31 2E99 100p 9E00
+5V-AIO 9E32 2E98 100p 9E02
+11VS-AIO 9E33 2E97 100p 9E03

1E35
FE30 FE31 FE32 FE33 FE34 FE35 FE36 FE04 FE05 FE06 FE07 FE08 FE09 FE10 FE11 FE16 FE54 FE56 FE58 FE17 FE18 FE19 FE23 FE24 FE46 FE47 FE52 FE53 FE59
40FMN-BMT-A-TFT

TO 1035 BE BOTTOM I/O

5E06
SPI-1 9E01 2E07 100p FE57
AV7_Y-CVBS 9E43 9E44 2E81 100p FE41
5E04
SPDIF-OUT1 9E05 2E09 100p FE01
3E92 100R
AUDIO-OUT1-L 9E13 2E53 100p
3E97 100R
AUDIO-OUT1-R 9E11 2E12 100p

1E61
AV1-AV6_FBL-HSYNC 9E47 9E48 2E85 100p FE13
AV1-AV5-AV6_R-PR 9E49 9E50 2E87 100p FE12
AV1-AV5-AV6_G-Y 9E51 9E52 2E89 100p FE45 FE26 FE48 FE49
AV1-AV5-AV6_B-PB 9E53 9E54 2E91 100p FE50 FE51
AV1_CVBS 9E10 9E22 2E95 100p
AV1-STATUS 9E23 9E24 9E25 2E96 100p
AV6_VSYNC 9E26

1E60 FE60

NC FOR FTL 3.1E

3E90 100R
AUDIO-OUT2-R 9E27 2E90 100p
3E91 100R
AUDIO-OUT2-L 9E28 2E92 100p
IO-EXP-7 9E04 9E29 2E93 100p
5E07
A-PLOP 9E30 2E94 100p

8204 000 8327.4

E_14700_037.eps 031104

1E35	B9	9E04	F5	9E82	C5
1E60	E3	9E05	E2	9E83	C5
1E61	E4	9E10	F1	9E84	C5
2E00	A5	9E11	E2	9E86	D5
2E01	A5	9E13	E2	9E87	D5
2E02	A5	9E14	A5	9E88	D5
2E03	A5	9E15	A5	9E90	D5
2E04	A6	9E16	B5	9E92	D5
2E05	B6	9E17	B5	9E94	E5
2E06	B5	9E18	D5	9E96	E5
2E07	D2	9E19	D5	FE01	E3
2E09	E2	9E20	D5	FE04	B8
2E12	E2	9E21	D5	FE05	B8
2E24	B7	9E22	F2	FE06	B8
2E53	E2	9E23	F1	FE07	C8
2E54	B5	9E24	F2	FE08	C8
2E56	B5	9E25	F2	FE09	C8
2E58	B5	9E26	F1	FE10	C8
2E60	C5	9E27	F5	FE11	C8
2E62	C5	9E28	F5	FE12	F3
2E64	C5	9E29	F5	FE13	E3
2E66	C5	9E30	F5	FE16	C8
2E68	D5	9E31	C7	FE17	C8
2E70	D5	9E32	C7	FE18	C8
2E72	D5	9E33	C7	FE19	C8
2E74	D5	9E43	D1	FE23	D8
2E76	D5	9E44	D2	FE24	D8
2E78	E5	9E47	E1	FE26	F3
2E80	E5	9E48	E2	FE30	B9
2E81	D2	9E49	F1	FE31	B9
2E85	E2	9E50	F2	FE32	B9
2E87	F2	9E51	F1	FE33	B9
2E89	F2	9E52	F2	FE34	B8
2E90	F5	9E53	F1	FE35	B8
2E91	F2	9E54	F2	FE36	B8
2E92	F5	9E55	A5	FE41	D3
2E93	F5	9E56	A5	FE45	F3
2E94	F5	9E57	A5	FE46	D8
2E95	F2	9E58	A5	FE47	D8
2E96	F2	9E59	A5	FE48	F3
2E97	D7	9E60	A5	FE49	F3
2E98	C7	9E61	A5	FE50	F3
2E99	C7	9E62	A5	FE51	F3
3E18	B6	9E63	A5	FE52	D8
3E19	B7	9E64	A6	FE53	D8
3E62	D5	9E65	B5	FE54	C8
3E79	E5	9E66	B6	FE56	C8
3E88	D5	9E67	B5	FE57	D3
3E89	E5	9E68	B5	FE58	C8
3E90	F5	9E69	B5	9E59	E8
3E91	F5	9E70	B5	FE60	F3
3E92	E1	9E71	B5		
3E97	E1	9E72	B5		
5E04	D1	9E73	B5		
5E05	D5	9E74	B5		
5E06	D1	9E75	C5		
5E07	F5	9E76	C5		
7E09	B7	9E77	C5		
9E00	C7	9E78	C5		
9E01	D2	9E79	C5		
9E02	C7	9E80	C5		
9E03	C7	9E81	C5		

Small Signal Board: I/O: HDMI

B11E I/O: HDMI **B11E**

HDMI CONNECTOR

HDMI PANELLINK RECEIVER

8204 000 8327.4

E_14700_038.eps
011004

1E10 D3
1E11 E3
1E12 G3
1E13 H3
1E65 D1
1E70 A3
1E71 A3
1E72 A3
2E13 A3
2E14 A4
2E15 A4
2E16 A5
2E17 B11
2E18 B11
2E19 B12
2E20 B12
2E21 B12
2E22 B11
2E23 C11
2E26 H8
2E29 G8
2E31 A10
2E32 H8
2E35 C11
2E36 H13
2I15 D12
2I16 B11
2I19 B9
2I20 B10
2I21 B10
2I22 B10
2I23 B10
2I24 C11
2I31 C10
2I32 C10
2I33 C10
2I34 C11
2I42 C10
2I43 C11
2I44 C11
2I45 C12
2I46 D11
2I47 D11
2I48 D11
2I49 D12
2I60 G8
3E00 B3
3E01 B5
3E02 B5
3E03 B5
3E04 B5
3E05 B5
3E06 C7
3E07 C8
3E08 D7
3E09 D7
3E10 D8
3E11 D7
3E12 D8
3E13 G9
3E14 E9
3E15 E7
3E16 F7
3E17 H8
3E53 B3
3E54 E13
3E55 E13
3E56-1 E13
3E56-2 F13
3E56-3 F13
3E56-4 F13
3E57-1 F13
3E57-2 F13
3E57-3 F13
3E57-4 F13
3E58-1 F13
3E58-2 F13
3E58-3 F13
3E58-4 F13
3E59-1 F13
3E59-2 G13
3E59-3 G13
3E59-4 G13
3E60-1 G13
3E60-2 G13
3E60-3 G13
3E60-4 G13
3E61 H13
3E76 G13
3E77 G13
3E78 G13
3E80 H9
3E81 H8
3E82 H8
3E84 I13
3E85 I4
3E86 H13
3E87 H14
3EA0 I4
3EA3 D4
3EA4 D4
3EA5 E4
3EA6 F4
3EA7 G4
3EA8 G4
3EA9 H4
5E09 C11
5E10 A4
5E11 B11
5E12 C11
5E13 D11
5E14 B11
5E15 A10
6E10 B6
6E11 B6
6E12 C6
6E13 C6
7E30 B4
7E31 C7
7E32 C8
7E33 D9
7E34 E7
7E35 E8
9E35 D7
9E36 C3
9E37 C6
9E38 C6
9E39 D9
9E40 D1
9E41 I14
9E42 C8
FE61 B5
FE69 D1
FE70 D9
FE72 E1
FE73 E1
FE74 E1
FE75 E1
FE78 H8
FE80 H8
FE81 H13
FE82 A10
FE83 E1
FE84 B5
FE85 C7
IE10 D9
IE11 E9
IE12 D12
IE13 D10
IE14 D11
IE15 B3
IE16 E13
IE17 E13
IE18 G13
IE19 G9
IE20 G13
IE21 G9
IE22 G13
IE23 G9
IE24 G14
IE25 H9
IE26 I13
IE27 A4
IE28 C7
IE29 C8
IE30 E7
IE31 E8
IE32 G8
IE33 D10
IE34 C14
IE35 D14
II82 E9

Small Signal Board: I/O: Anti Plop-HDPH

B 11 F I/O: ANTI PLOP-HDPH

B 11 F

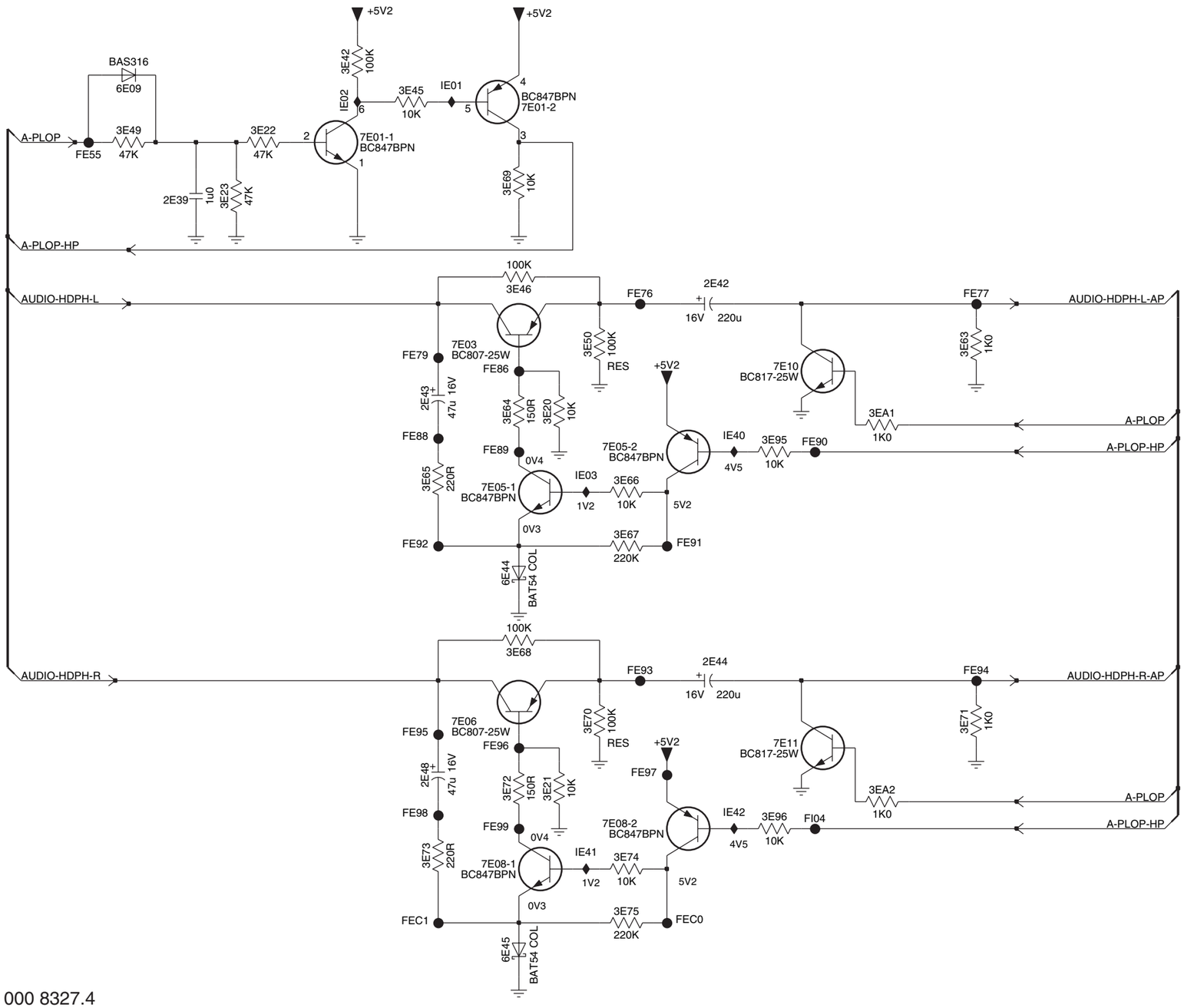

8204 000 8327.4

E_14700_038.eps
011004

2E39 B2
2E42 C5
2E43 C3
2E44 E5
2E48 E3
3E20 C4
3E21 E4
3E22 B2
3E23 B2
3E42 B3
3E45 B3
3E46 C3
3E49 B1
3E50 C4
3E63 C6
3E64 C3
3E65 D3
3E66 D4
3E67 D4
3E68 E3
3E69 B3
3E70 E4
3E71 E6
3E72 E3
3E73 F3
3E74 F4
3E75 F4
3E95 D5
3E96 F5
3EA1 C5
3EA2 E5
6E09 B1
6E44 D3
6E45 F3
7E01-1 B3
7E01-2 B3
7E03 C3
7E05-1 D3
7E05-2 D4
7E06 E3
7E08-1 F3
7E08-2 F4
7E10 C5
7E11 E5
FE55 B1
FE76 C4
FE77 C6
FE79 C3
FE86 C3
FE88 D3
FE89 D3
FE90 D5
FE91 D4
FE92 D3
FE93 E4
FE94 E6
FE95 E3
FE96 E4
FE97 F3
FE98 F3
FE99 F3
FEC0 F4
FEC1 F3
FI04 F5
IE01 B3
IE02 B3
IE03 D4
IE40 D5
IE41 F4
IE42 F5

Small Signal Board: Ethernet (Optional)

1O00 D7 2O01 D7 2O04 A11 2O07 D11 2O12 A8 2O15 B10 2O18 A2 2O21 B5 2O24 B6 2O27 B7 3O01 C7 3O04 E7 3O07 D1 3O10 D11 3O23 A9 3O26 C9 5O00 A8 6O01 F7 7O00-2 H7 CO01 G11 FO03 C9 FO06 F8 IO01 E7 IO04 A6
1O10 A10 2O02 H3 2O05 A12 2O10 E2 2O13 B8 2O16 C8 2O19 B3 2O22 B5 2O25 B6 2O28 B7 3O02 D2 3O05 F7 3O08 E1 3O21 A8 3O24 A9 3O27 C8 5O01 A2 6O02 D10 9O16 C9 FO01 A10 FO04 C9 FO07 F8 IO02 C7 IO05 A11
2O00 D7 2O03 H3 2O06 D12 2O11 A8 2O14 B9 2O17 A2 2O20 B3 2O23 B5 2O26 B7 3O00 C7 3O03 C7 3O06 F8 3O09 A11 3O22 A8 3O25 C8 3O28 C9 6O00 F7 7O00-1 B3 AO00 C7 FO02 B10 FO05 C10 FO08 E3 IO03 H3 IO06 D11

1 2 3 4 5 6 7 8 9 10 11 12

B 1 2 ETHERNET

B 1 2

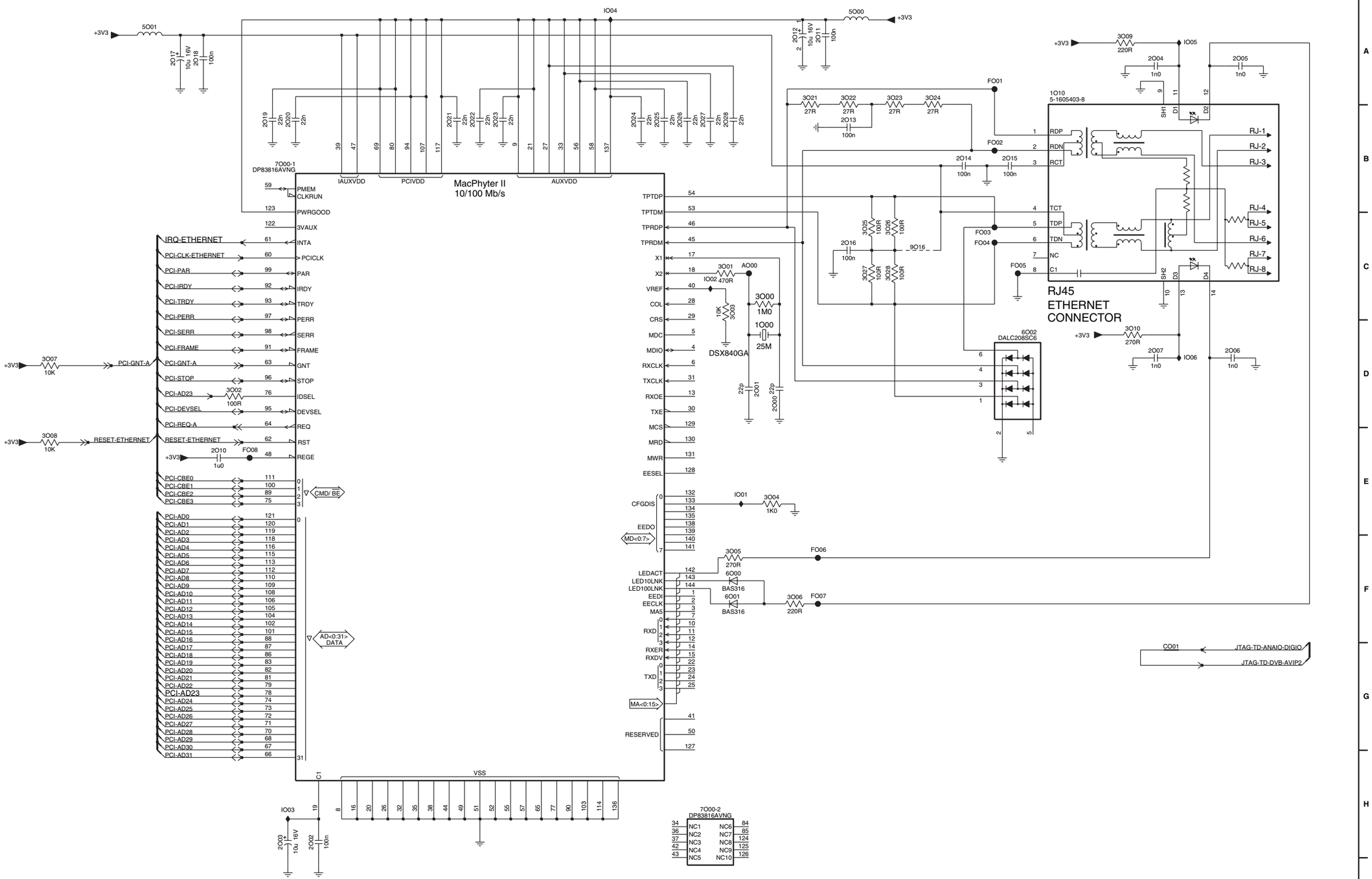

8204 000 8248.5

E_14700_040.eps
300904

Small Signal Board: LVDS Connector

1G50 B3 FG97 D3 FG98 D3 FG99 D2

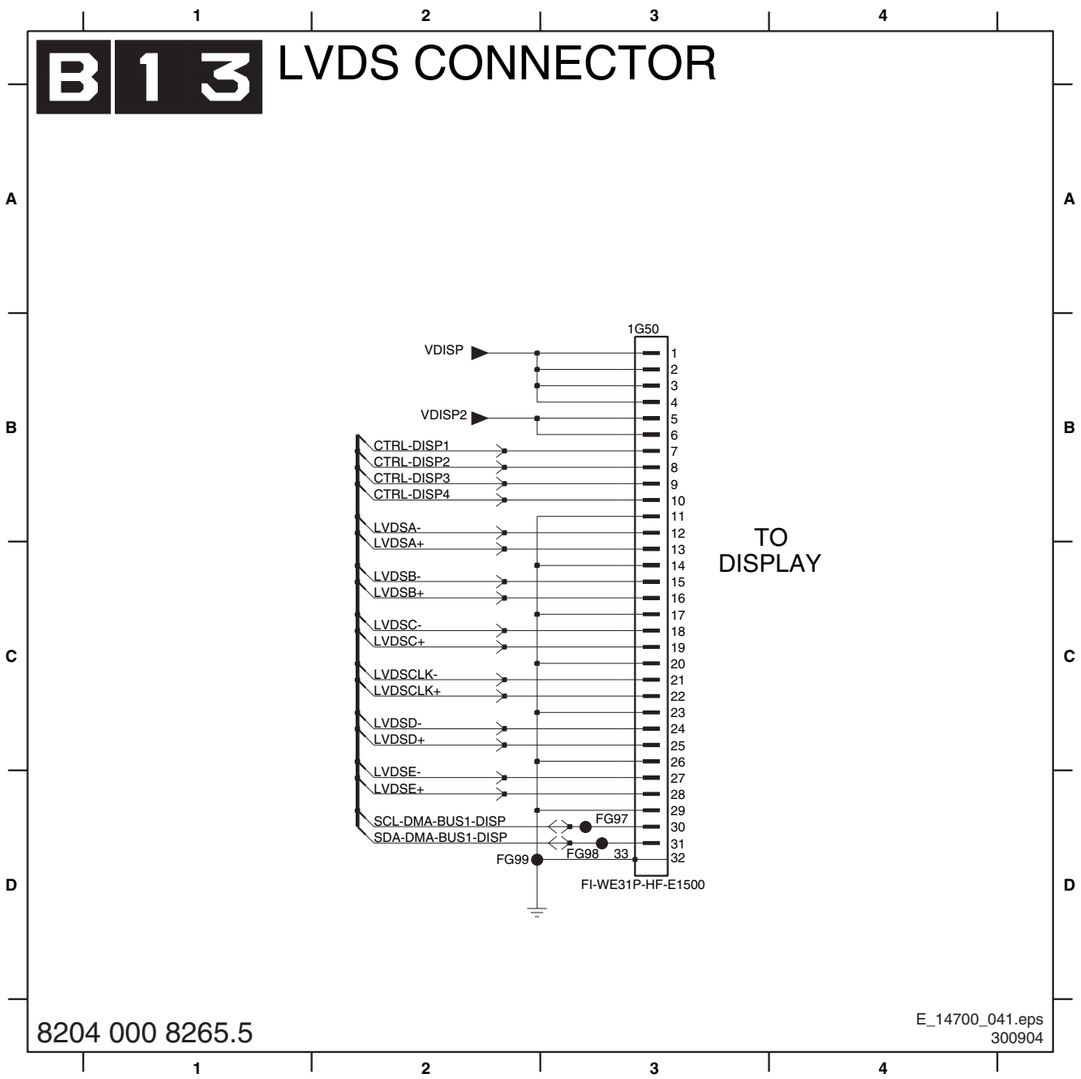

SRP (Service Reference Protocol) Explanation

1.1. Introduction

SRP (Service Reference Protocol) is a software tool that creates a list with all references to signal lines. The list contains references to the signals within all schematics of a PWB. It replaces the text references currently printed next to the signal names in the schematics. These printed references are created manually and are therefore not guaranteed to be 100% correct. In addition, in the current crowded schematics there is often none or very little place for these references.
Some of the PWB schematics will use SRP while others will still use the manual references. Either there will be an SRP reference list for a schematic, or there will be printed references in the schematic.

1.2. Non-SRP schematics

There are several different signals available in a schematic:

1.2.1. Power supply lines

All power supply lines are available in the supply line overview (see chapter 6). In the schematics (see chapter 7) is not indicated where supplies are coming from or going to.
It is however indicated if a supply is incoming (created elsewhere), or outgoing (created or adapted in the current schematic).

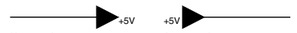

Outgoing Incoming

1.2.2. Normal signals

For normal signals, a schematic reference (e.g. B14b) is placed next to the signals.

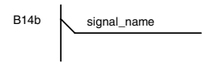

1.2.3. Grounds

For normal and special grounds (e.g. GNDHOT or GND3V3 etc.), nothing is indicated.

1.3. SRP schematics

SRP is a tool, which automatically creates a list with signal references, indicating on which schematic the signals are used.
A reference is created for all signals indicated with an SRP symbol, these symbols are:

Power supply line.

Stand alone signal or switching line (used as less as possible).

Signal line into a wire tree.

Switching line into a wire tree.

Bi-directional line (e.g. SDA) into a wire tree.

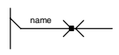

Signal line into a wire tree, its direction depends on the circuit (e.g. ingoing for PDP, outgoing for LCD sets).

Remarks :

- When there is a black dot on the "signal direction arrow" it is an SRP symbol, so there re will be a reference to the signal name in the SRP list.
- All references to normal grounds (Ground symbols without additional text) are not listed in the reference list, this to keep it concise.
- Signals that are not used in multiple schematics, but only once or several times in the same schematic are not included in the SRP reference list.

Additional tip:
When using the PDF service manual file, you can very easily search for signal names and follow the signal over all the schematics. In Adobe PDF reader:

- Select the signal name you want to search for, with the "Select text" tool.
- Copy and paste the signal name in the "Search PDF" tool.
- Search for all occurrences of the signal name.
- Now you can quickly jump between the different occurrences and follow the signal over all schematics. It is advised to "zoom in" to e.g. 150% to see clearly, which text is selected. Then you can zoom out, to get an overview of the complete schematic.

PS. It is recommended to use at least Adobe PDF (reader) version 6.x, due to better search possibilities in this version.

E_14700_101.eps
151104

Small Signal Board: SRP (Signal References)

Diagr.	Netname
B11b	+11VS-AIO
B11d	+11VS-AIO
B01	+12V
B07a	+12V
B07c	+12V
B01	+12VS
B09d	+12VS
B09f	+12VS
B10	+12VS
B01	+12VSW
B04e	+12VSW
B07c	+12VSW
B11b	+12VSW
B01	+1V2
B06d	+1V2
B07a	+1V2
B09a	+1V5
B09a	+1V5-PLA
B04d	+1V8
B05d	+1V8-SUB
B01	+2V5
B06d	+2V5
B07a	+2V5
B01	+2V5D
B06b	+2V5D
B06b	+2V5D-DDR
B06b	+2V5-VPR
B06d	+2V5-VPR
B08	+2V5-VPR
B01	+2V8
B04b	+2V8
B04f	+2V8
B05b	+2V8
B01	+3V3
B04d	+3V3
B04f	+3V3
B05d	+3V3
B06a	+3V3
B06c	+3V3
B06d	+3V3
B06e	+3V3
B07a	+3V3
B07b	+3V3
B07c	+3V3
B08	+3V3
B09a	+3V3
B09c	+3V3
B09d	+3V3
B09e	+3V3
B11b	+3V3
B11e	+3V3
B12	+3V3
B11b	+3V3-AIO
B11c	+3V3-AIO
B07c	+3V3-AUD
B09c	+3V3DAC
B09d	+3V3-EPLD
B09e	+3V3IO-TMDS
B07b	+3V3-NAND
B09a	+3V3-PLA
B11e	+3V3-SI
B01	+5V
B04b	+5V
B04e	+5V
B05b	+5V
B06a	+5V
B07a	+5V
B07c	+5V
B09d	+5V
B09e	+5V
B10	+5V
B11b	+5V
B01	+5V2
B07a	+5V2
B08	+5V2
B10	+5V2
B11a	+5V2
B11f	+5V2
B10	+5V2-STBY
B10	+5V2-STBY_9V-STBY
B04c	+5Va
B05c	+5Va
B11b	+5V-AIO
B11c	+5V-AIO
B11d	+5V-AIO
B07c	+5V-AUD
B04a	+5Vb
B04c	+5Vb
B05c	+5Vb
B09d	+5VDISP
B09f	+5VDISP
B04a	+5VMPIF
B04b	+5VMPIF
B04c	+5VMPIF
B05a	+5VMPIF
B05b	+5VMPIF
B05c	+5VMPIF
B03	+5VTUN
B07a	+5V-UP
B07b	+5V-UP
B07c	+5V-UP
B03	+8V6
B04b	+8V6
B05b	+8V6
B07a	+8V6
B07b	+8V6
B07c	+8V6
B09c	+8V6
B10	+8V6
B11b	+8V6
B11b	+8V6-AIO
B11d	+8V6-AIO
B04c	+8Va
B05c	+8Va
B07c	+8V-AUD
B09c	+8VCRT
B04b	+8VMPIF
B04c	+8VMPIF
B05b	+8VMPIF
B05c	+8VMPIF
B10	+9V-STBY
B03	+VTUN
B10	+VTUN
B03	+VTUN1
B01	12VSWITCH
B07a	12VSWITCH
B04f	1V5-COLUM
B04c	2NDSIFEXT
B05c	2NDSIFEXT
B04f	3V3-COLUM
B04c	4V
B05c	4V
B03	AGC1
B05c	AGC1
B03	AGC2
B04c	AGC2
B06a	A-PLOP
B07c	A-PLOP
B10	A-PLOP
B11b	A-PLOP
B11d	A-PLOP
B11f	A-PLOP
B11f	A-PLOP-HP
B11a	AP-SCART1-OUT-L
B11b	AP-SCART1-OUT-L
B11a	AP-SCART1-OUT-R
B11b	AP-SCART1-OUT-R
B11b	AP-SNDL-MON-OUT
B11b	AP-SNDR-MON-OUT
B11b	AP-SUBW-OUT
B04e	AUDIO-C
B10	AUDIO-C
B04g	AUDIO-CENTER-IN
B05g	AUDIO-CENTER-IN
B11b	AUDIO-CENTER-IN
B04e	AUDIO-HDPH-L
B11f	AUDIO-HDPH-L
B10	AUDIO-HDPH-L-AP
B11f	AUDIO-HDPH-L-AP
B04e	AUDIO-HDPH-R
B11f	AUDIO-HDPH-R
B10	AUDIO-HDPH-R-AP
B11f	AUDIO-HDPH-R-AP
B04g	AUDIO-IN1-L
B05g	AUDIO-IN1-L
B11a	AUDIO-IN1-L
B11d	AUDIO-IN1-L
B04g	AUDIO-IN1-R
B05g	AUDIO-IN1-R
B11a	AUDIO-IN1-R
B11d	AUDIO-IN1-R
B04g	AUDIO-IN2-L
B05g	AUDIO-IN2-L
B11d	AUDIO-IN2-L
B04g	AUDIO-IN2-R
B05g	AUDIO-IN2-R
B11d	AUDIO-IN2-R
B04g	AUDIO-IN3-L
B05g	AUDIO-IN3-L
B11d	AUDIO-IN3-L
B04g	AUDIO-IN3-R
B05g	AUDIO-IN3-R
B11d	AUDIO-IN3-R
B04g	AUDIO-IN4-L
B05g	AUDIO-IN4-L
B11b	AUDIO-IN4-L
B04g	AUDIO-IN4-R
B05g	AUDIO-IN4-R
B11b	AUDIO-IN4-R
B04g	AUDIO-IN5-L
B05g	AUDIO-IN5-L
B10	AUDIO-IN5-L
B04g	AUDIO-IN5-R
B05g	AUDIO-IN5-R
B10	AUDIO-IN5-R
B04e	AUDIO-L
B10	AUDIO-L
B04g	AUDIO-OUT1-L
B11b	AUDIO-OUT1-L
B11d	AUDIO-OUT1-L
B04g	AUDIO-OUT1-R
B11b	AUDIO-OUT1-R
B11d	AUDIO-OUT1-R
B04g	AUDIO-OUT2-L
B11d	AUDIO-OUT2-L
B04g	AUDIO-OUT2-R
B11d	AUDIO-OUT2-R
B04g	AUDIO-OUT3-L
B11b	AUDIO-OUT3-L
B04g	AUDIO-OUT3-R
B11b	AUDIO-OUT3-R
B04e	AUDIO-R
B10	AUDIO-R
B07a	AUDIO-SUPPLY-PROT
B07c	AUDIO-SUPPLY-PROT
B04e	AUDIO-SW
B10	AUDIO-SW
B04e	AUDIO-SW-EXT
B11b	AUDIO-SW-EXT
B04a	AV1_CVBS
B05a	AV1_CVBS
B11a	AV1_CVBS
B11d	AV1_CVBS
B04a	AV1-AV5-AV6_B-PB
B05a	AV1-AV5-AV6_B-PB
B11a	AV1-AV5-AV6_B-PB
B11d	AV1-AV5-AV6_B-PB
B04a	AV1-AV5-AV6_G-Y
B05a	AV1-AV5-AV6_G-Y
B11a	AV1-AV5-AV6_G-Y
B11d	AV1-AV5-AV6_G-Y
B04a	AV1-AV5-AV6_R-PR
B05a	AV1-AV5-AV6_R-PR
B11a	AV1-AV5-AV6_R-PR
B11d	AV1-AV5-AV6_R-PR
B04d	AV1-AV6_FBL-HSYNC
B05d	AV1-AV6_FBL-HSYNC
B11a	AV1-AV6_FBL-HSYNC
B11d	AV1-AV6_FBL-HSYNC
B07a	AV1-STATUS
B11a	AV1-STATUS
B11d	AV1-STATUS
B04a	AV2_C
B05a	AV2_C
B11d	AV2_C
B04d	AV2_FBL
B05d	AV2_FBL
B11d	AV2_FBL
B04a	AV2_Y-CVBS
B05a	AV2_Y-CVBS
B11d	AV2_Y-CVBS
B04a	AV2-AV4_B-PB
B05a	AV2-AV4_B-PB
B11d	AV2-AV4_B-PB
B04a	AV2-AV4_G-Y
B05a	AV2-AV4_G-Y
B11d	AV2-AV4_G-Y
B04a	AV2-AV4_R-PR
B05a	AV2-AV4_R-PR
B11d	AV2-AV4_R-PR
B07a	AV2-STATUS
B11d	AV2-STATUS
B04a	AV3_CVBS
B05a	AV3_CVBS
B11d	AV3_CVBS
B07a	AV3-STATUS
B11d	AV3-STATUS
B04d	AV6_VSYNC
B11d	AV6_VSYNC
B04d	AV6_VSYNC_SUB
B05d	AV6_VSYNC_SUB
B04a	AV7_C
B05a	AV7_C
B11d	AV7_C
B04a	AV7_Y-CVBS
B05a	AV7_Y-CVBS
B11d	AV7_Y-CVBS
B07a	AV7-STATUS
B09c	AV-BOUT
B11e	AVCC
B09c	AV-GOUT
B09c	AV-ROUT
B06c	BACKLIGHT-CNTRL
B07a	BACKLIGHT-CNTRL
B10	BACKLIGHT-CNTRL
B09c	B-CRT
B09e	B-CRT
B04b	CLK-MPIF
B04d	CLK-MPIF
B05b	CLK-MPIF
B05d	CLK-MPIF
B06c	C-MON-OUT
B11d	C-MON-OUT
B04f	COL-CLKO
B04f	COL-DATA-0
B04f	COL-DATA-1
B04f	COL-DATA-2
B04f	COL-DATA-3
B04f	COL-DATA-4
B04f	COL-DATA-5
B04f	COL-DATA-6
B04f	COL-DATA-7
B04f	COL-DATA-8
B04f	COL-DATA-9
B04f	COL-DQN
B04f	COL-SD-A0
B04f	COL-SD-A1
B04f	COL-SD-A10
B04f	COL-SD-A11
B04f	COL-SD-A2
B04f	COL-SD-A3
B04f	COL-SD-A4
B04f	COL-SD-A5
B04f	COL-SD-A6
B04f	COL-SD-A7
B04f	COL-SD-A8
B04f	COL-SD-A9
B04f	COL-SD-CASN
B04f	COL-SD-CLK
B04f	COL-SD-DQ1
B04f	COL-SD-DQ10
B04f	COL-SD-DQ11
B04f	COL-SD-DQ12
B04f	COL-SD-DQ13
B04f	COL-SD-DQ14
B04f	COL-SD-DQ15
B04f	COL-SD-DQ16
B04f	COL-SD-DQ2
B04f	COL-SD-DQ3
B04f	COL-SD-DQ4
B04f	COL-SD-DQ5
B04f	COL-SD-DQ6
B04f	COL-SD-DQ7
B04f	COL-SD-DQ8
B04f	COL-SD-DQ9
B04f	COL-SD-RASN
B04f	COL-SD-WEN
B04f	COL-VALID
B07a	COM-SND
B10	COM-SND
B09a	CTRL-1
B09b	CTRL-1
B09d	CTRL-1
B09a	CTRL-2
B09b	CTRL-2
B09d	CTRL-2
B09a	CTRL-3
B09b	CTRL-3
B09d	CTRL-3
B09d	CTRL-DISP1
B13	CTRL-DISP1
B09d	CTRL-DISP2
B13	CTRL-DISP2
B09d	CTRL-DISP3
B13	CTRL-DISP3
B09d	CTRL-DISP4
B13	CTRL-DISP4
B06a	CTSN-VIPER
B07a	CTSN-VIPER
B04a	CVBS-DTV
B05a	CVBS-DTV
B04a	CVBSOUTIF
B04c	CVBSOUTIF
B05a	CVBSOUTIF
B05c	CVBSOUTIF
B04a	CVBS-OUT-TER
B04c	CVBS-OUT-TER
B05a	CVBS-OUT-TER
B05c	CVBS-OUT-TER
B04a	CVBS-TER-OUT
B05a	CVBS-TER-OUT
B11a	CVBS-TER-OUT
B11d	CVBS-TER-OUT
B06c	DAC-CVBS
B07b	DAC-CVBS
B04a	DATA1N
B04d	DATA1N
B05a	DATA1N
B05d	DATA1N
B04a	DATA1P
B04d	DATA1P
B05a	DATA1P
B05d	DATA1P
B04a	DATA2N
B04d	DATA2N
B05a	DATA2N
B05d	DATA2N
B04a	DATA2P
B04d	DATA2P
B05a	DATA2P
B05d	DATA2P
B04a	DATA3N
B04d	DATA3N
B05a	DATA3N
B05d	DATA3N
B04a	DATA3P
B04d	DATA3P
B05a	DATA3P
B05d	DATA3P
B06a	DEBUG-BREAK
B07a	DEBUG-BREAK
B07a	DETECT-12V
B07c	DETECT-12V
B07a	DETECT-1V2
B07a	DETECT-2V5
B07a	DETECT-3V3
B07a	DETECT-5V
B07c	DETECT-5V
B07a	DETECT-8V6
B07a	DOOR-SWITCH_PD-LVDS
B09b	DOOR-SWITCH_PD-LVDS
B04e	DSNDL1
B04g	DSNDL1
B04e	DSNDL2
B04g	DSNDL2
B04e	DSNDR1
B04g	DSNDR1
B04e	DSNDR2
B04g	DSNDR2
B04f	DV1A-CLK
B06c	DV1A-CLK
B04f	DV1A-DATA0_SOP
B06c	DV1A-DATA0_SOP
B04f	DV1A-DATA1_ERR
B06c	DV1A-DATA1_ERR
B04f	DV1A-DATA2_0
B06c	DV1A-DATA2_0
B04f	DV1A-DATA3_1
B06c	DV1A-DATA3_1
B04f	DV1A-DATA4_2
B06c	DV1A-DATA4_2
B04f	DV1A-DATA5_3
B06c	DV1A-DATA5_3
B04f	DV1A-DATA6_4
B06c	DV1A-DATA6_4
B04f	DV1A-DATA7_5
B06c	DV1A-DATA7_5
B04f	DV1A-DATA8_6
B06c	DV1A-DATA8_6
B04f	DV1A-DATA9_7
B06c	DV1A-DATA9_7
B04f	DV1A-VALID
B06c	DV1A-VALID
B04f	DV1B-DATA0_SOP
B11e	DV1B-DATA0_SOP
B04f	DV1B-DATA1_ERR
B11e	DV1B-DATA1_ERR
B04f	DV1B-DATA2_0
B11e	DV1B-DATA2_0
B04f	DV1B-DATA3_1
B11e	DV1B-DATA3_1
B04f	DV1B-DATA4_2
B11e	DV1B-DATA4_2
B04f	DV1B-DATA5_3
B11e	DV1B-DATA5_3
B04f	DV1B-DATA6_4
B11e	DV1B-DATA6_4
B04f	DV1B-DATA7_5
B11e	DV1B-DATA7_5
B04f	DV1B-DATA8_6
B11e	DV1B-DATA8_6
B04f	DV1B-DATA9_7
B11e	DV1B-DATA9_7
B06c	DV2A-CLK
B11e	DV2A-CLK
B06c	DV2A-DATA0_SOP
B11e	DV2A-DATA0_SOP
B06c	DV2A-DATA1_ERR
B11e	DV2A-DATA1_ERR
B06c	DV2A-DATA2_0
B11e	DV2A-DATA2_0
B06c	DV2A-DATA3_1
B11e	DV2A-DATA3_1
B06c	DV2A-DATA4_2
B11e	DV2A-DATA4_2
B06c	DV2A-DATA5_3
B11e	DV2A-DATA5_3
B06c	DV2A-DATA6_4
B11e	DV2A-DATA6_4
B06c	DV2A-DATA7_5
B11e	DV2A-DATA7_5
B06c	DV2A-DATA8_6
B11e	DV2A-DATA8_6
B06c	DV2A-DATA9_7
B11e	DV2A-DATA9_7
B06c	DV2A-VALID
B05d	DV3A-CLK
B06c	DV3A-CLK
B05d	DV3A-DATA0_SOP
B06c	DV3A-DATA0_SOP
B05d	DV3A-DATA1_ERR
B06c	DV3A-DATA1_ERR
B05d	DV3A-DATA2_0
B06c	DV3A-DATA2_0
B05d	DV3A-DATA3_1
B06c	DV3A-DATA3_1
B05d	DV3A-DATA4_2
B06c	DV3A-DATA4_2
B05d	DV3A-DATA5_3
B06c	DV3A-DATA5_3
B05d	DV3A-DATA6_4
B06c	DV3A-DATA6_4
B05d	DV3A-DATA7_5
B06c	DV3A-DATA7_5
B05d	DV3A-DATA8_6
B06c	DV3A-DATA8_6
B05d	DV3A-DATA9_7
B06c	DV3A-DATA9_7
B05d	DV3A-VALID
B06c	DV3A-VALID
B06c	DV-BOUT-0
B09a	DV-BOUT-0
B09c	DV-BOUT-0
B06c	DV-BOUT-1
B09a	DV-BOUT-1
B09c	DV-BOUT-1
B06c	DV-BOUT-2
B09a	DV-BOUT-2
B09b	DV-BOUT-2
B09c	DV-BOUT-2
B06c	DV-BOUT-3
B09a	DV-BOUT-3
B09b	DV-BOUT-3
B09c	DV-BOUT-3
B06c	DV-BOUT-4
B09a	DV-BOUT-4
B09b	DV-BOUT-4
B09c	DV-BOUT-4
B06c	DV-BOUT-5
B09a	DV-BOUT-5
B09b	DV-BOUT-5
B09c	DV-BOUT-5
B06c	DV-BOUT-6
B09a	DV-BOUT-6
B09b	DV-BOUT-6
B09c	DV-BOUT-6
B06c	DV-BOUT-7
B09a	DV-BOUT-7
B09b	DV-BOUT-7
B09c	DV-BOUT-7
B06c	DV-BOUT-8
B09a	DV-BOUT-8
B09b	DV-BOUT-8
B09c	DV-BOUT-8
B06c	DV-BOUT-9
B09a	DV-BOUT-9
B09b	DV-BOUT-9
B09c	DV-BOUT-9
B09a	DV-CLKCRT
B09c	DV-CLKCRT
B06c	DV-CLKIN
B09a	DV-CLKIN
B09a	DV-CLKMOP
B09b	DV-CLKMOP
B06c	DV-FREF
B06c	DV-GOUT-0
B09a	DV-GOUT-0
B09c	DV-GOUT-0
B06c	DV-GOUT-1
B09a	DV-GOUT-1
B09c	DV-GOUT-1
B06c	DV-GOUT-2
B09a	DV-GOUT-2
B09b	DV-GOUT-2
B09c	DV-GOUT-2
B06c	DV-GOUT-3
B09a	DV-GOUT-3
B09b	DV-GOUT-3
B09c	DV-GOUT-3
B06c	DV-GOUT-4
B09a	DV-GOUT-4
B09b	DV-GOUT-4
B09c	DV-GOUT-4
B06c	DV-GOUT-5
B09a	DV-GOUT-5
B09b	DV-GOUT-5
B09c	DV-GOUT-5
B06c	DV-GOUT-6
B09a	DV-GOUT-6
B09b	DV-GOUT-6
B09c	DV-GOUT-6
B06c	DV-GOUT-7
B09a	DV-GOUT-7
B09b	DV-GOUT-7
B09c	DV-GOUT-7
B06c	DV-GOUT-8
B09a	DV-GOUT-8
B09b	DV-GOUT-8
B09c	DV-GOUT-8
B06c	DV-GOUT-9
B09a	DV-GOUT-9
B09b	DV-GOUT-9
B09c	DV-GOUT-9
B06c	DV-HREF
B11e	DV-HREF
B04d	DVO-CLK
B04f	DVO-CLK
B04d	DVO-DATA-0
B04f	DVO-DATA-0
B04d	DVO-DATA-1
B04f	DVO-DATA-1
B04d	DVO-DATA-2
B04f	DVO-DATA-2
B04d	DVO-DATA-3
B04f	DVO-DATA-3
B04d	DVO-DATA-4
B04f	DVO-DATA-4
B04d	DVO-DATA-5
B04f	DVO-DATA-5
B04d	DVO-DATA-6
B04f	DVO-DATA-6
B04d	DVO-DATA-7
B04f	DVO-DATA-7
B04d	DVO-DATA-8
B04f	DVO-DATA-8
B04d	DVO-DATA-9
B04f	DVO-DATA-9
B06c	DV-OUT-DE
B09a	DV-OUT-DE
B09b	DV-OUT-DE
B06c	DV-OUT-FFIELD
B09a	DV-OUT-FFIELD
B09b	DV-OUT-FFIELD
B06c	DV-OUT-HS
B09a	DV-OUT-HS
B09b	DV-OUT-HS
B06c	DV-OUT-VS
B09a	DV-OUT-VS
B09b	DV-OUT-VS
B04d	DVO-VALID
B04f	DVO-VALID
B06c	DV-ROUT-0
B09a	DV-ROUT-0
B09c	DV-ROUT-0
B06c	DV-ROUT-1
B09a	DV-ROUT-1
B09c	DV-ROUT-1
B06c	DV-ROUT-2
B09a	DV-ROUT-2
B09b	DV-ROUT-2
B09c	DV-ROUT-2
B06c	DV-ROUT-3
B09a	DV-ROUT-3
B09b	DV-ROUT-3
B09c	DV-ROUT-3
B06c	DV-ROUT-4
B09a	DV-ROUT-4
B09b	DV-ROUT-4
B09c	DV-ROUT-4
B06c	DV-ROUT-5
B09a	DV-ROUT-5
B09b	DV-ROUT-5
B09c	DV-ROUT-5
B06c	DV-ROUT-6
B09a	DV-ROUT-6
B09b	DV-ROUT-6
B09c	DV-ROUT-6
B06c	DV-ROUT-7
B09a	DV-ROUT-7
B09b	DV-ROUT-7
B09c	DV-ROUT-7
B06c	DV-ROUT-8
B09a	DV-ROUT-8
B09b	DV-ROUT-8
B09c	DV-ROUT-8
B06c	DV-ROUT-9
B09a	DV-ROUT-9
B09b	DV-ROUT-9
B09c	DV-ROUT-9
B06c	DV-VREF
B11e	DV-VREF
B06e	EJTAG-DETECT
B07a	EJTAG-DETECT
B06a	EJTAG-TCK
B06e	EJTAG-TCK
B06a	EJTAG-TDI
B06e	EJTAG-TDI
B06a	EJTAG-TDO
B06e	EJTAG-TDO
B06a	EJTAG-TMS
B06e	EJTAG-TMS
B01	ENABLE-1V2
B07a	ENABLE-1V2
B01	ENABLE-2V5
B07a	ENABLE-2V5
B01	ENABLE-3V3
B07a	ENABLE-3V3
B09d	ENABLE5V
B04e	EXT-I2S-CLK-B
B07a	FAN-COUNTER_LCD-PWR-ON
B09b	FAN-COUNTER_LCD-PWR-ON
B07a	FAN-SPEED
B06a	FRAME-50-60-VIPER
B06c	FRAME-50-60-VIPER
B04a	FRONT_C
B05a	FRONT_C
B10	FRONT_C
B04a	FRONT_Y-CVBS
B05a	FRONT_Y-CVBS
B10	FRONT_Y-CVBS
B07a	FRONT-DETECT
B10	FRONT-DETECT
B09c	G-CRT
B09e	G-CRT
B06a	GLINK-IR-OUT
B01	GND1V2
B01	GND2V8
B01	GND3V3
B09f	GND5V
B01	GND-HI-LINK
B06a	HDMI-COAST
B06a	HSYNC-HIRATE
B11e	HSYNC-HIRATE
B04a	HV-PRM
B04d	HV-PRM
B05a	HV-PRM
B05d	HV-PRM
B05e	I2S-AUX1-AI
B05f	I2S-AUX1-AI
B05e	I2S-AUX1-AO
B05f	I2S-AUX1-AO
B04e	I2S-AUX-MAIN
B04e	I2S-AUX-MAIN-O
B05f	I2S-AUX-MAIN-O
B04e	I2S-AUX-SUB-O
B05f	I2S-AUX-SUB-O
B05f	I2S-BCLK
B06c	I2S-BCLK
B05e	I2S-BCLK-A
B05f	I2S-BCLK-A
B05f	I2S-BCLK-EL
B04e	I2S-BCLK-M
B05f	I2S-BCLK-M
B04e	I2S-CLK
B05f	I2S-HEADPH-EL
B05f	I2S-MAIN-D
B06c	I2S-MAIN-D
B05e	I2S-MAIN-D-A
B05f	I2S-MAIN-D-A
B04e	I2S-MAIN-D-M
B05f	I2S-MAIN-D-M
B04e	I2S-MAIN-ND
B06c	I2S-MAIN-ND
B04e	I2S-MAIN-ND-B
B05f	I2S-MCH-CSW
B06c	I2S-MCH-CSW
B05e	I2S-MCH-CSW-AI
B05f	I2S-MCH-CSW-AI
B05e	I2S-MCH-CSW-AO
B05f	I2S-MCH-CSW-AO
B04e	I2S-MCH-CSW-BO
B04e	I2S-MCH-CSW-EL
B04e	I2S-MCH-CSW-OA
B05f	I2S-MCH-CSW-OA
B05f	I2S-MCH-LR
B06c	I2S-MCH-LR
B05e	I2S-MCH-LR-AI
B05f	I2S-MCH-LR-AI
B05e	I2S-MCH-LR-AO
B05f	I2S-MCH-LR-AO
B04e	I2S-MCH-LR-BO
B04e	I2S-MCH-LR-EL
B04e	I2S-MCH-LR-OA
B05f	I2S-MCH-LR-OA
B05f	I2S-MCH-SLR
B06c	I2S-MCH-SLR
B05e	I2S-MCH-SLR-AI
B05f	I2S-MCH-SLR-AI
B05e	I2S-MCH-SLR-AO
B05f	I2S-MCH-SLR-AO
B04e	I2S-MCH-SLR-BO
B04e	I2S-MCH-SLR-EL
B04e	I2S-MCH-SLR-OA
B05f	I2S-MCH-SLR-OA
B05f	I2S-SUB-D
B06c	I2S-SUB-D
B05e	I2S-SUB-D-A
B05f	I2S-SUB-D-A
B04e	I2S-SUB-D-M
B05f	I2S-SUB-D-M
B05f	I2S-SUB-ND
B06c	I2S-SUB-ND
B05e	I2S-SUB-ND-A
B05f	I2S-SUB-ND-A
B05f	I2S-WS
B06c	I2S-WS
B05e	I2S-WS-A
B05f	I2S-WS-A
B05f	I2S-WS-EL
B04e	I2S-WS-M
B05f	I2S-WS-M
B03	IF-TER1
B05c	IF-TER1
B03	IF-TER2
B04c	IF-TER2
B11e	IN-5V
B11b	IN-CENTER
B11b	IO-EXP-1
B11c	IO-EXP-1
B11b	IO-EXP-2
B11c	IO-EXP-2
B11b	IO-EXP-3
B11c	IO-EXP-3
B11b	IO-EXP-4
B11c	IO-EXP-4
B11b	IO-EXP-7
B11d	IO-EXP-7
B04d	IRQ-AVIP
B06a	IRQ-AVIP
B05d	IRQ-AVIP-SUB
B06a	IRQ-AVIP-SUB
B06a	IRQ-DOP_LCD-PWR-ON
B09a	IRQ-DOP_LCD-PWR-ON
B09b	IRQ-DOP_LCD-PWR-ON
B09d	IRQ-DOP_LCD-PWR-ON
B06a	IRQ-ETHERNET
B12	IRQ-ETHERNET
B06a	IRQ-HD1
B11a	IRQ-HD1
B06a	IRQ-HD2
B11a	IRQ-HD2
B06a	IRQ-HIRATE
B11e	IRQ-HIRATE
B06a	IRQ-IEEE1394
B06a	IRQ-MAIN
B04b	IRQ-MPIF
B06a	IRQ-MPIF
B05b	IRQ-MPIF-SUB
B06a	IRQ-MPIF-SUB
B06a	IRQ-POD
B06a	IRQ-SPIDER
B08	IRQ-SPIDER
B06a	IRQ-SUB
B06a	IRQ-USB20
B04e	JTAG-TCK
B04f	JTAG-TCK
B05e	JTAG-TCK
B06a	JTAG-TCK
B06e	JTAG-TCK
B09a	JTAG-TCK
B11c	JTAG-TD-ANAIO-DIGIO
B12	JTAG-TD-ANAIO-DIGIO
B05e	JTAG-TD-AVIP1-CONN
B06e	JTAG-TD-AVIP1-CONN
B07a	JTAG-TD-AVIP1-CONN
B04e	JTAG-TD-AVIP2-COLUMBUS2
B04f	JTAG-TD-AVIP2-COLUMBUS2
B04f	JTAG-TD-COL2-MOP
B09a	JTAG-TD-COL2-MOP
B06a	JTAG-TD-CONN-VIPER
B06e	JTAG-TD-CONN-VIPER
B07a	JTAG-TD-CONN-VIPER
B04e	JTAG-TD-DVB-AVIP2
B12	JTAG-TD-DVB-AVIP2
B05e	JTAG-TD-MOP-AVIP1
B09a	JTAG-TD-MOP-AVIP1
B08	JTAG-TD-SPIDER-ANAIO
B11c	JTAG-TD-SPIDER-ANAIO
B06a	JTAG-TD-VIPER-SPIDER
B08	JTAG-TD-VIPER-SPIDER
B04e	JTAG-TMS
B04f	JTAG-TMS
B05e	JTAG-TMS
B06a	JTAG-TMS
B06e	JTAG-TMS
B09a	JTAG-TMS
B04e	JTAG-TRST
B04f	JTAG-TRST
B05e	JTAG-TRST
B06a	JTAG-TRST
B06e	JTAG-TRST
B09a	JTAG-TRST
B07a	KEYBOARD
B10	KEYBOARD
B07a	LAMP-ON
B10	LAMP-ON
B09a	LCD-PWR-ON
B09b	LCD-PWR-ON
B09d	LCD-PWR-ON
B07a	LED1
B10	LED1
B07a	LED2
B10	LED2
B07a	LIGHT-SENSOR
B10	LIGHT-SENSOR
B09a	LV-BOUT-0
B09b	LV-BOUT-0
B09d	LV-BOUT-0
B09e	LV-BOUT-0
B09a	LV-BOUT-1
B09b	LV-BOUT-1
B09d	LV-BOUT-1
B09e	LV-BOUT-1
B09a	LV-BOUT-2
B09b	LV-BOUT-2
B09d	LV-BOUT-2
B09e	LV-BOUT-2
B09a	LV-BOUT-3
B09b	LV-BOUT-3
B09d	LV-BOUT-3
B09e	LV-BOUT-3
B09a	LV-BOUT-4
B09b	LV-BOUT-4
B09d	LV-BOUT-4
B09e	LV-BOUT-4
B09a	LV-BOUT-5
B09b	LV-BOUT-5
B09d	LV-BOUT-5
B09e	LV-BOUT-5
B09a	LV-BOUT-6
B09b	LV-BOUT-6
B09d	LV-BOUT-6
B09e	LV-BOUT-6
B09a	LV-BOUT-7
B09b	LV-BOUT-7
B09d	LV-BOUT-7
B09e	LV-BOUT-7
B09a	LV-CLKIN
B09b	LV-CLKIN
B09d	LV-CLKIN
B09e	LV-CLKIN
B09d	LVDSA-
B13	LVDSA-
B09d	LVDSA+
B13	LVDSA+
B09d	LVDSB-
B13	LVDSB-
B09d	LVDSB+
B13	LVDSB+
B09d	LVDSC-
B13	LVDSC-
B09d	LVDSC+
B13	LVDSC+
B09d	LVDSCLK-
B13	LVDSCLK-
B09d	LVDSCLK+
B13	LVDSCLK+
B09d	LVDSD-
B13	LVDSD-
B09d	LVDSD+
B13	LVDSD+
B05a	LVDSE-
B05b	LVDSE-
B05c	LVDSE-
B05d	LVDSE-
B05e	LVDSE-
B05g	LVDSE-
B09a	LVDSE-
B09b	LVDSE-
B09c	LVDSE-
B09d	LVDSE-
B09e	LVDSE-
B09f	LVDSE-
B13	LVDSE-
B05a	LVDSE+
B05b	LVDSE+
B05c	LVDSE+
B05d	LVDSE+
B05e	LVDSE+
B05g	LVDSE+
B09a	LVDSE+
B09b	LVDSE+
B09c	LVDSE+
B09d	LVDSE+
B09e	LVDSE+
B09f	LVDSE+
B13	LVDSE+
B09a	LV-GOUT-0
B09b	LV-GOUT-0
B09d	LV-GOUT-0
B09e	LV-GOUT-0
B09a	LV-GOUT-1
B09b	LV-GOUT-1
B09d	LV-GOUT-1
B09e	LV-GOUT-1
B09a	LV-GOUT-2
B09b	LV-GOUT-2
B09d	LV-GOUT-2
B09e	LV-GOUT-2
B09a	LV-GOUT-3
B09b	LV-GOUT-3
B09d	LV-GOUT-3
B09e	LV-GOUT-3
B09a	LV-GOUT-4
B09b	LV-GOUT-4
B09d	LV-GOUT-4
B09e	LV-GOUT-4
B09a	LV-GOUT-5
B09b	LV-GOUT-5
B09d	LV-GOUT-5
B09e	LV-GOUT-5
B09a	LV-GOUT-6
B09b	LV-GOUT-6
B09d	LV-GOUT-6
B09e	LV-GOUT-6
B09a	LV-GOUT-7
B09b	LV-GOUT-7
B09d	LV-GOUT-7
B09e	LV-GOUT-7
B09a	LV-OUT-DE
B09b	LV-OUT-DE
B09d	LV-OUT-DE
B09e	LV-OUT-DE
B09a	LV-OUT-FFIELD
B09b	LV-OUT-FFIELD
B09d	LV-OUT-FFIELD
B09a	LV-OUT-HS
B09b	LV-OUT-HS
B09d	LV-OUT-HS
B09e	LV-OUT-HS
B09a	LV-OUT-VS
B09b	LV-OUT-VS
B09d	LV-OUT-VS
B09e	LV-OUT-VS
B09a	LV-ROUT-0
B09b	LV-ROUT-0
B09d	LV-ROUT-0
B09e	LV-ROUT-0
B09a	LV-ROUT-1
B09b	LV-ROUT-1
B09d	LV-ROUT-1
B09e	LV-ROUT-1
B09a	LV-ROUT-2
B09b	LV-ROUT-2
B09d	LV-ROUT-2
B09e	LV-ROUT-2
B09a	LV-ROUT-3
B09b	LV-ROUT-3
B09d	LV-ROUT-3
B09e	LV-ROUT-3
B09a	LV-ROUT-4
B09b	LV-ROUT-4
B09d	LV-ROUT-4
B09e	LV-ROUT-4
B09a	LV-ROUT-5
B09b	LV-ROUT-5
B09d	LV-ROUT-5
B09e	LV-ROUT-5
B09a	LV-ROUT-6
B09b	LV-ROUT-6
B09d	LV-ROUT-6
B09e	LV-ROUT-6
B09a	LV-ROUT-7
B09b	LV-ROUT-7
B09d	LV-ROUT-7
B09e	LV-ROUT-7
B04d	M135-CLK
B05d	M135-CLK
B06a	M135-CLK
B06a	M27-CLK
B09a	M27-CLK
B06b	MM_A0
B06b	MM_A1
B06b	MM_A10
B06b	MM_A11
B06b	MM_A12
B06b	MM_A2
B06b	MM_A3
B06b	MM_A4
B06b	MM_A5
B06b	MM_A6
B06b	MM_A7
B06b	MM_A8
B06b	MM_A9
B06b	MM_BA0
B06b	MM_BA1
B06b	MM_CAS
B06b	MM_CKE
B06b	MM_CLK_N
B06b	MM_CLK_P
B06b	MM_CS0
B06b	MM_DATA_0
B06b	MM_DATA_1
B06b	MM_DATA_10
B06b	MM_DATA_11
B06b	MM_DATA_12
B06b	MM_DATA_13
B06b	MM_DATA_14
B06b	MM_DATA_15
B06b	MM_DATA_16
B06b	MM_DATA_17
B06b	MM_DATA_18
B06b	MM_DATA_19
B06b	MM_DATA_2
B06b	MM_DATA_20
B06b	MM_DATA_21
B06b	MM_DATA_22
B06b	MM_DATA_23
B06b	MM_DATA_24
B06b	MM_DATA_25
B06b	MM_DATA_26
B06b	MM_DATA_27
B06b	MM_DATA_28
B06b	MM_DATA_29
B06b	MM_DATA_3
B06b	MM_DATA_30
B06b	MM_DATA_31
B06b	MM_DATA_4
B06b	MM_DATA_5
B06b	MM_DATA_6
B06b	MM_DATA_7
B06b	MM_DATA_8
B06b	MM_DATA_9
B06b	MM_DQM_0
B06b	MM_DQM_1
B06b	MM_DQM_2
B06b	MM_DQM_3
B06b	MM_DQS0
B06b	MM_DQS1
B06b	MM_DQS2
B06b	MM_DQS3
B06b	MM_RAS
B06b	MM_WE
B07a	NA1
B07a	NA3
B07a	NA4
B07a	NA5
B07b	NAND_ALE
B07b	NAND_CLE
B07b	NAND_RE_N
B07b	NAND_WE_N
B07b	NAND-AD(0)
B07b	NAND-AD(1)
B07b	NAND-AD(2)
B07b	NAND-AD(3)
B07b	NAND-AD(4)
B07b	NAND-AD(5)
B07b	NAND-AD(6)
B07b	NAND-AD(7)
B07b	NAND-D(10)
B07b	NAND-D(11)
B07b	NAND-D(12)
B07b	NAND-D(13)
B07b	NAND-D(14)
B07b	NAND-D(15)
B07b	NAND-D(8)
B07b	NAND-D(9)
B11e	OVCC
B07a	P50
B11d	P50
B07a	P50-HDMI
B11e	P50-HDMI
B06a	PCI-AD0
B07b	PCI-AD0
B11a	PCI-AD0
B12	PCI-AD0
B06a	PCI-AD1
B07b	PCI-AD1
B11a	PCI-AD1
B12	PCI-AD1
B06a	PCI-AD10
B11a	PCI-AD10
B12	PCI-AD10
B06a	PCI-AD11
B11a	PCI-AD11
B12	PCI-AD11
B06a	PCI-AD12
B11a	PCI-AD12
B12	PCI-AD12
B06a	PCI-AD13
B11a	PCI-AD13
B12	PCI-AD13
B06a	PCI-AD14
B11a	PCI-AD14
B12	PCI-AD14
B06a	PCI-AD15
B11a	PCI-AD15
B12	PCI-AD15
B06a	PCI-AD16
B07b	PCI-AD16
B11a	PCI-AD16
B12	PCI-AD16
B06a	PCI-AD17
B07b	PCI-AD17
B11a	PCI-AD17
B12	PCI-AD17
B06a	PCI-AD18
B07b	PCI-AD18
B11a	PCI-AD18
B12	PCI-AD18
B06a	PCI-AD19
B07b	PCI-AD19
B11a	PCI-AD19
B12	PCI-AD19
B06a	PCI-AD2
B11a	PCI-AD2
B12	PCI-AD2
B06a	PCI-AD20
B07b	PCI-AD20
B11a	PCI-AD20
B12	PCI-AD20
B06a	PCI-AD21
B07b	PCI-AD21
B11a	PCI-AD21
B12	PCI-AD21
B06a	PCI-AD22
B07b	PCI-AD22
B11a	PCI-AD22
B12	PCI-AD22
B06a	PCI-AD23
B07b	PCI-AD23
B11a	PCI-AD23
B12	PCI-AD23
B06a	PCI-AD24
B07b	PCI-AD24
B11a	PCI-AD24
B12	PCI-AD24
B06a	PCI-AD25
B07b	PCI-AD25
B11a	PCI-AD25
B12	PCI-AD25
B06a	PCI-AD26
B07b	PCI-AD26
B11a	PCI-AD26
B12	PCI-AD26
B06a	PCI-AD27
B07b	PCI-AD27
B11a	PCI-AD27
B12	PCI-AD27
B06a	PCI-AD28
B07b	PCI-AD28
B11a	PCI-AD28
B12	PCI-AD28
B06a	PCI-AD29
B07b	PCI-AD29
B11a	PCI-AD29
B12	PCI-AD29
B06a	PCI-AD3
B11a	PCI-AD3
B12	PCI-AD3
B06a	PCI-AD30
B07b	PCI-AD30
B11a	PCI-AD30
B12	PCI-AD30
B06a	PCI-AD31
B07b	PCI-AD31
B11a	PCI-AD31
B12	PCI-AD31
B06a	PCI-AD4
B11a	PCI-AD4
B12	PCI-AD4
B06a	PCI-AD5
B11a	PCI-AD5
B12	PCI-AD5
B06a	PCI-AD6
B11a	PCI-AD6
B12	PCI-AD6
B06a	PCI-AD7
B11a	PCI-AD7
B12	PCI-AD7
B06a	PCI-AD8
B11a	PCI-AD8
B12	PCI-AD8
B06a	PCI-AD9
B11a	PCI-AD9
B12	PCI-AD9
B06a	PCI-CBE0
B11a	PCI-CBE0
B12	PCI-CBE0
B06a	PCI-CBE1
B07b	PCI-CBE1
B11a	PCI-CBE1
B12	PCI-CBE1
B06a	PCI-CBE2
B07b	PCI-CBE2
B11a	PCI-CBE2
B12	PCI-CBE2
B06a	PCI-CBE3
B11a	PCI-CBE3
B12	PCI-CBE3
B07b	PCI-CLK-ETHERNET
B12	PCI-CLK-ETHERNET
B07b	PCI-CLK-IEEE1394
B07b	PCI-CLK-SLOT
B11a	PCI-CLK-SLOT
B07b	PCI-CLK-USB20
B06a	PCI-CLK-VPR
B07b	PCI-CLK-VPR
B06a	PCI-DEVSEL
B07b	PCI-DEVSEL
B11a	PCI-DEVSEL
B12	PCI-DEVSEL
B06a	PCI-FRAME
B07b	PCI-FRAME
B11a	PCI-FRAME
B12	PCI-FRAME
B06a	PCI-GNT
B11a	PCI-GNT
B06a	PCI-GNT-A
B11a	PCI-GNT-A
B12	PCI-GNT-A
B06a	PCI-GNT-B
B11a	PCI-GNT-B
B06a	PCI-INTA
B11a	PCI-INTA
B06a	PCI-IRDY
B07b	PCI-IRDY
B11a	PCI-IRDY
B12	PCI-IRDY
B06a	PCI-PAR
B11a	PCI-PAR
B12	PCI-PAR
B06a	PCI-PERR
B07b	PCI-PERR
B11a	PCI-PERR
B12	PCI-PERR
B06a	PCI-REQ
B11a	PCI-REQ
B06a	PCI-REQ-A
B11a	PCI-REQ-A
B12	PCI-REQ-A
B06a	PCI-REQ-B
B11a	PCI-REQ-B
B06a	PCI-SERR
B07b	PCI-SERR
B11a	PCI-SERR
B12	PCI-SERR
B06a	PCI-STOP
B07b	PCI-STOP
B11a	PCI-STOP
B12	PCI-STOP
B06a	PCI-TRDY
B07b	PCI-TRDY
B11a	PCI-TRDY
B12	PCI-TRDY
B09a	PD-EPLD
B09a	PD-LVDS
B09b	PD-LVDS
B09c	PD-LVDS
B09d	PD-LVDS
B09e	PD-LVDS
B06c	PD-LVDS-VIPER
B09b	PD-LVDS-VIPER
B09d	PD-LVDS-VIPER
B09e	PD-TMDS
B06a	PLL-OUT
B07b	PLL-OUT
B06a	POR
B07a	POR
B10	POR
B06a	POWERDOWN-1394
B09b	POWER-OK
B09f	PROT_DC
B07a	PROT-AUDIOSUPPLY
B10	PROT-AUDIOSUPPLY
B01	PROT-DC
B07a	PROX-PWM
B11e	PVCC2-SI
B07a	PWR-OK-PDP
B10	PWR-OK-PDP
B07a	RC
B10	RC
B09c	R-CRT
B09e	R-CRT
B06a	REGIMBEAU
B11d	REGIMBEAU
B06a	RESET-1394
B07a	RESET-AUDIO
B07c	RESET-AUDIO
B06a	RESET-ETHERNET
B12	RESET-ETHERNET
B06a	RESET-FE-MAIN
B06a	RESET-FE-SUB
B04d	RESET-MIPS
B04f	RESET-MIPS
B05d	RESET-MIPS
B06a	RESET-MIPS
B07a	RESET-MIPS
B11e	RESET-MIPS
B06a	RESET-POD-CI
B06a	RESET-SYSTEM
B06e	RESET-SYSTEM
B07a	RESET-SYSTEM
B11a	RESET-SYSTEM
B06a	RESET-TM
B08	RESET-TM
B07a	RESET-UP-IN
B06a	RESET-USB20
B06a	RTSN-VIPER
B07a	RTSN-VIPER
B11e	RX0-
B11e	RX0+
B11e	RX1-
B11e	RX1+
B11e	RX2-
B11e	RX2+
B11e	RXC-
B11e	RXC+
B07a	RXD
B08	RXD
B11a	RXD
B11e	RX-DDC-SCL
B11e	RX-DDC-SDA
B07a	RXD-UP
B06a	RXD-VIPER
B07a	RXD-VIPER
B11b	RX-HOTPLUG
B11e	RX-HOTPLUG
B07a	SAM
B06a	SCL-DMA
B06e	SCL-DMA
B07a	SCL-DMA
B07a	SCL-DMA-BUS1
B08	SCL-DMA-BUS1
B09a	SCL-DMA-BUS1
B09b	SCL-DMA-BUS1
B09d	SCL-DMA-BUS1
B09d	SCL-DMA-BUS1-DISP
B13	SCL-DMA-BUS1-DISP
B04b	SCL-DMA-BUS2
B04d	SCL-DMA-BUS2
B04f	SCL-DMA-BUS2
B05b	SCL-DMA-BUS2
B05d	SCL-DMA-BUS2
B07a	SCL-DMA-BUS2
B06a	SCL-I2C4
B06e	SCL-I2C4
B06a	SCL-MM
B06e	SCL-MM
B07a	SCL-MM
B07a	SCL-MM-BUS1
B11e	SCL-MM-BUS1
B03	SCL-MM-BUS2
B07a	SCL-MM-BUS2
B10	SCL-MM-BUS2
B11b	SCL-MM-BUS2
B11d	SCL-MM-BUS2
B03	SCL-SUB
B06a	SCL-UP-VIP
B06e	SCL-UP-VIP
B07a	SCL-UP-VIP
B04b	SDAC-VDDD
B04e	SDAC-VDDD
B05b	SDAC-VDDD
B05e	SDAC-VDDD
B06a	SDA-DMA
B06e	SDA-DMA
B07a	SDA-DMA
B07a	SDA-DMA-BUS1
B08	SDA-DMA-BUS1
B09a	SDA-DMA-BUS1
B09b	SDA-DMA-BUS1
B09d	SDA-DMA-BUS1
B09d	SDA-DMA-BUS1-DISP
B13	SDA-DMA-BUS1-DISP
B04b	SDA-DMA-BUS2
B04d	SDA-DMA-BUS2
B04f	SDA-DMA-BUS2
B05b	SDA-DMA-BUS2
B05d	SDA-DMA-BUS2
B07a	SDA-DMA-BUS2
B06a	SDA-I2C4
B06e	SDA-I2C4
B06a	SDA-MM
B06e	SDA-MM
B07a	SDA-MM
B07a	SDA-MM-BUS1
B11e	SDA-MM-BUS1
B03	SDA-MM-BUS2
B07a	SDA-MM-BUS2
B10	SDA-MM-BUS2
B11b	SDA-MM-BUS2
B11d	SDA-MM-BUS2
B03	SDA-SUB
B06a	SDA-UP-VIP
B06e	SDA-UP-VIP
B07a	SDA-UP-VIP
B07a	SDM
B06a	SEL-DV1F
B06a	SEL-DV3F
B05c	SEL-IF-LL1
B06a	SEL-IF-LL1
B04c	SEL-IF-LL2
B06a	SEL-IF-LL2
B06a	SOUND-ENABLE
B10	SOUND-ENABLE
B06a	SOUND-ENABLE-VPR
B11c	SPDIF-HDMI
B11e	SPDIF-HDMI
B06c	SPDIF-IN1
B11c	SPDIF-IN1
B06c	SPDIF-IN2
B11c	SPDIF-IN2
B11c	SPDIF-OPT-IN
B11d	SPDIF-OPT-IN
B06c	SPDIF-OUT1
B11c	SPDIF-OUT1
B11d	SPDIF-OUT1
B11c	SPDIF-SEL-OUT1
B11c	SPDIF-SEL-OUT2
B11b	SPI-1
B11c	SPI-1
B11d	SPI-1
B11b	SPI-2
B11c	SPI-2
B11b	SPI-OUT
B11c	SPI-OUT
B07a	STANDBY
B10	STANDBY
B07a	STBY-WP-NANDFLASH
B07b	STBY-WP-NANDFLASH
B04a	STROBE1N
B04d	STROBE1N
B05a	STROBE1N
B05d	STROBE1N
B04a	STROBE1P
B04d	STROBE1P
B05a	STROBE1P
B05d	STROBE1P
B04a	STROBE2N
B04d	STROBE2N
B05a	STROBE2N
B05d	STROBE2N
B04a	STROBE2P
B04d	STROBE2P
B05a	STROBE2P
B05d	STROBE2P
B04a	STROBE3N
B04d	STROBE3N
B05a	STROBE3N
B05d	STROBE3N
B04a	STROBE3P
B04d	STROBE3P
B05a	STROBE3P
B05d	STROBE3P
B01	SUPPLY-FAULT
B07a	SUPPLY-FAULT
B09f	SUPPLY-FAULT
B07a	TEMP-SENSOR
B10	TEMP-SENSOR
B06c	TS-CLK
B06c	TS-DATA0
B06c	TS-DATA1
B06c	TS-DATA2
B06c	TS-DATA3
B06c	TS-DATA4
B06c	TS-DATA5
B06c	TS-DATA6
B06c	TS-DATA7
B06c	TS-SOP
B06c	TS-VALID
B06c	TUN-VIPER-AVREF
B08	TUN-VIPER-AVREF
B06c	TUN-VIPER-RX-BUSY
B08	TUN-VIPER-RX-BUSY
B06c	TUN-VIPER-RX-CLKP
B08	TUN-VIPER-RX-CLKP
B06c	TUN-VIPER-RX-DATA0
B08	TUN-VIPER-RX-DATA0
B06c	TUN-VIPER-RX-DATA1
B08	TUN-VIPER-RX-DATA1
B06c	TUN-VIPER-RX-DATA10
B08	TUN-VIPER-RX-DATA10
B06c	TUN-VIPER-RX-DATA11
B08	TUN-VIPER-RX-DATA11
B06c	TUN-VIPER-RX-DATA12
B08	TUN-VIPER-RX-DATA12
B06c	TUN-VIPER-RX-DATA13
B08	TUN-VIPER-RX-DATA13
B06c	TUN-VIPER-RX-DATA14
B08	TUN-VIPER-RX-DATA14
B06c	TUN-VIPER-RX-DATA15
B08	TUN-VIPER-RX-DATA15
B06c	TUN-VIPER-RX-DATA2
B08	TUN-VIPER-RX-DATA2
B06c	TUN-VIPER-RX-DATA3
B08	TUN-VIPER-RX-DATA3
B06c	TUN-VIPER-RX-DATA4
B08	TUN-VIPER-RX-DATA4
B06c	TUN-VIPER-RX-DATA5
B08	TUN-VIPER-RX-DATA5
B06c	TUN-VIPER-RX-DATA6
B08	TUN-VIPER-RX-DATA6
B06c	TUN-VIPER-RX-DATA7
B08	TUN-VIPER-RX-DATA7
B06c	TUN-VIPER-RX-DATA8
B08	TUN-VIPER-RX-DATA8
B06c	TUN-VIPER-RX-DATA9
B08	TUN-VIPER-RX-DATA9
B06c	TUN-VIPER-TX-BUSY
B08	TUN-VIPER-TX-BUSY
B06c	TUN-VIPER-TX-CLKN
B08	TUN-VIPER-TX-CLKN
B06c	TUN-VIPER-TX-CLKP
B08	TUN-VIPER-TX-CLKP
B06c	TUN-VIPER-TX-DATA0
B08	TUN-VIPER-TX-DATA0
B06c	TUN-VIPER-TX-DATA1
B08	TUN-VIPER-TX-DATA1
B06c	TUN-VIPER-TX-DATA10
B08	TUN-VIPER-TX-DATA10
B06c	TUN-VIPER-TX-DATA11
B08	TUN-VIPER-TX-DATA11
B06c	TUN-VIPER-TX-DATA12
B08	TUN-VIPER-TX-DATA12
B06c	TUN-VIPER-TX-DATA13
B08	TUN-VIPER-TX-DATA13
B06c	TUN-VIPER-TX-DATA14
B08	TUN-VIPER-TX-DATA14
B06c	TUN-VIPER-TX-DATA15
B08	TUN-VIPER-TX-DATA15
B06c	TUN-VIPER-TX-DATA2
B08	TUN-VIPER-TX-DATA2
B06c	TUN-VIPER-TX-DATA3
B08	TUN-VIPER-TX-DATA3
B06c	TUN-VIPER-TX-DATA4
B08	TUN-VIPER-TX-DATA4
B06c	TUN-VIPER-TX-DATA5
B08	TUN-VIPER-TX-DATA5
B06c	TUN-VIPER-TX-DATA6
B08	TUN-VIPER-TX-DATA6
B06c	TUN-VIPER-TX-DATA7
B08	TUN-VIPER-TX-DATA7
B06c	TUN-VIPER-TX-DATA8
B08	TUN-VIPER-TX-DATA8
B06c	TUN-VIPER-TX-DATA9
B08	TUN-VIPER-TX-DATA9
B07a	TXD
B08	TXD
B11a	TXD
B07a	TXD-UP
B06a	TXD-VIPER
B07a	TXD-VIPER
B06a	UART1-RXD
B08	UART1-RXD
B06a	UART1-TXD
B08	UART1-TXD
B07a	UART-SWITCH
B07a	UART-SWITCHn
B06a	USB06a-DM
B06a	USB06a-DP
B06a	USB06b-DM
B06a	USB06b-DP
B06a	USB-BUS-PW
B06a	USB-OVERCUR
B04f	VDD-COL-MEM2
B09d	VDISP
B13	VDISP
B09d	VDISP2
B13	VDISP2
B01	V-HI-LINK
B03	VISUAL-CHECK
B04c	VISUAL-CHECK
B04b	VREF-AUD-POS
B06b	VREF-DDR
B08	VREF-DDR
B08	VREFS
B06a	VSYNC-HIRATE
B11e	VSYNC-HIRATE
B08	VTT
B06b	VTT-TERM-DDR
B06a	XIO-A25
B06a	XIO-ACK
B07b	XIO-ACK
B06a	XIO-D10
B06a	XIO-D11
B06a	XIO-D12
B06a	XIO-D13
B06a	XIO-D14
B06a	XIO-D15
B06a	XIO-D8
B06a	XIO-D9
B06a	XIO-SEL0
B07b	XIO-SEL0
B06a	XIO-SEL1
B06a	XIO-SEL2
B06a	XIO-SEL3
B06a	XIO-SEL4
B07b	Y-CVBS-MON-OUT
B11d	Y-CVBS-MON-OUT

E_14700_093.eps
151104

Layout Small Signal Board (Overview Top Side)

1A33 B5, 1A51 C5, 1A52 C5, 1A53 C5, 1A55 B5, 1C33 B3, 1C51 C2, 1C52 C2, 1C53 C3, 1C55 C3, 1D00 E3, 1E00 A5, 1E10 A7, 1E11 A6

1E12 A6, 1E13 A6, 1E35 A9, 1E55 B8, 1E60 B9, 1E61 B9, 1E65 A6, 1G03 F3, 1G05 E4, 1G21 F3, 1G22 F3, 1G23 F3, 1G24 F3, 1H00 F7

1H01 F5, 1H03 F7, 1H04 F7, 1H05 F7, 1K00 B3, 1M01 D9, 1M03 E9, 1M15 A9, 1M17 F8, 1M20 D9, 1M36 C9, 1M46 F8, 1M52 F2, 1O00 A4

1O10 A4, 1R00 E8, 1T02 A2, 1T03 A2, 1U01 D8, 1U04 D8, 1Y00 B5, 2A04 C5, 2A07 B4, 2A09 C4, 2A21 C5, 2A22 C5, 2A23 C5, 2A24 B4

2A25 C5, 2A27 C5, 2A31 C4, 2A34 B5, 2A35 C5, 2A36 C5, 2A38 B6, 2A39 C5, 2A50 C4, 2A52 B5, 2A56 C5, 2A57 C4, 2A65 C4, 2A66 C5

2A68 C4, 2A70 B5, 2A72 B5, 2A73 B5, 2A75 B5, 2A76 C4, 2A77 C4, 2A79 C4, 2C04 C3, 2C10 C2, 2C11 B3, 2C14 B3, 2C21 D3, 2C22 C3

2C23 C3, 2C24 B2, 2C27 C3, 2C29 C3, 2C31 B3, 2C32 B3, 2C33 B4, 2C34 B3, 2C35 C3, 2C36 C3, 2C38 B4, 2C39 B3, 2C40 C3, 2C45 C3

2C50 C2, 2C52 B2, 2C57 C2, 2C63 C2, 2C65 C2, 2C68 C2, 2C70 B3, 2C72 B3, 2C73 B3, 2C75 B2, 2C76 B2, 2C77 B2, 2C79 C2, 2D06 E4

2D07 E4, 2D08 E4, 2D10 E3, 2D19 E4, 2D26 F4, 2D33 E3, 2D34 E3, 2D37 E3, 2D38 E3, 2D42 E3, 2D43 E3, 2D48 F3, 2E00 A9, 2E01 A9

2E02 A9, 2E03 A9, 2E04 A9, 2E05 A9, 2E06 A9, 2E07 B9, 2E09 B9, 2E12 B9, 2E23 A6, 2E29 A6, 2E31 A7, 2E35 A6, 2E36 A6, 2E39 A6

2E42 A7, 2E43 A7, 2E44 A6, 2E48 A6, 2E53 B9, 2E54 A9, 2E56 A9, 2E58 A9, 2E60 A9, 2E62 A9, 2E64 A9, 2E66 A9, 2E68 A9, 2E70 A9

2E72 A9, 2E74 A9, 2E76 A9, 2E78 A9, 2E80 A9, 2E81 B9, 2E85 B9, 2E87 B9, 2E89 B9, 2E90 A9, 2E91 B9, 2E92 A9, 2E93 A9, 2E94 A9

2E95 A9, 2E96 A9, 2E97 A9, 2E98 A9, 2E99 A9, 2F11 B7, 2F17 B7, 2F18 B7, 2F20 B7, 2F25 C6, 2G01 E5, 2G02 E5, 2G03 D5, 2G04 D5

2G05 E5, 2G06 E5, 2G07 E5, 2G08 E5, 2G09 E6, 2G10 E6, 2G11 D5, 2G12 D5, 2G13 E5, 2G14 E4, 2G15 E5, 2G16 E5, 2G17 D5, 2G18 E6

2G19 E5, 2G21 F5, 2G22 E5, 2G24 F5, 2G29 F5, 2G30 F5, 2G32 E5, 2G33 E4, 2G37 F4, 2G40 F5, 2G41 F5, 2G42 F5, 2G43 F5, 2G44 F5

2G45 F5, 2G46 F5, 2G47 F5, 2G48 F5, 2G49 F5, 2G50 E5, 2G52 E5, 2G54 E5, 2G55 F5, 2G57 E4, 2G58 E5, 2G67 E5, 2G69 E5, 2G71 E4

2G72 E4, 2G73 E6, 2G74 E4, 2G75 E4, 2G76 F4, 2G77 F4, 2G79 E4, 2G80 E4, 2G82 E4, 2G83 E5, 2G88 F5, 2G89 F5, 2G90 F4, 2H08 F7

2H09 F7, 2H15 F8, 2H16 F8, 2H17 F8, 2I02 A8, 2I15 A6, 2I16 A7, 2I22 A7, 2I31 A6, 2I46 A6, 2I47 A6, 2I48 A6, 2I49 A6, 2I58 A8

2I59 A8, 2I60 A6, 2I71 A9, 2I73 A8, 2I87 A5, 2I89 A5, 2I90 A8, 2I95 A5, 2J00 C4, 2J02 C4, 2J03 C4, 2J07 C3, 2J08 C4, 2J09 C3

2J12 C4, 2J13 C3, 2J14 C4, 2J17 C4, 2J18 C4, 2J19 C4, 2J26 C4, 2J36 C4, 2J37 C3, 2J38 C4, 2J39 C3, 2J41 C4, 2J42 C4, 2J44 C3

2J45 C3, 2J46 C3, 2J80 D3, 2K00 B4, 2K01 B3, 2K02 C3, 2K03 B3, 2K04 C3, 2K07 C4, 2K09 C4, 2K12 C3, 2K14 C3, 2K15 C4, 2K17 C3

2K19 C4, 2K24 C3, 2K25 C3, 2K26 C3, 2K27 C3, 2K28 B3, 2K29 B3, 2K33 C3, 2K34 B3, 2K42 D3, 2K43 C3, 2K46 D2, 2K48 D2, 2K49 C3

2K50 D2, 2K51 C3, 2K52 D2, 2K53 C3, 2K56 C3, 2K57 C3, 2K58 C3, 2K59 C3, 2K60 C3, 2K61 C3, 2K62 C3, 2K64 C3, 2L26 C6, 2M03 E9

2M04 E9, 2M06 E9, 2M07 F9, 2M08 F9, 2M09 E9, 2M13 D9, 2M14 C9, 2M15 D9, 2M47 D9, 2M49 F9, 2M59 E9, 2M63 C9, 2M64 D9, 2M67 F9

2M69 F8, 2M72 F9, 2M73 F9, 2M74 F9, 2M75 F8, 2M76 F8, 2M78 F8, 2M80 E9, 2M81 D9, 2M82 E9, 2M85 F9, 2N20 C7, 2N21 C6, 2N22 C6

2N23 B7, 2N32 C7, 2N34 C7, 2N35 C7, 2N36 C7, 2N40 C7, 2N41 C7, 2N42 C7, 2N43 C7, 2O00 A4, 2O01 A4, 2O02 A4, 2O03 A4, 2O04 A4

2O05 A4, 2O06 A4, 2O07 A4, 2O10 A4, 2O11 A4, 2O12 A4, 2O14 A4, 2O15 A4, 2O16 A4, 2O17 A4, 2O18 A4, 2O19 A4, 2O20 A4, 2O21 A4

2O24 A4, 2O25 A5, 2O26 A5, 2R00 E9, 2R03 E9, 2R14 E8, 2R20 F8, 2R21 F8, 2R22 F8, 2R23 F8, 2R24 F8, 2U37 C7, 2U38 D8, 2U39 E9

2U59 D8, 2U60 C9, 2U61 C8, 2U62 C9, 2U63 C8, 2U66 C8, 2U67 C9, 2U69 D8, 2U70 D9, 2U73 C9, 2U74 C9, 2U75 D9, 2U76 D9, 2U77 D9, 2U78 D9, 2U79 C8, 2U80 D8, 2U81 E8, 2V00 F6, 2V01 F7, 2V05 E7, 2V16 E6, 2V17 E7, 2V18 E7, 2V19 F7, 2V20 F6, 2V21 F6, 2V22 E7, 2V23 E7, 2V24 E6, 2V25 E6, 2V26 E7, 2V27 E7, 2V28 E6, 2V29 E6, 2V30 E7, 2V31 E6, 2V34 E7, 2Y00 B5, 2Y01 B5, 2Y02 C5, 2Y03 B5, 2Y04 B5, 2Y07 C6, 2Y09 C6, 2Y12 C5, 2Y14 C5, 2Y15 C6, 2Y17 C5, 2Y19 C6, 2Y22 C6, 2Y23 B5, 2Y24 C5, 2Y25 C5, 2Y26 C5, 2Y27 C5, 2Y28 B5, 2Y29 B5, 2Y31 B5, 2Y33 B5, 2Y42 C6, 2Y49 C5, 2Y51 C5, 2Y53 C5, 2Y56 C5, 2Y57 C5, 2Y59 C5, 2Y62 C5, 2Y64 C5, 2Y66 C4, 3A39 B5, 3A40 B5, 3A41 C5, 3A56 B5, 3A57 B5, 3A58 B5, 3A59 B5, 3A60 B5, 3A61 B5, 3A62 B5, 3A63 B5, 3A64 B5, 3A68 B5, 3A69 B5, 3A70 C4, 3A71 B4, 3A72 B4, 3A73 B5, 3A74 B5, 3A75 B4, 3A87 C5, 3C31 B3, 3C32 C3, 3C34 C3, 3C39 B3, 3C40 B3, 3C41 C3, 3C56 B3, 3C57 B3, 3C58 B3, 3C59 B3, 3C60 B3, 3C61 B3, 3C62 B3, 3C63 B3, 3C64 B3, 3C68 B3, 3C69 B2, 3C70 B2, 3C71 B2, 3C72 B2, 3C73 B3, 3C74 B3, 3C75 B3, 3C76 B2, 3C84 B2, 3C87 C3, 3D27 F3, 3D31 E3, 3E00 A5, 3E01 A6, 3E02 A6, 3E03 A6, 3E04 A6

3E05 A6, 3E06 A6, 3E07 A6, 3E08 A6, 3E09 A6, 3E13 A6, 3E20 A7, 3E21 A6, 3E22 A6, 3E23 A6, 3E42 A6, 3E45 A6, 3E46 A7, 3E49 A6, 3E50 A7, 3E53 A5, 3E56 A7, 3E57 A7, 3E58 A7, 3E59 A7, 3E60 A6, 3E62 A9, 3E63 A7, 3E64 A7, 3E65 A7, 3E66 A7, 3E67 A7, 3E68 B6, 3E69 A6, 3E70 A6, 3E71 A6, 3E72 A6, 3E73 A6, 3E74 A6, 3E75 A6, 3E79 A9, 3E86 A6, 3E87 A6, 3E88 A9, 3E89 A9, 3E90 A9, 3E91 A9, 3E92 B9, 3E95 A7, 3E96 A6, 3E97 B9, 3EA0 A6, 3EA1 A7, 3EA3 A7, 3EA4 A7, 3EA5 A7, 3EA6 A6, 3EA7 A6, 3EA8 A6, 3EA9 A6, 3F31 C7, 3F47 C7, 3F60 B7, 3F61 B7, 3F64 B7, 3F65 B7, 3F71 C7, 3F92 C7, 3G05 E6, 3G09 E6, 3G15 E4, 3G16 E5, 3G17 E5, 3G18 E4, 3G19 F5, 3G20 F5, 3G22 E4, 3G23 E4, 3G24 E4, 3G25 E5, 3G26 E5, 3G27 E4, 3G28 E4, 3G29 E4, 3G34 F5, 3G42 F4, 3G43 F5, 3G44 F5, 3G50 E4, 3G51 E4, 3G52 E4, 3G53 E6, 3G54 E5, 3G55 E5, 3G56 E5, 3G60 E5, 3G61 E4, 3G62 E4, 3G71 F5, 3G72 F5, 3G73 E4, 3G75 F5, 3G77 F5, 3G78 F5, 3H00 E7, 3H04 E6, 3H05 D6, 3H45 F8, 3H46 F8, 3H47 F8, 3H70 D7, 3H75 F7, 3H82 F7, 3H84 D8, 3H86 D8, 3H88 D8, 3H95 D6, 3H97 D6, 3I58 A8, 3J00 C4, 3J01 C3, 3J02 C4, 3J03 C3, 3J04 C4, 3J05 C3, 3J06 C3, 3J07 C4, 3J08 C3, 3J09 C4

3J10 C3, 3J11 C4, 3J18 C4, 3J19 C4, 3J20 C4, 3J21 C3, 3J23 C3, 3J24 C3, 3J26 B4, 3J27 C4, 3J28 C4, 3J29 C3, 3J33 D3, 3J48 C4, 3J49 C3, 3J74 D3, 3J85 C3, 3J86 C3, 3J87 D3, 3J88 D3, 3J89 D3, 3K00 B3, 3K01 B3, 3K02 C3, 3K06 B3, 3K09 B3, 3K13 B3, 3K14 B3, 3K15 B3, 3K16 B3, 3L33 C6, 3M03 D9, 3M06 E9, 3M07 D9, 3M08 D9, 3M09 E9, 3M10 D9, 3M12 D9, 3M13 D9, 3M18 D9, 3M19 D9, 3M20 C9, 3M21 C9, 3M23 C9, 3M24 E9, 3M40 E9, 3M41 E9, 3M46 E9, 3N00 B7, 3N04 B7, 3N07 B7, 3N08 B7, 3N09 B7, 3N34 B7, 3N35 B7, 3N36 B7, 3N37 B7, 3N38 B7, 3N39 B7, 3N40 C7, 3N41 C7, 3N47 B7, 3N51 C7, 3N55 B7, 3N56 C7, 3N57 C7, 3N58 C7, 3N59 C7, 3N60 C7, 3N61 C7, 3N62 C7, 3N64 C7, 3N65 C7, 3N66 C7, 3N67 C7, 3N68 C7, 3N69 C7, 3N71 C7, 3N72 C7, 3N73 C6, 3N74 C6, 3N75 C6, 3N76 C6, 3N77 C6, 3N78 C6, 3N79 C6, 3N80 C6, 3O00 A4, 3O01 A4, 3O02 A4, 3O03 A5, 3O04 A4, 3O05 A4, 3O06 A4, 3O07 A4, 3O08 A4, 3O09 A4, 3O10 A4, 3O21 A4, 3O22 A4, 3O23 A4, 3O24 A4, 3O25 A4, 3O26 A4, 3O27 A4, 3O28 A4, 3Q16 E6, 3Q20 E6, 3Q21 E6, 3Q23 E6, 3Q31 F7, 3Q32 F7, 3Q70 F7, 3R00 E8, 3R01 E8, 3R02 E8, 3R03 E8, 3R04 E8, 3R05 E8, 3R06 E8, 3R07 E8, 3R08 E8, 3R09 E8, 3R10 E8

3R11 E8, 3R12 E8, 3R13 E8, 3R14 E8, 3R15 E8, 3R16 E8, 3R17 E8, 3R19 E8, 3R21 E8, 3R23 E8, 3R24 E8, 3R38 E8, 3R40 F8, 3R41 F8, 3R42 F8, 3R43 F8, 3R44 F8, 3R45 F8, 3R46 F8, 3R47 E8, 3U54 C9, 3U55 D9, 3U56 D9, 3V00 E6, 3V01 E7, 3V02 E6, 3V03 E7, 3V04 E6, 3V05 E7, 3V06 E6, 3V07 E7, 3V08 E6, 3V09 E7, 3V10 E6, 3V11 E7, 3V12 E6, 3V13 E7, 3V14 E6, 3V15 E7, 3V16 E6, 3V17 E7, 3V18 E6, 3V19 E7, 3V20 E6, 3V21 E7, 3V22 E6, 3V23 E7, 3V32 E6, 3V33 E7, 3V34 E6, 3V35 E7, 3V36 E6, 3V37 E7, 3V38 E6, 3V39 E7, 3V40 E6, 3V41 E7, 3V42 E6, 3V43 E7, 3Y00 B5, 3Y01 B5, 3Y02 C5, 3Y06 B5, 3Y09 B5, 3Y13 B5, 3Y14 B5, 3Y15 B5, 3Y16 B5, 3Y18 C5, 3Y19 C5, 3Y21 C5, 3Y22 C5, 3Y23 C6, 3Y24 C6, 5A01 B5, 5A02 C5, 5A03 C5, 5A32 B6, 5A33 B5, 5A36 B5, 5A53 C5, 5A56 C5, 5A57 B5, 5C01 B3, 5C02 B2, 5C31 D2, 5C32 B4, 5C33 B3, 5C52 B3, 5C53 B2, 5C54 B2, 5C57 B3, 5D11 F3, 5D12 F3, 5D13 F3, 5D14 E3, 5E04 B9, 5E05 A9, 5E06 B9, 5E07 A9, 5E09 A6, 5E11 A7, 5E13 A6, 5E15 A7, 5G00 E5, 5G01 E5, 5G50 F5, 5G51 E5, 5G52 F5, 5H01 E6, 5H03 E6, 5H04 E6, 5J54 D3, 5K00 B3, 5K01 B4, 5K06 B3, 5M00 F9, 5M01 F9, 5M02 F9, 5M03 F9, 5M04 F8, 5M05 F8, 5M06 F8, 5M07 F8

5M08 F8, 5M20 D9, 5M21 E9, 5M25 F9, 5M26 F9, 5N01 C7, 5N02 C7, 5N10 C7, 5O00 A4, 5O01 A4, 5U01 C8, 5U02 C8, 5U03 D8, 5U05 C8, 5U06 D8, 5U08 C8, 5U09 D8, 5U10 C8, 5U11 C8, 5U12 D8, 5U13 D8, 5U14 D8, 5U15 C8, 5U16 C8, 5U17 C8, 5U18 C8, 5U19 C8, 5U20 C8, 5U21 C8, 5Y00 B5, 5Y01 B6, 5Y04 C6, 5Y05 B5, 5Y06 B5, 6A51 B5, 6C51 B3, 6D00 E4, 6D04 F2, 6E08 A9, 6E09 A6, 6E10 A6, 6E11 A6, 6E12 A6, 6E13 A6, 6E24 A5, 6E26 A5, 6E27 A5, 6E28 A5, 6E29 A5, 6E30 A5, 6E31 A5, 6E32 A5, 6E33 A5, 6E36 A5, 6E37 A5, 6E38 A5, 6E39 A6, 6E41 A6, 6E43 A6, 6E44 A7, 6E45 A6, 6F04 B7, 6F05 B7, 6F06 B7, 6G01 F5, 6G07 E5, 6G08 E5, 6G11 E5, 6H01 D6, 6H03 D6, 6H04 F7, 6H06 E6, 6I00 A8, 6I01 A8, 6I02 A8, 6I03 A8, 6I04 A8, 6I05 A8, 6I08 A9, 6I09 A9, 6I10 A9, 6I11 A9, 6I12 A8, 6I24 A8, 6I32 A7, 6I33 A8, 6I34 A7, 6I35 A8, 6I36 A7, 6I38 A7, 6M01 E9, 6N01 C6, 6N02 C7, 6N03 C6, 6N06 C7, 6O00 A4, 6O01 A4, 6O02 A4, 6U08 C8, 6U09 D8, 6U10 C8, 7A53 B5, 7A54 B5, 7A56 B4, 7C31 B3, 7C32 B4, 7C53 B3, 7C54 B3, 7C56 C2, 7D05 E3, 7D07 E4, 7E01 A6, 7E03 A7, 7E05 A7, 7E06 A6, 7E08 A6, 7E10 A7, 7E30 A6, 7E31 A6, 7E32 A6, 7E33 A7, 7F01 C7, 7F06 B7, 7F08 B7

7F09 B7, 7F15 B7, 7F16 C7, 7G00 E6, 7G01 E5, 7G02 E5, 7G03 E5, 7G06 F5, 7G07 F5, 7G08 F5, 7G09 E5, 7G20 F4, 7J00 C4, 7J02 C3, 7J50 D3, 7J51 C3, 7J54 D3, 7M01 E9, 7N01 C7, 7N50 B7, 7N51 C7, 7N52 B7, 7N53 B7, 7N54 C7, 7N55 C6, 7N56 C6, 7Q01 E6, 7R02 F8, 7U01 C9, 7U02 C9, 7U03 D9, 7V00 D6, 7V03 E6, 9C00 B3, 9C01 C3, 9C55 B2, 9D62 E4, 9D63 E4, 9D67 E4, 9D68 E4, 9D69 E4, 9D70 E4, 9D71 E4, 9D72 E4, 9D73 E4, 9D74 E4, 9D75 E4, 9E00 A9, 9E01 B9, 9E02 A9, 9E03 A9, 9E04 A9, 9E05 B9, 9E10 B9, 9E11 B9, 9E13 B9, 9E14 A8, 9E15 A8, 9E16 B8, 9E17 B8, 9E18 A9, 9E19 A9, 9E20 A9, 9E21 A9, 9E22 B9, 9E23 B8, 9E24 A9, 9E25 A9, 9E26 B8, 9E27 A9, 9E28 A9, 9E29 A9, 9E30 A9, 9E31 A9, 9E32 A9, 9E33 A9, 9E35 A6, 9E36 A5, 9E37 A6, 9E38 A6, 9E40 A7, 9E42 A6, 9E43 B9, 9E44 B9, 9E47 B9, 9E48 B9, 9E49 B9, 9E50 B9, 9E51 B9, 9E52 B9, 9E53 B9, 9E54 B9, 9E55 A9, 9E56 A9, 9E57 A9, 9E58 A9, 9E59 A9, 9E60 A9, 9E61 A9, 9E62 A9, 9E63 A9, 9E64 A9, 9E65 A9, 9E66 A9, 9E67 A9, 9E68 A9, 9E69 A9, 9E70 A9, 9E71 A9, 9E72 A9, 9E73 A9, 9E74 A9, 9E75 A9, 9E76 A9, 9E77 A9, 9E78 A9, 9E79 A9, 9E80 A9, 9E81 A9, 9E82 A9, 9E83 A9, 9E84 A9, 9E86 A9, 9E87 A9

Layout Small Signal Board (Part 1 Top Side)

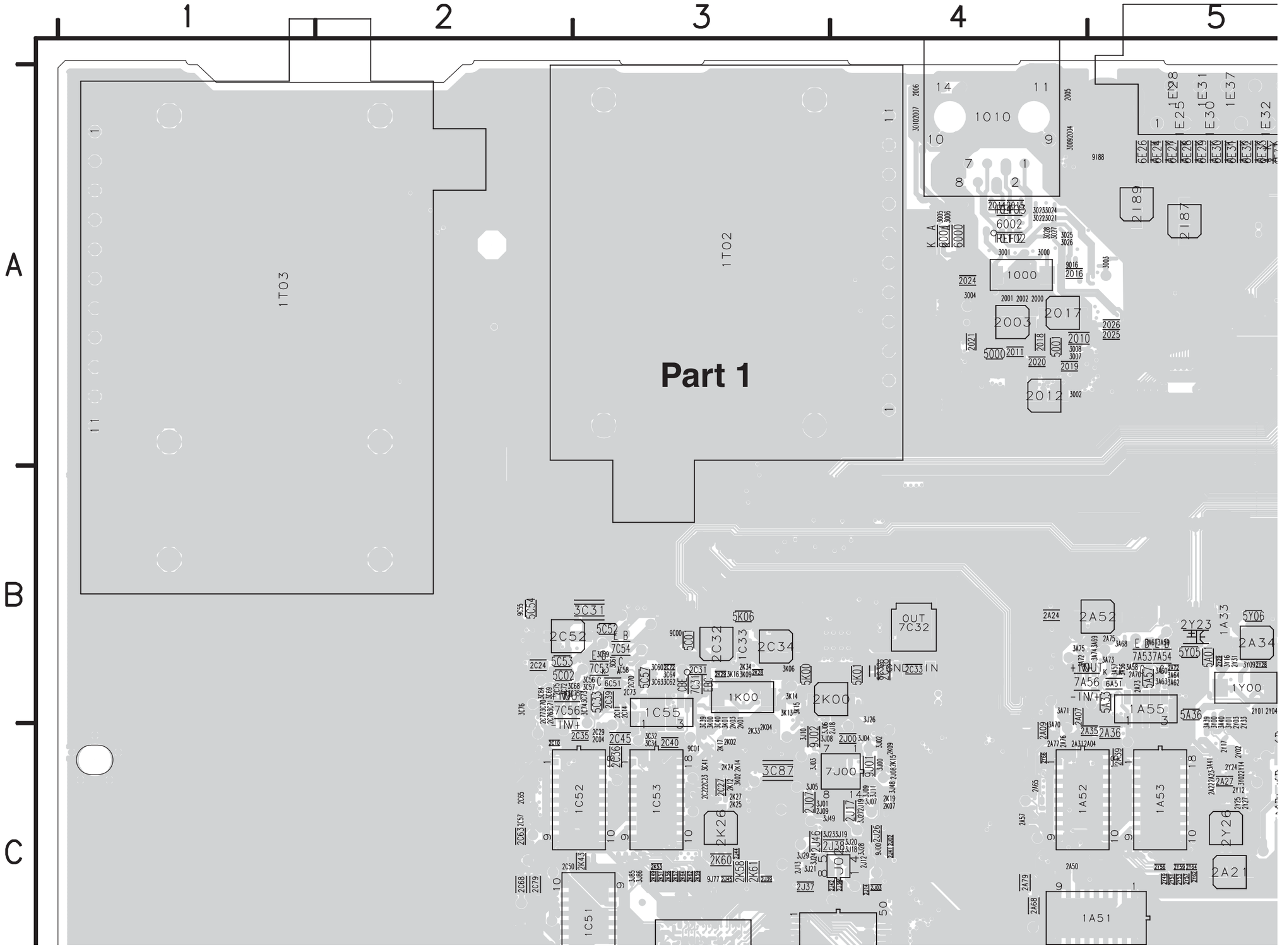

E_14700_042a.eps
100404

Layout Small Signal Board (Part 2 Top Side)

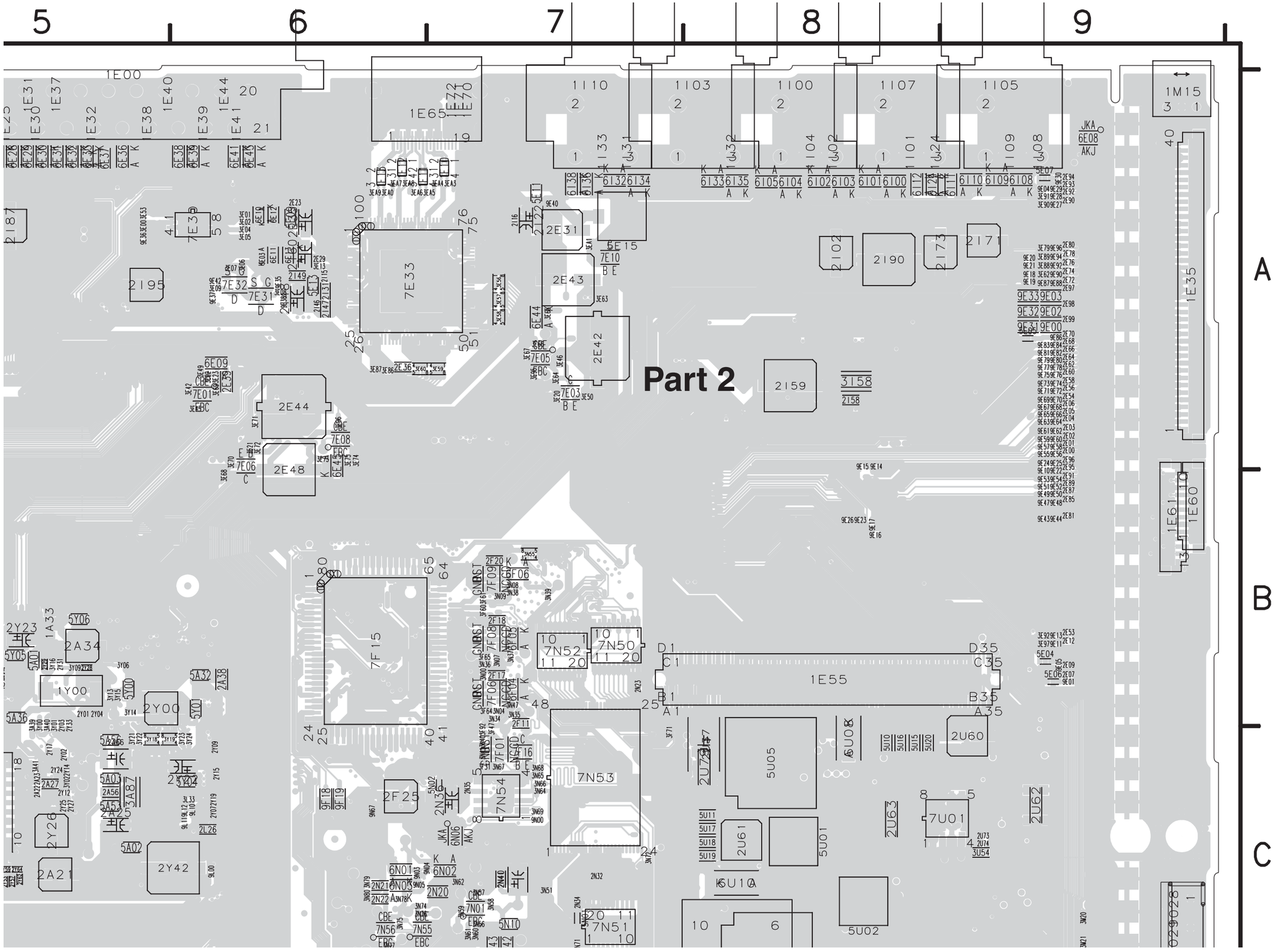

E_14700_042b.eps
041004

Layout Small Signal Board (Part 3 Top Side)

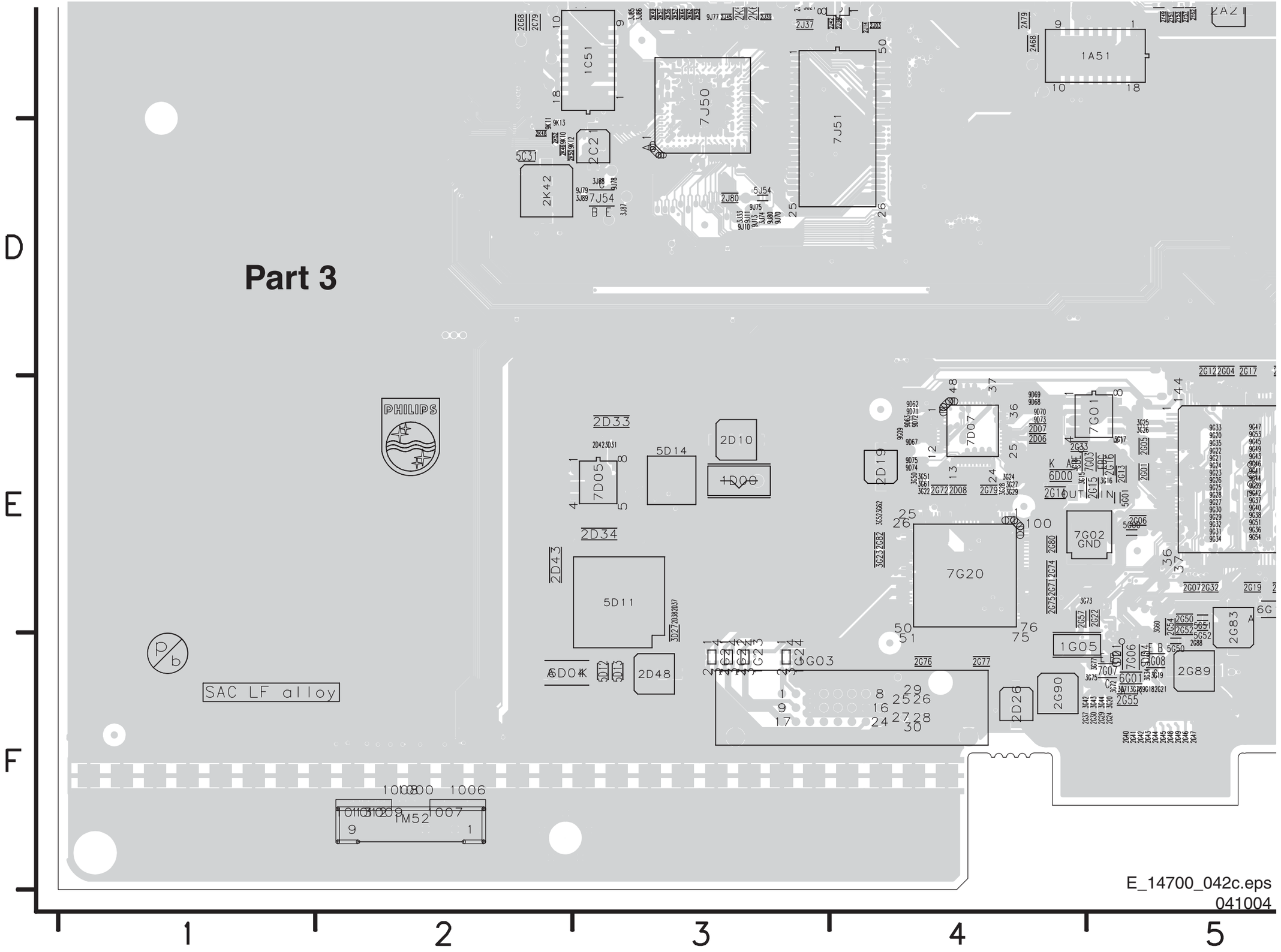

E_14700_042c.eps
041004

Layout Small Signal Board (Part 4 Top Side)

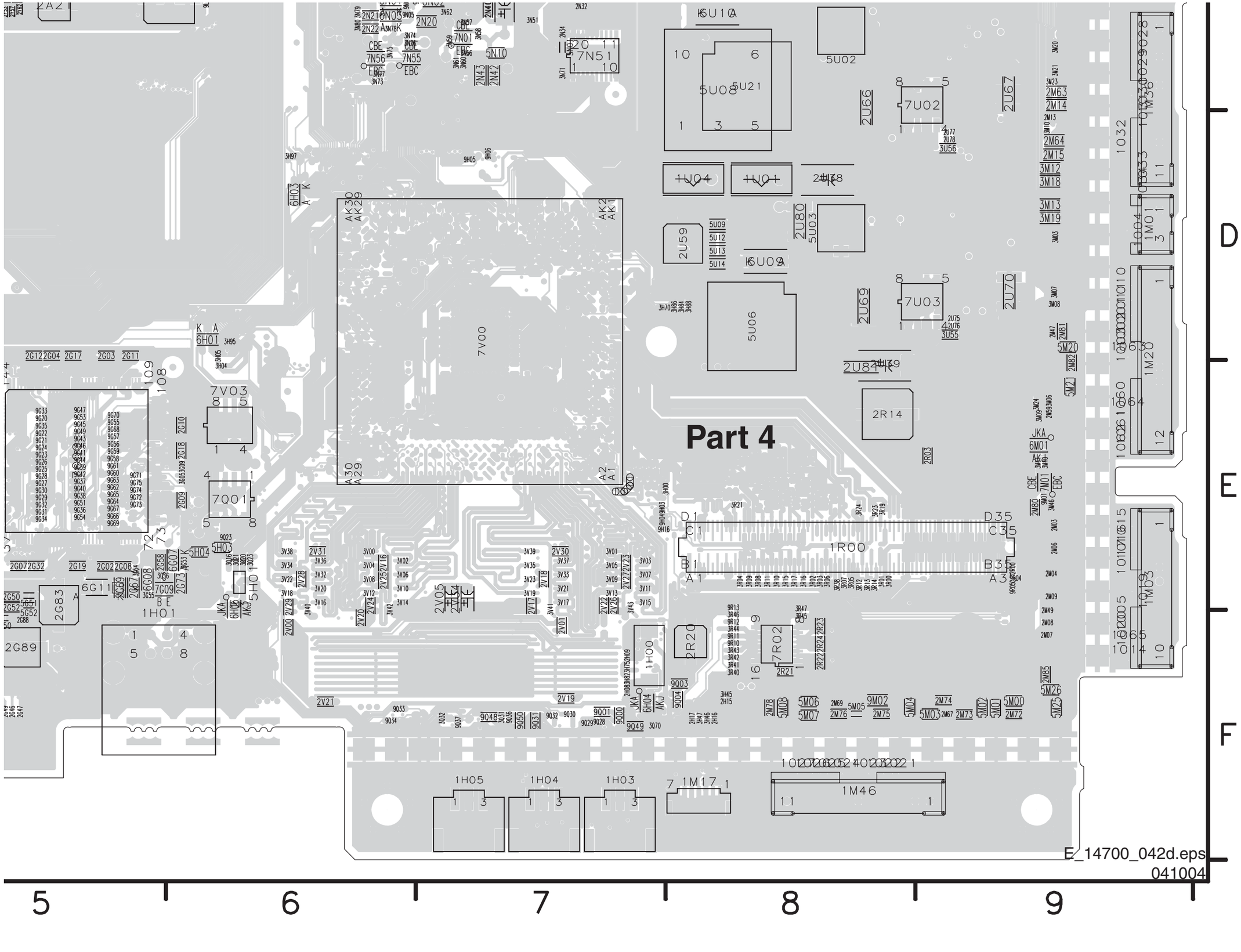

Layout Small Signal Board (Overview Bottom Side)

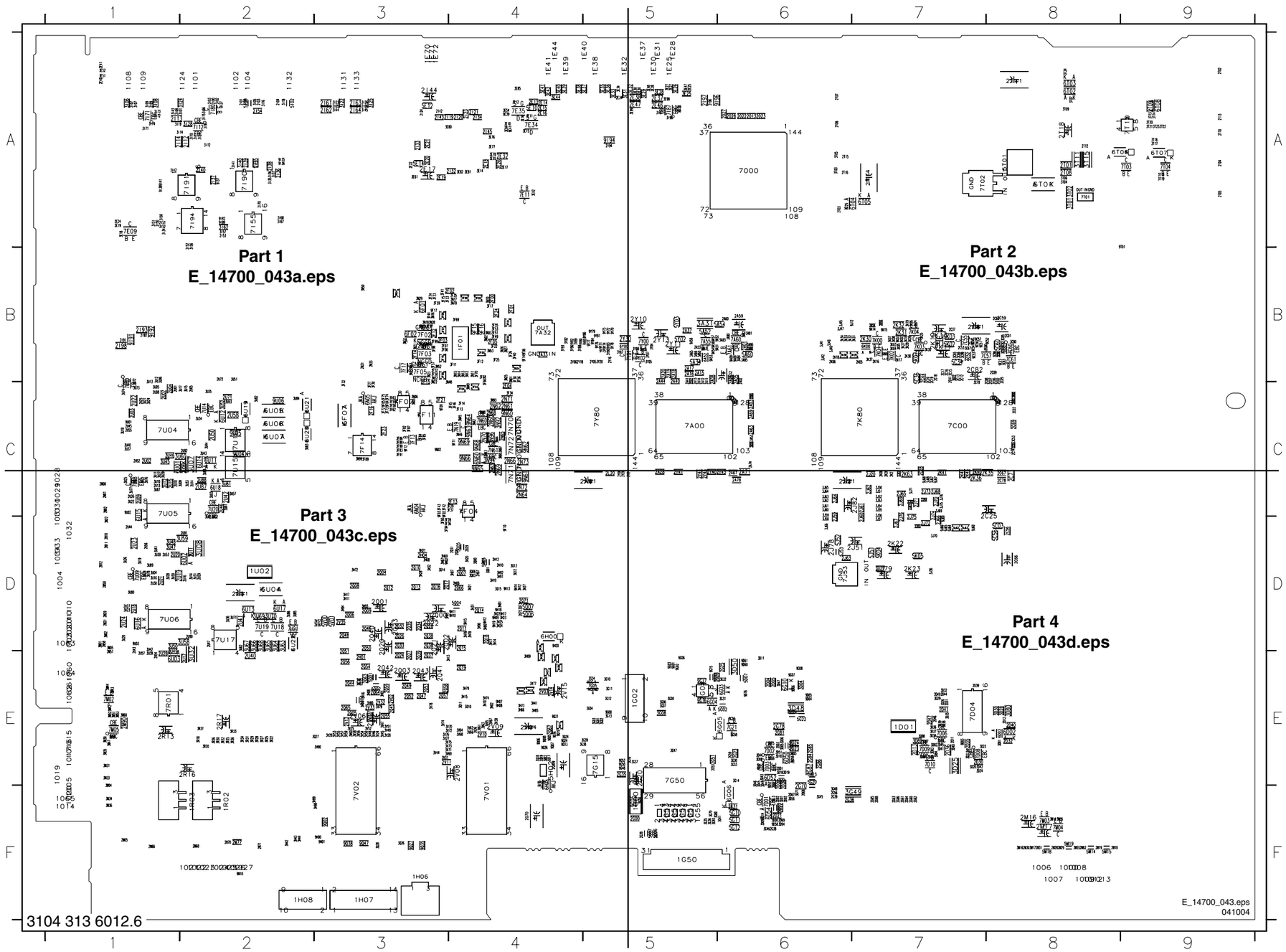

1D01 E7 1R02 F2 2A15 B5 2A53 B5 2C02 B8 2C19 B7 2C66 D8 2D05 E6 2D35 E7 2E13 A4 2E27 A5 2F02 B4 2F24 B4 2G39 F6 2G70 F6 2H12 D4 2I19 A4 2I40 A2 2I64 A3 2J52 C7 2J69 C7 2K05 B7 2K31 B7 2K65 C8 2M20 D1 2M70 F2 2N68 C4 2Q02 D3 2Q15 D4 2Q28 D3 2Q42 E3 2Q55 E3 2Q72 D4 2T09 A9 2U05 C2 2U18 D1
1F01 B4 1R03 F2 2A16 B5 2A55 C6 2C03 C8 2C20 B7 2C67 C8 2D11 E7 2D36 E7 2E14 A4 2E28 A5 2F03 B3 2G00 F5 2G51 E5 2G78 E6 2I00 A2 2I20 A4 2I42 A3 2I70 A2 2J53 D7 2J70 C7 2K06 B6 2K32 B7 2K66 C8 2M21 D1 2M71 F2 2N69 C4 2Q03 E3 2Q16 D3 2Q29 D4 2Q43 E3 2Q56 E3 2Q73 D4 2T10 A9 2U06 C2 2U19 D1
1G00 F5 1U02 D2 2A17 B5 2A59 B6 2C05 B8 2C25 C8 2C69 C8 2D12 E8 2D39 E7 2E15 A4 2E30 A5 2F04 C4 2G20 E5 2G53 E5 2G81 E6 2I01 A2 2I21 A4 2I43 A3 2I91 B1 2J54 C7 2J71 C7 2K08 C7 2K35 C8 2L20 C5 2M28 F8 2M77 F2 2N70 C4 2Q04 D3 2Q17 D3 2Q30 D3 2Q44 E3 2Q57 E3 2R13 E1 2T11 A8 2U07 C1 2U20 D1
1G02 E5 2A01 B6 2A18 B5 2A60 B6 2C06 B8 2C28 C9 2C71 C8 2D13 E7 2D40 E8 2E16 A4 2E32 A4 2F05 B4 2G23 E6 2G56 F6 2G84 E6 2I03 A2 2I23 A4 2I44 A3 2I93 B1 2J59 D6 2J72 D7 2K10 B7 2K36 C7 2M00 C1 2M29 F8 2M90 E1 2N71 C4 2Q05 E3 2Q18 D4 2Q31 D4 2Q45 E3 2Q58 E3 2R16 E2 2T12 A8 2U08 C1 2U21 D1
1G50 F5 2A02 B6 2A19 B5 2A63 C6 2C07 B8 2C30 B7 2C74 C8 2D20 E6 2D41 E7 2E17 A3 2E34 A5 2F06 B3 2G25 E6 2G59 E6 2G85 E6 2I04 A2 2I24 A3 2I45 A4 2I93 B1 2J60 D7 2J73 C7 2K11 B7 2K38 B7 2M01 C1 2M30 F8 2N31 B3 2N72 C4 2Q06 D3 2Q19 E4 2Q32 D3 2Q46 D3 2Q59 E3 2R17 E2 2T13 A9 2U09 C1 2U22 C1
1G51 F5 2A03 C6 2A20 B5 2A67 C6 2C08 B8 2C37 B7 2C78 C8 2D21 F6 2D44 E7 2E18 A4 2E37 A5 2F07 B3 2G26 E5 2G60 F7 2G86 E6 2I05 A3 2I32 A4 2I50 A1 2I94 A5 2J61 C7 2J74 C7 2K13 B7 2K40 C7 2M02 C1 2M31 F8 2N33 B3 2N73 C4 2Q07 D4 2Q20 E3 2Q33 D3 2Q47 E3 2Q63 E3 2T01 A8 2T14 A7 2U10 C1 2U23 D1
1G52 F5 2A05 B6 2A28 C5 2A69 C6 2C09 B8 2C41 B7 2C80 B8 2D22 F6 2D45 E7 2E19 A3 2E38 A5 2F12 B3 2G27 F5 2G61 F7 2G87 E6 2I06 A3 2I33 A3 2I51 A1 2I96 A5 2J62 C7 2J75 D7 2K16 B7 2K41 C7 2M10 D1 2M50 D1 2N60 C4 2O13 A6 2Q08 D3 2Q21 D3 2Q34 D3 2Q48 D3 2Q64 E3 2T02 A9 2T15 A6 2U11 D2 2U24 D1
1G53 F5 2A06 B6 2A32 B6 2A71 C6 2C12 B7 2C44 B7 2C81 B7 2D23 E6 2D46 E7 2E20 A3 2E40 A1 2F13 C4 2G28 F5 2G62 F7 2H01 E3 2I07 A1 2I34 A4 2I52 A2 2I97 A5 2J63 D6 2J76 D7 2K18 B6 2K44 C7 2M11 D1 2M51 E1 2N61 C4 2O22 A6 2Q09 D3 2Q22 D3 2Q35 D3 2Q49 E3 2Q65 E3 2T03 A6 2T16 A6 2U12 C1 2U25 C1
1G54 F5 2A08 B5 2A33 B4 2A74 C6 2C13 B7 2C53 B7 2C82 B7 2D24 E6 2D47 E7 2E21 A3 2E41 A1 2F14 B3 2G31 F6 2G63 F7 2H04 D3 2I08 A1 2I35 A2 2I53 A2 2I98 B1 2J64 C6 2J77 D7 2K20 C7 2K45 C7 2M12 D1 2M58 D1 2N62 C4 2O23 A6 2Q10 D3 2Q23 D3 2Q37 E3 2Q50 D3 2Q66 D4 2T04 A9 2T18 A8 2U13 C1 2U26 C1
1G55 F5 2A11 B5 2A37 B5 2A78 C6 2C15 B7 2C55 C8 2D01 E6 2D25 E6 2D49 E7 2E22 A3 2E46 A5 2F15 B3 2G34 E5 2G64 F7 2H06 D4 2I09 A1 2I36 A2 2I54 A2 2J20 C7 2J65 C7 2J78 D6 2K21 C7 2K47 B7 2M16 F8 2M62 F8 2N63 C4 2O27 A6 2Q11 D4 2Q24 E3 2Q38 D3 2Q51 E3 2Q67 E4 2T05 A9 2U01 C1 2U14 C2 2U27 D1
1H06 F3 2A12 B5 2A40 B5 2A80 B6 2C16 B7 2D02 F6 2D30 E7 2D67 F6 2E24 A1 2E47 A5 2F16 C3 2G35 E5 2G65 F7 2H07 D4 2I12 A2 2I37 A2 2I61 A3 2J21 C6 2J66 D7 2J79 D7 2K22 D7 2K54 B7 2M17 F8 2M65 F1 2N64 C4 2O28 A6 2Q12 D3 2Q25 D4 2Q39 E3 2Q52 E3 2Q69 E4 2T06 A6 2U02 C1 2U15 C1 2U28 E1
1H07 F3 2A13 B5 2A41 B5 2A81 C5 2C17 B7 2C59 B8 2D03 E6 2D31 E7 2D68 F6 2E25 A5 2F00 B4 2F21 C3 2G36 F6 2G66 F7 2H10 D4 2I13 A1 2I38 A2 2I62 A3 2J43 C7 2J67 D7 2J81 C7 2K23 D7 2K55 B7 2M18 F8 2M66 F1 2N65 C4 2Q00 D3 2Q13 D3 2Q26 D3 2Q40 D3 2Q53 E3 2Q70 F4 2T07 A6 2U03 C1 2U16 D2 2U29 D2
1H08 F3 2A14 B5 2A44 B5 2C01 B8 2C18 B7 2C60 B8 2D04 E6 2D32 E8 2D69 F6 2E26 A4 2F01 B4 2F23 C3 2G38 F6 2G68 F7 2H11 D4 2I14 A1 2I39 A2 2I63 A3 2J51 D7 2J68 C7 2J82 C7 2K30 B7 2K63 C7 2M19 F8 2M68 F2 2N66 C4 2Q01 D3 2Q14 D4 2Q27 E3 2Q41 E3 2Q54 E3 2Q71 D4 2T08 A8 2U04 C1 2U17 E2 2U30 D1

2U40 E2 3D41 E7 3F68 B4 3I06 A1 3M55 F8 3U17 C2 3Y89 B4 7D06 E7 9G08 E6
2U41 D2 3D42 E7 3F69 B4 3I07 A1 3M60 E1 3U18 C1 3Y90 B5 7D08 E7 9G15 E5
2U42 C2 3D43 E6 3F70 B4 3I08 A1 3N01 B4 3U19 D1 3Y93 B4 7D09 E7 9G16 E5
2U43 D1 3D44 E6 3F72 C3 3I09 A1 3N02 B4 3U20 D1 3Y96 B4 7D10 E7 9G17 E5
2U44 D1 3D45 E6 3F73 C3 3I10 A2 3N03 B4 3U21 C1 5A34 B5 7E09 A1 9G48 E5
2U45 C1 3D46 E6 3F74 C3 3I11 A2 3N05 C3 3U22 C1 5A52 B5 7E11 A4 9G50 E5
2U46 C2 3D47 E6 3F75 C3 3I12 A2 3N06 C3 3U23 D1 5A54 B6 7E34 A4 9G52 E5
2U47 D2 3D48 E6 3F82 C3 3I13 A2 3N10 B4 3U24 C1 5A60 B6 7E35 A4 9H00 F3
2U48 E6 3D49 E6 3F83 C3 3I14 A2 3N11 B4 3U25 C1 5C03 D8 7F02 B3 9H01 F3
2U49 E6 3D50 E6 3F84 C3 3I15 A2 3N12 B4 3U26 D1 5C34 B7 7F03 B3 9H02 D3
2U50 C2 3D51 E6 3F85 C3 3I16 A2 3N13 B4 3U27 C1 5C36 B7 7F04 C4 9H07 E4
2U51 D2 3D56 F6 3F86 C3 3I18 A2 3N14 B4 3U28 D1 5C56 D8 7F05 B3 9H08 E4
2U52 C1 3D61 E6 3F87 C3 3I19 A1 3N15 B4 3U29 C1 5C60 B8 7F07 C3 9H09 D4
2U53 D1 3D80 E8 3F88 C3 3I22 A3 3N16 B3 3U30 D1 5D03 F6 7F11 C3 9H10 D4
2U54 E1 3D71 F6 3F87 C3 3I19 A1 3N15 B4 3U29 C1 5C60 B8 7F07 C3 9H09 D4
2U55 C1 3D80 E8 3F88 C3 3I22 A3 3N16 B3 3U30 D1 5D03 F6 7F11 C3 9H10 D4
2U56 D1 3D81 E8 3F89 C3 3I23 A3 3N17 B4 3U31 D2 5D04 E6 7F13 C3 9H11 D4
2U57 E1 3D82 E7 3F90 C3 3I24 A2 3N18 B3 3U32 E2 5D05 E6 7F14 C3 9H12 D4
2U58 C2 3D83 E7 3F91 C3 3I25 A3 3N19 B3 3U33 C2 5D06 E6 7F17 B3 9H13 D4
2U71 C2 3D84 E7 3F93 D3 3I26 A3 3N20 B3 3U34 C2 5D07 E6 7G04 E6 9H14 D4
2U72 B2 3D85 E7 3F94 D3 3I27 A2 3N21 B3 3U35 C2 5E10 A4 7G05 E5 9H15 D4
2U87 C2 3D86 E7 3F97 B3 3I28 A2 3N22 C3 3U36 D2 5E12 A3 7G15 E4 9H17 D4
2U88 C2 3D87 E7 3F98 B3 3I34 A1 3N23 B3 3U37 C1 5E14 A3 7G21 E6 9H18 D4
2U90 D2 3D88 E7 3F99 B3 3I35 A2 3N24 B4 3U38 D1 5G02 E6 7G50 F5 9H19 D4
2U91 D2 3D89 E7 3G00 E5 3I36 A2 3N25 B4 3U39 E1 5G03 E5 7I12 A2 9H20 D4
2U92 C2 3D94 F6 3G01 E5 3I37 A2 3N26 B4 3U40 C1 5G05 E5 7I55 A2 9H21 D3
2V02 E3 3E10 A4 3G02 E5 3I40 A2 3N27 B4 3U41 D1 5G06 F5 7I71 A1 9I35 A2
2V03 E4 3E11 A4 3G03 E5 3I41 A2 3N28 B3 3U42 D1 5G07 F5 7I80 A2 9I36 A2
2V04 E4 3E12 A4 3G04 E5 3I42 A1 3N29 B3 3U43 C2 5G10 F6 7I87 A5 9I37 A2
2V06 E3 3E14 A4 3G06 E5 3I43 A1 3N30 B3 3U44 C2 5G11 F6 7I90 A2 9I38 A1
2V07 E3 3E15 A4 3G07 E5 3I44 A3 3N31 B3 3U45 C1 5G12 F6 7I91 A2 9I41 A1
2V08 E4 3E16 A4 3G08 E5 3I45 A3 3N32 B3 3U46 C1 5G20 E6 7I94 A2 9I42 A2
2V09 E4 3E17 A4 3G10 E5 3I50 A1 3N33 B3 3U47 D1 5G22 E6 7J53 D6 9I89 A2
2V10 E4 3E18 A1 3G11 E5 3I51 A1 3N42 C4 3U48 D1 5G23 E6 7K00 B7 9I91 B1
2V11 E3 3E19 A1 3G12 E5 3I52 A1 3N43 C4 3U49 E1 5H02 E4 7K01 B7 9I92 B1
2V12 E3 3E25 A5 3G13 E5 3I56 A2 3N44 C4 3U50 D1 5H05 D4 7K02 B7 9I94 A5
2V13 E3 3E26 A5 3G14 E6 3I57 A2 3N45 C4 3U51 B2 5I00 A2 7K03 B7 9I96 A5
2V14 E4 3E27 A5 3G21 E6 3I62 A2 3N46 C4 3U52 C2 5I02 A2 7K04 B7 9J12 B6
2V15 E4 3E28 A5 3G30 E6 3I66 A2 3N48 C4 3U53 C2 5J51 D7 7K80 C6 9J60 D7
2V32 E3 3E29 A5 3G31 E6 3I67 A2 3N49 C4 3U57 C2 5J52 D6 7M02 E1 9J62 D7
2V33 E3 3E30 A5 3G32 E6 3I68 A2 3N50 B3 3U58 D2 5J53 D6 7M03 F8 9J63 D7
2V35 D3 3E31 A5 3G33 E6 3I71 A1 3N52 B3 3U59 D2 5K02 B7 7M04 F8 9J64 D7
2V36 D3 3E32 A5 3G35 F5 3I72 A1 3N53 B4 3U60 C2 5K03 B7 7M05 E1 9J65 D7
2V37 D3 3E33 A5 3G36 F5 3I73 A1 3N54 B3 3U61 C2 5K04 D7 7N19 C3 9J66 D7
2V05 B5 3E34 A5 3G37 E5 3I74 A1 3N63 B3 3U62 D2 5K05 D7 7N60 C4 9J67 C7
2V06 B4 3E35 A5 3G38 E5 3I87 A5 3N70 B4 3U63 D2 5K07 B7 7N61 C4 9J68 C7
2V08 C5 3E36 A5 3G39 E5 3I88 A5 3N90 C4 3U64 D2 5M14 F8 7N70 C4 9J69 D7
2V10 B5 3E37 A5 3G40 F5 3I89 A5 3N92 C4 3U65 D2 5M15 F8 7N71 C4 9K02 B7
2V11 B5 3E38 A4 3G41 F6 3I90 A5 3N93 C4 3U66 D2 5M18 F8 7N72 C4 9K03 B7
2V13 B5 3E39 A4 3G45 F6 3I91 A2 3N94 C4 3U67 D2 5M19 F8 7O00 A6 9K14 B7
2V16 B5 3E40 A4 3G46 F6 3J36 D7 3N95 C4 3U68 D2 5Q01 E3 7R01 E1 9K15 B7
2V18 B4 3E41 A4 3G47 E5 3J40 B6 3N96 C4 3U69 D2 5Q02 E3 7T01 A8 9M10 F2
2V20 C5 3E43 A4 3G48 F6 3J41 B6 3N97 C4 3U70 D2 5Q03 E3 7T02 A7 9N02 C3
2V21 C5 3E44 A4 3G49 E7 3J42 B6 3N99 C3 3U71 D2 5Q04 D4 7T03 A9 9N60 C4
2V30 B5 3E47 A5 3G58 E6 3J45 B6 3O00 D4 3U72 B1 5Q05 D4 7T04 A9 9N61 C4
2V40 C5 3E48 A5 3G76 E5 3J46 B6 3O01 D4 3U73 C1 5Q06 D4 7T10 A9 9N62 C4
2V41 C5 3E51 A1 3G79 F5 3J47 B6 3O03 D4 3U74 C1 5Q07 D4 7U04 C1 9N63 C4
2V43 C6 3E52 A1 3G80 F5 3J50 C7 3Q06 D4 3U75 C1 5T01 A8 7U05 C1 9N64 C4
2V44 C5 3E54 A4 3H01 E3 3J51 C7 3Q10 E4 3U76 C1 5U08 C2 7U06 D1 9N65 C4
2V45 C5 3E55 A4 3H02 E4 3J52 C7 3Q11 E4 3U77 C1 5V00 D3 7U08 C1 9N66 C4
2V47 B5 3E61 A3 3H03 E3 3J53 C7 3Q12 D4 3U78 D1 5V01 D3 7U09 D1 9N68 C4
2Y65 C6 3E76 A4 3H07 D4 3J54 C7 3Q13 D4 3U79 D1 5Y02 B5 7U10 B1 9N69 C4
3A31 B5 3E77 A4 3H08 E3 3J55 C7 3Q14 D3 3U80 D1 5Y03 B5 7U14 C2 9Q02 F3
3A50 B5 3E78 A4 3H09 E4 3J56 C7 3Q15 D4 3U81 C2 6A52 B5 7U15 C2 9Q05 E4
3A53 C6 3E80 A3 3H10 E4 3J57 D7 3Q17 E4 3U82 C2 6C52 B7 7U16 C2 9Q06 E4
3A65 B5 3E81 A4 3H11 D3 3J58 D6 3Q18 E4 3U83 C2 6D02 E8 7U17 E2 9Q07 E4
3A66 B5 3E82 A4 3H12 D4 3J59 C6 3Q19 E4 3U84 C2 6D03 E8 7U18 D2 9Q08 E4
3A67 B5 3E84 A4 3H13 E3 3J60 C6 3Q22 E4 3U85 D2 6D50 E6 7U19 D2 9Q13 E4
3A80 B6 3E85 A4 3H14 D4 3J61 C6 3Q24 E4 3U86 D2 6D52 E6 7U20 C2 9Q14 E4
3A81 B6 3E98 A5 3H15 E4 3J62 C6 3Q26 F3 3U87 C1 6D54 F6 7U21 D2 9Q16 E4
3A82 B6 3E99 A5 3H16 E3 3J63 C6 3Q27 E3 3U88 C2 6F01 B3 7V01 F4 9Q19 E4
3A83 B6 3EA2 A4 3H17 D3 3J64 C6 3Q28 F3 3U89 D1 6F02 B3 7V02 F3 9Q21 E4
3A84 B6 3F00 B4 3H18 D4 3J65 C6 3R18 E2 3V24 E3 6F07 C3 7Y00 B5 9Q24 E4
3A85 B6 3F01 B4 3H19 D4 3J66 D6 3R20 E2 3V25 E3 6G03 E6 7Y01 B5 9Q26 E4
3A86 B6 3F02 B4 3H20 D4 3J67 C7 3R22 E2 3V26 E4 6G04 E5 7Y02 B5 9Q27 F3
3C50 B7 3F03 C4 3H21 D4 3J68 C7 3R25 E2 3V27 E3 6G05 E6 7Y80 C4 9Q35 F3
3C53 C8 3F04 C4 3H22 D4 3J69 C7 3R26 E2 3V28 E3 6G06 F6 9A00 B6 9Q38 F3
3C65 B7 3F05 B4 3H23 D4 3J70 D7 3R27 E2 3V29 E3 6G10 E6 9A09 B6 9Q47 F3
3C66 B7 3F06 B4 3H24 D4 3J71 C7 3R28 E2 3V30 E4 6H00 D4 9A51 B5 9T01 A9
3C67 B7 3F07 B3 3H25 D4 3J75 C7 3R29 E2 3V31 E3 6H05 E4 9A52 B5 9U01 C1
3C78 C7 3F08 B3 3H27 D4 3J76 C7 3R30 E2 3V44 E3 6K00 B7 9A53 B5 9U02 C1
3C80 B8 3F09 B3 3H28 D3 3K03 B7 3R31 E2 3V45 E3 6N04 C3 9A54 B5 9U03 D1
3C81 B8 3F10 B3 3H31 D4 3K04 B7 3R32 E2 3V46 E3 6N05 C3 9A56 B5 9U04 C2
3C82 B8 3F11 B4 3H32 D3 3K05 B7 3R33 E2 3V47 E3 6N60 C4 9A57 B5 9U05 C2
3C83 B8 3F12 B4 3H33 E4 3K07 B7 3R34 E2 3V48 E3 6T01 A8 9A58 B5 9U06 C2
3C85 B8 3F13 C4 3H34 E4 3K08 B7 3R35 E2 3V49 E3 6T02 A8 9C23 B8 9Y70 B5
3C86 B8 3F14 C4 3H35 E4 3K17 B7 3R36 E2 3V50 E3 6T03 A8 9C51 B7 9Y71 B5
3D00 F6 3F15 B3 3H36 D4 3K18 B7 3R37 E2 3V51 E3 6T04 A7 9C52 B8 9Y72 B5
3D01 F6 3F17 B4 3H37 E4 3K19 B7 3T01 A8 3V52 E3 6T05 A7 9C53 B7 9Y73 B5
3D02 F6 3F22 B4 3H38 E4 3K24 B7 3T02 A8 3V53 E3 6T06 A8 9C54 B7 9Y74 B5
3D03 E6 3F23 B3 3H39 E4 3K25 B7 3T03 A6 3V54 E3 6T07 A9 9C56 B7 9Y75 B5
3D04 E6 3F24 B3 3H40 E4 3K26 B7 3T04 A8 3V55 E3 6T08 A9 9C57 B7 9Y76 B5
3D05 E6 3F25 B4 3H41 E4 3K27 B7 3T05 A6 3V56 E3 6U01 C1 9C58 B7 9Y77 B5
3D06 E6 3F26 B4 3H42 F2 3K28 B7 3T06 A8 3V57 E3 6U02 D1 9D56 E6 9Y78 B5
3D07 E6 3F27 C3 3H43 F2 3K29 B7 3T07 A8 3V58 E3 6U03 E1 9D57 E6 9Y79 B5
3D08 E6 3F28 D3 3H44 F2 3K30 B7 3T09 A8 3V59 E3 6U04 D2 9D58 F6 9Y80 B4
3D09 F6 3F29 C4 3H65 E4 3K31 B7 3T11 A8 3V60 E3 6U05 C2 9D60 E6 9Y81 B5
3D10 E6 3F30 C3 3H66 E4 3K32 B6 3T13 A9 3V61 E4 6U06 C2 9D61 E6 9Y82 B4
3D11 E6 3F32 C3 3H67 D3 3K33 B6 3T14 A9 3V62 E4 6U07 C2 9D64 E6 9Y83 B5
3D12 E6 3F33 B3 3H68 D3 3K34 B6 3T15 A8 3V63 E4 6U11 C2 9D65 E6 9Y84 B5
3D13 F6 3F34 C4 3H69 D3 3K35 B7 3T16 A9 3V64 E4 6U12 C2 9D66 E6 9Y85 B5
3D14 F6 3F35 B4 3H72 D3 3K36 B6 3T17 A9 3V65 E4 6U13 D2 9D76 E6 9Y86 B5
3D15 E6 3F36 D3 3H73 E4 3K37 B7 3T18 A9 3V66 E4 6U14 C2 9D83 E7
3D16 E6 3F37 C4 3H74 E4 3M01 D1 3T19 A9 3V67 E4 6U15 C1 9E39 A4
3D17 E6 3F38 B4 3H76 D4 3M02 D1 3T20 A9 3V68 E4 6U16 D1 9E41 A4
3D18 E6 3F39 B3 3H77 D4 3M04 F1 3T21 A9 3V69 E3 6U17 D2 9F02 C3
3D19 E6 3F40 B4 3H78 D4 3M05 D1 3T22 A9 3V70 E4 6U18 C2 9F03 C3
3D20 E7 3F41 B3 3H79 E4 3M14 F8 3T23 A9 3V71 E3 6U19 C2 9F04 C3
3D21 E7 3F42 C3 3H80 D4 3M15 F8 3T24 A8 3V72 E4 6U20 C2 9F05 C3
3D22 E7 3F43 C3 3H81 D4 3M16 F8 3T25 A6 3V73 E3 6U21 C3 9F06 B4
3D23 E7 3F44 B3 3H83 E3 3M17 F8 3U01 D2 3V74 E3 6U22 E2 9F09 C3
3D24 E7 3F45 C4 3H85 D3 3M22 D1 3U02 D2 3V75 E3 6Y00 B5 9F10 D4
3D25 E7 3F46 C4 3H87 E3 3M30 E1 3U03 C2 3V76 E3 7A00 C5 9F11 C4
3D26 E7 3F49 B4 3H90 E3 3M31 E1 3U04 D1 3V77 E4 7A32 B4 9F12 C3
3D28 E8 3F50 B3 3H91 D4 3M33 E1 3U05 C1 3V78 E3 7A55 B5 9F14 B4
3D29 E7 3F51 B4 3H92 D4 3M34 F1 3U06 B1 3V79 E3 7A60 B6 9F15 B4
3D30 E8 3F52 B3 3H93 D3 3M35 E1 3U07 C2 3V80 E3 7A61 B6 9F16 B4
3D32 E7 3F53 B4 3H94 D3 3M36 F1 3U08 D2 3Y03 B5 7C00 C7 9F17 B3
3D33 E7 3F55 B4 3H96 D4 3M42 E1 3U09 C2 3Y04 B5 7C55 B7 9G00 E5
3D34 E7 3F56 B4 3H98 F3 3M43 E1 3U10 C1 3Y05 B5 7C57 B8 9G01 E5
3D35 E7 3F57 B3 3H99 F2 3M44 E1 3U11 C1 3Y07 B5 7C60 B8 9G02 E5
3D36 E7 3F58 C3 3I01 A2 3M47 E1 3U12 B1 3Y08 B5 7C61 B8 9G03 E5
3D37 E7 3F59 C3 3I02 A2 3M50 E1 3U13 B1 3Y17 B5 7D01 F6 9G04 F5
3D38 E7 3F62 C3 3I03 A2 3M51 E1 3U14 D2 3Y20 B5 7D02 E6 9G05 F5
3D39 E7 3F63 C3 3I04 A2 3M52 E1 3U15 C2 3Y82 B4 7D03 E6 9G06 E5
3D40 E7 3F66 C4 3I05 A2 3M53 E1 3U16 D1 3Y88 B4 7D04 E8 9G07 E6

Layout Small Signal Board (Part 1 Bottom Side)

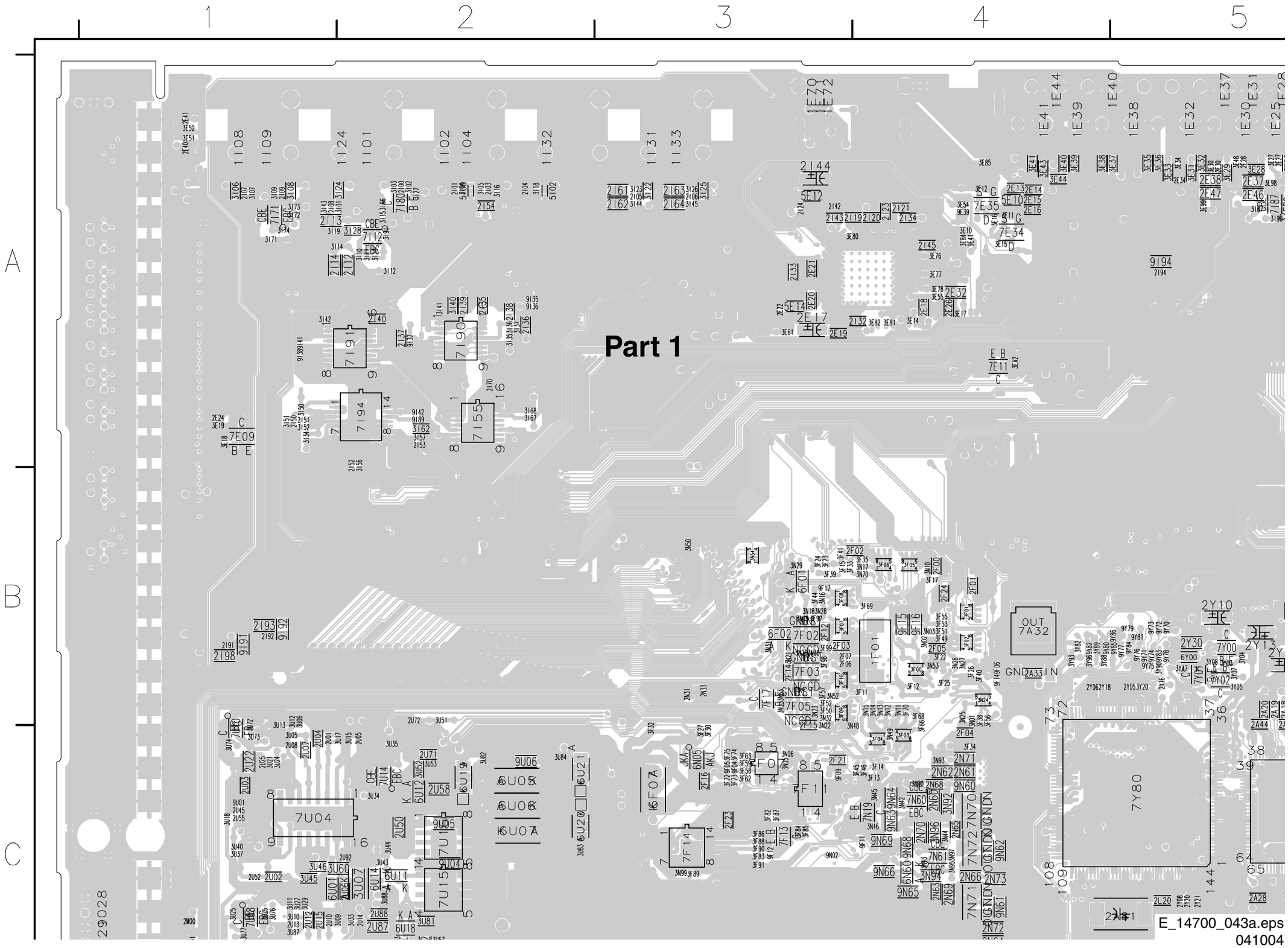

E_14700_043a.eps
041004

Layout Small Signal Board (Part 2 Bottom Side)

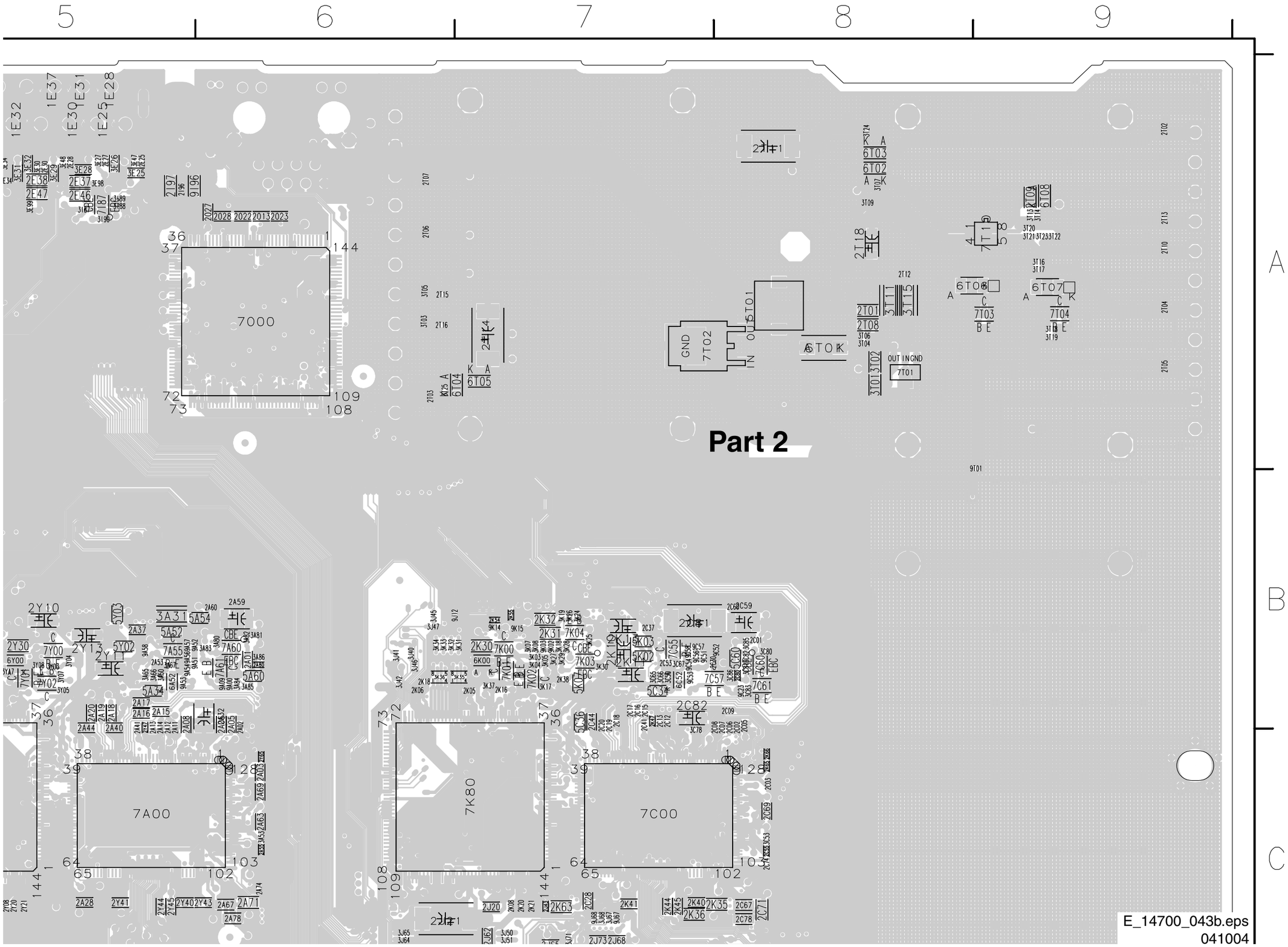

Layout Small Signal Board (Part 3 Bottom Side)

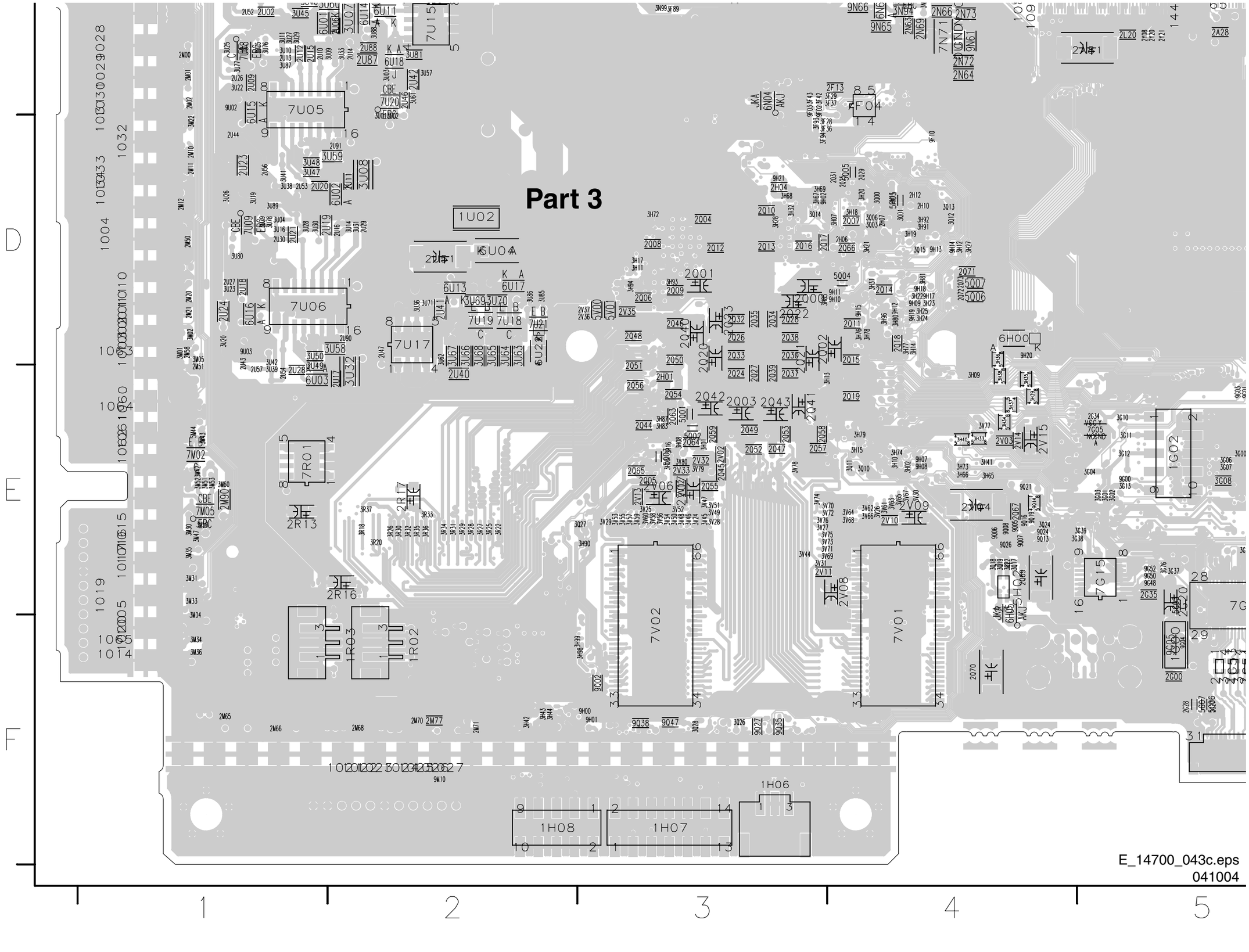

Layout Small Signal Board (Part 4 Bottom Side)

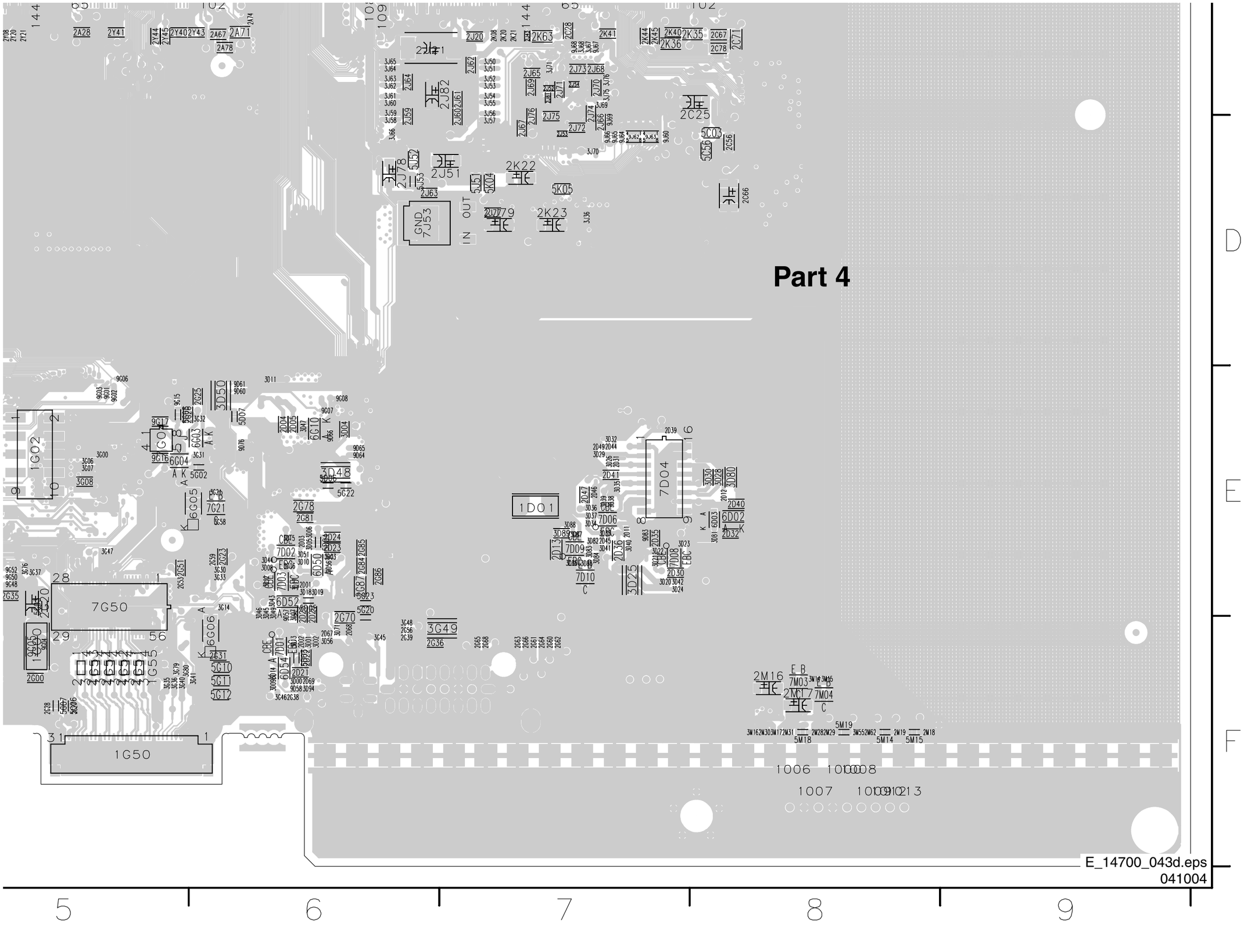

External I/O 1

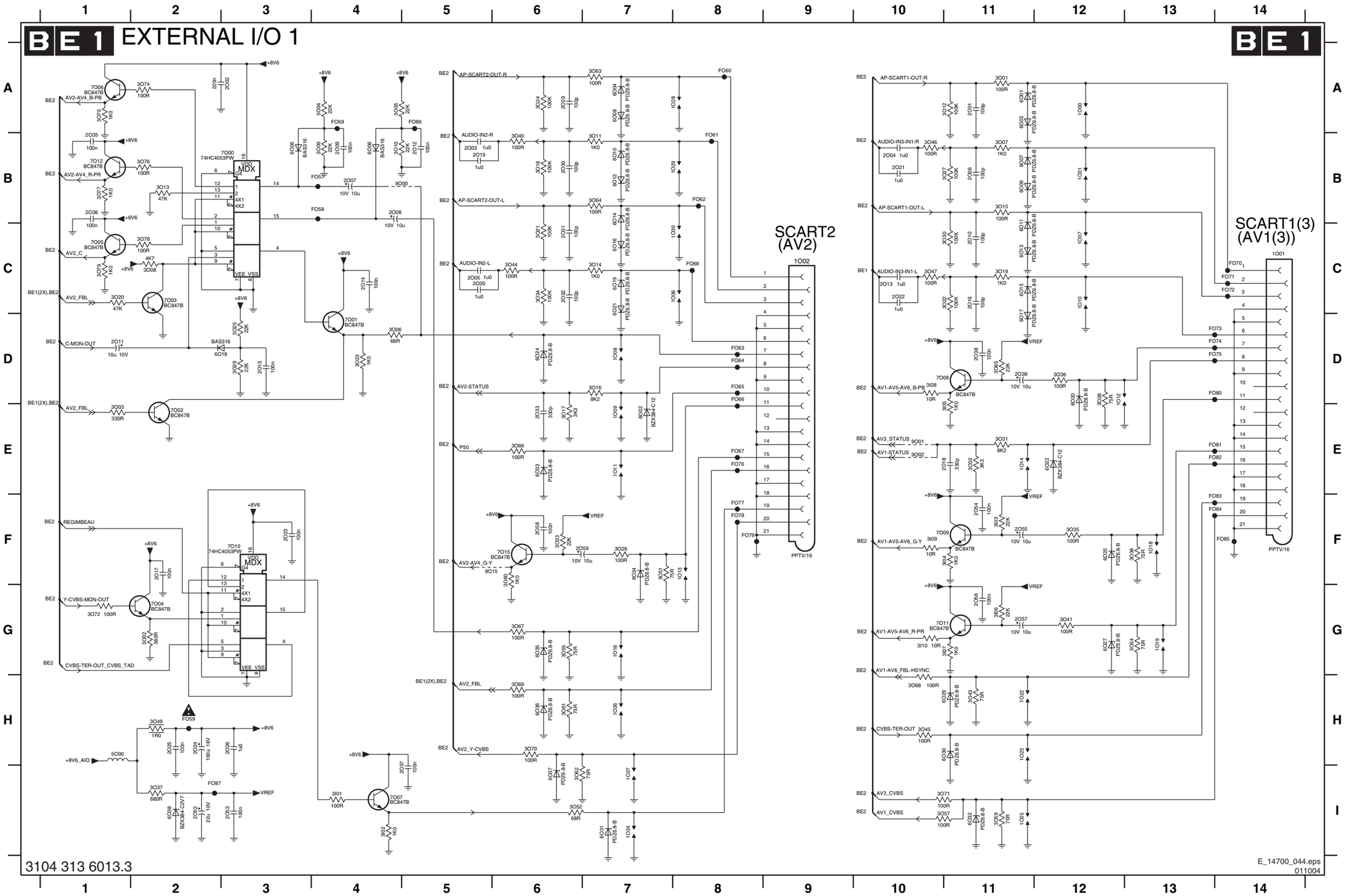

1O00 A12	3O34 C6	FO77 F8
1O01 C14	3O35 F12	FO78 F8
1O02 C9	3O36 D12	FO79 F8
1O06 C8	3O37 I2	FO80 D14
1O07 C12	3O38 F13	FO81 E14
1O08 D7	3O40 B6	FO82 E14
1O09 E7	3O41 G12	FO83 F14
1O10 C12	3O43 H11	FO84 F14
1O11 E7	3O44 C6	FO85 F14
1O12 D12	3O45 H10	FO86 A5
1O13 F8	3O46 B10	FO87 I2
1O14 E11	3O47 C10	
1O16 G7	3O49 H2	
1O18 F13	3O51 F7	
1O19 G13	3O52 I6	
1O22 H11	3O54 G13	
1O23 H11	3O55 G6	
1O24 I7	3O57 I10	
1O25 I11	3O59 I11	
1O26 H7	3O60 F6	
1O27 I7	3O61 H6	
1O28 A8	3O62 I6	
1O29 B8	3O63 A7	
1O30 C8	3O64 B7	
1O31 B12	3O65 D11	
2O01 A11	3O66 E6	
2O02 A3	3O67 G6	
2O03 B5	3O68 H10	
2O04 B10	3O69 H6	
2O05 C5	3O70 H6	
2O06 B11	3O71 I10	
2O07 B4	3O72 G1	
2O08 B4	3O74 A2	
2O09 B4	3O75 A1	
2O10 C11	3O76 B2	
2O11 D1	3O77 B1	
2O12 B5	3O78 C2	
2O13 C10	3O79 C1	
2O14 C4	5O00 H1	
2O15 D3	6O01 A11	
2O16 C11	6O02 E7	
2O17 F2	6O03 A11	
2O18 E11	6O04 A7	
2O19 B5	6O05 B3	
2O20 C5	6O06 B4	
2O21 B10	6O07 B11	
2O22 C10	6O08 A7	
2O23 F3	6O09 B11	
2O24 H2	6O10 B7	
2O25 H2	6O11 C11	
2O26 H3	6O12 B7	
2O29 A6	6O13 C11	
2O30 B6	6O14 B7	
2O31 C6	6O15 C11	
2O32 C6	6O16 C7	
2O33 E6	6O17 D11	
2O35 B1	6O18 D2	
2O36 B1	6O19 C7	
2O37 I5	6O20 D12	
2O38 D11	6O21 C7	
2O39 D11	6O22 E12	
2O52 I2	6O24 D6	
2O53 I3	6O25 F12	
2O54 F11	6O27 G12	
2O55 F11	6O29 H11	
2O56 G11	6O30 H11	
2O57 G11	6O31 I7	
2O58 F6	6O32 I11	
2O59 F6	6O33 E6	
3I01 I4	6O34 F7	
3I02 I4	6O35 G6	
3I03 F11	6O36 H6	
3I04 F11	6O37 I6	
3I05 E11	6O38 I2	
3I06 G11	7O00 B3	
3I07 G11	7O01 D4	
3I08 D10	7O02 E2	
3I09 F10	7O03 C2	
3I10 G10	7O04 G2	
3O01 A11	7O05 C1	
3O02 G2	7O06 A1	
3O03 E1	7O07 I4	
3O04 A4	7O08 D11	
3O05 A4	7O09 F11	
3O06 D4	7O10 F3	
3O07 B11	7O11 G11	
3O08 C2	7O12 B1	
3O09 B4	7O15 F6	
3O10 B4	9O00 B4	
3O11 B7	9O01 E10	
3O12 A11	9O02 E10	
3O13 B2	9O15 F5	
3O14 C7	FO57 B4	
3O15 B11	FO58 B4	
3O16 D7	FO59 H2	
3O17 E6	FO60 A8	
3O18 B6	FO61 B8	
3O19 C11	FO62 B8	
3O20 C1	FO63 D8	
3O21 C6	FO64 D8	
3O22 C11	FO65 D8	
3O23 D4	FO66 D8	
3O24 A6	FO67 E8	
3O25 D3	FO68 C8	
3O26 F7	FO69 A4	
3O27 B11	FO70 C14	
3O28 D12	FO71 C14	
3O29 D3	FO72 C14	
3O30 C11	FO73 D14	
3O31 E11	FO74 D14	
3O32 E11	FO75 D14	
3O33 F6	FO76 E8	

External I/O 2

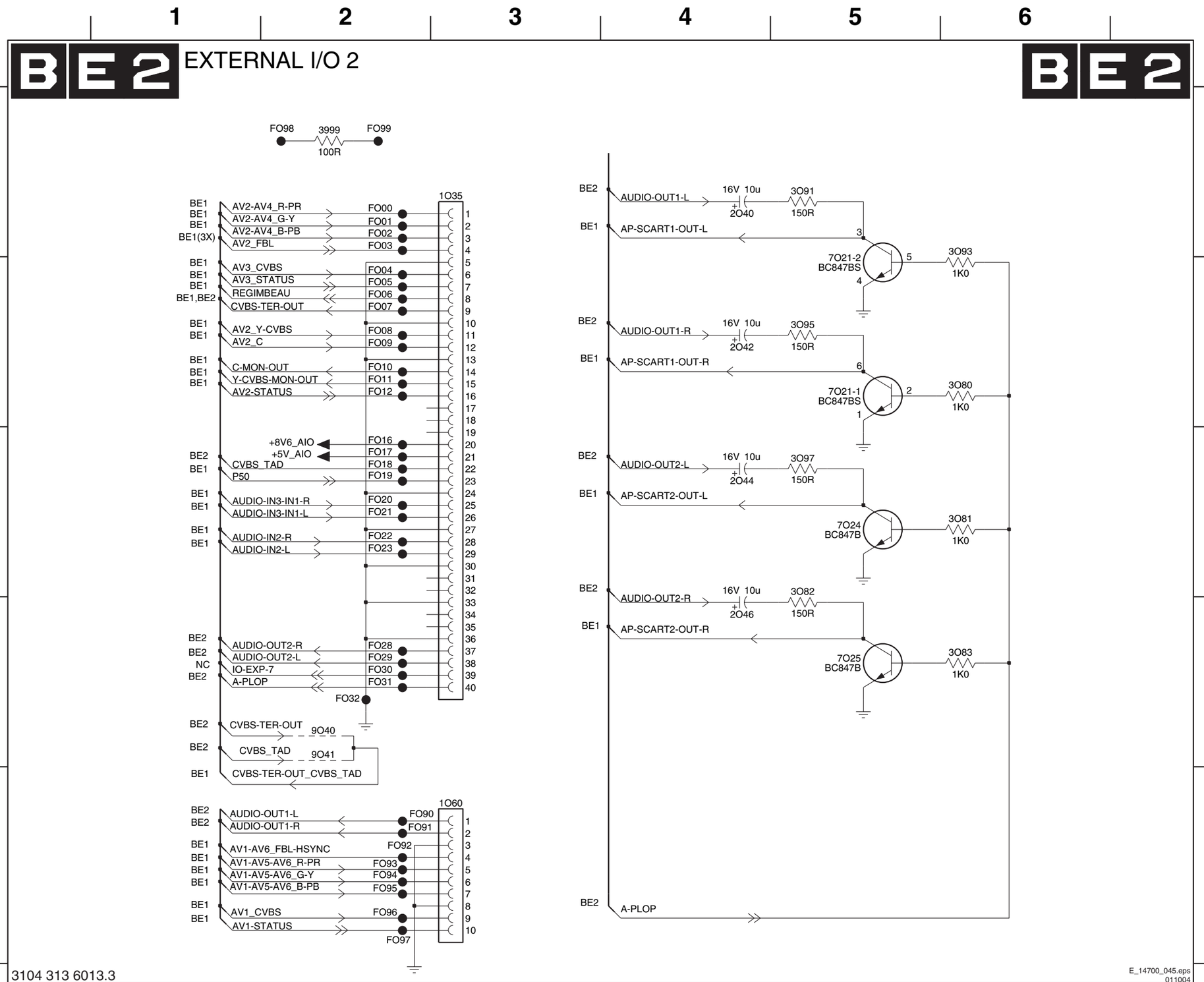

1O35 A3
1O60 E3
2O40 A4
2O42 B4
2O44 C4
2O46 D4
3999 A2
3O80 B6
3O81 C6
3O82 C5
3O83 D6
3O91 A5
3O93 A6
3O95 B5
3O97 C5
7O21-1 B5
7O21-2 B5
7O24 C5
7O25 D5
9O40 D2
9O41 E2
FO00 A2
FO01 A2
FO02 A2
FO03 A2
FO04 B2
FO05 B2
FO06 B2
FO07 B2
FO08 B2
FO09 B2
FO10 B2
FO11 B2
FO12 B2
FO16 C2
FO17 C2
FO18 C2
FO19 C2
FO20 C2
FO21 C2
FO22 C2
FO23 C2
FO28 D2
FO29 D2
FO30 D2
FO31 D2
FO32 D2
FO90 E2
FO91 E2
FO92 E2
FO93 E2
FO94 E2
FO95 E2
FO96 E2
FO97 E2
FO98 A2
FO99 A2

Layout External I/O Panel (Top Side)

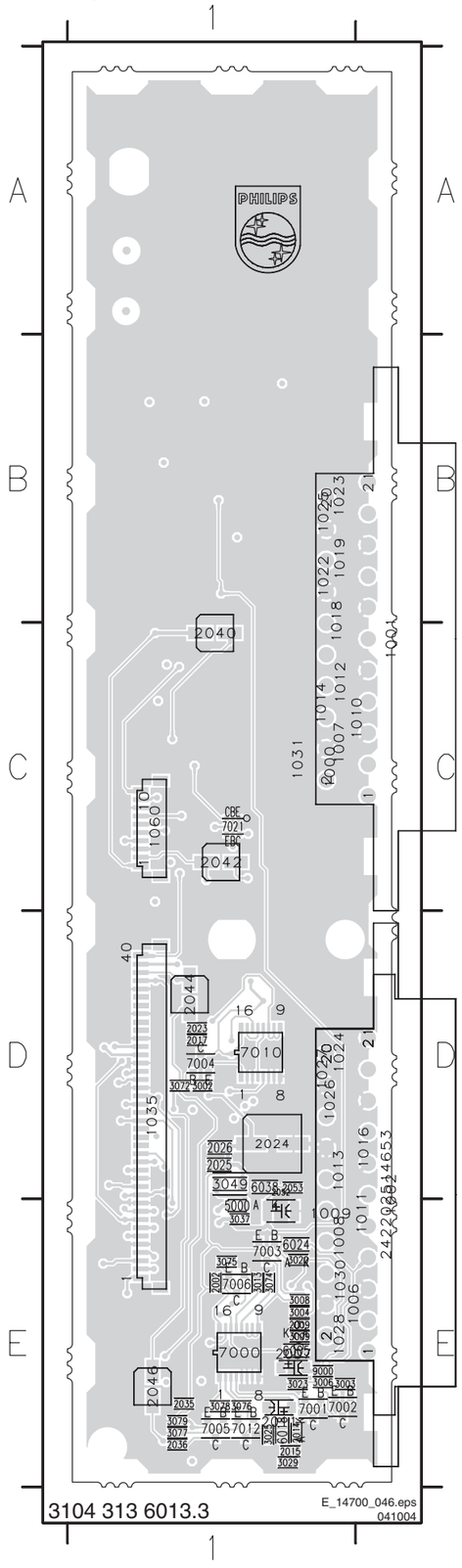

1O01 B1
1O02 D1
1O35 D1
1O60 C1
2O02 E1
2O07 E1
2O09 E1
2O11 E1
2O14 E1
2O15 E1
2O17 D1
2O23 D1
2O24 D1
2O25 D1
2O26 D1
2O35 E1
2O36 E1
2O40 B1
2O42 C1
2O44 D1
2O46 E1
2O52 D1
2O53 D1
3O02 D1
3O03 E1
3O04 E1
3O06 E1
3O08 E1
3O09 E1
3O13 E1
3O20 E1
3O23 E1
3O25 E1
3O29 E1
3O37 E1
3O49 D1
3O72 D1
3O74 E1
3O75 E1
3O76 E1
3O77 E1
3O78 E1
3O79 E1
5O00 E1
6O05 E1
6O18 E1
6O24 E1
6O38 D1
7O00 E1
7O01 E1
7O02 E1
7O03 E1
7O04 D1
7O05 E1
7O06 E1
7O10 D1
7O12 E1
7O21 C1
9O00 E1

Layout External I/O Panel (Bottom Side)

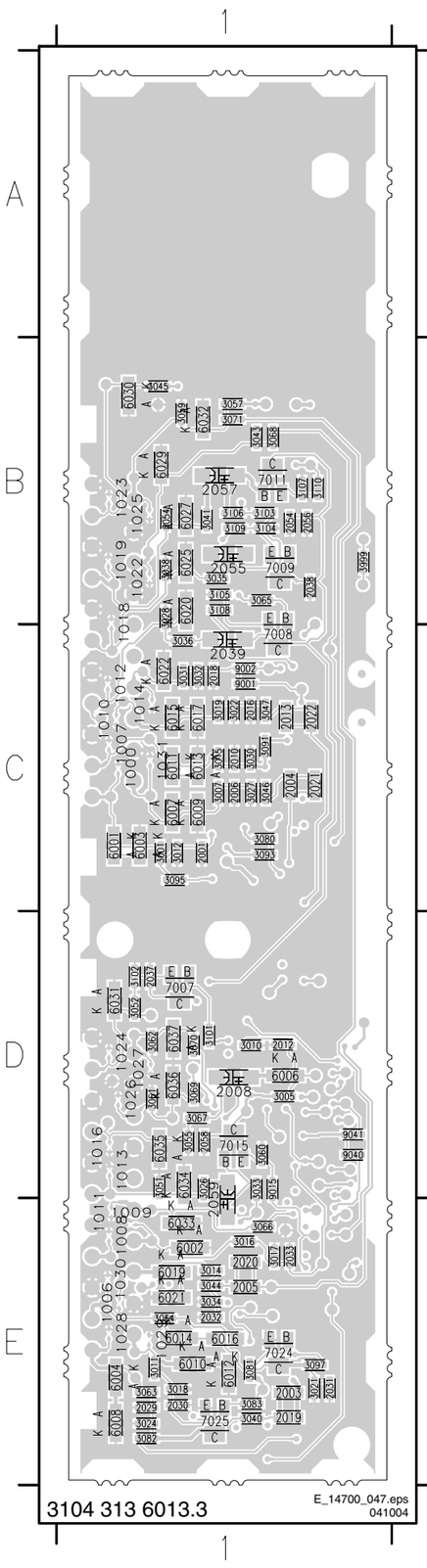

2O01 C1
2O03 E1
2O04 C1
2O05 E1
2O06 C1
2O08 D1
2O10 C1
2O12 D1
2O13 C1
2O16 C1
2O18 C1
2O19 E1
2O20 E1
2O21 C1
2O22 C1
2O29 E1
2O30 E1
2O31 E1
2O32 E1
2O33 E1
2O37 D1
2O38 B1
2O39 C1
2O54 B1
2O55 B1
2O56 B1
2O57 B1
2O58 D1
2O59 D1
3999 B1
3I01 D1
3I02 D1
3I03 B1
3I04 B1
3I05 B1
3I06 B1
3I07 B1
3I08 B1
3I09 B1
3I10 B1
3O01 C1
3O05 D1
3O07 C1
3O10 D1
3O11 E1
3O12 C1
3O14 E1
3O15 C1
3O16 E1
3O17 E1
3O18 E1
3O19 C1
3O21 E1
3O22 C1
3O24 E1
3O26 D1
3O27 C1
3O28 B1
3O30 C1
3O31 C1
3O32 C1
3O33 D1
3O34 E1
3O35 B1
3O36 C1
3O38 B1
3O40 E1
3O41 B1
3O43 B1
3O44 E1
3O45 B1
3O46 C1
3O47 C1
3O51 D1
3O52 D1
3O54 B1
3O55 D1
3O57 B1
3O59 B1
3O60 D1
3O61 D1
3O62 D1
3O63 E1
3O64 E1
3O65 B1
3O66 E1
3O67 D1
3O68 B1
3O69 D1
3O70 D1
3O71 B1
3O80 C1
3O81 E1
3O82 E1
3O83 E1
3O91 C1
3O93 C1
3O95 C1
3O97 E1
6O01 C1
6O02 E1
6O03 C1
6O04 E1
6O06 D1
6O07 C1
6O08 E1
6O09 C1
6O10 E1
6O11 C1
6O12 E1
6O13 C1
6O14 E1
6O15 C1
6O16 E1
6O17 C1
6O19 E1
6O20 B1
6O21 E1
6O22 C1
6O25 B1
6O27 B1
6O29 B1
6O30 B1
6O31 D1
6O32 B1
6O33 E1
6O34 D1
6O35 D1
6O36 D1
6O37 D1
7O07 D1
7O08 C1
7O09 B1
7O11 B1
7O15 D1
7O24 E1
7O25 E1
9O01 C1
9O02 C1
9O15 D1
9O40 D1
9O41 D1

Side I/O Panel

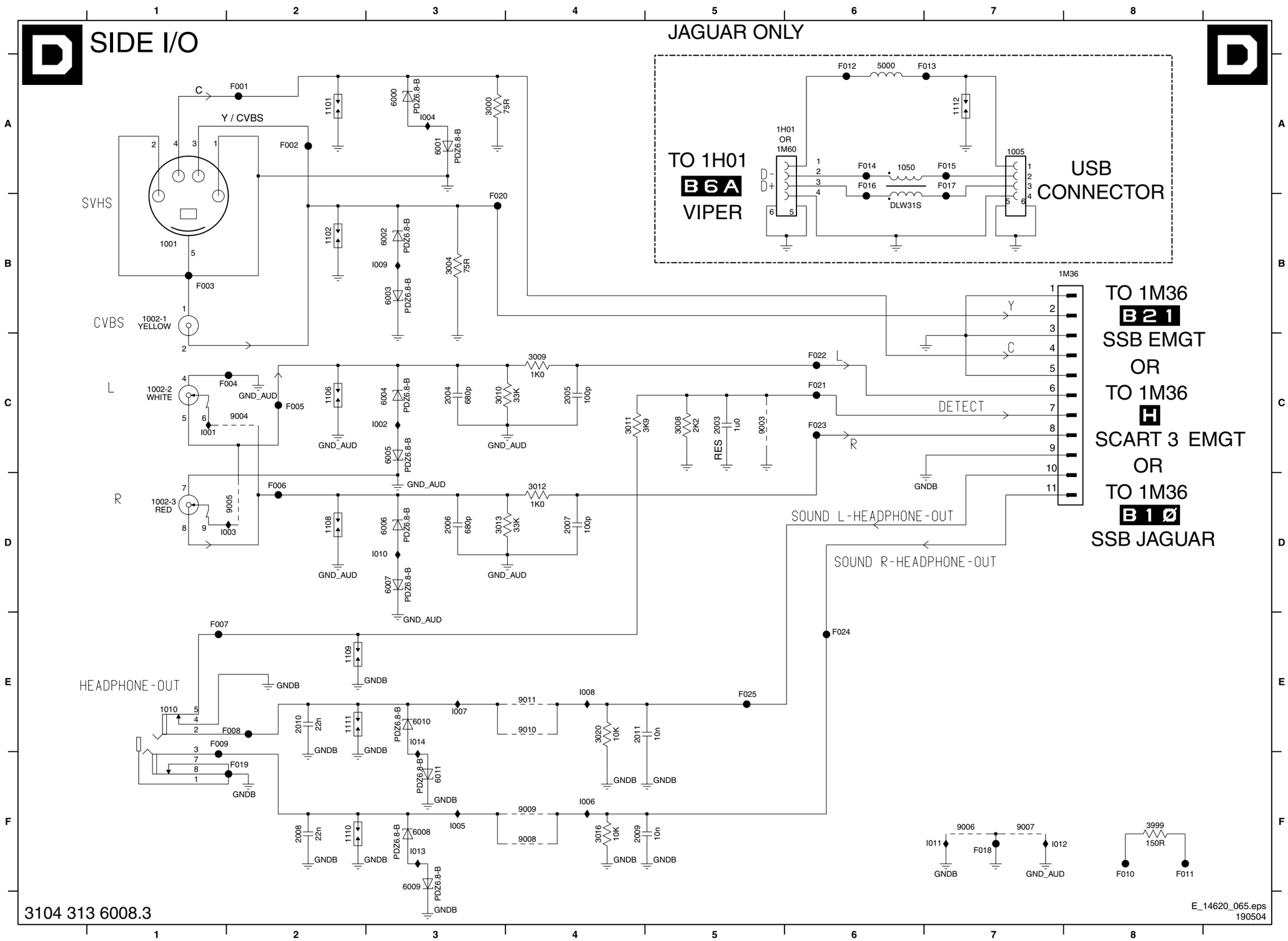

1001 B1	F003 B1	3999 F8
1002-1 B1	F004 C2	5000 A6
1002-2 C1	F005 C2	6000 A3
1002-3 D1	F006 D2	6001 A3
1005 A7	F007 E1	6002 B3
1010 E1	F008 E2	6003 B3
1050 A6	F009 E1	6004 C3
1101 A2	F010 F8	6005 C3
1102 B2	F011 F8	6006 D3
1106 C2	F012 A6	6007 D3
1108 D2	F013 A7	6008 F3
1109 E2	F014 A6	6009 F3
1110 F2	F015 A7	6010 E3
1111 E2	F016 A6	6011 F3
1112 A7	F017 A7	9003 C5
1H01 A6	F018 F7	9004 C2
1M36 B8	F019 F2	9005 D1
2003 C5	F020 B3	9006 F7
2004 C3	F021 C6	9007 F7
2005 C4	F022 C6	9008 F4
2006 D3	F023 C6	9009 F4
2007 D4	F024 E6	9010 E4
2008 F2	F025 E5	9011 E4
2009 F4	I001 C1	F001 A2
2010 E2	I002 C3	F002 A2
2011 E4	I003 D2	
3000 A3	I004 A3	
3004 B3	I005 F3	
3008 C5	I006 F4	
3009 C4	I007 E3	
3010 C3	I008 E4	
3011 C4	I009 B3	
3012 D4	I010 D3	
3013 D3	I011 F7	
3016 F4	I012 F7	
3020 E4	I013 F3	
	I014 E3	

Layout Side I/O Panel (Top Side)

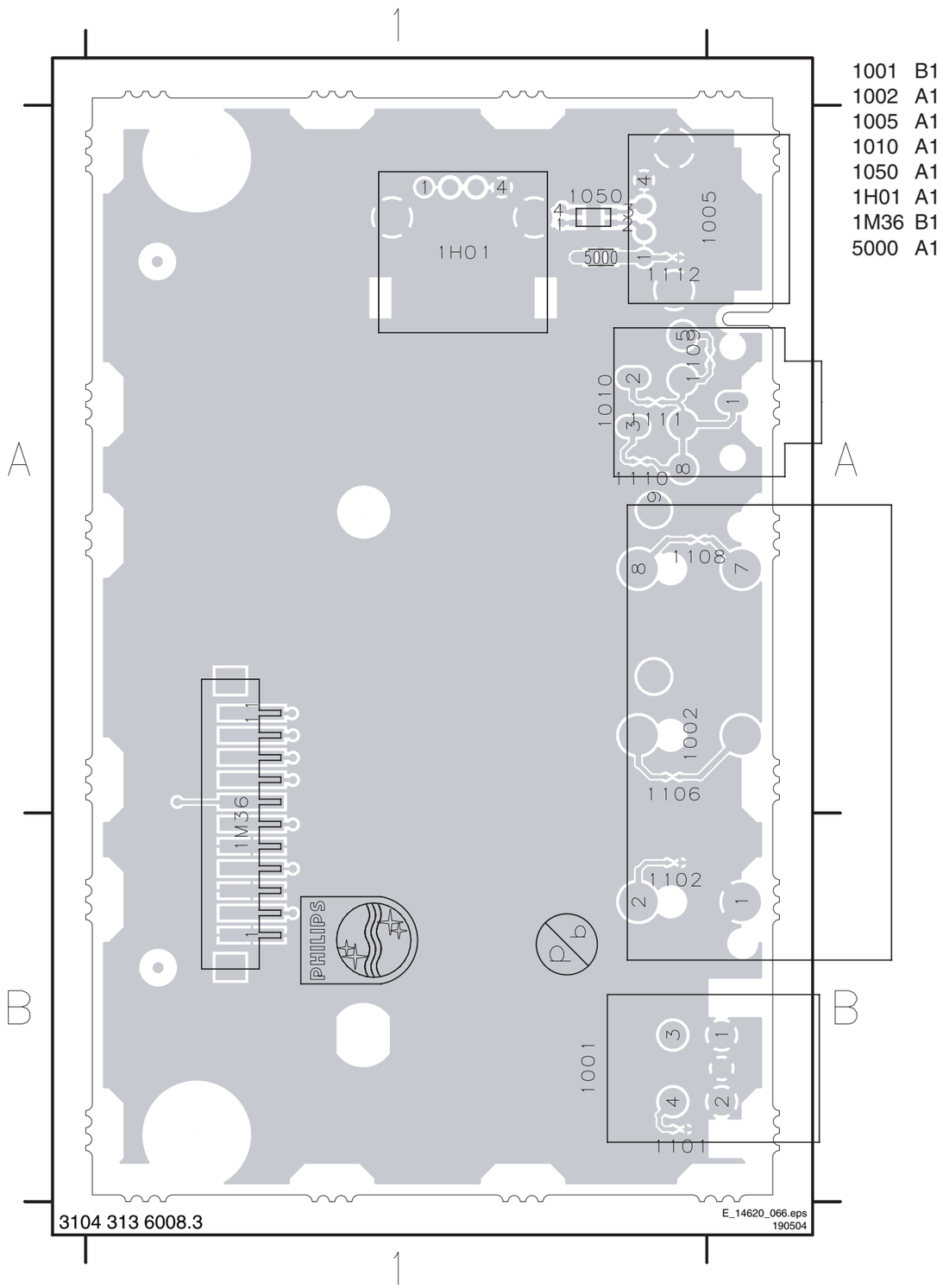

Layout Side I/O Panel (Bottom Side)

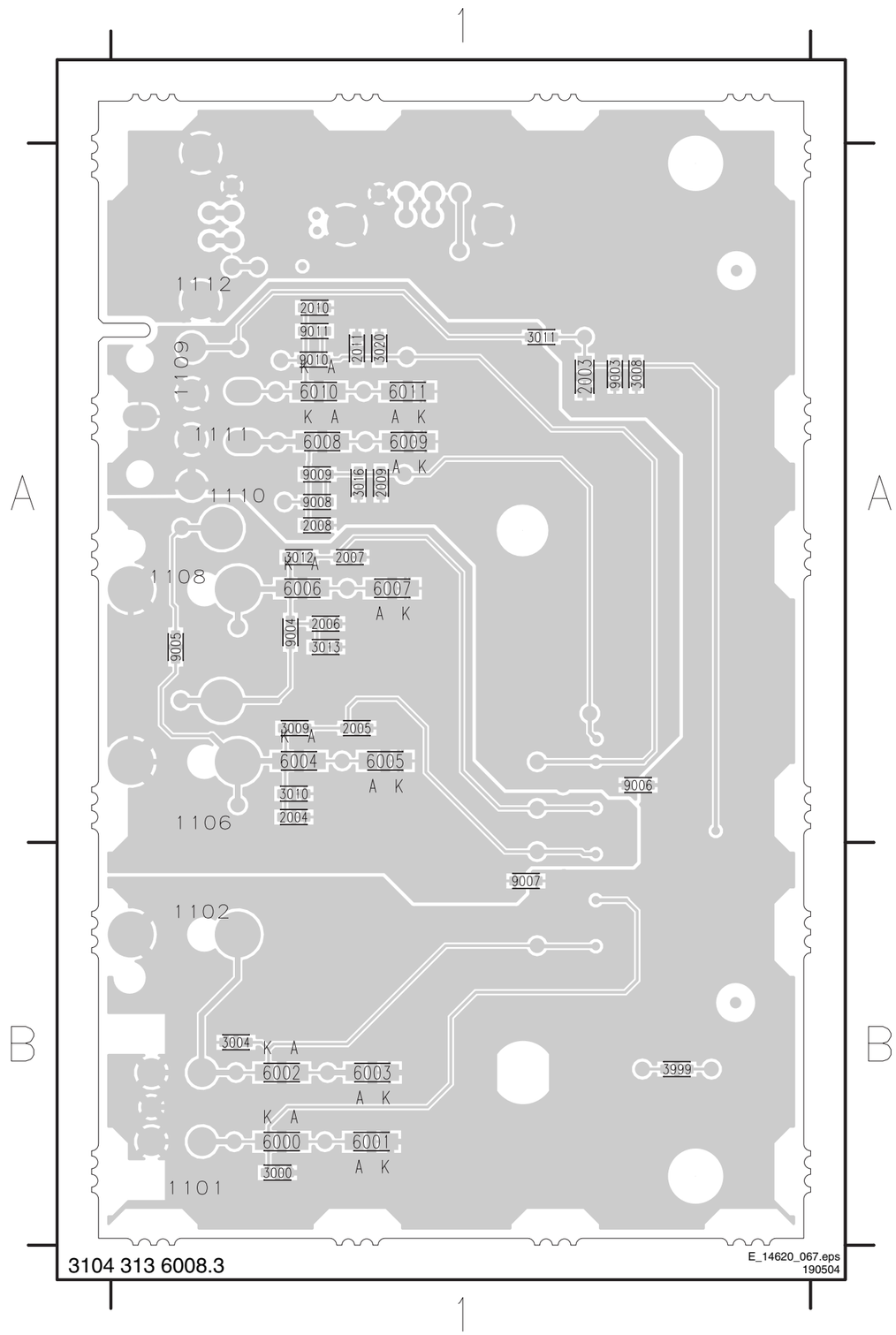

Top Control Panel

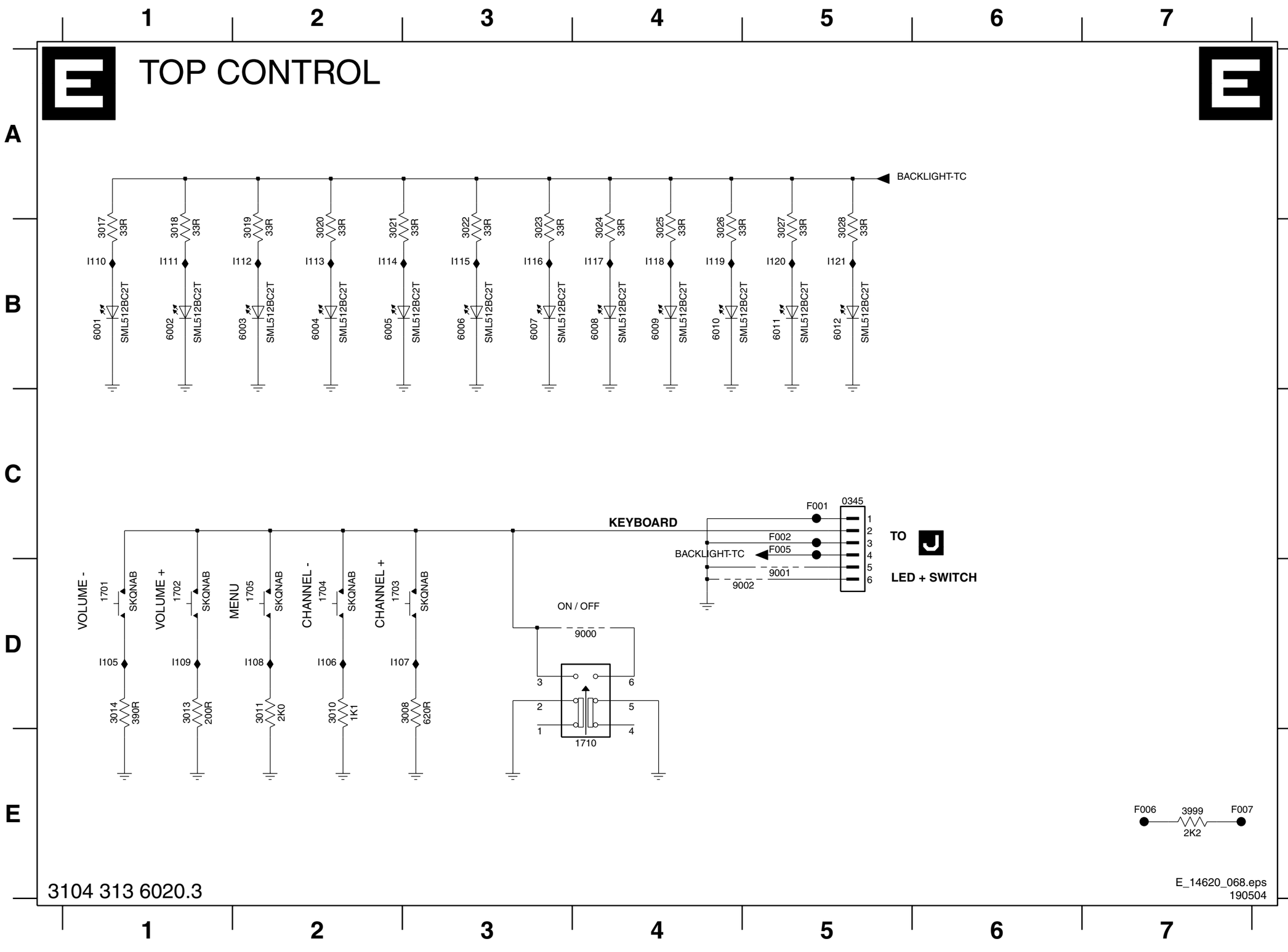

0345 C5
1701 D1
1702 D1
1703 D2
1704 D2
1705 D2
1710 E4
3008 D3
3010 D2
3011 D2
3013 D1
3014 D1
3017 B1
3018 B1
3019 B2
3020 B2
3021 B2
3022 B3
3023 B3
3024 B4
3025 B4
3026 B4
3027 B5
3028 B5
3999 E7
6001 B1
6002 B1
6003 B2
6004 B2
6005 B2
6006 B3
6007 B3
6008 B4
6009 B4
6010 B4
6011 B5
6012 B5
9000 D4
9001 D5
9002 D5
F001 C5
F002 C5
F005 C5
F006 E7
F007 E7
I105 D1
I106 D2
I107 D2
I108 D2
I109 D1
I110 B1
I111 B1
I112 B2
I113 B2
I114 B2
I115 B3
I116 B3
I117 B4
I118 B4
I119 B4
I120 B5
I121 B5

Layout Top Control Panel (Top Side)

0345 1702 1704 1710 3010 3013 3017 3019 3021 3023 3025 3027 3999 6002 6004 6006 6008 6010 6012 9001
1701 1703 1705 3008 3011 3014 3018 3020 3022 3024 3026 3028 6001 6003 6005 6007 6009 6011 9000 9002

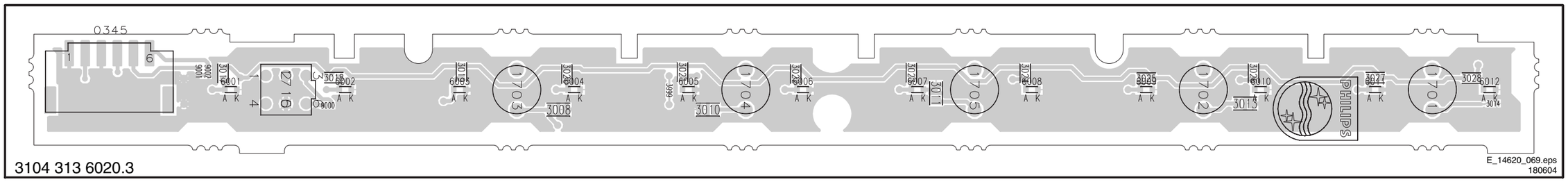

3104 313 6020.3

E_14620_069.eps
180604

Layout Top Control Panel (Bottom Side)

3104 313 6020.3

E_14620_069a.eps
041004

LED and Switch Panel

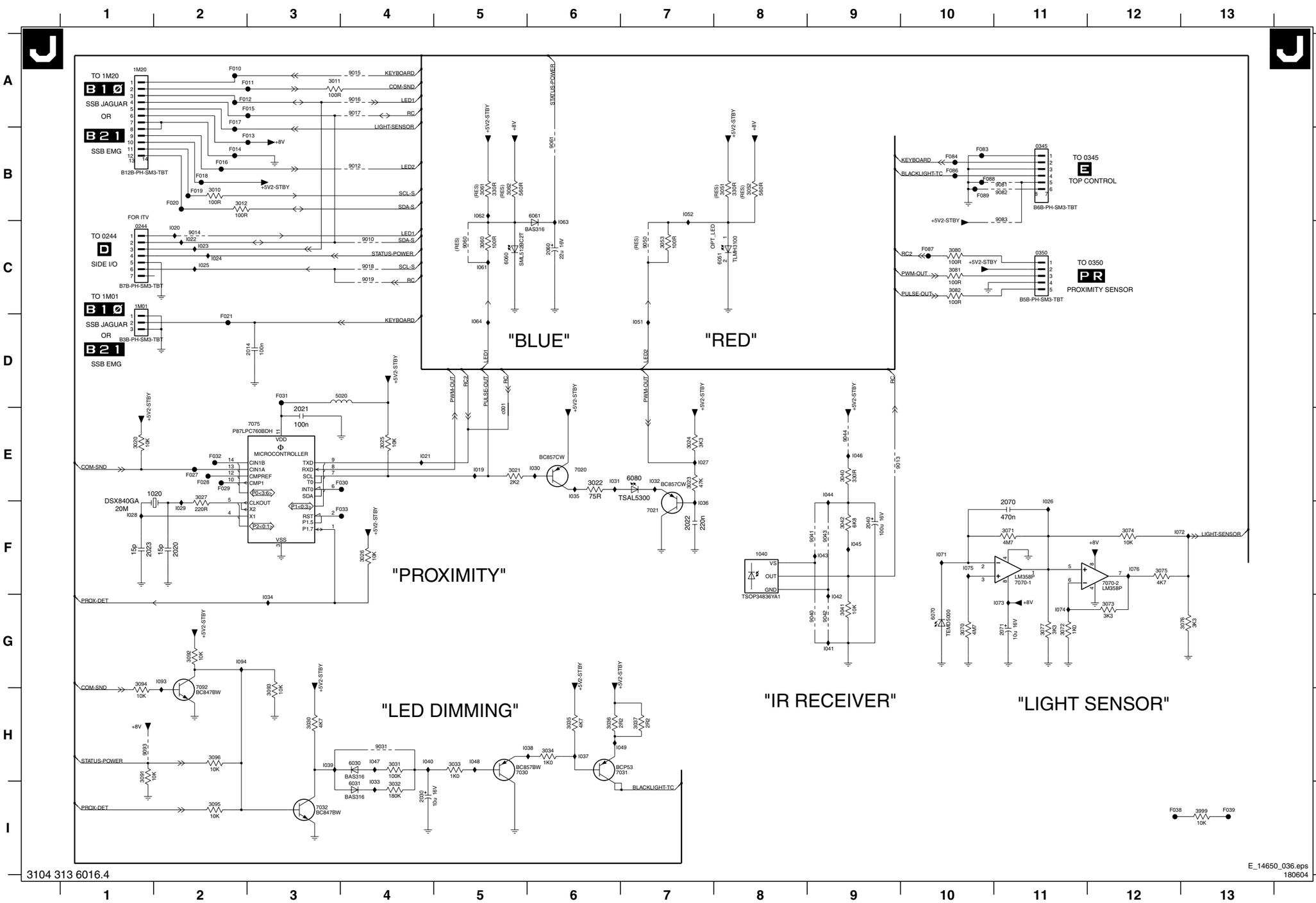

3104 313 6016.4

0244 C1
0345 B11
0350 C11
1020 E2
1040 F8
1M01 C1
1M20 A1
2014 D3
2020 F2
2021 E3
2022 F7
2023 F1
2030 I4
2040 F9
2060 C6
2070 F11
2071 G11
3010 B2
3011 A3
3012 B2
3020 E1
3021 E5
3022 E6
3023 E7
3024 E7
3025 E4
3026 F4
3027 E2
3030 H3
3031 H4
3032 I4
3033 H5
3034 H6
3035 H6
3036 H6
3037 H7
3040 E9
3041 G9
3042 F9
3051 B8
3052 B8
3053 C7
3060 C5
3061 B5
3062 B5
3070 G10
3071 F11
3072 G11
3073 G12
3074 F12
3075 F12
3076 G13
3077 G11
3080 C10
3081 C10
3082 C10
3091 H1
3092 G2
3093 H3
3094 G1
3095 I2
3096 H2
3999 I13
5020 D4
6030 H4
6031 I4
6051 C8
6060 C5
6061 B6
6070 G10
6080 E7
7020 E6
7021 F7
7030 H5
7031 H6
7032 I3
7070-1 F11
7070-2 F12
7075 E3
7092 H2
9010 C4
9012 B4
9013 E9
9014 C2
9015 A4
9016 A4
9017 A4
9018 C4
9019 C4
9031 H4
9040 G9
9041 F9
9042 G9
9043 F9
9044 E9
9050 C7
9060 C5
9061 B6
9081 B11
9082 B11
9083 C11
9093 H1
F010 A2
F011 A3
F012 A2
F013 B3
F014 B2
F015 A3
F016 B2
F017 A2
F018 B2
F019 B2
F020 B2
F021 D2
F027 E2
F028 E2
F029 E2
F030 E4
F031 D3
F032 E2
F033 F4
F038 I12
F039 I13
I019 E5
I020 C2
I021 E4
I022 C2
I023 C2
I024 C2
I025 C2
I026 F11
I027 E7
I028 F1
I029 F2
I030 E6
I031 E6
I032 E7
I033 I4
I034 G3
I035 E6
I036 F7
I037 H6
I038 H6
I039 H3
I040 H4
I041 G9
I042 G9
I043 F9
I044 E9
I045 F9
I046 E9
I047 H4
I048 H5
I049 H7
I051 D7
I052 B7
I061 C5
I062 B5
I063 C6
I064 D5
I071 F10
I072 F12
I073 G11
I074 G11
I075 F10
I076 F12
I093 G2
I094 G2
c001 E5

Layout LED and Switch Panel (Top Side)

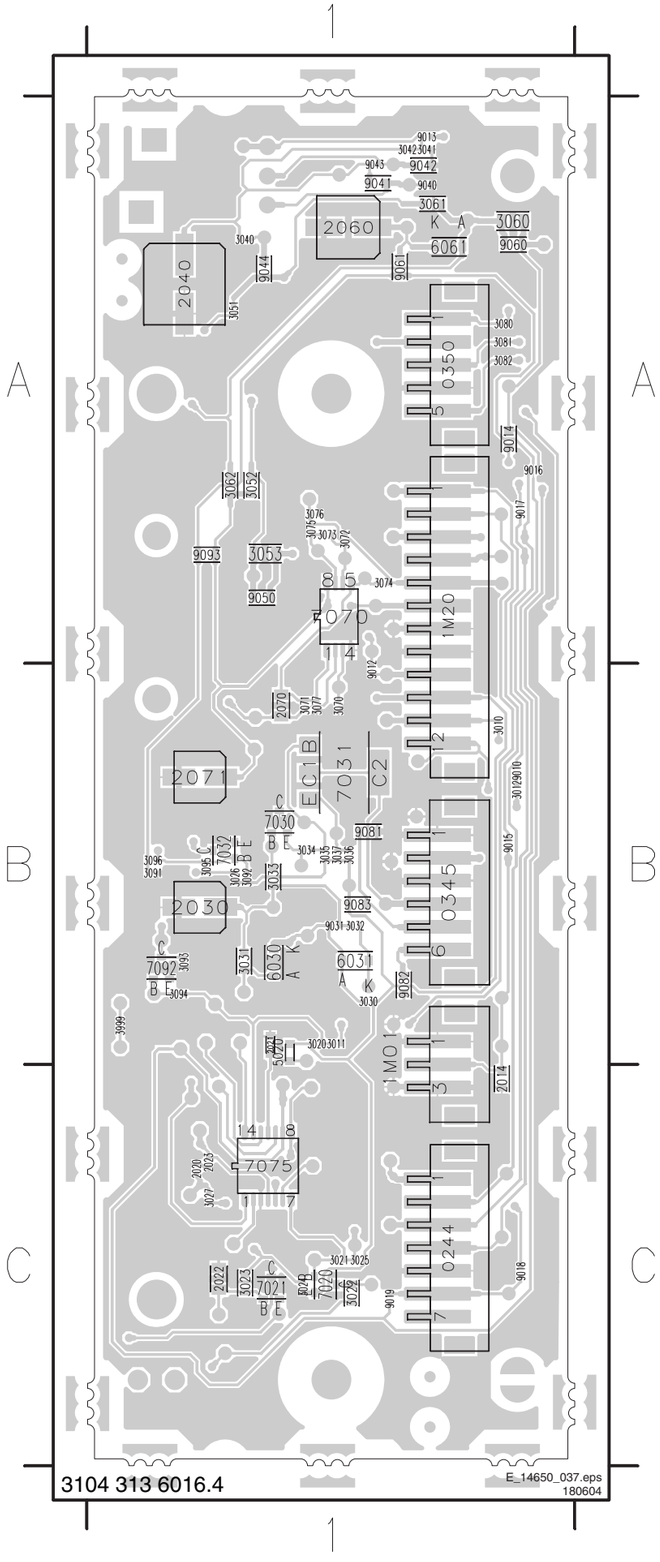

0244 C1
0345 B1
0350 A1
1040 A1
1M01 B1
1M20 A1
2014 C1
2020 C1
2021 B1
2022 C1
2023 C1
2030 B1
2040 A1
2060 A1
2070 B1
2071 B1
3010 B1
3011 B1
3012 B1
3020 B1
3021 C1
3022 C1
3023 C1
3024 C1
3025 C1
3026 B1
3027 C1
3030 B1
3031 B1
3032 B1
3033 B1
3034 B1
3035 B1
3036 B1
3037 B1
3040 A1
3041 A1
3042 A1
3051 A1
3052 A1
3053 A1
3060 A1
3061 A1
3062 A1
3070 B1
3071 B1
3072 A1
3073 A1
3074 A1
3075 A1
3076 A1
3077 B1
3080 A1
3081 A1
3082 A1
3091 B1
3092 B1
3093 B1
3094 B1
3095 B1
3096 B1
3999 B1
5020 B1
6030 B1
6031 B1
6061 A1
6080 C1
7020 C1
7021 C1
7030 B1
7031 B1
7032 B1
7070 A1
7075 C1
7092 B1
9010 B1
9012 B1
9013 A1
9014 A1
9015 B1
9016 A1
9017 A1
9018 C1
9019 C1
9031 B1
9040 A1
9041 A1
9042 A1
9043 A1
9044 A1
9050 A1
9060 A1
9061 A1
9081 B1
9082 B1
9083 B1
9093 A1

Layout LED and Switch Panel (Bottom Side)

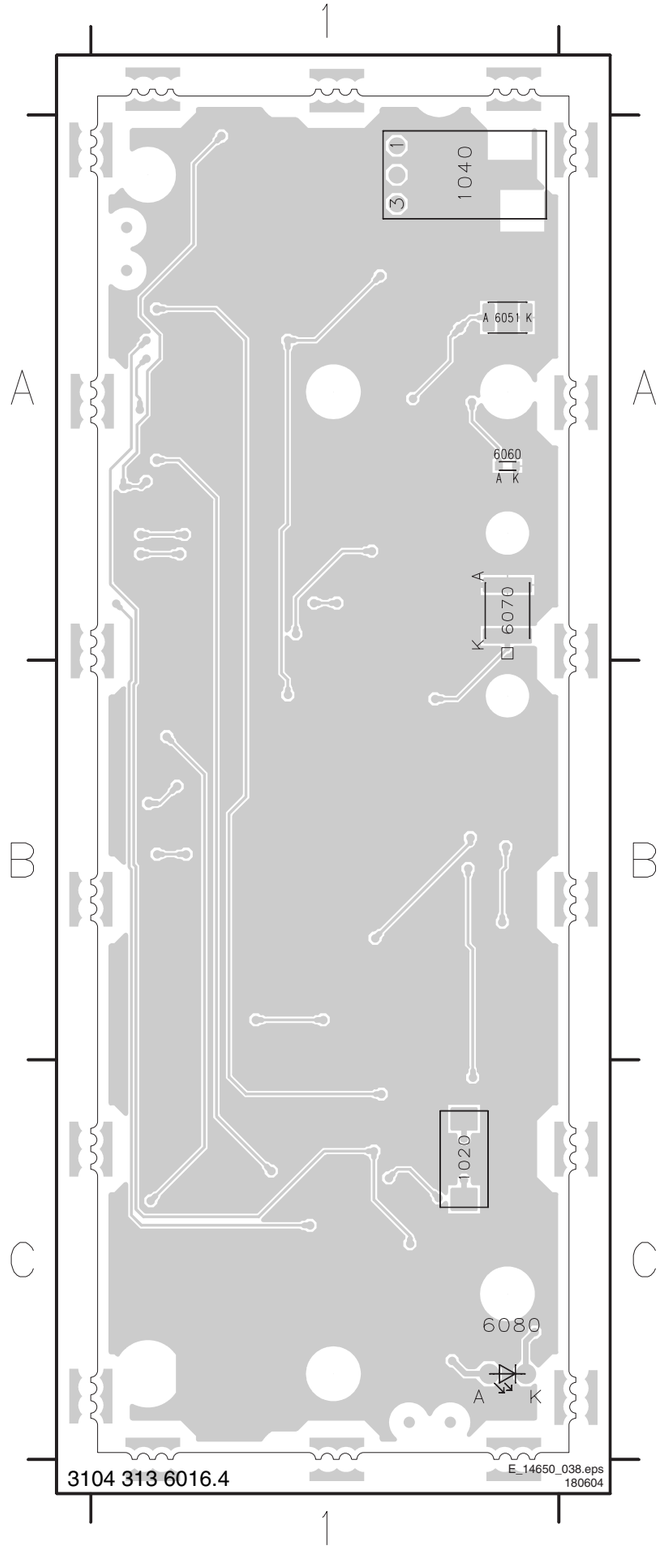

1020 C1
1040 A1
6051 A1
6060 A1
6070 A1
6080 C1

LCD Standby Audio Panel: Connections

SA1 CONNECTIONS

SA1

TO DISPLAY 1314 — PH-B — GND-SSP
TO DISPLAY 1315 — PH-B
TO DISPLAY 1316 — B12P-PH-K
TO DISPLAY 1317 — B12P-PH-K
1318 — B6B-PH-K
+5V_SW, +5V_SW
9008 RES F137 9009 RES F138
9002 RES GND-SSP, 9003 RES GND-SSP
GND-SSP
ON_OFF SA1
ON_OFF SA1 (3x)
DIM_CONTROL SA1
DIM_CONTROL SA1
POR SA2
ON_OFF SA1 (3x)
+5V_SW 9113 GND-SSP
DIM_CONTROL SA1
STANDBY SA2
ON_OFF SA1 (3x)
PROT_AUDIOSUPPLY SA2
+5V2-RELAY-IO2
F111 F113 F115 F121 F139 F122
1M03 — PH-B
TO 1313 — 440091-7
TO 1312 — 440091-7
F102 F104 F105 F106 F107 F119
GND-SSP
TO 1303 A4 LCD SUPPLY 42"
1303 — B4P-VH
+24V_2 F103 F110
1M10 — B4B-PH-K
TO AL AMBI LIGHT
1320 — B3P-VH — GND-SSP
TO 1320 A4 LCD SUPPLY 42"
1304 — B4P-VH
F101 +12V_+24V
9018
F108 +12V_A
TO 1304 A2 LCD SUPPLY 30"/37"/42"
F120
9004 5018 68u RES 9010
9005 5019 68u RES 9011
9006 9007
1309 — B3P-VH — GND-SSP
F112
TO 1309 A2 LCD SUPPLY 30"/37"/42"
3190 1K2, 3191 1K2, 3192 1K2
GND-SSP
TO 1M03 B21 SSB EMG
OR
TO 1M03 B1Ø SSB JAGUAR
0001 GND screw 1 GND-SSP
F131 GND-SSP
F135 +8V6
F136 +12V
F109 +5V_SW
GND-SSP
F114 +5V2 F132
VTUN
+12V
9V_STBY
F117
9V_STBY_SW
9001
1M46 — B11B-PH-K
TO 1M46 B21 SSB EMG
OR
TO 1M46 B1Ø SSB JAGUAR

0001 E1
1303 A9
1304 B9
1309 D9
1312 A8
1313 A7
1314 B1
1315 B2
1316 A3
1317 A4
1318 A5
1320 B9
1M03 B7
1M10 A9
1M46 D7
3190 D9
3191 D9
3192 D9
5018 C8
5019 D8
9001 E6
9002 B5
9003 B5
9004 C8
9005 D8
9006 C9
9007 C9
9008 A5
9009 A5
9010 C8
9011 D8
9018 B10
9113 B6
F101 B10
F102 A8
F103 A9
F104 A7
F105 A7
F106 A7
F107 B7
F108 B10
F109 E6
F110 B9
F111 B6
F112 D10
F113 B6
F114 E6
F115 B6
F117 E6
F119 B7
F120 C8
F121 B6
F122 C6
F131 D6
F132 E6
F135 D6
F136 D6
F137 A5
F138 B5
F139 C6

8204 000 8314.5

E_14620_132.eps
020704

LCD Standby Audio Panel: Standby

SA2 STANDBY

Caution: Both ⏚ and ⏚ symbols can indicate a HOT ground in this schematic!!

SA2

COLD GROUND

HOT GROUND

TO 1306 A1 LCD SUPPLY 30"/37"/42"

TO 1307 A1 LCD SUPPLY 30"/37"/42"

TO 1305 A1 LCD SUPPLY 30"/37"/42"

HOT GROUND COLD GROUND

8204 000 8314.5

E_14620_133.eps 060704

1301 B2	3508 F13	9021 B3	I191 G5	
1305 D13	3509 A7	9022 B4	I192 H9	
1306 B3	3510 F12	9023 B3	I197 C9	
1307 H4	3511 B9	9110 H10	I198 D7	
1310 A13	3512 C9	9111 D1	I199 D5	
1311 A12	3513 D10	9112 E9	I501 F7	
2101 C2	3515 B8	F100 D5	I502 F7	
2102 F2	3516 A9	F123 B4	I503 F6	
2103 D2	3517 A11	F124 B4	I504 F12	
2105 D2	3528 C11	F125 D13	I505 F13	
2107 A4	3529 C12	F126 E13	I506 F13	
2108 B4	3530 D13	F127 H4	I507 F13	
2109 F7	3531 C13	F128 H4	I508 A8	
2110 F2	3532 C12	F129 H4	I509 A9	
2111 E2	3533 D12	F130 H4	I510 A10	
2112 D4	3534 H9	F133 H8	I511 A10	
2118 D7	3535 H9	F134 H8	I512 H9	
2123 E4	3536 H10	I100 B4	I513 D1	
2124 H2	3537 H9	I101 A6		
2129 B6	3538 F8	I102 A7		
2131 C10	3539 H10	I103 C9		
2132 C11	3540 G13	I104 B10		
2140 F8	3541 G12	I105 B7		
2141 D7	3542 H13	I106 C11		
2143 D7	3544 G12	I107 C8		
2144 F2	3560 E12	I108 C9		
2145 D3	3561 F12	I109 C11		
2149 G7	3562 E12	I110 C3		
2150 G5	3999 H8	I111 C3		
2152 B4	5102 D1	I112 C10		
2153 F5	5103 E7	I113 B4		
2154 G10	5104 C5	I114 B6		
2159 D2	5105 C5	I115 C12		
2160 C9	5106 D1	I116 C10		
2162 D2	5108 D5	I117 C12		
2163 F2	5110 B6	I118 C5		
2506 C6	5112 D7	I119 C4		
2507 B7	5115 D8	I120 C6		
2508 C7	5500 B6	I121 C13		
2509 F13	5501 B4	I122 C2		
2510 E8	5504 B4	I123 C6		
2511 B9	5505 B4	I124 C5		
2512 E10	5506 E9	I125 D8		
2513 E7	5507 B9	I126 D9		
2515 B10	5508 E9	I127 C8		
2533 F11	6103 C1	I128 D7		
2534 E8	6104 D3	I129 D7		
2535 D10	6105 C4	I130 C4		
2536 D12	6106 F3	I131 C2		
2537 D13	6107 E7	I132 C4		
2538 H9	6108 F3	I133 C5		
2539 E8	6113 C7	I134 D3		
2540 H13	6114 G2	I135 D3		
2544 G13	6115 D4	I136 D2		
3100 F3	6116 F4	I137 E7		
3101 D3	6117 C3	I138 E7		
3102 D2	6118 B3	I139 E12		
3103 D2	6119 B3	I140 C1		
3104 D3	6120 G7	I141 D3		
3105 D2	6121 G7	I142 D2		
3106 E1	6122 E7	I143 D3		
3107 F1	6125 C8	I144 D2		
3108 D4	6130 B10	I145 D3		
3109 F1	6132 C10	I146 D4		
3110 F1	6133 C9	I147 E2		
3111 D2	6134 C9	I148 E10		
3112 G1	6140 D7	I149 E7		
3113 E7	6142 F3	I150 E13		
3114 F6	6144 D3	I151 E13		
3117 D3	6147 D5	I152 E12		
3122 B6	6148 F8	I153 E1		
3123 F7	6149 F9	I154 E4		
3124 F7	6150 G4	I155 E4		
3125 E3	6151 G5	I156 E4		
3126 E4	6153 H6	I157 F6		
3127 F4	6156 H5	I158 F7		
3128 F6	6504 A7	I159 F8		
3132 D9	6505 E7	I160 F8		
3134 C10	6508 G9	I161 F9		
3135 C10	6510 E13	I162 E2		
3137 D8	6511 A8	I163 F9		
3138 D3	6531 F10	I164 F7		
3140 C8	6532 C11	I165 F7		
3141 F10	6540 F12	I166 F3		
3142 F9	6562 E13	I167 F4		
3145 G2	7100 F4	I168 F9		
3146 F4	7101 D4	I169 F2		
3147 H3	7102 C4	I170 G8		
3148 E4	7105 E4	I171 F5		
3149 E4	7131 B10	I172 F2		
3150 D4	7140 F10	I173 F2		
3152 D3	7150 H6	I174 F3		
3153 C8	7501 F6	I175 F5		
3155 G5	7505 G13	I176 G7		
3156 G6	7506 C11	I177 F2		
3157 H5	7507 C12	I178 G13		
3158 G6	7508 H10	I179 G12		
3159 E8	7509 G12	I180 G5		
3160 D4	7510 F13	I181 G2		
3161 C10	7511 A8	I182 G13		
3171 C9	7512 A10	I183 G5		
3172 C10	7531 E11	I184 G6		
3175 F8	7532 D9	I185 F3		
3506 G12	9019 A8	I189 H10		
3507 F13	9020 C3	I190 G2		

LCD Standby Audio Panel: Audio

0044 F13 0045 B2 1735 F2 1736 G2 1737 F7 1738 F7 1739 F5 1M02 A9 2702 C4 2704 C3
2705 A7 2706 B4 2707 C4 2708 A3 2709 D6 2710 D6 2711 E2 2712 D5 2713 B7 2714 E4
2715 F4 2716 E4 2717 G4 2718 E3 2719 F5 2720 B3 2721 C2 2722 D2 2723 F8 2725 F6
2726 E3 2727 E3 2728 E3 2729 F3 2741 F12 2743 F13 2753 E13 2754 D11 2755 D11 2756 E11
2758 G9 2759 F8 2762 E13 2764 B3 2766 A4 2768 E5 2769 D5 2777 D2 2778 C5 2779 E3
2780 E5 2781 D5 2782 D12 2783 C7 2784 D13 2785 B13 2786 B4 2787 C5 2788 D2 2789 D2
2790 E2 2791 C7 2792 C8 2793 D13 2794 C9 2795 D12 2796 C10 2797 D8 2798 E8 2799 D13
3701 E6 3702 B6 3703 A6 3704 B6 3705 C3 3706 E6 3707 D6 3708 E6 3709 F5 3710 E4
3711 D5 3712 E3 3713 D7 3714 C6 3715 B6 3716 B6 3717 F4 3718 G4 3720 F7 3721 B2
3722 C2 3723 C2 3724 F2 3725 E3 3726 F2 3727 F5 3729 G9 3730 F7 3741 F12 3743 F4
3744 G12 3746 C6 3747 C6 3748 C5 3749 A7 3750 G3 3751 G3 3752 B8 3753 G8 3754 C8
3755 B10 3756 F4 3757 G3 3758 C10 3759 D8 3760 E8 3761 A12 3762 B12 3763 B12 3764 C12
3765 C12 3766 B14 3767 B12 3768 A13 3790 C4 3791 C3 3792 B3 3793 B4 3794 D11 3795 C5
3796 E11 3797 C5 3798 D6 5701 F4 5702 F3 5703 B5 5704 F7 5705 F6 5707 D2 5708 E2
5711 D5 5712 D5 5720 F9 5722 D13 5723 D13 5730 F2 5731 G2 5732 G8 6701 C6 6702 B12
6703 C12 6704 B6 6710 D8 6711 E8 7700 C5 7701 B7 7702 E11 7703 C7 7704 B5 7705 B6
7706 C6 7707 C5 7708 C13 7709 C13 7710 B13 7711 B13 7712 D9 7713 E9 7714 C5 7715-1 C9
7715-2 C11 9717 B5 9718 B13 F708 F2 F710 G2 F711 A2 F712 A2 F713 C3 F714 B5 F718 D10
F720 G8 F721 G2 F722 F2 F731 G8 F736 G8 F737 G6 F738 F2 F739 G6 F742 B9 F743 B9
F744 B9 F745 A9 F747 F5 F748 G5 F749 G6 F751 F6 F709 E4 F711 C4 F712 A5 F715-1 C9
F718 D10 F742 B9 1M02 A9 I700 E6 I701 E6 I702 A6 I703 B6 I704 A6 I705 D6 I706 D5
I707 D5 I708 F12 I709 E4 I710 F5 I711 C4 I712 B3 I713 E4 I714 C8 I715 A7 I716 E3
I717 B5 I718 B5 I719 E3 I720 C8 I721 C3 I722 B3 I723 B9 I724 D3 I725 E2 I726 C3
I727 B5 I728 C9 I729 C5 I730 F7 I731 B11 I732 B6 I733 C10 I734 F12 I735 D8 I736 E8
I737 C6 I738 E8 I739 C6 I740 B13 I741 E9 I742 C12 I743 C12 I744 D5 I745 B4 I746 E13
I747 D11 I748 B3 I749 C3 I750 B12 I751 A12 I752 E13 I753 B3 I754 E3 I755 F4
I756 C2 I757 D2 I758 E11 I759 E11 I760 C5 I761 F8 I762 D11 I763 C6 I764 C13
I765 D13 I766 F9 I768 E3 I769 F3 I770 G3 I771 E3 I772 F8 I773 B3 I774 E4
I776 F9 I778 E3 I779 E3 I780 E13 I781 C13 I782 C13 I783 B3 I784 B12 I785 B13
I786 B13 I787 C13 I790 F3 I791 B12 I792 B13 I793 B13 I794 B12 I795 F6 I796 C12
I797 C12 I798 E5 I799 E4

1 2 3 4 5 6 7 8 9 10 11 12 13 14

SA3 AUDIO

SA3

SA3 (3x) SA3 SA3 SA3

SA3 AUDIO-L F711 SA3 AUDIO-R F712 0045 HEATSINK

PROT1 DCPROT DCPROT AUDIO-SW PROT_AUDIOSUPPLY

TO 1M02 A4 LCD SUPPLY 42" OR TO 1M02 A2 LCD SUPPLY 30"/37"

1M02 B7B-EH-A F745 F742 F743 F744 +16V+19V -16V-19V

TDA7490 STBY-MUTE FEED4 FEED1 FEED3 FEED2 CURREF NC -VCC3 +VCC2 -VCC2 +VCC1 -VCC1 GND IN1 IN2 VREG PRE-AMP1 PRE-AMP2 INTERG1 INTERG2 OSC STAGE2 PWM BOOT1 BOOT2 OUT1 OUT2

7715-1 LM833D 7715-2 LM833D Vp Vm

7712 BC847B 7713 BC857B BZX384-C15

TDA7482 +VCCS -VCCS +VCC -VCC1 -VCC2 -VCC BOOT OUT BOOTD IN PRE PWM FEEDCAP STBY|MUTE GNDS FREQ NC VREG

BZX384-C10 BC847B BC857B BC847BW BAS316 BC847B

15W/8 R 15W/8 L B3B-PH-K PLT09H

TO 1M52 B21 SSB EMG OR TO 1M52 B1Ø SSB JAGUAR B9B-PH-K

15W/8 CENTERWOOFER B2B-PH-K

0044 HEATSINK

SOUND-ENABLE POR-CLASSD PROT_AUDIOSUPPLY AUDIO-SW AUDIO-R AUDIO-L PROT1

8204 000 8313.5

E_14620_134.eps 031104

Layout LCD Standby Audio Panel (Top Side)

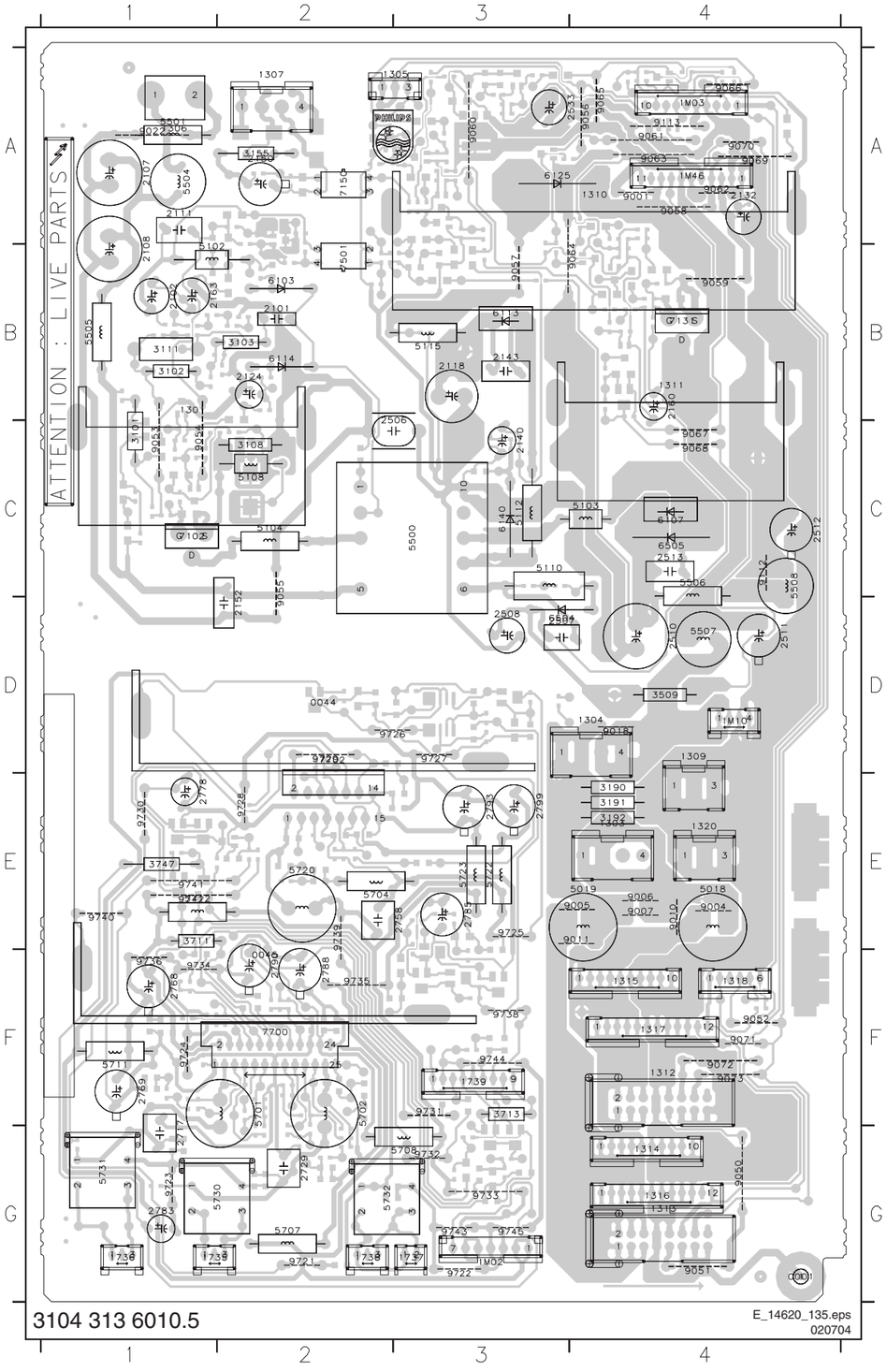

0001 G4 5507 D4
0044 D1 5508 C4
0045 E1 5701 F2
1301 B1 5702 F2
1303 E4 5704 E2
1304 D4 5707 G2
1305 A3 5708 G3
1306 A1 5711 F1
1307 A2 5712 E1
1309 D4 5720 E2
1310 A3 5722 E3
1311 B4 5723 E3
1312 F4 5730 G2
1313 G4 5731 G1
1314 G4 5732 G3
1315 F4 6103 B2
1316 G4 6107 C4
1317 F4 6113 B3
1318 F4 6114 B2
1320 E4 6125 A3
1735 G1 6140 C3
1736 G1 6504 D3
1737 G3 6505 C4
1738 G2 7102 C1
1739 F3 7131 B4
1M02 G3 7150 A2
1M03 A4 7501 B2
1M10 D4 7700 F2
1M46 A4 7702 E3
2101 B2 9001 A4
2102 B1 9004 E4
2107 A1 9005 E4
2108 A1 9006 E4
2111 A1 9007 E4
2118 B3 9010 E4
2124 B2 9011 E4
2132 A4 9018 D4
2140 C3 9022 A1
2143 B3 9050 G4
2150 A2 9051 G4
2152 D2 9052 F4
2160 B4 9053 B1
2163 B1 9054 B1
2506 B2 9055 C2
2507 D3 9056 A4
2508 D3 9057 A3
2510 D4 9058 A4
2511 D4 9059 B4
2512 C4 9060 A3
2513 C4 9061 A4
2533 A4 9062 A4
2717 F1 9063 A4
2729 G2 9064 A3
2758 E3 9065 A4
2768 F1 9066 A4
2769 F1 9067 C4
2778 E1 9068 C4
2783 G1 9069 A4
2785 E3 9070 A4
2788 F2 9071 F4
2790 E2 9072 F4
2793 E3 9073 F4
2799 E3 9112 C4
3101 B1 9113 A4
3102 B1 9721 G2
3103 B2 9722 G3
3108 C2 9723 G1
3111 B1 9724 F1
3155 A2 9725 E3
3190 E3 9726 D2
3191 E3 9727 D3
3192 E3 9728 E2
3509 D4 9729 D2
3711 F1 9730 E1
3713 F3 9731 F3
3747 E1 9732 G3
5018 E4 9733 G3
5019 E4 9734 F1
5102 B2 9735 F3
5103 C4 9736 F1
5104 C2 9738 F3
5108 C1 9739 F2
5110 C3 9740 E1
5112 C3 9741 E1
5115 B3 9742 E1
5500 C3 9743 G3
5501 A1 9744 F3
5504 A1 9745 G3
5505 B1
5506 C4

Layout LCD Standby Audio Panel (Bottom Side)

2103 B4 2149 B2 2538 A1 2710 F3 2722 G3 2756 E3 2786 F4 3104 C4 3123 B2 3140 B1 3155 A3 3190 E1 3515 B1 3536 A1 3701 F2 3712 F4 3724 G3 7704 E4
2105 B4 2153 B3 2539 A2 2711 G3 2723 E3 2759 E3 2787 E3 3105 B4 3124 B3 3141 A2 3156 A3 3191 E1 3516 B1 3537 A1 3702 G2 3713 F2 3725 F3 7705 E4
2109 B2 2154 A2 2540 A2 2712 F4 2725 F2 2762 E2 2789 F3 3106 B4 3125 A3 3142 C2 3157 A3 3192 E1 3517 B1 3538 A2 3703 G2 3714 E4 3726 G3 7706 E3
2110 B4 2159 B3 2544 A2 2713 G2 2726 G3 2764 F2 2791 F2 3107 B4 3126 A3 3145 B3 3158 A2 3506 A2 3528 A1 3539 A1 3704 G2 3715 E3 3727 F4 7707 E4
2112 C4 2162 B3 2702 F4 2714 F4 2727 G3 2766 F2 2792 D2 3109 B4 3127 B3 3146 B3 3159 B2 3507 A2 3529 B2 3540 A2 3705 F3 3716 G2 3729 G3 7708 F2
2123 C4 2509 A2 2704 F3 2715 F4 2728 F3 2777 F3 2794 D2 3110 B3 3128 B3 3147 B3 3160 C4 3508 A2 3530 A1 3541 A2 3706 G3 3717 G4 3730 E3 7709 F2
2129 C2 2515 B1 2705 G2 2716 F3 2741 D3 2779 F3 2795 E3 3112 B3 3132 B1 3148 C4 3161 B1 3509 D1 3531 A1 3542 A2 3707 F3 3718 G4 3741 D3 7710 F2
2131 A1 2534 A2 2706 F3 2718 F3 2743 E3 2780 F4 2796 D2 3113 B2 3134 A1 3149 C4 3171 B1 3510 A2 3532 A2 3544 A2 3708 F3 3720 E3 3743 G3 7711 F2
2141 C2 2535 A1 2707 F3 2719 F4 2753 D3 2781 F4 2797 D2 3114 B3 3135 A1 3150 C4 3172 A1 3511 B1 3533 B2 3560 A2 3709 F4 3721 F3 3744 E3 7712 D2
2144 A4 2536 B2 2708 F3 2720 F3 2754 E2 2782 E2 2798 D3 3117 C4 3137 B2 3152 C3 3175 C2 3512 B1 3534 A1 3561 A3 3710 F3 3722 G3 3746 G2 7713 D3
2145 C3 2537 A1 2709 G3 2721 G3 2755 E3 2784 E3 3100 A3 3122 C2 3138 C4 3153 B1 3176 A2 3513 B1 3535 A1 3562 A3 3711 E4 3723 G3 3747 E4 7714 E3
3748 F4 7715 D2
3749 E3 9002 F1
3750 G4 9003 F1
3751 G3 9008 F1
3752 D2 9009 F1
3753 G3 9019 B1
3754 D2 9020 B4
3755 D2 9021 C4
3756 G3 9023 C4
3757 G4 9074 A2
3758 D3 9110 A1
3759 D2 9111 B3
3760 D3 9717 E4
3761 F2 9718 E2
3762 F2 9737 F4
3763 E2
3764 F2
3765 E2
3766 F2
3767 E2
3768 F2
3790 F4
3791 F3
3792 F3
3793 F4
3794 E3
3795 E3
3796 E3
3797 E3
3798 G2
3999 D2
5105 C3
5106 B3
5703 F4
5705 F2
6104 C4
6105 C4
6106 A3
6108 B3
6115 C4
6116 B3
6117 B4
6118 C4
6119 C4
6120 A2
6121 B2
6122 B2
6130 B1
6132 B1
6133 B1
6134 B1
6142 B3
6144 C3
6147 C3
6148 B2
6149 A2
6150 A3
6151 A3
6153 A3
6156 A3
6508 A1
6510 A2
6511 B1
6531 A2
6532 A1
6540 A2
6562 A3
6701 G2
6702 E2
6703 F3
6704 G2
6710 D2
6711 D3
7100 A3
7101 C4
7105 B4
7140 A2
7505 A2
7506 B1
7507 A2
7508 A1
7509 A2
7510 A2
7511 B1
7512 B1
7531 A2
7532 B1
7560 A3
7701 G2
7703 G2

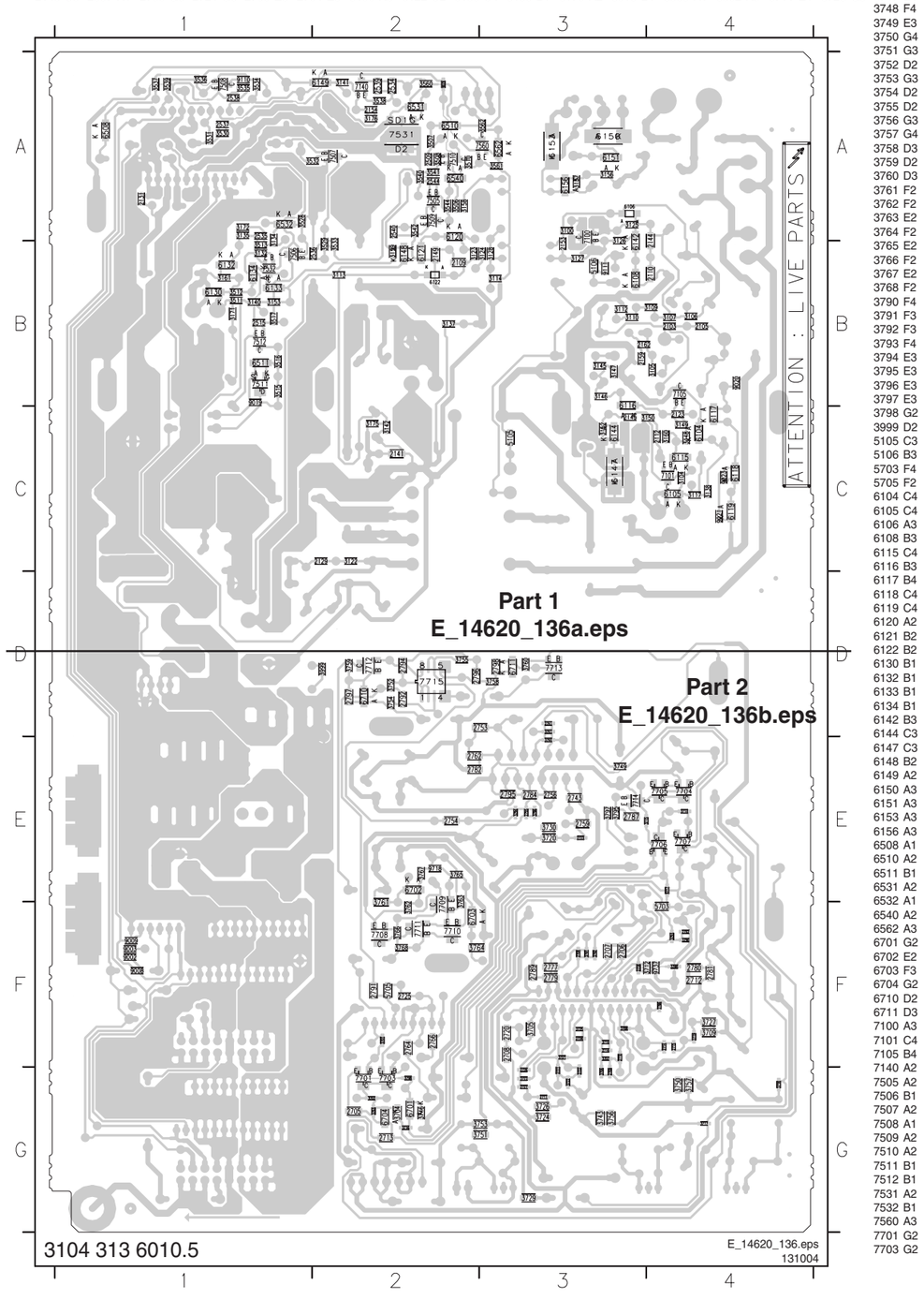

Layout LCD Standby Audio Panel (Bottom Side)

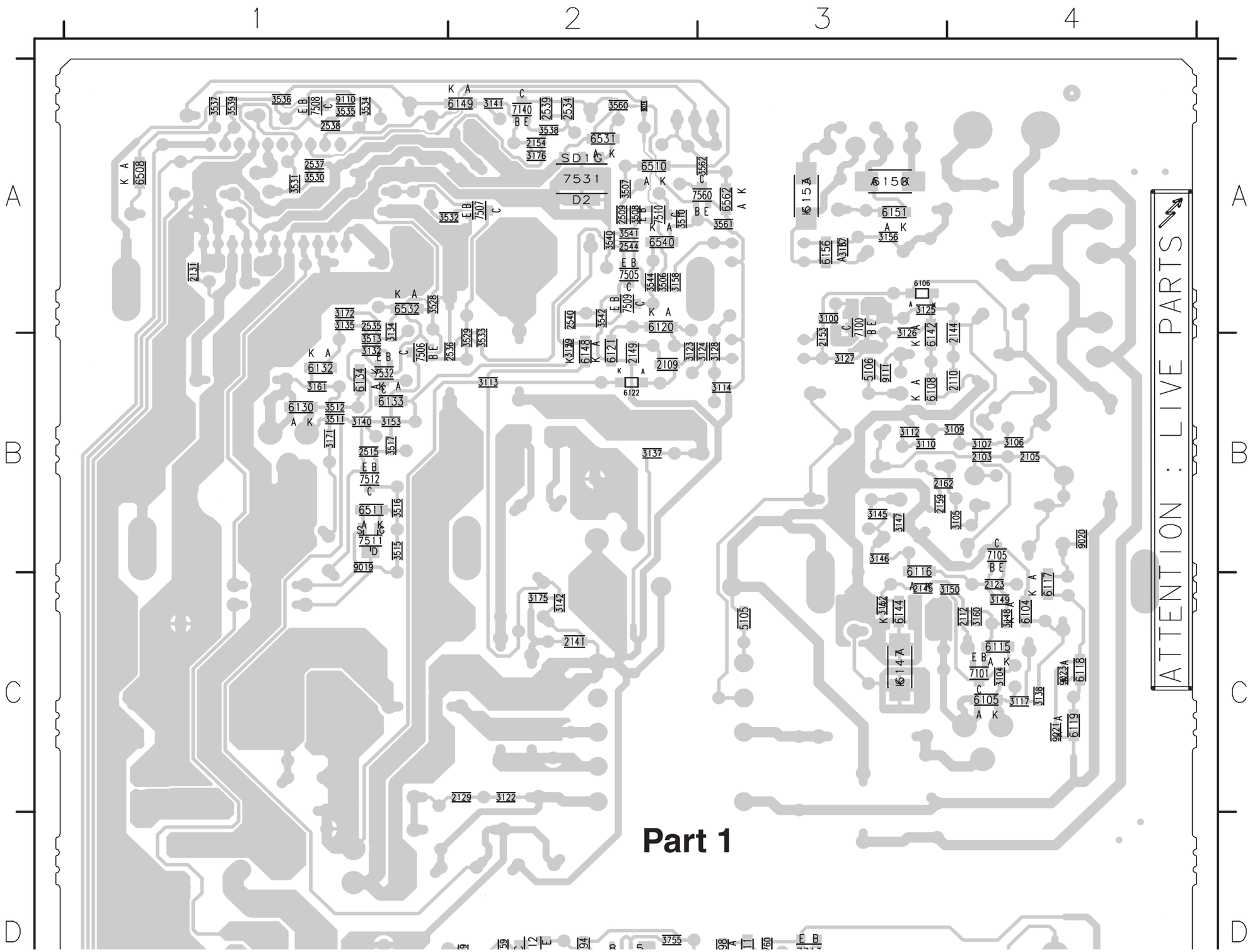

Part 1

E_14620_136a.eps
131004

Layout LCD Standby Audio Panel (Bottom Side)

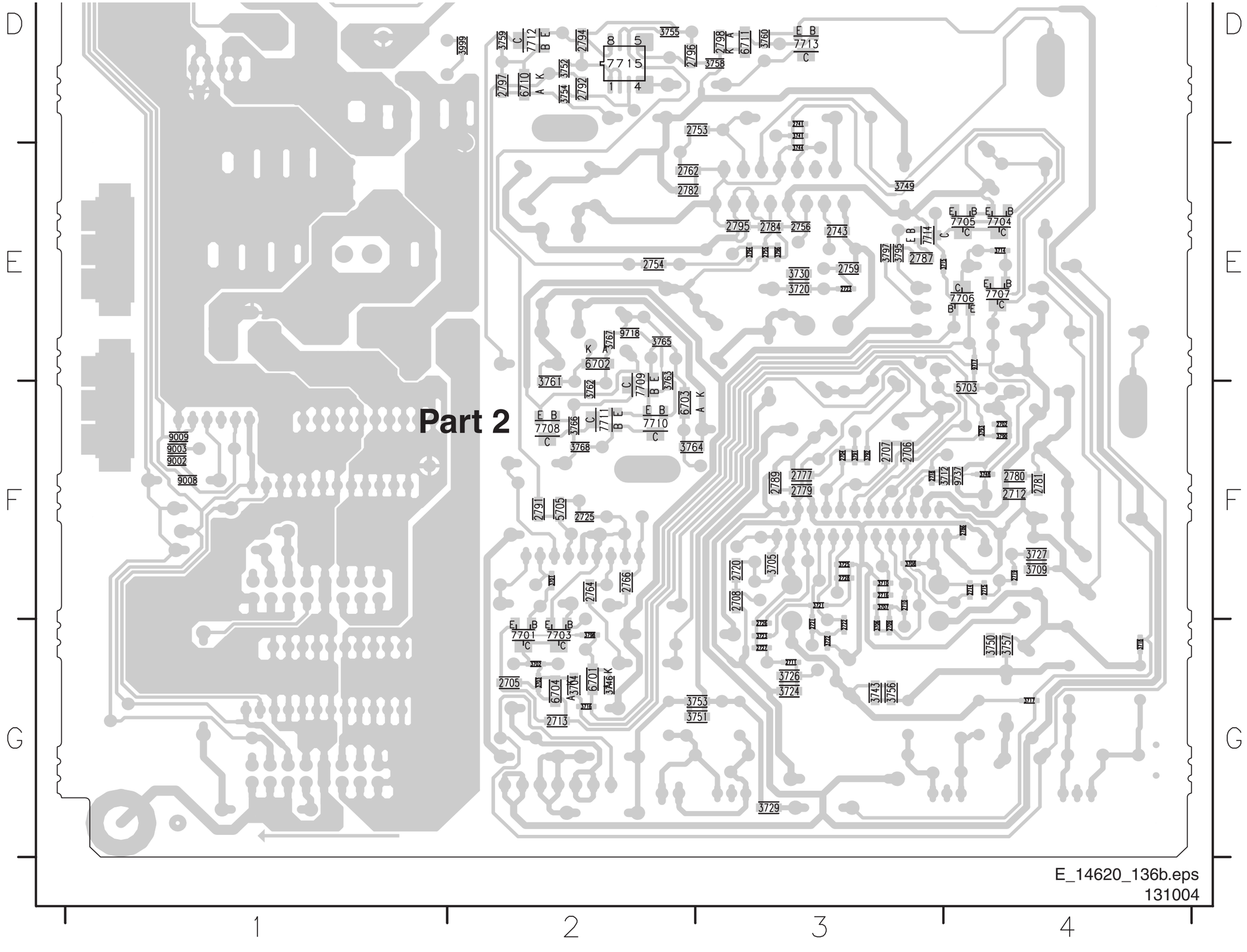

Personal Notes:

E_06532_013.eps
131004

8. Alignments

Index of this chapter:
8.1 General Alignment Conditions
8.2 Hardware Alignments
8.3 Software Alignments
8.4 Option Settings

8.1 General Alignment Conditions

8.1.1 Start Conditions

Perform all electrical adjustments under the following conditions:
- Power supply voltage (depends on region): 230 V_{AC} / 50 Hz (± 10%).
- Connect the set to the mains via an isolation transformer with low internal resistance.
- Allow the set to warm up for approximately 10 to 15 m.
- Measure voltages and waveforms in relation to chassis ground (with the exception of the voltages on the primary side of the power supply).
  Caution: never use heatsinks as ground.
- Test probe: Ri > 10 Mohm, Ci < 20 pF.
- Use an isolated trimmer/screwdriver to perform alignments.

8.1.2 Initial Settings

Perform all electrical adjustments with the following initial settings (via the "Active Control" button on the RC):
1. To avoid the working of the lightsensor, set "Active Control" to "Off".
2. Set "Smart Picture" to "Natural".

8.1.3 Alignment Sequence

- First, set the correct options:
  – In SAM, select (SERVICE) OPTIONS -> OPT. NO,
  – Fill in the option settings according to the set sticker (see also paragraph "Option Settings"),
  – Select STORE OPTIONS and push "OK" on the remote control,
  – After storing, the set must be restarted!
- Warming up (>10 minutes).
- White-D alignment.

8.2 Hardware Alignments

8.2.1 Backlight Voltage Alignment

Switch the set "on" and measure the voltage between pin 1 of connector 1304 and pin 1 of connector 1309 (ground). Align R3026 until this voltage is: 12 V_{DC} +/- 0.1 V

Caution: This voltage must be aligned very precisely: when it is too high, it can destroy the inverters. When it is too lown, the backlight will not start up.

8.3 Software Alignments

Put the set in SAM mode (see the "Service Modes, Error Codes and Fault Finding" section). The SAM menu will now appear on the screen. Select ALIGNMENTS and go to one of the sub menus. The alignments are explained below.

Notes:
- All changes must be stored manually.
- If an empty EAROM (permanent memory) is detected, all settings are set to pre-programmed default values.

8.3.1 GENERAL

For the next alignments, supply the following test signals via a video generator to the RF input:
- EU/AP-PAL models: a PAL B/G TV-signal with a signal strength of at least 1 mV and a frequency of 475.25 MHz
- US/AP-NTSC models: an NTSC M/N TV-signal with a signal strength of at least 1 mV and a frequency of 61.25 MHz (channel 3).

VG2 TEST PATTERN
Not used.

HARD CLIPPER
Not used.

CLIP GAIN
Not used.

TUNER AGC
Purpose: To keep the tuner output signal constant as the input signal amplitude varies.

Default value: “28”.

In case the default value gives problems, use the next method:
1. Set the video generator to a colour bar test pattern and a RF amplitude of 1 mV.
2. Select the channel with the test picture.
3. Measure the DC voltage on pin 1 of the (main) Tuner.
4. Adjust this voltage via TUNER AGC to just below 3.5 V.

IF PLL OFFSET
Purpose: To minimise crosstalk of video into sound.

Default value: “31”.

In case the default value gives problems, use the next method:
1. Set the video generator to a crosshatch test pattern (no sound) and a RF amplitude of 10 mV.
2. Select the channel with the test picture.
3. Listen to the audio on the loudspeakers.
4. Align the value to get minimum noise in the sound.

8.3.2 WHITEPOINT

- Set ACTIVE CONTROL to "Off".
- In the [MENU] -> PICTURE user menu set:
  – DYNAMIC CONTRAST to "Off".
  – COLOUR ENHANCEMENT to "Off".
  – COLOUR to "0".
  – CONTRAST to "100".
  – BRIGHTNESS to "37".
- Go to the SAM and select ALIGNMENTS -> WHITE POINT.

Method 1 (with colour analyser):
- Use a 100% white screen as input signal and set the following values:
  – COLOR TEMPERATURE: "Tint to be aligned".
  – All WHITE POINT values to: "127".
- Measure with a calibrated (phosphor- independent) colour analyser in the centre of the screen. Use a contactless analyser (e.g. Minolta CA-210) to align an LCD TV. The colour analyser may not touch the screen surface. Consequently, the measurement needs to be done in a dark environment.
  Note: The colour analyser needs to be calibrated for LCD!

- Adjust, by means of decreasing the value of one or two whitepoints, the correct x,y coordinates (see table "White D alignment values"). Tolerance: dx,dy: ± 0.004.
- Repeat this step for the other Colour Temperatures that need to be aligned.
- When finished press "Store" to store the aligned values to the NVM.

Table 8-1 White D alignment values

Colour Temp.	Cool	Normal	Warm
x	0.267	0.278	0.314
y	0.271	0.282	0.320

When such equipment is not available, use “method 2”.

Method 2 (without colour analyser):
If you do not have a colour analyser, you can use the default values. This is the next best solution. The default values are average values coming from production (statistics).

1. Select a COLOUR TEMPERATURE (e.g. COOL, NORMAL, or WARM).
2. Set the RED, GREEN and BLUE default values according to the values in the "Tint settings" table.
3. When finished press "Store" to store the aligned values to the NVM.

Table 8-2 Tint settings Sharp LCD

	Cool	Normal	Warm
R	119	127	127
G	127	123	108
B	126	113	65

8.4 Option Settings

8.4.1 Introduction

The microprocessor communicates with a large number of I²C ICs in the set. To ensure good communication and to make digital diagnosis possible, the microprocessor has to know which ICs to address. The presence / absence of these specific ICs (or functions) is made known by the option codes.

Notes:
- After changing the option(s), save them with the STORE command.
- The new option setting is only active after the TV is switched "off" and "on" again with the Mains switch (the EAROM is then read again).

8.4.2 DEALER OPTIONS

Table 8-3 Dealer options

Menu item	Subjects	Options	Description
Personal Options	Blue Mute	Yes	Picture (blue) mute active in case no picture detected
		No	Noise in case of no picture detected
	Virgin Mode	Yes	TV starts up (once) with language selection menu after mains switch "on" for the first time (virgin mode)
		No	TV does not starts up (once) with language selection menu after mains switch "on" for the first time (virgin mode)
	Auto Store Mode (only for EU and AP-PAL sets)	None	Autostore mode disabled (not in installation menu)
		PDC-VPS	Autostore mode via ATS (PDC/VPS) enabled
		TXT page	Autostore mode via ACI enabled
		PDC-VPS-TXT	Autostore mode via ACI or ATS enabled
	TXT Preference (only for EU and AP-PAL sets)	TOP	Preference to TOP Teletext
		FLOF	Preference to FLOF Teletext

8.4.3 (SERVICE) OPTIONS

Select the sub menu's to set the initialisation codes (options) of the set via text menus.

Table 8-4 Service options

Menu-item	Subjects	Options	Description
Teletext	Flash RAM	Yes / No	Flash RAM present / not present
	NexTView type	None	Feature not present
		Textguide only	Feature present, but only as text guide
		NexTView 2c3	Feature present, for countries that support NexTView
Display	Display type	LCD / PDP / LCOS / PTV	Used display technology
	Display Size	30” / 32” / 32” / 42”	Screen size
	Display Resolution	Hor. x Vert. pixels	Resolution of the used display
Video Repro	Lightsensor	Yes / No	Feature present / not present
	Combfilter	3D Combfilter	Only selectable when Columbus is present
	Picture Processing	None	
	Signalling Bits		

Menu-item	Subjects	Options	Description
Source	HDMI 1	Yes / No	Connector present / not present
	HDMI 2	Yes / No	Connector present / not present
	EXT3	Yes / No	Connector present / not present
	USB	1 USB / 2 USB	1 USB connector present / 2 USB connectors present
Audio Repro	Dolby		
	Rear Speakers	Cordless Off	
	Subw. Internal Present	Yes / No	Feature present / not present
	Subw. External Present	Yes / No	Feature present / not present
	Acoustic System	None	Cabinet design
		Entry	Cabinet design
		FTV_3.1 STEP	Cabinet design (WRAP design)
		FTV_4.1 TOP	Cabinet design (with NXT speakers)
	Nr. SPDIF inputs	SPDIF input 1	
Opt. no.	Group 1		00144 04610 01043 08200 (see set sticker)
	Group 2		00528 00000 12327 00000 (see set sticker)

8.4.4 OPT. NO. (Option numbers)

Select this sub menu to set all options at once (expressed in two long strings of numbers).
An option number (or "option byte") represents a number of different options. When you change these numbers directly, you can set all options very quickly. All options are controlled via eight option numbers.
When the EAROM is replaced, all options will require resetting. To be certain that the factory settings are reproduced exactly, you must set both option number lines. You can find the correct option numbers on a sticker inside the TV set.

Example: The options sticker gives the following option numbers:
- 00144 04610 01043 08200
- 00528 00000 12327 00000

The first line (group 1) indicates options 1 to 4, the second line (group 2) options 5 to 8.
Every 5-digit number represents 16 bits (so the maximum value will be 65536 if all options are set).
When all the correct options are set, the sum of the decimal values of each Option Byte (OB) will give the option number.

Note: *As the info was not up-to-date at the time of writing, the option number explanation is not given in this manual. As soon it becomes available, a Service Info or update manual will be send via the appropriate channels.*

9. Circuit Descriptions, Abbreviation List, and IC Data Sheets

Index of this chapter:

9.1 Introduction
9.2 Power Supply
9.3 Inputs
9.4 MPIF (PNX 3000)
9.5 AVIP (PNX 2000)
9.6 COLUMBUS (Comb Filter)
9.7 VIPER II (PNX 8550)
9.8 LVDS Transmitter
9.9 Stand-by Controller
9.10 Abbreviation list
9.11 IC Data Sheets

Notes:

- Only **new** circuits (circuits that are not published recently) are described.
- Figures can deviate slightly from the actual situation, due to different set executions.
- For a good understanding of the following circuit descriptions, please use the wiring, block (chapter 6) and circuit diagrams (chapter 7). Where necessary, you will find a separate drawing for clarification.

9.1 Introduction

The FTL3.1 is a new global TV chassis, specifically developed for Matrix Displays.
The key components are: MPIF, AVIP, and VIPER 2.
Additionally a COLUMBUS 3D Comb filter can be used.
The chassis will be used in High-end LCD and Plasma TV sets.

9.1.1 Features

The main drivers for this chassis are:

- Global architecture fit for all regions and all display types, with main focus on matrix displays, but also fit for LCOS and PTV applications.
- Large scale function integration in the key components itself.
- Fit for both analogue and digital signal processing, this by converting analogue signals into digital transport streams and allowing seamless zapping between all possible signal sources. This makes the chassis applicable for e.g. receiving ATSC and DTV in an integrated product form.
- The internal digital processing allows new "Multi-Media" applications such as Content Browser, Memory Card Slot, Local Area Network support and all kinds of streaming applications.
- The chassis can be upgraded in the future with internal functionality such as Personal Video Recording, DVD-RW.
- From signal processing via "hardware circuits" to signal processing via "software algorithms".

9.1.2 Chassis Block Diagram

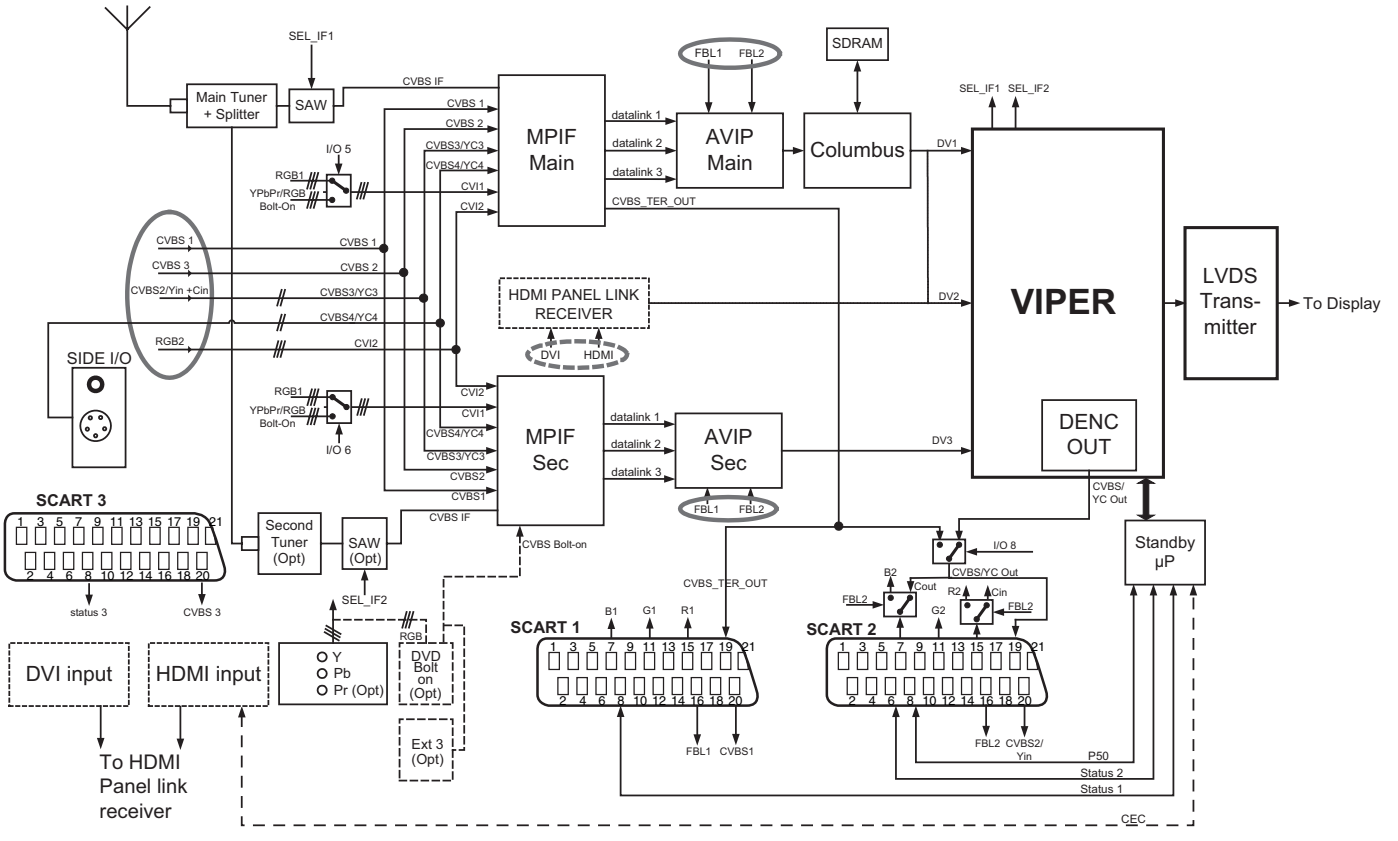

E_14700_080.eps
021104

Figure 9-1 Chassis Block Diagram

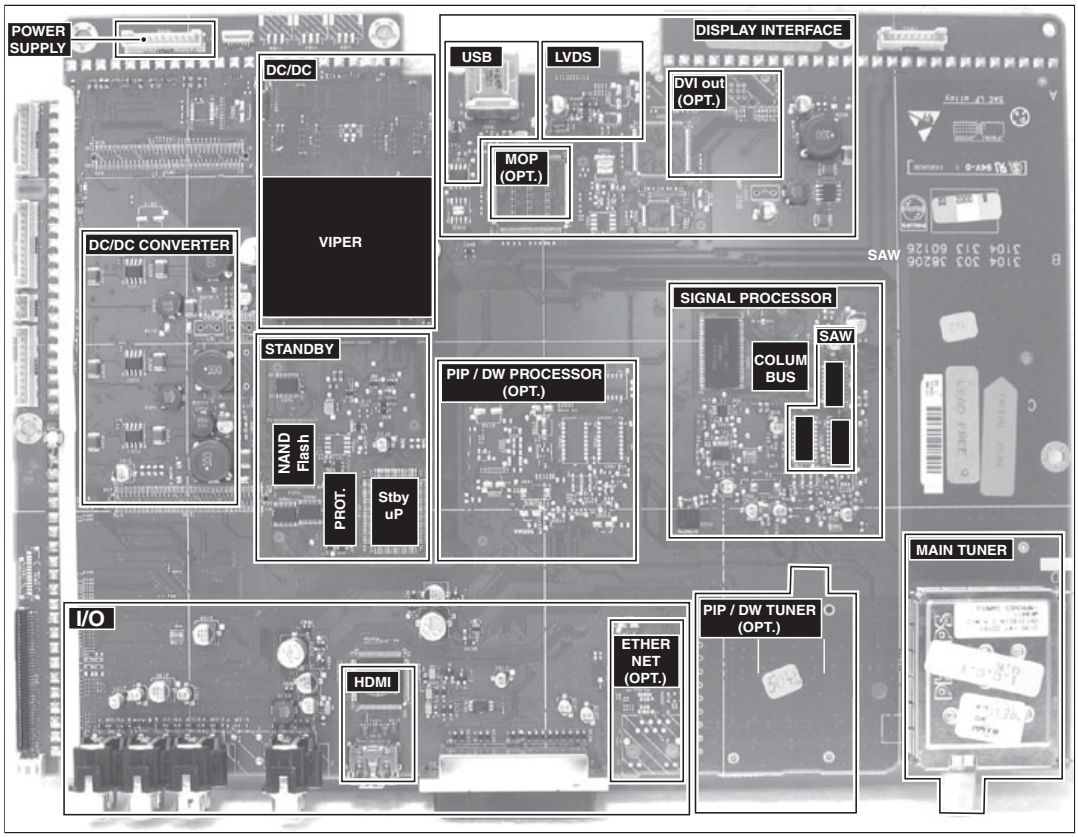

E_14700_079.eps
121104

Figure 9-2 SSB top view

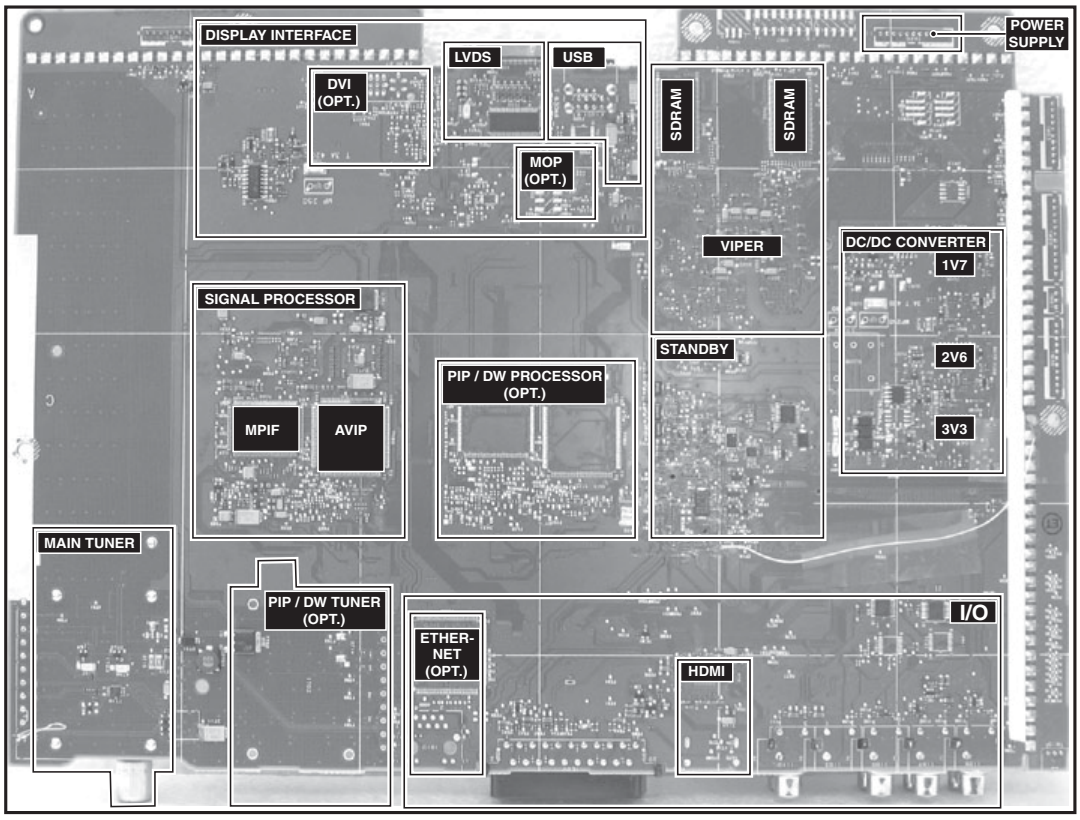

E_14700_078.eps
091104

Figure 9-3 SSB bottom view

9.2 Power Supply

9.2.1 Introduction

The MF (Mains Filter) Supply is the main power supply for this chassis. It is the same supply as used in the FTL2.x chassis, therefore it is not described in this chapter. Please refer to the FTL2.1 manual (order code 3122 785 14620).
As the VIPER and many other ICs on the SSB require low supply voltages at high current (a few Amperes), onboard DC/DC converters are implemented. There are three DC/DC converters on the board, which all use the 12VS line as input:
- 1.2V converter.
- 2.8V/2.5V converter.
- 3.3V converter.

9.2.2 Block Diagram

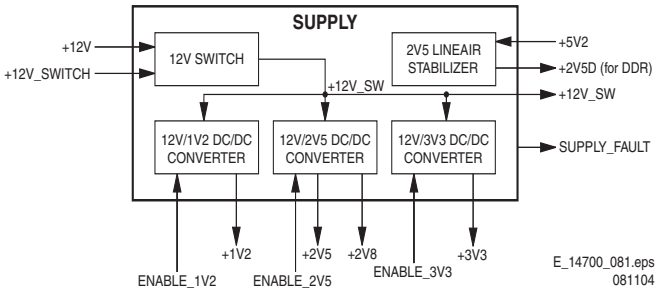

Figure 9-4 DC/DC converter block diagram

Besides these three DC/DC converters the DC/DC layout cell also has a:
- 12VS switch (to provide +12VSW out of the 12VS, when the 12V_SWITCH line goes low (Stand-by Microprocessor controlled).
- +2.5VD linear stabiliser (from +5V2).

Start-up sequence
1. Apply +5V and +12VS together with other supply voltages needed by the Stand-by Microprocessor to begin the start-up sequence; the voltage +2V5D should be +2.5 V ± 5%.
2. The +12VSW should be enabled by the 12V_SWITCH signal (active "low") from the Stand-by Microprocessor.
3. The DC/DC converters are activated by their enable signals driven by the Stand-by Microprocessor in this order:
   1. +1V2 (+1.26 V ± 4%, enabled by ENABLE_1V2).
   2. +2V5 and +2V8 (+2.65 V ± 4% and +2.95 V ± 10%, enabled by ENABLE_2V5).
   3. +3V3 (+3.4 V ± 4% enabled by ENABLE_3V3).

Control LEDs on the SSB light up when the +1V2, +2V8 (+2V5), +2V5D, and +3V3 are available.
The signal SUPPLY_FAULT must be "high" (> 2 V) when all DC/DC converters are working properly. The signal is becoming active ("low") when there is a defective or missing component in any of the three DC/DC converters or if the output voltages are short-circuited to ground. In this last case, the Stand-by Microprocessor stops the converters.

Driver
The L69100 is a PWM controller for high performance DC/DC conversion. The oscillator switching frequency pin is connected to ground via an external resistor (100 kohm) so the external frequency is increased to about 250 kHz.
The Soft Start time is programmed by an external capacitor between pin SS and GND and is loaded via the internal 10 A current generator. This pin (SS) is also used to disable the driver IC by forcing a voltage lower than 0.4 V.
For all the drivers, the VREF and EAREF pins are connected together, so the internal 900 mV reference is used and the output voltage is measured and adjusted by an external voltage divider, connected to VFB.
The over-current threshold is set with a resistor connected to pin OCSET and the upper MOSFET Drain.
High peak-current gate drivers provide for fast switching to the external power section, and the output current can be in excess of 20 A.
The device assures protections against load over-current and over-voltage. An internal crowbar is also provided, turning "on" the low side MOSFET as long as the over-voltage is detected. In case of over-current detection, the soft start capacitor SS is discharged and the system works in Hiccup mode.
Pin PGOOD is an open collector output and it is pulled "low" if the output voltage is not within the specified thresholds.

9.3 Inputs

9.3.1 USB/Memory Card

The USB1.1 is a hardware block in the VIPER. There are two USB 1.1 ports. Each port has a D+ and D- line; this is the differential signal path for USB. There is also one OVER_CURRENT_DETECT and POWER_ENABLE line that is used for both ports (these lines are controlled by VIPER).
A tandem USB connector is mounted on the SSB, on which you can connect two USB devices; one device will be the SCM digital media card-reader. Only USB mass storage class device is supported, so other USB devices (card-readers) have to be compliant with this class.

Each USB port has four lines:
- 5V (red).
- D- (white).
- D+ (green).
- GND (black).

The host (= SSB) needs to provide the power supply to the attached devices (like memory cards or other USB devices). Since it is not known what the customer will attach (e.g. a USB hub with multiple USB devices), and these USB devices draw current from the SSB, these supply lines must be protected against over-current and/or too many connected devices. This is controlled by the VIPER via the USB_OVERCUR line (see diagram 6A): when more then 500mA/channel is drawn from the USB ports, the protection becomes active (= "high").

During stand-by, when there is no +5V available (and VIPER is not active), the USB port does not work. This is controlled by the VIPER via the USB_BUS_PW line (see diagram 6A), which switches the 5V input to the outputs of IC7001.

9.3.2 HDMI

Introduction
Note: Text below is a summary from the ”HDMI Specification” that is issued by the HDMI founders (see *http://www.hdmi.org*).

This High-Definition Multimedia Interface is developed for transmitting digital television audiovisual signals from DVD players, set-top boxes and other audiovisual sources to television sets, projectors and other video displays.
HDMI can carry high quality multi-channel audio data and can carry all standard and high-definition consumer electronics video formats. Content protection technology is available. HDMI can also carry control and status information in both directions.

As shown in the HDMI block diagram, the HDMI connector carries four differential pairs that make up the TMDS (Transition Minimised Differential Signalling) data and clock channels. These channels are used to carry video, audio, and auxiliary data. In addition, HDMI carries a VESA DDC channel.

The DDC is used for configuration and status exchange between a single source device and a single sink device.

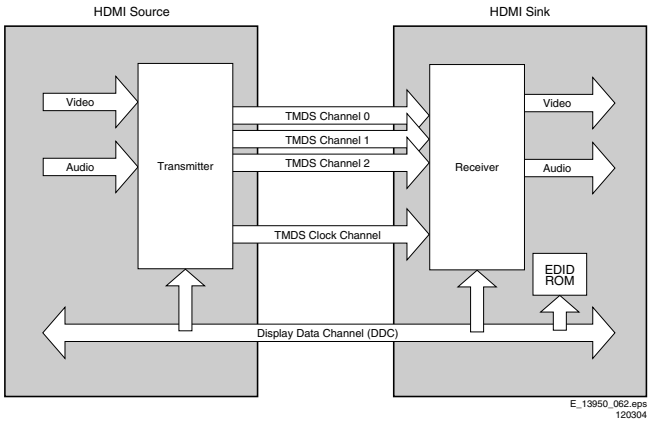

Figure 9-5 HDMI block diagram

Audio, video, and auxiliary data is transmitted across the three TMDS data channels. The video pixel clock is transmitted on the TMDS clock channel and is used by the receiver as a frequency reference for data recovery on the three TMDS data channels.
Video data is carried as a series of 24-bit pixels on the three TMDS data channels. TMDS encoding, converts the 8 bits per channel into the 10 bit DC-balanced transition minimized sequence, which is then transmitted serially across the pair at a rate of 10 bits per pixel clock period.
Video pixel rates can range from 25 MHz to 165 MHz. Video formats with rates below 25 MHz (e.g. 13.5 MHz for 480i/NTSC) can be transmitted using a pixel-repetition scheme. The video pixels can be encoded in either RGB, YCBCR 4:4:4, or YCBCR 4:2:2 formats. In all three cases, up to 24 bits per pixel can be transferred.
In order to transmit audio and auxiliary data across the TMDS channels, HDMI uses a packet structure. In order to attain the higher reliability required of audio and control data, this data is protected with a BCH error correction code and is encoded using a special error reduction coding to produce the 10-bit word that is transmitted.
Basic audio functionality consists of a single IEC 60958 audio stream at sample rates of 32 kHz, 44.1 kHz, or 48 kHz. This can accommodate any normal stereo stream. Optionally, HDMI can carry a single such stream at sample rates up to 192 kHz or from two to four such streams (3 to 8 audio channels) at sample rates up to 96 kHz. HDMI can also carry IEC 61937 compressed (e.g. surround-sound) stream at sample rates up to 192 kHz.
The DDC is used by the source to read the sink's Enhanced Extended Display Identification Data (E-EDID) in order to discover the sink's configuration and/or capabilities.

HDMI is backward compatible with DVI (1.0). Compared with DVI, HDMI offers:
- YUV 4:4:4 (3 x 8-bit) or 4:2:2 (up to 2 x 12-bit).
- Digital audio in CD quality (16-bit, 32/44.1/48 kHz), higher quality available (8 channels, 192 kHz).
- Remote control via CEC bus (Consumer Electronics Control): allows user to control all HDMI devices with the TV's remote control and menus.
- Smaller connector (SCART successor).
- Less cables: e.g. from 10 audio/9 video cables to 3 HDMI cables.

Implementation
The main task for the Panel Link Cinema SiI9993 is scaling of the inputs to an appropriate format for the VIPER II input (two main transport streams and one sub transport stream).

The Panel Link Cinema SiI9993 incorporates an extremely flexible audio and video interface. An integrated colour space converter provides full backward compatibility with DVI devices. With both digital and analogue video (RGB/YPbPr) output, the SiI9993 easily fits into existing DTV architectures. An S/PDIF port outputs either 2-channel PCM audio or encoded data such as Dolby Digital and DTS. An I2S port outputs PCM data to low-cost audio DACs.

Each SiI9993 comes pre-programmed with unique HDCP (High-bandwidth Digital Content Protection) keys, providing the highest level of security. The HDCP protocol requires values to be exchanged between the video transmitter and video receiver. These values are exchanged over the DDC channel of the HDMI/DVI interface. The E-DDC channel follows the I^2C serial protocol. The SiI9993 is the video receiver and will have a connection to the E-DDC bus with a slave address. It decrypts both video and audio.

Some features:
- HDMI 1.0 and DVI 1.0 compliant receiver
- Integrated Panel Link core supports DTV resolutions (480i/576i/480p/576p/720p/1080i)
- Digital video interface supports video processors:
  - 24-bit RGB 4:4:4.
  - 24-bit YCbCr 4:4:4.
  - 16/20/24-bit YCbCr 4:2:2.
  - 8/10/12-bit YCbCr 4:2:2 (ITU.656).
- Analogue RGB and YPbPr output:
  - 10-Bit DAC.
  - Separate or Composite Syncs (Sync on Y)
- S/PDIF output supports PCM, Dolby Digital, DTS digital audio transmission (32 - 48 kHz f_s) using IEC 60958 and IEC 61937.
- Programmable I2S interface for connection to low-cost audio DACs.
- Integrated HDCP decryption engine for receiving protected audio and video content.
- Pre-programmed HDCP keys provide highest level of key security, simplifies manufacturing.
- Programmable registers via slave I^2C interface.
- 3.3V operation in 100-pin TQFP package.
- Power management.

9.4 MPIF (PNX 3000)

9.4.1 Introduction

The MPIF (Multi Platform InterFace, type number PNX3000, item number 7100) is an analogue video and audio pre-processing unit for the AVIP TV processor. It contains the high frequent IF part and all the analogue video and audio source switching for external in- and outputs. The MPIF can handle CVBS, Y/C, RGB (1fH/2fH) and YPbPr (1fH/2fH) video signals as well as stereo, I2S, and second sound IF audio signals. The MPIF converts the selected video and audio streams from the analogue to the digital domain. Via three high-speed serial data links (I2D), the digitised audio and video signals are streamed (594 Mbit/s) to the AVIP IC for further processing.
The MPIF uses a clock coming from the AVIP of 13.5 MHz and is I^2C driven. The supply voltage for the MPIF is 5V.

The MPIF uses the following input signals:
- CVBS, Y/C, YPbPr, or RGB video format.
- 1fH or 2fH video.
- Clock 13.5 MHz from the AVIP.
- I^2C from the VIPER.
- Clamping-pulse from the AVIP.

9.4.2 Block diagram

Following figure shows the MPIF block diagram:

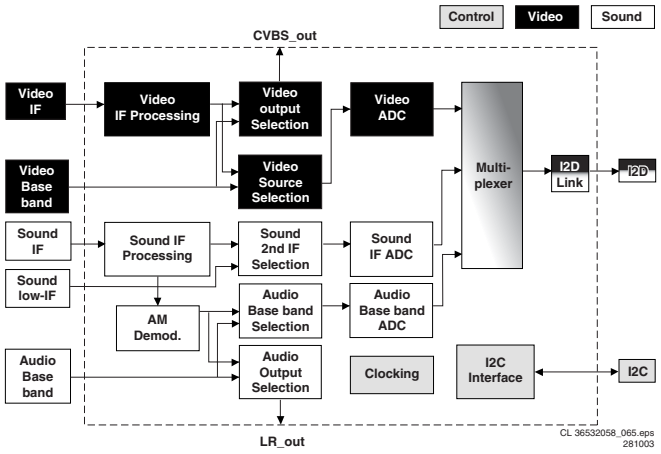

Figure 9-6 MPIF block diagram

9.4.3 IF Processing

The MPIF is capable of demodulation of RF signals.

Analogue Vision IF Processing

Some specifications:

- Synchronous demodulation of the IF vision carrier. Selectable frequency and auto-calibration of the VCO (Voltage controlled oscillator).
- Group delay correction for BG system.
- AGC at vision IF level to give fixed CVBS output level, and AGC at RF level (tuner AGC) to limit output level of the tuner.
- AGC gating for bad reception conditions.
- CVBS amplitude correction and mute.
- Detections for AFC and video presence.

The video signal is demodulated by means of an alignment-free PLL carrier regenerator with an internal VCO. This VCO is calibrated by means of a digital control circuit, which uses an external crystal frequency as reference. The frequency setting for the various standards (33.4, 33.9, 38.0, 38.9, 45.75 and 58.75 MHz) is realised via the I^2C bus.
The AFC output is generated by the digital control circuit of the IF-PLL demodulator and can be read via the I^2C bus.
The AGC-detector operates on "top sync" or "top white" level.
The MPIF IC has an integrated sound trap filter. The trap frequencies can be switched via the I^2C-bus.
Also, a group delay correction filter is integrated. The filter can be switched between the PAL BG curve and a flat group delay response characteristic. This has the advantage that in multi-standard receivers the video SAW filter does not need to be switchable (cost effective).

Analogue Sound IF Processing

Some specifications:

- A switch to select QSS or inter-carrier mode.
- Sound carrier frequency conversion at second IF sound frequency (SSIF)
- A switch to select internal or external SSIF.
- AGC at sound IF level (for QSS (quasi-split-sound) mode) and AGC at SSIF level (for inter-carrier and QSS modes).
- Demodulation of AM modulated carrier (L and L' standards).

The MPIF has a separate sound IF input to enable Quasi Split Sound (QSS) applications. The sound IF amplifier is similar to the vision IF amplifier and has a gain control range of about 55 dB.
The AGC detector measures the SIF carrier levels (average level of AM or FM carriers) and ensures a constant signal amplitude for the AM demodulator and QSS mixer.

For applications without SIF SAW filter, the IC can also be used in intercarrier mode. In this mode, the composite video signal from the VIF amplifier is fed to the QSS mixer and converted to the intercarrier frequency. AM sound demodulation is realised in the analogue domain with the QSS mixer.

9.4.4 Source Selection

Below the main functions and features of the main blocks in the MPIF for video and audio are explained.

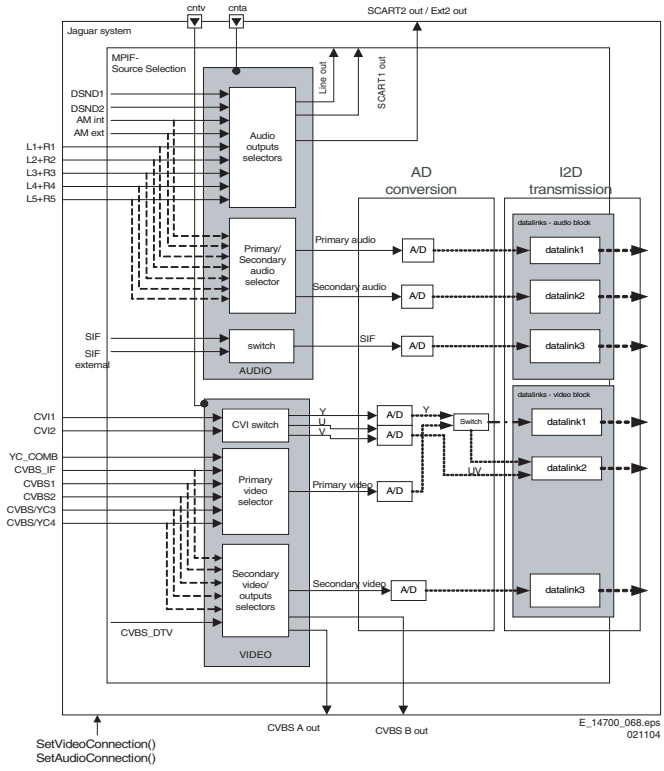

Figure 9-7 MPIF analogue source selection block

Video selectors

The CVI switch (Composite Video Input, including RGB, YUV, and YPbPr) is selecting the signal from one of the two CVI inputs; the output is always a YUV signal.
The primary video selector is selecting a signal from the CVBS and YC inputs; the video coding of the output signal equals to the video coding of the input signal.
The primary video selector has an extra input (YC_COMB), capable of selecting an Y/C signal from the comb filter. This input cannot be downscaled to a CVBS signal and fed back to the CVBS_A or CVBS_B output. It is also advisable not to connect other sources to the YC_COMB input because it is treated as an internal one that is not available for the outside world.
Two video output selectors are responsible for the contents of CVBS_A and CVBS_B video out.

Audio selectors

The primary audio selector is selecting a signal from five external stereo inputs and one stereo input that handles two mono signals (AM internal and AM external). The AM internal signal is demodulated in the IF part and is internally routed, so not available as external input. Additionally, the AM internal signal is available on the left channel whereas the AM external signal is available on the right channel.
The secondary audio selector is selecting a signal from the same range as the primary audio selector; the second audio selector can work in stereo or mono mode. In case the stereo mode is selected, it is alike the primary audio selector. In mono mode, the input stereo signal L+R is transformed into a mono signal (L+R)/2 and put on the left channel of the stereo output.

When the stereo input (handling two mono signals) is selected and the selector works in mono mode, the AMint and AMext can be swapped on the primary as well as on the secondary audio channel. It is also possible to digitise the mono + AM on the secondary audio channel.
Further it is possible to select the AM signal on the analogue audio outputs independently from the AM signal that is selected for the secondary (digital) audio channel.
Three audio output selectors are responsible for the content of the Line, SCART1, and SCART2 outputs. These selectors allow selection of the output out of five L+R inputs, two mono signals (AM internal or AM external) and two externally connected DSND streams.

SIF switching
SIF (Sound Intermediate Frequency) switching allows selecting between internal or external SIF signals.

AD Converters
The second part of the MPIF is responsible for conversion of the chosen signals into digital signals and grouping them into three data streams. Each data stream handles both video and audio. These data streams are fed into three data links and send via I2D to the outside.

The MPIF contains four video ADCs for analogue and digital video broadcast signals. The clock frequency for these ADCs is either 27 MHz or 54 MHz. In some cases, two analogue signals are multiplexed at the input of one ADC. In these cases, the clock frequency of the ADCs is 54 MHz, while the sample frequency for each of the two signals is 27 MHz.

The sample frequency for standard 1fH video signals is 27 MHz. For the YUV channel the sample frequency of the U and V components is half the sample frequency of the Y signal. For 2fH YPbPr or RGB input signals (for instance 480p or 1080i ATSC signals), the frequency that is used to sample the YUV signals is twice as high as for 1fH signals. The sample frequency is 54 MHz for Y and 27 MHz for U and V.
Due to the high sample frequency, two data links are needed for transport of the video data to the digital video processor.

I2D data link
The digital interface between MPIF and AVIP is called Data Link (or I2D Link). Data Link is a pin efficient, EMC friendly and power efficient serial interface that transfers the data from MPIF to AVIP over three Data Link interfaces. Each Data Link has a data signal and a strobe signal. The synchronisation information is distributed over the data and the strobe signal. To minimise EMC, both signal outputs are low voltage differential swing signals, with a swing of about 300 mV. Each Data Link has four lines, one differential pair for the data, and one differential pair for the strobe. The data rate is 594 Mbit/s. Each Data Link can carry two 27 MHz sampled video streams (or one 54 MHz sampled 2fH video stream) and two audio channels sampled at 6.75 MHz.

In the MPIF, the (video and audio) data to be transmitted is multiplexed in an output register of 42 bits. The content of that 42 bits register is serial transmitted on one of the three data links. In the AVIP, the serial data is de-multiplexed into parallel streams. The data on the data link is divided in several groups of signals (video, audio and strobe signals). Obvious it is important that the transmitter and receiver are in the same transmitting mode

Data links can operate in two different modes called:
1. Normal mode.
2. YUV2fH.

Normal mode
In the normal mode the content of the data links is as follows:

Data Stream	Video	Audio
1	CVBS/YC primary	(L+R) primary
2	YUV 1fH	(L+R) secondary
3	CVBS secondary	SIF
Data link Mode bit: DM= 0		

In the normal mode the data links can handle up to three video signals: CVBS or YC signal from the primary video selector, CVI 1fH source selected on the CVI switch, and CVBS signal from the secondary video selector.

YUV 2fH mode
In the YUV 2fH mode (higher bandwidth signal) the data links content is as follows:

Data Stream	Video	Audio
1	Y 2fH	(L+R) primary
2	UV 2fH	(L+R) secondary
3	CVBS secondary	SIF
Data link Mode bit: DM= 1		

The data link 1 can output only one of two input signals: the output of the primary video selector or the Y output of the CVI switch. Only one can be active at a moment, and that is determined by the data link mode bit (DM). It means, that for data links working in YUV 2fH mode, the data link 1 carries the Y component of the YUV 2fH signal, the data link 2 carries the UV component, and the data link 3 contains the signal that is connected through the secondary video selector.

9.5 AVIP (PNX 2000)

9.5.1 Introduction

The AVIP receives the digital data via the I2D link (coming from MPIF). It reformats this data and maps (synchronises) the data to the clock of the AVIP. Then a digital AGC is passed. After this, the video decoding is performed in the VIDDEC-block of the AVIP. The decoded video is sent to an output block, which formats the data to an ITU-656 compatible standard data stream.
The AVIP power supply is 1.8 V and 3.3 V. It uses a clock of 13.5 MHz coming from the VIPER. The AVIP is I^2C driven. Initialisation of this IC begins with a hard reset (MIPS-RESET) provided by the VIPER. Besides video decoding, the AVIP is also used for decoding and presentation of all audio output streams in the system.

9.5.2 Block Diagrams

Below the main functions and features in the AVIP for video and audio are given.

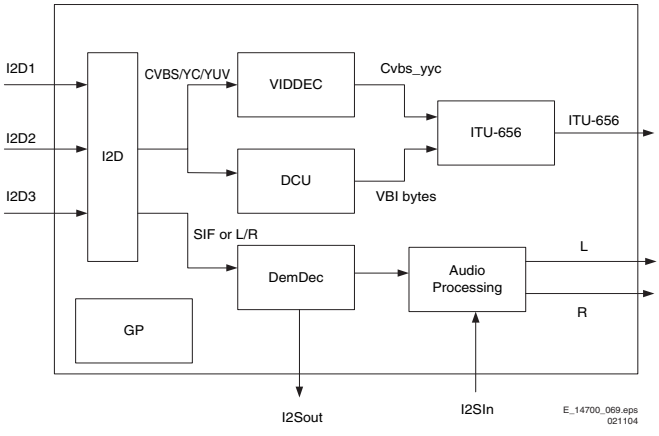

Figure 9-8 AVIP block diagram

Main AVIP function:
- I2D receiver.
- Colour decoding into ITU-601compatible format (1fH/2fH).
- Interface with 3D comb filter (called Columbus in this chassis).
- VBI data capture (Teletext, ...).
- ITU-656 formatting.
- Audio demodulation and decoding.
- Audio processing and D/A conversion.

I2D Receiver

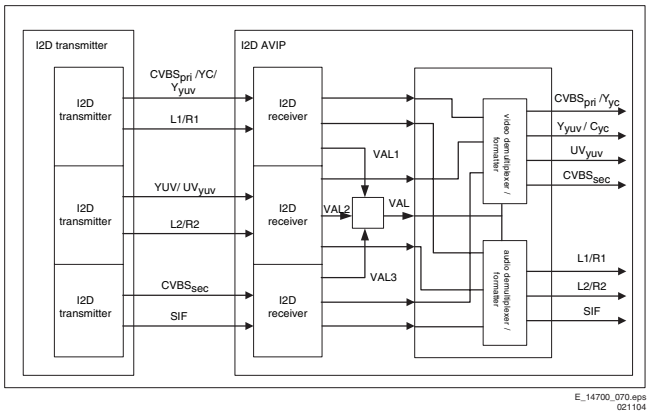

Figure 9-9 I2D receiver block diagram

The receiver block gets the serial data stream and converts it to a parallel stream. This parallel data is fed to the "de-multiplexer and formatter " block where the selected audio/ video stream is forwarded to the video and audio decoder for further processing. This communication bus is completely digital and very difficult to monitor. It is however possible to check the correct functioning of the I2D link via the DRND-bits.

The I2D link has the following characteristics.
- The data-link runs at 297 MHz / 594 Mbps.
- The driver rise/fall time is around 200 ps.
- The data-link uses differential signals.

VIDDEC (Video Decoder)

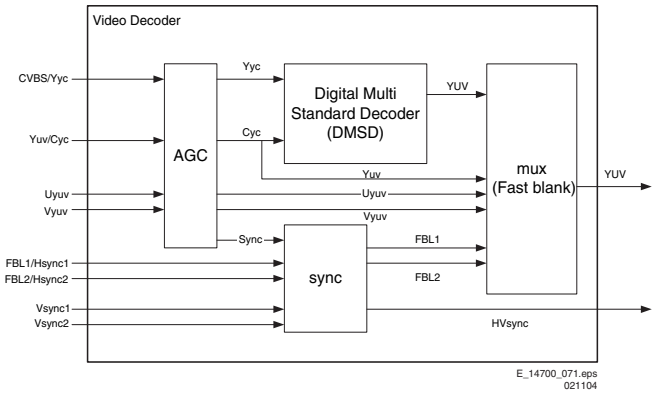

Figure 9-10 VIDDEC block diagram

The CVBS/YC/YUV signals (coming from the I2D receiver block) enter the DMSD block (Digital Multi Standard Decoder) via the AGC (Automatic Gain Control) block. The multiplexer block (MUX) takes care of the correct output signal. The sync signals are processed in the sync block.

The VIDDEC has the following main functions:
- Multi standard colour decoder.
- Automatic system recognition.
- Fully programmable static or automatic (AGC) for all analogue video base band signals.
- AGC on sync amplitude in digital domain.
- Selectable peak white control.
- AGC for chrominance (PAL and NTSC only).
- Programmable Luminance and Chrominance bandwidth for CVBS and Y/C sources.
- Programmable clamp window for the selected video base band signals.
- Digital PLL for synchronisation on 2fH and ATSC standards.
- Horizontal (including 3-level sync for 2fH) and vertical sync detection.
- Automatic detection of 50/60Hz ATSC field frequency.
- Adaptive 2/4-line delay comb filter for two-dimensional Chrominance/Luminance separation.
- Copy protected source detection according to MacroVision up to version 7.01
- Possibility of RGB insertion through fast blanking in CVBS input mode, not in Y/C.

DCU (Data Capturing Unit)

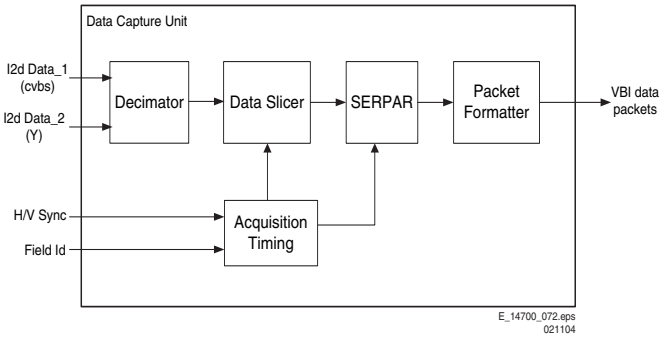

Figure 9-11 DCU block diagram

The purpose of this block is to acquire digital data (containing Teletext, Closed Captions, ...) from a CVBS/Y/C video input source. It performs processing on the received data and provides the data to the ITU-656 formatter unit.
The decimator reduces the sample rate (from 27 MHz to 13.5 MHz) of the incoming digitised CVBS or Y data stream from the I2D receiver. From the video input, the data slicer reconstructs the transmitted bit stream and associated clock. The SERPAR block converts the serial bits, coming from the data slicer, into parallel bytes. The packet processor performs data decoding and some error correction, assembles received bytes into packet structure, and streams out the data to the ITU-656 formatter.
The acquisition-timing block locks onto sync signals, and provides timing information to the other blocks of the data capture unit.

ITU656 Output Formatter

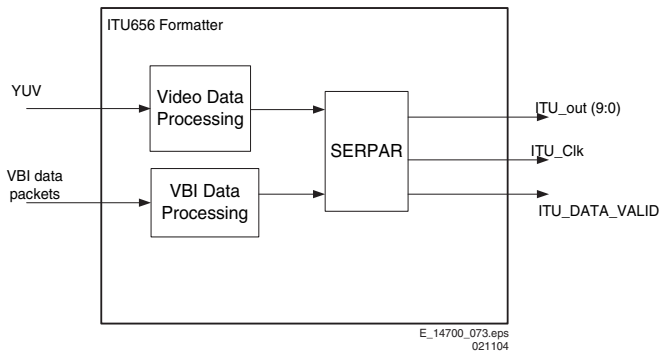

Figure 9-12 ITU656 formatter block diagram

The ITU656 formatter gets YUV data as video input signal, coming from the VIDDEC block. These YUV data are either decoded CVBS signals, matrixed RGB signals, or YUV input signals. The second input data are VBI sliced data coming from

the DCU. The output of the ITU delivers a data stream, which is ITU-601/656/1364 compliant with exception of the CRC and the data valid line and includes video as well as the VBI data.

DEMDEC (Demodulator and Decoder)

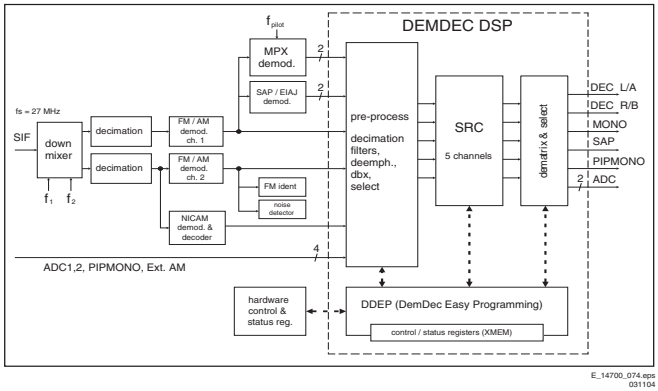

Figure 9-13 DEMDEC block diagram

The demodulator and decoder (DEMDEC) is responsible for demodulating and decoding incoming SIF signals.

The main features of the DEMDEC are:
- Demodulator and Decoder Easy Programming (DDEP).
- Auto standard detection (ASD).
- Static Standard Selection (SSS).
- DQPSK demodulation for different standards, simultaneously with 1-channel demodulation.
- NICAM decoding (B/G, I, D/K, and L standard).
- Two-carrier multi standard FM demodulation (B/G, D/K and M standard).
- Decoding for three analogue multi-channel systems (A2, A2+ and A2*) and satellite sound.
- Adaptive de-emphasis for satellite FM.
- Optional AM demodulation for system L, simultaneously with NICAM.
- Identification A2 systems (B/G, D/K and M standard) with different identification time constants.
- FM pilot carrier present detector.
- Monitor selection for FM/AM DC values and signals, with peak and quasi detection option.
- BTSC MPX decoder.
- SAP decoder.
- dBx noise reduction.
- Japan (EIAJ) decoder.
- FM radio decoder.
- Soft mute for DEMDEC outputs DEC, MONO, and SAP.
- FM over modulation adaptation option to avoid clipping and distortion.
- Sample rate conversion (SRC) for up to three demodulated terrestrial audio signals. It is possible to process SCART signals together with demodulated terrestrial signals.

Audio Processing

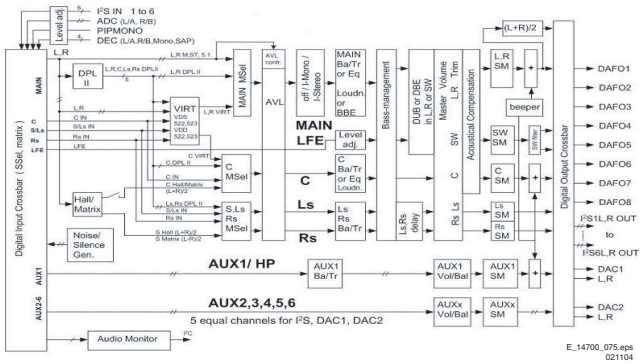

Figure 9-14 Audio processing block diagram

Main features are:
- Automatic Volume Level (AVL) control.
- Smooth volume control.
- Master volume control and Balance.
- Soft mute.
- Loudness.
- Bass, Treble.
- Dynamic Bass Enhancement (DBE).
- Dynamic Ultra Bass (DUBII).
- Non-processed subwoofer.
- 5-band equalizer.
- Acoustical compensation.
- Programmable beeper.
- Noise generator for loudspeaker level trimming.
- Pseudo hall/matrix function.
- Dolby ProLogic delay.
- Incredible Mono.
- Incredible Stereo.
- Virtual Dolby Surround (VDS 522, 523).
- Virtual Dolby Digital (VDD 522, 523).
- Bass Redirection according to Dolby specifications.
- Digital crossbar switch for all digital signal sources and destinations.
- Output crossbar for exchange of channel processing functionality.
- Digital audio input interface (stereo I2S input interface).
- Digital audio output interface (stereo I2S output interface).
- Voice recognition output interface (stereo I2S output interface).
- Audio monitor for level detection.
- 8 audio DACs for six channel loudspeaker outputs and stereo headphones output.
- Audio DACs for stereo SCART output and stereo LINE output.
- Serial data link interface for interfacing with the analogue multi-purpose interface IC PNX3000 (MPIF).

9.6 COLUMBUS (Comb Filter)

9.6.1 Introduction

The COLUMBUS (Colour Luminance Baseband Universal Subsystem) is a 2D/3D COMBFILTER.

COLUMBUS feature overview:
- 2D/3D Comb filter for PAL and NTSC.
- Spatial/Temporal Noise reduction.
- Dual Noise meter.
- Demo mode (horizontal split screen) for all features separately.
- ITU-656 style input and output.
- I^2C interface.
- SNERT interface.
- Boundary Scan Test interface.
- Full 9-Bit processing.
- Internal test pattern for Service/Debugging purposes.

For a detailed description of the COLUMBUS, please refer to the EM5.3E manual (order code 3122 785 14600).

9.6.2 Block Diagram

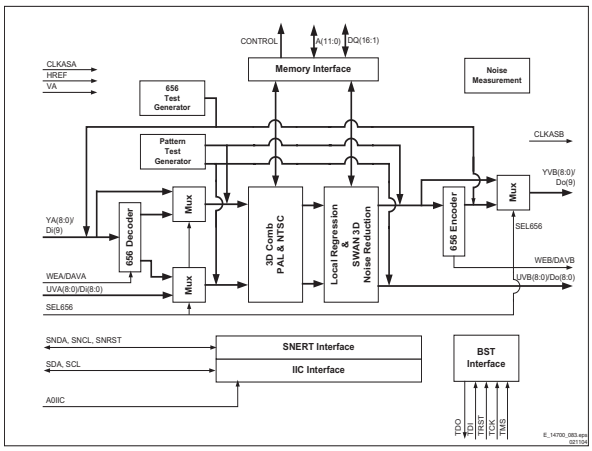

Figure 9-15 COLUMBUS internal block diagram

Memory Interface
In figure "COLUMBUS-Memory Interface", the interface is given between the COLUMBUS and the 16MBit SDRAM (for 3D comb filtering). If CLKSEL is connected to ground, the internal clock/PLL of the COLUMBUS is used. If CLKSEL is connected to VDD an external clock must be applied through the CLKEXT pin.

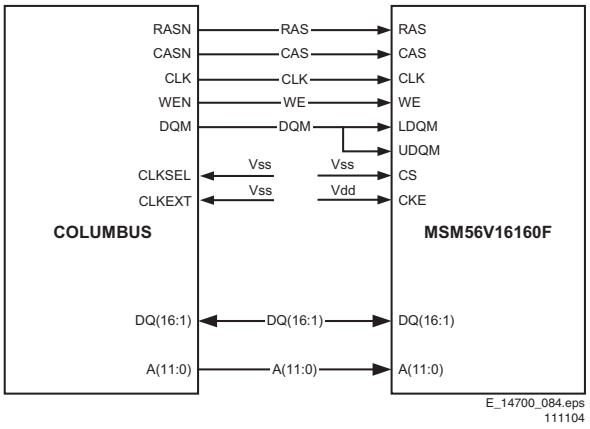

Figure 9-16 COLUMBUS-Memory Interface

AVIP and VIPER Interface
In figure "COLUMBUS-AVIP/VIPER interface", the interface is sketched in an AVIP/VIPER environment. The not used inputs from the Columbus can be connected to VSS or VDDS. The SEL656 pin must be active "high" (tied to VDDS).

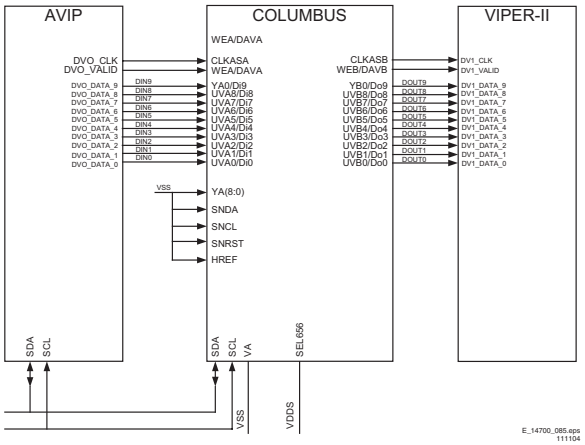

Figure 9-17 COLUMBUS-AVIP/VIPER interface

The SEL656 pin is connected to VDDS (= 1), so the ITU656 interface is selected for interfacing to AVIP and VIPER.

Control Register Interface
The control registers are accessed either via IIC. Most signals that can be written via I^2C are double buffered. The Fast I^2C interface implemented on the COLUMBUS is a 5V compliant, 400 kHz slave receiver/transmitter. The I^2C will not be blocked during voltage shorts or opens.

For the system dependent parameters of the 3D-Comb filter, five register banks are present. Data can be written in one of the banks via I^2C, by programming bits [2:0] of the SYSTEM_SELECT register. The bits [6:4] of the SYSTEM_SELECT register select, which register bank is used by Columbus to define the filter settings.

Bank number	System
0	PAL B, G, H, I, D, K
1	PAL M
2	PAL N
3	NTSC
4	Bypass

Digital identification ID
Presence and version of the device can be checked by reading the digital identification ID using the I^2C interface.

Internal test generators (see block diagram)
There are two test generators inside the COLUMBUS chip:
- The "656 test generator" generates a 656 compliant stream and is used for testing the functionality of the 656 encoder and decoder. The 656 stream can be injected at the front end or the back end of the chip.
- A second internal test pattern generator enables testing of the device and attached external memory (if present). The test pattern generator signal can be inserted at the front end of the chip (passing through the 3D Comb and noise reduction system and external memory) or at the back end of the chip. Test patterns are available for both PAL/ SECAM and NTSC systems.

9.7 VIPER II (PNX 8550)

9.7.1 Introduction

The PNX8550 is a highly integrated media processor intended for deployment in analogue, digital and hybrid TV receivers. It can be used for 100 Hz interlaced as well as 60 Hz progressive screens. It is fully capable of performing advanced video improvement algorithms, such as Digital Natural Motion™, on Standard Definition analogue or digital sources. It includes an HD capable de-interlacer for converting interlaced HD transmission signals to progressive output for driving wide-XGA class Plasma or LCD displays. Two 32-bit 240 MHz VLIW media processors, referred to as the TriMedia TM3260 CPU core, carry out the advanced video improvement processing as well as all audio operations. Fixed hardware functions perform stable core video functions, such as picture level MPEG2 decoding, scaling, image composition and pixel post processing.

The PNX8550 provides a primary digital (YUV or RGB) output to connect to the display specific output processor. In addition, a secondary analogue video output (CVBS or S-Video) for a VCR is available. This is the so-called DENC-out. It can operate either in analogue PAL/NTSC or digital mode.

9.7.2 Block Diagram

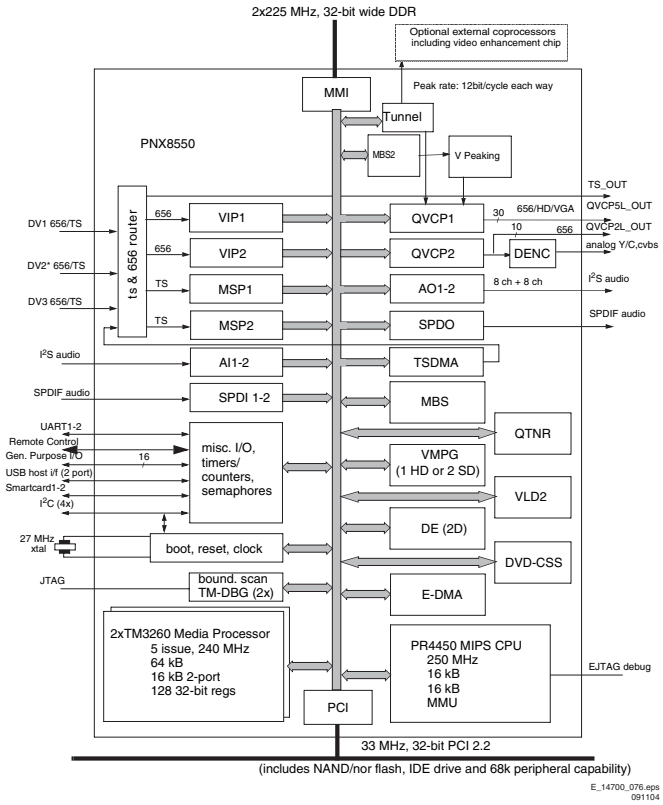

Figure 9-18 VIPER II internal block diagram

Control
An embedded MIPS32 processor (PR4450) running at 266 MHz is available to run the Operating System. The PR4450 processor is primarily responsible for running the demand paged graphics-intensive operating system, while the TM3260 media processors are responsible for running all real-time media functions. All hardware resources inside the PNX8550 are accessible by both the MIPS processor and the TM3260 CPUs. A "'sandbox" style system protection provision ensures that selected MIPS memory regions and critical peripherals cannot be corrupted or inspected.

VIP (Video Input Processor)
The Video Input Processors (VIP) handles incoming digital video and processes it for use by other components of the PNX8550. It provides the following functions:
- Receives 10-bit YUV4:2:2 digital video data from the selected DVx video port (input signal coming from the AVIP or Columbus IC output). The data is dithered down to in-memory 8-bit data format.
- Performs horizontal down scaling or up scaling by 2x (not available in HD video capture mode).
- Provides an internal Test Pattern Generator with NTSC, PAL, and variable format support.
- Acquire VBI data using a separate acquisition window from the video acquisition window.
- ANC header decoding or window mode for VBI data extraction.
- Interrupt generation for VBI or video written to memory input mode.
- Colour space conversion (mutual exclusive with horizontal scaling).
- Raw data mode captures of 8- or 10-bit data.

MBS (Memory Based Scaler)
The PNX8550 contains a Memory Based Scaler that performs operation on images in main memory. The MBS can either be controlled task by task by a TM3260, or it can be given a list of de-interlacing and scaling tasks. It reads images from memory, performs a transformation, and writes the result back in memory.

The MBS main features are:
- De-interlacing using either a median, 2-field majority select, or 3-field majority select algorithm with an edge detect/correct post-pass (these three provide increasing quality, at expense of increased bandwidth).
- Edge detect/correct on an input frame that has been software de-interlaced (this provides future capabilities in case we develop a better core de-interlacer than 3-field majority select).
- Horizontal and vertical scaling (on the input image, or on the result of edge detect/correct stage).
- Linear and non-linear aspect ratio conversion.
- Anti-flicker filtering.
- Conversions from any input pixel format to any non-indexed pixel format, including conversions between 4:2:0, 4:2:2 and 4:4:4, indexed to true colour conversion, colour expansion / compression, de-planarisation / planarisation (to convert between planar and packed pixel formats), programmable colour space conversion.

Supported video measurement functions during scaling or de-interlacing pass:
- Gather a histogram of luminance values (this data is used by software to control histogram modification).
- Measure noise level inside a rectangular window.
- Measure the lowest level luminance within a rectangular window (used to control black stretch in QVCP).
- Measure UV bandwidth inside a rectangular window.

QTNR (Quality Temporal Noise Reduction and Video Measurement)
The QTNR block has two primary functions: Temporal Noise Reduction: reading two video fields from memory, "current" (noisy) and "previous" (noise reduced) and producing a noise-reduced version of "current" in memory. While doing this, or as a separate "measurement only" pass, perform video measurements:
- Gather a histogram of luminance values (this data is used by software to control histogram modification).
- Measure noise level inside a rectangular window.
- Measure the lowest level luminance within a rectangular window (used to control black stretch in QVCP).
- Measure UV bandwidth inside a rectangular window.
- Measure the position of top and bottom black bars in the image.

QVCP (Quality Video Composition Processor)
The PNX8550 contains two QVCPs, which are responsible for combining and displaying video and graphics images from main memory. The primary QVCP serves as the main display pipeline, the second one is targeted to be connected to a record device (VCR). The primary QVCP allows composition of up to five layers, and can output in ITU-656/HD/VGA format in 10 bits per component up to 81 Mpix/s.

The secondary QVCP allows composition of up to two layers, can output in 656 10-bit component mode up to 81 MHz (40.5 Mpix/s). The secondary QVCP is connected to an on-chip Digital Video Encoder (DENC), allowing direct analogue CVBS or S-video output.
In analogue output mode, standard definition interlaced NTSC or PAL is supported (SCART2-out signal, for VCR-recording). The encoder has two DACs. DAC1 provides CVBS or luminance for S-video. DAC2 provides chrominance for S-video.
Internal sensors allow software to test loading on the S-video Chrominance line to decide whether to output luminance or CVBS on DAC1.

The primary and secondary QVCP each contain a series of layers and mixers. The QVCP creates a series of display data layers (pixel streams) and mixes them logically from back to front to create the composite output picture.

Some of the features the QVCP provides are:
- Video Quality Enhancement.
- Luminance Transient Improvement.
- Colour Dependent Sharpening.
- Horizontal Dynamic Peaking.
- Histogram Modification.
- Digital Colour Transient Improvement.
- Black Stretch.
- Skin Tone Correction.
- Blue Stretch and Green Enhancement.
- Video and Graphics horizontal up scaling.
- Colour space unification of all the display surfaces.
- Contrast and Brightness Control.
- Positioning of the various surfaces.
- Merging of the image surfaces (alpha blending and pixel selection based on chroma range keying).
- Gamma correction on the merged result.
- Screen timing generation adopted to the connected display requirements (SD-TV standards, HD-TV standards, progressive, interlaced formats).

9.8 LVDS Transmitter

The digital video output from the VIPER is connected to the display via an LVDS interface. This transmitter converts 28 bits of LVCMOS/LVTTL data into four LVDS (Low Voltage Differential Signalling) data streams. A phase-locked transmit clock is transmitted in parallel with the data streams over a fifth LVDS link. With every cycle of the transmit clock, 28 bits of input data are sampled and transmitted. At a transmit clock frequency of 85 MHz, 24 bits of RGB data and 3 bits of LCD timing and control data (FPLINE, FPFRAME, DRDY) are transmitted at a rate of 595 Mbps per LVDS data channel. Using a 85 MHz clock, the data throughput is 297.5 Mbytes/sec.

9.9 Stand-by Controller

9.9.1 Introduction

The main reason to use a Stand-by Controller was the high (> 1 Watt) power consumption in stand-by of the VIPER II IC.

The main tasks of the Stand-by Controller are:
- RC5/RC6 remote control handling.
- P50.
- Keyboard handling (Top Control, ON/OFF switch).
- Status detection on SCARTs.
- Detection and protection of the power supplies.
- SAM/SDM entering.
- Provide boot-scripts to the VIPER.
- Start-up behaviour of the set (sequentially enabling the power supplies).

9.9.2 Block Diagram

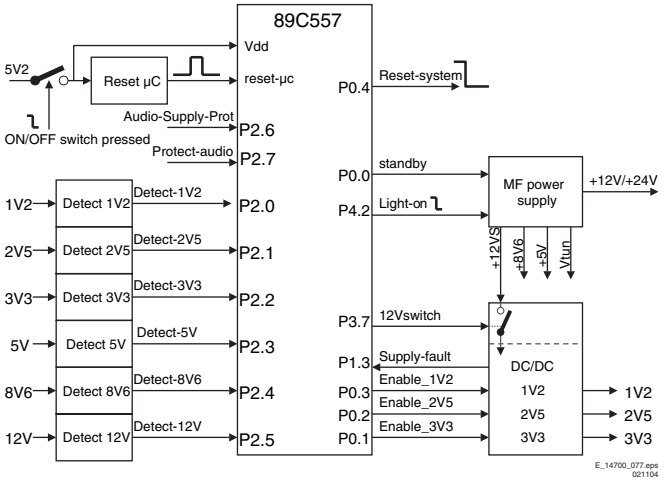

Figure 9-19 Stand-by processor block diagram

The Stand-by Controller is powered by the 5V2 voltage that becomes available when the user has pressed the ON/OFF switch. At that moment, it gets a RESET pulse and starts running. It needs a 16 MHz crystal oscillation to do so. By default all I/O lines of the controller are high, this state is also the state that will not trigger protections or cause supplies to rise, since enabling a supply requires that an I/O line is pulled "low". Also all protections are active "low".

9.9.3 Start-up Behaviour and Fault Detection

The Stand-by Microprocessor is responsible for the start-up of the VIPER, by providing the correct timing for the DC/DC converted voltages (for timing of DC/DC converter voltages see description in paragraph "Power Supply").
The +12V switch and the DC/DC converters are switched "on", via the enable line (active "low"). Once these voltages are switched "on", the Stand-by Controller is monitoring these voltages via a voltage detector circuit connected to port P2.x. When one of the voltages is missing, the fault detection will be active "low" on port P2.x. An error code will be written in the error buffer.
There is a common supply fault line; connected to port P1.3 (INT5) that is active "low" when there is a problem detected on one of the DC/DC power supplies driver circuits.
Two inputs (P2.6 and P2.7) are used for the Audio Supply protection and the DC protection from the audio amplifier.
The RESET_SYSTEM line is "low" in Stand-by and at Start-up to keep the VIPER in reset state. Once the VIPER core supply is available, the RESET_SYSTEM line will become "high". The VIPER is starting up and will provide a RESET-MIPS active "high" to the Stand-by Processor P3.3 (INT1), AVIP, and COLUMBUS.

9.9.4 I/O Stand-by processor

The inputs on the Stand-by Microprocessor are used to detect the AV status from the SCART or front inputs (see also the control block diagram in chapter 6 "Block diagrams,...").
An UART communication line via an electronic switch is available on a connector and will be used for Service to communicate with ComPair. The UART line is switched to the Stand-by Processor when the UART switch line is "high".

9.10 Abbreviation list

0/6/12	SCART switch control signal on A/V board. 0 = loop through (AUX to TV), 6 = play 16:9 format, 12 = play 4:3 format
2DNR	Spatial (2D) Noise Reduction
3DNR	Temporal (3D) Noise Reduction
AARA	Automatic Aspect Ratio Adaptation: algorithm that adapts aspect ratio to remove horizontal black bars; keeps the original aspect ratio
ACI	Automatic Channel Installation: algorithm that installs TV channels directly from a cable network by means of a predefined TXT page
ADC	Analogue to Digital Converter
AFC	Automatic Frequency Control: control signal used to tune to the correct frequency
AGC	Automatic Gain Control: algorithm that controls the video input of the feature box
AM	Amplitude Modulation
ANR	Automatic Noise Reduction: one of the algorithms of Auto TV
AP	Asia Pacific
AR	Aspect Ratio: 4 by 3 or 16 by 9
ASF	Auto Screen Fit: algorithm that adapts aspect ratio to remove horizontal black bars without discarding video information
ATSC	Advanced Television Systems Committee, the digital TV standard in the USA
ATV	See Auto TV
Auto TV	A hardware and software control system that measures picture content, and adapts image parameters in a dynamic way
AV	External Audio Video
B/G	Monochrome TV system. Sound carrier distance is 5.5 MHz
BTSC	Broadcast Television Standard Committee. Multiplex FM stereo sound system, originating from the USA and used e.g. in LATAM and AP-NTSC countries
B-TXT	Blue TeleteXT
C	Centre channel (audio)
CEC	Consumer Electronics Control bus: remote control bus on HDMI connections
CL	Constant Level: audio output to connect with an external amplifier
COLUMBUS	COlour LUMinance Baseband Universal Sub-system
ComPair	Computer aided rePair
CSM	Customer Service Mode
CTI	Colour Transient Improvement: manipulates steepness of chroma transients
CVBS	Composite Video Blanking and Synchronization
DAC	Digital to Analogue Converter
DBE	Dynamic Bass Enhancement: extra low frequency amplification
DDC	See "E-DDC"
D/K	Monochrome TV system. Sound carrier distance is 6.5 MHz
DFU	Directions For Use: owner's manual
DNR	Digital Noise Reduction: noise reduction feature of the set
DRAM	Dynamic RAM
DSP	Digital Signal Processing
DST	Dealer Service Tool: special remote control designed for service technicians
DVD	Digital Versatile Disc
DVI(-d)	Digital Visual Interface (d= digital only)
E-DDC	Enhanced Display Data Channel (VESA standard for communication channel and display). Using E-DDC, the video source can read the EDID information form the display.
EDID	Extended Display Identification Data (VESA standard)
EEPROM	Electrically Erasable and Programmable Read Only Memory
EMI	Electro Magnetic Interference
EPLD	Erasable Programmable Logic Device
EU	Europe
EXT	EXTernal (source), entering the set by SCART or by cinches (jacks)
FBL	Fast BLanking: DC signal accompanying RGB signals
FDS	Full Dual Screen (same as FDW)
FDW	Full Dual Window (same as FDS)
FLASH	FLASH memory
FM	Field Memory or Frequency Modulation
FTV	Flat TeleVision
Gb/s	Giga bits per second
G-TXT	Green TeleteXT
H	H_sync to the module
HD	High Definition
HDD	Hard Disk Drive
HDCP	High-bandwidth Digital Content Protection: A "key" encoded into the HDMI/DVI signal that prevents video data piracy. If a source is HDCP coded and connected via HDMI/DVI without the proper HDCP decoding, the picture is put into a "snow vision" mode or changed to a low resolution. For normal content distribution the source and the display device must be enabled for HDCP "software key" decoding.
HDMI	High Definition Multimedia Interface
HP	HeadPhone
I	Monochrome TV system. Sound carrier distance is 6.0 MHz
I2C	Integrated IC bus
I2D	Integrated IC Data bus
I2S	Integrated IC Sound bus
IF	Intermediate Frequency
Interlaced	Scan mode where two fields are used to form one frame. Each field contains half the number of the total amount of lines. The fields are written in "pairs", causing line flicker.
IR	Infra Red
IRQ	Interrupt Request
ITU-656	The ITU Radiocommunication Sector (ITU-R) is a standards body subcommittee of the International Telecommunication Union relating to radio communication. ITU-656 (a.k.a. SDI), is a digitised video format used for broadcast grade video. Uncompressed digital component or digital composite signals can be used. The SDI signal is self-synchronizing, uses 8 bit or 10 bit data words, and has a maximum data rate of 270 Mbit/s, with a minimum bandwidth of 135 MHz.

ITV	Institutional TeleVision, TV sets for hotels, hospitals etc.
Last Status	The settings last chosen by the customer and read and stored in RAM or in the NVM. They are called at start-up of the set to configure it according to the customer's preferences
LATAM	Latin America
LCD	Liquid Crystal Display
LED	Light Emitting Diode
L/L'	Monochrome TV system. Sound carrier distance is 6.5 MHz. L' is Band I, L is all bands except for Band I
LS	Loudspeaker
LVDS	Low Voltage Differential Signalling
Mbps	Mega bits per second
M/N	Monochrome TV system. Sound carrier distance is 4.5 MHz
MOSFET	Metal Oxide Silicon Field Effect Transistor, switching device
MPEG	Motion Pictures Experts Group
MPIF	Multi Platform InterFace
MUTE	MUTE Line
NC	Not Connected
NICAM	Near Instantaneous Compounded Audio Multiplexing. This is a digital sound system, mainly used in Europe.
NTC	Negative Temperature Coefficient, non-linear resistor
NTSC	National Television Standard Committee. Colour system mainly used in North America and Japan. Colour carrier NTSC M/N= 3.579545 MHz, NTSC 4.43= 4.433619 MHz (this is a VCR norm, it is not transmitted off-air)
NVM	Non-Volatile Memory: IC containing TV related data such as alignments
O/C	Open Circuit
OSD	On Screen Display
OTC	On screen display Teletext and Control; also called Artistic (SAA5800)
P50	Project 50: communication protocol between TV and peripherals
PAL	Phase Alternating Line. Colour system mainly used in West Europe (colour carrier= 4.433619 MHz) and South America (colour carrier PAL M= 3.575612 MHz and PAL N= 3.582056 MHz)
PCB	Printed Circuit Board (same as "PWB")
PCM	Pulse Code Modulation
PDP	Plasma Display Panel
PFC	Power Factor Corrector (or Pre-conditioner)
PIP	Picture In Picture
PLL	Phase Locked Loop. Used for e.g. FST tuning systems. The customer can give directly the desired frequency
POR	Power On Reset, signal to reset the P
Progressive Scan	Scan mode where all scan lines are displayed in one frame at the same time, creating a double vertical resolution.
PTC	Positive Temperature Coefficient, non-linear resistor
PWB	Printed Wiring Board (same as "PCB")
PWM	Pulse Width Modulation
QTNR	Quality Temporal Noise Reduction
QVCP	Quality Video Composition Processor
RAM	Random Access Memory
RGB	Red, Green, and Blue. The primary colour signals for TV. By mixing levels of R, G, and B, all colours (Y/C) are reproduced.
RC	Remote Control
RC5 / RC6	Signal protocol from the remote control receiver
RESET	RESET signal
ROM	Read Only Memory
R-TXT	Red TeleteXT
SAM	Service Alignment Mode
S/C	Short Circuit
SCART	Syndicat des Constructeurs d'Appareils Radiorecepteurs et Televisieurs
SCL	Serial Clock I2C
SCL-F	CLock Signal on Fast I2C bus
SD	Standard Definition
SDA	Serial Data I2C
SDA-F	DAta Signal on Fast I2C bus
SDI	Serial Digital Interface, see “ITU-656”
SDRAM	Synchronous DRAM
SECAM	SEequence Couleur Avec Memoire. Colour system mainly used in France and East Europe. Colour carriers= 4.406250 MHz and 4.250000 MHz
SIF	Sound Intermediate Frequency
SMPS	Switched Mode Power Supply
SOG	Sync On Green
SOPS	Self Oscillating Power Supply
S/PDIF	Sony Philips Digital InterFace
SRAM	Static RAM
SSB	Small Signal Board
STBY	STandBY
SOG	Sync On Green
SVGA	800x600 (4:3)
SVHS	Super Video Home System
SW	Software
SXGA	1280x1024
TFT	Thin Film Transistor
THD	Total Harmonic Distortion
TMDS	Transmission Minimised Differential Signalling
TXT	TeleteXT
TXT-DW	Dual Window with TeleteXT
uP	Microprocessor
UXGA	1600x1200 (4:3)
V	V-sync to the module
VCR	Video Cassette Recorder
VESA	Video Electronics Standards Association
VGA	640x480 (4:3)
VL	Variable Level out: processed audio output toward external amplifier
WYSIWYR	What You See Is What You Record: record selection that follows main picture and sound
WXGA	1280x768 (15:9)
XTAL	Quartz crystal
XGA	1024x768 (4:3)
Y	Luminance signal
Y/C	Luminance (Y) and Chrominance (C) signal
YPbPr	Component video. Luminance and scaled colour difference signals (B-Y and R-Y)
YUV	Component video

9.11 IC Data Sheets

This section shows the internal block diagrams and pin layouts of ICs that are drawn as "black boxes" in the electrical diagrams (with the exception of "memory" and "logic" ICs).

9.11.1 Diagram A1, AVS1ACP08 (IC 7805)

BLOCK DIAGRAM

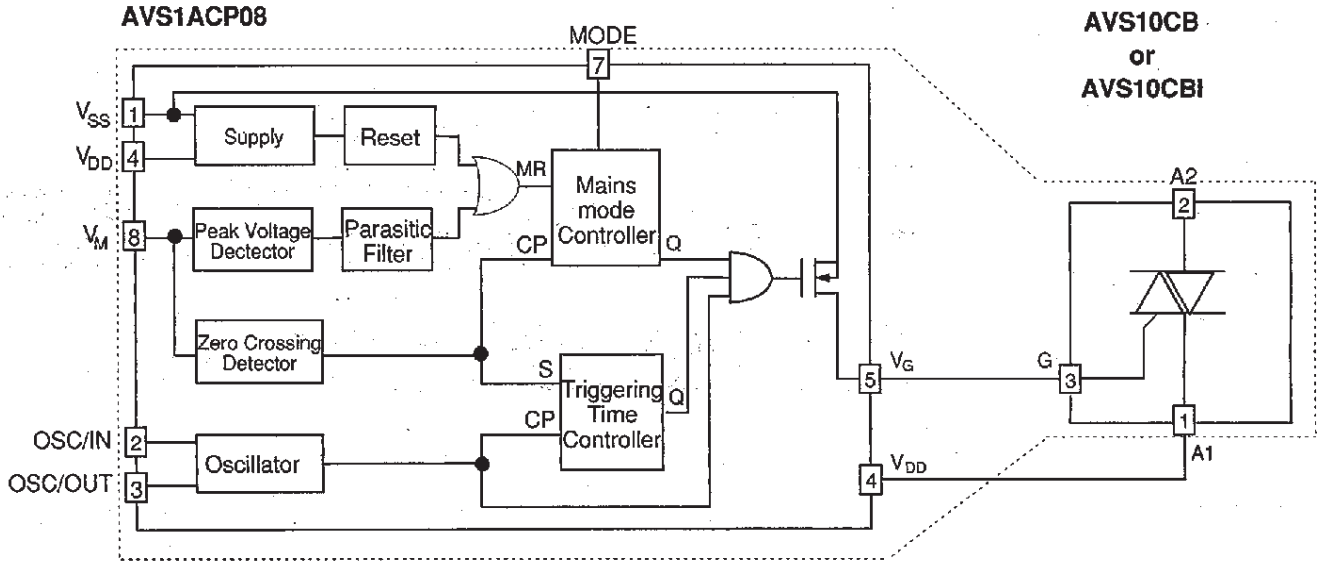

PIN CONFIGURATION

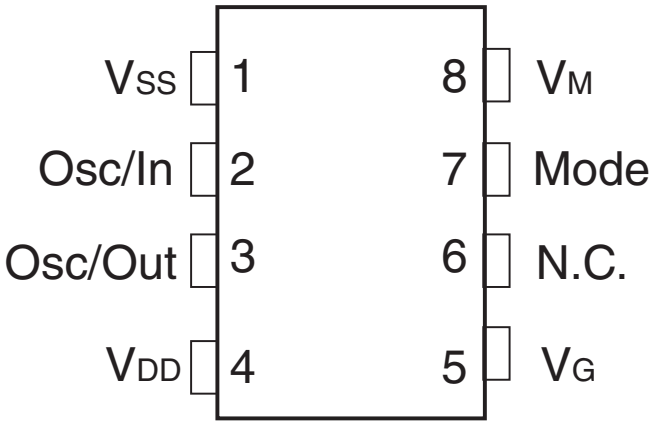

E_14620_145.eps
200804

Figure 9-20 Internal Block Diagram and Pin Layout

9.11.2 Diagram B4D/B4E, PNX2000 (IC 7K80)

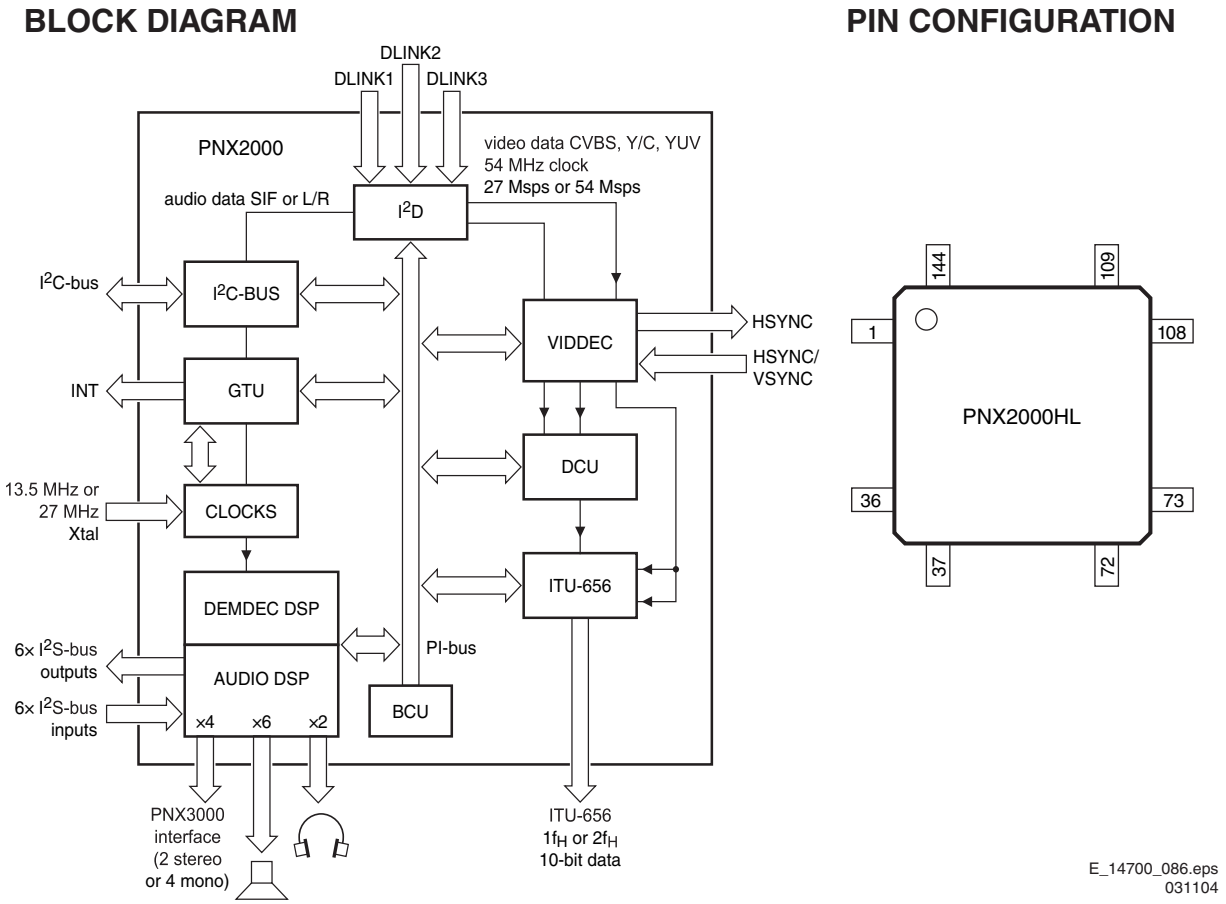

Figure 9-21 Internal block diagram and pin configuration

9.11.3 Diagram B11B, PCA9554 (IC 7I55)

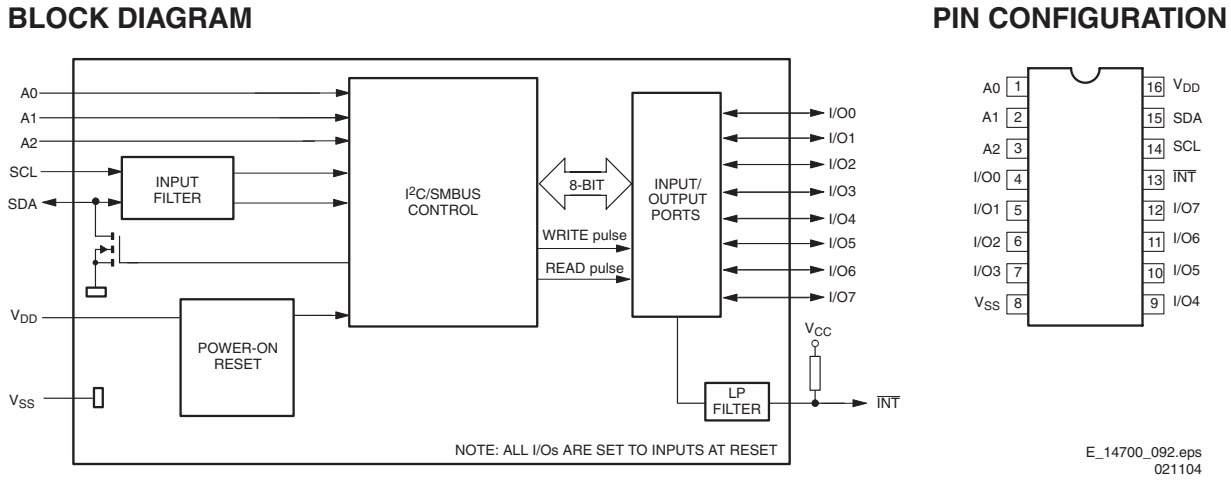

Figure 9-22 Internal block diagram and pin configuration

9.11.4 Diagram B4F, T6TU5 (IC 7J50)

BLOCK DIAGRAM

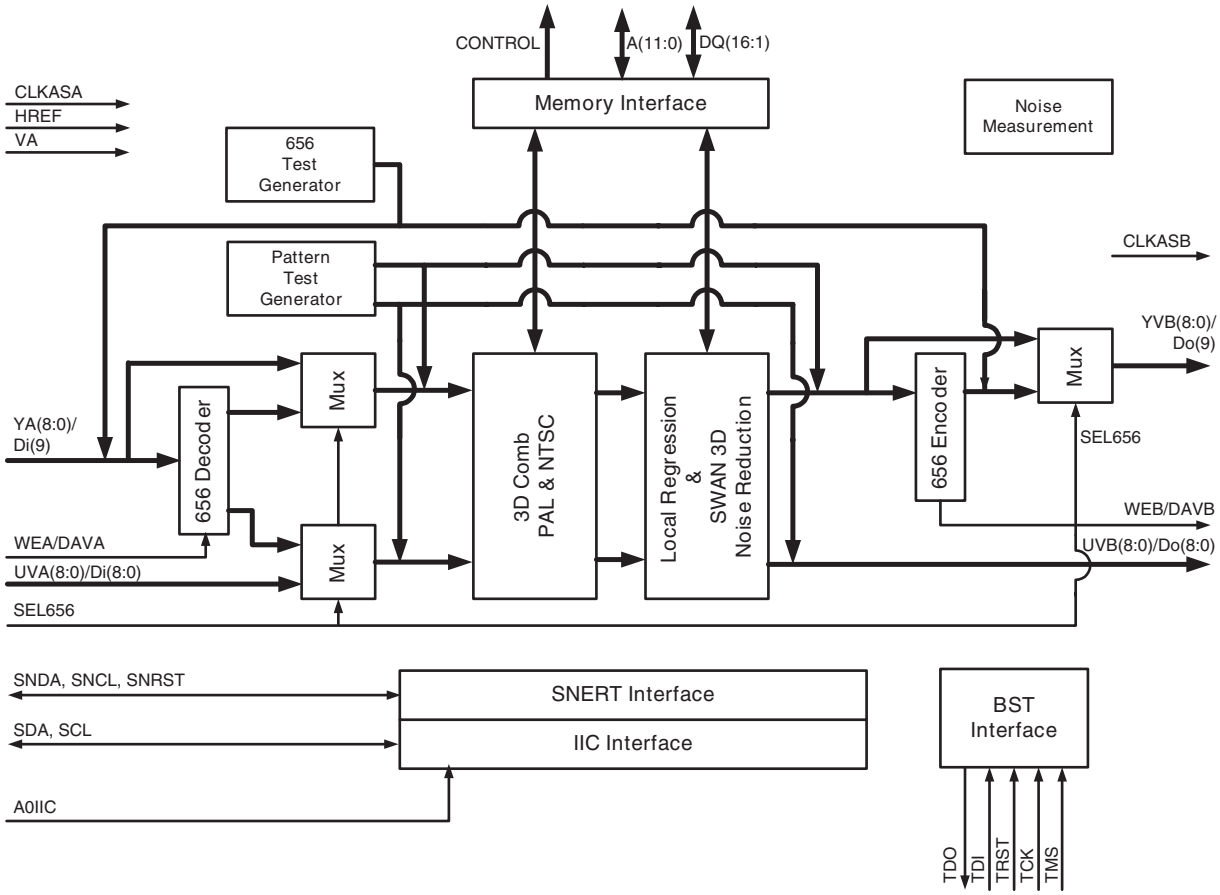

PIN CONFIGURATION

	1	2	3	4	5	6	7	8	9	10	11	12	13	14	15	
A	WEB/ DAVB	UVA0 /Di0	UVA2 /Di2	UVA4 /Di4	UVA6 /Di6	UVA8 /Di8	SEL656	TST1	YA2	YA4	YA6	YA8	VA	HREF	SDA	A
B	YB8	VSS	UVA1 /Di1	UVA3 /Di3	UVA5 /Di5	UVA7 /Di7	YA0 /Di9	BISTEN	YA1	YA3	YA5	YA7	WEA/ DAVA	VSS	SCL	B
C	YB7	YB6	VSS	VDDS	VSS	VSS	VDDC	VDDC	VSS	VSS	VDDC	VDDS	VSS	SNDA	SNRST	C
D	YB5	YB4	VDDC	N.C.									VSS	SNCL	TCK	D
E	YB3	YB2	VSS										VDDC	TMS	TDO	E
F	TST2	YB1	VSS										VSS	TRST	TDI	F
G	CLKASB	YB0 /Do9	VDDS										VDDS	A0ICC	RESET	G
H	CLKASA	UVB8/ Do8	TST3										VDDC	CLK EXT	CLKSEL	H
J	UVB7 /Do7	UVB6/ Do6	VSS										VSS	CLK	WEN	J
K	UVB5 /Do5	UVB4/ Do4	VDDC										VSS	CASN	RASN	K
L	UVB3 /Do3	UVB2 /Do2	VSS										VDDS	DQM	DQ16	L
M	UVB1 /Do1	UVB0 /Do0	VDDS										VSS	DQ14	DQ15	M
N	AVD	N.C.	VDDS	VSS	VSS	VDDC	VSS	VDDS	VDDC	VSS	VDDS	VSS	VSS	VDDS	DQ13	N
P	AVS	VSS	A7	A9	A2	A0	A11	DQ7	DQ6	DQ4	DQ3	DQ1	VDDS	VSS	DQ12	P
R	A4	A5	A6	A8	A3	A1	A10	DQ8	VSS	DQ5	VSS	DQ2	DQ9	DQ10	DQ11	R
	1	2	3	4	5	6	7	8	9	10	11	12	13	14	15	

COLUMBUS TOP-VIEW

PPA Version 2.7

E_14700_087.eps
021104

Figure 9-23 Internal block diagram and pin configuration

9.11.5 Diagram B6A/B6B/B6C/B6D, PNX8550 (IC 7V00)

BLOCK DIAGRAM

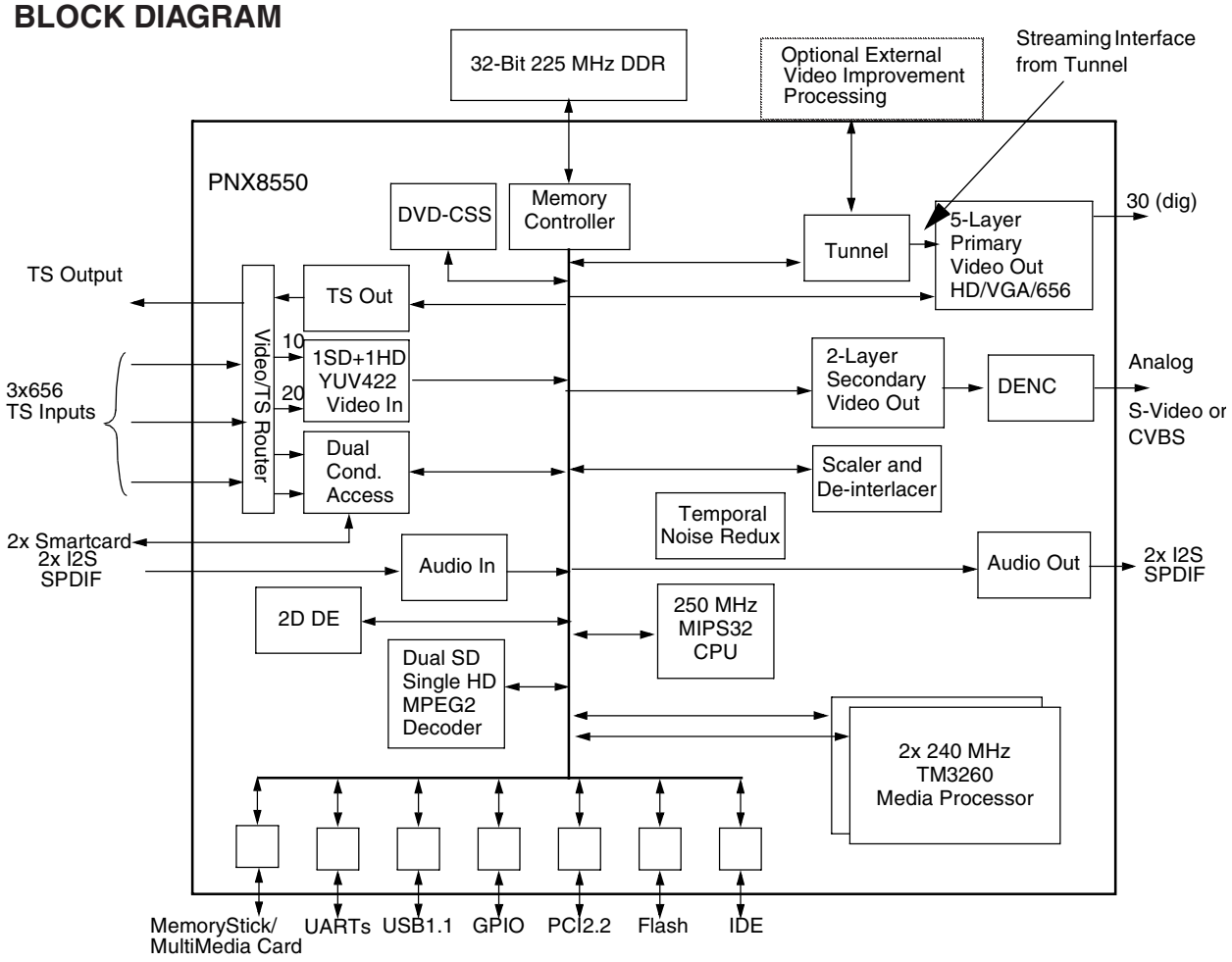

PIN CONFIGURATION

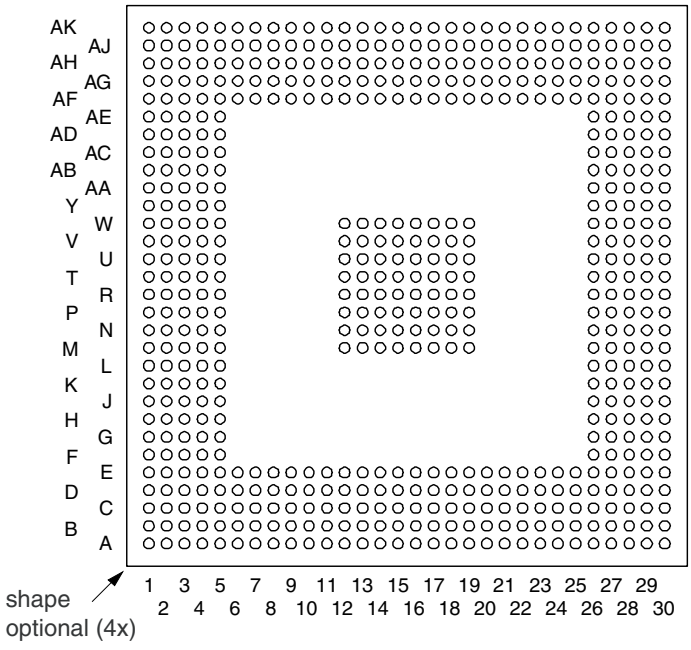

E_14700_088.eps
021104

Figure 9-24 Internal block diagram and pin configuration

9.11.6 Diagram B6A, LM3526 (IC 7Q01)

BLOCK DIAGRAM

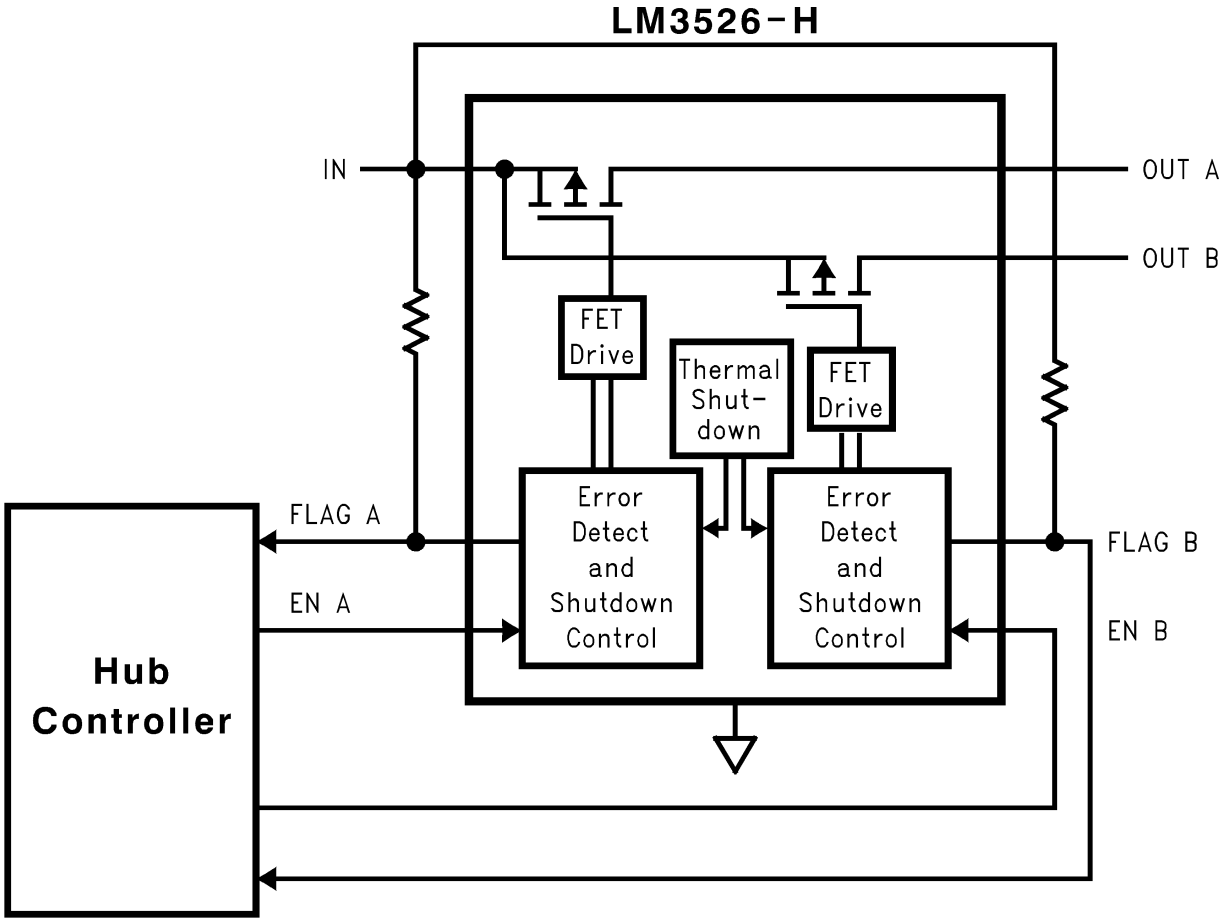

PIN CONFIGURATION

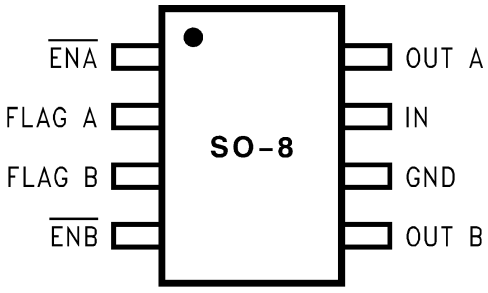

E_14700_089.eps
021104

Figure 9-25 Internal block diagram and pin configuration

9.11.7 Diagram B6B/B8, NE57814 (IC 7V03/7R01)

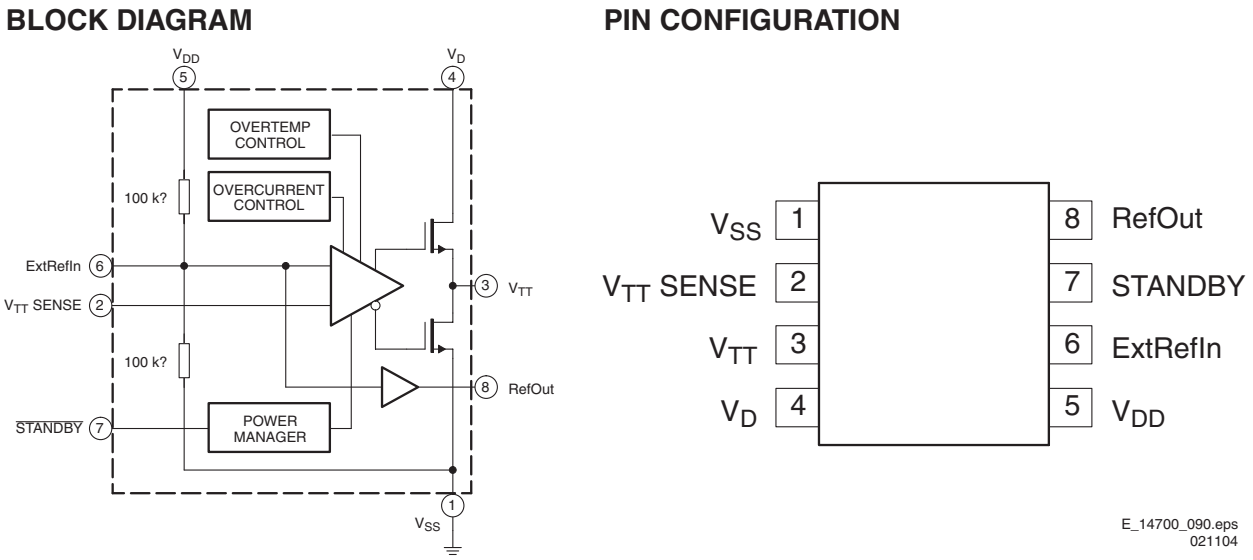

Figure 9-26 Internal block diagram and pin configuration

9.11.8 Diagram B7B, CY2305 (IC 7N54)

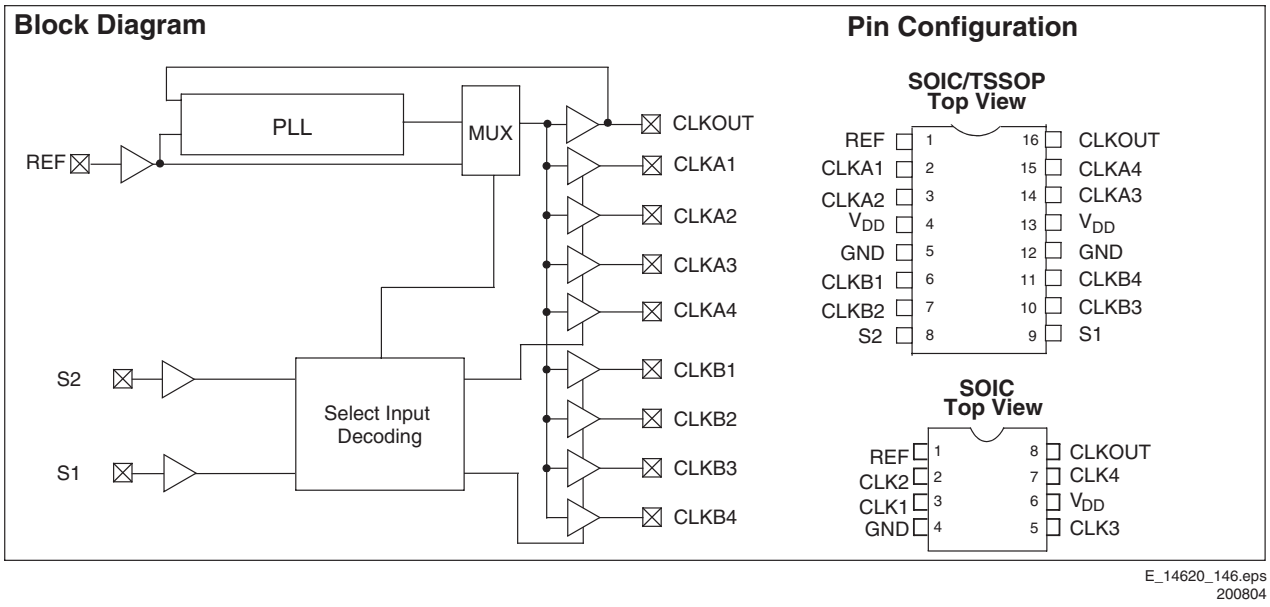

Figure 9-27 Internal block diagram and pin configuration

9.11.9 Diagram B7A, P89C557E4 (IC 7F15)

BLOCK DIAGRAM

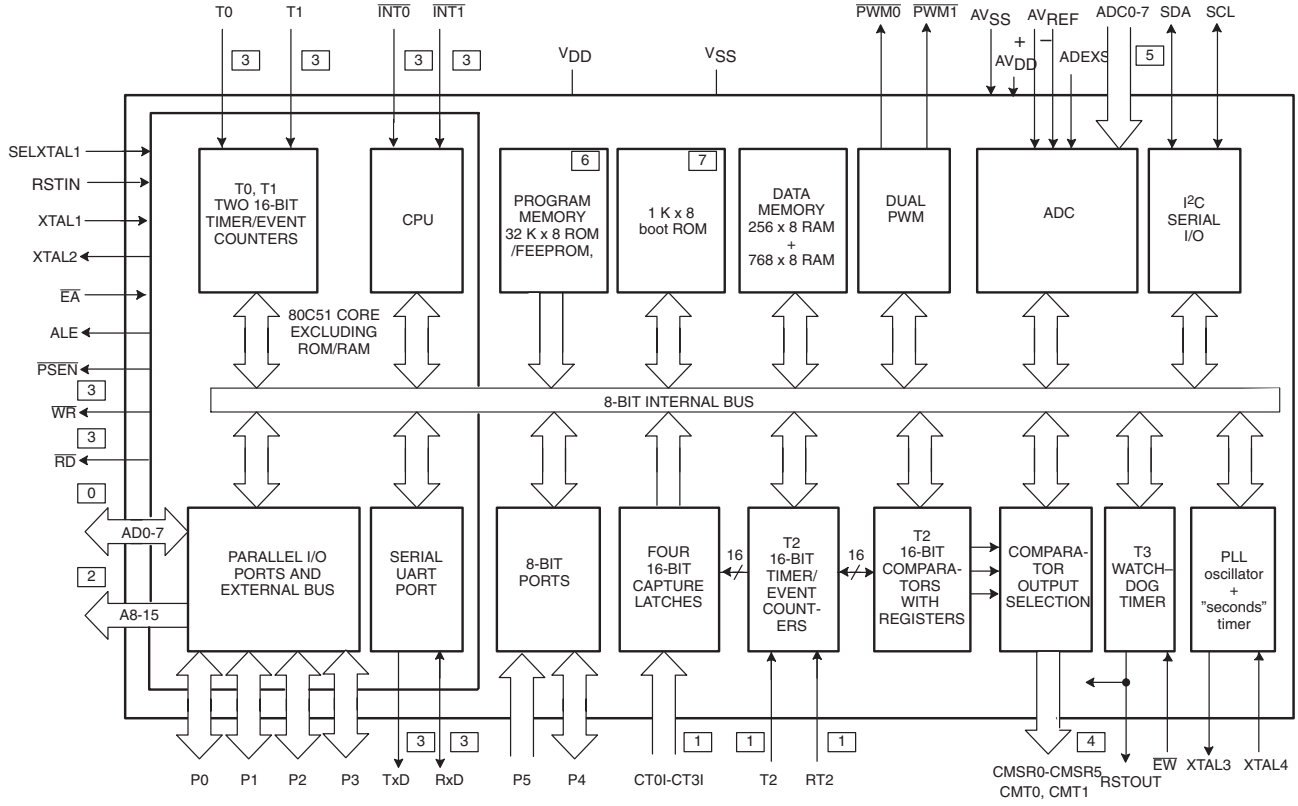

0 ALTERNATE FUNCTION OF PORT0
1 ALTERNATE FUNCTION OF PORT1
2 ALTERNATE FUNCTION OF PORT2
3 ALTERNATE FUNCTION OF PORT 3
4 ALTERNATE FUNCTION OF PORT 4
5 ALTERNATE FUNCTION OF PORT 5
6 NOT PRESENT IN P80C557E4
7 ONLY PRESENT IN P89C557E4

PIN CONFIGURATION

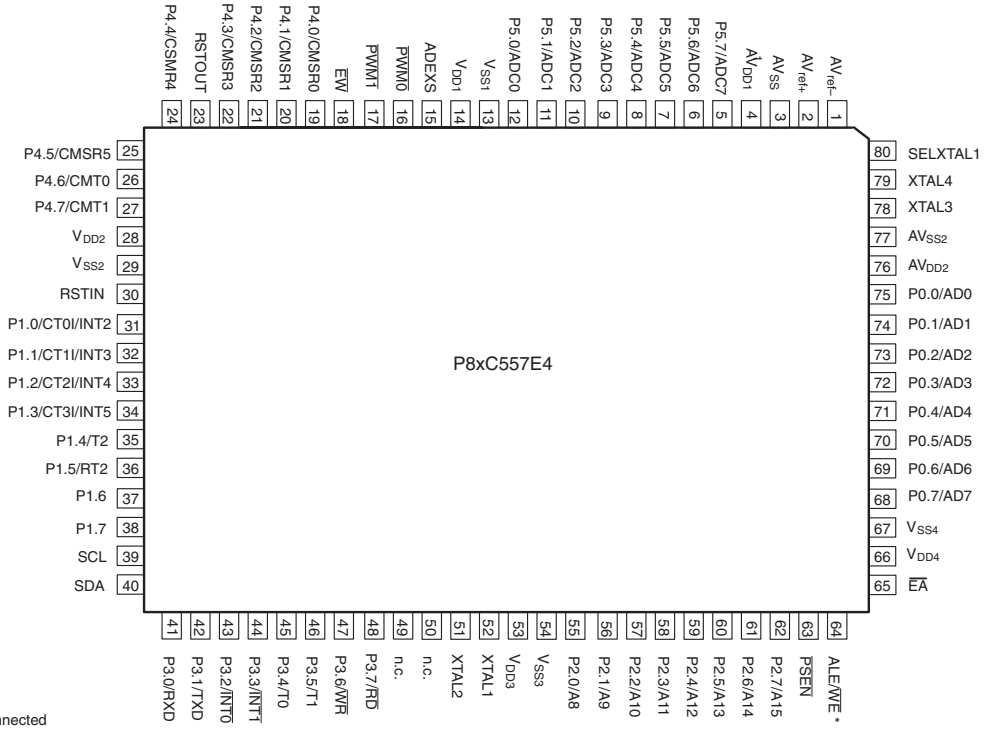

n.c. = not connected
* = only P89C557E4 with alternate function WE

E_14700_091.eps
031104

Figure 9-28 Internal block diagram and pin configuration

9.11.10 Diagram B11E, Sil9993 (IC 7E33)

BLOCK DIAGRAM

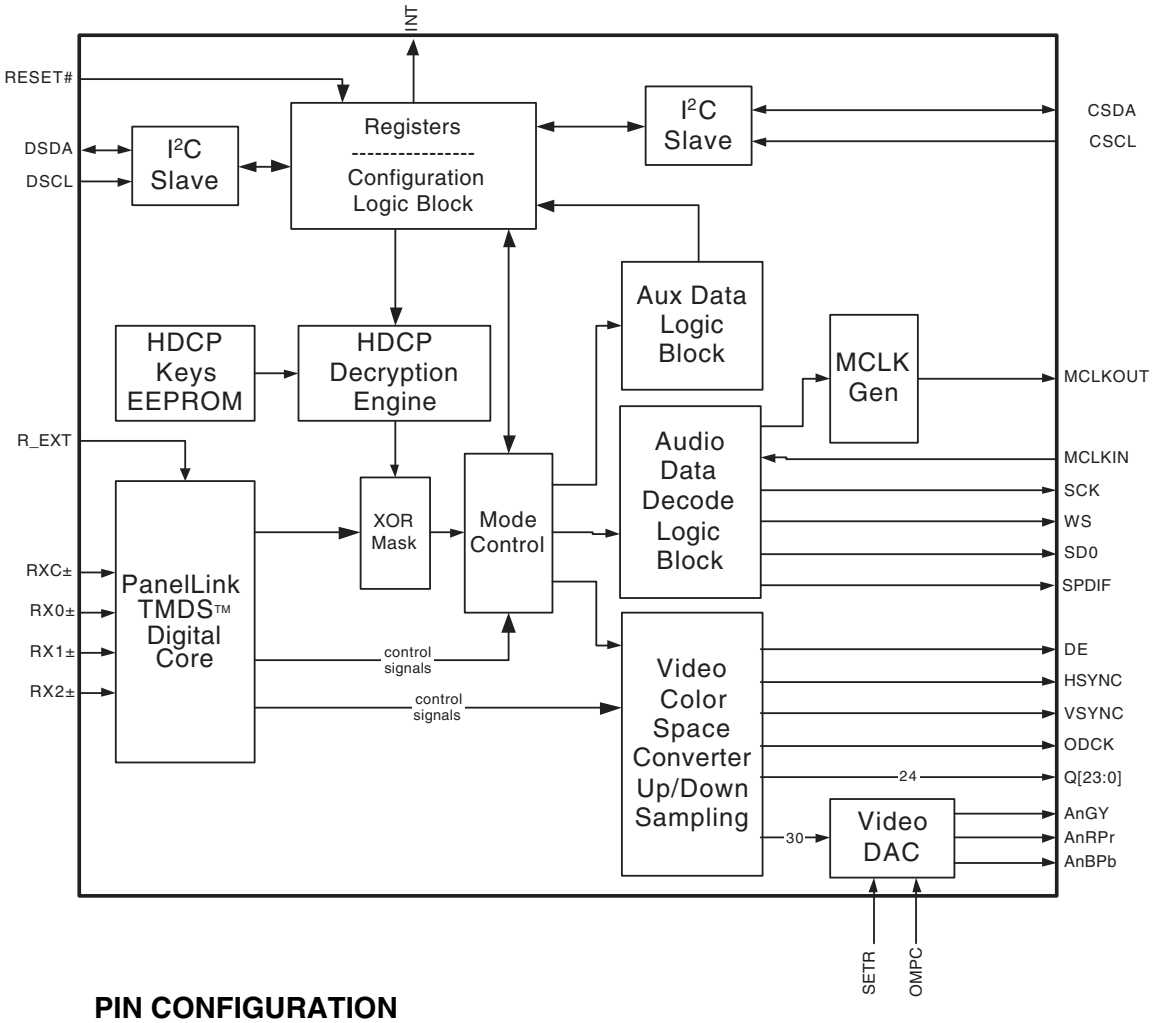

PIN CONFIGURATION

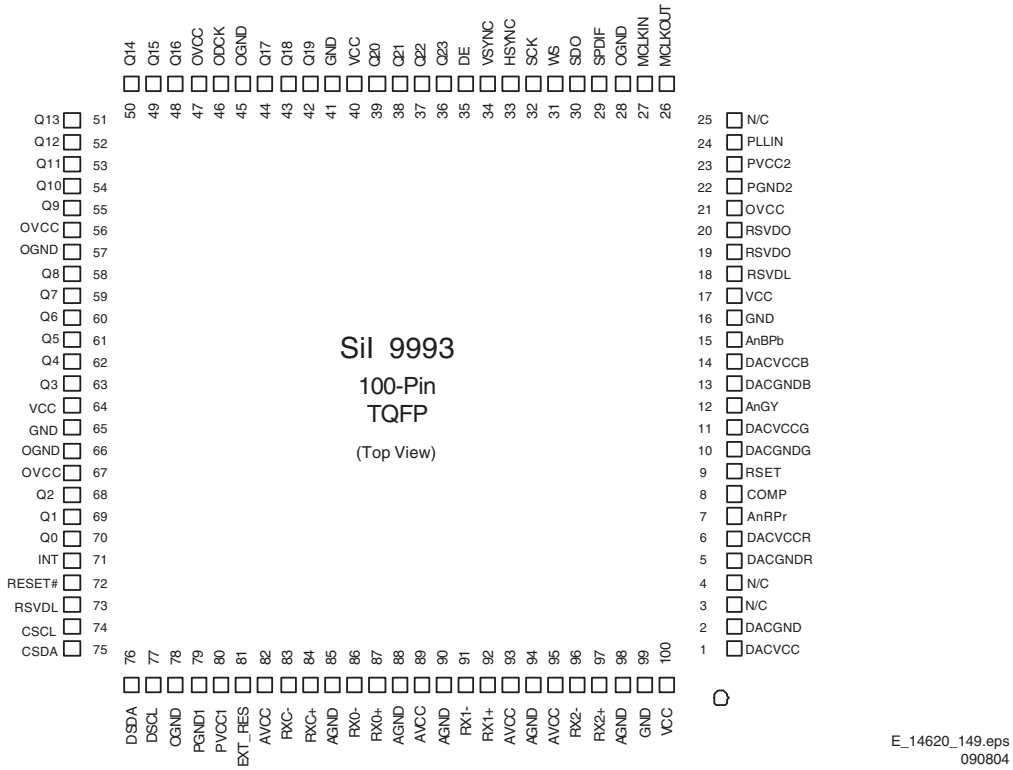

E_14620_149.eps
090804

Figure 9-29 Internal Block Diagram and Pin Layout

9.11.11 Diagram J, P87LPC760 (IC 7075)

BLOCK DIAGRAM

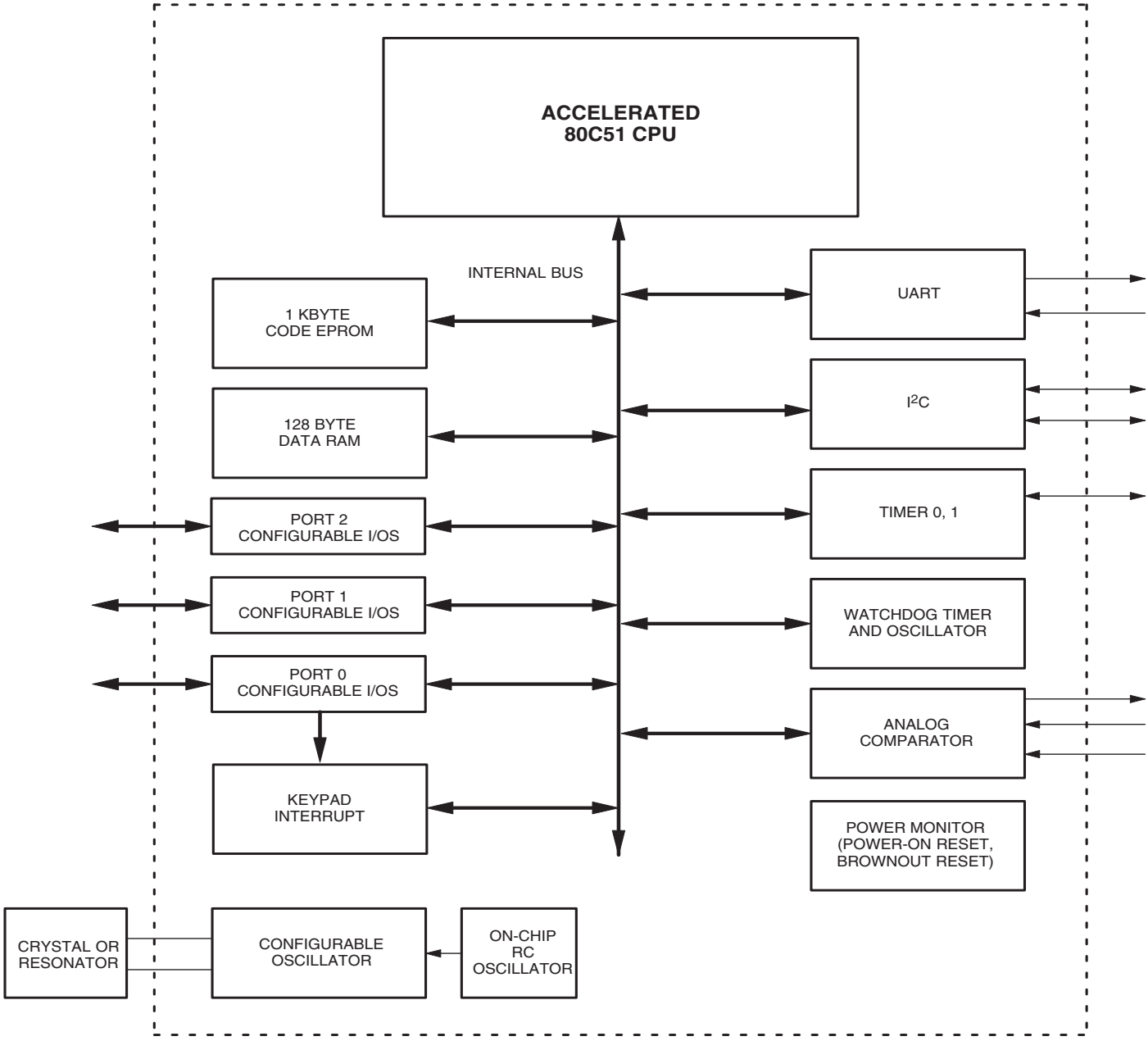

PIN CONFIGURATION

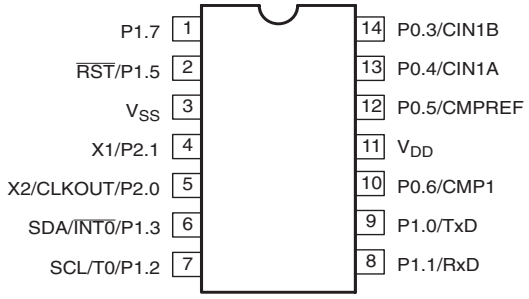

E_14620_150.eps
200804

Figure 9-30 Internal Block Diagram and Pin Layout

10. Spare Parts List

Set Level

Various

1004	9322 209 35682	LCD LQ315T3LZ13
1100	3104 308 78811	Media card reader
8302	3104 311 04721	Cable 7P/680/7P
8304	3104 311 08281	Cable 4P/480/4P
8305	3104 311 05351	Cable 3p/400/3p
8306	3104 311 08361	Cable 2P3/400/2P3
8307	3104 311 08381	Cable 4P/400/4P
8309	3104 311 08311	Cable 3P/480/4P
8314	3104 311 08531	Cable 10P/820/10P
8315	3104 311 08531	Cable 10P/820/10P
8318	3104 311 06841	Cable 6P/820/6P
8335	2422 076 00596	Cable USB-A 4p
8350	3104 311 08901	Cable 31P/230/30P

MF Supply 32" [A]

Various

0040	4822 492 62076	Transistor clamp
1007▲	4822 071 55002	Fuse T5A 250V
1304	2422 025 10648	Connector 8p m
1305	4822 267 10735	Connector 3p
1306	2422 025 16374	Connector 2p m
1307	2422 025 10647	Connector 4p m
1308	4822 265 20723	Connector 2p
1309	2422 025 04475	Connector 4p m
1309	2422 025 11143	Connector 3p m
1400▲	4822 253 50145	Fuse 3.15A T
1401▲	4822 252 11224	Fuse 1A T 250V
1402▲	4822 252 60151	Surge protect
1410▲	4822 265 11253	Fuse holder
1411▲	4822 265 11253	Fuse holder
1450▲	2422 132 07411	Relay 1p 5V 5A G5PA-1
1M02	2422 025 11244	Connector 7p m

⊣⊢

2000▲	2252 811 95022	1.5nF 20% 250V
2002	4822 124 11767	470µF 20% 25V
2003	4822 124 80061	1000µF 20% 25V
2007▲	4822 126 14583	470nF 10% 16V 0805
2008	4822 126 14583	470nF 10% 16V 0805
2009	2238 867 18101	100pF 1% 50V 0603
2010	4822 124 40207	100µF 20% 25V
2011	2022 333 00119	10nF 5% 1.6kV
2012	4822 126 13862	1.5nF 10% 2kV
2013	4822 126 13862	1.5nF 10% 2kV
2014▲	2252 811 95018	2.2nF 20% 250V
2014▲	4822 126 13451	2.2nF 10% 2kV
2015	5322 126 11583	10nF 10% 50V 0603
2016	2238 586 59812	100nF 20% 50V 0603
2017	2022 333 00119	10nF 5% 1.6kV
2019	5322 126 11583	10nF 10% 50V 0603
2020	2020 021 00012	2200µF 20% 16V
2020	4822 124 12417	2200µF 20% 25V
2021	2020 021 00012	2200µF 20% 16V
2021	4822 124 12417	2200µF 20% 25V
2022	2020 021 00012	2200µF 20% 16V
2022	4822 124 11583	2200µF 20% 35V
2023	4822 126 14583	470nF 10% 16V 0805
2024	2020 552 96326	220nF 10% 16V
2025	2020 552 96683	220nF 10% 50V
2026	4822 126 14238	2.2nF 50V 0603
2028	5322 126 11578	1nF 10% 50V 0603
2029	5322 126 11578	1nF 10% 50V 0603
2033	2020 552 96683	220nF 10% 50V
2034	2238 867 18101	100pF 1% 50V 0603
2035	2238 867 18101	100pF 1% 50V 0603
2036	4822 126 14583	470nF 10% 16V 0805
2037	4822 126 14583	470nF 10% 16V 0805
2038	2020 021 00012	2200µF 20% 16V
2038	4822 124 11583	2200µF 20% 35V
2039	4822 126 14583	470nF 10% 16V 0805
2039	5322 126 11583	10nF 10% 50V 0603
2040	4822 126 14249	560pF 10% 50V 0603
2041	2020 552 96683	220nF 10% 50V
2042	2020 552 96683	220nF 10% 50V
2043	2020 552 96683	220nF 10% 50V
2044	5322 126 11578	1nF 10% 50V 0603
2045	5322 126 11578	1nF 10% 50V 0603
2046	3198 017 34730	47nF 16V 0603
2047	5322 126 11583	10nF 10% 50V 0603
2048	5322 126 11578	1nF 10% 50V 0603
2050	5322 126 11578	1nF 10% 50V 0603
2051	2020 552 96683	220nF 10% 50V
2052	2020 552 96683	220nF 10% 50V
2053	2020 552 96683	220nF 10% 50V
2060	4822 126 14238	2.2nF 50V 0603
2061	4822 126 14238	2.2nF 50V 0603
2062	4822 126 14238	2.2nF 50V 0603
2063	4822 126 13881	470pF 5% 50V
2064	4822 126 13881	470pF 5% 50V
2065	4822 126 14238	2.2nF 50V 0603
2071	5322 126 11578	1nF 10% 50V 0603
2072	5322 126 11578	1nF 10% 50V 0603
2077	4822 126 14238	2.2nF 50V 0603
2290	5322 126 11583	10nF 10% 50V 0603
2291	4822 126 13881	470pF 5% 50V
2292	2020 021 91354	1000µF 20% 50V
2292	4822 124 12417	2200µF 20% 25V
2293	4822 126 13881	470pF 5% 50V
2294	2020 021 91354	1000µF 20% 50V
2294	4822 124 12417	2200µF 20% 25V
2400▲	2222 338 22474	470nF 20% 275V
2401▲	2222 338 22474	470nF 20% 275V
2407▲	2252 811 95065	220pF 10% 250V
2503	2020 024 90718	10µF 20% 450V
2803	2222 365 55563	56nF 10% 400V
2804	2222 365 55563	56nF 10% 400V
2816	2020 024 90749	330µF 20% 400V

⊣WW⊢

3000▲	4822 052 10478	4.7Ω 5% 0.33W
3001	4822 051 30101	100Ω 5% 0.062W
3002	4822 051 30103	10kΩ 5% 0.062W
3002	4822 051 30393	39kΩ 5% 0.062W
3003	4822 117 13632	100kΩ 1% 0603 0.62W
3004	4822 051 30273	27kΩ 5% 0.062W
3005	4822 051 30333	33kΩ 5% 0.062W
3006	4822 051 30103	10kΩ 5% 0.062W
3007	4822 051 30103	10kΩ 5% 0.062W
3008	4822 051 30331	330Ω 5% 0.062W
3009	4822 051 30332	3.3Ω 5% 0.062W
3010	4822 051 30471	47Ω 5% 0.062W
3011	4822 051 30471	47Ω 5% 0.062W
3012	4822 051 30153	15kΩ 5% 0.062W
3013	4822 051 30103	10kΩ 5% 0.062W
3014▲	4822 052 10101	100Ω 5% 0.33W
3015▲	4822 052 10479	47Ω 5% 0.33W
3016	4822 051 30222	2.2kΩ 5% 0.062W
3016	4822 051 30332	3.3Ω 5% 0.062W
3017▲	4822 052 10101	100Ω 5% 0.33W
3018	4822 052 10479	47Ω 5% 0.33W
3019	4822 051 30222	2.2kΩ 5% 0.062W
3019	4822 051 30332	3.3Ω 5% 0.062W
3020	4822 051 30222	2.2kΩ 5% 0.062W
3020	4822 051 30332	3.3Ω 5% 0.062W
3021	4822 117 12139	22Ω 5% 0.062W
3021	4822 117 12971	15Ω 5% 0603 0.62W
3022	4822 051 30681	680Ω 5% 0.062W
3023	4822 051 30153	15kΩ 5% 0.062W
3025	4822 117 12903	1.8kΩ 1% 0.063W 0603
3026	4822 101 11383	Potm. 470Ω 30% linear
3027	4822 117 13632	100kΩ 1% 0603 0.62W
3028	4822 051 30332	3.3Ω 5% 0.062W
3029	4822 051 30222	2.2kΩ 5% 0.062W
3029	4822 051 30332	3.3Ω 5% 0.062W
3030	4822 051 30183	18kΩ 5% 0.062W
3031	4822 051 30103	10kΩ 5% 0.062W
3032	4822 051 30103	10kΩ 5% 0.062W
3033	4822 052 11108	1Ω 5% 0.5W
3034	4822 051 30102	1kΩ 5% 0.062W
3035	4822 051 30332	3.3Ω 5% 0.062W
3036	4822 117 13632	100kΩ 1% 0603 0.62W
3039	4822 051 30102	1kΩ 5% 0.062W
3040	5322 117 13056	8.2kΩ 1% 0.063W 0603
3041	4822 051 30333	33kΩ 5% 0.062W
3042	4822 051 30123	12kΩ 5% 0.1W
3043	4822 051 30109	10Ω 5% 0.062W
3044	4822 051 30471	47Ω 5% 0.062W
3045	4822 117 12139	22Ω 5% 0.062W
3045	4822 117 12971	15Ω 5% 0603 0.62W
3046	4822 117 12139	22Ω 5% 0.062W
3046	4822 117 12971	15Ω 5% 0603 0.62W
3047	4822 051 30479	47Ω 5% 0.062W
3048	4822 051 30272	2.7kΩ 5% 0.062W
3049	4822 051 30333	33kΩ 5% 0.062W
3050	4822 050 28204	820kΩ 1% 0.6W
3051	4822 051 30472	4.7Ω 5% 0.062W
3052	2322 704 67502	7.5kΩ 1% 0.5W
3053	4822 050 26804	680kΩ 1% 0.6W
3054	4822 051 30472	4.7Ω 5% 0.062W
3055	4822 051 30221	220Ω 5% 0.062W
3056	4822 051 30221	220Ω 5% 0.062W
3057	4822 051 30221	220Ω 5% 0.062W
3058	4822 053 20565	5.6MΩ 5% 0.25W
3059	4822 051 30222	2.2kΩ 5% 0.062W
3061	4822 051 30683	68kΩ 5% 0.062W
3064	4822 051 30103	10kΩ 5% 0.062W
3065	4822 117 13632	100kΩ 1% 0603 0.62W
3066	4822 051 30103	10kΩ 5% 0.062W
3067	4822 051 30101	100Ω 5% 0.062W
3068	4822 051 30222	2.2kΩ 5% 0.062W
3070	4822 051 30102	1kΩ 5% 0.062W
3071	4822 051 30103	10kΩ 5% 0.062W
3075	4822 051 30102	1kΩ 5% 0.062W
3100	4822 051 30109	10Ω 5% 0.062W
3292	4822 051 30561	560Ω 5% 0.062W
3400▲	2122 550 00158	VDR 1mA 612V
3401▲	4822 053 21475	4.7MΩ 5% 0.5W
3402▲	4822 053 21475	4.7MΩ 5% 0.5W
3403▲	4822 053 21475	4.7MΩ 5% 0.5W
3404	4822 116 83872	220Ω 5% 0.5W
3810	2322 257 41123	12kΩ 5% 5W
3999	4822 051 30102	1kΩ 5% 0.062W
9002	4822 051 30008	Jumper 0603
9009	4822 051 30008	Jumper 0603
9030	4822 051 30008	Jumper 0603
9047	4822 051 30008	Jumper 0603
9085	4822 051 30008	Jumper 0603

⊣∿⊢

5001	2422 531 02444	Transformer S13932-04Y
5002▲	8204 000 77321	Transformer 2652.0002
5004	4822 526 10704	Bead 50 Ω at 100MHz
5005	4822 157 11411	Bead 80Ω at 100MHz
5005	4822 526 10704	Bead 50 Ω at 100MHz
5007	4822 157 11411	Bead 80Ω at 100MHz
5007	4822 526 10704	Bead 50 Ω at 100MHz
5008	4822 157 11411	Bead 80Ω at 100MHz
5008	4822 526 10704	Bead 50 Ω at 100MHz
5009	4822 157 11411	Bead 80Ω at 100MHz
5010	4822 157 11411	Bead 80Ω at 100MHz
5013	4822 157 11411	Bead 80Ω at 100MHz
5013	4822 526 10704	Bead 50 Ω at 100MHz
5015	4822 157 11411	Bead 80Ω at 100MHz
5016	4822 157 11411	Bead 80Ω at 100MHz
5017	4822 526 10704	Bead 50 Ω at 100MHz
5026	4822 526 10704	Bead 50 Ω at 100MHz
5028	4822 526 10704	Bead 50 Ω at 100MHz
5029	4822 526 10704	Bead 50 Ω at 100MHz
5030	4822 526 10704	Bead 50 Ω at 100MHz
5031	4822 526 10704	Bead 50 Ω at 100MHz
5032	4822 526 10704	Bead 50 Ω at 100MHz
5033	4822 526 10704	Bead 50 Ω at 100MHz
5034	4822 526 10704	Bead 50 Ω at 100MHz
5040	4822 157 11411	Bead 80Ω at 100MHz
5041	4822 526 10704	Bead 50 Ω at 100MHz
5291	2422 536 00776	33µH 10%
5292	2422 536 00776	33µH 10%
5293	2422 536 00776	33µH 10%
5401▲	2422 549 43291	Filter 47mH 2A
5403	3104 308 21101	Coil DTH40203H65
5403	3104 308 21191	Coil DTH40323H65

⊣▷|

6002	4822 130 11397	BAS316
6003	4822 130 11397	BAS316
6004	4822 130 11397	BAS316
6004	4822 130 80622	BAT54
6005	4822 130 11397	BAS316
6005	4822 130 80622	BAT54
6006	4822 130 11397	BAS316
6007	4822 130 11397	BAS316
6008	4822 130 11397	BAS316
6009	4822 130 11152	UDZ18B
6010	4822 130 11397	BAS316
6011	4822 130 11397	BAS316
6012	9322 197 30685	SML4744
6013	9322 197 30685	SML4744
6017	4822 130 11397	BAS316
6020	4822 130 11397	BAS316
6021	9322 207 11687	STPS20L45CT
6022	4822 130 11148	UDZ4.7B
6023	4822 130 11397	BAS316
6025	9322 207 11687	STPS20L45CT

6027	4822 130 11397	BAS316
6028	4822 130 11397	BAS316
6030	4822 130 11397	BAS316
6044	9322 207 11687	STPS20L45CT
6045	9322 207 11687	STPS20L45CT
6051	4822 130 11397	BAS316
6054	4822 130 11551	UDZS10B
6077	9322 202 55685	BYG22D
6078	9322 202 55685	BYG22D
6079	9322 202 55685	BYG22D
6080	9322 202 55685	BYG22D
6081	9340 548 67115	PDZ22B
6291	4822 130 11572	STPS8H100F
6293	4822 130 11572	STPS8H100F
6460	4822 130 11397	BAS316
6461	4822 130 11397	BAS316
6506	4822 130 83147	DF06M
6807	9322 199 74682	GBJ6J-B15

7001	9322 108 21682	MC34067P
7002⚠	9322 149 04682	TCET1102
7004	3198 010 42310	BC847BW
7005	9322 192 18687	STP15NK50ZFP
7005	9322 205 26687	FQPF18N50V2
7006	9322 192 18687	STP15NK50ZFP
7006	9322 205 26687	FQPF18N50V2
7007	3198 010 42320	BC857BW
7008	3198 010 42320	BC857BW
7009	3198 010 42320	BC857BW
7010	4822 209 16406	TL431ACD
7010	9322 125 09668	TL431AID
7017	3198 010 42320	BC857BW
7018	3198 010 42310	BC847BW
7030	3198 010 42310	BC847BW
7031	3198 010 42310	BC847BW

Small Signal Board [B]

Various

0601	3104 317 07391	SW Stby (see Prod.Surv.)
0603	3104 317 06633	SW DDC(see Prod.Surv.)
0605	3104 317 08171	SW Main(see Prod.Surv.)
1C33⚠	2422 086 11092	Fuse 500mA 50V F SMD
1C51	2422 549 44369	SAW 38.9MHz K9656L
1C52	2422 549 44372	SAW 38.9MHz K3953L
1D01⚠	2422 086 00623	Fuse 3A T 125V
1E00	2422 025 18133	Socket SCART
1E10	2422 549 00146	Line filter 20V 3A
1E11	2422 549 00146	Line filter 20V 3A
1E12	2422 549 00146	Line filter 20V 3A
1E13	2422 549 00146	Line filter 20V 3A
1E35⚠	2422 025 17601	Connector 40p f
1E65	2422 033 00018	Connector 19p F
1F01	2422 543 01443	Xtal 16MHz 20pF
1G50	2422 025 18427	Connector 31p f
1G51	2422 549 45325	Bead 67Ω at 100MHz
1G52	2422 549 45325	Bead 67Ω at 100MHz
1G53	2422 549 45325	Bead 67Ω at 100MHz
1G54	2422 549 45325	Bead 67Ω at 100MHz
1G55	2422 549 45325	Bead 67Ω at 100MHz
1H00	2422 543 01397	Xtal 27MHz 18pF
1H01⚠	2422 025 17775	Socket USB 4p f
1I00	2422 026 05622	Socket 2p f
1I05	2422 026 05393	Socket 2p f
1I07	2422 026 05527	Socket Cinch 2p f
1I10	2422 026 05393	Socket 2p f
1M01	2422 025 10768	Connector 3p m
1M15	4822 267 10459	Connector 3p
1M17	2422 025 17765	Connector 7p m
1M20	2422 025 10772	Connector 12p m
1M52	2422 025 10769	Connector 9p m
1T03	8204 000 77501	Tuner UV1318S
1U02⚠	2422 086 00623	Fuse 3A T 125V
8301	3104 311 00351	Cable 3p/400/3p
8303	3104 311 07971	Cable 10P/280/10P
8308	3104 311 06951	Cable 2P3/180/2P
8317	3104 311 07871	Cable 7P/180/7P
8320	3104 311 08181	Cable 12P/400/12P
8335	3104 311 08801	Flex foil 40p/140/40p
8336	3104 311 08161	Cable 11P/480/11P
8346	3104 311 06991	Cable 11P/280/11P
8352	3104 311 07381	Cable 9P/220/9P

2C01	2238 787 15641	22nF 5% 16V 0402
2C03	2238 787 15641	22nF 5% 16V 0402
2C04	2238 787 15641	22nF 5% 16V 0402
2C05	2238 787 15641	22nF 5% 16V 0402
2C06	2238 787 15641	22nF 5% 16V 0402
2C07	2238 787 15641	22nF 5% 16V 0402
2C08	2238 787 15641	22nF 5% 16V 0402
2C09	2238 787 15641	22nF 5% 16V 0402
2C10	2238 869 15221	220pF 1% 50V 0402
2C12	2238 787 15641	22nF 5% 16V 0402
2C13	2238 787 15641	22nF 5% 16V 0402
2C15	2238 787 15641	22nF 5% 16V 0402
2C16	2238 787 15641	22nF 5% 16V 0402
2C17	2238 787 15641	22nF 5% 16V 0402
2C18	2238 787 15641	22nF 5% 16V 0402
2C19	2238 787 15641	22nF 5% 16V 0402
2C20	2238 787 15641	22nF 5% 16V 0402
2C21	4822 124 23002	10µF 16V
2C22	2238 787 15641	22nF 5% 16V 0402
2C23	2238 787 15641	22nF 5% 16V 0402
2C24	2022 552 05679	1µF 10% 16V 0805
2C25	2020 004 90283	10µF 20% 10V 1206
2C27	2238 586 59812	100nF 20% 50V 0603
2C28	2238 586 59812	100nF 20% 50V 0603
2C31	2238 586 59812	100nF 20% 50V 0603
2C32	4822 124 23002	10µF 16V
2C33	2238 586 59812	100nF 20% 50V 0603
2C34	4822 124 23002	10µF 16V
2C35	2238 586 59812	100nF 20% 50V 0603
2C36	2022 552 05679	1µF 10% 16V 0805
2C37	2020 552 96618	1nF 10% 50V 0402
2C38	2022 552 05679	1µF 10% 16V 0805
2C39	2238 586 59812	100nF 20% 50V 0603
2C40	2238 586 59812	100nF 20% 50V 0603
2C41	2238 787 15641	22nF 5% 16V 0402
2C44	2238 586 59812	100nF 20% 50V 0603
2C45	2022 552 05679	1µF 10% 16V 0805
2C52	4822 124 23002	10µF 16V
2C53	2020 552 96628	10nF 10% 16V 0402
2C56	2022 552 05679	1µF 10% 16V 0805
2C57	2020 552 96628	10nF 10% 16V 0402
2C59	3198 032 55130	10µF 20% 20V
2C60	2020 552 96628	10nF 10% 16V 0402
2C63	2238 586 59812	100nF 20% 50V 0603
2C65	2020 552 96628	10nF 10% 16V 0402
2C66	3198 032 55130	10µF 20% 20V
2C67	2022 552 05679	1µF 10% 16V 0805
2C68	2022 552 05679	1µF 10% 16V 0805
2C69	2238 586 59812	100nF 20% 50V 0603
2C70	2020 552 96628	10nF 10% 16V 0402
2C72	2020 552 96618	1nF 10% 50V 0402
2C73	2020 552 96628	10nF 10% 16V 0402
2C74	2020 552 96628	10nF 10% 16V 0402
2C78	2022 552 05679	1µF 10% 16V 0805
2C79	2022 552 05679	1µF 10% 16V 0805
2C81	2022 029 00632	330µF 20% 6.3V
2C82	3198 032 55130	10µF 20% 20V
2D10	5322 124 41945	22µF 20% 35V
2D11	2020 552 96628	10nF 10% 16V 0402
2D12	2020 552 96623	2.2nF 10% 50V 0402
2D13	2022 552 05679	1µF 10% 16V 0805
2D30	2238 586 59812	100nF 20% 50V 0603
2D31	2020 552 96618	1nF 10% 50V 0402
2D32	2238 586 59812	100nF 20% 50V 0603
2D33	2022 552 05635	22µF 10% 16V
2D34	2022 552 05635	22µF 10% 16V
2D35	2238 586 59812	100nF 20% 50V 0603
2D36	2022 552 05679	1µF 10% 16V 0805
2D37	2020 552 96618	1nF 10% 50V 0402
2D38	2020 552 96618	1nF 10% 50V 0402
2D39	2020 552 96618	1nF 10% 50V 0402
2D40	2238 586 59812	100nF 20% 50V 0603
2D41	2238 586 59812	100nF 20% 50V 0603
2D42	2238 787 15641	22nF 5% 16V 0402
2D43	2022 552 05635	22µF 10% 16V
2D44	2020 552 96628	10nF 10% 16V 0402
2D45	2020 552 96628	10nF 10% 16V 0402
2D46	3198 035 04710	470pF 50V 0402
2D47	2238 586 59812	100nF 20% 50V 0603
2D48	5322 124 41945	22µF 20% 35V
2D49	2020 552 96628	10nF 10% 16V 0402
2E00	2238 869 15101	100pF 5% 50V 0402
2E01	2238 869 15101	100pF 5% 50V 0402
2E02	2238 869 15101	100pF 5% 50V 0402
2E03	2238 869 15101	100pF 5% 50V 0402
2E04	2238 869 15101	100pF 5% 50V 0402
2E05	2238 869 15101	100pF 5% 50V 0402
2E06	2238 869 15101	100pF 5% 50V 0402
2E13	2238 586 59812	100nF 20% 50V 0603
2E14	2238 586 59812	100nF 20% 50V 0603
2E15	2238 586 59812	100nF 20% 50V 0603
2E16	2238 586 59812	100nF 20% 50V 0603
2E17	4822 124 11946	22µF 20% 16V
2E18	2238 586 59812	100nF 20% 50V 0603
2E19	2238 586 59812	100nF 20% 50V 0603
2E20	2238 586 59812	100nF 20% 50V 0603
2E21	2238 586 59812	100nF 20% 50V 0603
2E22	2020 552 96618	1nF 10% 50V 0402
2E23	2020 552 96618	1nF 10% 50V 0402
2E24	3198 035 71040	100nF 10% 16V 0402
2E25	2238 869 15101	100pF 5% 50V 0402
2E26	3198 017 34730	47nF 16V 0603
2E27	2238 869 15101	100pF 5% 50V 0402
2E28	2238 869 15101	100pF 5% 50V 0402
2E29	2020 552 96628	10nF 10% 16V 0402
2E30	2238 869 15101	100pF 5% 50V 0402
2E31	5322 124 41945	22µF 20% 35V
2E32	2020 552 96637	10µF 10% 6.3V 0805
2E34	3198 035 04710	470pF 50V 0402
2E35	4822 124 11946	22µF 20% 16V
2E36	4822 051 30008	Jumper 0603
2E37	2022 552 05679	1µF 10% 16V 0805
2E38	2022 552 05679	1µF 10% 16V 0805
2E39	2022 552 05679	1µF 10% 16V 0805
2E40	2238 869 15101	100pF 5% 50V 0402
2E41	2238 869 15101	100pF 5% 50V 0402
2E42	2020 012 00001	220µF 20% 16V
2E43	4822 124 80151	47µF 16V
2E44	2020 012 00001	220µF 20% 16V
2E48	4822 124 80151	47µF 16V
2E54	2238 869 15101	100pF 5% 50V 0402
2E56	2238 869 15101	100pF 5% 50V 0402
2E58	2238 869 15101	100pF 5% 50V 0402
2E60	2238 869 15101	100pF 5% 50V 0402
2E62	2238 869 15101	100pF 5% 50V 0402
2E64	2238 869 15101	100pF 5% 50V 0402
2E72	2238 869 15101	100pF 5% 50V 0402
2E74	2238 869 15101	100pF 5% 50V 0402
2E76	2238 869 15101	100pF 5% 50V 0402
2E78	2238 869 15101	100pF 5% 50V 0402
2E80	2238 869 15101	100pF 5% 50V 0402
2E90	2238 869 15101	100pF 5% 50V 0402
2E92	2238 869 15101	100pF 5% 50V 0402
2E94	2238 869 15101	100pF 5% 50V 0402
2E98	2238 869 15101	100pF 5% 50V 0402
2E99	2238 869 15101	100pF 5% 50V 0402
2F00	2238 586 59812	100nF 20% 50V 0603
2F01	2238 586 59812	100nF 20% 50V 0603
2F02	2238 586 59812	100nF 20% 50V 0603
2F03	2238 586 59812	100nF 20% 50V 0603
2F04	2238 586 59812	100nF 20% 50V 0603
2F05	2238 586 59812	100nF 20% 50V 0603
2F06	4822 126 14519	22pF 5% 50V 0402
2F07	4822 126 14519	22pF 5% 50V 0402
2F11	2238 586 59812	100nF 20% 50V 0603
2F12	2238 586 59812	100nF 20% 50V 0603
2F13	2238 586 59812	100nF 20% 50V 0603
2F14	2238 586 59812	100nF 20% 50V 0603
2F15	2238 586 59812	100nF 20% 50V 0603
2F16	2238 586 59812	100nF 20% 50V 0603
2F17	2238 586 59812	100nF 20% 50V 0603
2F18	2238 586 59812	100nF 20% 50V 0603
2F20	2238 586 59812	100nF 20% 50V 0603
2F21	2238 586 59812	100nF 20% 50V 0603
2F23	2238 586 59812	100nF 20% 50V 0603
2F24	2238 586 59812	100nF 20% 50V 0603
2F25	4822 124 23002	10µF 16V
2G00	2238 586 59812	100nF 20% 50V 0603
2G21	2020 552 96618	1nF 10% 50V 0402
2G22	2238 586 59812	100nF 20% 50V 0603
2G23	2238 586 59812	100nF 20% 50V 0603
2G31	2238 586 59812	100nF 20% 50V 0603
2G50	2238 586 59812	100nF 20% 50V 0603
2G51	2238 586 59812	100nF 20% 50V 0603
2G52	2238 586 59812	100nF 20% 50V 0603
2G53	2020 552 96628	10nF 10% 16V 0402
2G54	2238 586 59812	100nF 20% 50V 0603
2G55	2022 552 05679	1µF 10% 16V 0805
2G57	2238 586 59812	100nF 20% 50V 0603
2G83	5322 124 41945	22µF 20% 35V
2G88	2020 552 96628	10nF 10% 16V 0402
2G89	5322 124 41945	22µF 20% 35V
2H01	2238 586 59812	100nF 20% 50V 0603
2H06	2020 552 96618	1nF 10% 50V 0402
2H07	2020 552 96618	1nF 10% 50V 0402
2H08	3198 034 02790	47pF 1% 50V 0402
2H09	3198 034 02790	47pF 1% 50V 0402
2H12	3198 034 02790	47pF 1% 50V 0402
2H15	2238 869 15101	100pF 5% 50V 0402
2H16	2020 552 96618	1nF 10% 50V 0402
2H17	2020 552 96618	1nF 10% 50V 0402
2I00	2238 869 15101	100pF 5% 50V 0402
2I02	4822 124 23002	10µF 16V
2I05	2238 869 15101	100pF 5% 50V 0402
2I06	2238 869 15101	100pF 5% 50V 0402
2I07	2238 869 15101	100pF 5% 50V 0402
2I08	2238 869 15101	100pF 5% 50V 0402
2I09	2238 869 15101	100pF 5% 50V 0402
2I12	2022 552 05679	1µF 10% 16V 0805
2I13	2022 552 05679	1µF 10% 16V 0805
2I14	2022 552 05679	1µF 10% 16V 0805

2I15	2020 552 96618	1nF 10% 50V 0402
2I16	2020 552 96618	1nF 10% 50V 0402
2I19	2238 586 59812	100nF 20% 50V 0603
2I20	2238 586 59812	100nF 20% 50V 0603
2I21	2238 586 59812	100nF 20% 50V 0603
2I22	4822 124 11946	22µF 20% 16V
2I23	2238 586 59812	100nF 20% 50V 0603
2I24	2020 552 96618	1nF 10% 50V 0402
2I31	2238 586 59812	100nF 20% 50V 0603
2I32	2238 586 59812	100nF 20% 50V 0603
2I33	2238 586 59812	100nF 20% 50V 0603
2I34	2238 586 59812	100nF 20% 50V 0603
2I37	2238 586 59812	100nF 20% 50V 0603
2I39	4822 051 30008	Jumper 0603
2I42	2020 552 96618	1nF 10% 50V 0402
2I43	2238 586 59812	100nF 20% 50V 0603
2I44	2020 004 90283	10µF 20% 10V 1206
2I45	2238 586 59812	100nF 20% 50V 0603
2I46	2020 552 96618	1nF 10% 50V 0402
2I47	2238 586 59812	100nF 20% 50V 0603
2I48	2020 004 90283	10µF 20% 10V 1206
2I49	2238 586 59812	100nF 20% 50V 0603
2I54	2238 586 59812	100nF 20% 50V 0603
2I58	2238 586 59812	100nF 20% 50V 0603
2I59	4822 124 12095	100µF 20% 16V
2I60	2020 004 90283	10µF 20% 10V 1206
2I61	2022 552 05679	1µF 10% 16V 0805
2I63	2022 552 05679	1µF 10% 16V 0805
2I70	2238 787 15641	22nF 5% 16V 0402
2I71	4822 124 23002	10µF 16V
2I73	4822 124 23002	10µF 16V
2I87	4822 124 23002	10µF 16V
2I89	4822 124 23002	10µF 16V
2I90	4822 124 12095	100µF 20% 16V
2I91	2238 787 15641	22nF 5% 16V 0402
2I92	2238 787 15641	22nF 5% 16V 0402
2I93	2022 552 05679	1µF 10% 16V 0805
2I94	2238 787 15641	22nF 5% 16V 0402
2I95	4822 124 23002	10µF 16V
2I98	2022 552 05679	1µF 10% 16V 0805
2J00	2238 586 59812	100nF 20% 50V 0603
2J02	3198 035 03320	3.3nF 5% 50V 0402
2J03	3198 035 03320	3.3nF 5% 50V 0402
2J08	4822 126 14324	33pF 5% 50V 0402
2J12	4822 126 14324	33pF 5% 50V 0402
2J13	4822 126 14324	33pF 5% 50V 0402
2J14	3198 035 03320	3.3nF 5% 50V 0402
2J18	4822 126 14324	33pF 5% 50V 0402
2J19	4822 126 14324	33pF 5% 50V 0402
2J20	2238 586 59812	100nF 20% 50V 0603
2J21	3198 032 28210	220µF 20% 6.3V
2J26	2238 586 59812	100nF 20% 50V 0603
2J36	3198 035 03320	3.3nF 5% 50V 0402
2J37	2238 586 59812	100nF 20% 50V 0603
2J38	2022 552 05679	1µF 10% 16V 0805
2J39	3198 035 03320	3.3nF 5% 50V 0402
2J41	3198 035 03320	3.3nF 5% 50V 0402
2J42	3198 035 03320	3.3nF 5% 50V 0402
2J43	3198 035 03320	3.3nF 5% 50V 0402
2J44	3198 035 03320	3.3nF 5% 50V 0402
2J45	3198 035 03320	3.3nF 5% 50V 0402
2J46	2022 552 05679	1µF 10% 16V 0805
2J51	2020 004 90283	10µF 20% 10V 1206
2J52	2238 787 15641	22nF 5% 16V 0402
2J53	2238 787 15641	22nF 5% 16V 0402
2J54	2238 787 15641	22nF 5% 16V 0402
2J59	2238 586 59812	100nF 20% 50V 0603
2J60	2238 586 59812	100nF 20% 50V 0603
2J61	2238 586 59812	100nF 20% 50V 0603
2J62	2238 586 59812	100nF 20% 50V 0603
2J63	2238 586 59812	100nF 20% 50V 0603
2J64	2238 586 59812	100nF 20% 50V 0603
2J65	2238 586 59812	100nF 20% 50V 0603
2J66	2238 586 59812	100nF 20% 50V 0603
2J67	2238 586 59812	100nF 20% 50V 0603
2J68	2238 586 59812	100nF 20% 50V 0603
2J69	2238 586 59812	100nF 20% 50V 0603
2J70	2238 586 59812	100nF 20% 50V 0603
2J71	2238 586 59812	100nF 20% 50V 0603
2J72	2238 586 59812	100nF 20% 50V 0603
2J73	2238 586 59812	100nF 20% 50V 0603
2J74	2238 586 59812	100nF 20% 50V 0603
2J75	2238 586 59812	100nF 20% 50V 0603
2J76	2238 586 59812	100nF 20% 50V 0603
2J77	2238 586 59812	100nF 20% 50V 0603
2J78	2020 004 90283	10µF 20% 10V 1206
2J79	2020 004 90283	10µF 20% 10V 1206
2J80	2238 586 59812	100nF 20% 50V 0603
2J81	2238 787 15641	22nF 5% 16V 0402
2J82	2020 004 90283	10µF 20% 10V 1206
2K00	4822 124 23002	10µF 16V
2K01	2238 787 15641	22nF 5% 16V 0402
2K02	2238 787 15641	22nF 5% 16V 0402
2K03	2238 787 15641	22nF 5% 16V 0402
2K04	2238 787 15641	22nF 5% 16V 0402
2K05	2238 787 15641	22nF 5% 16V 0402
2K06	2238 787 15641	22nF 5% 16V 0402
2K07	2238 787 15641	22nF 5% 16V 0402
2K08	2238 787 15641	22nF 5% 16V 0402
2K09	2238 787 15641	22nF 5% 16V 0402
2K10	2020 004 90283	10µF 20% 10V 1206
2K11	2020 004 90283	10µF 20% 10V 1206
2K12	2238 787 15641	22nF 5% 16V 0402
2K13	2020 004 90283	10µF 20% 10V 1206
2K14	2238 787 15641	22nF 5% 16V 0402
2K15	2238 787 15641	22nF 5% 16V 0402
2K16	2238 787 15641	22nF 5% 16V 0402
2K17	2238 787 15641	22nF 5% 16V 0402
2K18	2238 787 15641	22nF 5% 16V 0402
2K19	2238 787 15641	22nF 5% 16V 0402
2K20	2238 787 15641	22nF 5% 16V 0402
2K21	2238 787 15641	22nF 5% 16V 0402
2K22	2020 004 90283	10µF 20% 10V 1206
2K23	2020 004 90283	10µF 20% 10V 1206
2K24	2238 787 15641	22nF 5% 16V 0402
2K25	2238 869 15101	100pF 5% 50V 0402
2K26	4822 124 23002	10µF 16V
2K27	2238 787 15641	22nF 5% 16V 0402
2K28	4822 117 13548	1kΩ 5% 0402
2K33	2238 787 15641	22nF 5% 16V 0402
2K35	2022 552 05679	1µF 10% 16V 0805
2K36	2022 552 05679	1µF 10% 16V 0805
2K40	2238 586 59812	100nF 20% 50V 0603
2K41	2238 586 59812	100nF 20% 50V 0603
2K42	4822 124 80151	47µF 16V
2K43	2238 586 59812	100nF 20% 50V 0603
2K44	2238 586 59812	100nF 20% 50V 0603
2K45	2238 586 59812	100nF 20% 50V 0603
2K58	2022 552 05679	1µF 10% 16V 0805
2K60	2022 552 05679	1µF 10% 16V 0805
2K61	2022 552 05679	1µF 10% 16V 0805
2K63	2022 552 05679	1µF 10% 16V 0805
2M00	2238 869 15101	100pF 5% 50V 0402
2M01	2238 869 15101	100pF 5% 50V 0402
2M02	2238 869 15101	100pF 5% 50V 0402
2M03	2238 869 15101	100pF 5% 50V 0402
2M04	2238 869 15101	100pF 5% 50V 0402
2M06	2238 869 15101	100pF 5% 50V 0402
2M07	2238 869 15101	100pF 5% 50V 0402
2M08	2238 869 15101	100pF 5% 50V 0402
2M09	2238 869 15101	100pF 5% 50V 0402
2M10	2238 869 15101	100pF 5% 50V 0402
2M11	2020 552 96618	1nF 10% 50V 0402
2M12	2020 552 96618	1nF 10% 50V 0402
2M13	2238 869 15101	100pF 5% 50V 0402
2M16	2020 004 90283	10µF 20% 10V 1206
2M17	2020 004 90283	10µF 20% 10V 1206
2M18	4822 117 13605	Jumper 0402
2M19	2238 869 15101	100pF 5% 50V 0402
2M20	2238 869 15101	100pF 5% 50V 0402
2M21	2238 869 15101	100pF 5% 50V 0402
2M28	4822 117 13605	Jumper 0402
2M29	4822 117 13605	Jumper 0402
2M30	2238 869 15101	100pF 5% 50V 0402
2M31	2238 869 15101	100pF 5% 50V 0402
2M47	2238 869 15101	100pF 5% 50V 0402
2M49	2238 869 15101	100pF 5% 50V 0402
2M50	2238 869 15101	100pF 5% 50V 0402
2M51	2238 869 15101	100pF 5% 50V 0402
2M58	2238 869 15101	100pF 5% 50V 0402
2M59	2238 869 15101	100pF 5% 50V 0402
2M62	2238 869 15101	100pF 5% 50V 0402
2M63	2022 552 05679	1µF 10% 16V 0805
2M64	2022 552 05679	1µF 10% 16V 0805
2M65	2238 869 15101	100pF 5% 50V 0402
2M66	2238 869 15101	100pF 5% 50V 0402
2M67	2238 869 15101	100pF 5% 50V 0402
2M68	2238 869 15101	100pF 5% 50V 0402
2M69	2238 869 15101	100pF 5% 50V 0402
2M70	2238 869 15101	100pF 5% 50V 0402
2M71	2238 869 15101	100pF 5% 50V 0402
2M72	2238 586 59812	100nF 20% 50V 0603
2M73	2238 586 59812	100nF 20% 50V 0603
2M74	2238 586 59812	100nF 20% 50V 0603
2M75	2238 586 59812	100nF 20% 50V 0603
2M76	2238 586 59812	100nF 20% 50V 0603
2M77	2238 586 59812	100nF 20% 50V 0603
2M78	2238 586 59812	100nF 20% 50V 0603
2M80	2238 586 59812	100nF 20% 50V 0603
2M81	2238 586 59812	100nF 20% 50V 0603
2M82	2238 586 59812	100nF 20% 50V 0603
2M85	2238 586 59812	100nF 20% 50V 0603
2N20	2022 552 05679	1µF 10% 16V 0805
2N21	2238 586 59812	100nF 20% 50V 0603
2N22	2238 586 59812	100nF 20% 50V 0603
2N23	2238 787 15641	22nF 5% 16V 0402
2N31	2238 787 15641	22nF 5% 16V 0402
2N32	2238 787 15641	22nF 5% 16V 0402
2N33	2238 787 15641	22nF 5% 16V 0402
2N34	2238 787 15641	22nF 5% 16V 0402
2N40	2238 586 59812	100nF 20% 50V 0603
2N41	3198 032 55130	10µF 20% 20V
2N42	2022 552 05679	1µF 10% 16V 0805
2N43	2022 552 05679	1µF 10% 16V 0805
2N60	2022 552 05679	1µF 10% 16V 0805
2N61	2022 552 05679	1µF 10% 16V 0805
2N62	2022 552 05679	1µF 10% 16V 0805
2N63	2238 586 59812	100nF 20% 50V 0603
2N64	2022 552 05679	1µF 10% 16V 0805
2N65	2238 586 59812	100nF 20% 50V 0603
2N66	2022 552 05679	1µF 10% 16V 0805
2N68	2238 586 59812	100nF 20% 50V 0603
2N69	2022 552 05679	1µF 10% 16V 0805
2N70	2022 552 05679	1µF 10% 16V 0805
2N71	2022 552 05679	1µF 10% 16V 0805
2N72	2022 552 05679	1µF 10% 16V 0805
2N73	2022 552 05679	1µF 10% 16V 0805
2Q00	4822 124 11946	22µF 20% 16V
2Q01	4822 124 11946	22µF 20% 16V
2Q02	4822 124 11946	22µF 20% 16V
2Q03	4822 124 11946	22µF 20% 16V
2Q04	2238 586 59812	100nF 20% 50V 0603
2Q05	2238 586 59812	100nF 20% 50V 0603
2Q06	2238 586 59812	100nF 20% 50V 0603
2Q07	2238 586 59812	100nF 20% 50V 0603
2Q08	2238 586 59812	100nF 20% 50V 0603
2Q09	2238 586 59812	100nF 20% 50V 0603
2Q10	2238 586 59812	100nF 20% 50V 0603
2Q11	2238 586 59812	100nF 20% 50V 0603
2Q12	2238 586 59812	100nF 20% 50V 0603
2Q13	2238 586 59812	100nF 20% 50V 0603
2Q14	2238 586 59812	100nF 20% 50V 0603
2Q15	2238 586 59812	100nF 20% 50V 0603
2Q16	2238 586 59812	100nF 20% 50V 0603
2Q17	2238 586 59812	100nF 20% 50V 0603
2Q18	2238 586 59812	100nF 20% 50V 0603
2Q19	2238 586 59812	100nF 20% 50V 0603
2Q20	4822 124 11946	22µF 20% 16V
2Q21	4822 124 11946	22µF 20% 16V
2Q22	4822 124 11946	22µF 20% 16V
2Q23	4822 124 11946	22µF 20% 16V
2Q24	2238 586 59812	100nF 20% 50V 0603
2Q25	3198 034 01290	12pF 1% 50V 0402
2Q26	2238 586 59812	100nF 20% 50V 0603
2Q27	2238 586 59812	100nF 20% 50V 0603
2Q28	2238 586 59812	100nF 20% 50V 0603
2Q29	2238 869 15101	100pF 5% 50V 0402
2Q30	2238 586 59812	100nF 20% 50V 0603
2Q31	2238 587 15619	560pF 10% 50V 0402
2Q32	2238 586 59812	100nF 20% 50V 0603
2Q33	2238 586 59812	100nF 20% 50V 0603
2Q34	2238 586 59812	100nF 20% 50V 0603
2Q35	2238 586 59812	100nF 20% 50V 0603
2Q37	2238 586 59812	100nF 20% 50V 0603
2Q38	2238 586 59812	100nF 20% 50V 0603
2Q39	2238 586 59812	100nF 20% 50V 0603
2Q40	4822 124 11946	22µF 20% 16V
2Q41	4822 124 11946	22µF 20% 16V
2Q42	4822 124 11946	22µF 20% 16V
2Q43	4822 124 11946	22µF 20% 16V
2Q44	2238 586 59812	100nF 20% 50V 0603
2Q45	2238 586 59812	100nF 20% 50V 0603
2Q46	2238 586 59812	100nF 20% 50V 0603
2Q47	2238 586 59812	100nF 20% 50V 0603
2Q48	2238 586 59812	100nF 20% 50V 0603
2Q49	2238 586 59812	100nF 20% 50V 0603
2Q50	2238 586 59812	100nF 20% 50V 0603
2Q51	2238 586 59812	100nF 20% 50V 0603
2Q52	2238 586 59812	100nF 20% 50V 0603
2Q53	2238 586 59812	100nF 20% 50V 0603
2Q54	2238 586 59812	100nF 20% 50V 0603
2Q55	2238 586 59812	100nF 20% 50V 0603
2Q56	2238 586 59812	100nF 20% 50V 0603
2Q57	2238 586 59812	100nF 20% 50V 0603
2Q58	2238 586 59812	100nF 20% 50V 0603
2Q59	2238 586 59812	100nF 20% 50V 0603
2Q63	2238 586 59812	100nF 20% 50V 0603
2Q64	2238 586 59812	100nF 20% 50V 0603
2Q65	2238 586 59812	100nF 20% 50V 0603
2Q66	2238 586 59812	100nF 20% 50V 0603
2Q67	2238 586 59812	100nF 20% 50V 0603
2Q69	3198 032 47170	47µF 20% 16V
2Q70	3198 032 47170	47µF 20% 16V
2Q71	2238 586 59812	100nF 20% 50V 0603
2Q72	2020 552 96618	1nF 10% 50V 0402
2Q73	2238 869 15101	100pF 5% 50V 0402
2T01	2020 552 96683	220nF 10% 50V
2T02	2020 552 96628	10nF 10% 16V 0402
2T04	2020 552 96628	10nF 10% 16V 0402
2T05	2020 552 96628	10nF 10% 16V 0402
2T08	2020 552 96683	220nF 10% 50V
2T10	2238 869 75829	82pF 5% 50V 0402

2T11	3198 032 28210	220µF 20% 6.3V
2T12	2020 552 96628	10nF 10% 16V 0402
2T13	2238 869 75829	82pF 5% 50V 0402
2T18	2020 004 90283	10µF 20% 10V 1206
2U01	2020 552 96618	1nF 10% 50V 0402
2U02	2238 586 59812	100nF 20% 50V 0603
2U03	2238 586 59812	100nF 20% 50V 0603
2U04	2238 586 59812	100nF 20% 50V 0603
2U05	2020 552 96618	1nF 10% 50V 0402
2U06	2238 586 59812	100nF 20% 50V 0603
2U07	2238 586 59812	100nF 20% 50V 0603
2U08	3198 035 04710	470pF 50V 0402
2U09	2238 586 59812	100nF 20% 50V 0603
2U10	2020 552 96618	1nF 10% 50V 0402
2U11	2238 586 59812	100nF 20% 50V 0603
2U12	2238 586 59812	100nF 20% 50V 0603
2U13	3198 035 04710	470pF 50V 0402
2U14	2020 552 96618	1nF 10% 50V 0402
2U15	2238 586 59812	100nF 20% 50V 0603
2U16	2020 552 96618	1nF 10% 50V 0402
2U17	2238 586 59812	100nF 20% 50V 0603
2U18	2238 586 59812	100nF 20% 50V 0603
2U19	2020 552 96684	470nF 10% 25V 0805
2U20	2238 586 59812	100nF 20% 50V 0603
2U21	2238 586 59812	100nF 20% 50V 0603
2U22	2022 552 05679	1µF 10% 16V 0805
2U23	2022 552 05679	1µF 10% 16V 0805
2U24	2022 552 05679	1µF 10% 16V 0805
2U25	2020 552 96628	10nF 10% 16V 0402
2U26	2020 552 96628	10nF 10% 16V 0402
2U27	2020 552 96628	10nF 10% 16V 0402
2U28	2238 586 59812	100nF 20% 50V 0603
2U29	2020 552 96618	1nF 10% 50V 0402
2U30	3198 035 04710	470pF 50V 0402
2U40	2022 552 05679	1µF 10% 16V 0805
2U41	2022 552 05679	1µF 10% 16V 0805
2U42	2020 552 96684	470nF 10% 25V 0805
2U43	2020 552 96628	10nF 10% 16V 0402
2U44	2020 552 96628	10nF 10% 16V 0402
2U45	2020 552 96628	10nF 10% 16V 0402
2U46	2238 586 59812	100nF 20% 50V 0603
2U47	2020 552 96618	1nF 10% 50V 0402
2U50	2022 552 05679	1µF 10% 16V 0805
2U52	2238 787 15641	22nF 5% 16V 0402
2U53	2238 787 15641	22nF 5% 16V 0402
2U54	2020 552 96623	2.2nF 10% 50V 0402
2U55	2020 552 96628	10nF 10% 16V 0402
2U56	2020 552 96628	10nF 10% 16V 0402
2U57	2020 552 96628	10nF 10% 16V 0402
2U58	2022 552 05679	1µF 10% 16V 0805
2U59	5322 124 41945	22µF 20% 35V
2U60	5322 124 41945	22µF 20% 35V
2U61	5322 124 41945	22µF 20% 35V
2U62	2022 552 05635	22µF 10% 16V
2U63	2022 552 05635	22µF 10% 16V
2U66	2022 552 05635	22µF 10% 16V
2U67	2022 552 05635	22µF 10% 16V
2U69	2022 552 05635	22µF 10% 16V
2U70	2022 552 05635	22µF 10% 16V
2U71	2238 586 59812	100nF 20% 50V 0603
2U72	2020 552 96618	1nF 10% 50V 0402
2U73	2020 552 96618	1nF 10% 50V 0402
2U74	2020 552 96618	1nF 10% 50V 0402
2U75	2020 552 96618	1nF 10% 50V 0402
2U76	2020 552 96618	1nF 10% 50V 0402
2U77	2020 552 96618	1nF 10% 50V 0402
2U78	2020 552 96618	1nF 10% 50V 0402
2U79	2022 552 05635	22µF 10% 16V
2U80	2022 552 05635	22µF 10% 16V
2U81	2022 552 05635	22µF 10% 16V
2U87	2022 552 05679	1µF 10% 16V 0805
2U88	2238 586 59812	100nF 20% 50V 0603
2U90	2020 552 96623	2.2nF 10% 50V 0402
2U91	2020 552 96623	2.2nF 10% 50V 0402
2U92	2020 552 96623	2.2nF 10% 50V 0402
2V00	2238 586 59812	100nF 20% 50V 0603
2V01	2238 586 59812	100nF 20% 50V 0603
2V02	2238 586 59812	100nF 20% 50V 0603
2V03	2238 586 59812	100nF 20% 50V 0603
2V04	2022 029 00632	330µF 20% 6.3V
2V15	4822 124 11946	22µF 20% 16V
2V16	2238 586 59812	100nF 20% 50V 0603
2V17	2238 586 59812	100nF 20% 50V 0603
2V18	2238 586 59812	100nF 20% 50V 0603
2V19	2238 586 59812	100nF 20% 50V 0603
2V20	2238 586 59812	100nF 20% 50V 0603
2V21	2238 586 59812	100nF 20% 50V 0603
2V22	2238 586 59812	100nF 20% 50V 0603
2V23	2238 586 59812	100nF 20% 50V 0603
2V24	2238 586 59812	100nF 20% 50V 0603
2V25	2238 586 59812	100nF 20% 50V 0603
2V26	2238 586 59812	100nF 20% 50V 0603
2V27	2238 586 59812	100nF 20% 50V 0603
2V28	2238 586 59812	100nF 20% 50V 0603
2V29	2238 586 59812	100nF 20% 50V 0603
2V30	2238 586 59812	100nF 20% 50V 0603
2V31	2238 586 59812	100nF 20% 50V 0603
2V32	2238 586 59812	100nF 20% 50V 0603
2V33	2238 586 59812	100nF 20% 50V 0603
2V35	2238 586 59812	100nF 20% 50V 0603
2V36	2020 552 96618	1nF 10% 50V 0402
2V37	2238 869 15101	100pF 5% 50V 0402

–WW–

3C31▲	5322 117 11726	10Ω 5%
3C32	3198 031 01820	1.8kΩ 5% 0.01W 0402
3C34	3198 031 01220	1.2kΩ 5% 0.01W 0402
3C39	4822 117 13545	100Ω 1% 0402
3C40	4822 117 13545	100Ω 1% 0402
3C50	3198 031 04720	4.7kΩ 5% 0402
3C53	3198 031 03910	390Ω 1% 0402
3C56	3198 031 06820	6.8kΩ 5% 0.01W 0402
3C57	4822 117 13602	2.2kΩ 5% 0.01W 0402
3C60	3198 031 02730	27kΩ 5% 0402
3C62	3198 031 04720	4.7kΩ 5% 0402
3C63	4822 117 13545	100Ω 1% 0402
3C64	3198 031 01830	18kΩ 5% 0.01W 0402
3C65	3198 031 04720	4.7kΩ 5% 0402
3C67	3198 031 04720	4.7kΩ 5% 0402
3C78	3198 031 04730	47Ω 5% 0402
3C80	4822 117 13602	2.2kΩ 5% 0.01W 0402
3C82	3198 031 01810	180Ω 5% 0402
3C83	4822 117 13545	100Ω 1% 0402
3C84	3198 031 02710	270Ω 5% 0.1W 0402
3C85	4822 117 13596	220Ω 5% 0.01W 0402
3C87▲	4822 117 11748	Fuse 2.2Ω 5% 1206
3D20	4822 117 13606	10kΩ 5% 0.01W 0402
3D21	4822 117 13606	10kΩ 5% 0.01W 0402
3D22	4822 117 13606	10kΩ 5% 0.01W 0402
3D23	4822 117 13545	100Ω 1% 0402
3D24	3198 031 04730	47Ω 5% 0402
3D25▲	5322 117 11726	10Ω 5%
3D26	4822 117 13548	1kΩ 5% 0402
3D27	4822 051 30109	10Ω 5% 0.062W
3D28	4822 051 30109	10Ω 5% 0.062W
3D29	4822 117 11297	100kΩ 5% 0.1W
3D30	4822 117 13613	2.2Ω 5% 0603
3D31	3198 031 06820	6.8kΩ 5% 0.01W 0402
3D32	4822 117 13548	1kΩ 5% 0402
3D33	4822 117 13606	10kΩ 5% 0.01W 0402
3D34	2322 706 71002	1kΩ 1% 0402
3D35	2322 706 73902	3.9kΩ 1% 0402
3D36	3198 031 02720	2.7kΩ 5% 0.01W 0402
3D37	3198 031 04720	4.7kΩ 5% 0402
3D38	4822 117 13548	1kΩ 5% 0402
3D39	3198 031 04720	4.7kΩ 5% 0402
3D40	4822 117 13606	10kΩ 5% 0.01W 0402
3D41	4822 117 13606	10kΩ 5% 0.01W 0402
3D42	4822 117 13606	10kΩ 5% 0.01W 0402
3D80	4822 051 20478	4.7Ω 5% 0.1W
3D81	4822 117 13548	1kΩ 5% 0402
3D82	4822 117 13606	10kΩ 5% 0.01W 0402
3D83	3198 031 04740	470kΩ 5% 0402
3D84	4822 117 13606	10kΩ 5% 0.01W 0402
3D85	4822 117 13606	10kΩ 5% 0.01W 0402
3D86	3198 031 04730	47Ω 5% 0402
3D87	4822 117 13606	10kΩ 5% 0.01W 0402
3D88	4822 117 13606	10kΩ 5% 0.01W 0402
3D89	4822 051 30101	100Ω 5% 0.062W
3E00	4822 117 13602	2.2kΩ 5% 0.01W 0402
3E01	4822 117 13606	10kΩ 5% 0.01W 0402
3E02	3198 031 04730	47Ω 5% 0402
3E03	3198 031 04730	47Ω 5% 0402
3E04	4822 117 13545	100Ω 1% 0402
3E05	4822 117 13545	100Ω 1% 0402
3E06	3198 031 04720	4.7kΩ 5% 0402
3E07	3198 031 04720	4.7kΩ 5% 0402
3E08	4822 117 13545	100Ω 1% 0402
3E09	4822 117 13545	100Ω 1% 0402
3E10	3198 031 04720	4.7kΩ 5% 0402
3E11	3198 031 04720	4.7kΩ 5% 0402
3E12	3198 031 04720	4.7kΩ 5% 0402
3E13	3198 031 03390	33Ω 1% 0402
3E14	3198 031 03390	33Ω 1% 0402
3E15	4822 117 13545	100Ω 1% 0402
3E16	4822 117 13545	100Ω 1% 0402
3E17	3198 031 03920	3.9kΩ 5% 0402
3E18	3198 031 03320	3.3kΩ 5% 0402
3E19	3198 031 08220	8.2kΩ 5% 0.5W
3E20	4822 117 11297	100kΩ 5% 0.1W
3E21	4822 117 11297	100kΩ 5% 0.1W
3E22	3198 031 06840	680kΩ 5% 0.01W 0402
3E25	4822 051 30101	100Ω 5% 0.062W
3E26	4822 051 30102	1kΩ 5% 0.062W
3E27	4822 117 11297	100kΩ 5% 0.1W
3E28	4822 051 30101	100Ω 5% 0.062W
3E29	4822 051 30102	1kΩ 5% 0.062W
3E30	4822 117 11297	100kΩ 5% 0.1W
3E31	4822 051 30101	100Ω 5% 0.062W
3E32	4822 051 30759	75Ω 5% 0.062W
3E33	5322 117 13056	8.2kΩ 1% 0.063W 0603
3E34	3198 031 03320	3.3kΩ 5% 0402
3E35	4822 051 30101	100Ω 5% 0.062W
3E36	4822 051 30759	75Ω 5% 0.062W
3E37	4822 051 30101	100Ω 5% 0.062W
3E38	4822 051 30759	75Ω 5% 0.062W
3E39	4822 051 30101	100Ω 5% 0.062W
3E40	4822 051 30759	75Ω 5% 0.062W
3E41	4822 051 30759	75Ω 5% 0.062W
3E42	4822 117 11297	100kΩ 5% 0.1W
3E43	4822 051 30101	100Ω 5% 0.062W
3E44	4822 051 30759	75Ω 5% 0.062W
3E45	4822 117 13606	10kΩ 5% 0.01W 0402
3E46	4822 117 11297	100kΩ 5% 0.1W
3E47	3198 031 04730	47Ω 5% 0402
3E48	3198 031 04730	47Ω 5% 0402
3E51	4822 117 13545	100Ω 1% 0402
3E52	4822 117 13545	100Ω 1% 0402
3E54	3198 031 04720	4.7kΩ 5% 0402
3E55	3198 031 04720	4.7kΩ 5% 0402
3E56	2350 033 11339	4 x 33Ω 5%
3E57	2350 033 11339	4 x 33Ω 5%
3E58	2350 033 11339	4 x 33Ω 5%
3E59	2350 033 11339	4 x 33Ω 5%
3E60	2350 033 11339	4 x 33Ω 5%
3E61	3198 031 03390	33Ω 1% 0402
3E62	4822 117 13545	100Ω 1% 0402
3E63	4822 117 13548	1kΩ 5% 0402
3E64	3198 031 01510	150Ω 5% 0.01W 0402
3E65	4822 117 13596	220Ω 5% 0.01W 0402
3E66	4822 117 13606	10kΩ 5% 0.01W 0402
3E67	3198 031 02240	220kΩ 5% 0.1W 0402
3E68	4822 117 11297	100kΩ 5% 0.1W
3E69	4822 117 13606	10kΩ 5% 0.01W 0402
3E71	4822 117 13548	1kΩ 5% 0402
3E72	3198 031 01510	150Ω 5% 0.01W 0402
3E73	4822 117 13596	220Ω 5% 0.01W 0402
3E74	4822 117 13606	10kΩ 5% 0.01W 0402
3E75	3198 031 02240	220kΩ 5% 0.1W 0402
3E76	3198 031 03390	33Ω 1% 0402
3E77	3198 031 03390	33Ω 1% 0402
3E78	3198 031 03390	33Ω 1% 0402
3E79	4822 117 13545	100Ω 1% 0402
3E80	2322 706 73901	390Ω 1% 0402
3E81	3198 031 03390	33Ω 1% 0402
3E82	3198 031 03390	33Ω 1% 0402
3E84	3198 031 04720	4.7kΩ 5% 0402
3E85	4822 117 13602	2.2kΩ 5% 0.01W 0402
3E86	4822 117 13605	Jumper 0402
3E88	4822 117 13545	100Ω 1% 0402
3E89	4822 117 13545	100Ω 1% 0402
3E90	4822 117 13545	100Ω 1% 0402
3E91	4822 117 13545	100Ω 1% 0402
3E95	4822 117 13606	10kΩ 5% 0.01W 0402
3E96	4822 117 13606	10kΩ 5% 0.01W 0402
3E98	4822 117 13545	100Ω 1% 0402
3E99	4822 117 13545	100Ω 1% 0402
3EA0	8204 000 77491	VDR 90V 1mA 0402
3EA1	4822 117 13548	1kΩ 5% 0402
3EA2	4822 117 13548	1kΩ 5% 0402
3EA3	8204 000 77491	VDR 90V 1mA 0402
3EA4	8204 000 77491	VDR 90V 1mA 0402
3EA5	8204 000 77491	VDR 90V 1mA 0402
3EA6	8204 000 77491	VDR 90V 1mA 0402
3EA7	8204 000 77491	VDR 90V 1mA 0402
3EA8	8204 000 77491	VDR 90V 1mA 0402
3EA9	8204 000 77491	VDR 90V 1mA 0402
3F00	2350 033 10101	4 x 100Ω 5%
3F01	2350 033 10101	4 x 100Ω 5%
3F02	2350 033 10101	4 x 100Ω 5%
3F03	2350 033 10101	4 x 100Ω 5%
3F04	2350 033 10101	4 x 100Ω 5%
3F05	2350 033 10101	4 x 100Ω 5%
3F06	2350 033 10101	4 x 100Ω 5%
3F07	2350 033 10101	4 x 100Ω 5%
3F08	2350 033 10101	4 x 100Ω 5%
3F09	2350 033 10101	4 x 100Ω 5%
3F10	2350 033 11339	4 x 33Ω 5%
3F11	3198 031 05610	560Ω 5% 0.01W 0402
3F12	4822 117 13545	100Ω 1% 0402
3F13	3198 031 04720	4.7kΩ 5% 0402
3F14	3198 031 04720	4.7kΩ 5% 0402
3F15	4822 117 13606	10kΩ 5% 0.01W 0402
3F17	4822 117 13606	10kΩ 5% 0.01W 0402
3F22	4822 117 13545	100Ω 1% 0402
3F23	4822 117 13548	1kΩ 5% 0402
3F24	4822 117 13602	2.2kΩ 5% 0.01W 0402
3F25	4822 117 13545	100Ω 1% 0402
3F26	4822 117 13545	100Ω 1% 0402
3F27	3198 031 04720	4.7kΩ 5% 0402

3F28	4822 117 13545	100Ω 1% 0402
3F29	4822 117 13545	100Ω 1% 0402
3F30	3198 031 04720	4.7kΩ 5% 0402
3F31	4822 117 13545	100Ω 1% 0402
3F32	3198 031 04720	4.7kΩ 5% 0402
3F33	3198 031 04720	4.7kΩ 5% 0402
3F34	4822 117 13545	100Ω 1% 0402
3F35	3198 031 04720	4.7kΩ 5% 0402
3F36	4822 117 13545	100Ω 1% 0402
3F37	4822 117 13545	100Ω 1% 0402
3F38	3198 031 04720	4.7kΩ 5% 0402
3F39	4822 117 13545	100Ω 1% 0402
3F40	4822 117 13545	100Ω 1% 0402
3F41	4822 117 13545	100Ω 1% 0402
3F42	4822 117 13602	2.2kΩ 5% 0.01W 0402
3F43	4822 117 13602	2.2kΩ 5% 0.01W 0402
3F44	4822 117 13606	10kΩ 5% 0.01W 0402
3F45	4822 117 13545	100Ω 1% 0402
3F46	4822 117 13545	100Ω 1% 0402
3F47	4822 117 13606	10kΩ 5% 0.01W 0402
3F49	4822 117 13548	1kΩ 5% 0402
3F50	3198 031 04720	4.7kΩ 5% 0402
3F51	3198 031 04720	4.7kΩ 5% 0402
3F52	3198 031 04720	4.7kΩ 5% 0402
3F53	3198 031 04720	4.7kΩ 5% 0402
3F55	3198 031 04720	4.7kΩ 5% 0402
3F56	3198 031 04720	4.7kΩ 5% 0402
3F57	3198 031 05610	560Ω 5% 0.01W 0402
3F58	4822 117 13545	100Ω 1% 0402
3F59	4822 117 13545	100Ω 1% 0402
3F60	4822 117 13606	10kΩ 5% 0.01W 0402
3F61	4822 117 13606	10kΩ 5% 0.01W 0402
3F62	4822 117 13545	100Ω 1% 0402
3F63	4822 117 13545	100Ω 1% 0402
3F64	3198 031 08220	8.2kΩ 5% 0.5W
3F65	3198 031 03930	39kΩ 5% 0402
3F66	3198 031 04720	4.7kΩ 5% 0402
3F68	3198 031 04720	4.7kΩ 5% 0402
3F70	3198 031 04720	4.7kΩ 5% 0402
3F71	3198 031 04720	4.7kΩ 5% 0402
3F72	3198 031 04720	4.7kΩ 5% 0402
3F73	3198 031 04720	4.7kΩ 5% 0402
3F74	3198 031 04720	4.7kΩ 5% 0402
3F75	3198 031 04720	4.7kΩ 5% 0402
3F82	4822 117 13545	100Ω 1% 0402
3F83	4822 117 13545	100Ω 1% 0402
3F84	4822 117 13606	10kΩ 5% 0.01W 0402
3F85	4822 117 13606	10kΩ 5% 0.01W 0402
3F86	4822 117 13545	100Ω 1% 0402
3F87	4822 117 13545	100Ω 1% 0402
3F88	4822 117 13545	100Ω 1% 0402
3F89	4822 117 13548	1kΩ 5% 0402
3F90	4822 117 13545	100Ω 1% 0402
3F91	4822 117 13545	100Ω 1% 0402
3F92	4822 117 13606	10kΩ 5% 0.01W 0402
3F97	4822 117 13606	10kΩ 5% 0.01W 0402
3F98	4822 117 13606	10kΩ 5% 0.01W 0402
3F99	4822 117 13606	10kΩ 5% 0.01W 0402
3G14	4822 117 13548	1kΩ 5% 0402
3G19	4822 117 13548	1kΩ 5% 0402
3G29	4822 117 13546	47Ω 5% 0402
3G30	4822 117 13606	10kΩ 5% 0.01W 0402
3G33	4822 117 13606	10kΩ 5% 0.01W 0402
3G34	4822 117 13601	22kΩ 5% 0402
3G37	4822 117 13602	2.2kΩ 5% 0.01W 0402
3G47	4822 117 13606	10kΩ 5% 0.01W 0402
3G53	4822 117 13605	Jumper 0402
3G71	4822 117 13606	10kΩ 5% 0.01W 0402
3G72	4822 117 13606	10kΩ 5% 0.01W 0402
3G73	4822 117 13606	10kΩ 5% 0.01W 0402
3G75	4822 117 13606	10kΩ 5% 0.01W 0402
3G76	4822 117 13602	2.2kΩ 5% 0.01W 0402
3G77	4822 117 13606	10kΩ 5% 0.01W 0402
3G78	4822 117 13546	47Ω 5% 0402
3H00	3198 031 04720	4.7kΩ 5% 0402
3H01	3198 031 04720	4.7kΩ 5% 0402
3H02	3198 031 04720	4.7kΩ 5% 0402
3H03	3198 031 04720	4.7kΩ 5% 0402
3H04	3198 031 04720	4.7kΩ 5% 0402
3H05	4822 117 13606	10kΩ 5% 0.01W 0402
3H07	3198 031 03390	33Ω 1% 0402
3H08	3198 031 04720	4.7kΩ 5% 0402
3H09	3198 031 04720	4.7kΩ 5% 0402
3H10	3198 031 04720	4.7kΩ 5% 0402
3H11	3198 031 04720	4.7kΩ 5% 0402
3H12	4822 117 13605	Jumper 0402
3H13	3198 031 04720	4.7kΩ 5% 0402
3H14	4822 117 13605	Jumper 0402
3H15	3198 031 04720	4.7kΩ 5% 0402
3H16	3198 031 04720	4.7kΩ 5% 0402
3H17	4822 117 13606	10kΩ 5% 0.01W 0402
3H18	3198 031 04720	4.7kΩ 5% 0402
3H19	4822 117 13548	1kΩ 5% 0402
3H20	2322 705 70399	39Ω 5% 0402
3H21	2322 705 70399	39Ω 5% 0402
3H22	3198 031 06890	68Ω 5% 0402
3H23	3198 031 06890	68Ω 5% 0402
3H24	3198 031 06890	68Ω 5% 0402
3H25	3198 031 06890	68Ω 5% 0402
3H27	3198 031 06890	68Ω 5% 0402
3H28	3198 031 04720	4.7kΩ 5% 0402
3H31	3198 031 04720	4.7kΩ 5% 0402
3H32	3198 031 04720	4.7kΩ 5% 0402
3H33	2350 033 11479	4x 47Ω 5%
3H34	2350 033 11479	4x 47Ω 5%
3H35	2350 033 11479	4x 47Ω 5%
3H36	2350 033 11479	4x 47Ω 5%
3H37	2350 033 11479	4x 47Ω 5%
3H38	2350 033 11479	4x 47Ω 5%
3H39	2350 033 11479	4x 47Ω 5%
3H40	2350 033 11479	4x 47Ω 5%
3H41	3198 031 03390	33Ω 1% 0402
3H45	4822 117 13546	47Ω 5% 0402
3H46	4822 117 13546	47Ω 5% 0402
3H47	4822 117 13546	47Ω 5% 0402
3H65	3198 031 03390	33Ω 1% 0402
3H66	3198 031 03390	33Ω 1% 0402
3H67	3198 031 06890	68Ω 5% 0402
3H70	3198 031 04720	4.7kΩ 5% 0402
3H72	4822 117 13545	100Ω 1% 0402
3H73	3198 031 02290	22Ω 5% 0.1W 0402
3H74	3198 031 02290	22Ω 5% 0.1W 0402
3H75	4822 117 13545	100Ω 1% 0402
3H76	3198 031 06890	68Ω 5% 0402
3H77	3198 031 06890	68Ω 5% 0402
3H78	4822 117 13605	Jumper 0402
3H79	3198 031 02290	22Ω 5% 0.1W 0402
3H80	4822 117 13605	Jumper 0402
3H81	4822 117 13605	Jumper 0402
3H82	3198 031 01050	1MΩ 5% 0402
3H83	3198 031 04720	4.7kΩ 5% 0402
3H84	3198 031 04720	4.7kΩ 5% 0402
3H85	3198 031 04720	4.7kΩ 5% 0402
3H86	3198 031 04720	4.7kΩ 5% 0402
3H87	3198 031 04720	4.7kΩ 5% 0402
3H88	3198 031 04720	4.7kΩ 5% 0402
3H90	3198 031 04720	4.7kΩ 5% 0402
3H92	3198 031 07590	75Ω 5% 0402
3H93	3198 031 04720	4.7kΩ 5% 0402
3H94	3198 031 04720	4.7kΩ 5% 0402
3H95	4822 117 13597	330Ω 5% 0402 0.01W
3H96	4822 117 13605	Jumper 0402
3H97	3198 031 04720	4.7kΩ 5% 0402
3H98	4822 117 13545	100Ω 1% 0402
3H99	4822 117 13545	100Ω 1% 0402
3I01	4822 117 11297	100kΩ 5% 0.1W
3I02	4822 117 11297	100kΩ 5% 0.1W
3I03	4822 117 13545	100Ω 1% 0402
3I04	3198 031 07590	75Ω 5% 0402
3I05	4822 117 13596	220Ω 5% 0.01W 0402
3I06	4822 051 30101	100Ω 5% 0.062W
3I07	4822 117 11297	100kΩ 5% 0.1W
3I08	4822 051 30101	100Ω 5% 0.062W
3I09	4822 117 11297	100kΩ 5% 0.1W
3I10	3198 031 08230	82kΩ 5% 0402
3I11	3198 031 03920	3.9kΩ 5% 0402
3I12	3198 031 05630	56kΩ 5% 0402
3I13	3198 031 02290	22Ω 5% 0.1W 0402
3I14	4822 117 13548	1kΩ 5% 0402
3I15	3198 031 01820	1.8kΩ 5% 0.01W 0402
3I16	3198 031 01210	120Ω 5% 0.01W 0402
3I19	3198 031 02730	27kΩ 5% 0402
3I22	4822 051 30102	1kΩ 5% 0.062W
3I23	4822 117 11297	100kΩ 5% 0.1W
3I24	4822 051 30102	1kΩ 5% 0.062W
3I25	4822 051 30102	1kΩ 5% 0.062W
3I26	4822 117 11297	100kΩ 5% 0.1W
3I27	3198 031 01510	150Ω 5% 0.01W 0402
3I28	4822 051 30102	1kΩ 5% 0.062W
3I43	4822 117 13545	100Ω 1% 0402
3I44	4822 117 13545	100Ω 1% 0402
3I45	4822 117 13545	100Ω 1% 0402
3I50	4822 117 13601	22kΩ 5% 0402
3I51	3198 031 04730	47Ω 5% 0402
3I52	3198 031 06890	68Ω 5% 0402
3I57	3198 031 06890	68Ω 5% 0402
3I58⚠	4822 117 11748	Fuse 2.2Ω 5% 1206
3I66	4822 117 13548	1kΩ 5% 0402
3I67	4822 117 13545	100Ω 1% 0402
3I68	4822 117 13545	100Ω 1% 0402
3I71	3198 031 01510	150Ω 5% 0.01W 0402
3I72	4822 117 13548	1kΩ 5% 0402
3I73	3198 031 01510	150Ω 5% 0.01W 0402
3I74	4822 117 13548	1kΩ 5% 0402
3I87	3198 031 01510	150Ω 5% 0.01W 0402
3I88	4822 117 13548	1kΩ 5% 0402
3I89	3198 031 01510	150Ω 5% 0.01W 0402
3I90	4822 117 13548	1kΩ 5% 0402
3I91	3198 031 04730	47Ω 5% 0402
3J01	4822 117 13605	Jumper 0402
3J02	3198 031 04730	47Ω 5% 0402
3J04	3198 031 01830	18kΩ 5% 0.01W 0402
3J07	4822 117 13601	22kΩ 5% 0402
3J08	3198 031 04730	47Ω 5% 0402
3J10	3198 031 01830	18kΩ 5% 0.01W 0402
3J18	3198 031 04730	47Ω 5% 0402
3J19	4822 117 13601	22kΩ 5% 0402
3J20	3198 031 04730	47Ω 5% 0402
3J21	3198 031 04730	47Ω 5% 0402
3J23	4822 117 13601	22kΩ 5% 0402
3J24	3198 031 04730	47Ω 5% 0402
3J27	4822 117 13601	22kΩ 5% 0402
3J28	4822 117 13603	33kΩ 5% 0402
3J29	4822 117 13603	33kΩ 5% 0402
3J33	4822 117 13606	10kΩ 5% 0.01W 0402
3J40	3198 031 06890	68Ω 5% 0402
3J50	4822 117 13545	100Ω 1% 0402
3J51	4822 117 13545	100Ω 1% 0402
3J52	4822 117 13545	100Ω 1% 0402
3J53	4822 117 13545	100Ω 1% 0402
3J54	4822 117 13545	100Ω 1% 0402
3J55	4822 117 13545	100Ω 1% 0402
3J56	4822 117 13545	100Ω 1% 0402
3J57	4822 117 13545	100Ω 1% 0402
3J58	4822 117 13545	100Ω 1% 0402
3J59	4822 117 13545	100Ω 1% 0402
3J60	4822 117 13545	100Ω 1% 0402
3J61	4822 117 13545	100Ω 1% 0402
3J62	4822 117 13545	100Ω 1% 0402
3J63	4822 117 13545	100Ω 1% 0402
3J64	4822 117 13545	100Ω 1% 0402
3J65	4822 117 13545	100Ω 1% 0402
3J66	3198 031 04720	4.7kΩ 5% 0402
3J69	3198 031 04720	4.7kΩ 5% 0402
3J70	3198 031 02290	22Ω 5% 0.1W 0402
3J71	4822 117 13545	100Ω 1% 0402
3J74	4822 117 13606	10kΩ 5% 0.01W 0402
3J76	3198 031 04720	4.7kΩ 5% 0402
3J85	4822 117 13545	100Ω 1% 0402
3J86	4822 117 13545	100Ω 1% 0402
3J88	3198 031 04720	4.7kΩ 5% 0402
3K00	4822 117 13545	100Ω 1% 0402
3K01	4822 117 13545	100Ω 1% 0402
3K02	3198 031 01210	120Ω 5% 0.01W 0402
3K09	4822 117 13548	1kΩ 5% 0402
3K14	4822 117 13548	1kΩ 5% 0402
3K17	4822 117 13605	Jumper 0402
3K31	3198 031 03390	33Ω 1% 0402
3K32	3198 031 03390	33Ω 1% 0402
3K33	3198 031 03390	33Ω 1% 0402
3K34	3198 031 03390	33Ω 1% 0402
3K35	2350 033 11339	4 x 33Ω 5%
3K36	2350 033 11339	4 x 33Ω 5%
3K37	4822 117 13606	10kΩ 5% 0.01W 0402
3M01	4822 117 13596	220Ω 5% 0.01W 0402
3M02	4822 117 13596	220Ω 5% 0.01W 0402
3M03	4822 117 13596	220Ω 5% 0.01W 0402
3M04	4822 117 13596	220Ω 5% 0.01W 0402
3M05	4822 117 13596	220Ω 5% 0.01W 0402
3M07	4822 117 13596	220Ω 5% 0.01W 0402
3M08	4822 117 13596	220Ω 5% 0.01W 0402
3M10	4822 117 13545	100Ω 1% 0402
3M12	2322 734 63309	33Ω 1% 0.1W 0805
3M13	2322 734 63309	33Ω 1% 0.1W 0805
3M14	4822 117 13548	1kΩ 5% 0402
3M15	4822 117 13548	1kΩ 5% 0402
3M16	4822 117 13545	100Ω 1% 0402
3M17	4822 117 13545	100Ω 1% 0402
3M18	2322 734 63309	33Ω 1% 0.1W 0805
3M19	2322 734 63309	33Ω 1% 0.1W 0805
3M20	4822 117 13596	220Ω 5% 0.01W 0402
3M21	4822 117 13596	220Ω 5% 0.01W 0402
3M22	4822 117 13596	220Ω 5% 0.01W 0402
3M23	4822 117 13545	100Ω 1% 0402
3M30	4822 117 13596	220Ω 5% 0.01W 0402
3M31	4822 117 13596	220Ω 5% 0.01W 0402
3M33	4822 117 13596	220Ω 5% 0.01W 0402
3M34	4822 117 13596	220Ω 5% 0.01W 0402
3M35	4822 117 13596	220Ω 5% 0.01W 0402
3M36	4822 117 13596	220Ω 5% 0.01W 0402
3M40	4822 117 13606	10kΩ 5% 0.01W 0402
3M41	4822 117 13601	22kΩ 5% 0402
3M42	4822 117 13606	10kΩ 5% 0.01W 0402
3M43	4822 117 13596	220Ω 5% 0.01W 0402
3M46	4822 117 13603	33kΩ 5% 0402
3M47	4822 117 13548	1kΩ 5% 0402
3M55	4822 117 13545	100Ω 1% 0402
3N00	4822 117 13606	10kΩ 5% 0.01W 0402
3N01	3198 031 04720	4.7kΩ 5% 0402
3N02	3198 031 04720	4.7kΩ 5% 0402
3N03	3198 031 04720	4.7kΩ 5% 0402
3N04	3198 031 03930	39kΩ 5% 0402

3N05	3198 031 04720	4.7kΩ 5% 0402
3N06	3198 031 04720	4.7kΩ 5% 0402
3N07	3198 031 08220	8.2kΩ 5% 0.5W
3N08	3198 031 03930	39kΩ 5% 0402
3N09	3198 031 08220	8.2kΩ 5% 0.5W
3N10	3198 031 04720	4.7kΩ 5% 0402
3N11	3198 031 04720	4.7kΩ 5% 0402
3N12	3198 031 04720	4.7kΩ 5% 0402
3N14	3198 031 04720	4.7kΩ 5% 0402
3N15	3198 031 04720	4.7kΩ 5% 0402
3N16	3198 031 04720	4.7kΩ 5% 0402
3N17	3198 031 04720	4.7kΩ 5% 0402
3N18	3198 031 03930	39kΩ 5% 0402
3N19	3198 031 08220	8.2kΩ 5% 0.5W
3N20	3198 031 03930	39kΩ 5% 0402
3N21	3198 031 08220	8.2kΩ 5% 0.5W
3N22	3198 031 05630	56kΩ 5% 0402
3N23	3198 031 02240	220kΩ 5% 0.1W 0402
3N24	2350 033 10101	4 x 100Ω 5%
3N25	3198 031 04720	4.7kΩ 5% 0402
3N26	4822 117 13606	10kΩ 5% 0.01W 0402
3N27	4822 117 13606	10kΩ 5% 0.01W 0402
3N28	2322 705 70108	1Ω 5% 0402
3N29	3198 031 04730	47Ω 5% 0402
3N30	2322 705 70108	1Ω 5% 0402
3N31	4822 117 13601	22kΩ 5% 0402
3N32	3198 031 01540	150kΩ 5% 0402
3N33	2322 705 70108	1Ω 5% 0402
3N34	2322 705 70108	1Ω 5% 0402
3N35	4822 117 13606	10kΩ 5% 0.01W 0402
3N36	2322 705 70108	1Ω 5% 0402
3N37	2322 705 70184	180Ω 5% 0402
3N38	2322 705 70108	1Ω 5% 0402
3N39	2322 705 70274	270kΩ 5% 0402
3N40	4822 117 13603	33kΩ 5% 0402
3N41	4822 117 13606	10kΩ 5% 0.01W 0402
3N42	4822 117 13548	1kΩ 5% 0402
3N43	4822 117 13602	2.2kΩ 5% 0.01W 0402
3N44	4822 117 13602	2.2kΩ 5% 0.01W 0402
3N45	4822 117 13606	10kΩ 5% 0.01W 0402
3N46	4822 117 13601	22kΩ 5% 0402
3N47	3198 031 08230	82kΩ 5% 0402
3N48	4822 117 13606	10kΩ 5% 0.01W 0402
3N50	4822 117 13606	10kΩ 5% 0.01W 0402
3N51	4822 117 13602	2.2kΩ 5% 0.01W 0402
3N52	3198 031 04720	4.7kΩ 5% 0402
3N53	3198 031 04720	4.7kΩ 5% 0402
3N54	2350 033 11472	4x 4.7kΩ 5%
3N55	2350 033 11472	4x 4.7kΩ 5%
3N56	3198 031 08230	82kΩ 5% 0402
3N57	4822 117 13548	1kΩ 5% 0402
3N58	3198 031 03390	33Ω 1% 0402
3N59	4822 117 13597	330Ω 5% 0402 0.01W
3N60	3198 031 04730	47Ω 5% 0402
3N61	4822 117 13597	330Ω 5% 0402 0.01W
3N62	4822 117 13606	10kΩ 5% 0.01W 0402
3N63	4822 117 13601	22kΩ 5% 0402
3N69	3198 031 03390	33Ω 1% 0402
3N70	3198 031 04720	4.7kΩ 5% 0402
3N71	4822 117 13606	10kΩ 5% 0.01W 0402
3N72	4822 117 13606	10kΩ 5% 0.01W 0402
3N73	3198 031 04740	470kΩ 5% 0402
3N74	4822 117 11297	100kΩ 5% 0.1W
3N75	4822 117 11297	100kΩ 5% 0.1W
3N76	4822 117 13606	10kΩ 5% 0.01W 0402
3N77	4822 117 11297	100kΩ 5% 0.1W
3N78	2322 705 70106	10MΩ 5% 0402
3N79	3198 031 03340	330kΩ 5% 0402
3N80	3198 031 03340	330kΩ 5% 0402
3N90	4822 117 11297	100kΩ 5% 0.1W
3N92	4822 051 20478	4.7Ω 5% 0.1W
3N93	4822 117 11297	100kΩ 5% 0.1W
3N94	4822 051 20478	4.7Ω 5% 0.1W
3N95	4822 117 11297	100kΩ 5% 0.1W
3N96	4822 051 20478	4.7Ω 5% 0.1W
3N97	4822 117 11297	100kΩ 5% 0.1W
3N99	3198 031 01820	1.8kΩ 5% 0.01W 0402
3Q00	4822 117 13546	47Ω 5% 0402
3Q01	3198 031 01210	120Ω 5% 0.01W 0402
3Q03	3198 031 07590	75Ω 5% 0402
3Q06	3198 031 07590	75Ω 5% 0402
3Q10	4822 117 13545	100Ω 1% 0402
3Q11	4822 117 13545	100Ω 1% 0402
3Q12	4822 117 13545	100Ω 1% 0402
3Q13	4822 117 13545	100Ω 1% 0402
3Q14	4822 117 13545	100Ω 1% 0402
3Q15	4822 117 13545	100Ω 1% 0402
3Q16	3198 031 01530	15kΩ 5% 0.01W 0402
3Q17	3198 031 01530	15kΩ 5% 0.01W 0402
3Q18	3198 031 01530	15kΩ 5% 0.01W 0402
3Q19	3198 031 02290	22Ω 5% 0.1W 0402
3Q20	3198 031 02290	22Ω 5% 0.1W 0402
3Q21	3198 031 02290	22Ω 5% 0.1W 0402
3Q22	3198 031 02290	22Ω 5% 0.1W 0402
3Q23	3198 031 01530	15kΩ 5% 0.01W 0402
3Q24	3198 031 04720	4.7kΩ 5% 0402
3Q26	3198 031 04720	4.7kΩ 5% 0402
3Q27	3198 031 04720	4.7kΩ 5% 0402
3Q28	3198 031 04720	4.7kΩ 5% 0402
3Q31	3198 031 04720	4.7kΩ 5% 0402
3Q32	3198 031 04720	4.7kΩ 5% 0402
3Q70	3198 031 04720	4.7kΩ 5% 0402
3T04	4822 117 13545	100Ω 1% 0402
3T06	4822 117 13545	100Ω 1% 0402
3T07	4822 117 13545	100Ω 1% 0402
3T09	4822 117 13545	100Ω 1% 0402
3T11▲	4822 117 11152	4.7Ω 5%
3T13	3198 031 01210	120Ω 5% 0.01W 0402
3T14	3198 031 01210	120Ω 5% 0.01W 0402
3T15▲	4822 117 11152	4.7Ω 5%
3T16	4822 117 13543	470Ω 5% 0402
3T17	4822 117 13543	470Ω 5% 0402
3T18	4822 117 11297	100kΩ 5% 0.1W
3T19	3198 031 02720	2.7kΩ 5% 0.01W 0402
3T20	4822 117 13545	100Ω 1% 0402
3T21	4822 117 13545	100Ω 1% 0402
3T22	3198 031 03920	3.9kΩ 5% 0402
3T23	3198 031 03920	3.9kΩ 5% 0402
3T24	4822 117 13601	22kΩ 5% 0402
3T25	4822 117 13601	22kΩ 5% 0402
3U01	4822 117 13606	10kΩ 5% 0.01W 0402
3U02	4822 117 13606	10kΩ 5% 0.01W 0402
3U03	4822 117 13606	10kΩ 5% 0.01W 0402
3U04	2322 706 71002	1kΩ 1% 0402
3U05	3198 031 02720	2.7kΩ 5% 0.01W 0402
3U06	3198 031 04720	4.7kΩ 5% 0402
3U07▲	5322 117 11726	10Ω 5%
3U08▲	5322 117 11726	10Ω 5%
3U09	4822 117 13548	1kΩ 5% 0402
3U10	3198 031 02720	2.7kΩ 5% 0.01W 0402
3U11	2322 706 71002	1kΩ 1% 0402
3U12	2322 706 73901	390Ω 1% 0402
3U13	2322 706 71002	1kΩ 1% 0402
3U14	4822 117 13548	1kΩ 5% 0402
3U15	4822 117 11297	100kΩ 5% 0.1W
3U16	3198 031 02720	2.7kΩ 5% 0.01W 0402
3U17	4822 117 13548	1kΩ 5% 0402
3U18	3198 031 04730	47Ω 5% 0402
3U19	3198 031 04730	47Ω 5% 0402
3U20	3198 031 04730	47Ω 5% 0402
3U21	4822 117 13606	10kΩ 5% 0.01W 0402
3U22	4822 117 13606	10kΩ 5% 0.01W 0402
3U23	4822 117 13606	10kΩ 5% 0.01W 0402
3U24	4822 117 13606	10kΩ 5% 0.01W 0402
3U25	4822 117 13606	10kΩ 5% 0.01W 0402
3U26	4822 117 13606	10kΩ 5% 0.01W 0402
3U27	2322 706 75601	560Ω 1% 0402
3U28	2322 706 72702	2.7kΩ 1% 0402
3U29	3198 031 06820	6.8kΩ 5% 0.01W 0402
3U30	4822 117 13601	22kΩ 5% 0402
3U31	4822 117 11297	100kΩ 5% 0.1W
3U32▲	5322 117 11726	10Ω 5%
3U33	4822 117 11297	100kΩ 5% 0.1W
3U34	3198 031 04730	47Ω 5% 0402
3U35	3198 031 04730	47Ω 5% 0402
3U37	3198 031 06820	6.8kΩ 5% 0.01W 0402
3U38	3198 031 06820	6.8kΩ 5% 0.01W 0402
3U39	3198 031 06820	6.8kΩ 5% 0.01W 0402
3U40	4822 117 13548	1kΩ 5% 0402
3U41	4822 117 13548	1kΩ 5% 0402
3U42	4822 117 13548	1kΩ 5% 0402
3U43	3198 031 04730	47Ω 5% 0402
3U44	3198 031 01050	1MΩ 5% 0402
3U45	4822 051 30109	10Ω 5% 0.062W
3U46	4822 117 13613	2.2Ω 5% 0603
3U47	4822 051 30109	10Ω 5% 0.062W
3U48	4822 117 13613	2.2Ω 5% 0603
3U49	4822 051 30109	10Ω 5% 0.062W
3U50	4822 117 13613	2.2Ω 5% 0603
3U51	4822 117 13545	100Ω 1% 0402
3U52	4822 051 30102	1kΩ 5% 0.062W
3U53	4822 117 13597	330Ω 5% 0402 0.01W
3U54	4822 051 30109	10Ω 5% 0.062W
3U55	4822 051 30109	10Ω 5% 0.062W
3U56	4822 051 30109	10Ω 5% 0.062W
3U57	4822 117 11297	100kΩ 5% 0.1W
3U58	4822 051 20478	4.7Ω 5% 0.1W
3U59	4822 051 20478	4.7Ω 5% 0.1W
3U60	4822 051 20478	4.7Ω 5% 0.1W
3U61	4822 117 13606	10kΩ 5% 0.01W 0402
3U62	4822 117 13548	1kΩ 5% 0402
3U67	4822 117 10353	150Ω 1% 0.1W
3U68	4822 117 10353	150Ω 1% 0.1W
3U69	4822 051 20478	4.7Ω 5% 0.1W
3U71	4822 117 13548	1kΩ 5% 0402
3U72	3198 031 01210	120Ω 5% 0.01W 0402
3U73	4822 117 13596	220Ω 5% 0.01W 0402
3U74	4822 117 13606	10kΩ 5% 0.01W 0402
3U75	3198 031 01510	150Ω 5% 0.01W 0402
3U76	4822 117 13596	220Ω 5% 0.01W 0402
3U77	4822 117 13606	10kΩ 5% 0.01W 0402
3U78	4822 117 13548	1kΩ 5% 0402
3U79	4822 117 13545	100Ω 1% 0402
3U80	4822 117 13606	10kΩ 5% 0.01W 0402
3U81	4822 051 30109	10Ω 5% 0.062W
3U82	4822 117 13545	100Ω 1% 0402
3U83	4822 117 13596	220Ω 5% 0.01W 0402
3U84	4822 117 13545	100Ω 1% 0402
3U85	4822 117 13548	1kΩ 5% 0402
3U86	4822 117 13545	100Ω 1% 0402
3U87	4822 117 13548	1kΩ 5% 0402
3U88	4822 117 13545	100Ω 1% 0402
3U89	4822 117 13545	100Ω 1% 0402
3V00	3198 031 02290	22Ω 5% 0.1W 0402
3V01	3198 031 02290	22Ω 5% 0.1W 0402
3V02	3198 031 02290	22Ω 5% 0.1W 0402
3V03	3198 031 02290	22Ω 5% 0.1W 0402
3V04	3198 031 02290	22Ω 5% 0.1W 0402
3V05	3198 031 02290	22Ω 5% 0.1W 0402
3V06	3198 031 02290	22Ω 5% 0.1W 0402
3V07	3198 031 02290	22Ω 5% 0.1W 0402
3V08	3198 031 02290	22Ω 5% 0.1W 0402
3V09	3198 031 02290	22Ω 5% 0.1W 0402
3V10	3198 031 02290	22Ω 5% 0.1W 0402
3V11	3198 031 02290	22Ω 5% 0.1W 0402
3V12	3198 031 02290	22Ω 5% 0.1W 0402
3V13	3198 031 02290	22Ω 5% 0.1W 0402
3V14	3198 031 02290	22Ω 5% 0.1W 0402
3V15	3198 031 02290	22Ω 5% 0.1W 0402
3V16	3198 031 02290	22Ω 5% 0.1W 0402
3V17	3198 031 02290	22Ω 5% 0.1W 0402
3V18	3198 031 02290	22Ω 5% 0.1W 0402
3V19	3198 031 02290	22Ω 5% 0.1W 0402
3V20	3198 031 02290	22Ω 5% 0.1W 0402
3V21	3198 031 02290	22Ω 5% 0.1W 0402
3V22	3198 031 02290	22Ω 5% 0.1W 0402
3V23	3198 031 02290	22Ω 5% 0.1W 0402
3V32	3198 031 02290	22Ω 5% 0.1W 0402
3V33	3198 031 02290	22Ω 5% 0.1W 0402
3V34	3198 031 02290	22Ω 5% 0.1W 0402
3V35	3198 031 02290	22Ω 5% 0.1W 0402
3V36	3198 031 02290	22Ω 5% 0.1W 0402
3V37	3198 031 02290	22Ω 5% 0.1W 0402
3V38	3198 031 02290	22Ω 5% 0.1W 0402
3V39	3198 031 02290	22Ω 5% 0.1W 0402
3V40	3198 031 02290	22Ω 5% 0.1W 0402
3V41	3198 031 02290	22Ω 5% 0.1W 0402
3V42	3198 031 02290	22Ω 5% 0.1W 0402
3V43	3198 031 02290	22Ω 5% 0.1W 0402
3V44	4822 117 13545	100Ω 1% 0402
3V78	4822 117 13548	1kΩ 5% 0402
3V79	4822 117 13606	10kΩ 5% 0.01W 0402
3V80	4822 117 13606	10kΩ 5% 0.01W 0402
9C01	4822 117 13605	Jumper 0402
9C23	4822 117 13605	Jumper 0402
9C51	4822 117 13605	Jumper 0402
9C53	4822 117 13605	Jumper 0402
9C55	4822 117 13605	Jumper 0402
9C57	4822 117 13605	Jumper 0402
9D83	4822 117 13605	Jumper 0402
9E00	4822 051 20008	Jumper 0805
9E02	4822 051 20008	Jumper 0805
9E14	4822 117 13605	Jumper 0402
9E16	4822 117 13605	Jumper 0402
9E19	4822 117 13605	Jumper 0402
9E21	4822 117 13605	Jumper 0402
9E27	4822 117 13605	Jumper 0402
9E28	4822 117 13605	Jumper 0402
9E30	4822 117 13605	Jumper 0402
9E31	4822 051 20008	Jumper 0805
9E32	4822 051 20008	Jumper 0805
9E36	4822 117 13605	Jumper 0402
9E37	4822 117 13605	Jumper 0402
9E38	4822 117 13605	Jumper 0402
9E39	4822 117 13605	Jumper 0402
9E41	4822 117 13605	Jumper 0402
9E55	4822 117 13605	Jumper 0402
9E56	4822 117 13605	Jumper 0402
9E57	4822 117 13605	Jumper 0402
9E58	4822 117 13605	Jumper 0402
9E59	4822 117 13605	Jumper 0402
9E60	4822 117 13605	Jumper 0402
9E61	4822 117 13605	Jumper 0402
9E62	4822 117 13605	Jumper 0402
9E63	4822 117 13605	Jumper 0402
9E64	4822 117 13605	Jumper 0402
9E65	4822 117 13605	Jumper 0402
9E66	4822 117 13605	Jumper 0402
9E67	4822 117 13605	Jumper 0402
9E68	4822 117 13605	Jumper 0402
9E69	4822 117 13605	Jumper 0402
9E70	4822 117 13605	Jumper 0402

9E71	4822 117 13605	Jumper 0402
9E72	4822 117 13605	Jumper 0402
9E73	4822 117 13605	Jumper 0402
9E74	4822 117 13605	Jumper 0402
9E75	4822 117 13605	Jumper 0402
9E76	4822 117 13605	Jumper 0402
9E77	4822 117 13605	Jumper 0402
9E78	4822 117 13605	Jumper 0402
9E79	4822 117 13605	Jumper 0402
9E80	4822 117 13605	Jumper 0402
9E87	4822 117 13605	Jumper 0402
9E88	4822 117 13605	Jumper 0402
9E90	4822 117 13605	Jumper 0402
9E92	4822 117 13605	Jumper 0402
9E94	4822 117 13605	Jumper 0402
9E96	4822 117 13605	Jumper 0402
9F02	4822 117 13605	Jumper 0402
9F03	4822 117 13605	Jumper 0402
9F09	4822 117 13605	Jumper 0402
9F14	4822 117 13605	Jumper 0402
9F17	4822 117 13605	Jumper 0402
9G06	4822 117 13605	Jumper 0402
9G07	4822 117 13605	Jumper 0402
9G21	4822 117 13605	Jumper 0402
9G23	4822 117 13605	Jumper 0402
9G25	4822 117 13605	Jumper 0402
9G27	4822 117 13605	Jumper 0402
9G29	4822 117 13605	Jumper 0402
9G31	4822 117 13605	Jumper 0402
9G33	4822 117 13605	Jumper 0402
9G35	4822 117 13605	Jumper 0402
9G37	4822 117 13605	Jumper 0402
9G39	4822 117 13605	Jumper 0402
9G41	4822 117 13605	Jumper 0402
9G43	4822 117 13605	Jumper 0402
9G45	4822 117 13605	Jumper 0402
9G47	4822 117 13605	Jumper 0402
9G51	4822 117 13605	Jumper 0402
9G54	4822 117 13605	Jumper 0402
9G56	4822 117 13605	Jumper 0402
9G58	4822 117 13605	Jumper 0402
9G60	4822 117 13605	Jumper 0402
9G62	4822 117 13605	Jumper 0402
9G64	4822 117 13605	Jumper 0402
9G66	4822 117 13605	Jumper 0402
9G68	4822 117 13605	Jumper 0402
9G70	4822 117 13605	Jumper 0402
9G71	4822 117 13605	Jumper 0402
9G72	4822 117 13605	Jumper 0402
9G73	4822 117 13605	Jumper 0402
9G74	3198 031 07590	75Ω 5% 0402
9G75	3198 031 07590	75Ω 5% 0402
9H01	4822 117 13605	Jumper 0402
9H02	4822 117 13605	Jumper 0402
9H03	4822 117 13605	Jumper 0402
9H05	4822 117 13605	Jumper 0402
9H06	4822 117 13605	Jumper 0402
9H07	4822 117 13605	Jumper 0402
9H08	4822 117 13605	Jumper 0402
9H09	4822 117 13605	Jumper 0402
9H10	4822 117 13605	Jumper 0402
9H11	4822 117 13605	Jumper 0402
9H12	4822 117 13605	Jumper 0402
9H13	4822 117 13605	Jumper 0402
9H14	4822 117 13605	Jumper 0402
9H15	4822 117 13605	Jumper 0402
9H16	4822 117 13605	Jumper 0402
9H20	4822 117 13605	Jumper 0402
9H21	4822 117 13605	Jumper 0402
9I37	4822 117 13605	Jumper 0402
9I41	4822 117 13605	Jumper 0402
9I42	4822 117 13605	Jumper 0402
9I88	4822 117 13605	Jumper 0402
9I91	4822 051 20008	Jumper 0805
9I92	4822 051 20008	Jumper 0805
9I94	4822 051 20008	Jumper 0805
9J00	4822 117 13605	Jumper 0402
9J01	4822 051 20008	Jumper 0805
9J02	4822 051 20008	Jumper 0805
9J10	4822 117 13605	Jumper 0402
9J12	4822 117 13605	Jumper 0402
9J13	4822 117 13605	Jumper 0402
9J67	4822 117 13605	Jumper 0402
9J68	4822 117 13605	Jumper 0402
9J75	4822 117 13605	Jumper 0402
9J77	4822 117 13605	Jumper 0402
9J78	4822 117 13605	Jumper 0402
9J79	4822 117 13605	Jumper 0402
9J80	4822 117 13605	Jumper 0402
9K02	4822 117 13605	Jumper 0402
9K03	4822 117 13605	Jumper 0402
9K10	4822 117 13605	Jumper 0402
9K11	4822 117 13605	Jumper 0402
9K12	4822 117 13605	Jumper 0402
9K13	4822 117 13605	Jumper 0402
9K14	4822 117 13605	Jumper 0402
9K15	4822 117 13605	Jumper 0402
9L11	4822 117 13605	Jumper 0402
9M02	4822 051 20008	Jumper 0805
9N00	4822 117 13605	Jumper 0402
9N02	4822 117 13605	Jumper 0402
9N05	4822 117 13605	Jumper 0402
9N64	4822 051 20008	Jumper 0805
9N65	4822 051 20008	Jumper 0805
9N69	4822 051 20008	Jumper 0805
9Q05	4822 117 13605	Jumper 0402
9Q06	4822 117 13605	Jumper 0402
9Q07	4822 117 13605	Jumper 0402
9Q08	4822 117 13605	Jumper 0402
9Q36	4822 117 13605	Jumper 0402
9Q37	4822 117 13605	Jumper 0402
9T01	4822 117 13605	Jumper 0402
9U01	4822 117 13605	Jumper 0402
9U02	4822 117 13605	Jumper 0402
9U03	4822 117 13605	Jumper 0402
9Y70	4822 117 13605	Jumper 0402
9Y71	4822 117 13605	Jumper 0402
9Y81	4822 117 13605	Jumper 0402
9Y82	4822 117 13605	Jumper 0402
9Y83	4822 117 13605	Jumper 0402
9Y84	4822 117 13605	Jumper 0402
9Y85	4822 117 13605	Jumper 0402

5C01	2422 549 44197	Bead 220Ω at 100MHz
5C02	2422 549 44197	Bead 220Ω at 100MHz
5C03	2422 549 44197	Bead 220Ω at 100MHz
5C31	2422 549 44197	Bead 220Ω at 100MHz
5C32	2422 549 43769	Bead 30Ω at 100MHz
5C33	2422 549 44197	Bead 220Ω at 100MHz
5C34	2422 549 44197	Bead 220Ω at 100MHz
5C36	2422 549 44197	Bead 220Ω at 100MHz
5C52	2422 549 44197	Bead 220Ω at 100MHz
5C53	2422 549 44197	Bead 220Ω at 100MHz
5C54	2422 549 44197	Bead 220Ω at 100MHz
5C56	2422 549 44197	Bead 220Ω at 100MHz
5C57	4822 157 11892	0.22µH 10% 0805
5D11	2422 536 00671	10µH 20%
5D12	2422 549 44197	Bead 220Ω at 100MHz
5D13	2422 549 44197	Bead 220Ω at 100MHz
5D14	2422 536 00779	10µH 20%
5E07	2422 549 43062	Bead 600Ω at 100MHz
5E09	4822 157 11716	Bead 30Ω at 100MHz
5E10	4822 157 11716	Bead 30Ω at 100MHz
5E11	4822 157 11716	Bead 30Ω at 100MHz
5E12	4822 157 11716	Bead 30Ω at 100MHz
5E13	4822 157 11716	Bead 30Ω at 100MHz
5E14	4822 157 11716	Bead 30Ω at 100MHz
5E15	2422 535 94134	10µH 20% 0805
5G03	2422 549 42896	Bead 120Ω 100MHz
5G10	2422 549 44197	Bead 220Ω at 100MHz
5G11	2422 549 44197	Bead 220Ω at 100MHz
5G12	2422 549 44197	Bead 220Ω at 100MHz
5G50	2422 549 42896	Bead 120Ω 100MHz
5G51	2422 549 42896	Bead 120Ω 100MHz
5G52	2422 549 42896	Bead 120Ω 100MHz
5H01	2422 549 44768	Bead 90Ω at 100MHz
5H02	2422 549 44768	Bead 90Ω at 100MHz
5H03	2422 549 44197	Bead 220Ω at 100MHz
5H04	2422 549 44197	Bead 220Ω at 100MHz
5H05	3198 018 52280	2.2µF 10% 1008
5I00	2422 549 42896	Bead 120Ω 100MHz
5J51	2422 549 44197	Bead 220Ω at 100MHz
5J52	2422 549 44197	Bead 220Ω at 100MHz
5J53	2422 549 43769	Bead 30Ω at 100MHz
5J54	2422 549 43769	Bead 30Ω at 100MHz
5K00	2422 549 44197	Bead 220Ω at 100MHz
5K01	2422 549 44197	Bead 220Ω at 100MHz
5K02	2422 549 44197	Bead 220Ω at 100MHz
5K03	2422 549 44197	Bead 220Ω at 100MHz
5K04	2422 549 44197	Bead 220Ω at 100MHz
5K05	2422 549 44197	Bead 220Ω at 100MHz
5K06	2422 549 44197	Bead 220Ω at 100MHz
5M00	2422 549 44197	Bead 220Ω at 100MHz
5M01	2422 549 44197	Bead 220Ω at 100MHz
5M02	2422 549 44197	Bead 220Ω at 100MHz
5M03	2422 549 44197	Bead 220Ω at 100MHz
5M04	2422 549 44197	Bead 220Ω at 100MHz
5M05	3198 018 90050	Bead 1kΩ at 100MHz
5M06	2422 549 44197	Bead 220Ω at 100MHz
5M07	2422 549 44197	Bead 220Ω at 100MHz
5M08	2422 549 44197	Bead 220Ω at 100MHz
5M14	2422 549 42896	Bead 120Ω 100MHz
5M20	2422 549 44197	Bead 220Ω at 100MHz
5M21	2422 549 44197	Bead 220Ω at 100MHz
5M25	2422 549 44197	Bead 220Ω at 100MHz
5N01	2422 549 42896	Bead 120Ω 100MHz
5N10	2422 549 44197	Bead 220Ω at 100MHz
5Q01	2422 549 43769	Bead 30Ω at 100MHz
5Q02	2422 549 43769	Bead 30Ω at 100MHz
5Q03	2422 549 43769	Bead 30Ω at 100MHz
5Q04	2422 549 43769	Bead 30Ω at 100MHz
5Q05	3198 018 51080	1µH 10% 0603
5Q06	2422 549 44197	Bead 220Ω at 100MHz
5T01	2422 535 94134	10µH 20% 0805
5U01	2422 536 00779	10µH 20%
5U02	2422 536 00779	10µH 20%
5U03	2422 536 00779	10µH 20%
5U05	2422 536 00671	10µH 20%
5U06	2422 536 00671	10µH 20%
5U09	2422 549 44197	Bead 220Ω at 100MHz
5U12	2422 549 44197	Bead 220Ω at 100MHz
5U13	2422 549 44197	Bead 220Ω at 100MHz
5U14	2422 549 44197	Bead 220Ω at 100MHz
5U16	2422 549 44197	Bead 220Ω at 100MHz
5U17	2422 549 44197	Bead 220Ω at 100MHz
5U19	2422 549 44197	Bead 220Ω at 100MHz
5U20	2422 549 44197	Bead 220Ω at 100MHz
5U21	2422 536 00671	10µH 20%
5V00	2422 549 44197	Bead 220Ω at 100MHz

6C52	9340 552 30115	BA591
6D02	4822 130 11397	BAS316
6D03	9322 159 70685	MM3Z9V1
6E08	9340 566 10115	BAV99S
6E09	4822 130 11397	BAS316
6E10	9340 553 52115	BAS321
6E11	9340 553 52115	BAS321
6E12	9340 553 52115	BAS321
6E13	9340 553 52115	BAS321
6E24	4822 130 11416	PDZ6.8B
6E26	4822 130 11416	PDZ6.8B
6E27	4822 130 11416	PDZ6.8B
6E28	4822 130 11416	PDZ6.8B
6E29	4822 130 11416	PDZ6.8B
6E30	4822 130 11416	PDZ6.8B
6E31	4822 130 11416	PDZ6.8B
6E32	4822 130 11416	PDZ6.8B
6E33	4822 130 11416	PDZ6.8B
6E36	4822 130 11416	PDZ6.8B
6E37	9340 548 61115	PDZ12B
6E38	4822 130 11416	PDZ6.8B
6E39	4822 130 11416	PDZ6.8B
6E41	4822 130 11416	PDZ6.8B
6E43	4822 130 11416	PDZ6.8B
6E44	4822 130 80622	BAT54
6E45	4822 130 80622	BAT54
6F01	4822 130 11397	BAS316
6F02	4822 130 11397	BAS316
6F04	4822 130 11397	BAS316
6F05	4822 130 11397	BAS316
6F06	4822 130 11397	BAS316
6F07	9322 165 17668	STPS2L30A
6G01	3198 020 55680	BZX384-C5V6
6G06	9322 211 74685	SML-010MTL
6G11	9322 211 74685	SML-010MTL
6H00	9322 211 74685	SML-010MTL
6H01	4822 130 11397	BAS316
6H03	4822 130 11397	BAS316
6H04	9340 566 10115	BAV99S
6H05	9340 566 10115	BAV99S
6H06	9340 566 10115	BAV99S
6I00	4822 130 11416	PDZ6.8B
6I01	4822 130 11416	PDZ6.8B
6I02	4822 130 11416	PDZ6.8B
6I03	4822 130 11416	PDZ6.8B
6I04	4822 130 11416	PDZ6.8B
6I05	4822 130 11416	PDZ6.8B
6I08	4822 130 11416	PDZ6.8B
6I09	4822 130 11416	PDZ6.8B
6I10	4822 130 11416	PDZ6.8B
6I11	4822 130 11416	PDZ6.8B
6I12	4822 130 11416	PDZ6.8B
6I24	4822 130 11416	PDZ6.8B
6I32	4822 130 11416	PDZ6.8B
6I34	4822 130 11416	PDZ6.8B
6I36	4822 130 11416	PDZ6.8B
6I38	4822 130 11416	PDZ6.8B
6M01	9340 566 10115	BAV99S
6N01	4822 130 80622	BAT54
6N03	4822 130 80622	BAT54
6N04	9340 566 10115	BAV99S
6N05	9340 566 10115	BAV99S
6N06	9340 566 10115	BAV99S
6T01	9322 201 26685	SML4752
6T02	4822 130 11397	BAS316
6T03	4822 130 11397	BAS316

6T06	9322 211 74685	SML-010MTL
6T07	9322 211 74685	SML-010MTL
6T08	4822 130 10838	UDZ3.3B
6U01	4822 130 11397	BAS316
6U02	4822 130 11397	BAS316
6U03	4822 130 11397	BAS316
6U05	9322 165 17668	STPS2L30A
6U06	9322 165 17668	STPS2L30A
6U07	9322 165 17668	STPS2L30A
6U11	9340 548 61115	PDZ12B
6U12	9340 548 61115	PDZ12B
6U14	4822 130 11397	BAS316
6U15	4822 130 11397	BAS316
6U16	4822 130 11397	BAS316
6U17	4822 130 10838	UDZ3.3B
6U18	4822 130 10328	BAV99W
6U19	9322 211 74685	SML-010MTL
6U20	9322 211 74685	SML-010MTL
6U21	9322 211 74685	SML-010MTL
6U22	9322 211 74685	SML-010MTL

7C00	9352 740 21557	PNX3000HL/N2
7C31	9340 425 20115	BC847BS
7C32	9322 167 69668	LD1117ADT18
7C54	3198 010 42310	BC847BW
7C55	3198 010 42310	BC847BW
7C60	9340 425 30115	BC847BPN
7C61	3198 010 42310	BC847BW
7D04	9322 182 77668	L6910
7D05	9322 160 70668	SI4936ADY
7D06	9340 425 20115	BC847BS
7D08	9340 425 30115	BC847BPN
7D09	9340 425 30115	BC847BPN
7D10	3198 010 42310	BC847BW
7E01	9340 425 30115	BC847BPN
7E03	3198 010 44350	BC807-25W
7E05	9340 425 30115	BC847BPN
7E06	3198 010 44350	BC807-25W
7E08	9340 425 30115	BC847BPN
7E09	5322 130 60159	BC846B
7E10	9340 219 30115	BC817-25W
7E11	9340 219 30115	BC817-25W
7E30		For SW see item 0603
7E31	9965 000 04199	BSN20
7E32	9965 000 04199	BSN20
7E33	9322 199 35671	SII9993CTG100
7E34	9965 000 04199	BSN20
7E35	9965 000 04199	BSN20
7F01	9322 204 63685	NCP303LSN10
7F02	9322 204 63685	NCP303LSN10
7F03	9322 204 63685	NCP303LSN10
7F05	9322 204 63685	NCP303LSN10
7F06	9322 204 63685	NCP303LSN10
7F07	9352 686 35118	PCA9515DP
7F08	9322 204 63685	NCP303LSN10
7F09	9322 204 63685	NCP303LSN10
7F11	9322 206 22668	M24C64-WDW6P
7F13	3198 010 44310	PDTC114EU
7F14	9351 875 10118	74HCT4066PW
7F15		For SW see item 0601
7F16	3198 010 44310	PDTC114EU
7F17	3198 010 42310	BC847BW
7G06	9322 204 10685	SI3441BDV
7G07	3198 010 42310	BC847BW
7G08	3198 010 42310	BC847BW
7G50	9322 159 45668	DS90C385MTD
7I12	9340 425 20115	BC847BS
7I55	9352 691 94118	PCA9554PW
7I71	9340 425 20115	BC847BS
7I80	3198 010 42310	BC847BW
7I87	9340 425 20115	BC847BS
7I94	9351 875 80118	74HCU04PW
7J00	9322 201 63668	TS924IP
7J02	9322 187 67668	TS482IS
7J50	9322 204 76671	T6TU5XBG-0001
7J51	9322 206 19672	MSM56V16160F-7T3-FG
7J53	9322 170 14668	LF15ABDT
7K80	9352 754 48557	PNX2000HL/M1
7M01	9340 425 30115	BC847BPN
7M02	3198 010 42310	BC847BW
7M03	3198 010 42310	BC847BW
7M04	3198 010 42310	BC847BW
7N01	9340 425 30115	BC847BPN
7N19	3198 010 44310	PDTC114EU
7N50	9352 115 40118	74LVC245APW
7N51	9352 115 40118	74LVC245APW
7N52	9352 115 40118	74LVC245APW
7N53		For SW see item 0605
7N55	9340 425 30115	BC847BPN
7N56	9340 425 30115	BC847BPN
7N60	9340 425 30115	BC847BPN
7N61	9340 425 10115	BC857BS
7N70	9322 198 09685	LD2981CU33
7N71	9322 198 10685	LD2981CU50
7N72	9322 198 11685	L78L08ACU
7Q01	9322 204 86668	LM3526M-LNOPB
7T02	9322 104 47668	L78M05CDT
7T03	3198 010 42310	BC847BW
7T04	3198 010 42310	BC847BW
7T10	9352 686 35118	PCA9515DP
7U01	9322 160 70668	SI4936ADY
7U02	9322 160 70668	SI4936ADY
7U03	9322 160 70668	SI4936ADY
7U04	9322 182 77668	L6910
7U05	9322 182 77668	L6910
7U06	9322 182 77668	L6910
7U08	9340 425 20115	BC847BS
7U09	9340 425 20115	BC847BS
7U10	9340 425 20115	BC847BS
7U14	9340 425 20115	BC847BS
7U15	9322 204 71668	SI4835BDY
7U17	4822 209 16406	TL431ACD
7U19	5322 130 60159	BC846B
7U20	9340 425 30115	BC847BPN
7U21	3198 010 42310	BC847BW
7V00	9352 760 31557	PNX8550EH/M1
7V01	9322 204 22671	K4D551638D-LC40
7V02	9322 204 22671	K4D551638D-LC40

External I/O [BE]

Various

1O01	2422 025 18256	Socket 21p f Bk
1O02	2422 025 18256	Socket 21p f Bk
1O35	2422 025 17601	Connector 40p f

2O02	3198 017 32240	220nF 20% 10V 0603
2O03	2020 552 96448	1µF 10% 16V 0805
2O04	2020 552 96448	1µF 10% 16V 0805
2O05	2020 552 96448	1µF 10% 16V 0805
2O06	3198 016 31010	100pF 10% 50V 0603
2O07	3198 032 34130	10µF 20% 10V
2O08	3198 032 34130	10µF 20% 10V
2O09	3198 017 31040	100nF 20% 50V 0603
2O11	3198 032 34130	10µF 20% 10V
2O12	3198 017 31040	100nF 20% 50V 0603
2O13	2020 552 96448	1µF 10% 16V 0805
2O14	3198 017 31040	100nF 20% 50V 0603
2O15	3198 017 31040	100nF 20% 50V 0603
2O16	3198 016 31010	100pF 10% 50V 0603
2O17	3198 017 31040	100nF 20% 50V 0603
2O18	3198 016 33310	330pF 1% 50V 0603
2O19	2020 552 96448	1µF 10% 16V 0805
2O20	2020 552 96448	1µF 10% 16V 0805
2O21	2020 552 96448	1µF 10% 16V 0805
2O22	2020 552 96448	1µF 10% 16V 0805
2O23	3198 017 31040	100nF 20% 50V 0603
2O24	3198 030 41010	100µF 20% 16V
2O25	3198 017 01040	100nF 10% 16V 0805
2O26	2020 552 96448	1µF 10% 16V 0805
2O29	3198 016 31010	100pF 10% 50V 0603
2O30	3198 016 31010	100pF 10% 50V 0603
2O31	3198 016 31010	100pF 10% 50V 0603
2O32	3198 016 31010	100pF 10% 50V 0603
2O33	3198 016 33310	330pF 1% 50V 0603
2O35	3198 017 31040	100nF 20% 50V 0603
2O36	3198 017 31040	100nF 20% 50V 0603
2O37	3198 017 31040	100nF 20% 50V 0603
2O44	3198 030 41090	10µF 20% 16V
2O46	3198 030 41090	10µF 20% 16V
2O52	3198 032 35150	10µF 20% 10V
2O53	3198 017 31040	100nF 20% 50V 0603
2O58	3198 017 31040	100nF 20% 50V 0603
2O59	3198 032 34130	10µF 20% 10V

3I01	3198 021 31010	100Ω 5% 0.062W 0603
3I02	3198 021 31020	1kΩ 5% 0.062W 0603
3O02	3198 021 35610	560Ω 5% 0.062W 0603
3O03	3198 021 33310	330Ω 5% 0.062W 0603
3O04	3198 021 32230	22kΩ 5% 0603
3O05	3198 021 32230	22kΩ 5% 0603
3O06	3198 021 36890	68Ω 5% 0.062W 0603
3O07	3198 021 31020	1kΩ 5% 0.062W 0603
3O08	3198 021 34720	4.7kΩ 5% 0603
3O09	3198 021 32230	22kΩ 5% 0603
3O10	3198 021 32230	22kΩ 5% 0603
3O11	3198 021 31020	1kΩ 5% 0.062W 0603
3O13	3198 021 34730	47kΩ 5% 0603
3O14	3198 021 31020	1kΩ 5% 0.062W 0603
3O16	3198 021 38220	8.2kΩ 5% 0.062W 0603
3O17	3198 021 33320	3.3kΩ 5% 0.062W 0603
3O18	3198 021 31040	100kΩ 5% 0.062W 0603
3O19	3198 021 31020	1kΩ 5% 0.062W 0603
3O20	3198 021 34730	47kΩ 5% 0603
3O21	3198 021 31040	100kΩ 5% 0.062W 0603
3O22	3198 021 31040	100kΩ 5% 0.062W 0603
3O23	3198 021 31020	1kΩ 5% 0.062W 0603
3O24	3198 021 31040	100kΩ 5% 0.062W 0603
3O25	3198 021 32230	22kΩ 5% 0603
3O26	3198 021 31010	100Ω 5% 0.062W 0603
3O27	3198 021 31040	100kΩ 5% 0.062W 0603
3O29	3198 021 32230	22kΩ 5% 0603
3O31	3198 021 38220	8.2kΩ 5% 0.062W 0603
3O32	3198 021 33320	3.3kΩ 5% 0.062W 0603
3O33	3198 021 32230	22kΩ 5% 0603
3O34	3198 021 31040	100kΩ 5% 0.062W 0603
3O37	3198 021 36810	680Ω 5% 0.062W 0603
3O40	3198 021 31010	100Ω 5% 0.062W 0603
3O44	3198 021 31010	100Ω 5% 0.062W 0603
3O45	3198 021 31010	100Ω 5% 0.062W 0603
3O46	3198 021 31010	100Ω 5% 0.062W 0603
3O47	3198 021 31010	100Ω 5% 0.062W 0603
3O49	2322 750 61008	1Ω 5% 1206 Fuse
3O51	2322 702 60759	75Ω 5% 0603
3O52	3198 021 36890	68Ω 5% 0.062W 0603
3O55	2322 702 60759	75Ω 5% 0603
3O59	2322 702 60759	75Ω 5% 0603
3O60	3198 021 31020	1kΩ 5% 0.062W 0603
3O61	2322 702 60759	75Ω 5% 0603
3O62	2322 702 60759	75Ω 5% 0603
3O63	3198 021 31010	100Ω 5% 0.062W 0603
3O64	3198 021 31010	100Ω 5% 0.062W 0603
3O66	3198 021 31010	100Ω 5% 0.062W 0603
3O67	3198 021 90030	Jumper 0603
3O69	3198 021 31010	100Ω 5% 0.062W 0603
3O70	3198 021 31010	100Ω 5% 0.062W 0603
3O71	3198 021 31010	100Ω 5% 0.062W 0603
3O72	3198 021 31010	100Ω 5% 0.062W 0603
3O74	3198 021 31010	100Ω 5% 0.062W 0603
3O75	3198 021 31020	1kΩ 5% 0.062W 0603
3O76	3198 021 31010	100Ω 5% 0.062W 0603
3O77	3198 021 31020	1kΩ 5% 0.062W 0603
3O78	3198 021 31010	100Ω 5% 0.062W 0603
3O79	3198 021 31020	1kΩ 5% 0.062W 0603
3O81	3198 021 31020	1kΩ 5% 0.062W 0603
3O82	3198 021 31510	150Ω 5% 0.062W 0603
3O83	3198 021 31020	1kΩ 5% 0.062W 0603
3O97	3198 021 31510	150Ω 5% 0.062W 0603
9O00	3198 021 90030	Jumper 0603
9O01	3198 021 90030	Jumper 0603
9O15	3198 021 90030	Jumper 0603
9O40	3198 021 90030	Jumper 0603

5O00	3198 018 90060	Bead 30Ω at 100MHz

6O02	3198 020 51290	BZX384-C12
6O04	9340 548 55115	PDZ6.8B
6O05	3198 010 10630	BAS316
6O06	3198 010 10630	BAS316
6O07	9340 548 55115	PDZ6.8B
6O08	9340 548 55115	PDZ6.8B
6O09	9340 548 55115	PDZ6.8B
6O10	9340 548 55115	PDZ6.8B
6O12	9340 548 55115	PDZ6.8B
6O14	9340 548 55115	PDZ6.8B
6O15	9340 548 55115	PDZ6.8B
6O16	9340 548 55115	PDZ6.8B
6O17	9340 548 55115	PDZ6.8B
6O18	3198 010 10630	BAS316
6O19	9340 548 55115	PDZ6.8B
6O21	9340 548 55115	PDZ6.8B
6O22	3198 020 51290	BZX384-C12
6O24	9340 548 55115	PDZ6.8B
6O30	9340 548 55115	PDZ6.8B
6O31	9340 548 55115	PDZ6.8B
6O32	9340 548 55115	PDZ6.8B
6O33	9340 548 55115	PDZ6.8B
6O34	9340 548 55115	PDZ6.8B
6O35	9340 548 55115	PDZ6.8B
6O36	9340 548 55115	PDZ6.8B
6O37	9340 548 55115	PDZ6.8B
6O38	3198 020 52780	BZX384-C2V7

7O00	9351 869 40118	74HC4053PW
7O01	3198 010 42030	BC847B
7O02	3198 010 42030	BC847B
7O03	3198 010 42030	BC847B
7O04	3198 010 42030	BC847B
7O05	3198 010 42030	BC847B
7O06	3198 010 42030	BC847B
7O07	3198 010 42030	BC847B
7O10	9351 869 40118	74HC4053PW
7O12	3198 010 42030	BC847B
7O15	3198 010 42030	BC847B
7O24	3198 010 42030	BC847B
7O25	3198 010 42030	BC847B

Side I/O Assy [D]

Various

1001	2422 026 05133	Connector SVHS 4p f
1002	4822 267 10975	Soc. CINCH f YeWhRd
1005	2422 033 00486	Soc. USB 4p F
1010	4822 267 31014	Soc. headphone
1050	2422 549 44768	Bead 90Ω at 100MHz
1H01	2422 033 00486	Soc. USB 4p F
1M36	2422 025 17179	Connector 11p m

2003	2022 552 05679	1µF 10% 16V 0805
2004	3198 016 36810	680pF 25V 0603
2005	2020 552 94427	100pF 5% 50V
2006	3198 016 36810	680pF 25V 0603
2007	2020 552 94427	100pF 5% 50V
2008	2238 916 15641	22nF 10% 25V 0603
2009	5322 126 11583	10nF 10% 50V 0603
2010	2238 916 15641	22nF 10% 25V 0603
2011	5322 126 11583	10nF 10% 50V 0603

3000	4822 051 30759	75Ω 5% 0.062W
3004	4822 051 30759	75Ω 5% 0.062W
3008	4822 051 30222	2.2kΩ 5% 0.062W
3009	4822 051 30102	1kΩ 5% 0.062W
3010	4822 051 30333	33kΩ 5% 0.062W
3011	4822 051 30392	3.9Ω 5% 0.063W 0603
3012	4822 051 30102	1kΩ 5% 0.062W
3013	4822 051 30333	33kΩ 5% 0.062W
3016	4822 051 30103	10kΩ 5% 0.062W
3020	4822 051 30103	10kΩ 5% 0.062W
9004	4822 051 30008	Jumper 0603
9005	4822 051 30008	Jumper 0603
9006	4822 051 30008	Jumper 0603
9007	4822 051 30008	Jumper 0603
9008	4822 051 30008	Jumper 0603
9009	4822 051 30008	Jumper 0603
9010	4822 051 30008	Jumper 0603
9011	4822 051 30008	Jumper 0603

5000	2422 549 44197	Bead 220Ω at 100MHz

6000	4822 130 11416	PDZ6.8B
6001	4822 130 11416	PDZ6.8B
6002	4822 130 11416	PDZ6.8B
6003	4822 130 11416	PDZ6.8B
6004	4822 130 11416	PDZ6.8B
6005	4822 130 11416	PDZ6.8B
6006	4822 130 11416	PDZ6.8B
6007	4822 130 11416	PDZ6.8B
6008	4822 130 11416	PDZ6.8B
6009	4822 130 11416	PDZ6.8B
6010	4822 130 11416	PDZ6.8B
6011	4822 130 11416	PDZ6.8B

Top control Assy [E]

Various

0345	2422 025 16544	Connector 6p m
1701	4822 276 13775	Switch 1p 0.1A 12V
1702	4822 276 13775	Switch 1p 0.1A 12V
1703	4822 276 13775	Switch 1p 0.1A 12V
1704	4822 276 13775	Switch 1p 0.1A 12V
1705	4822 276 13775	Switch 1p 0.1A 12V
1710	4822 276 14007	Switch 2p 0.1A 12V
8345	3104 311 08141	Cable 6P/480/6P

3008	4822 117 10845	620Ω 1% 0.1W
3010	4822 117 11534	1.1kΩ 1% 0.1W
3011	4822 117 11951	2kΩ 1% 0.1W
3013	4822 117 13528	200Ω 1% 0.125W 0805
3014	3198 031 03910	390Ω 1% 0402
3017	4822 051 30339	33Ω 5% 0.062W
3018	4822 051 30339	33Ω 5% 0.062W
3019	4822 051 30339	33Ω 5% 0.062W
3020	4822 051 30339	33Ω 5% 0.062W
3021	4822 051 30339	33Ω 5% 0.062W
3022	4822 051 30339	33Ω 5% 0.062W
3023	4822 051 30339	33Ω 5% 0.062W
3024	4822 051 30339	33Ω 5% 0.062W
3025	4822 051 30339	33Ω 5% 0.062W
3026	4822 051 30339	33Ω 5% 0.062W
3027	4822 051 30339	33Ω 5% 0.062W
3028	4822 051 30339	33Ω 5% 0.062W
3999	4822 117 13602	2.2kΩ 5% 0.01W 0402
9000	4822 117 13605	Jumper 0402

6001	9322 198 19685	SML512BC2T
6002	9322 198 19685	SML512BC2T
6003	9322 198 19685	SML512BC2T
6004	9322 198 19685	SML512BC2T
6005	9322 198 19685	SML512BC2T
6006	9322 198 19685	SML512BC2T
6007	9322 198 19685	SML512BC2T
6008	9322 198 19685	SML512BC2T
6009	9322 198 19685	SML512BC2T
6010	9322 198 19685	SML512BC2T
6011	9322 198 19685	SML512BC2T
6012	9322 198 19685	SML512BC2T

LED + Switch Assy [J]

Various

0345	2422 025 16961	Connector 6p m SMD
1040	9322 206 81667	TSOP34836YA1
1M01	2422 025 17103	Connector 3p m SMD
1M20	2422 025 17441	Connector 12p m

2030	4822 124 23002	10µF 16V
2040	4822 124 12095	100µF 20% 16V
2060	5322 124 41945	22µF 20% 35V
2070	4822 126 14583	470nF 10% 16V 0805
2071	4822 124 23002	10µF 16V

3030	3198 031 04720	4.7kΩ 5% 0402
3031	4822 117 12889	270kΩ 1% 0.063W 0603
3032	2322 705 70184	180Ω 5% 0402
3033	4822 051 30102	1kΩ 5% 0.062W
3034	4822 117 13548	1kΩ 5% 0402
3035	3198 031 04720	4.7kΩ 5% 0402
3036	3198 031 02280	2.2Ω 5% 0.1W 0402
3037	3198 031 02280	2.2Ω 5% 0.1W 0402
3040	4822 117 13597	330Ω 5% 0402 0.01W
3041	4822 117 13606	10kΩ 5% 0.01W 0402
3042	3198 031 06820	6.8kΩ 5% 0.01W 0402
3051	4822 117 13597	330Ω 5% 0402 0.01W
3060	4822 117 13606	10kΩ 5% 0.01W 0402
3061	4822 051 30331	330Ω 5% 0.062W
3062	4822 117 11373	100Ω 1% 0805
3063	4822 117 13606	10kΩ 5% 0.01W 0402
3064	4822 117 11373	100Ω 1% 0805
3070	2322 705 70475	4.7MΩ 5% 0402
3071	2322 705 70475	4.7MΩ 5% 0402
3072	4822 117 13548	1kΩ 5% 0402
3073	3198 031 03320	3.3kΩ 5% 0402
3074	4822 117 13606	10kΩ 5% 0.01W 0402
3075	3198 031 04720	4.7kΩ 5% 0402
3078	3198 031 03320	3.3kΩ 5% 0402
3079	3198 031 03320	3.3kΩ 5% 0402
9010	4822 117 13605	Jumper 0402
9013	4822 117 13605	Jumper 0402
9019	4822 117 13605	Jumper 0402
9022	4822 051 30008	Jumper 0603
9024	4822 051 30008	Jumper 0603
9026	4822 117 13605	Jumper 0402
9027	4822 117 13605	Jumper 0402
9040	4822 117 13605	Jumper 0402
9043	4822 117 13605	Jumper 0402

6030	4822 130 11397	BAS316
6031	4822 130 11397	BAS316
6051	4822 130 83915	TLMV3100
6060	9322 198 19685	SML512BC2T
6061	4822 130 11397	BAS316
6070	9322 140 63685	TEMD5000

7030	3198 010 42320	BC857BW
7031	5322 130 62804	BCP53
7032	3198 010 42310	BC847BW
7060	3198 010 42310	BC847BW
7061	3198 010 42310	BC847BW
7070	9322 192 63668	LM358P

LCD Standby / Audio [SA]

Various

1304	2422 025 10647	Connector 4p m
1305	4822 267 10735	Connector 3p
1306	2422 025 16374	Connector 2p m
1307	2422 025 10647	Connector 4p m
1309	2422 025 11143	Connector 3p m
1316	2422 025 10772	Connector 12p m
1317	2422 025 10772	Connector 12p m
1318	2422 025 08149	Connector 6p m
1735	4822 267 10918	Connector 3p
1736	2422 025 10768	Connector 3p m
1739	2422 025 10769	Connector 9p m
1M02	2422 025 11244	Connector 7p m
1M10	2422 025 09406	Connector 4p m

2101▲	4822 121 51598	2.2nF 5% 400V
2102	4822 124 40207	100µF 20% 25V
2103	2020 552 94427	100pF 5% 50V
2105	2020 552 94427	100pF 5% 50V
2107▲	2020 024 90718	10µF 20% 450V
2108▲	2020 024 90718	10µF 20% 450V
2109	2022 552 05679	1µF 10% 16V 0805
2110	2022 552 05679	1µF 10% 16V 0805
2111	4822 121 43526	47nF 5% 250V
2112	5322 126 11583	10nF 10% 50V 0603
2123	2238 586 59812	100nF 20% 50V 0603
2124	4822 124 40248	10µF 20% 63V
2129	5322 126 11578	1nF 10% 50V 0603
2131	2238 586 15641	22nF 10% 50V 0603
2132	4822 124 40207	100µF 20% 25V
2140	4822 124 40248	10µF 20% 63V
2141	4822 126 14583	470nF 10% 16V 0805
2144	2022 552 05679	1µF 10% 16V 0805
2145	4822 126 13881	470pF 5% 50V
2149	2022 552 05679	1µF 10% 16V 0805
2150	4822 124 12379	220µF 25V
2152	4822 121 70162	10nF 5% 400V
2153	5322 126 11582	6.8nF 10% 63V
2154	3198 017 31530	15nF 20% 50V 0603
2160	4822 124 21913	1µF 20% 63V
2163	4822 124 40207	100µF 20% 25V
2506▲	2252 811 95017	470pF 10% 250V
2507	4822 126 13682	100pF 5% 1kV
2508	4822 124 40764	22µF 100V
2510	2020 021 91668	2200µF 20% 10V
2511	4822 124 12379	220µF 25V
2513▲	4822 126 10206	2.2nF 10% 500V
2515	4822 126 14238	2.2nF 50V 0603
2533	4822 124 40207	100µF 20% 25V
2534	2022 552 05679	1µF 10% 16V 0805
2535	5322 126 11583	10nF 10% 50V 0603
2536	5322 126 11583	10nF 10% 50V 0603
2537	4822 126 14238	2.2nF 50V 0603
2538	5322 126 11583	10nF 10% 50V 0603
2539	2022 552 05679	1µF 10% 16V 0805
2540	5322 126 11583	10nF 10% 50V 0603
2544	5322 126 11583	10nF 10% 50V 0603
2702	5322 126 11578	1nF 10% 50V 0603
2704	5322 126 11578	1nF 10% 50V 0603
2705	2020 552 96684	470nF 10% 25V 0805

2706	2222 580 15649	100nF 10% 50V 0805
2707	4822 126 14585	100nF 10% 0805 50V
2708	2020 552 96326	220nF 10% 16V
2709	4822 126 13881	470pF 5% 50V
2710	4822 126 13881	470pF 5% 50V
2711	5322 126 11578	1nF 10% 50V 0603
2712	2020 552 96683	220nF 10% 50V
2713	2020 552 96684	470nF 10% 25V 0805
2714	3198 017 33330	33nF 20% 16V 0603
2715	5322 126 11578	1nF 10% 50V 0603
2716	4822 126 14241	330pF 0603 50V
2717	5322 121 42498	680nF 5% 63V
2718	4822 122 33761	22pF 5% 50V
2719	5322 126 11578	1nF 10% 50V 0603
2720	2020 552 96326	220nF 10% 16V
2721	4822 126 13881	470pF 5% 50V
2722	4822 126 13881	470pF 5% 50V
2725	2020 552 94427	100pF 5% 50V
2726	3198 017 33330	33nF 20% 16V 0603
2727	5322 126 11578	1nF 10% 50V 0603
2728	4822 126 14241	330pF 0603 50V
2729	5322 121 42498	680nF 5% 63V
2764	4822 126 14491	2.2µF 10V 0805
2766	4822 126 14491	2.2µF 10V 0805
2768	4822 124 40255	100µF 20% 63V
2769	4822 124 40255	100µF 20% 63V
2777	2020 552 96683	220nF 10% 50V
2778	4822 124 40769	4.7µF 20% 100V
2779	2020 552 96683	220nF 10% 50V
2780	2020 552 96683	220nF 10% 50V
2781	2020 552 96683	220nF 10% 50V
2783	4822 124 41751	47µF 20% 50V
2786	2238 586 15641	22nF 10% 50V 0603
2788	4822 124 40255	100µF 20% 63V
2789	2020 552 96683	220nF 10% 50V
2790	4822 124 40255	100µF 20% 63V

3100	4822 051 30101	100Ω 5% 0.062W
3101	4822 053 20475	4.7MΩ 5% 0.25W
3102	2312 915 11002	1kΩ 1% 0.5W
3103	2312 915 11002	1kΩ 1% 0.5W
3104	4822 051 30479	47Ω 5% 0.062W
3105	4822 051 30221	220Ω 5% 0.062W
3106	4822 051 30391	390Ω 5% 0.062W
3107	4822 051 30391	390Ω 5% 0.062W
3108	4822 053 10478	4.7Ω 5% 1W
3109	4822 051 30391	390Ω 5% 0.062W
3110	4822 051 30391	390Ω 5% 0.062W
3111▲	4822 053 10152	1.5kΩ 5% 1W
3112	4822 051 30391	390Ω 5% 0.062W
3113	4822 117 12139	22Ω 5% 0.062W
3114	4822 051 30221	220Ω 5% 0.062W
3117	4822 051 30479	47Ω 5% 0.062W
3122	4822 051 30471	47Ω 5% 0.062W
3123	4822 051 30109	10Ω 5% 0.062W
3124	4822 051 30339	33Ω 5% 0.062W
3125	4822 117 12971	15Ω 5% 0603 0.62W
3126	4822 051 30103	10kΩ 5% 0.062W
3127	4822 051 30562	5.6kΩ 5% 0.063W 0603
3128	4822 117 13608	4.7Ω 5% 0603 0.62W
3132	4822 051 30333	33kΩ 5% 0.062W
3134	4822 051 30102	1kΩ 5% 0.062W
3135	4822 051 30331	330Ω 5% 0.062W
3138	4822 051 30105	1MΩ 5% 0.062W
3140	4822 051 30223	22kΩ 5% 0.062W
3141	4822 051 30471	47Ω 5% 0.062W
3142	4822 051 30123	12kΩ 5% 0.1W
3145	4822 051 30472	4.7Ω 5% 0.062W
3146	4822 051 30479	47Ω 5% 0.062W
3147	4822 051 30223	22kΩ 5% 0.062W
3148	4822 051 30479	47Ω 5% 0.062W
3149	4822 051 30103	10kΩ 5% 0.062W
3150	4822 051 30101	100Ω 5% 0.062W
3152	4822 051 30102	1kΩ 5% 0.062W
3153	4822 051 30223	22kΩ 5% 0.062W
3155	4822 050 21003	10kΩ 1% 0.6W
3156	4822 051 30102	1kΩ 5% 0.062W
3157	4822 051 30223	22kΩ 5% 0.062W
3158	4822 051 30479	47Ω 5% 0.062W
3159	4822 051 30479	47Ω 5% 0.062W
3160	4822 051 30102	1kΩ 5% 0.062W
3161	4822 051 30123	12kΩ 5% 0.1W
3171	4822 051 30101	100Ω 5% 0.062W
3172	4822 051 30333	33kΩ 5% 0.062W
3175	4822 051 30103	10kΩ 5% 0.062W
3176	4822 051 30103	10kΩ 5% 0.062W
3509	4822 053 10222	2.2kΩ 5% 1W
3511	4822 051 30683	68kΩ 5% 0.062W
3512	4822 051 30471	47Ω 5% 0.062W
3513	4822 051 30333	33kΩ 5% 0.062W
3515	4822 117 13632	100kΩ 1% 0603 0.62W
3516	4822 051 30472	4.7Ω 5% 0.062W
3517	4822 051 30223	22kΩ 5% 0.062W
3528	4822 051 30472	4.7Ω 5% 0.062W
3529	4822 051 30101	100Ω 5% 0.062W
3530	4822 051 30223	22kΩ 5% 0.062W
3531	4822 051 30153	15kΩ 5% 0.062W
3532	4822 051 30472	4.7Ω 5% 0.062W
3533	4822 051 30152	1.5Ω 5% 0.062W
3534	4822 051 30103	10kΩ 5% 0.062W
3538	4822 051 30101	100Ω 5% 0.062W
3539	4822 051 30471	47Ω 5% 0.062W
3540	4822 051 30222	2.2kΩ 5% 0.062W
3541	4822 051 30222	2.2kΩ 5% 0.062W
3542	4822 051 30103	10kΩ 5% 0.062W
3544	4822 051 30221	220Ω 5% 0.062W
3560	4822 051 30682	6.8Ω 5% 0.062W
3561	4822 051 30392	3.9Ω 5% 0.063W 0603
3562	4822 117 13608	4.7Ω 5% 0603 0.62W
3701	4822 051 30103	10kΩ 5% 0.062W
3702	4822 051 30682	6.8Ω 5% 0.062W
3703	4822 051 30333	33kΩ 5% 0.062W
3704	4822 117 10833	10kΩ 1% 0.1W
3705	4822 051 20828	8.2Ω 5% 0.1W
3706	4822 051 30472	4.7Ω 5% 0.062W
3707	4822 051 30683	68kΩ 5% 0.062W
3708	4822 051 30563	56kΩ 5% 0.062W
3709	4822 117 11503	220Ω 1% 0.1W
3710	4822 051 30223	22kΩ 5% 0.062W
3711	4822 050 21204	120kΩ 1% 0,6W
3712	4822 051 30103	10kΩ 5% 0.062W
3713	2312 915 11202	1.2kΩ 1% 0.5W
3714	4822 117 12925	47kΩ 1% 0.063W 0603
3715	4822 117 12925	47kΩ 1% 0.063W 0603
3716	4822 117 12925	47kΩ 1% 0.063W 0603
3717	4822 117 13632	100kΩ 1% 0603 0.62W
3718	4822 117 13632	100kΩ 1% 0603 0.62W
3721	4822 051 30472	4.7Ω 5% 0.062W
3722	4822 051 30683	68kΩ 5% 0.062W
3723	4822 051 30563	56kΩ 5% 0.062W
3724	4822 117 11503	220Ω 1% 0.1W
3725	4822 051 30223	22kΩ 5% 0.062W
3726	4822 117 11503	220Ω 1% 0.1W
3727	4822 117 11503	220Ω 1% 0.1W
3743	4822 117 11449	2.2kΩ 5% 0.1W 0805
3746	4822 051 30223	22kΩ 5% 0.062W
3747	4822 050 24703	47kΩ 1% 0.6W
3748	4822 051 30471	47Ω 5% 0.062W
3750	4822 117 11449	2.2kΩ 5% 0.1W 0805
3756	4822 117 11449	2.2kΩ 5% 0.1W 0805
3757	4822 117 11449	2.2kΩ 5% 0.1W 0805
3759	4822 051 30332	3.3Ω 5% 0.062W
3760	4822 051 30332	3.3Ω 5% 0.062W
3761	4822 051 20109	10Ω 5% 0.1W
3762	4822 051 30222	2.2kΩ 5% 0.062W
3763	4822 051 30222	2.2kΩ 5% 0.062W
3764	4822 051 20109	10Ω 5% 0.1W
3765	4822 051 30103	10kΩ 5% 0.062W
3766	4822 117 13632	100kΩ 1% 0603 0.62W
3767	4822 117 13632	100kΩ 1% 0603 0.62W
3768	4822 117 13632	100kΩ 1% 0603 0.62W
3790	4822 051 30272	2.7kΩ 5% 0.062W
3791	4822 051 30272	2.7kΩ 5% 0.062W
3792	4822 051 30183	18kΩ 5% 0.062W
3793	4822 051 30183	18kΩ 5% 0.062W
3798	4822 051 30153	15kΩ 5% 0.062W
3999	4822 051 30222	2.2kΩ 5% 0.062W
9008	4822 051 30008	Jumper 0603
9010	3198 036 90010	Wire 0.58mm
9011	3198 036 90010	Wire 0.58mm
9020	4822 051 30008	Jumper 0603
9110	4822 051 30008	Jumper 0603
9717	4822 051 30008	Jumper 0603
9737	4822 051 30008	Jumper 0603

5102	4822 526 10704	Bead 50 Ω at 100MHz
5103	4822 526 10704	Bead 50 Ω at 100MHz
5104	4822 157 11411	Bead 80Ω at 100MHz
5105	4822 157 11716	Bead 30Ω at 100MHz
5106	3198 018 31090	10µH 10% 0805
5108	4822 526 10704	Bead 50 Ω at 100MHz
5110	4822 157 71736	10µH 5%
5500	3104 308 21181	Transf. BS25320-00
5504	2422 536 00776	33µH 10%
5505	4822 157 11411	Bead 80Ω at 100MHz
5506	4822 157 11411	Bead 80Ω at 100MHz
5507	2422 536 00433	15µH 10%
5701	2422 536 00385	68µH 10%
5702	2422 536 00385	68µH 10%
5703	4822 157 11716	Bead 30Ω at 100MHz
5705	4822 157 11716	Bead 30Ω at 100MHz
5707	4822 157 11411	Bead 80Ω at 100MHz
5708	4822 157 11411	Bead 80Ω at 100MHz
5711	4822 157 11411	Bead 80Ω at 100MHz
5712	4822 157 11411	Bead 80Ω at 100MHz
5730	2422 549 00112	Line filt. 50V 3A
5731	2422 549 00112	Line filt. 50V 3A

6103	4822 130 10871	SBYV27-200
6104	9340 548 69115	PDZ27B
6105	4822 130 11522	UDZ15B
6106	9340 548 66115	PDZ20B
6108	4822 130 80622	BAT54
6114	4822 130 10871	SBYV27-200
6115	4822 130 80622	BAT54
6116	3198 020 55680	BZX384-C5V6
6120	4822 130 11397	BAS316
6121	4822 130 11397	BAS316
6122	9322 129 34685	BZM55-C3V9
6130	9340 548 61115	PDZ12B
6132	4822 130 11416	PDZ6.8B
6133	4822 130 11397	BAS316
6134	4822 130 11397	BAS316
6140	4822 130 41487	BYV95C
6142	4822 130 80622	BAT54
6144	4822 130 11397	BAS316
6147	9322 200 23685	SML4736
6148	4822 130 11397	BAS316
6149	3198 020 55680	BZX384-C5V6
6150	9340 292 50135	BZG03-C200
6151	9340 548 71115	PDZ33B
6153	9340 292 50135	BZG03-C200
6156	4822 130 11397	BAS316
6504	9340 418 70133	BYV27-600
6505	9322 161 78682	SB360L-7024
6511	9340 548 61115	PDZ12B
6531	4822 130 11522	UDZ15B
6532	4822 130 11397	BAS316
6540	4822 130 80622	BAT54
6562	9340 548 67115	PDZ22B
6701	4822 130 11397	BAS316
6702	4822 130 11551	UDZS10B
6703	4822 130 11551	UDZS10B

7100	3198 010 42320	BC857BW
7101	9340 219 30115	BC817-25W
7102▲	9322 160 34687	FQPF3N60
7105	3198 010 42320	BC857BW
7131▲	9340 557 69127	PHX9NQ20T
7140	3198 010 42310	BC847BW
7150▲	9322 149 04682	TCET1102
7501▲	9322 149 04682	TCET1102
7505	3198 010 42320	BC857BW
7506	3198 010 42310	BC847BW
7507	3198 010 42310	BC847BW
7509	3198 010 42310	BC847BW
7511	9337 331 10215	BST82
7512	9340 422 80115	PMSTA42
7531▲	9340 436 50115	BSP030
7532	3198 010 42310	BC847BW
7560	9340 219 30115	BC817-25W
7700	9322 163 86682	TDA7490L
7701	3198 010 42310	BC847BW
7703	3198 010 42310	BC847BW
7704	3198 010 42310	BC847BW
7705	3198 010 42310	BC847BW
7706	3198 010 42320	BC857BW
7707	3198 010 42310	BC847BW
7708	3198 010 42310	BC847BW
7709	3198 010 42310	BC847BW
7710	3198 010 42310	BC847BW
7711	3198 010 42310	BC847BW

11. Revision List

Manual xxxx xxx xxxx.0

- First release.