CANADA : http//biz.lgservice.com
USA : http//www.lgservice.com
: http//lgservice.com/techsup.html

PLASMA TV
SERVICE MANUAL

CHASSIS :AF-044A

MODEL : DU-42PX12X DU-42PX12XC

CAUTION
BEFORE SERVICING THE CHASSIS,
READ THE SAFETY PRECAUTIONS IN THIS MANUAL.

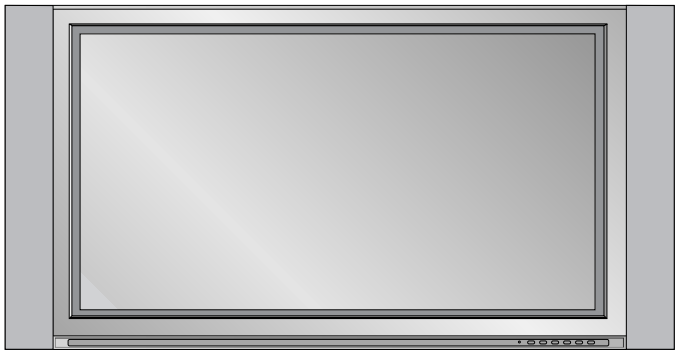

SAFETY PRECAUTIONS

IMPORTANT SAFETY NOTICE

Many electrical and mechanical parts in this chassis have special safety-related characteristics. These parts are identified by ⚠ in the Schematic Diagram and Replacement Parts List.
It is essential that these special safety parts should be replaced with the same components as recommended in this manual to prevent X-RADIATION, Shock, Fire, or other Hazards.
Do not modify the original design without permission of manufacturer.

General Guidance

An **Isolation Transformer should always be used** during the servicing of a receiver whose chassis is not isolated from the AC power line. Use a transformer of adequate power rating as this protects the technician from accidents resulting in personal injury from electrical shocks.

It will also protect the receiver and it's components from being damaged by accidental shorts of the circuitary that may be inadvertently introduced during the service operation.

If any fuse (or Fusible Resistor) in this monitor is blown, replace it with the same specified type.

When replacing a high wattage resistor (Oxide Metal Film Resistor, over 1W), keep the resistor 10mm away from PCB.

Keep wires away from high voltage or high temperature parts.

Leakage Current Cold Check(Antenna Cold Check)
With the instrument AC plug removed from AC source, connect an electrical jumper across the two AC plug prongs. Place the AC switch in the on positioin, connect one lead of ohm-meter to the AC plug prongs tied together and touch other ohm-meter lead in turn to each exposed metallic parts such as antenna terminals, phone jacks, etc.
If the exposed metallic part has a return path to the chassis, the measured resistance should be between 1MΩ and 5.2MΩ.
When the exposed metal has no return path to the chassis the reading must be infinite.
An other abnormality exists that must be corrected before the receiver is returned to the customer.

Leakage Current Hot Check (See below Figure)
Plug the AC cord directly into the AC outlet.
Do not use a line Isolation Transformer during this check.
Connect 1.5K/10watt resistor in parallel with a 0.15uF capacitor between a known good earth ground (Water Pipe, Conduit, etc.) and the exposed metallic parts.
Measure the AC voltage across the resistor using AC voltmeter with 1000 ohms/volt or more sensitivity.
Reverse plug the AC cord into the AC outlet and repeat AC voltage measurements for each esposed metallic part. Any voltage measured must not exceed 0.75 volt RMS which is corresponds to 0.5mA.
In case any measurement is out of the limits sepcified, there is possibility of shock hazard and the set must be checked and repaired before it is returned to the customer.

Leakage Current Hot Check circuit

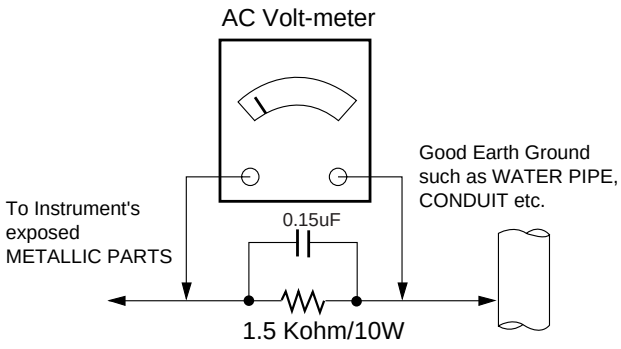

CANADA: LG Electronics Canada, Inc. 550 Matheson Boulevard East Mississauga, Ontario L4Z 4G3

USA : LG Customer Interactive Center
P.O.Box 240007, 201 James Record Road Huntsville, AL 35824
Digital TV Hotline 1-800-243-0000

TABLE OF CONTENTS

SPECIFICATIONS.....4

DESCRIPTION OF CONTROLS.....5

ADJUSTMENT INSTRUCTIONS 8

BLOCK DIAGRAM.....12

EXPLODED VIEW.....14

EXPLODED VIEW PARTS LIST 15

REPLACEMENT PARTS LIST 16

SCHEMATIC DIAGRAM.....

PRINTED CIRCUIT BOARDS.....

SPECIFICATIONS

MODEL	DU-42PX12X	DU-50PX10
Width (inches / mm)	41 / 1040	48.3 / 1226.2
Height (inches / mm)	27.5 / 699.5	30.6 / 778
Depth (inches / mm)	3.7 / 95	3.9 / 99
Weight (pounds / kg)	76.1 / 34.5	98.1 / 44.5
Power requirement	AC100-240V ~ 60Hz	
Television System	NTSC-M, ATSC	
Program Coverage	VHF 2 ~ 13, UHF 14 ~ 69, CATV 1 ~ 125, CADTV 1 ~ 135. DTV 2 ~ 69	
External Antenna Impedance	75 Ω	
Resolution	1024 x 768 (Dot)	1366 x 768 (Dot)
Color	16,770,000 (256 steps of each R, G and B)	
Operating Temperature Range	32 ~ 104°F (0 ~ 40°C)	
Operating Humidity Range	Less than 80%	
Maximum Elevation	6561 feet (2000m)	

- The specifications shown above may be changed without prior notice for quality improvement.

Controls

- This is a simplified representation of front panel.
  Image may be somewhat different from your TV.
- This manual explains the features available on the DU-50PX10 series TVs.

Front Panel Controls

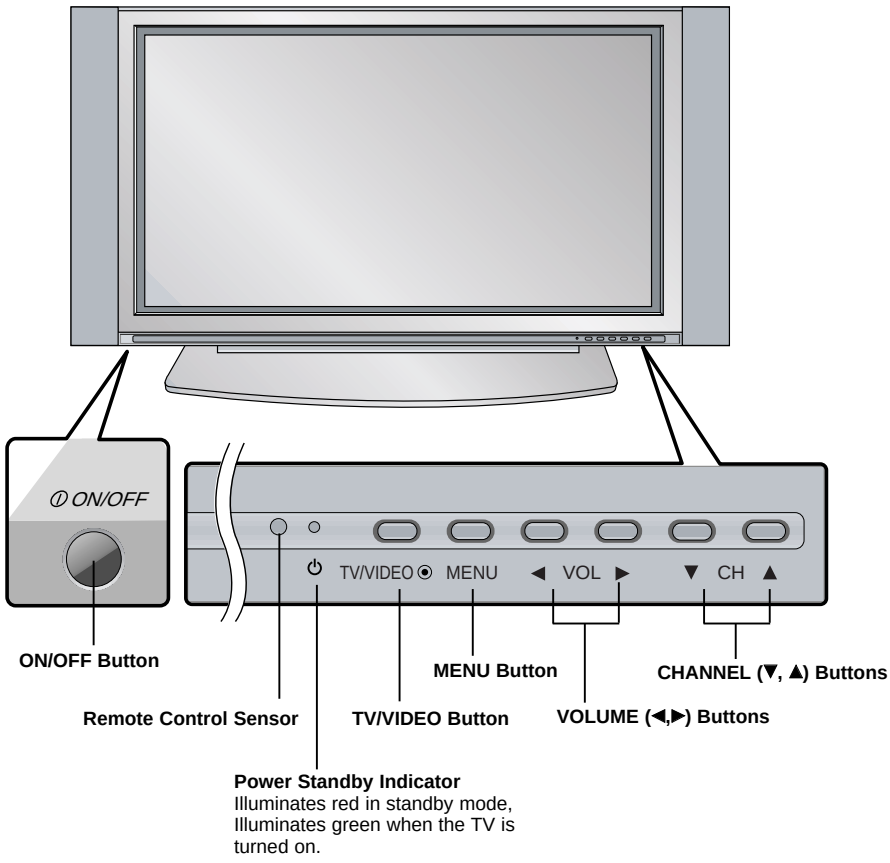

Connection Options

Back Connection Panel

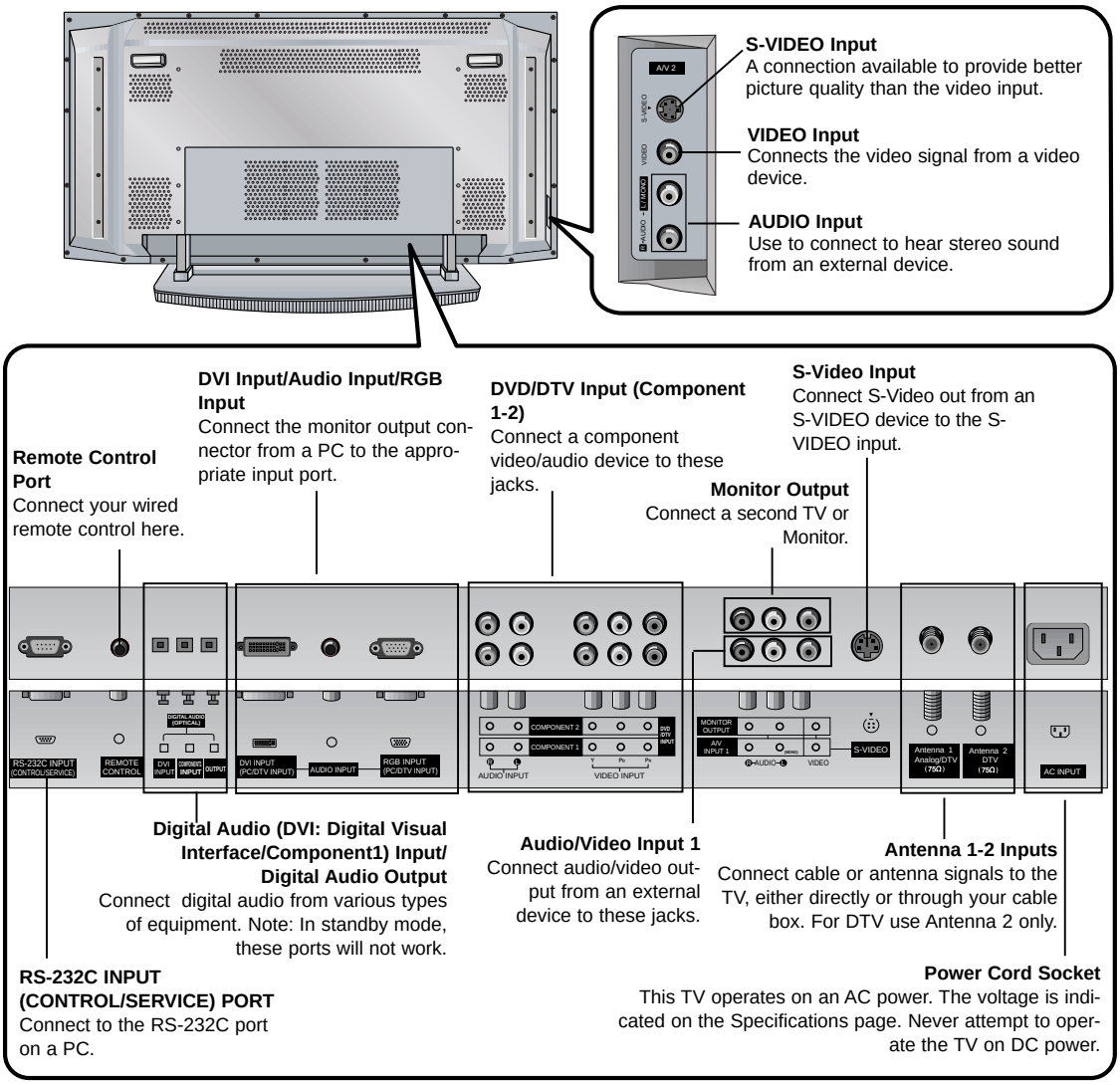

- This manual explains the features available on the DU-50PZ60/70 series TVs.

DESCRIPTION OF CONTROLS

Remote Control Key Functions

- When using the remote control, aim it at the remote control sensor on the TV.

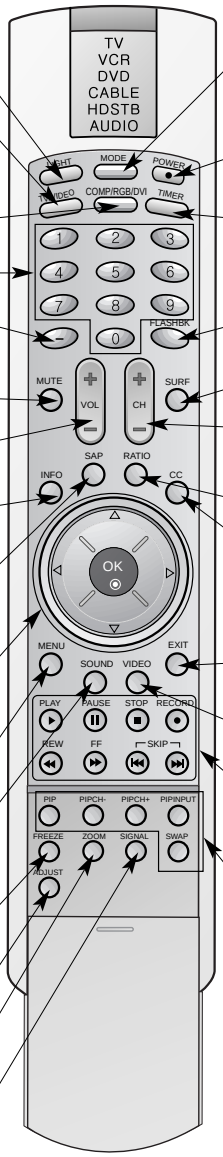

LIGHT
Illuminates the remote control buttons.

TV/VIDEO
Selects: DTV, Analog, Video1-2, Component 1-2, RGB-DTV (or RGB-PC), DVI-DTV (or DVI-PC) input sources.

COMP/RGB/DVI
Selects: Component 1-2, RGB-DTV (or RGB-PC), DVI-DTV (or DVI-PC) input sources.

NUMBER buttons

DASH
Used to enter a program number for multiple program channels such as 2—1,2—2,etc.

MUTE
Switches the sound on or off.

VOLUME UP/DOWN
Increases/decreases the sound level.

INFO
When you watch the TV, displays information on top of the screen. Not available in Component 1-2, RGB and DVI mode.

SAP
Selects MTS sound: Mono, Stereo, and SAP. Change the audio language in DTV mode.

THUMBSTICK (Up/Down/Left/Right/OK)
Allows you to navigate the on-screen menus and adjust the system settings to your preference.

MENU
Brings up the main menu to the screen.

SOUND
Selects the sound appropriate for the program's character.

FREEZE
Freezes the currently-viewed picture. Main picture is frozen in PIP/Twin picturre mode.

ADJUST
Adjusts screen position, clock, and phase in PC mode.

ZOOM
Enlarges the main picture size.

SIGNAL
Displays the digital signal strength.

MODE
Selects the remote operating mode: TV, VCR, DVD, CABLE, HDSTB or AUDIO. Select other operating modes, for the remote to operate external devices.

POWER
Turns your TV or any other programmed equipment on or off, depending on mode.

TIMER
Lets you select the amount of time before your TV turns itself off automatically.

FLASHBK
Tunes to the last channel viewed.

SURF
Use to scroll the Surf channel list.

CHANNEL UP/DOWN
Selects available channels found with EZ scan.

RATIO
Changes the aspect ratio.

CC
Select a closed caption: Off, EZ Mute, and On.

EXIT
Clears all on-screen displays and returns to TV viewing from any menu.

VIDEO
Adjusts the factory preset picture according to the room.

VCR/DVD BUTTONS
Control some video cassette recorders or DVD player ("RECORD" button is not available for DVD player).

PIP
Switches between PIP, POP (Picture-out-of-Picture) and Twin picture modes.

PIPCH-/PIPCH+
Changes to next higher/lower PIP channel.

PIP INPUT
Selects the input source for the sub picture.

SWAP
Exchanges the PIP/main images.

ADJUSTMENT INSTRUCTIONS

1. Application Object

These instructions are applied to all of the PDP TV, AF-044A.

2. Notes

(1) Because this is not a hot chassis, it is not necessary to use an isolation transformer. However, the use of isolation transformer will help protect test instrument.
(2) Adjustments must be done in the correct order.
(3) The adjustments must be performed in the circumstance of 25±5°C of temperature and 65±10% of relative humidity if there is no specific designation.
(4) The input voltage of the receiver be must kept 100~240V, 50/60Hz when adjusting.
(5) The receiver must be operational for about 15 minutes prior to the adjustments.

1) After receiving 100% white pattern, the receiver must be operated prior to adjustment. (Or 7. White Pattern condition in EZ - Adjust)
2) Enter into White Pattern
- Enter the Ez - Adjust by pressing ADJ Key on Service Remote Control (S R/C).
- Select the 7. White Pattern using CH +/- Key and press the Enter(■) Key.
Display the 100% Full White Pattern.

※ Set is activated HEAT-RUN without signal generator in this mode.

If you turn on a still screen more than 20 minutes (Especially Digital pattern(13 CH), Cross Hatch Pattern), an afterimage may occur in the black level part of the screen.

3. EPLD Download

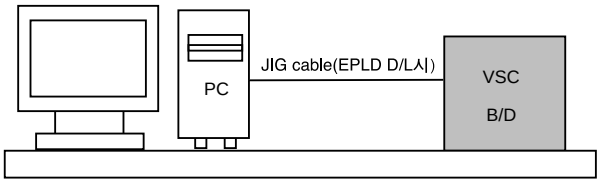

<Fig 1> Connection Diagram of EPLD Download

(1) Test Equipment: PC, Jig for download
(2) Connect the power of VSC B/D.
(3) Execute download program(Flash Loader) of PC.
(4) After executing execution hot key (Programmer), icon click
(5) End after confirming

Each PCB Assy must be checked by Check JIG Set before assembly. (Especially, be careful Power PCB Assy which can cause fatal Damage to PDP Module.)

4. POWER PCB Assy Voltage Adjustment (Va, Vs Voltage Adjustment)

4-1 Test Equipment : D.M.M 1EA

4-2 Connection Diagram for Measuring

Refer to Fig 2.

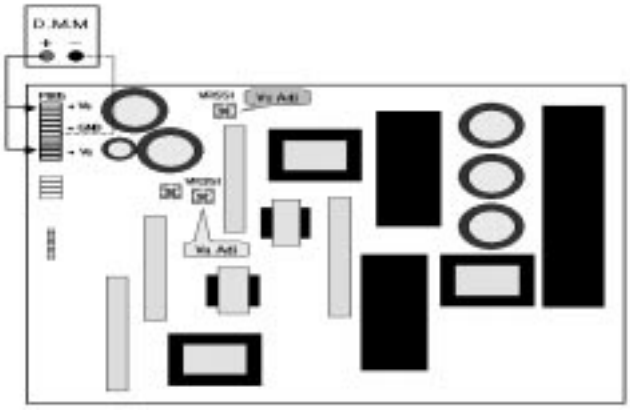

<Fig 2-1> Connection Diagram of Power Adjustment for Measuring (Power Board): 42PY10 Series

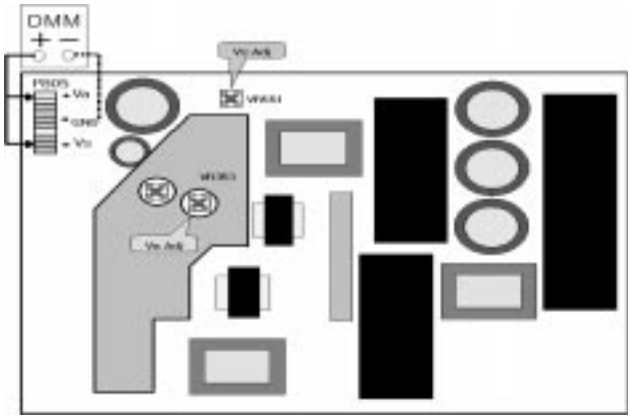

<Fig 2-2> Connection Diagram of Power Adjustment for Measuring (Power Board): 50PY10 Series

4-3 Adjustment Method(42/50PY10)

(1) Va Adjustment

1) Connect + terminal of D.M.M to Va pin of P805 and connect – terminal to GND pin of P805.
2) Adjust VR351 voltage to match that of the label on the Top/Right of the panel. (Deviation : ±0.5V)

(2) Vs adjustment

1) Connect + terminal of D.M.M to Vs pin of P805 and connect – terminal to GND pin of P805.
2) Adjust VR551 voltage to match that of the label on the Top/Right of the panel. (Deviation : ±0.5V)

4-4 Adjustment Method(60PY10)

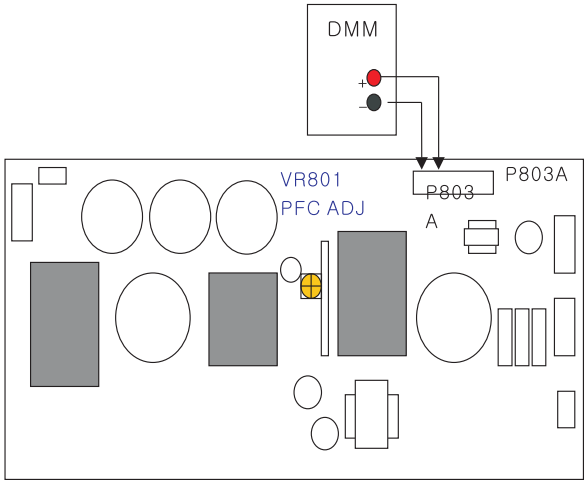

<Fig 2-3> Connection Diagram of Power Adjustment for Measuring (PFC Board): 60PY10 Series

(1) PFC Adjustment

1) After receiving 100% White Pattern, HEAT RUN.
2) Connect + terminal of DMM to PFC + terminal of P803A,connect - terminal of DMM to GND of P803A.
3) Adjust VR801 until voltage reading is 380V(±1V).

(2) Va Adjustment

1) Connect + terminal of D.M.M to Va pin of P8011 and connect – terminal to GND pin of P8011.
2) Adjust VR8401 voltage to match that of the label on the Top/Right of the panel.(Deviation : ±0.5V)

(3) Vs adjustment

1) Connect + terminal of D.M.M to Vs pin of P8011 and connect – terminal to GND pin of P8011.
2) Adjust VR8501 voltage to match that of the label on the Top/Right of the panel. (Deviation : ±0.5V)

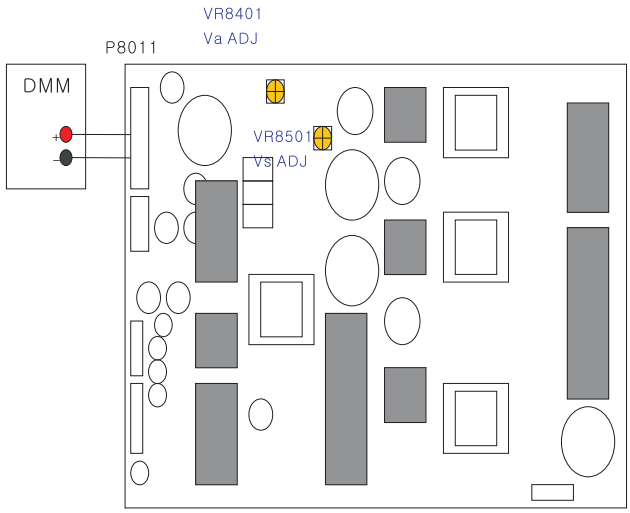

<Fig 2-4> Connection Diagram of Power Adjustment for Measuring (Power Board): 60PY10 Series

5. EDID(The Extended Display Identification Data)/DDC (Display Data Channel) download

This is the function that enables “Plug and Play".

(1) EDID DATA(42PY10)

• EDID for DVI (DDC (Display Data Channel) Data)

EDID table =

```
00 01 02 03 04 05 06 07 08 09 0A 0B 0C 0D 0E 0F
```

```
00 | 00 FF FF FF FF FF FF 00 1E 6D 01 01 01 01 01 01
10 | 06 0D 01 03 98 5C 34 96 08 CF 72 A3 57 4C B0 23
20 | 09 45 5D EF CE 00 31 D9 31 59 45 59 01 01 01 01
30 | 01 01 01 01 01 40 C3 1E 00 20 41 00 20 30 10 60
40 | 13 00 98 08 32 00 00 18 00 00 00 FC 00 4C 47 20
50 | 50 44 50 20 44 4E 2F 44 55 0A 00 00 00 FD 00 30
60 | 4C 1E 64 0F 00 0A 20 20 20 20 20 20 00 00 00 FC
70 | 00 2D 34 32 50 59 31 30 20 20 20 20 20 0A 00 2E
```

• EDID DATA for RGB

EDID table =

```
00 01 02 03 04 05 06 07 08 09 0A 0B 0C 0D 0E 0F
```

```
00 | 00 FF FF FF FF FF FF 00 1E 6D 01 01 01 01 01 01
10 | 06 0D 01 03 18 5C 34 96 08 CF 72 A3 57 4C B0 23
20 | 09 45 5D EF CE 00 31 D9 31 59 45 59 01 01 01 01
30 | 01 01 01 01 01 40 C3 1E 00 20 41 00 20 30 10 60
40 | 13 00 98 08 32 00 00 18 00 00 00 FC 00 4C 47 20
50 | 50 44 50 20 44 4E 2F 44 55 0A 00 00 00 FD 00 30
60 | 4C 1E 64 0F 00 0A 20 20 20 20 20 20 00 00 00 FC
70 | 00 2D 34 32 50 59 31 30 20 20 20 20 20 0A 00 AE
```

(2) EDID DATA(50PY10)

• EDID for DVI (DDC (Display Data Channel) Data)

EDID table =

```
00 01 02 03 04 05 06 07 08 09 0A 0B 0C 0D 0E 0F
_____________________________________________________
00 | 00 FF FF FF FF FF FF 00 1E 6D 01 01 01 01 01 01
10 | 03 0D 01 03 98 6E 3E 96 08 CF 72 A3 57 4C B0 23
20 | 09 45 5D EF CE 00 31 D9 31 59 45 59 01 01 01 01
30 | 01 01 01 01 01 40 C3 1E 00 20 41 00 20 30 10 60
40 | 13 00 4C 6C 42 00 00 1E 00 00 00 FC 00 4C 47 20
50 | 50 44 50 20 44 4E 2F 44 55 0A 00 00 00 FD 00 30
60 | 4C 1E 64 0F 00 0A 20 20 20 20 20 20 00 00 00 FC
70 | 00 2D 35 30 50 59 31 30 20 20 20 20 20 0A 00 E8
```

• EDID DATA for RGB

EDID table =

```
00 01 02 03 04 05 06 07 08 09 0A 0B 0C 0D 0E 0F
_____________________________________________________
00 | 00 FF FF FF FF FF FF 00 1E 6D 01 01 01 01 01 01
10 | 03 0D 01 03 08 6E 3E 96 08 CF 72 A3 57 4C B0 23
20 | 09 45 5D EF CE 00 31 D9 31 59 45 59 01 01 01 01
30 | 01 01 01 01 01 40 C3 1E 00 20 41 00 20 30 10 60
40 | 13 00 4C 6C 42 00 00 18 00 00 00 FC 00 4C 47 20
50 | 50 44 50 20 44 4E 2F 44 55 0A 00 00 00 FD 00 30
60 | 4C 1E 64 0F 00 0A 20 20 20 20 20 20 00 00 00 FC
70 | 00 2D 35 30 50 59 31 30 20 20 20 20 20 0A 00 7E
```

(3) EDID DATA(60PY10)

• EDID for DVI (DDC (Display Data Channel) Data)

EDID table =

```
00 01 02 03 04 05 06 07 08 09 0A 0B 0C 0D 0E 0F
_____________________________________________________
00 | 00 FF FF FF FF FF FF 00 1E 6D 01 01 01 01 01 01
10 | 03 0D 01 03 98 6E 3E 96 08 CF 72 A3 57 4C B0 23
20 | 09 45 5D EF CE 00 31 D9 31 59 45 59 01 01 01 01
30 | 01 01 01 01 01 40 C3 1E 00 20 41 00 20 30 10 60
40 | 13 00 4C 6C 42 00 00 1E 00 00 00 FC 00 4C 47 20
50 | 50 44 50 20 44 4E 2F 44 55 0A 00 00 00 FD 00 30
60 | 4C 1E 64 0F 00 0A 20 20 20 20 20 20 00 00 00 FC
70 | 00 2D 36 30 50 59 31 30 20 20 20 20 20 0A 00 E7
```

• EDID DATA for RGB

EDID table =

```
0 01 02 03 04 05 06 07 08 09 0A 0B 0C 0D 0E 0F
_____________________________________________________
00 | 00 FF FF FF FF FF FF 00 1E 6D 01 01 01 01 01 01
10 | 03 0D 01 03 08 6E 3E 96 08 CF 72 A3 57 4C B0 23
20 | 09 45 5D EF CE 00 31 D9 31 59 45 59 01 01 01 01
30 | 01 01 01 01 01 40 C3 1E 00 20 41 00 20 30 10 60
40 | 13 00 4C 6C 42 00 00 18 00 00 00 FC 00 4C 47 20
50 | 50 44 50 20 44 4E 2F 44 55 0A 00 00 00 FD 00 30
60 | 4C 1E 64 0F 00 0A 20 20 20 20 20 20 00 00 00 FC
70 | 00 2D 36 30 50 59 31 30 20 20 20 20 20 0A 00 7D
```

6. AD9883A-Set Adjustment

6-1 Synopsis

AD9883A-Set adjustment to set the black level and the Gain of optimum with an automatic movement from the analog => digital converter and RGB revises a deviation a function for it is.

6-2 Test Equipment

Service R/C, 801GF(802B, 802F, 802R) Pattern Generator (720P The Vertical 100% Color Bar Pattern output will be possible and the output level will accurately have to be revised with 0.7±0.1Vp-p)

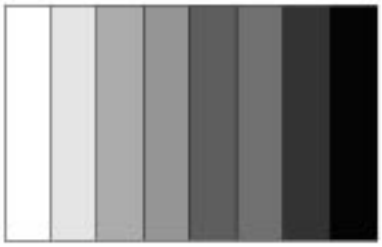

<Fig 3> Adjustment Pattern : 720P Vertical Color Bar

6-3 Adjustment

(1) Select Component1 or Component2 as the input with 100% Vertical Color Bar Pattern in 720p Mode.

(2) After receiving signal for at least 1 second, press the ADJ Key on the Service R/C to enter the 'Ez - Adjust' and select the '1. AD9883A-Set'.
Pressing the + Key to adjust with automatic movement.

(3) When the adjustment is over in the normality and the message which is a 'AD9883 - Set' becomes the display and the case which has not become the normality the message which is a 'AD9883A set error' becomes the display.

(4) Readjust after confirming the case Pattern or adjustment condition where the adjustment had not become the normality.

(5) After adjustment is complete, exit the adjustment mode by pressing the ADJ KEY.

7. Adjustment of White Balance

7-1. Required Equipment

(1) Color analyzer (CA-100 or similar product)
(2) Automatic adjustor (with automatic adjustment hour necessity and the RS-232C communication being possible)
(3) AV Pattern Generator

7-2. Connection Diagram of Equipment for Measuring (Automatic Adjustment)

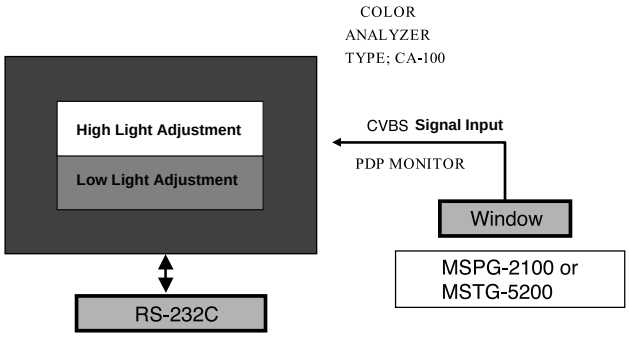

<Fig 4> Connection Diagram of Automatic Adjustment

7-3. Adjustment of White Balance

- Operate the Zero-calibration of the CA-100, then attach sensor to PDP module surface when you adjust.
- Manual adjustment is also possible by the following sequence.

(1) Enter 'Ez - Adjust' by pressing ADJ KEY on the Service Remote Control.
(2) Select "7. WHITE PATTERN" using CH +/- Key and HEAT RUN at least 15 minutes by pressing the ENTER Key.
(3) Receive the Window pattern signal from AV Pattern Generator. (AV Input)
(4) Set Picture condition to "CLEAR Image" and 'XD' off
(5) After attaching sensor to center of screen, select '3. White-Balance' of 'Ez - Adjust' by pressing the ADJ KEY on the Service R/C. Then enter adjustment mode by pressing the Right KEY (▶) .
(6) Adjust the Hight Light using R Gain/B Gain and adjust the Low Light using G Cut/B Cut.
(7) Adjust using Volume +/- KEY.
(G Gain : 123 / R Cut : 63(Fix.))

Hight Light : 150±10 Cd
Low Light : 5±2 Cd

X; 0.285±0.003
Y; 0.285±0.003

Color temperature: 9,000°K±500°K

(8) After adjustment is complete, move to Ez - Adjust screen by pressing the ENTER(■) KEY. Then exit the adjustment mode by press ADJ KEY.

7-4. Main/Sub Contrast Adjustment

Main/Sub contrast adjustment reduces the contrast difference of Main/Sub screen in PIP/POP/SPLIT Screen.

(1) After receiving signal for at least 1 second, press the ADJ KEY on the Service R/C and enter the 'Ez - Adjust' then select '2. VPX3226'.
Enter adjustment mode by pressing the Right KEY(▶).
(2) When entering adjustment mode, the image TV becomes 6CH SPLIT Screen with automatic movement as in below window.

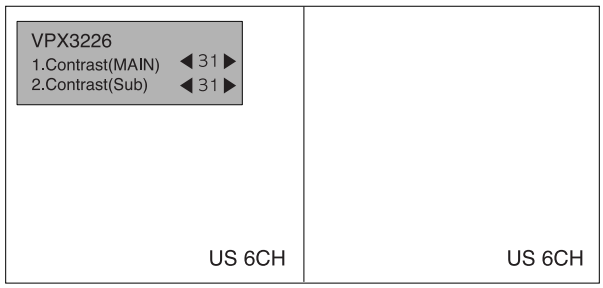

(3) The contour of "US 6CH" letter of left Main screen is most clear and it is clear, 1.Contrast (Main) after adjusting first, in order for right side Sub screen to contrast to become the left Main screen to contrast with same, 2.Contrast (Sub) it adjust. This time adjust using the volume +/- Key.
(4) After adjustment is complete, exit the adjustment mode by press ADJ KEY.

7-5. DVCO Adjustment

(1) After adjusting Main/Sub Contrast, receive a Digital Pattern.
(2) Select '4. DVCO-Set' by pressing the ADJ KEY on the Service R/C and adjust by pressing the Right KEY (▶) .
(3) When adjustment is complete,"DVCO-Set" will appear. Exit the adjustment mode menu by pressing ADJ key.

BLOCK DIAGRAM

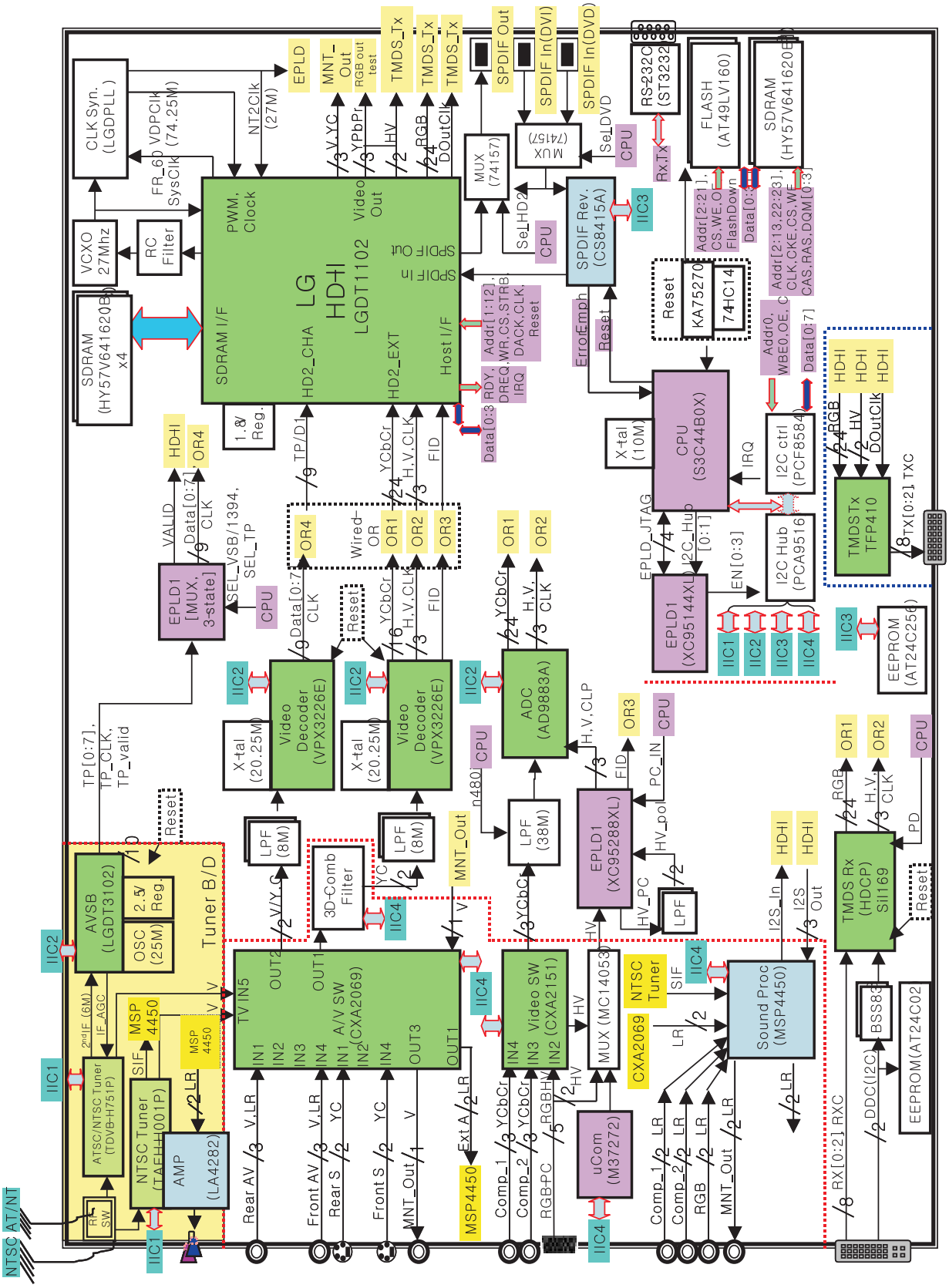

NOTES

EXPLODED VIEW

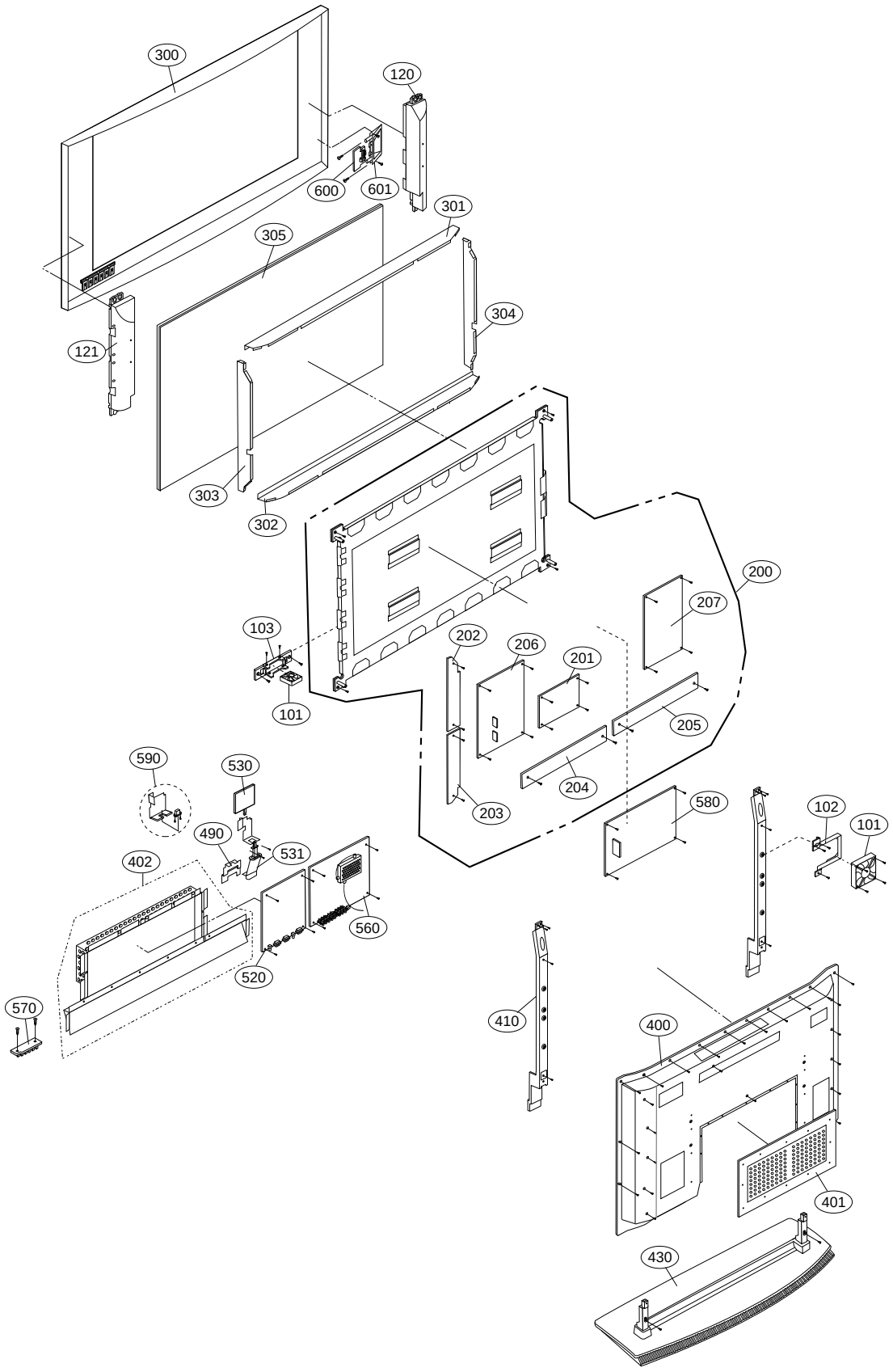

EXPLODED VIEW PARTS LIST

No.	Part No.	Description
101	5900V06008B	FAN,DC G6015S12B2-RG DONGYANG 60*60*15 7V 1900RPM 6/12V L=500MM
102	4980V01135A	SUPPORTER,FAN SECC(EGI) DN-42PX12X
103	4980V00D43A	SUPPORTER,FAN SECC(EGI) MZ-42PM10 NCT
120	6401VD0013H	SPEAKER ASSEMBLY,FULL RANGE(L) . RZ-42PX10 L
121	6401VD0013G	SPEAKER ASSEMBLY,FULL RANGE(R) . RZ-42PX10 R
200	6348Q-E042D	PDP,42 16:9 1024*768 PDP42X20000.AKLGG
201	6871QCH038A	PCB ASSEMBLY,DISPLAY CTRL ASSY 42X2 CTRL LGDP4023,4013
202	6871QDH068A	PCB ASSEMBLY,DISPLAY YDRV ASSY 42X2 YDRV TOP
203	6871QDH069A	PCB ASSEMBLY,DISPLAY YDRV ASSY 42X2 YDRV BOTTOM
204	6871QLH037A	PCB ASSEMBLY,DISPLAY XRLT ASSY 42X2 X-LEFT(TCP)
205	6871QRH043A	PCB ASSEMBLY,DISPLAY XRRT ASSY 42X2 X-RIGHT (TCP)
206	6871QYH030A	PCB ASSEMBLY,DISPLAY YSUS ASSY FOR 42X2
207	6871QZH034A	PCB ASSEMBLY,DISPLAY ZSUS ASSY FOR 42X2
300	3091V00684V	CABINET ASSEMBLY,DU-42PX12X NON AF044A LGECI
	3091V00684X	CABINET ASSEMBLY,DU-42PX12XC
	3091V00763C	CABINET ASSEMBLY,DU-42PX12X(LGEUS)
301	4980V01067D	SUPPORTER ASSY,AL FILTER TOP DN-42PX12X 6T
302	4980V01068D	SUPPORTER ASSY,AL FILTER BOT DN-42PX12X 6T
303	4980V01069D	SUPPORTER ASSY,AL FILTER RIGHT DN-42PX12X 6T
304	4980V01070D	SUPPORTER ASSY,AL FILTER LEFT DN-42PX12X 6T
305	3790V00709B	FILTER(MECH),LGM42-01 MITSUI 42 ETCHING MESH GLASS FILTER
400	3809V00444F	BACK COVER ASSEMBLY
	3809V00444S	BACK COVER ASSEMBLY,DU-42PX12X NON LGEUS BLACK
401	3301V00025D	PLATE ASSEMBLY,COVER VSC TUNER RU-42PX10 PRESS
	3301V00025X	PLATE ASSEMBLY,VSC TUNER COVER LGEUS BLACK DU-42PX12X
402	3301V00023J	PLATE ASSEMBLY,VSC TUNER BOTTOM DU-42PX12X
	3301V00023R	PLATE ASSEMBLY,AV VSC TUNER DU-42PX12X LGEUS BLACK
410	4980V01056A	SUPPORTER,MODULE AL RZ-42PY20 VERTICAL
430	3501V00171A	BOARD ASSEMBLY,BASE
	3501V00171F	BOARD ASSEMBLY,STAND DU-42PX12X LGEUS BLACK
490	4980V01057A	SUPPORTER,PCB EGI POWER SW. RZ-42PY20
520	6871VMMF17B	PCB ASSEMBLY,MAIN AF-044A 42PX12X DIGITAL MAIN
530	6871VSMZ74A	PCB ASSEMBLY,SUB PSW AF044B DN/U-50PY/X10
531	5020V00915A	BUTTON,POWER RZ-42PY20 ABS 1KEY
	5020V00915C	BUTTON,POWER DU-42PX12X ABS, AF-303S NON LGEUS
560	6871VSMF20A	PCB ASSEMBLY,SUB TUNER AF044A DN-50PY10 ANALOG
570	6871VSMF17B	PCB ASSEMBLY,SUB P/AMP AF044A DU-42PX10C CONTROL
580	3501V00181B	BOARD ASSEMBLY,POWER DN-42PY10X AF044A MURATA MPF7413
590	3141VSNB49C	CHASSIS ASSEMBLY,SUB RF03FA LINE FILTER ASSY. 7 TURN TWIST
600	6871VSMF13A	PCB ASSEMBLY,SUB A/V AF044A DN-50PY10 SIDE A/V
601	4811V00118B	BRACKET ASSEMBLY,DECO RU-42PX10 RF043A SIDE AV
	4811V00118G	BRACKET ASSEMBLY,SIDE AV DU-42PX12X LGEUS BLACK

REPLACEMENT PARTS LIST

For Capacitor & Resistors, the charactors at 2nd and 3rd digit in the P/No. means as follows;
CC, CX, CK, CN : Ceramic
CQ : Polyestor
CE : Electrolytic
RD : Carbon Film
RS : Metal Oxide Film
RN : Metal Film
RF : Fusible

RUN DATE : 2004.6.12

LOCA. NO	PART NO	DESCRIPTION
IC		
IC100	0IMMRNE002A	UPD64083GF3BA 100 QFP ST 3D YC LSI
IC101	0IKE702900G	KIA7029AF SOT-89 TP 2.9V
IC101	0ISO206900A	CXA2069Q QFP64 BK I2C BUS AV S/W
IC103	0IMCRSS016A	S3C44BOX01-EDRO LQFP-160 TRAY CPU
IC104	0IPH741400E	74HC14D 14SOP TP SHITTER TRIGGER
IC107	0IMMRAL016D	AT49BV160-70TI 48P
IC108	0IMMRAL016D	AT49BV160-70TI 48P
IC109	0IMMRSS041D	K4S641632H-TL75 54P
IC110	0IMMRSS041D	K4S641632H-TL75 54P
IC111	0IKE704200J	KIA7042AF SOT-89 TP 4.2V
IC112	0IZZVA0100A	M37272EFSP(OTP) DIP 42P
IC114	0IMCRAL006A	AT24C16AN-10SI-2.7 8P
IC200	0IMCRMN027B	MSP4440G-QA-C13-101
IC201	0IMCRPH026A	PCA9516PW PHILIPS 16P
IC201	0IMCRNL001A	NSP-6241B 64P DIGITAL AUDIO
IC202	0ICTMLG013A	LGDT1901A LG IC 24P
IC202	0IMCRTI028C	TAS5122DCAR 56P 30W STEREO
IC203	0IMCRSH001A	PQ05DZ1U SHARP 5, SMD
IC203	0IMCRCY002A	CY2309SC-1HT CYPRESS SOIC 16P
IC204	0IAL242561B	AT24C256W-10SI-2.7V 8P
IC204	0IMCRSJ001A	SC1565IST-1.8 3P SOT223
IC205	0IPRPML001A	MIC39100 3P SOT223
IC205	0IMCRXL004A	XC95288XL-10TQ144C XILINX 144P
IC206	0IMCRFA010A	KA7809R, FAIRCHILD 2P
IC206	0IMCRSG010A	ST3232CDR SOP16 R/TP RS232
IC301	0ITK118100B	TK11840L 8P SOT23L DC-DC CONVERTER
IC302	0ITK118100B	TK11840L 8P SOT23L DC-DC CONVERTER
IC303	0IMCRSH001A	PQ05DZ1U SHARP 5
IC304	0ICTMLG014A	LGDT3302 LG IC 100P
IC305	0ILNRMN005A	VPX3226E 44 VIDEO PIXEL DECODER
IC306	0ILNRMN005A	VPX3226E 44 VIDEO PIXEL DECODER
IC308	0IMCRAD002A	AD9883AKST-110 80P DIGITAL BOARD
IC310	0IMCRRH001A	BA033FP-E2 3P-SOP,TO252-3 R/TP 3.3V
IC400	0ICTMLG009A	LGDT1102 HD2 SBGA-432PIN
IC401	0IMMRSS041D	K4S641632H-TL75 54P
IC402	0IMMRSS041D	K4S641632H-TL75 54P
IC403	0IMMRSS041D	K4S641632H-TL75 54P
IC404	0IMMRSS041D	K4S641632H-TL75 54P
IC501	0IMCRS5003A	SIL169CT100 100P
IC502	0IMCRTH002A	THC63LVD103 64P
IC503	0IAL242110A	AT24C21-10SI-2.5 8P,SOP TP 1K EEPROM
IC600	0IMCRSO008A	CXA2151Q 48P QFP TRAY 60LCD
IC601	0IMO140530D	MC14053BDR2 16P
IC602	0IPH740800M	74F08D 14P 2-INPUT AND GATE LCD TV
IC603	0IAL242110A	AT24C21-10SI-2.5 8P,SOP TP 1K EEPROM
IC604	0IMCRFA013A	74LCX244MTC 20P
IC605	0ICB841500B	CS8415A-CZR 28P 96KHZ DIGITAL AUDIO
IC606	0ITO741570C	TC74LCX157FT 16P
IC607	0ITO741570C	TC74LCX157FT 16P
IC608	0ICB533100A	CS5331A-KSR 8SOIC
IC609	0IMO330780B	MC33078D 8/SOIC TP LINEAR +-18V OP AMP
IC701	0IMCRSH001A	PQ05DZ1U SHARP 5
IC702	0IPRPML001A	MIC39100 3P SOT223
IC703	0IMCRSJ001A	SC1565IST-1.8 SEMTECH 3P SOT223
IC704	0IMCRFA010A	KA7809R, FAIRCHILD 2P D-PAK
IC705	0IDS162100B	DS1621V 8P
IC706	0IPMGKE032A	KIA78R09F KEC 5PIN
IC707	0IPMGKE032A	KIA78R09F KEC 5PIN
IC800	0ICTMLG018A	LGDT4410 LG IC 176P
IC801	0IPRPML001A	MIC39100 3P SOT223
TRANSISTOR		
Q100	0TR150400BA	CHIP 2SA1504S(ASY) KEC
Q101	0TR102008AA	KRA102S
Q101	0TR150400BA	CHIP 2SA1504S(ASY) KEC
Q102	0TR387500AA	CHIP 2SC3875S(ALY) KEC
Q102	0TR150400BA	CHIP 2SA1504S(ASY) KEC
Q103	0TR387500AA	CHIP 2SC3875S(ALY) KEC
Q104	0TR150400BA	CHIP 2SA1504S(ASY) KEC
Q105	0TR150400BA	CHIP 2SA1504S(ASY) KEC
Q106	0TR150400BA	CHIP 2SA1504S(ASY) KEC
Q107	0TR150400BA	CHIP 2SA1504S(ASY) KEC
Q108	0TR387500AA	CHIP 2SC3875S(ALY) KEC
Q109	0TR150400BA	CHIP 2SA1504S(ASY) KEC
Q110	0TR150400BA	CHIP 2SA1504S(ASY) KEC
Q111	0TR387500AA	CHIP 2SC3875S(ALY) KEC
Q112	0TR150400BA	CHIP 2SA1504S(ASY) KEC
Q113	0TR387500AA	CHIP 2SC3875S(ALY) KEC
Q114	0TR150400BA	CHIP 2SA1504S(ASY) KEC
Q115	0TR150400BA	CHIP 2SA1504S(ASY) KEC
Q116	0TR387500AA	CHIP 2SC3875S(ALY) KEC
Q117	0TR387500AA	CHIP 2SC3875S(ALY) KEC
Q118	0TR387500AA	CHIP 2SC3875S(ALY) KEC
Q119	0TR150400BA	CHIP 2SA1504S(ASY) KEC
Q120	0TR387500AA	CHIP 2SC3875S(ALY) KEC
Q121	0TR387500AA	CHIP 2SC3875S(ALY) KEC
Q122	0TR387500AA	CHIP 2SC3875S(ALY) KEC
Q123	0TR387500AA	CHIP 2SC3875S(ALY) KEC
Q124	0TR387500AA	CHIP 2SC3875S(ALY) KEC
Q125	0TR387500AA	CHIP 2SC3875S(ALY) KEC
Q126	0TR387500AA	CHIP 2SC3875S(ALY) KEC
Q127	0TR150400BA	CHIP 2SA1504S(ASY) KEC
Q128	0TR387500AA	CHIP 2SC3875S(ALY) KEC
Q129	0TR387500AA	CHIP 2SC3875S(ALY) KEC

REPLACEMENT PARTS LIST

LOCA. NO	PART NO	DESCRIPTION
Q130	0TR387500AA	CHIP 2SC3875S(ALY) KEC
Q131	0TR387500AA	CHIP 2SC3875S(ALY) KEC
Q132	0TR387500AA	CHIP 2SC3875S(ALY) KEC
Q133	0TR387500AA	CHIP 2SC3875S(ALY) KEC
Q200	0TR387500AA	CHIP 2SC3875S(ALY) KEC
Q201	0TR387500AA	CHIP 2SC3875S(ALY) KEC
Q201	0TR150400BA	CHIP 2SA1504S(ASY) KEC
Q202	0TR387500AA	CHIP 2SC3875S(ALY) KEC
Q202	0TR150400BA	CHIP 2SA1504S(ASY) KEC
Q203	0TR150400BA	CHIP 2SA1504S(ASY) KEC
Q204	0TR150400BA	CHIP 2SA1504S(ASY) KEC
Q205	0TR387500AA	CHIP 2SC3875S(ALY) KEC
Q206	0TR387500AA	CHIP 2SC3875S(ALY) KEC
Q207	0TR102008AA	KRA102S SOT23 CHIP TR
Q301	0TR387500AA	CHIP 2SC3875S(ALY) KEC
Q301	0TR150400BA	CHIP 2SA1504S(ASY) KEC
Q302	0TR387500AA	CHIP 2SC3875S(ALY) KEC
Q302	0TR150400BA	CHIP 2SA1504S(ASY) KEC
Q303	0TR150400BA	CHIP 2SA1504S(ASY) KEC
Q303	0TR150400BA	CHIP 2SA1504S(ASY) KEC
Q304	0TR150400BA	CHIP 2SA1504S(ASY) KEC
Q304	0TR387500AA	CHIP 2SC3875S(ALY) KEC
Q305	0TR387500AA	CHIP 2SC3875S(ALY) KEC
Q305	0TR387500AA	CHIP 2SC3875S(ALY) KEC
Q306	0TR387500AA	CHIP 2SC3875S(ALY) KEC
Q306	0TR387500AA	CHIP 2SC3875S(ALY) KEC
Q307	0TR387500AA	CHIP 2SC3875S(ALY) KEC
Q308	0TR387500AA	CHIP 2SC3875S(ALY) KEC
Q309	0TR387500AA	CHIP 2SC3875S(ALY) KEC
Q501	0TR830009BA	BSS83
Q502	0TR830009BA	BSS83
Q505	0TR150400BA	CHIP 2SA1504S(ASY) KEC
Q506	0TR150400BA	CHIP 2SA1504S(ASY) KEC
Q507	0TR150400BA	CHIP 2SA1504S(ASY) KEC
Q600	0TR387500AA	CHIP 2SC3875S(ALY) KEC
Q601	0TR387500AA	CHIP 2SC3875S(ALY) KEC
Q602	0TR387500AA	CHIP 2SC3875S(ALY) KEC
Q605	0TR387500AA	CHIP 2SC3875S(ALY) KEC
Q606	0TR150400BA	CHIP 2SA1504S(ASY) KEC
Q607	0TR387500AA	CHIP 2SC3875S(ALY) KEC
Q613	0TR387500AA	CHIP 2SC3875S(ALY) KEC
Q614	0TR387500AA	CHIP 2SC3875S(ALY) KEC
Q615	0TR387500AA	CHIP 2SC3875S(ALY) KEC
Q616	0TR102009AG	CHIP KRC102S SOT-23
Q701	0TR387500AA	CHIP 2SC3875S(ALY) KEC
DIODE		
D109	0DL233309AC	LED,SAM2333
D200	0DD226239AA	CHIP KDS226 SOT-23
D201	0DD226239AA	CHIP KDS226 SOT-23
D202	0DD226239AA	CHIP KDS226 SOT-23

LOCA. NO	PART NO	DESCRIPTION
D203	0DD226239AA	CHIP KDS226 SOT-23
D204	0DZRM00248A	ZENERS,RLZ8.2B-TE11
D301	0DD184009AA	KDS184S CHIP 85V 300MA
D302	0DD184009AA	KDS184S CHIP 85V 300MA
D303	0DD226239AA	CHIP KDS226 SOT-23
D501	0DD184009AA	KDS184S CHIP 85V 300MA
D701	0DD226239AA	CHIP KDS226 SOT-23
D702	0DD100009AM	EU1ZV(1) TP SANKEN
DL700	0DL233309AC	LED,SAM2333
DL702	0DL233309AC	LED,SAM2333
DL703	0DL233309AC	LED,SAM2333
DL704	0DL233309AC	LED,SAM2333
DL705	0DL233309AC	LED,SAM2333
IC102	0DD184009AA	KDS184S CHIP 85V 300MA KEC TP
LD201	0DL200000CA	LED,SAM5670(DL-2LRG)
ZD101	0DR050008AA	SD05.TC SOD323 5V 5A 15A
ZD102	0DR050008AA	SD05.TC SOD323 5V 5A 15A
ZD103	0DR050008AA	SD05.TC SOD323 5V 5A 15A
ZD110	0DR050008AA	SD05.TC SOD323 5V 5A 15A
ZD501	0DZRM00178A	ZENERS,UDZS TE-17 5.1B
CAPACITOR		
C104	0CE1059K538	1UF KU 50V K
C105	0CE1059K538	1UF KU 50V K
C106	0CE106SF6DC	10UF MVG 16V 20%
C117	0CE106SF6DC	10UF MVG 16V 20%
C118	0CE105SK6DC	1UF MVG 50V M
C1200	0CE475SK6DC	4.7UF MVG 50V 20%
C1201	0CE475SK6DC	4.7UF MVG 50V 20%
C1203	0CE226SF6DC	22UF MVG 16V 20%
C121	0CE106SF6DC	10UF MVG 16V 20%
C1213	0CE107SF6DC	100UF MVG 16V M
C1216	0CE106SF6DC	10UF MVG 16V 20%
C1219	0CE106SF6DC	10UF MVG 16V 20%
C122	0CE106SF6DC	10UF MVG 16V 20%
C1221	0CE107SF6DC	100UF MVG 16V M
C1222	0CK105DF64A	1UF 2012 16V 20%
C1226	0CK105DF64A	1UF 2012 16V 20%
C1242	0CE108DJ618	1000UF STD 35V M
C1243	0CF4741L438	0.47UF D 63V 5%
C1244	0CF4741L438	0.47UF D 63V 5%
C1255	0CE476SF6DC	47UF MVG 16V M
C1258	0CE108DJ618	1000UF STD 35V M
C127	0CE107SF6DC	100UF MVG 16V M
C138	0CE107SF6DC	100UF MVG 16V M
C138	0CE476SF6DC	47UF MVG 16V M
C139	0CE107SF6DC	100UF MVG 16V M
C1400	0CE226SF6DC	22UF MVG 16V 20%
C143	0CE476SF6DC	47UF MVG 16V M
C144	0CE105SK6DC	1UF MVG 50V M
C146	0CE105SK6DC	1UF MVG 50V M

REPLACEMENT PARTS LIST

LOCA. NO	PART NO	DESCRIPTION
C148	0CE226SF6DC	22UF MVG 16V 20%
C149	0CE226SF6DC	22UF MVG 16V 20%
C150	0CE476SF6DC	47UF MVG 16V M
C152	0CE477SF6DC	470UF MVG 16V 20%
C156	0CE105SK6DC	1UF MVG 50V M
C157	0CE477SF6DC	470UF MVG 16V 20%
C158	0CE105SK6DC	1UF MVG 50V M
C1606	0CE226SF6DC	22UF MVG 16V 20%
C1607	0CE226SF6DC	22UF MVG 16V 20%
C161	0CE107SF6DC	100UF MVG 16V M
C161	0CE105SK6DC	1UF MVG 50V M
C165	0CE106SF6DC	10UF MVG 16V 20%
C166	0CE106SF6DC	10UF MVG 16V 20%
C167	0CE106SF6DC	10UF MVG 16V 20%
C169	0CE106SF6DC	10UF MVG 16V 20%
C170	0CE106SF6DC	10UF MVG 16V 20%
C171	0CE106SF6DC	10UF MVG 16V 20%
C172	0CE106SF6DC	10UF MVG 16V 20%
C174	0CE106SF6DC	10UF MVG 16V 20%
C202	0CE226SF6DC	22UF MVG 16V 20%
C202	0CE4763F618	47UF SRE 16V M
C205	0CE476SF6DC	47UF MVG 16V M
C206	0CE226SF6DC	22UF MVG 16V 20%
C207	0CE477DJ618	470UF STD 35V 20%
C208	0CE226SF6DC	22UF MVG 16V 20%
C212	0CE477SF6DC	470UF MVG 16V 20%
C213	0CE477SF6DC	470UF MVG 16V 20%
C214	0CE106SF6DC	10UF MVG 16V 20%
C214	0CE477SF6DC	470UF MVG 16V 20%
C215	0CE477DJ618	470UF STD 35V 20%
C216	0CE477SF6DC	470UF MVG 16V 20%
C217	0CE477SF6DC	470UF MVG 16V 20%
C223	0CE477SF6DC	470UF MVG 16V 20%
C224	0CE107SF6DC	100UF MVG 16V M
C232	0CE476SF6DC	47UF MVG 16V M
C233	0CE476SF6DC	47UF MVG 16V M
C234	0CE107SF6DC	100UF MVG 16V M
C235	0CE476SF6DC	47UF MVG 16V M
C236	0CE476SF6DC	47UF MVG 16V M
C236	0CE476SF6DC	47UF MVG 16V M
C244	0CE477SF6DC	470UF MVG 16V 20%
C245	0CE477SF6DC	470UF MVG 16V 20%
C251	0CE476SF6DC	47UF MVG 16V M
C252	0CE476SF6DC	47UF MVG 16V M
C253	0CE476SF6DC	47UF MVG 16V M
C254	0CE476SF6DC	47UF MVG 16V M
C255	0CE476SF6DC	47UF MVG 16V M
C260	0CE476SF6DC	47UF MVG 16V M
C264	0CE107SF6DC	100UF MVG 16V M
C265	0CE107SF6DC	100UF MVG 16V M
C266	0CE107SF6DC	100UF MVG 16V M

LOCA. NO	PART NO	DESCRIPTION
C272	0CE476SF6DC	47UF MVG 16V M
C274	0CE226SF6DC	22UF MVG 16V 20%
C280	0CE335VK6DC	3.3UF MV 50V 20%
C295	0CE335VK6DC	3.3UF MV 50V 20%
C297	0CE107SF6DC	100UF MVG 16V M
C298	0CE106SF6DC	10UF MVG 16V 20%
C299	0CE106SF6DC	10UF MVG 16V 20%
C301	0CK684DF56A	0.68UF 2012 16V 10%
C303	0CE226SF6DC	22UF MVG 16V 20%
C304	0CE476SF6DC	47UF MVG 16V M
C308	0CE105SK6DC	1UF MVG 50V M
C309	0CE476SF6DC	47UF MVG 16V M
C310	0CE106SF6DC	10UF MVG 16V 20%
C310	0CE476SF6DC	47UF MVG 16V M
C311	0CE226SF6DC	22UF MVG 16V 20%
C312	0CE226SF6DC	22UF MVG 16V 20%
C313	0CE106SF6DC	10UF MVG 16V 20%
C315	0CK684DF56A	0.68UF 2012 16V 10%
C315	0CE476VK6DC	47UF MV 50V 20%
C316	0CE476SF6DC	47UF MVG 16V M
C317	0CE226SF6DC	22UF MVG 16V 20%
C319	0CE476SF6DC	47UF MVG 16V M
C322	0CE106SF6DC	10UF MVG 16V 20%
C323	0CE226SF6DC	22UF MVG 16V 20%
C324	0CE476SF6DC	47UF MVG 16V M
C325	0CE106SF6DC	10UF MVG 16V 20%
C325	0CE476VK6DC	47UF MV 50V 20%
C326	0CE476SF6DC	47UF MVG 16V M
C327	0CE105SK6DC	1UF MVG 50V M
C327	0CE475SK6DC	4.7UF MVG 50V 20%
C329	0CE476SF6DC	47UF MVG 16V M
C330	0CE476SF6DC	47UF MVG 16V M
C331	0CE106SF6DC	10UF MVG 16V 20%
C332	0CE106SF6DC	10UF MVG 16V 20%
C333	0CE106SF6DC	10UF MVG 16V 20%
C334	0CE335VK6DC	3.3UF MV 50V 20%
C335	0CE226SF6DC	22UF MVG 16V 20%
C336	0CE225VK6DC	2.2UF MV 50V 20%
C338	0CE476SF6DC	47UF MVG 16V M
C343	0CK823DK56A	82000PF 2012 50V 10%
C343	0CE335VK6DC	3.3UF MV 50V 20%
C345	0CE225VK6DC	2.2UF MV 50V 20%
C348	0CE476SF6DC	47UF MVG 16V M
C349	0CE226SF6DC	22UF MVG 16V 20%
C350	0CE106SF6DC	10UF MVG 16V 20%
C351	0CE477SF6DC	470UF MVG 16V 20%
C352	0CE226SF6DC	22UF MVG 16V 20%
C353	0CE106SF6DC	10UF MVG 16V 20%
C357	0CE476SF6DC	47UF MVG 16V M
C367	0CE105SK6DC	1UF MVG 50V M
C369	0CE105SK6DC	1UF MVG 50V M

REPLACEMENT PARTS LIST

LOCA. NO	PART NO	DESCRIPTION
C370	0CE105SK6DC	1UF MVG 50V M
C379	0CE226SF6DC	22UF MVG 16V 20%
C380	0CE106SF6DC	10UF MVG 16V 20%
C383	0CE476SF6DC	47UF MVG 16V M
C501	0CE476SF6DC	47UF MVG 16V M
C512	0CE106SF6DC	10UF MVG 16V 20%
C516	0CE106SF6DC	10UF MVG 16V 20%
C524	0CE106SF6DC	10UF MVG 16V 20%
C536	0CE226SF6DC	22UF MVG 16V 20%
C538	0CE226SF6DC	22UF MVG 16V 20%
C601	0CE476SF6DC	47UF MVG 16V M
C615	0CE476SF6DC	47UF MVG 16V M
C622	0CE476SF6DC	47UF MVG 16V M
C628	0CE476SF6DC	47UF MVG 16V M
C629	0CE105SK6DC	1UF MVG 50V M
C636	0CE476SF6DC	47UF MVG 16V M
C639	0CE476SF6DC	47UF MVG 16V M
C641	0CE106SF6DC	10UF MVG 16V 20%
C654	0CE106SF6DC	10UF MVG 16V 20%
C655	0CE106SF6DC	10UF MVG 16V 20%
C656	0CE476SF6DC	47UF MVG 16V M
C660	0CE106SF6DC	10UF MVG 16V 20%
C663	0CE476SF6DC	47UF MVG 16V M
C666	0CE107SF6DC	100UF MVG 16V M
C667	0CE226SF6DC	22UF MVG 16V 20%
C668	0CE226SF6DC	22UF MVG 16V 20%
C673	0CE107SF6DC	100UF MVG 16V M
C677	0CE107SF6DC	100UF MVG 16V M
C716	0CE476SF6DC	47UF MVG 16V M
C718	0CE476SF6DC	47UF MVG 16V M
C721	0CE477SF6DC	470UF MVG 16V 20%
C722	0CE477SF6DC	470UF MVG 16V 20%
C723	0CE477SF6DC	470UF MVG 16V 20%
C724	0CE477SF6DC	470UF MVG 16V 20%
C726	0CE477SF6DC	470UF MVG 16V 20%
C727	0CE476SF6DC	47UF MVG 16V M
C728	0CE477SF6DC	470UF MVG 16V 20%
C729	0CE477SF6DC	470UF MVG 16V 20%
C730	0CE477SF6DC	470UF MVG 16V 20%
C732	0CE476SF6DC	47UF MVG 16V M
C733	0CE476SF6DC	47UF MVG 16V M
C734	0CE476SF6DC	47UF MVG 16V M
C735	0CE476SF6DC	47UF MVG 16V M
C738	0CE476SF6DC	47UF MVG 16V M
C739	0CE477SF6DC	470UF MVG 16V 20%
C740	0CE476SF6DC	47UF MVG 16V M
C743	0CE107SF6DC	100UF MVG 16V M
C745	0CE107SF6DC	100UF MVG 16V M
C748	0CE476SF6DC	47UF MVG 16V M
C749	0CE105SK6DC	1UF MVG 50V M
C751	0CE227VF6DC	220UF MV 16V 20%

LOCA. NO	PART NO	DESCRIPTION
C753	0CE476SF6DC	47UF MVG 16V M
C815	0CE476SF6DC	47UF MVG 16V M
C816	0CE476SF6DC	47UF MVG 16V M
C822	0CE476SF6DC	47UF MVG 16V M
C823	0CE476SF6DC	47UF MVG 16V M
C826	0CE106SF6DC	10UF MVG 16V 20%
JACK		
JK100	6612VJH020B	JACK,RCA PPJ122B 6P
JK101	380-363G	JACK,DIN 6046B-01S
JK101	380-068E	JACK,PHONE UEJ-CV-018
JK102	6612VJH020C	JACK,RCA PPJ122C 6P
JK103	6613V00026A	JACK ASSEMBLY,UJB-03-28A
JK200	6612VJH019B	JACK,RCA PPJ121B 4P
JK301	380-068E	JACK,PHONE UEJ-CV-018
JK601	6612BBBHN4A	JACK,DIN TOTX179
JK602	6612BBBHN4B	JACK,DIN TORX179
JK603	6612BBBHN4B	JACK,DIN TORX179
COIL		
L201	6140VB0004B	COIL,CHOKE 26UH
L202	6140VB0004B	COIL,CHOKE 26UH
L203	6140VB0004B	COIL,CHOKE 26UH
L204	6140VB0004B	COIL,CHOKE 26UH
L221	6140VB0022A	COIL,CHOKE CPS-0810 GET 22UH
L222	6140VB0022A	COIL,CHOKE CPS-0810 GET 22UH
L223	6140VB0022A	COIL,CHOKE CPS-0810 GET 22UH
L224	6140VB0022A	COIL,CHOKE CPS-0810 GET 22UH
L701	6140VB0004B	COIL,CHOKE 26UH
L703	6140VB0004B	COIL,CHOKE 26UH
L705	6140VB0004B	COIL,CHOKE 26UH
L706	6140VB0004B	COIL,CHOKE 26UH
RESISTOR		
AR102	0RRZVTA001C	4.7K OHM 1 / 16 W 1608 5%
AR103	0RRZVTA001D	22 OHM 1 / 16 W 1608 5%
AR501	0RRZVTA001D	22 OHM 1 / 16 W 1608 5%
AR502	0RRZVTA001D	22 OHM 1 / 16 W 1608 5%
AR503	0RRZVTA001D	22 OHM 1 / 16 W 1608 5%
AR504	0RRZVTA001D	22 OHM 1 / 16 W 1608 5%
AR505	0RRZVTA001D	22 OHM 1 / 16 W 1608 5%
AR506	0RRZVTA001D	22 OHM 1 / 16 W 1608 5%
AR801	0RRZVTA001D	22 OHM 1 / 16 W 1608 5%
AR802	0RRZVTA001D	22 OHM 1 / 16 W 1608 5%
AR803	0RRZVTA001D	22 OHM 1 / 16 W 1608 5%
AR804	0RRZVTA001D	22 OHM 1 / 16 W 1608 5%
AR805	0RRZVTA001D	22 OHM 1 / 16 W 1608 5%
AR806	0RRZVTA001D	22 OHM 1 / 16 W 1608 5%
R631	0RN1002F409	10K OHM 1/6 W 1.00%
R717	0RD0182H609	18 OHM 1/2 W 5.00%
R742	0RS0202K607	20 OHM 2 W 5.00%

REPLACEMENT PARTS LIST

LOCA. NO	PART NO	DESCRIPTION
R801	0RKZVTA001L	1.0M OHM 1/2 W 5%
R802	0RKZVTA001L	1.0M OHM 1/2 W 5%
VR301	0RRZVTA001C	4.7K OHM 1 / 16 W 1608 5%
VR302	0RRZVTA001B	MNR14-E0A-J-510 R OHM 51 OHM 5%
VR303	0RRZVTA001B	MNR14-E0A-J-510 R OHM 51 OHM 5%
VR304	0RRZVTA001B	MNR14-E0A-J-510 R OHM 51 OHM 5%
SWITCH		
SW101	6600VR1004A	SWITCH,TACT SKHMPW 5P
SW201	140-315A	SWITCH,TACT SKHV17910B 12V
SW202	140-315A	SWITCH,TACT SKHV17910B 12V
SW203	140-315A	SWITCH,TACT SKHV17910B 12V
SW204	140-315A	SWITCH,TACT SKHV17910B 12V
SW205	140-315A	SWITCH,TACT SKHV17910B 12V
SW206	140-315A	SWITCH,TACT SKHV17910B 12V
SW800	6600VM2006A	SWITCH,PUSH SDDF3PATP011
FILTER & CRYSTAL		
B1	6210VC0006A	FILTER,EMC FBMH3216 HM501NT
B16	6210VC0006A	FILTER,EMC FBMH3216 HM501NT
B17	6210VC0006A	FILTER,EMC FBMH3216 HM501NT
B18	6210VC0006A	FILTER,EMC FBMH3216 HM501NT
B3	6210VC0006A	FILTER,EMC FBMH3216 HM501NT
IC102	6200C000010	FILTER,B.P. H354LAI-K5202
IC103	6200C000010	FILTER,B.P. H354LAI-K5202
IC104	6200C000009	FILTER,B.P. H354LAI-K5225
IC105	6200C000009	FILTER,B.P. H354LAI-K5225
IC301	6200C000012	FILTER,B.P. TH355LSK-K5218
IC302	6200C000012	FILTER,B.P. TH355LSK-K5218
IC303	6200C000012	FILTER,B.P. TH355LSK-K5218
IC304	6200C000012	FILTER,B.P. TH355LSK-K5218
IC311	6200VKR002A	FILTER,B.P. LPF 2EA TA355LSK-K5216 38MHZ
IC312	6200VKR002A	FILTER,B.P. LPF 2EA TA355LSK-K5216 38MHZ
IC313	6200VKR002A	FILTER,B.P. LPF 2EA TA355LSK-K5216 38MHZ
L101	6210VC0006A	FILTER,EMC FBMH3216 HM501NT
L103	6210VC0006A	FILTER,EMC FBMH3216 HM501NT
L104	6210VC0006A	FILTER,EMC FBMH3216 HM501NT
L200	6210VC0006A	FILTER,EMC FBMH3216 HM501NT
L201	6210VC0006A	FILTER,EMC FBMH3216 HM501NT
L202	6210VC0006A	FILTER,EMC FBMH3216 HM501NT
L203	6210VC0006A	FILTER,EMC FBMH3216 HM501NT
L205	6210VC0006A	FILTER,EMC FBMH3216 HM501NT
L206	6210VC0006A	FILTER,EMC FBMH3216 HM501NT
L207	6210VC0006A	FILTER,EMC FBMH3216 HM501NT
L208	6210VC0006A	FILTER,EMC FBMH3216 HM501NT
L209	6210VC0006A	FILTER,EMC FBMH3216 HM501NT
L210	6210VC0006A	FILTER,EMC FBMH3216 HM501NT
L211	6210VC0006A	FILTER,EMC FBMH3216 HM501NT
L212	6210VC0006A	FILTER,EMC FBMH3216 HM501NT
L213	6210VC0006A	FILTER,EMC FBMH3216 HM501NT
L214	6210VC0006A	FILTER,EMC FBMH3216 HM501NT

LOCA. NO	PART NO	DESCRIPTION
L215	6210VC0006A	FILTER,EMC FBMH3216 HM501NT
L220	6210VC0006A	FILTER,EMC FBMH3216 HM501NT
L229	6210VC0006A	FILTER,EMC FBMH3216 HM501NT
L300	6210VC0006A	FILTER,EMC FBMH3216 HM501NT
L301	6210VC0006A	FILTER,EMC FBMH3216 HM501NT
L302	6210VC0006A	FILTER,EMC FBMH3216 HM501NT
L303	6210VC0006A	FILTER,EMC FBMH3216 HM501NT
L304	6210VC0006A	FILTER,EMC FBMH3216 HM501NT
L305	6210VC0006A	FILTER,EMC FBMH3216 HM501NT
L306	6210VC0006A	FILTER,EMC FBMH3216 HM501NT
L310	6210VC0006A	FILTER,EMC FBMH3216 HM501NT
L311	6210VC0006A	FILTER,EMC FBMH3216 HM501NT
L312	6210VC0006A	FILTER,EMC FBMH3216 HM501NT
L313	6210VC0006A	FILTER,EMC FBMH3216 HM501NT
L400	6210VC0006A	FILTER,EMC FBMH3216 HM501NT
L501	6210VC0006A	FILTER,EMC FBMH3216 HM501NT
L502	6210VC0006A	FILTER,EMC FBMH3216 HM501NT
L503	6210VC0006A	FILTER,EMC FBMH3216 HM501NT
L504	6210VC0006A	FILTER,EMC FBMH3216 HM501NT
L507	6210VC0006A	FILTER,EMC FBMH3216 HM501NT
L508	6210VC0006A	FILTER,EMC FBMH3216 HM501NT
L600	6210VC0006A	FILTER,EMC FBMH3216 HM501NT
L604	6210VC0006A	FILTER,EMC FBMH3216 HM501NT
L605	6210VC0006A	FILTER,EMC FBMH3216 HM501NT
L608	6210VC0005A	FILTER,EMC BK2125 HS 750
L609	6210VC0006A	FILTER,EMC FBMH3216 HM501NT
L611	6210VC0006A	FILTER,EMC FBMH3216 HM501NT
L612	6210VC0006A	FILTER,EMC FBMH3216 HM501NT
L613	6210VC0006A	FILTER,EMC FBMH3216 HM501NT
L702	6210VC0006A	FILTER,EMC FBMH3216 HM501NT
L704	6210VC0006A	FILTER,EMC FBMH3216 HM501NT
L707	6210VC0006A	FILTER,EMC FBMH3216 HM501NT
L801	6210VC0006A	FILTER,EMC FBMH3216 HM501NT
L801	6200J000025	FILTER,EMC TO-0927 200UH +-10%
L802	6210VC0006A	FILTER,EMC FBMH3216 HM501NT
L802	6200J000025	FILTER,EMC TO-0927 200UH +-10%
L803	6210VC0006A	FILTER,EMC FBMH3216 HM501NT
R102	6200JB8010L	FILTER,EMC MLB-201209-1000L-N2
R103	6200JB8010L	FILTER,EMC MLB-201209-1000L-N2
R106	6200JB8010L	FILTER,EMC MLB-201209-1000L-N2
R107	6200JB8010L	FILTER,EMC MLB-201209-1000L-N2
R108	6200JB8010L	FILTER,EMC MLB-201209-1000L-N2
X100	6212AB2015B	RESONATOR,CRYSTAL HC-49/SM5H 20MHZ
X101	6212AB2015E	RESONATOR,CRYSTAL HC-49/SM 10.0MHZ
X102	6202VDT002D	RESONATOR,CRYSTAL SX-1SMD 8.0MHZ
X200	156-A02M	RESONATOR,CRYSTAL HC49U 18.432MHZ
X300	6202VDB007B	RESONATOR,CRYSTAL HC49U 20.250MHZ

REPLACEMENT PARTS LIST

LOCA. NO	PART NO	DESCRIPTION
X301	6202VDB007B	RESONATOR,CRYSTAL HC49U 20.250MHZ
X600	6212AB2015A	RESONATOR,CRYSTAL HC-49/SM4H 4MHZ
MISCELLANEOUS		
F801	0FS1002B53K	FUSE,SLOW BLOW 10000MA 250V
JK102	6630VGA004B	CONNECTOR,D-SUB 9P 2.77MM
JK501	6630GZ00724	CONNECTOR,D-SUB 24P 1.91MM
JK600	6630VGA001C	CONNECTOR,D-SUB 15PIN 2.29MM
TU301	6700NFNS04F	TUNER,TDVL-H751P
TU302	6700VNF019E	TUNER,TAFH-H001P
X201	6204B60001B	OSCILLATOR, 27MHZ +/- 100 PPM 3.3V
X302	6204B47985K	OSCILLATOR,BMS-873R 25MHZ
ACCESSORIES		
A1	3828VA0479C	MANUAL,OWNERS AF044A
“	3828VA0479D	MANUAL,OWNERS *LGEUS
A2	6710V00116F	REMOTE CONTROLLER
A3	6410VUH005A	POWER CORD,PS204 125V/13A 2800MM
A4	6850J00004A	CABLE,DVI LVDS UL20276 AWG30 500MM
A5	6851V00019A	CABLE ASSEMBLY,RF CONN CABLE ASSY
A7	4810V00509A	BRACKET,WALL

LOCA. NO	PART NO	DESCRIPTION

P/NO : 3828VD0177G

Aug., 2004
Printed in Korea

CANADA: LG Electronics Canada, Inc. 550 Matheson Boulevard East Mississauga, Ontario L4Z 4G3

USA : LG Customer Interactive Center
P.O.Box 240007, 201 James Record Road Huntsville, AL 35824
ATTN : CIC

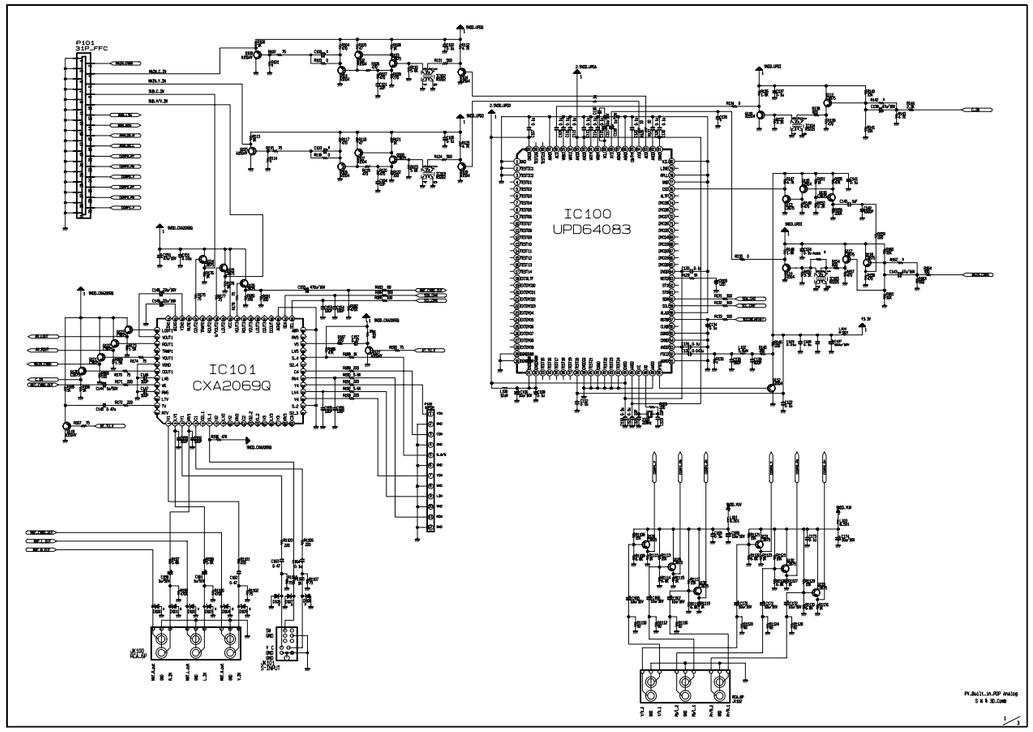
P101
31P_FFC
IC100
UPD64083
IC101
CXA2069Q

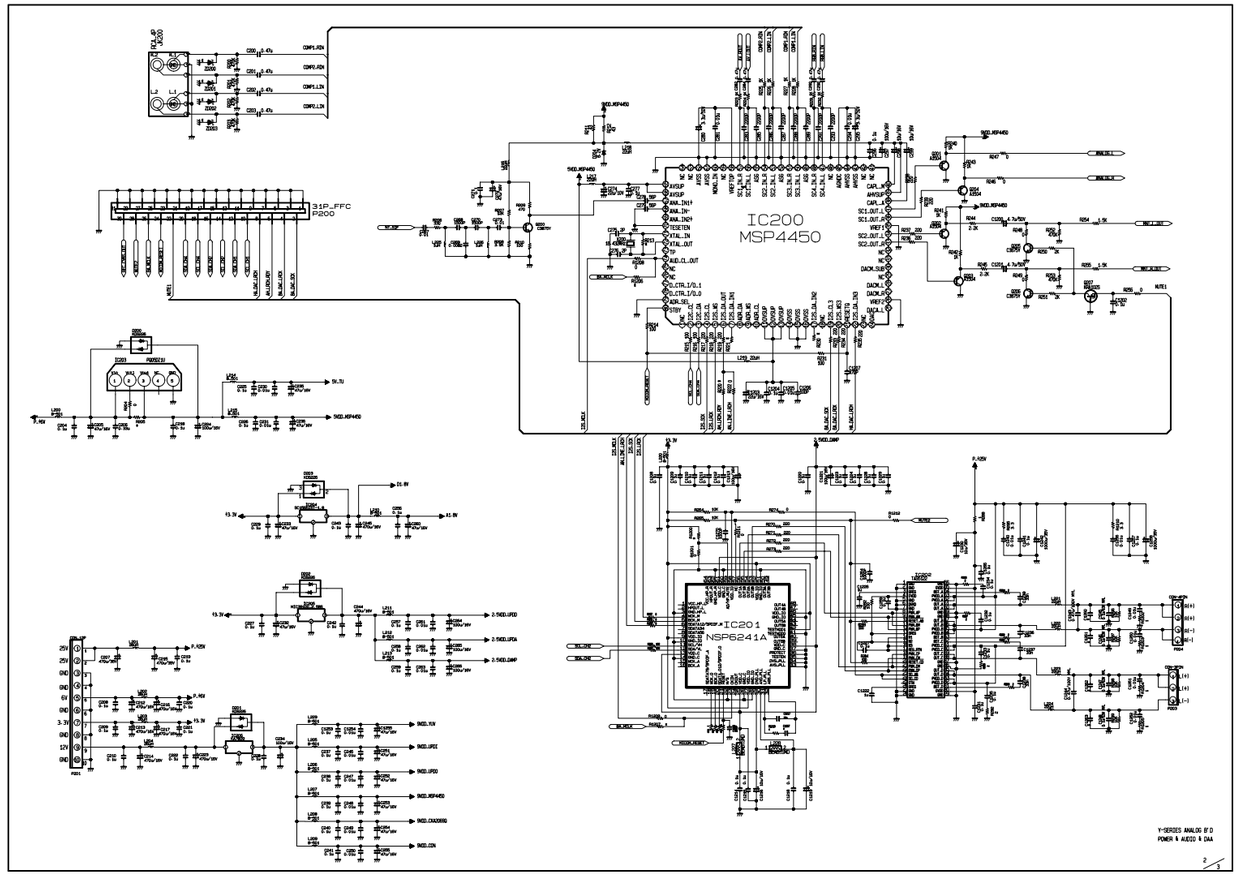
31P_FFC
P200
IC200
MSP4450
IC201
NSP6241A
Y-SERIES ANALOG B'D
POWER & AUDIO & DAA

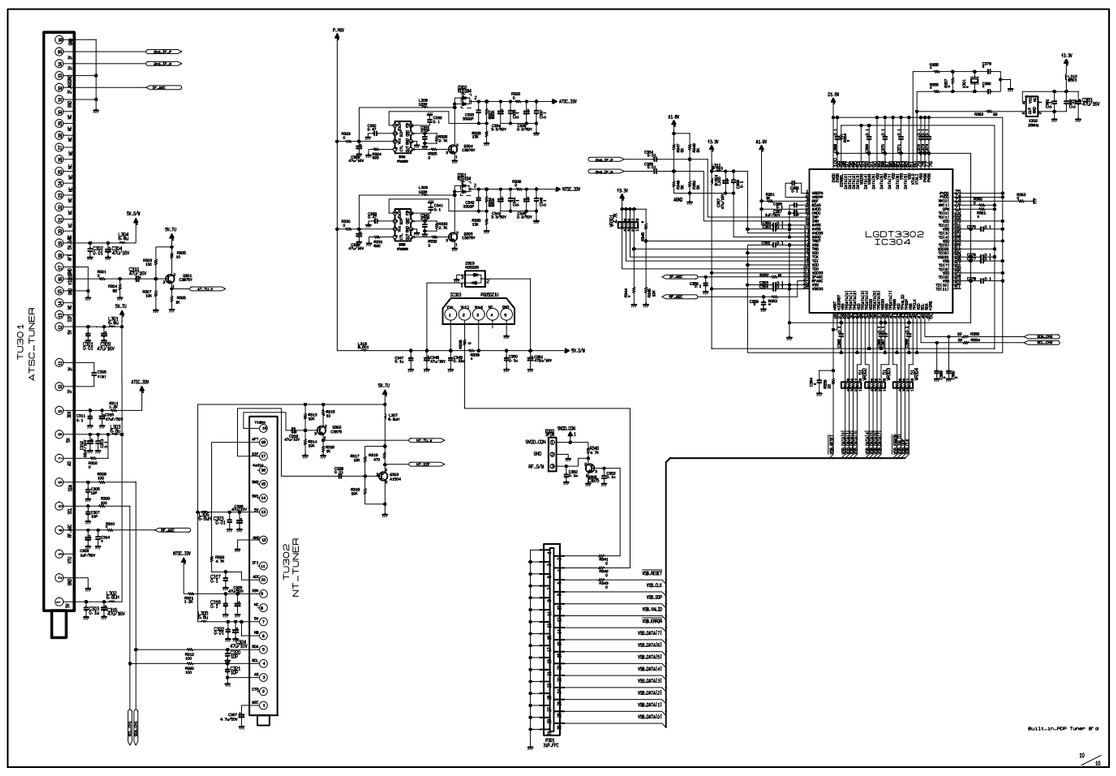
TU301
ATSC_TUNER
TU302
NT_TUNER
LGDT3302
IC304

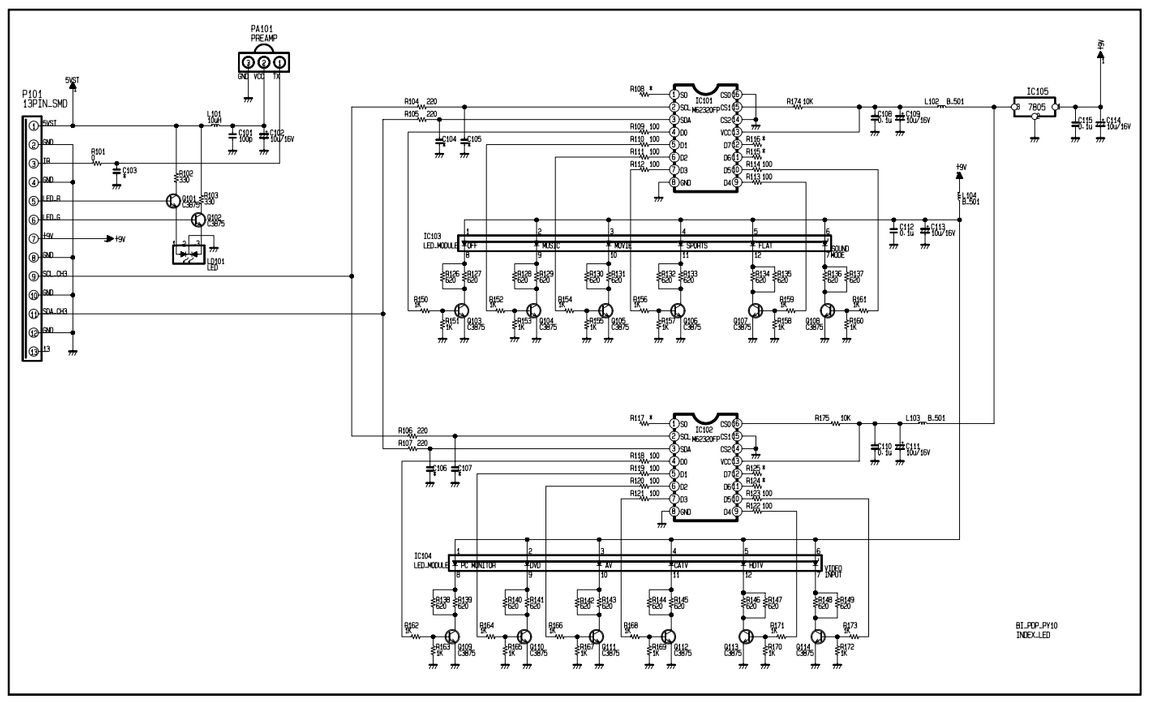
PA101
PREAMP
P101
13PIN_SMD
IC101
IC102
IC103
IC104
IC105
7805
BI_POP_PY10
INDEX_LED

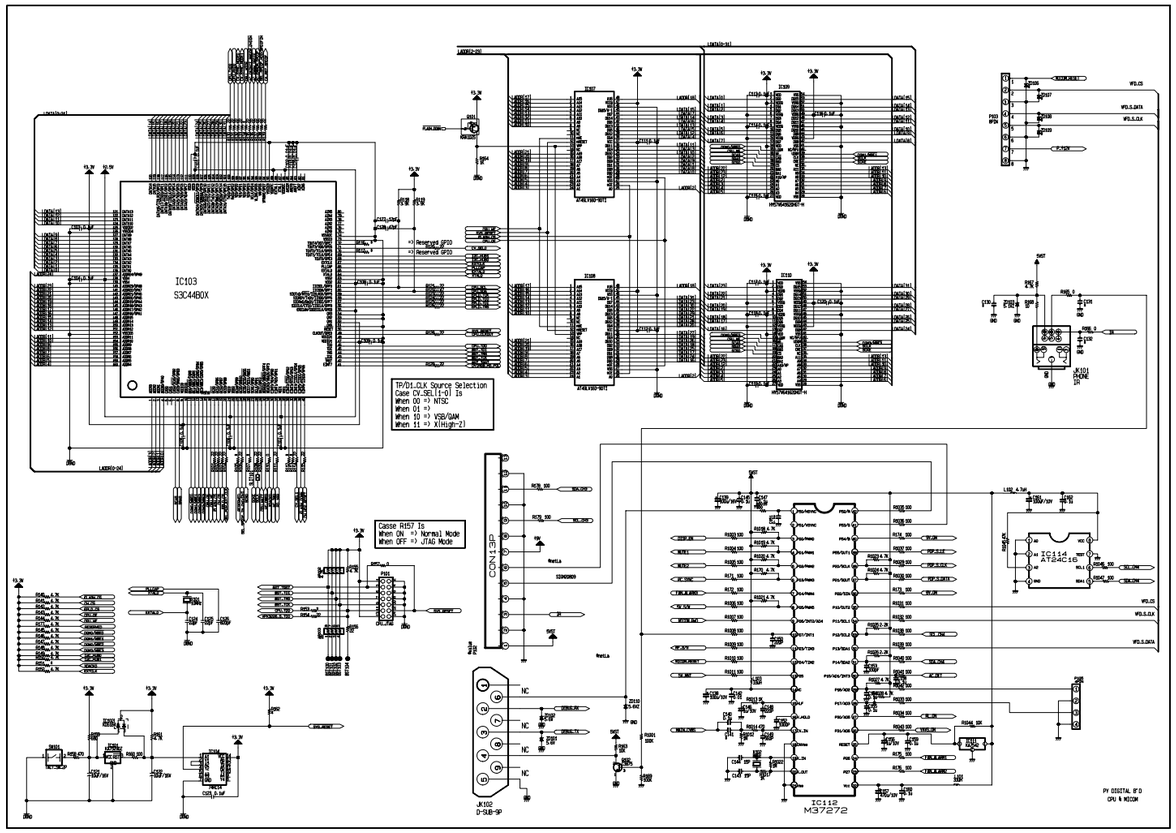
IC103
S3C44B0X
TP/D1.CLK Source Selection
Case CV.SEL[1-0] Is
When 00 => NTSC
When 01 =>
When 10 => VSB/QAM
When 11 => X(High-Z)
Case R157 Is
When ON => Normal Mode
When OFF => JTAG Mode
CON13P
IC114
AT24C16
IC112
M37272
JK102
D-SUB-9P
PY DIGITAL B'D
CPU & MICOM

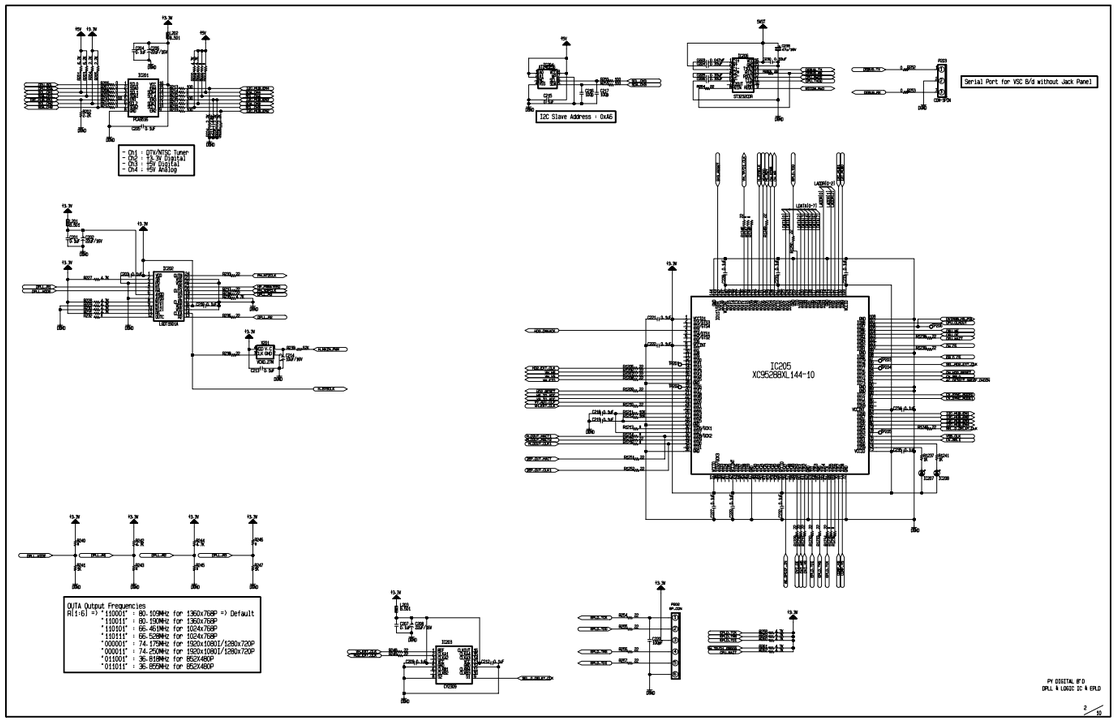
Serial Port for VSC B/d without Jack Panel
I2C Slave Address : 0xA6
IC205
XC95288XL144-10
QUTA Output Frequencies
R[1:6] => "110001" : 80.109MHz for 1360x768P => Default
"110011" : 80.190MHz for 1360x768P
"110101" : 66.461MHz for 1024x768P
"110111" : 65.528MHz for 1024x768P
"000001" : 74.175MHz for 1920x1080I/1280x720P
"000011" : 74.250MHz for 1920x1080I/1280x720P
"011001" : 36.818MHz for 852X480P
"011011" : 36.859MHz for 852X480P
PY DIGITAL B'D
EPLL & LOGIC IC & EPLD

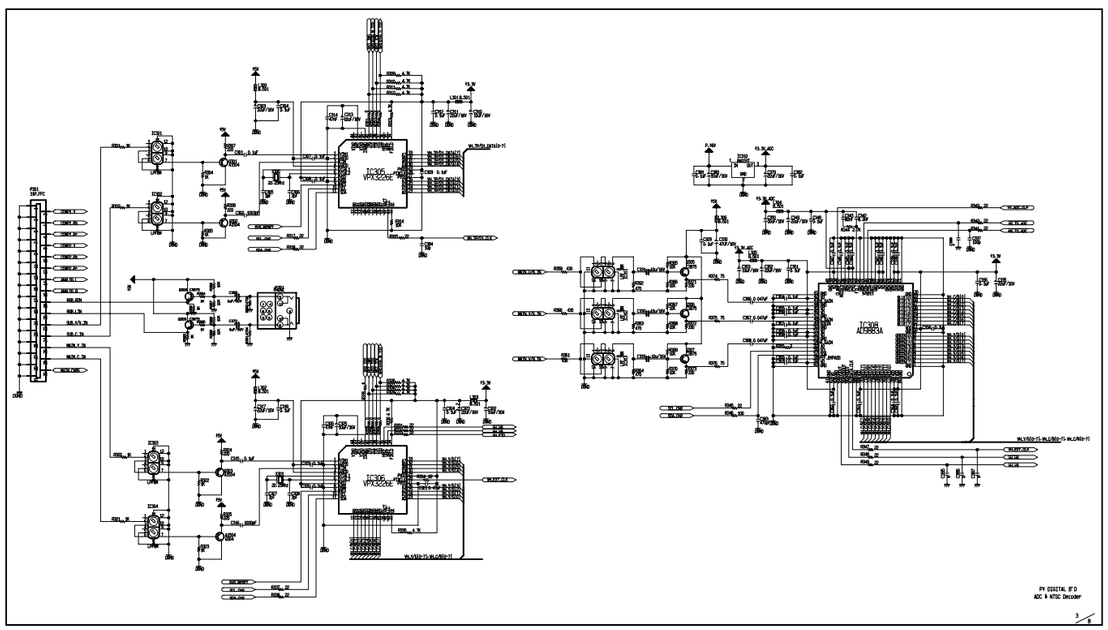
IC305
VPX3226E
IC308
AD9883A
PY DIGITAL B'D
ADC & NTSC Decoder

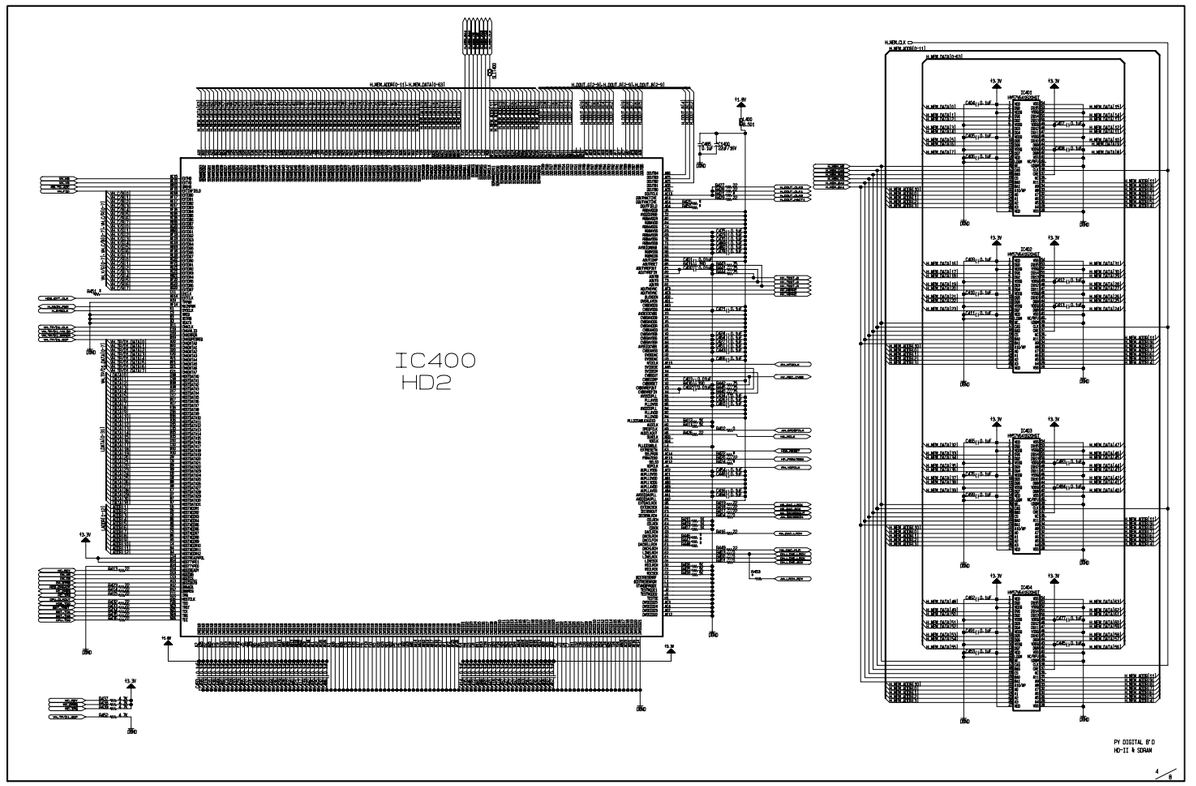
IC400
HD2
PY DIGITAL B'D
HD-II & SDRAM

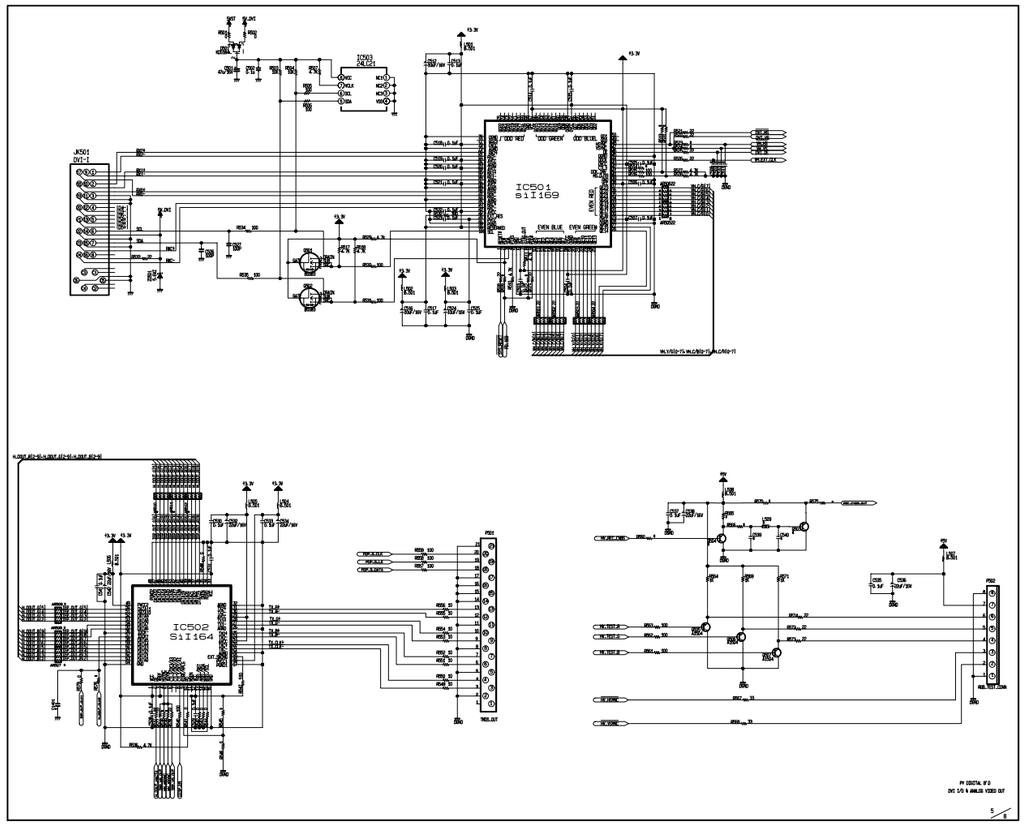

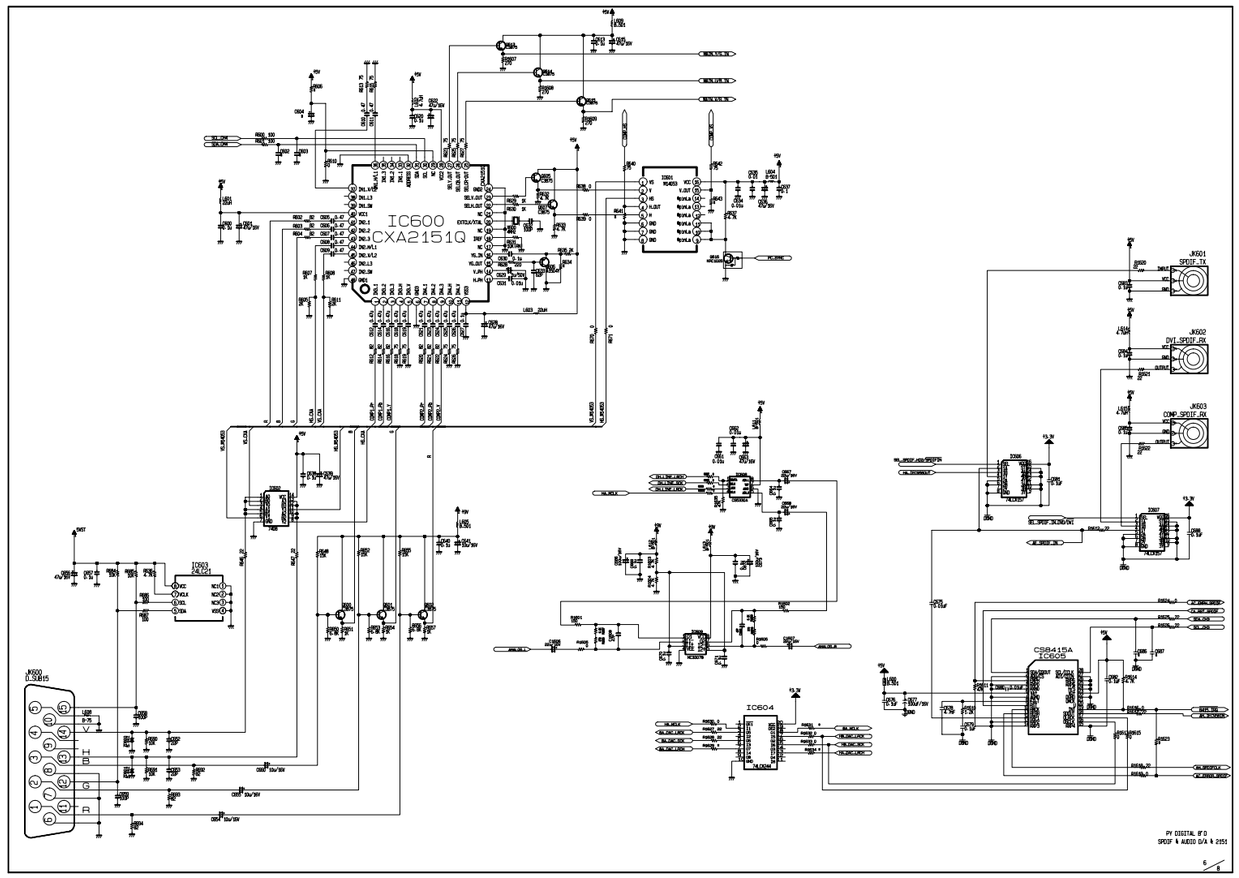

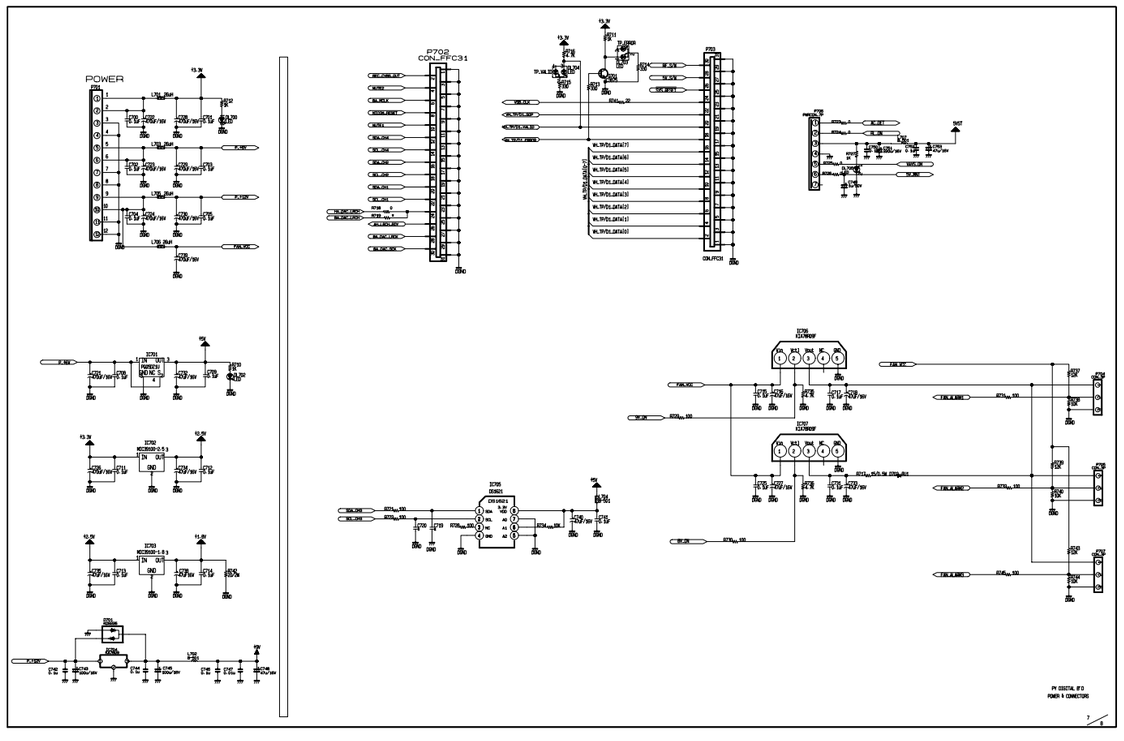

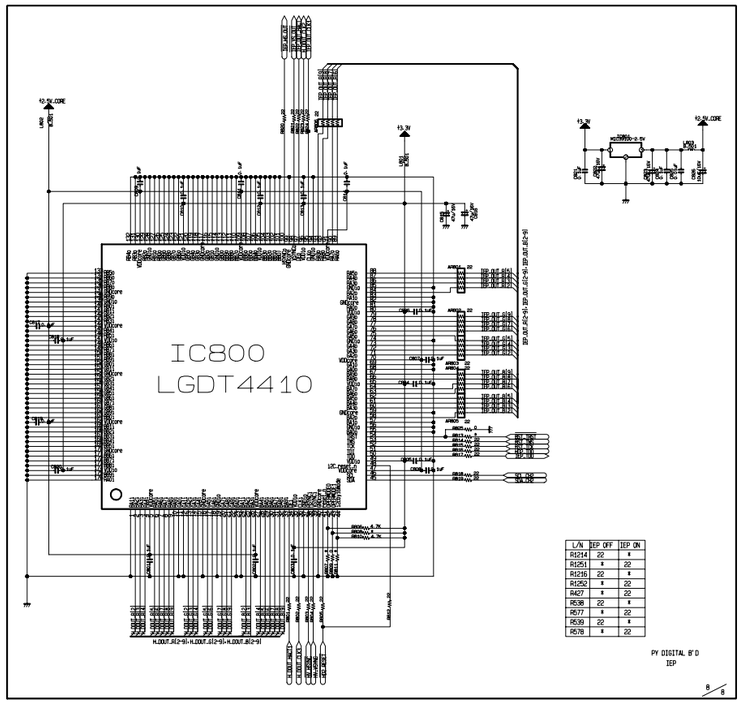

L/N	IEP OFF	IEP ON
R1214	22	*
R1251	*	22
R1216	22	*
R1252	*	22
R427	*	22
R538	22	*
R577	*	22
R539	22	*
R578	*	22

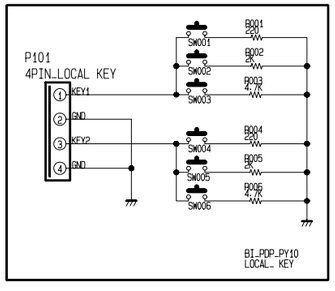

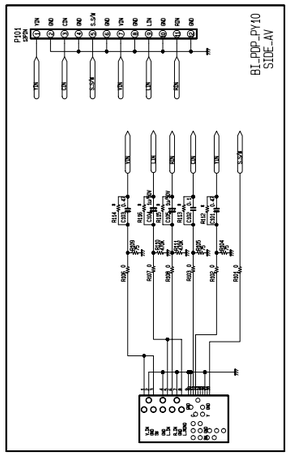

DIGITAL(TOP)

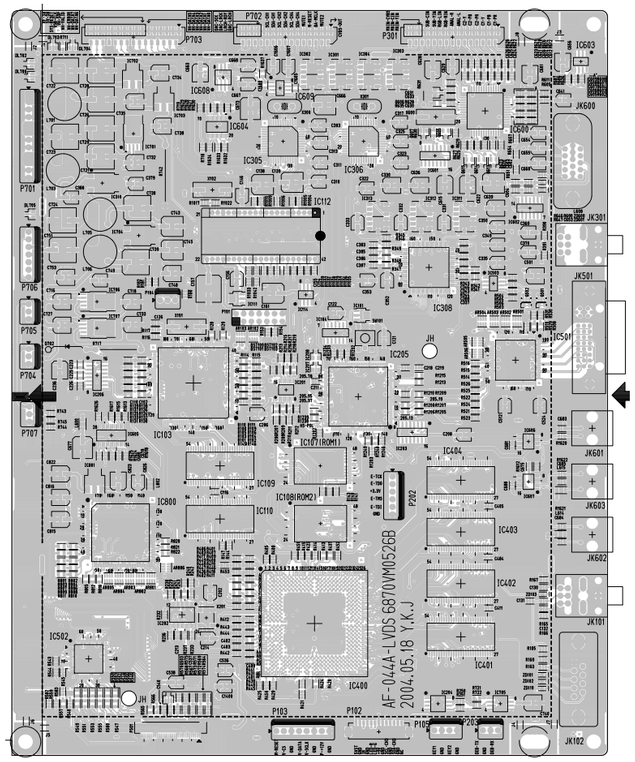

DIGITAL(BOTTOM)

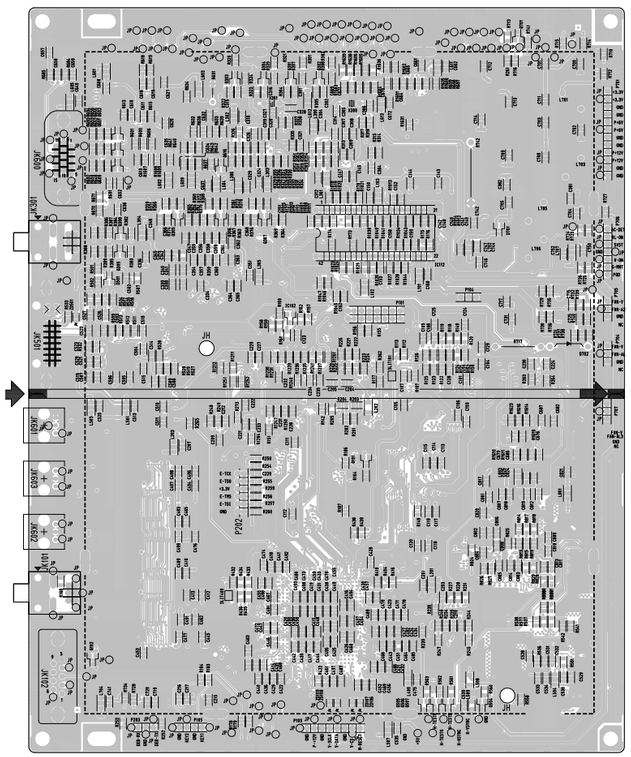

SIDE A/V(TOP)

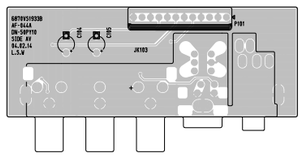

SIDE A/V(BOTTOM)

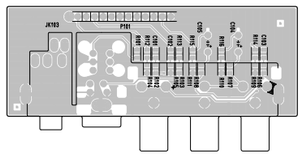

POWER(TOP)

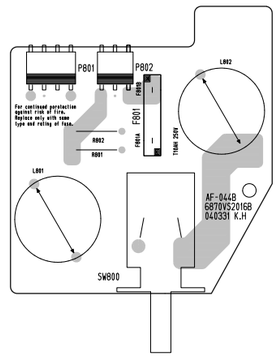

POWER(BOTTOM)

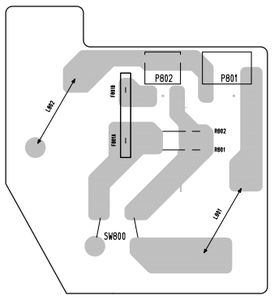

ANALOG(TOP)

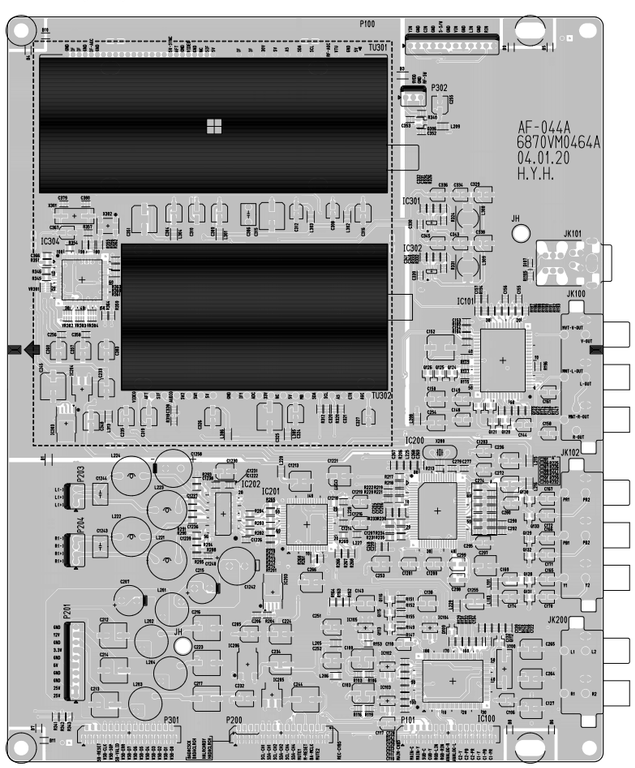

ANALOG(BOTTOM)

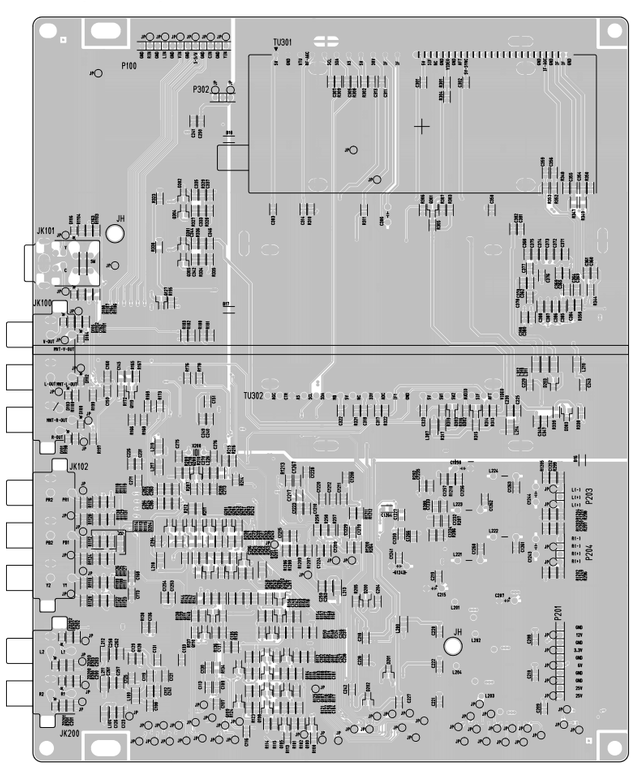

CONTROL(TOP)

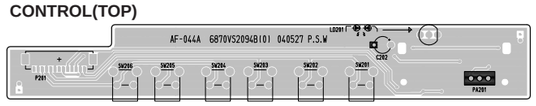

CONTROL(BOTTOM)