7. Schematic Diagrams

7-1 S.M.P.S. - 7-2

7-2 Main Connector - 7-3

7-3 DDR - 7-4

7-4 IEEE 1394 - 7-5

7-5 Video Decoder - 7-6

7-6 A/V Codec - 7-7

7-7 Audio In/Out - 7-8

7-8 FLASH & SRAM - 7-9

7-9 A/V Output - 7-10

7-10 A/V Input - 7-11

7-11 Front Micom - 7-12

7-12 TM Block & MTS - 7-13

7-13 SCART - 7-14

7-14 Fuction Key - 7-15

7-15 Fuction Key (DVD-R100EA Only) - 7-16

7-1 S.M.P.S.

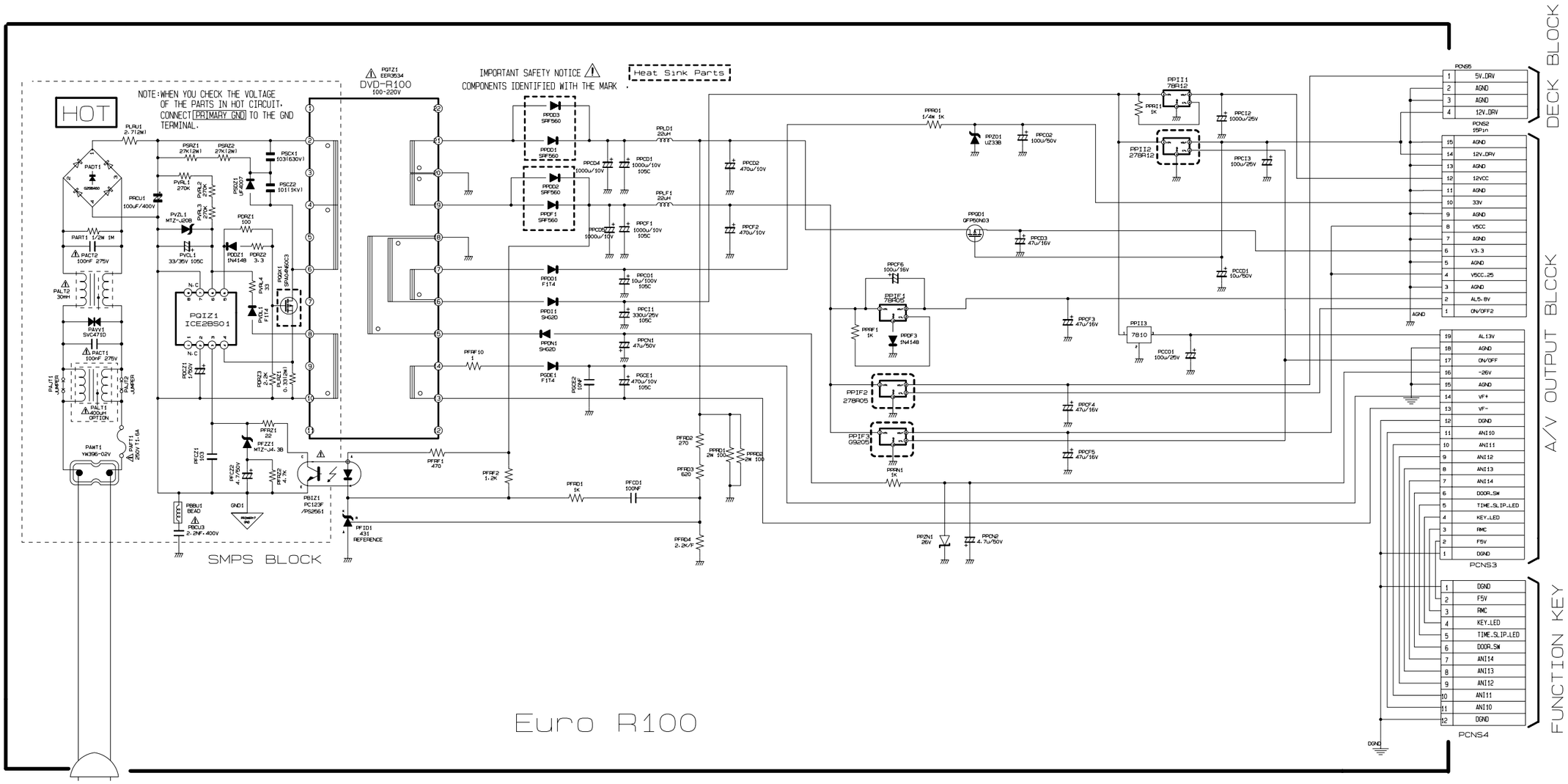

This Document can not be used without Samsung's authorization.

7-2 Main Connector

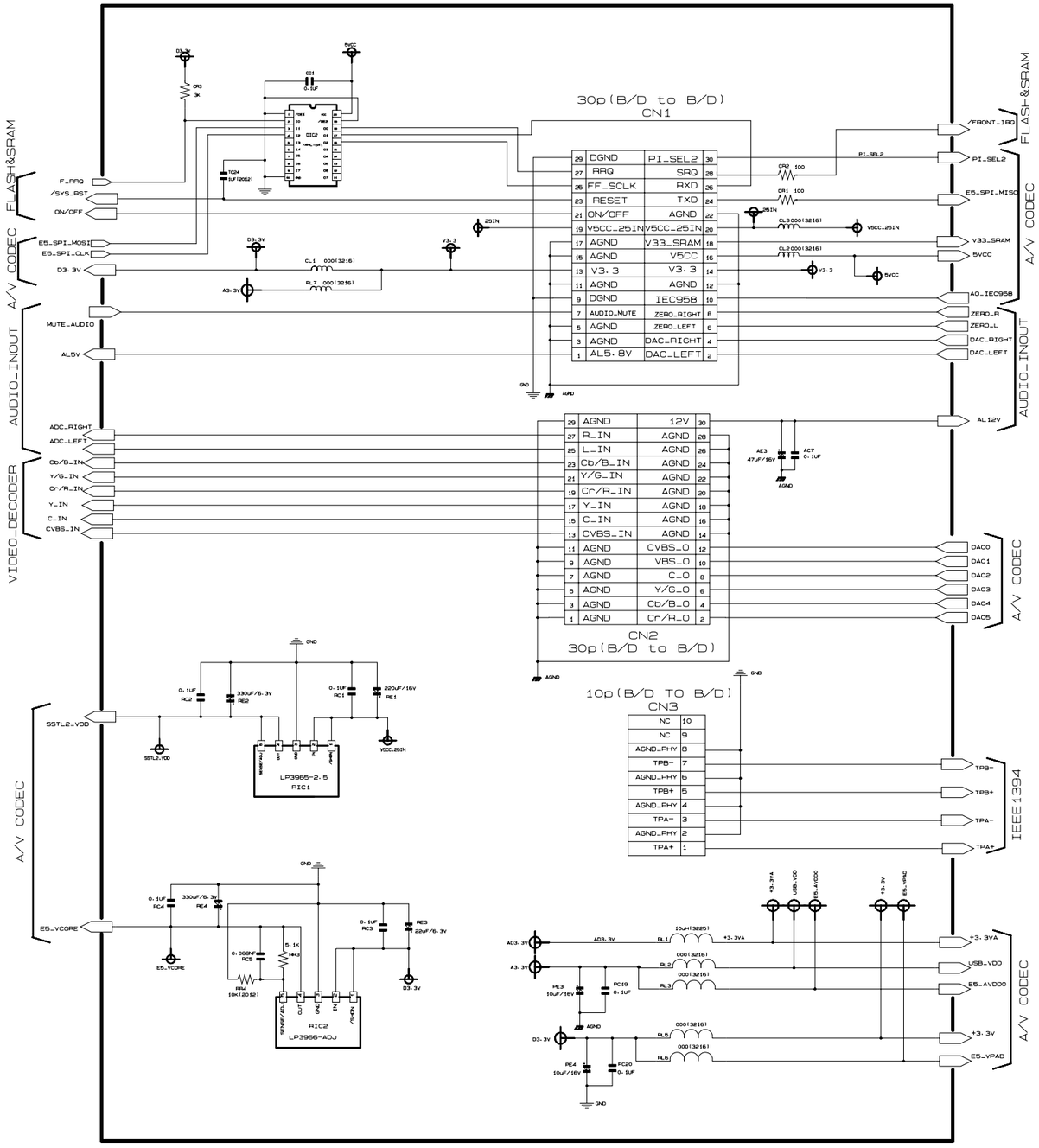

This Document can not be used without Samsung's authorization.

7-3 DDR

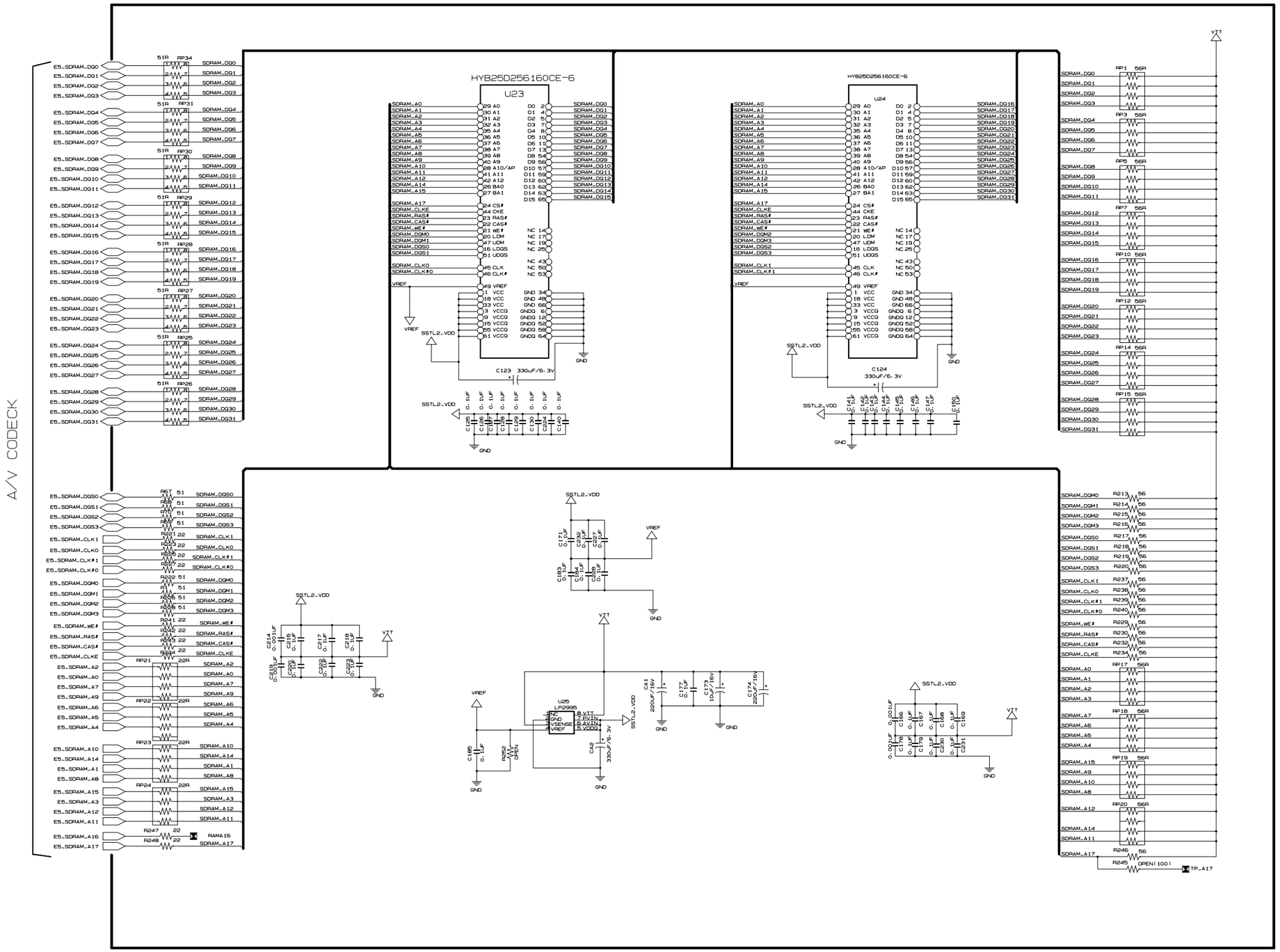

This Document can not be used without Samsung's authorization.

7-4 IEEE 1394

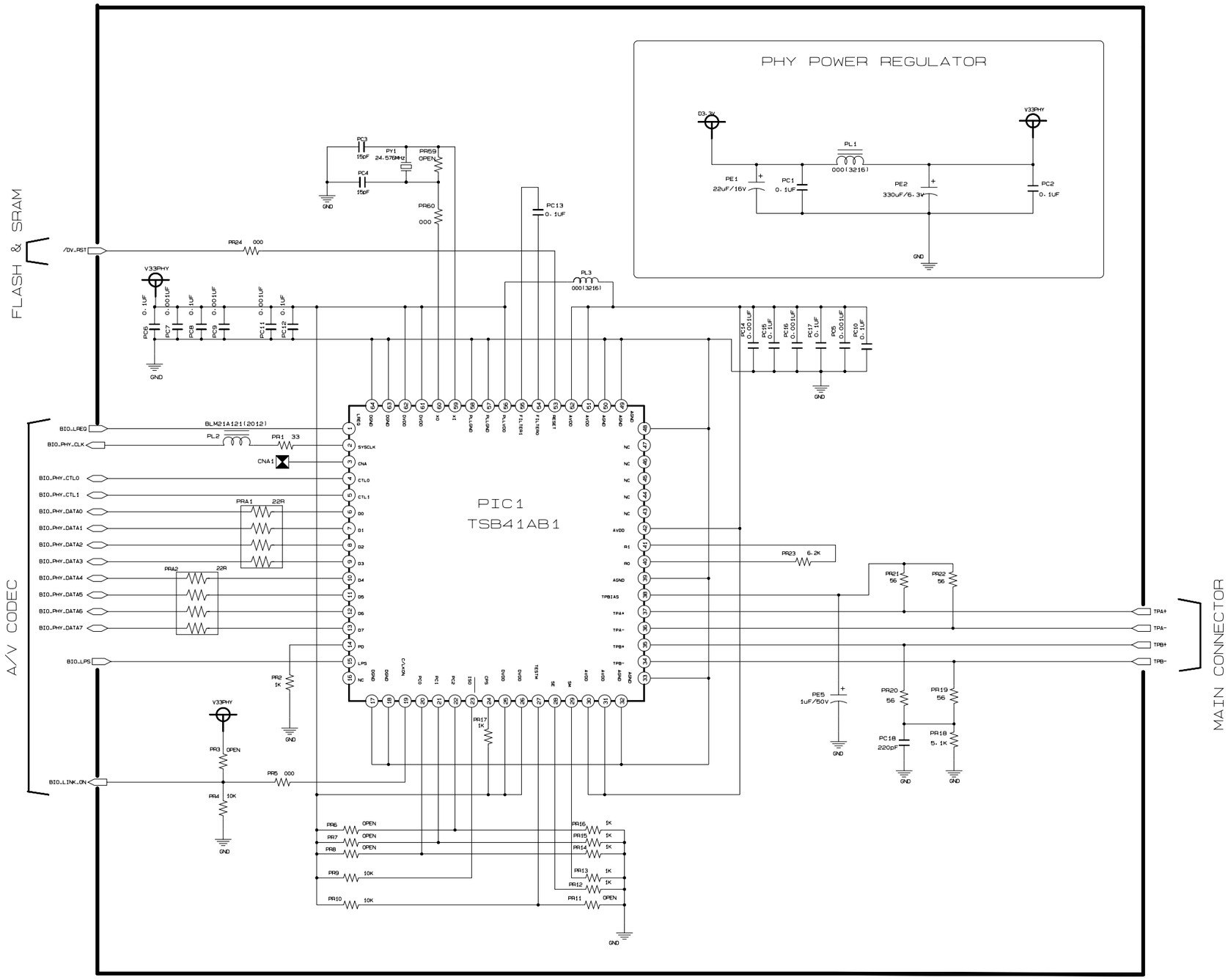

This Document can not be used without Samsung's authorization.

7-5 Video Decoder

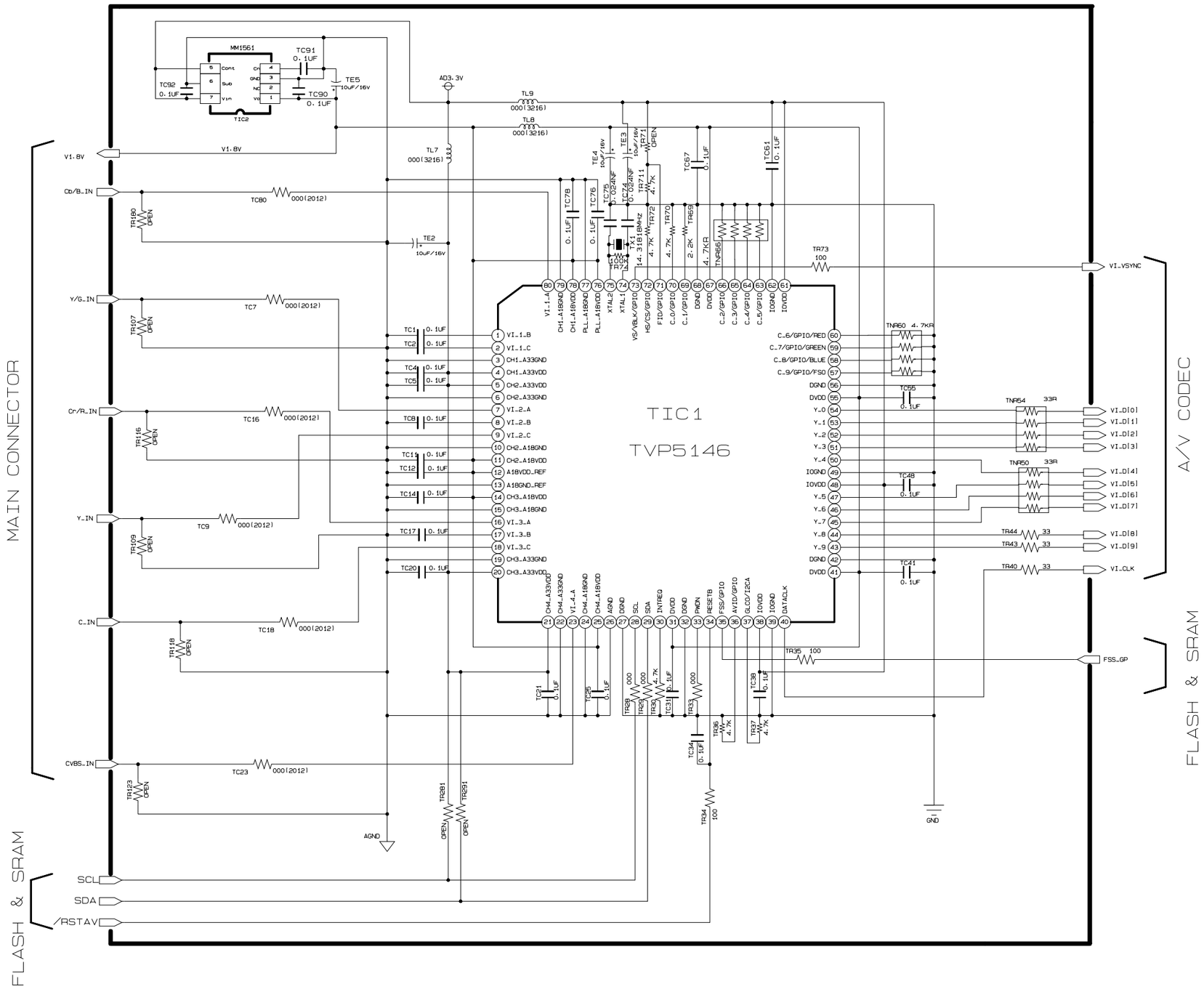

This Document can not be used without Samsung's authorization.

7-6 A/V Codec

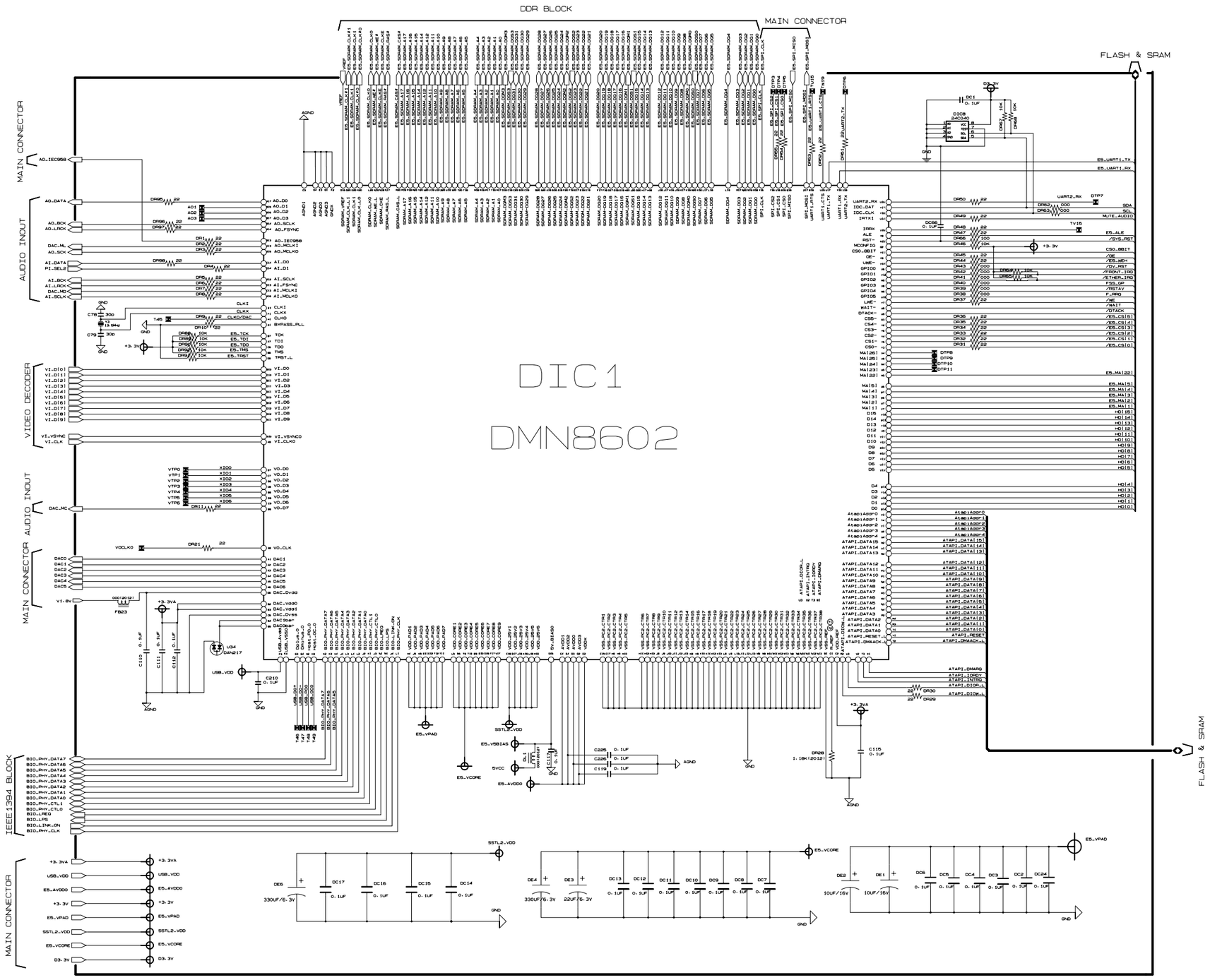
DDR BLOCK
MAIN CONNECTOR
FLASH & SRAM
MAIN CONNECTOR
AUDIO INOUT
VIDEO DECODER
MAIN CONNECTOR AUDIO INOUT
IEEE1394 BLOCK
MAIN CONNECTOR
DIC1
DMN8602

7-7 Audio In/Out

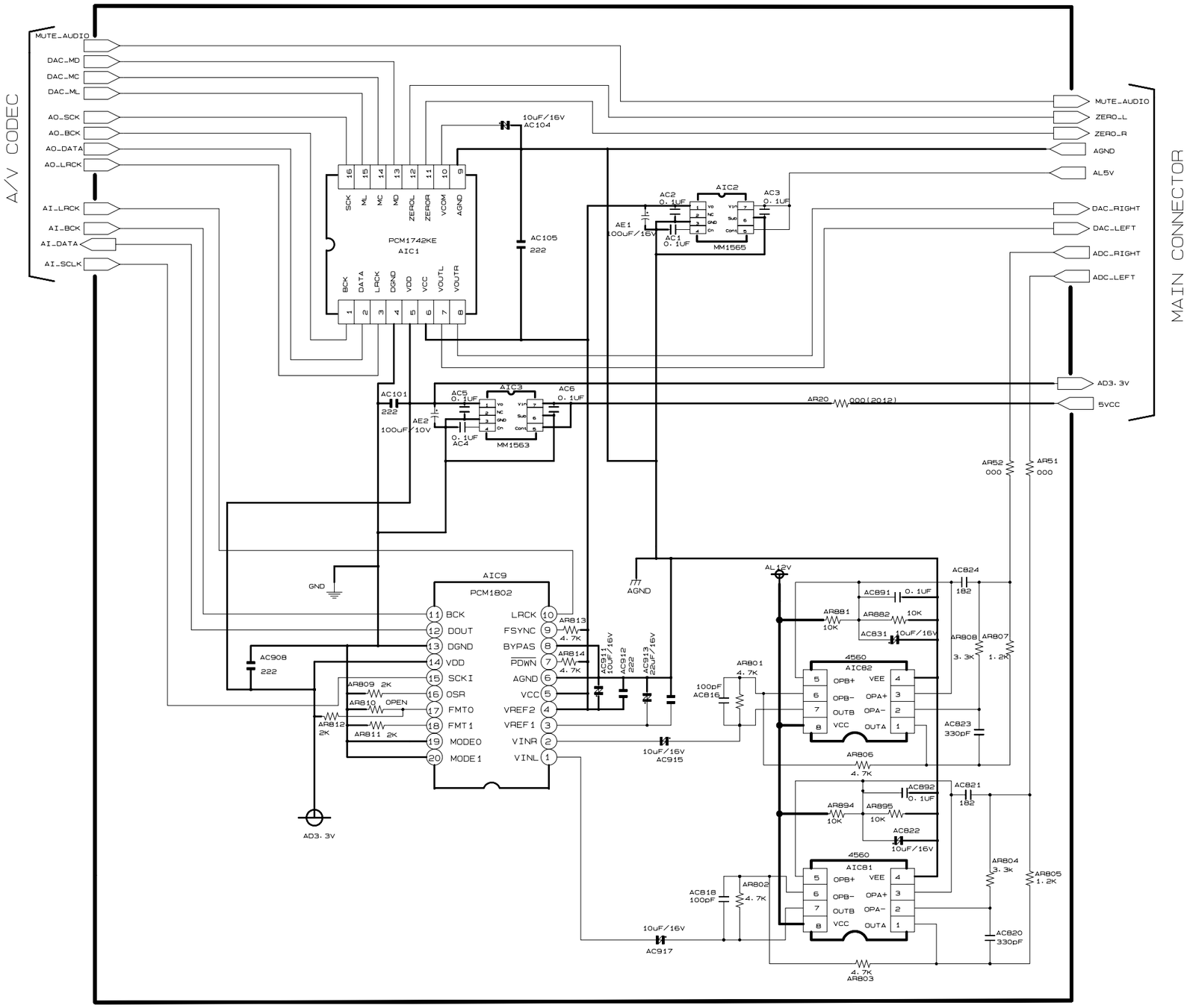

This Document can not be used without Samsung's authorization.

7-8 FLASH & SRAM

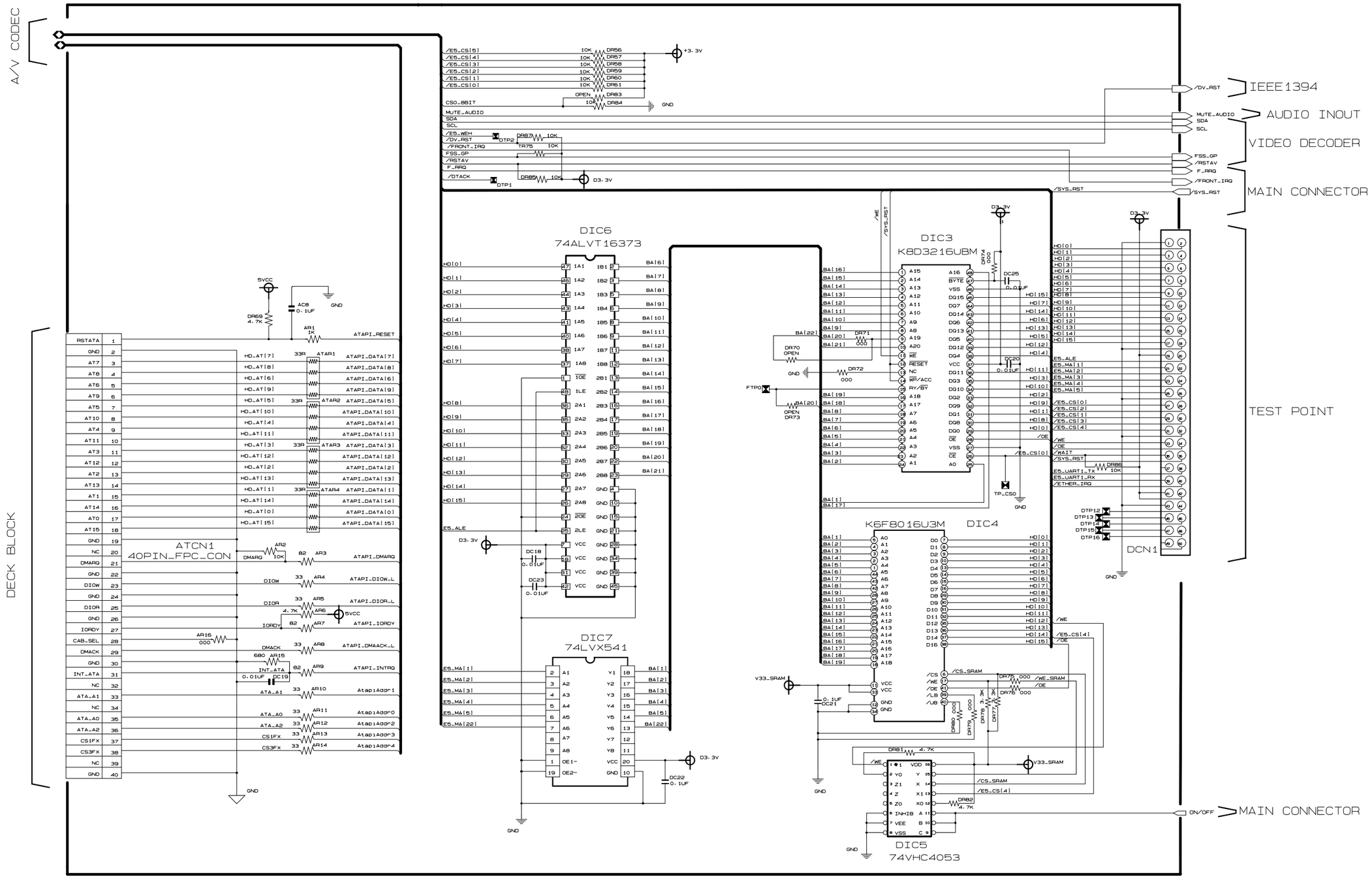

This Document can not be used without Samsung's authorization.

7-9 A/V Output

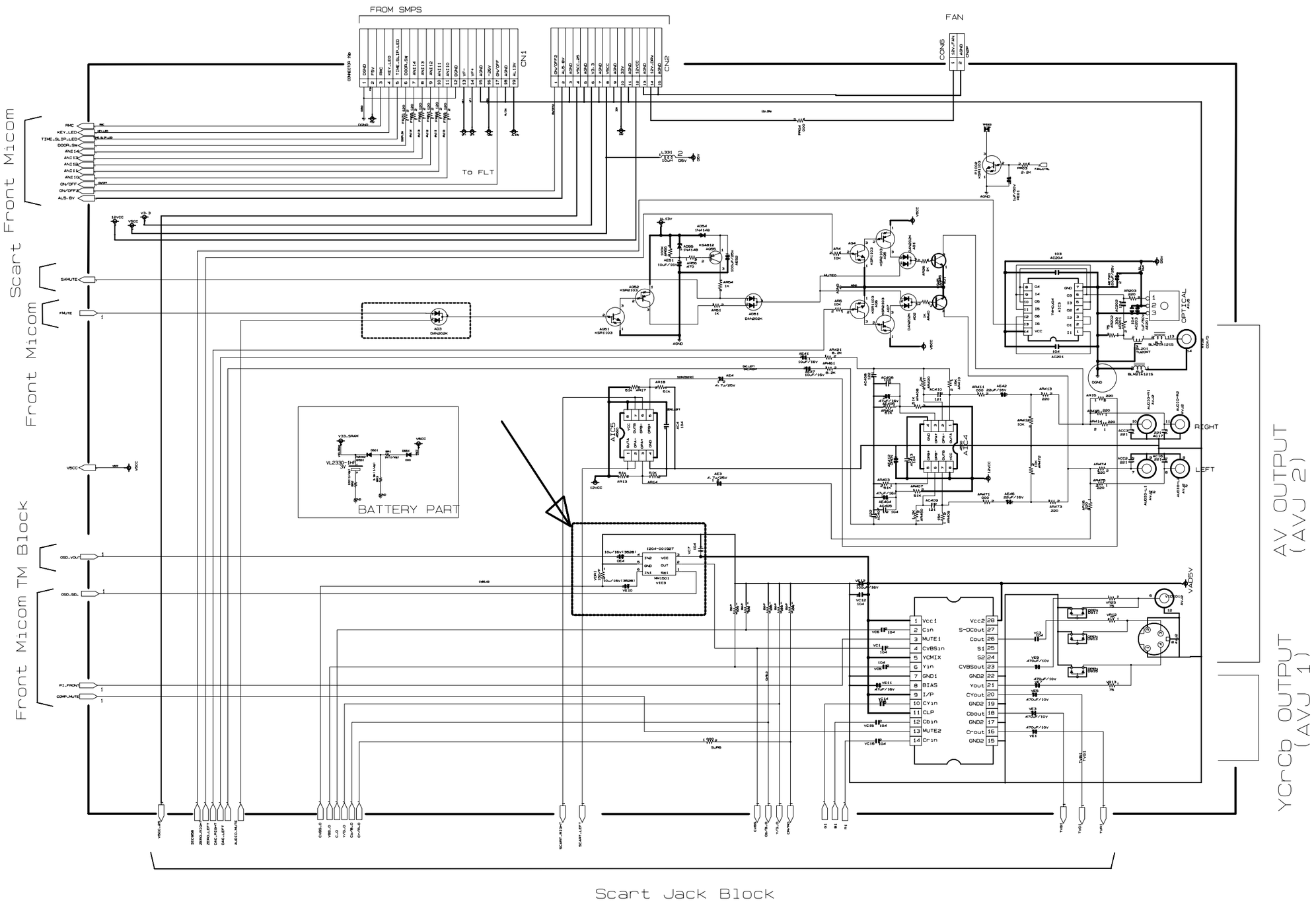

This Document can not be used without Samsung's authorization.

7-10 A/V Input

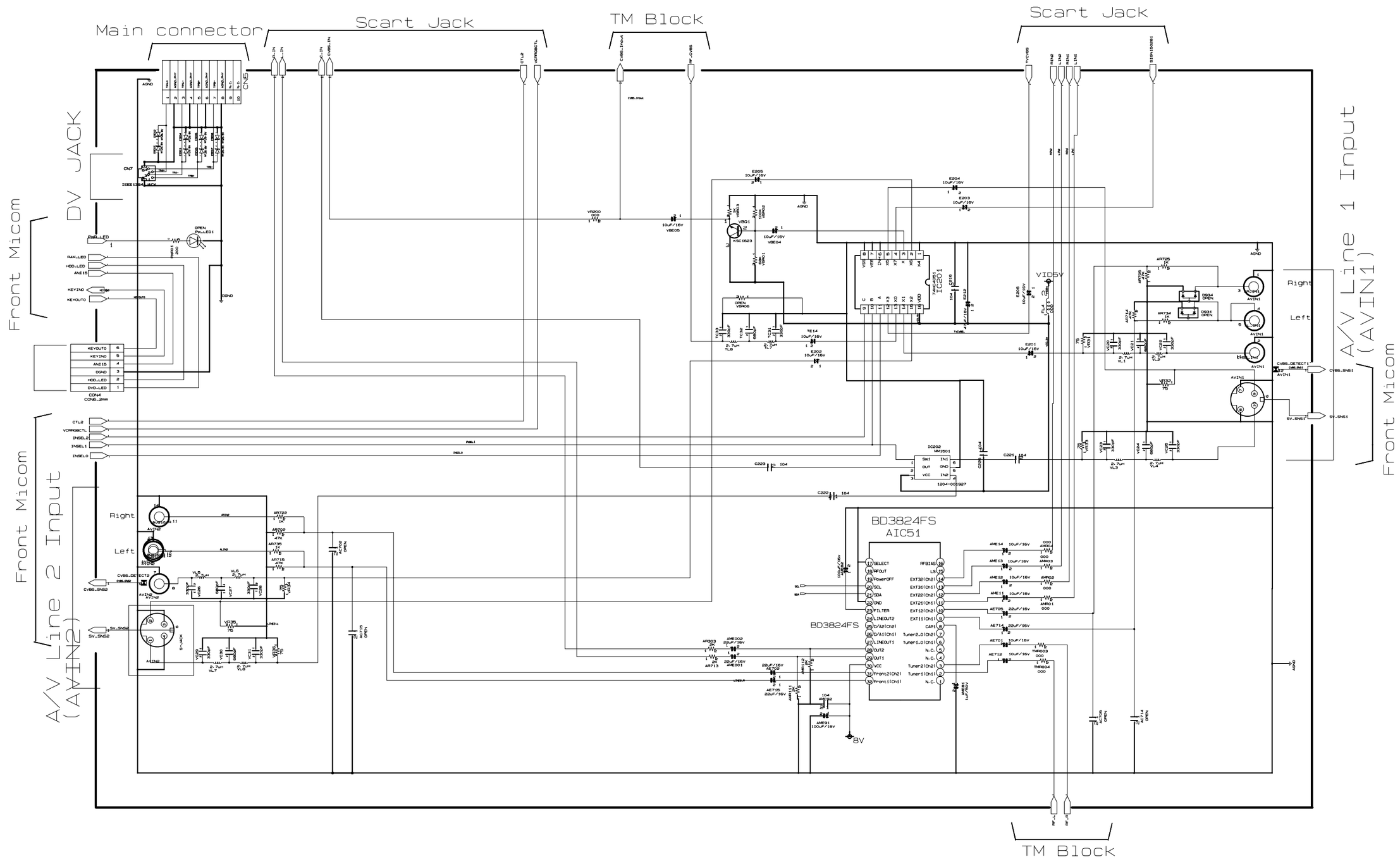

This Document can not be used without Samsung's authorization.

7-11 Front Micom

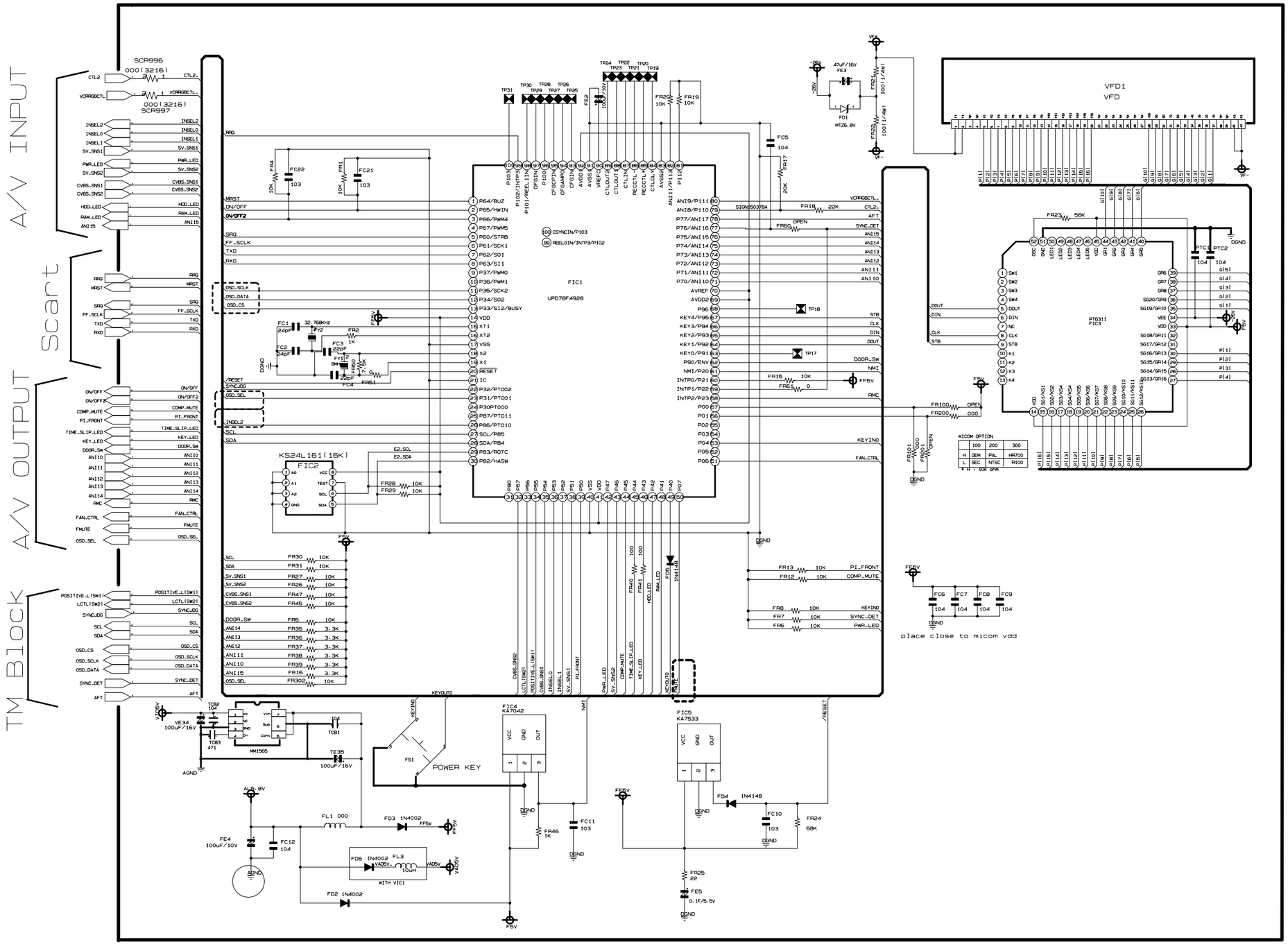

This Document can not be used without Samsung's authorization.

7-12 TM Block & MTS

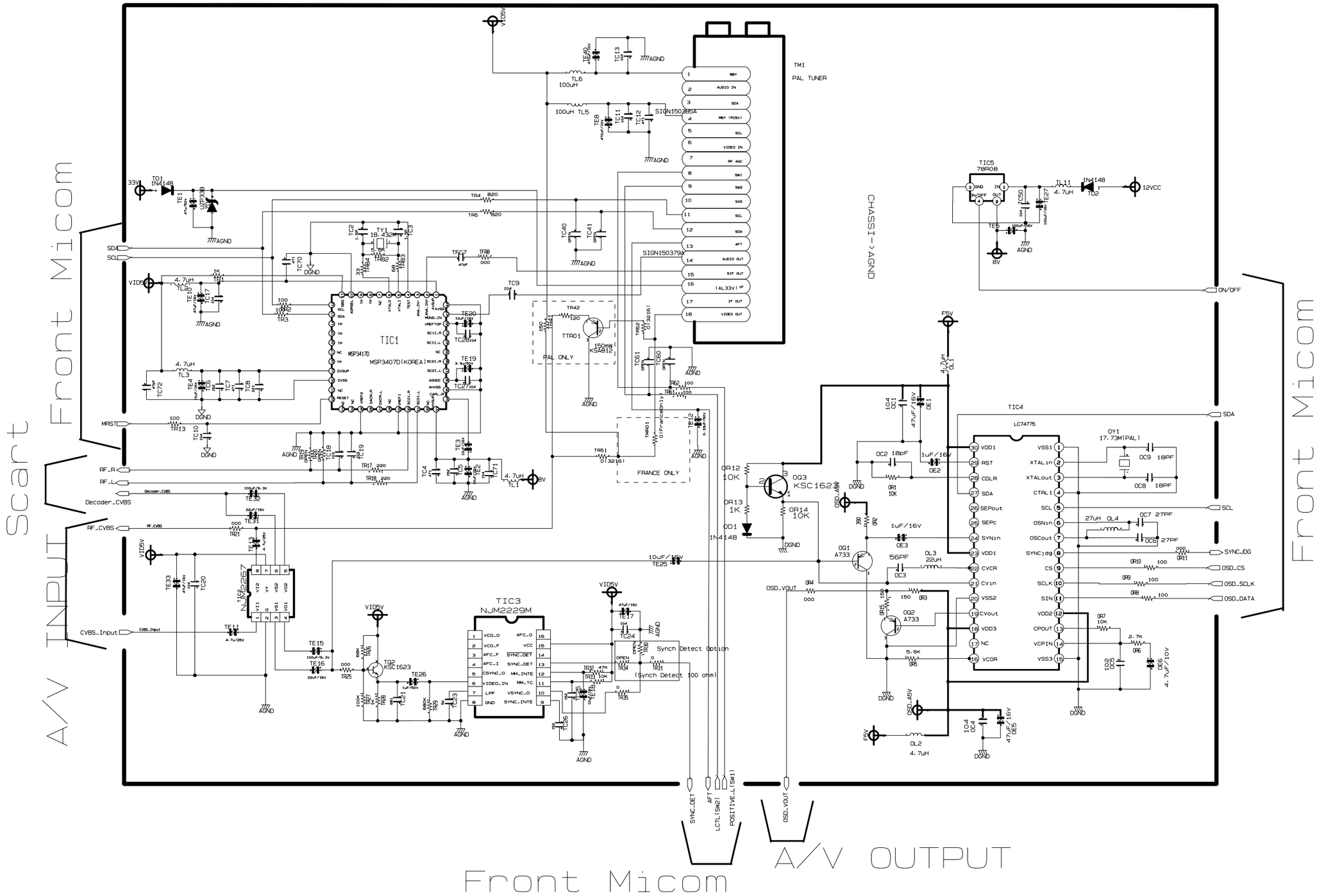

This Document can not be used without Samsung's authorization.

7-13 SCART

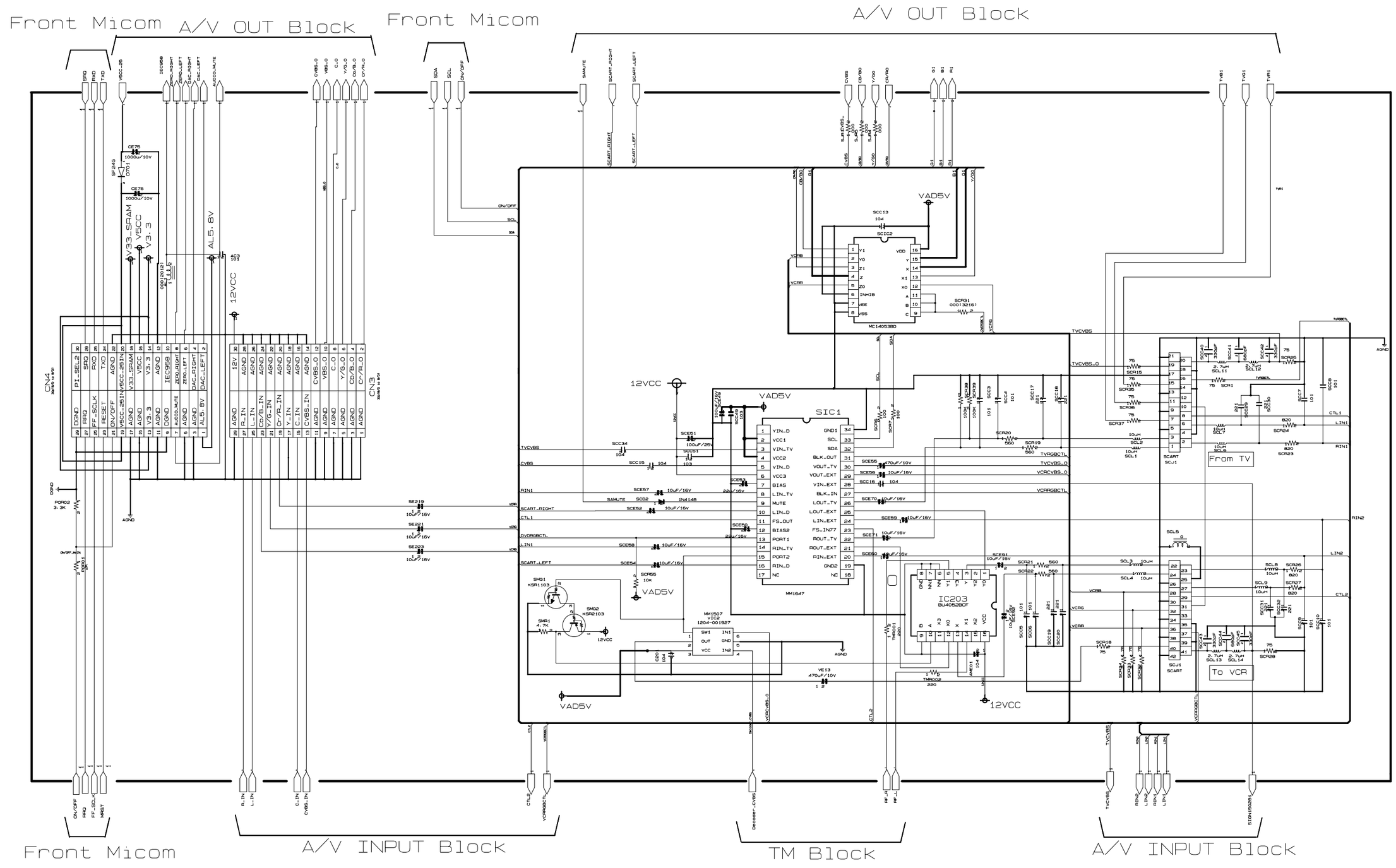

This Document can not be used without Samsung's authorization.

7-14 Fuction Key

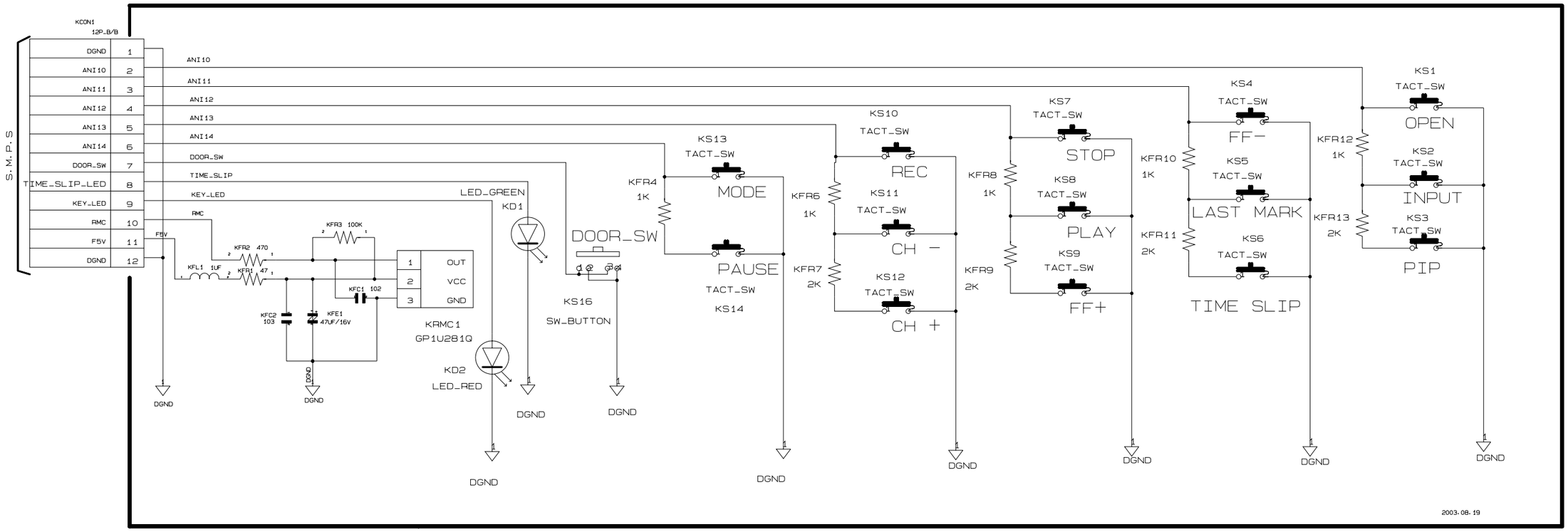

7-15 Fuction Key (DVD-R100EA Only)

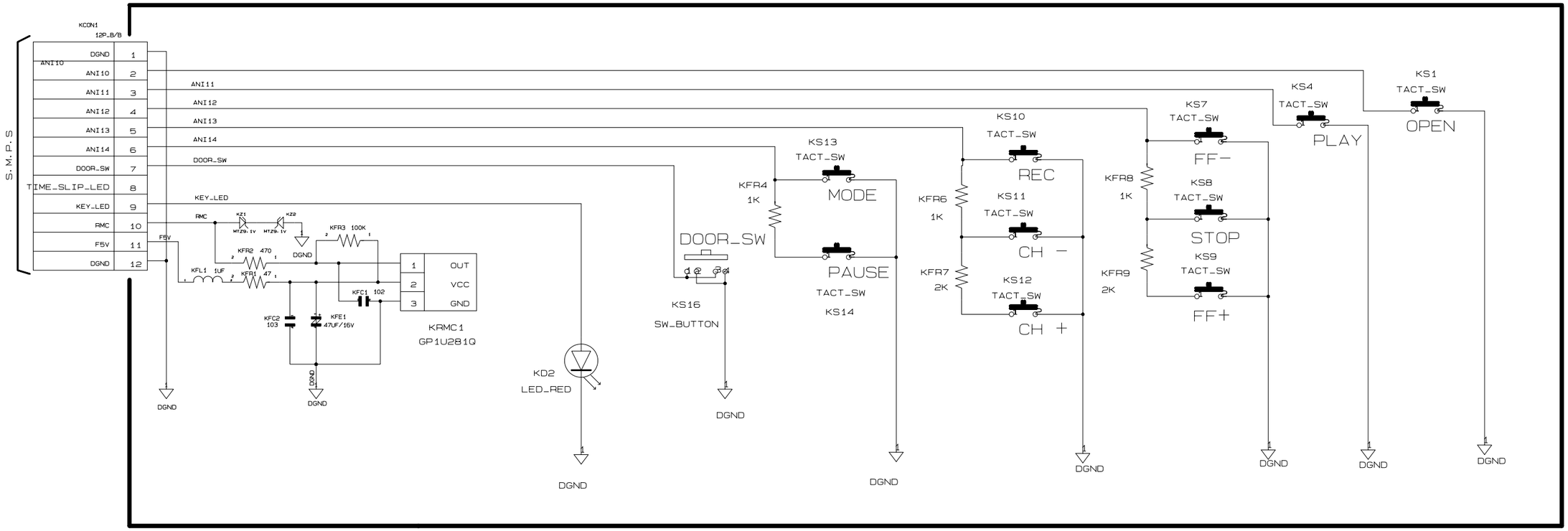

This Document can not be used without Samsung's authorization.