THOMSON

Service Manual

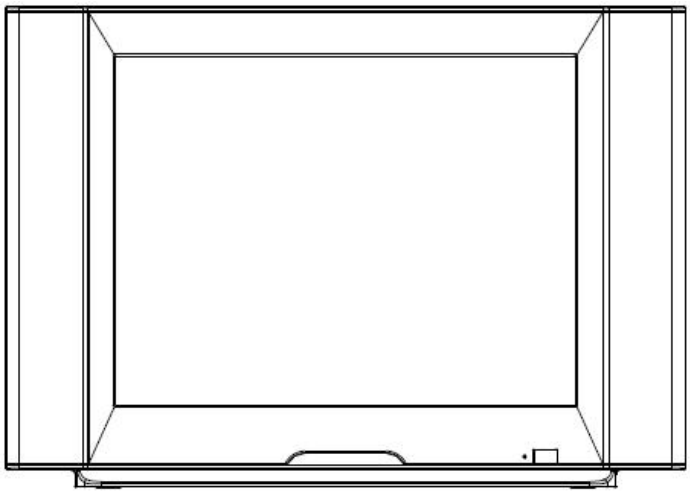

29DMV88KH

1. Caution ····· 2
2. Specifications of chassis ····· 6
3. Alignment Procedure ····· 13
4. Schematic Diagram ····· 20
5. PCB Layout ····· 24
6. BOM List ····· 25

This manual is the latest at the time of printing, and does not include the modification which may be made after the printing, by the constant improvement of product.

1 **CAUTION:**
Use of controls, adjustments or procedures other than those specified herein may result in hazardous radiation exposure.

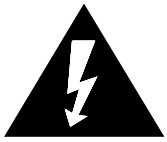

CAUTION: TO REDUCE THE RISK OF ELECTRICAL SHOCK, DO NOT REMOVE COVER (OR BACK). NO USER SERVICEABLE PARTS INSIDE. REFER SERVICING TO QUALIFIED SERVICE PERSONNEL.

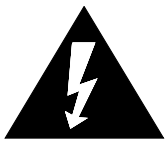

The lighting flash with arrowhead symbol, with an equilateral triangle is intended to alert the user to the presence of uninsulated "dangerous voltage" within the product's enclosure that may be of sufficient magnitude to constitute a risk of electric shock to the person.

The exclamation point within an equilateral triangle is intended to alert the user to the presence of important operating and maintenance (servicing) instructions in the literature accompanying the appliance.

WARNING: TO REDUCE RISK OF FIRE OR ELECTRIC SHOCK, DO NOT EXPOSE THIS APPLIANCE TO RAIN OR MOISTURE.

IMPORTANT SAFETY INSTRUCTIONS

CAUTION:

Read all of these instructions. Save these instructions for later use. Follow all Warnings and Instructions marked on the audio equipment.

1. Read Instructions- All the safety and operating instructions should be read before the product is operated.
2. Retain Instructions- The safety and operating instructions should be retained for future reference.
3. Heed Warnings- All warnings on the product and in the operating instructions should be adhered to.
4. Follow Instructions- All operating and use instructions should be followed.

FOR YOUR PERSONAL SAFETY

1. When the power cord or plug is damaged or frayed, unplug this television set from the wall outlet and refer servicing to qualified service personnel.

2. Do not overload wall outlets and extension cords as this can result in fire or electric shock.

3. Do not allow anything to rest on or roll over the power cord, and do not place the TV where power cord is subject to traffic or abuse. This may result in a shock or fire hazard.

4. Do not attempt to service this television set yourself as opening or removing covers may expose you to dangerous voltage or other hazards. Refer all servicing to qualified service personnel.

5. Never push objects of any kind into this television set through cabinet slots as they may touch dangerous voltage points or short out parts that could result in a fire or electric shock. Never spill liquid of any kind on the television set.

6. If the television set has been dropped or the cabinet has been damaged, unplug this television set from the wall outlet and refer servicing to qualified service personnel.

7. If liquid has been spilled into the television set, unplug this television set from the wall outlet and refer servicing to qualified service personnel.

8. Do not subject your television set to impact of any kind. Be particularly careful not to damage the picture tube surface.

9. Unplug this television set from the wall outlet before cleaning. Do not use liquid cleaners or aerosol cleaners. Use a damp cloth for cleaning.

10.1. Do not place this television set on an unstable cart, stand, or table. The television set may fall, causing serious injury to a child or an adult, and serious damage to the appliance. Use only with a cart or stand recommended by the manufacturer, or sold with the television set. Wall or shelf mounting should follow the manufacturer's instructions, and should use a mounting kit approved by the manufacturer.

10.2. An appliance and cart combination should be moved with care. Quick stops, excessive force, and uneven surfaces may cause the appliance and cart combination to overturn.

PROTECTION AND LOCATION OF YOUR SET

11. • Do not use this television set near water ... for example, near a bathtub, washbowl, kitchen sink, or laundry tub, in a wet basement, or near a swimming pool, etc.
    • Never expose the set to rain or water. If the set has been exposed to rain or water, unplug the set from the wall outlet and refer servicing to qualified service personnel.

12. Choose a place where light (artificial or sunlight) does not shine directly on the screen.

13. Avoid dusty places, since piling up of dust inside TV chassis may cause failure of the set when high humidity persists.

14. The set has slots, or openings in the cabinet for ventilation purposes, to provide reliable operation of the receiver, to protect it from overheating. These openings must not be blocked or covered.
    - Never cover the slots or openings with cloth or other material.
    - Never block the bottom ventilation slots of the set by placing it on a bed, sofa, rug, etc.
    - Never place the set near or over a radiator or heat register.
    - Never place the set in a "built-in" enclosure, unless proper ventilation is provided.

PROTECTION AND LOCATION OF YOUR SET

15.1. If an outside antenna is connected to the television set, be sure the antenna system is grounded so as to provide some protection against voltage surges and built up static charges, Section 810 of the National Electrical Code, NFPA No. 70-1975, provides information with respect to proper grounding of the mast and supporting structure, grounding of the lead-in wire to an antenna discharge unit, size of grounding conductors, location of antenna discharge unit, connection to grounding electrode, and requirements for the grounding electrode.

EXAMPLE OF ANTENNA GROUNDING AS PER NATIONAL ELECTRICAL CODE INSTRUCTIONS

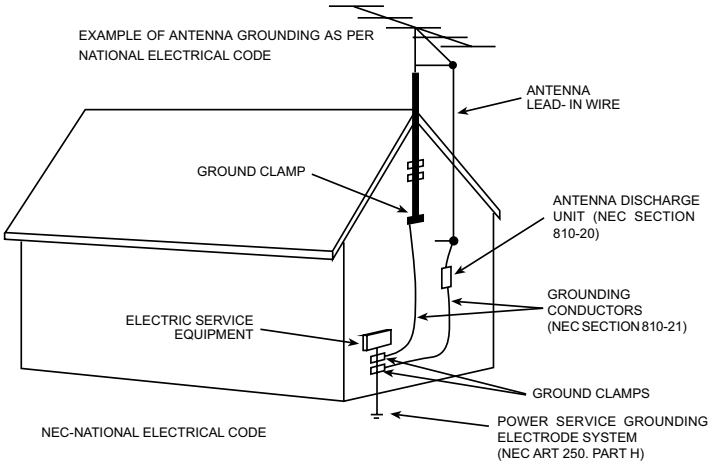

15.2. Note to CATV system installer : (Only for the television set with CATV reception)

This reminder is provided to call the CATV system installer's attention to Article 820-40 of the NEC that provides guidelines for proper grounding and, in particular, specifies that the cable ground shall be connected to the grounding system of the building, as close to the point of cable entry as practical.

16. An outside antenna system should not be located in the vicinity of overhead power lines or other electric lights or power circuits, or where it can fall into such power lines or circuits. When installing an outside antenna system, extreme care should be taken to keep from touching such power lines or circuits as contact with them might be fatal.

17. For added protection for this television set during a lightning storm, or when it is left unattended and unused for long periods of time, unplug it from the wall outlet and disconnect the antenna. This will prevent damage due to lightning and power-line surges.

OPERATION OF YOUR SET

18. This television set should be operated only from the type of power source indicated on the marking label. If you are not sure of the type of power supply at your home, consult your television dealer or local power company. For television sets designed to operate from battery power, refer to the operating instructions.

19. If the television set does not operate normally by following the operating instructions, unplug this television set from the wall outlet and refer servicing to qualified service personnel. Adjust only those controls that are covered in the operating instructions as improper adjustment of other controls may result in damage and will often require extensive work by a qualified technician to restore the television set to normal operation.

20. When going on a holiday : If your television set is to remain unused for a period of time, for instance, when you go on a holiday, turn the television set "off" and unplug the television set from the wall outlet.

IF THE SET DOES NOT OPERATE PROPERLY

21. If you are unable to restore normal operation by following the detailed procedure in your operating instructions, do not attempt any further adjustment. Unplug the set and call your dealer or service technician.

22. Whenever the television set is damaged or fails, or a distinct change in performance indicates a need for service, unplug the set and have it checked by a professional service technician.

23. It is normal for some TV sets to make occasional snapping or popping sounds, particularly when being turned on or off. If the snapping or popping is continuous or frequent, unplug the set and consult your dealer or service technician.

FOR SERVICE AND MODIFICATION

24. Do not use attachments not recommended by the television set manufacturer as they may cause hazards.

25. When replacement parts are required, be sure the service technician has used replacement parts specified by the manufacturer that have the same characteristics as the original part. Unauthorized substitutions may result in fire, electric shock, or other hazards.

26. Upon completion of any service or repairs to the television set, ask the service technician to perform routine safety checks to determine that the television is in safe operating condition.

2. SPECIFICATION

Model / Item	机型 / 内容	HD29V88(RUSSIA)	HD29A71(HK)	HD29A71(RUSSIA)	HD29A71(SINGAPORE)	32E88AR
Master Data	**主要数据**					
-Customer ID	-顾客ID	ELDORADO	TCL	TCL	TCL	TCL
-Destination	-目的地	Russia	Hongkong	Russia	Singapore	Australia
-Brand	-牌子	THOMSON	TCL	TCL	TCL	TCL
-BOM NO.	-BOM号	03-BV88NHE-UR2	03-BA71NHE-HK3	03-BA71NHE-UR2	03-BA71NHE-SG2	03-LE88TR-AA27
-Assembling Way	-走货方式	SKD	Unit	Unit	Unit	Unit
-Chassis	-机芯号					MS21-EM
Reception	**接收**					
ATV	**模拟电视系统**					
-Tuning [Channels Amt.]	-频道数量	200	200	200	200	200
-Tuning [Technology]	-调谐技术	FS	FS	FS	FS	FS
-Tuning [Indication]	-搜台指示	Digital and Bar	Digital and Bar	Digital and Bar	Digital and Bar	Digital and Bar
-Frequency Bands	-频率波段	Full Cable	Full Cable	Full Cable	Full Cable	Full Cable
-IF Frequency	-中频频率	38.9MHz	38MHz	38.9MHz	38.9MHz	38.9MHz
-TV Systems (Color+ Sound)	-TV制式 (彩色+声音)	PAL SECAM B/G, D/K, I	PAL SECAM B/G, D/K, I NTSC M	PAL SECAM B/G, D/K, I	PAL SECAM B/G, D/K, I	PAL SECAM B/G, D/K, I
-AV Systems	-AV制式	PAL SECAM NTSC	PAL SECAM NTSC	PAL SECAM NTSC	PAL SECAM NTSC	PAL SECAM NTSC
DTV	**数字电视系统**					
- DTV system	-数字电视系统					DVB-T(FTA , Australia)
-Tuner and Channel						
Frequency Range	频率范围					51 to 858 MHz
IF-center frequency	中频中心频率					36.13MHz
Digital Signal Input Level	数字信息输入电平					-30dBmV to 75dBmV
Demodulation	解调方式					COFDM
Constellation	星座					QPSK, 16-QAM, 64-QAM
Tuner Bandwidth	高频头带宽					7 MHz/8MHz
FFT mode	频率载波模波					2K/8K
Guard Interval	保护间隔					1/4, 1/8, 1/16, 1/32, off
FEC Code Rate	向前纠错码率					1/2, 2/3, 3/4, 5/6 and 7/8
-MPEG decode	MPEG解码					
Transport Stream	传输流					MPEG-2 ISO/IEC 13818, Transport stream specification
Profile Level	MPEG					MPEG-2 MP@ML.
Video Resolution	分辨率					SD 576i
Picture-Processing	**图像处理**					
-SCAN	-扫描方式	Pscan	Pscan	Pscan	Pscan	Pscan
-Wide Screen Switching	-宽屏幕转换	4:3	4:3	4:3	4:3	16:9
-Comb filter	-梳状滤波器	PAL NTSC	PAL NTSC	PAL NTSC	PAL NTSC	PAL NTSC
-Picture Enhancement	-图像提升					

Model / Item	机型 / 内容	HD29V88(RUSSIA)	HD29A71(HK)	HD29A71(RUSSIA)	HD29A71(SINGAPORE)	32E88AR
LTI / CTI	亮度/色度提升电路					
Black Stretch	黑电平延伸	X	X	X	X	X
Blue Stretch	蓝电平延伸	X	X	X	X	X
Dynamic Skin	动态肤色	X	X	X	X	X
Others	其他					
-Picture Control [General]	-图像控制 [普通的]					
Brightness	亮度	X	X	X	X	X
Sharpness	清晰度	X	X	X	X	X
Contrast	对比度	X	X	X	X	X
Tint	色调	X	X	X	X	X
Color	色度	X	X	X	X	X
-Picture Control [Special]	-图像控制 [特殊的]					
Smart Pictures * modes	图像美化模式	4	4	4	4	4
VM	速率调制	X	X	X	X	X
Color Temperature	色温	X	X	X	X	X
Others	其他					
-Picture Noise Reduction	-图像降噪	X	X	X	X	X
Picture – Display	**图像显示**					
-CRT Type	-CRT类型					
Normal Flat	普平					
Pure Flat	纯平	X	X	X	X	X
Super Flat	超平					
-Deflection system	-偏转系统					
1Fh	1Fh					
2Fh	2Fh	2H	2H	2H	2H	2H
-Tube Technology	-显象管技术(具体看CRT规格书而定)					
Iron	铁（材料）					
AK	AK钢					
Inver	铟瓦钢					
Black Matrix	黑色聚阵(关机后CRT屏幕颜色)					
Others	其他					
-CRT Deflection (* Deg.)	-CRT偏转度（90，110...）	110	110	110	110	106
-CRT Magnetic Field	-CRT磁场区域					Bv= -0.40 Bh= 0.3
-Screen Ratio	-屏幕比率	4:3	4:3	4:3	4:3	16:9
-Screen Size / Vis. Size	-屏幕尺寸/ 视觉尺寸	29'/27'	29'/27'	29'/27'	29'/27'	32'/30'
Sound	**声音**					
ATV						
-Audio Power Consumption	-伴音功耗	6 W+6W	6 W+6W	6 W+6W	6 W+6W	6 W+6W

Model / Item	机型 / 内容	HD29V88(RUSSIA)	HD29A71(HK)	HD29A71(RUSSIA)	HD29A71(SINGAPORE)	32E88AR
-Surround Sound	-环绕立体声					
-Nicam	-丽音	X	X	X	X	X
-America Stereo (MTS,BTSC,MPS)	-美国立体声					
-America SAP	-美国SAP					
-Korea Stereo	-韩国立体声					
-Thai Bilingual	-泰国双语					
-Super Woofer	-超重低音					
-AVL	-自动音量平衡					
-Sound Control [General]	-声音控制（普通的）					
Volume	音量	X	X	X	X	X
Mute	静音	X	X	X	X	X
-Sound Control [Special]	-声音控制（特殊的）					
Treble	高音					
Bass	低音					
Balance	平衡					
Equalizer	均衡	X	X	X	X	X
Smart Sound * modes	声音美化模式	4	4	4	4	4
Others	其他					
-Speakers Quantity	-喇叭数量	2	2	2	2	4
-Speakers Size	-喇叭尺寸	6X13cm	8X16cm X2	8X16cm X2	8X16cm X2	7X17cm X2 2.5cm X2
DTV						
-Audio Decoding	音频解码					MPEG layer I and II, Musicam,AC-3
-Audio Output Mode	音频输出模式					Stereo Channel, Joint Stereo Channel,Mono
User Interface	**用户界面**					
ATV						
-Menu Language	-菜单语言	English/Russia	English/Chinese	English/Russia	English	English
-Features [General]	-特点（普通的）					
AT	音响电视					
Auto Sleep	自动睡眠(是指X小时不操作电视,电视自动休眠)					
AV Lock	AV锁					
Biological clock	生物钟					
Calendar	日历					
Clock	时钟	x	X	X	X	X
Channel Skip	频道跳跃	X	X	X	X	X
Channel Swap	频道互换(两个频道互换位置)	X	X	X	X	X
Channel Adjustment	频道互换(1个频道取代另一个)					
Channel Naming	频道命名					

Model / Item	机型 / 内容	HD29V88(RUSSIA)	HD29A71(HK)	HD29A71(RUSSIA)	HD29A71(SINGAPORE)	32E88AR
Channel Lock	频道锁					X
Child Lock	童锁	X	X	X	X	X
Favorite Channel	喜爱频道	X	X	X	X	
Game	游戏					
Hotel Mode	宾馆模式	X	X	X	X	X
High Sensitive	超强接收					
Notebook	记事簿					
On/Off Timer	定时开/关机	X	X	X	X	X
Panel Lock	按键锁					
Parent Guide	父母指导					
Preset	频道预置(宾馆模式中，用户不可调)	X	X	X	X	
Programe prearrange	节目预置（用户可调）	X	X	X	X	X
Recall	回看	X	X	X	X	X
Rotation	地磁校正(旋转)	X	X	X	X	X
Others	其他					
-Features [Special]	-特点(特殊的）					
V-chip / CCD	V-chip / CCD					
Teletext *Pages	图文	10 pages		10 pages	10 pages	10 pages
FM Radio	FM收音机					
Others	其他					CCD for Australia
DTV						
- DTV Menu language	-DTV菜单语言					English
-Channel edit name	-频道编名					X
-Channel list	-频道列表					X
-Channel delete	-频道删除					X
-Channel lock	-频道锁					X
-Favorite Channel and set	-喜好频道					X
-EPG(NOW/NEXT)	-电子节目表					X
-List schedule EPG	-EPG节目预定列表					X
-Audio language Setting	-声音语言设置					X
-Subtitle language setting	-字幕语言设置					X
-Time zone	-时区					X
-Password	-密码					X
-Return	-返回					X
-Sleep	-睡眠					X
-CCD/TELETEXT,SUBTITLE	-CCD/TELETEXT,SUBTITLE					X
Tuning Features	**调谐特点**					

Model / Item	机型 / 内容	HD29V88(RUSSIA)	HD29A71(HK)	HD29A71(RUSSIA)	HD29A71(SINGAPORE)	32E88AR
ATV						
-Auto Channel Program	-自动频道编排					
-Auto/Manual Tuning	-自动 / 手动搜台	X	X	X	X	X
-Auto/Manual Store	-自动 / 手动存储					
-Fine Tuning	-微调	X	X	X	X	X
-Factory Mode	-工厂模式	X	X	X	X	X
-Service Mode	-维修模式					
DTV						
-First time installation	-初始安装					X
-Auto/Manual Tuning	-自动 / 手动搜台					X
-Auto/Manual Store	-自动 / 手动存储					X
Cabinet	**外壳**					
-Cabinet Name	-外壳名称	29V88	29A71	29A71	29A71	32E88
-Front Cabinet Color	-前壳颜色					
-Middle Cabinet Color	-中壳颜色					
-Rear Cabinet Color	-后壳颜色					
-Number of Local Control(incl.Mains)	-本机控制按键孔数量(包括主开关)	7	7	7	7	7
-Number of Indicator Control(incl.Mains)	-本机指示灯数量(包括主开关上的灯)	1	1	1	1	1
Local Controls Front	**-正面的控制孔**					
-Mains Switch	电源开关	X	X	X	X	X
-CH+ CH- VOL+ VOL-	频道+-，音量+-	X	X	X	X	
-TV/AV	TV / AV	X	X	X	X	
-Menu	菜单	X	X	X	X	
-Auto Search	自动搜台					
Local Controls Top	**-顶部的控制孔**					
-CH+ CH- VOL+ VOL-	频道+-，音量+-					
-TV/AV	TV / AV					
-Menu	菜单					
-Auto Search	自动搜台					
Local Controls Side	**-侧面的控制孔**					
-CH+ CH- VOL+ VOL-	频道+-，音量+-					X
-TV/AV	TV / AV					X
-Menu	菜单					X
-Auto Search	自动搜台					
Indicator	**-指示灯**					
-RC Received LED	遥控接收灯					
-Color of RC Received LED	遥控接收灯颜色					

Model / Item	机型 / 内容	HD29V88(RUSSIA)	HD29A71(HK)	HD29A71(RUSSIA)	HD29A71(SINGAPORE)	32E88AR
-Standby LED	待机灯	X	X	X	X	X
-Color of Standby LED	待机灯颜色	Blue	Blue	Blue	Blue	Blue
Remote Controller	**遥控器**					
-Type	-类型		Q			
-Batteries Type	-电池	AA X2	AAA X2	AA X2	AA X2	AA X2
Connectors Rear	**后壳端子接口**					
-SCART Full (RGB) w/o Y/C	不含Y/C的SCART					
-SCART Full with Y/C	含Y/C的SCART					
-SCART Single (CVBS)	-单SCART接口(CVBS)					
-Component In (YPbPr) Cinch for	YUV	1	1	1	1	1
-In Y/C+Cinch(CVBS+ Stereo)	-In Y/C+Cinch(CVBS+ Stereo)					
-In Y/C+Cinch (CVBS+ Mono)	-In Y/C+Cinch (CVBS+ Mono)					
-In Cinch(CVBS+ Stereo)	-In Cinch(CVBS+ Stereo)	1	2	2	2	2
-In Cinch (CVBS+ Mono)	-In Cinch (CVBS+ Mono)					
-Out Cinch(CVBS+ Stereo)	-Out Cinch(CVBS+ Stereo)	1	1	1	1	1
-Out Cinch(CVBS+ Mono)	-Out Cinch(CVBS+ Mono)					
-Super Woofer	-超重低音接口					
-Loudspeakers	-外接喇叭口					
-S/PDIF Digital Audio Out	-数字音频输出					1
-Rs232	-Rs232接口					1
-Control Busses	-控制总线					
-After Service Slot	-售后维修口					
-ITV Smart Port	-ITV 通信端口					
- Antenna in	-天线输入端口					
75 Ohms (IEC Type)	75 ohms (IEC类型)	1	1	1	1	1
-Component In (YPbPr) Cinch for	高清接口	1	1	1	1	1
VGA	VGA		1	1	1	1
Connectors Front	**正面端子接口**					
-In Y/C+Cinch(CVBS+ Stereo)	-In Y/C+Cinch(CVBS+ Stereo)					
-In Y/C+Cinch (CVBS+ Mono)	-In Y/C+Cinch (CVBS+ Mono)					
-In Cinch(CVBS+ Stereo)	-In Cinch(CVBS+ Stereo)					
-In Cinch (CVBS+ Mono)	-In Cinch (CVBS+ Mono)					
-Out Headphone	-耳机输出端口					
Mini-Jack 3.5mm	袖珍插孔 3.5mm					
Connectors Side	**侧面端子接口**					
-In Y/C+Cinch(CVBS+ Stereo)	-In Y/C+Cinch(CVBS+ Stereo)	1	1	1	1	1
-In Y/C+Cinch (CVBS+ Mono)	-In Y/C+Cinch (CVBS+ Mono)					
-In Cinch(CVBS+ Stereo)	-In Cinch(CVBS+ Stereo)					

Model / Item	机型 / 内容	HD29V88(RUSSIA)	HD29A71(HK)	HD29A71(RUSSIA)	HD29A71(SINGAPORE)	32E88AR
-In Cinch (CVBS+ Mono)	-In Cinch (CVBS+ Mono)					
-Out Headphone	-耳机输出端口					
Mini-Jack 3.5mm	袖珍插孔 3.5mm					
Final Equipment	**出厂资料**					
-Packing –Methods	-包装方法					
* Colors Printing	*种颜色					
Carton Color	纸箱颜色					
-Documents and Manuals	-文件和手册					
Instruction Book	说明书	X	X	X	X	X
Screen Sticker	屏幕贴纸					
Plastic Bag	塑料袋	X	X	X	X	X
Warranty Card	保修卡					
Guarantee Doc.	保证书					
Warning Label	警告标签	X	X	X	X	X
Approbation Label	认证标签	X	X	X	X	X
Others	其他					
-Languages Istruction Book	-说明书语言	English	English/Chinese	English	English	English
-Indication on BACKOVER	-后壳的标示	English	English	English	English	English
Made-in in family sheet	制造产地标签					
FCC/Elect Shock Caution Label	FCC/ Elect 小心警告标签					
CE/Elect Shock Caution Label	CE/ Elect 小心警告标签					
Warning Label	警告标签					
Others	其他					
Approbation	**认证**					
FCC	FCC					
FDA	FDA					
UL/CUL	UL/CUL					
CB	CB	X		X	X	X
VDE	VDE					
Others	Others		3C			
Miscellaneous	**其他的**					
-Mains Voltage	-电源电压	160 - 250V	160 - 250V	160 - 250V	160 - 250V	160 - 250V
-Mains Frequency	-电源频率	50Hz	50Hz	50Hz	50Hz	50Hz
-Type Mains Cord	-电源线类型	51-DC0243-0CN04	51-DC0243-0AN08	51-DC0270-0VN08	51-DC0270-0VN08	51-JC0243-0PN01
-Type Mains plug	-电源插头类型	51-DC0243-0CN04	51-DC0243-0AN08	51-DC0270-0VN08	51-DC0270-0VN08	51-JC0243-0PN01
-Power Consumption TV in ON	-开机功耗	160W	160W	160W	160W	180W
-Power Consumption TV in Standby	-待机功耗	9W	9W	9W	9W	1W

Ⅰ. Summarize：

These model that cancels DTV function on the foundation of MS21EM, reserves the diagram text, NICAM (note: The machine of Hong Kong only contain NICAM). Use 29" tube of ChangShaLeJin in current(LG-PHILIPS A68QCU770XV40M),and adopt the super IC UOC3 of PHILIPS that gathers the MCU, decode, sound effect...etc. The process of horizontal frequency and OSD module adopts the MST5C16A of MSTAR. The OM8380H of PHILIPS is used for behind processing of display. Main function in this machine: various mode of TV/ AV, 50P/60P/75P/75I/100I mode of PAL system, 60P/120I mode of NTSC system,VGA640X480/60Hz(75Hz),SVGA800X600/60Hz(75Hz),XGA1024X768/60Hz(75Hz),and the HDTV supports four kinds of modes:1920X1080I/60Hz,1920X1080I/50Hz,1280X720P/60Hz,1920X1080P/60Hz;The SDTV supports two modes:525P,625P.

There are 2 operation modes： user mode and factory mode. You can use the Remote control or buttons on the panel to operate in user mode, but only Remote control works in factory mode.

The way to enter factory mode：1)one method:Press “MUTE” button and “DISPLAY” button by turns on RC three times. 2)another method: press “SERVICE MODE” key on RC to enter the factory mode directly. To quit factory mode， press “SERVICE MODE” or “MENU” button.

Ⅱ. Alignment procedure：

Please read instruction book before operate this set, and adjust the tv set in factory as below:

1. Adjustment of B+ voltage：

Receive Philips standard testing pattern to RF input.

Adjust VR801 in STANDARD mode until voltage at following value：

Signal	Picture Mode	Adjust Point	Monitor Point	Value
PHILIPS Standard Test Card	Standard	VR801	The point of J812/J813	142±0.3V

2. SCREEN voltage adjustment:

（AV2 Input gray signal）

Signal	Picture	Adjust Point	Monitor Point	Value
gray signal	Standard	FBT SCREEN variable Resister	Using High Voltage Probe(1000:1)to test the SCREEN point in CRT board	0.6V

3.Focus voltage adjustment

Apply Grid signal with black background.

Chassis Name	MS21-SOEM	**Serial No.**	
Issued on	2006-11-22	**Page**	
Updated on	2007-09-11	**Version**	

Setting picture is at Standard status.

Adjusting the focus variable resister of FBT to make the picture focused best, monitoring the H and V line at 3/4 in screen.

4.The system setting in the factory mode:

The way to enter factory mode：1)one method:Press "MUTE" button and "DISPLAY" button by turns on RC three times. 2)another method: press"SERVICE MODE" key on RC to enter the factory mode directly. Then press "7"key to enter the "FAC ADJ" menu.

Adjustable items	Default setting	Remark
POWER ON MODE	LAST	Power on/standby switch
LOGO	ON/OFF	LOGO switch
VIDEO MUTE	FREEZE	Picture freeze setting when change channel
BACKGROUND	BLUE	Blue background switch when no signal
SUB BRI	0(5 for hd29v88)	Sub-brightness adjusting
BG	1	BG switch
DK	1	DK switch
I	1	I switch
M	0(UR、SG)、1（HK）	M switch(choose 1 in Hong Kong machine)
DEFAULT	I(HK)、DK(UR)、BG(SG)	Default sound system
SCREEN	4:3	Choose tube
IF	38.9MHZ(UR、SG)38.0MHZ(HK)	intermediate frequency（choose 38MHZ in Hong Kong machine）
TUNER	PHILPS(UR、SG)ALPS(HK)	Choose tuner(choose ALPS in Hong Kong machine)

Please choose "FAC" in the item" POWER ON MODE" before aging the machine, and choose "LAST" at the last working procedure.

5.Function setting:

Because different customers need the TV set contain different functions, so we must set the TV function. Press "5" key to set.

Adjustable items	Default setting	Remark
P50P	√	PAL 50Hz progressive mode
P75P	√	PAL 75Hz progressive mode
P75I	√	PAL 75Hz interleaved mode

P100I	√	PAL100Hz interleaved mode
N120I	√	NTSC 120Hz interleaved mode
HDTV	√	YpbPr input
PC	√（X for hd29v88）	VGA input
HDMI	-	HDMI input
GUIDE	-	Guide function switch
IDTV	-	IDTV input
ENGLISH	√	English OSD
CHINESE	-	Chinese OSD (choose this in Hong Kong machine)
RUSSIA	-	Russia OSD(choose this in Russia machine)
TURKIA	-	Turkish OSD

6.Geometry adjustment of PAL and NTSC in TV mode:

Input PAL signal and NTSC signal (PHILIPS test card) separately, and then adjust below items:

Enter the factory mode, and press "1" key on RC to enter the "V ADJ" menu.

VSLOP	Based on request	Vertical Liner Correction
VCENT	Based on request	Vertical center
VSIZE	Based on request	Vertical size
VSCOR	Based on request	Vertical S Correction
VZOOM	25	Nonadjustable（Vertical zoom size）
VSCRO	30	Nonadjustable（vertical picture position）
VWAIT	25	Nonadjustable（vertical scan start）
D6	227	Nonadjustable (horizontal frequency glancing adjustment)
D7	54	Nonadjustable （ horizontal frequency glancing adjustment）

Instruction: the adjustable items in TV mode: PAL: PAL 60P,PAL 75P,PAL 75Hz900L,PAL 100Hz;NTSC: NTSC 60P,NTSC 120I.

The default setting of D6,D7 in TV every scan mode:in the table (x) for hd29v88 model

	60P	75P	75I	100I	50P	NTSC60P	NTSC120I
D6	227(166)	227(166)	227(82)	227(83)	227(166)	227(161)	227(79)
D7	54	54	27	27	54	54	27

**note: The standard that VSLOPE adjustment is make the test card level center line can't see at the right moment.

Enter the factory mode, and press "2" key on RC to enter the "H ADJ" menu.

HCENT	Based on request	Horizontal center
HSIZE	Based on request	Horizontal size
HPARA	Based on request	Parallelogram correction
HTRAP	Based on request	Trapezium correction
HPARA	Based on request	Parabola correction
HBOW	Based on request	Bow correction
HUPCN	Based on request	Horizontal Top Corner Correction
HLOWCN	Based on request	Horizontal Bottom Corner Correction
E-W EHT	40	nonadjustable（E-W EHT）
HTIMING	7	nonadjustable（Horizontal timing）
SCANMODE	***	Scan mode
AUTO OFFSET	***	Geometry auto offset

7. Geometry adjustment in PC, HDTV mode:

Input the PC test signal or HDTV test signal in the PC or HDTV mode, then enter the factory mode, press "2"or "1"key to adjust the H and V as above. The adjustable items in PC mode: 640×480/60Hz，800×600/60Hz，1024X768/60HZ.

The below table is the default value of D6 and D7 in the HDTV and PC mode: in the table (x) for hd29v88 model and without VGA mode

	HDTV										PC		
	1080I/60HZ		525P	1080I/50HZ		720P		625P	1080P/60HZ		640X480 /60HZ	800X600 /60HZ	1024X768 /60HZ
	4:3	16:9	4:3	4:3	16:9	4:3	16:9	4:3	4:3	16:9			
D6	230 (172)	230 (172)	230 (163)	230 (172)	230 (172)	230 (172)	230 (172)	230 (169)	230 (167)	230 (167)	230	230	230
D7	54	54	54	54	54	54	54	54	54	54	54	54	54

8. Geometry adjustment of blue background and the OSD position:

These model does not need to adjust the Geometry adjustment of blue background and the OSD position.

9.TXT and brightness delay adjustment:

In the factory mode, press "6" key to enter this item:

Adjustable items	Default setting	Remark
TXT-ON	1	TXT(diagram text)switch

TXT-SPLIT	0	TXT display on two pages
TXT-H-POS	11	TXT Horizontal position
TXT-H-POSA	21	The position of "A" page when TXT display on two pages
TXT-H-POSB	3	The position of "B" page when TXT display on two pages
TXT-H-BOXB	73	The anti-white position when TXT display on two pages
YSECAM	15(UR、SG)15(HK)	SECAM Y signal position adjustment
YNTSC	0(UR、SG)7(HK)	NTSC Y signal position adjustment
YPAL	12(UR、SG)9（HK）	PAL Y signal position adjustment
YAV1	12(UR、SG)15(HK)	AV1 Y signal position adjustment
INIT TV	0	EEPROM reset,"1" is reset

10. Adjustment of Color Temperature:

White Balance Coordinator: X=0.284,Y=0.297

Input the white field signal , in the factory mode, press "3" key to enter the "WHITE TONE" adjustment. Adjust the WPR, WPG, BLOR, BLOG four items when fix the WPB at 40.

The below mode adjust separately: TV(60P); 640X480/60HZ,800X600/60HZ,1024X768/60HZ in PC mode;1920X1080I/60Hz,1920X1080I/50Hz,1280X720P/60Hz,1920X1080P/60Hz,525P,625P in HDTV mode. Please adjust White Balance at the standard picture and color temperature mode.

WPR	***	Based on request（red gun gain）
WPG	***	Based on request（green gun gain）
WPB	40	Based on request（blue gun gain）
BLOR	***	Based on request（red gun black）
BLOG	***	Based on request（green gun black）
PWL	8	nonadjustable（peak white limited）
AUTO OFFSET	***	White balance auto offset

11.contrast, brightness, chroma, tone, sharpness curve adjustment:

This machine contrast, brightness, chroma, tone, sharpness have four kinds of modes saving, TV, HDTV, PC, YUV. The factory can't adjust. Press "4" key to enter the "CURVE ADJ" item in the factory mode. The default setting as below table:

TV	BRI	CON	SAT	TINT	SHARP	YUV	BRI	CON	SAT	TINT	SHARP

0	9	9	3	0	0		9	9	0	0	0
30	16	23	17	16	22		16	23	13	16	22
50	24	29	26	32	32		24	29	23	32	32
80	35	36	35	48	34		35	40	30	48	34
100	40	50	45	58	38		40	50	35	58	38

HDTV	BRI	CON	SAT	TINT	SHARP	VGA	BRI	CON	SAT	TINT	SHARP
0	9	9	0	0	0		9	9	0	0	0
30	16	15	15	16	22		17	17	10	16	22
50	28	25	25	32	32		25	28	25	32	32
80	32	35	30	48	34		32	33	30	48	34
100	35	50	38	58	38		38	38	38	58	38

12.the SVM adjustment:

In the factory mode, press "8" key on RC to enter the "SVM ADJ" item.

SVM is only effective for TV/AV/YUV/S-video. The factory can't adjust this item.

	60P	75P	75I	100I	50P	N60P	N120I	
SVM PW	1	1	1	1	1	1	1	SVM switch
SVM	20	20	20	20	20	20	20	SVM intensity
SVM DL	7	7	7	7	7	7	7	SVM position

13.UOC3 setting:

U-BRI	32	UOC3 output signal brightness adjust
U-CON	50	UOC3 output signal contrast adjust
AGC SPEED	1	UOC3 AGC speed
AGC TAKEOVER	22(16)	UOC3 AGC takeover(ALPS TUNER)
COMBFILE	1	Comb filter switch

14.soft version and factory switch:

In the factory mode, press " display" key on RC to enter the "DISPLAY MENU" item, as below table:

SW VERSION	***	Soft version
FACTORY	OFF	Factory mode switch， set "OFF" at the last working procedure
HOTEL SW	OFF	Hotel switch, nonadjustable

Chassis Name	MS21-SOEM	**Serial No.**	
Issued on	2006-11-22	**Page**	
Updated on	2007-09-11	**Version**	

AUTO OFFSET	OFF	Auto offset switch, auto offset is effective when it is "ON".

15. Designer's menu:

In the factory mode, press "-/--/---" key on RC to enter "IIC CONTROL" item. The factory can't adjust this item.

16. An elucidation for adding items concerning factory menu:

Two more items at the ninth page:

DCXO

DCXO AUTO

Adjust DCXO before PE making seed. Adjust DCXO method: choose a PAL B/ G channel with NICAM ,then choose DCXO AUTO at the factory menu ninth page, software will adjust the crystal frequency automatically.

Note:This adjustment must be done for every set on the line.

(1) PE adjust white balance and geometry each mode in advance, then enter the "Designer's menu", choose "INIT AUTOOFFSET" to save the offset. So seed has been completed.

(2) In the factory, just adjust the white balance and geometry in the TV60P mode, then set the "AUTO OFFSET" switch "ON" as the above 14 description, after that choose the "AUTO OFFSET" at the 2nd and 3rd page separately in the factory menu, so the offset will be saved to each mode.

17. Initial setting:

Last working procedure need to set the initial setting, method is: Enter the factory menu, press the geometry reset key on RC to set the initial setting. After that, the machine will be standby.

18.Important notice:

On the digital board, UD3(13-00M24C-32P) must be burned EDID before surface mount.

THE CIRCUIT ITSELF AND ITS CONTAINS ARE SUBJECT TO CHANGE WITHOUT NOTICE

THIS DRAWING CANNOT BE COMMUNICATED TO UNAUTHORIZED PERSONS COPIED UNLESS PERMITTED IN WRITING.

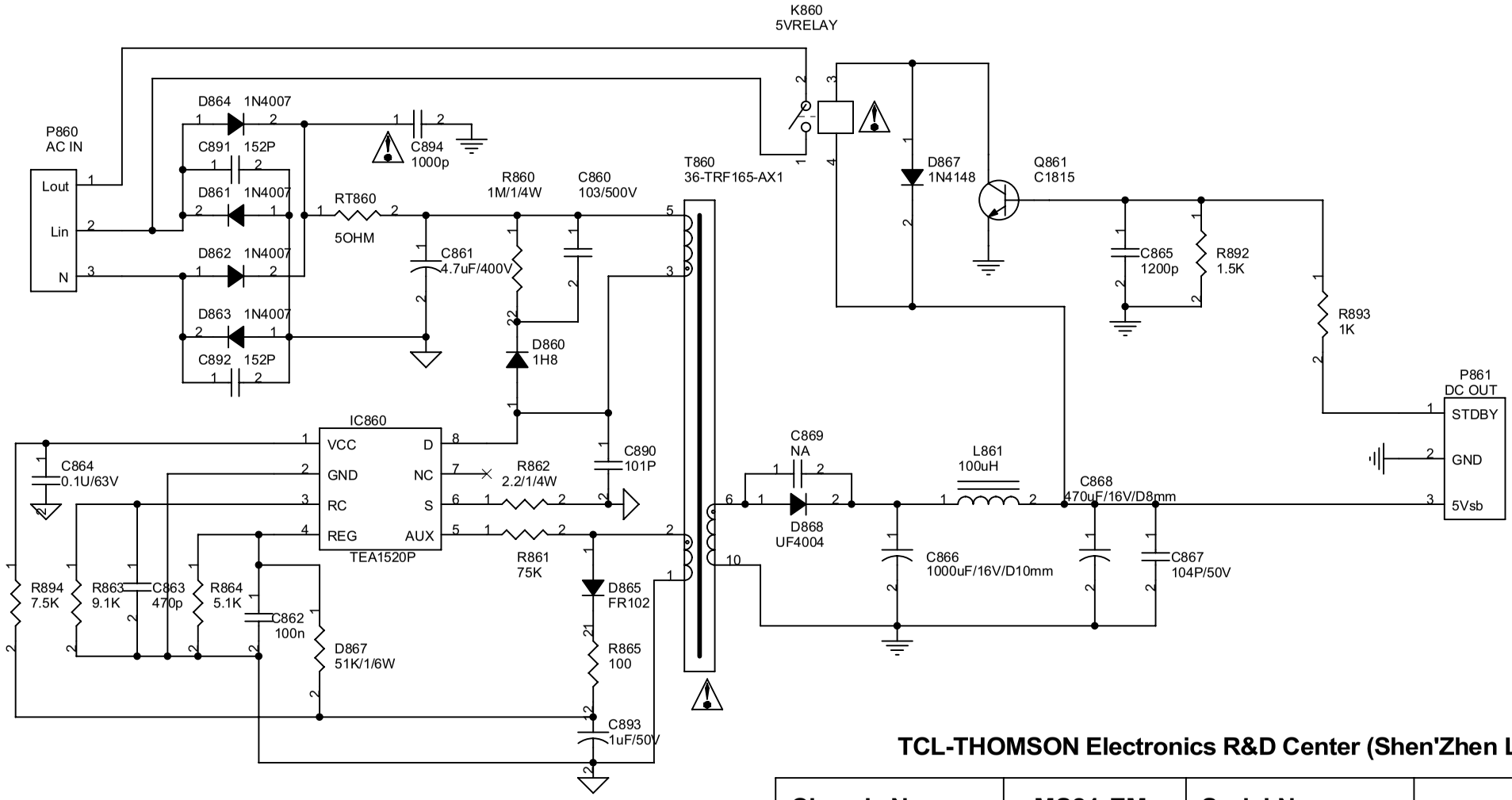

Safety Part

When repairing, use original part only.

TCL-THOMSON Electronics R&D Center (Shen'Zhen Lab)

Chassis Name	**MS21-EM**	**Serial No.**	01-MS21EM-PWY
Prepared by		**Issued on**	2005-08-18
Countersigned by		**Updated on**	
Reviewed by		**Version**	1.0

THE CIRCUIT ITSELF AND ITS CONTAINS ARE SUBJECT TO CHANGE WITHOUT NOTICE

THIS DIAWING CANNOT BE COMMUNICATED TO UNAUTHORIZED PERSONS COPIED UNLESS PERMITTED IN WRITING

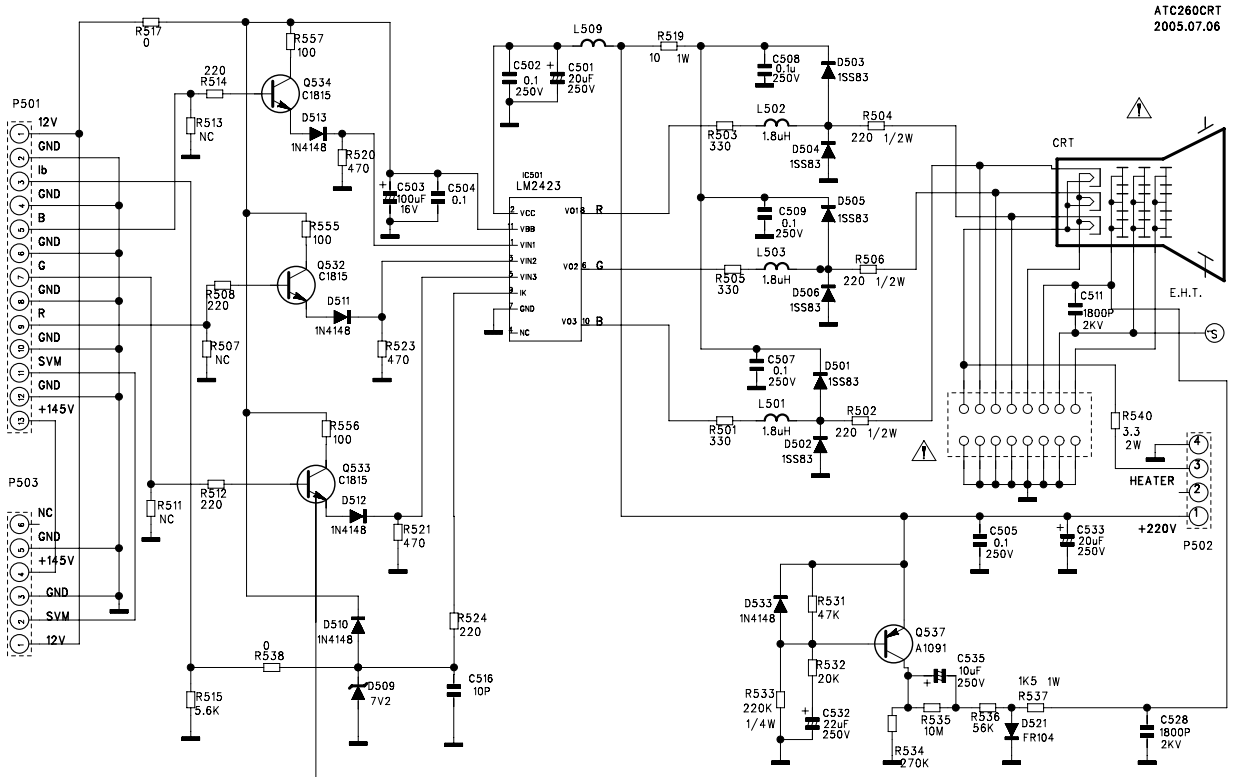

Safety Part
When repairing,use original part only.

TCL-THOMSON Electronics R&D Center(Shen'Zhen Lab)

Chassis Name	MS21-EM	Serial No.	01-MS21EM-CRY
Prepared by		Issued on	2005-08-18
Countersigned by		Updated on	
Reviewed by		Version	1.0

THE CIRCUIT ITSELE AND ITS CONTAINS ARE SUBJECT TO CHANGE WITHOUT NOTICE

THIS DRAWING CANNOT BE COMMUNICATED TO UNAUTHORIZED PERSONS COPIED UNLESS PERMITTED IN WRITING

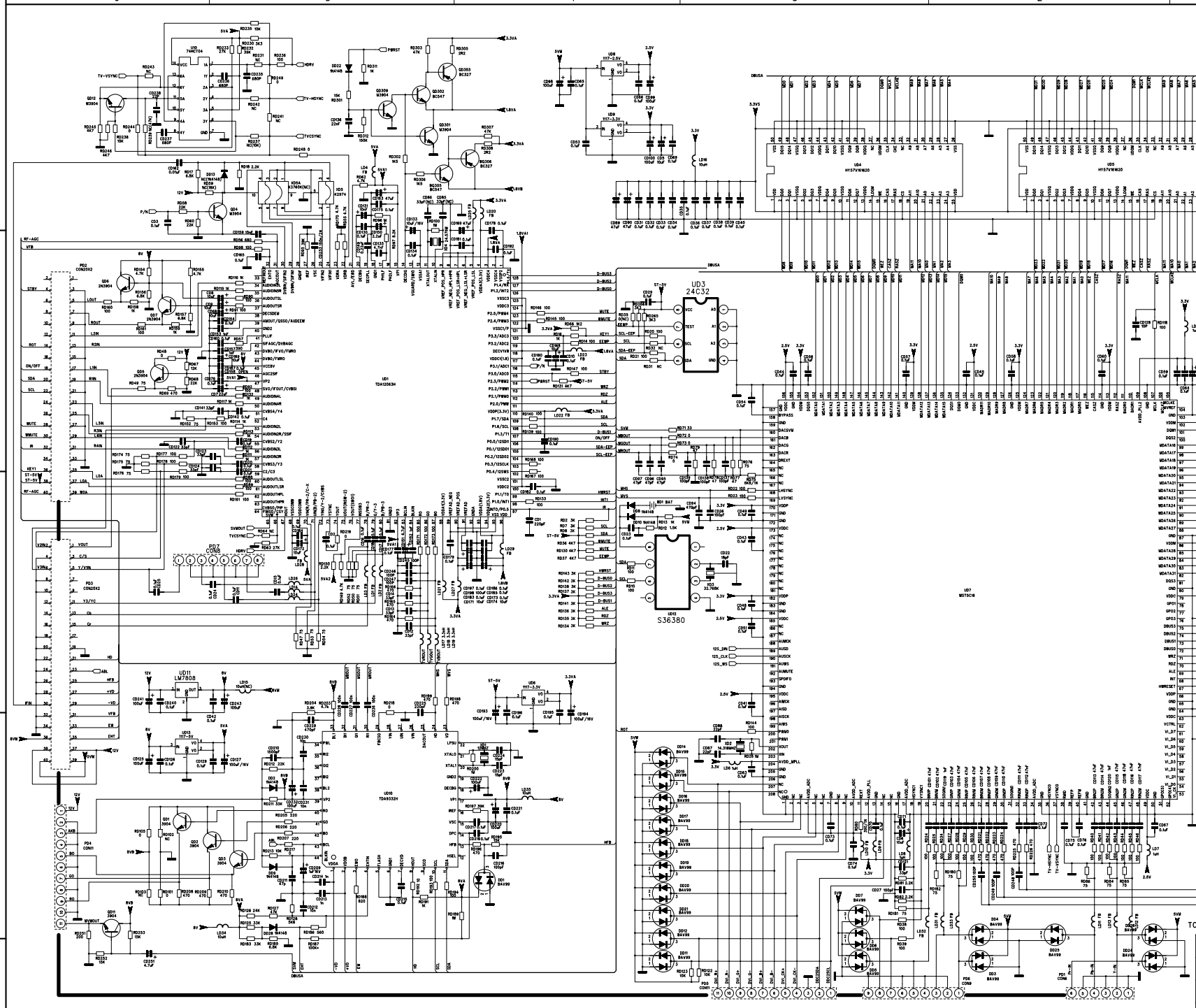

TCL-THOMSON Electronics R&D Center (Shen'Zhen Lab)

Chassis Name	MS21EM	Serial No	01-MS21EM-[illegible]
Prepared By		Issued on	2005-08-18
Countersigned By		Updated	
Reviewed By		Version	1.0

THE CIRCUIT ITSELF AND ITS CONTAINS ARE SUBJECT TO CHANGE WITHOUT NOTICE

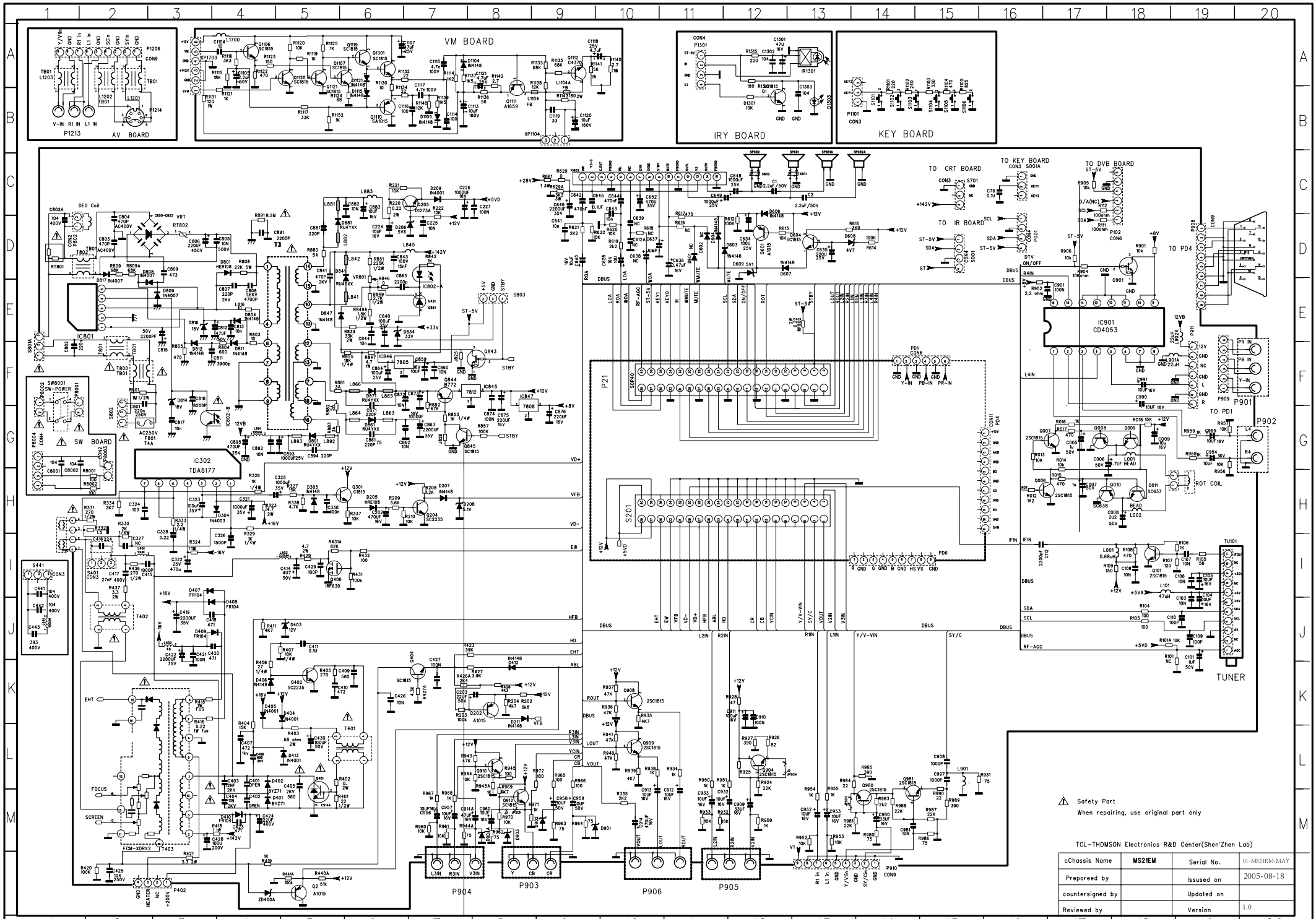

THIS DRAWING CANNOT BE COMMUNIATED TO UNAUTHORIZED PERSONS COPIED UNLESS PERMITTED IN WRITING

TCL-THOMSON Electronics R&D Center(Shen'Zhen Lab)

cChassis Name	MS21EM	Serial No.	01-MS21EM-MAY
Prepareed by		Issused on	2005-08-18
countersigned by		Updated on	
Reviewed by		Version	1.0

HOT
CORD
AC IN
DIP
DIP

6. BOM LIST

PART NO.	SEPC	QTY	LOCATION
74-120120-8CD	POLYBAG (120CMX120CM)	1	FOR FRONT CABINET
42-61308F-XX7G	SPEAKER YDF613-37A	2	SP601 SP602
46-14026H-02XG	HS 2P 2468#22 570MM S11-2Y/7MM	1	FOR SP601
46-35197H-02XG	HS 2P22 700/7 TJC3-2Y	1	FOR SP602
54-114000-00X	FELT TAPE (150MMX19MMX0.3MM)	9	MTG F.CAB
54-310140-000	SPONGE PAD 50.5X22	2	FOR SPEAKER
55-BV88FC-0CN9A	DEC FRONTPANEL BV88 BLACK 01 00 00 R=N	1	
56-DV88LE-0HC5Z	LENS	1	
56-DV88PK-0HA5B	TV PAI KEY BV88 A6712 R=N	1	
57-CMDV88-CX11A	TOUCH SCREEN	1	
59-130460-00X	RUBBER PAD (25MMX7MM)	2	STICK ON FRONT CABINET(FOOTING)
62-388180-0HA	POWER SW.ADAPTER	1	
67-L42333-0A09A	LOGO	1	
67-X22898-0E0	SPRING - KNOB	1	
74-015020-50Q	PLASTIC BAG	1	FOR CRT BD PACKING
74-015020-50Q	PLASTIC BAG	1	OR VM BD PACKING
74-060060-40F	POLYBAG ANTISTATIC (MAIN PCB)	1	
74-345900-50C	EPE BOARD (600MMX400MMX5MM)	1	
76-401980-0AC	CARTON BOX	1	
18-FG0279-JHX	RES. M.O. 2.7 OHM 2W +/-5%	1	R421
18-FG0479-JHX	RES. M.O. 4.7 OHM 2W +/-5%	1	R323
18-RF0109-JGX	RES. WIRE ROUND 1 OHM 1W +/-5%	1	R324
18-RF0109-JGX	RES. WIRE ROUND 1 OHM 1W +/-5%	1	R332
18-RG0338-JHX	RES. WIRE ROUND 0.33 OHM 2W +/-5%	1	R403
18-RH0228-JLX	RES. WIRE ROUND 0.22 OHM 3W +/-5%	1	R402
25-264610-M1X	CAP. ELEC 4.7UF 50V +/-20% NP	1	C414A
27-AHR224-JSX	CAP. M.PP 0.22 UF 400V +/-5%	1	C416
27-ALR103-JHX	CAP. M.PP 0.01 UF 1.6KV +/-5%	1	C401
27-ALR123-JHX	CAP 0.012UF 1.6KV +/-5%	1	C404
27-ALR222-JHX	CAP M.PP 2200 PF 1.6KV +/-5%	1	C403
27-ALR682-JHX	CAP. M.PP 6800 PF 1.6KV +/-5%	1	C402
36-LIN100-XX3	COIL LINEARITY 10 UH	1	L401
36-WID201-XX3	COIL WIDTH 200 UH	1	L403
37-FCC002-FAA0A	FBT BSC29-0193V	1	T403
07-389FI5-NB1G	TUNER	1	TU101
10-124S15-F7X	DIODE DAMP PG124S15(10A)	1	D401
10-FMQG5F-F7X	DIODE FMQ-G5FMS	1	D402
11-630MFP-0AX	TRANSISTOR IRF630MFP	1	Q406
11-D1273A-PAX	TRANSISTOR 2SD1273A-P	1	Q205
11-SC5422-0AX	TRANSISTOR 2SC5422	1	Q401
11-SK2201-0AX	TRANSISTOR 2SK2201	1	Q402
13-STV817-2AS	IC STV8172A	1	IC302
13-TDA749-5AS	IC TDA7495SSA	1	IC602
18-EF0109-JGX	RES. FUS. 1 OHM 1W +/-5% (LS)	1	R415
18-EG0228-JHX	RES. FUS. 0.22 OHM 2W +/-5%	1	R418
18-EG0479-JHX	TCL18-EG0479-JHX= RES. FUS. 4.7 OHM 2W +	1	J408
18-FF0100-JGX	RES. M.O. 10 OHM 1W +/-5%	1	R018
18-FG0153-JHX	RES. M.O. 15K OHM 2W +/-5%	1	R404
18-FG0479-JHX	RES. M.O. 4.7 OHM 2W +/-5%	1	R429
18-FH0159-JLX	RES. M.F. 1.5 OHM 3W +/-5%	1	R931
18-FH0159-JLX	RES. M.F. 1.5 OHM 3W +/-5%	1	R929
18-FH0220-JLX	RES. M.O. 22 OHM 3W +/-5%	1	R221
18-FH0229-JLX	RES. M.O. 2.2 OHM 3W +/-5%	1	R930
18-FH0332-JLX	RES. M.O. 3.3K OHM 3W +/-5%	1	R629A

18-RF0228-JGX	RES. WIRE ROUND 0.22 OHM 1 W +/-5%	1	R416
18-RG0228-JHX	RES. WIRE ROUND 0.22 OHM 2W +/-5%	1	R220
18-RH0109-JLX	RES. WIRE ROUND 1 OHM 3W +/-5	1	R661
25-BCG472-M1X	CAP ELEC 4700UF 16V +/-20%BULK	1	C227
25-BDA102-M1X	CAP. ELEC 1000 UF 25V +/-20%	1	C649
25-BDA102-M1X	CAP. ELEC 1000 UF 25V +/-20%	1	C648
25-BDA102-M1X	CAP. ELEC 1000 UF 25V +/-20%	1	C321
25-BDA471-M1X	CAP. ELEC 470 UF 25V +/-20%	1	C322
25-BEA471-M1X	CAP. ELEC 470 UF 35V +/-20%	1	C652
25-BEG222-M1X	CAP. ELEC 2200 UF 35V +/-20%	1	C646
25-BEG222-M1X	CAP. ELEC 2200 UF 35V +/-20%	1	C422
25-BEG222-M1X	CAP. ELEC 2200 UF 35V +/-20%	1	C419
25-BMG220-M1X	CAP. ELEC 22UF 400V +/-20%	1	C424
25-GKG101-M1X	CAP. ELEC 100 UF 200V +/-20%	1	C428
26-AKL472-KRX	CAP. CER 4700 PF 1KV +/-10%	1	C407
26-AKM102-KRX	CAP. CER 1 NF 1KV +/-10%	1	C415
26-AMM681-KRX	CAP. CER 680 PF 2KV +/-10% R	1	C406
27-MHW104-K0X	CAP. M.P.E 0.1 UF 400V +/-10%	1	C425
35-139730-00X	FERR. BEAD BF60	1	FOR Q401 C
35-FB0928-00X	MAGNETISM RING	1	FOR P909
36-HDR012-XX0	TRANSFORMER HORIZ DRIVE BCT-2504	1	T401
46-12866W-02XG	PIN BASE *2 S11-02Y	1	S601
46-30615H-04XG	HS 4P24 460 F/W TJC3-4Y/SCN-4	1	P402
46-33079W-02XG	PIN BASE *2 TJC3-2A	1	S002
46-33079W-02XG	PIN BASE *2 TJC3-2A	1	S602
46-33079W-03XG	PIN BASE *3 TJC3-3A	1	S001A
46-33079W-03XG	PIN BASE *3 TJC3-3A	1	S701
46-33079W-04XG	PIN BASE *4 TJC3-4A	1	S001
46-33079W-04XG	PIN BASE *4 TJC3-4A	1	P001
46-33079W-09XG	PIN BASE *9 TJC3-9A	1	P910
46-35198W-40XG	PIN BASE (*2X20 2.54MM)	1	S201
46-35198W-40XG	PIN BASE (*2X20 2.54MM)	1	S202
46-39402W-04XG	BASE	1	P401
46-CD015T-06G02G	HS 6P 1185#26 150MM TJC3-6Y/SCN-6Y	1	P909
47-RCA013-XX1G	RCA SOCKET 3PV/2MH Y/W/R	1	P905
47-RCA013-XX1G	RCA SOCKET 3PV/2MH Y/W/R	1	P906
47-RCA029-XX0G	RCA SOCKET (G/B/R)	1	P903
47-RCA029-XX0G	RCA SOCKET (G/B/R)	1	P901
47-RCA030-XX2G	RCA SOCKET (WHITE/RED)	1	P902
54-407800-0U0	MICA SHEET (30*35*0.25)	1	FOR Q401
51-DC0220-0CN04G	POWER CORD TCL-CB-189-A00	1	
10-0EU2YX-FBX	DIODE EU2YX (FAST RECOVERY)	1	D871
10-0RU4YX-F0X	DIODE GRU4YX (FAST RECOVERY)	1	D881
10-D3SB60-H7X	DIODE SHD-D3SB60-7109	1	DB801
10-GRU3ZX-FBX	TCL10-GRU3ZX-FBX= DIODE GRU3ZX R=N	1	D861
10-RU4AMS-F0X	DIODE RU4AMS	1	D841
11-2SB772-PAX	TRANSISTOR 2SB772-P(PNP)	1	Q844
13-0HPC92-2CP	PHOTO COUPLER HPC922-C	1	IC802
13-0L7805-CVS	+5V 1.5A IC L7805CV	1	IC846
13-0L7808-CVS	IC L7808CV(+8V.1.5A)	1	IC847
13-0L7812-CVS	IC L7812C-V	1	IC845
13-5Q1265-RFS	IC KA5Q1265RF-YDTU	1	IC801
18-DF0224-JGX1	METAL FILM FIXED RESISTOR 1WS 220KΩ	1	R851
18-FF0683-JGX	RES. M.O. 68K OHM 1W +/-5%	1	R809A
18-FF0683-JGX	RES. M.O. 68K OHM 1W +/-5%	1	R809
18-FG0223-JHX	RES. M.O. 22K OHM 2W +/-5%	1	R839

18-FH0120-JLX	RES. M.O. 12 OHM 3W +/-5%	1	R847
18-FH0153-JLX	RES. M.O. 15K OHM 3W +/-5%	1	R891A
18-KF0825-JHX	RES. GLASS GLAZE 8.2M OHM 1W	1	R891
20-TR102H-5CX	TCL20-TR102H-5CX= TRIMMER B1K HORIZ TYPE	1	VR801
22-NTC479-XX0	NTC 4.7 OHM +/-18% NTC4.7D2-14	1	RT802
22-PTC200-XX1	PTC 20 OHM +/-20%	1	RT801
25-BCA222-M1X	CAP. ELEC 2200 UF 16V +/-20%	1	C875
25-BDA102-M1X	CAP. ELEC 1000 UF 25V +/-20%	1	C883
25-BDA222-M1X	CAP. ELEC 2200 UF 25V +/-20%	1	C873
25-BFG222-M1X	CAP. ELEC 2200UF 50V +/-20%	1	C863
25-BNJ221-M1X	CAP. ELEC 220 UF 450V +/-20%	1	C806
25-GKG221-M1X	CAP. ELEC 200V/220UF/+/-20%	1	C842
26-AIL103-KBX	CAP.CER 10NF 500V +/-10%	1	C843
26-AIL103-KBX	CAP.CER 10NF 500V +/-10%	1	C805
26-AKL472-KRX	CAP. CER 4700 PF 1KV +/-10%	1	C850
26-AKL472-KRX	CAP. CER 4700 PF 1KV +/-10%	1	C851
26-AKM471-KRX	CAP. CER 470 PF 1KV +/-5% SL	1	C841
26-AMM471-KBX	CAP. CER 470 PF 2KV +/-10%	1	C844
26-APK222-MEX	CAP. CER 2200PF 400VAC+/-20% E	1	C891
26-APK471-KBX	CAP. CER 470PF 400VAC +/-10% B	1	C803
26-APK471-KBX	CAP. CER 470PF 400VAC +/-10% B	1	C804
27-ALQ222-J0X	TCL27-ALQ222-J0X= CAP. M.PP 2200 PF 1.6K	1	C815
27-AQT224-MV3	CAP.M.PP 0.22UF 250VAC	1	C801
27-AQT224-MV3	CAP.M.PP 0.22UF 250VAC	1	C802
27-MHW104-K0X	CAP. M.P.E 0.1 UF 400V +/-10%	1	C802A
34-A608K6-1BX	COIL CHOKE 0.6 UH +/-10%	1	L816
34-R101K2-1BX	COIL CHOKE 100 UH +/-10%	1	L845
34-R101K2-1BX	COIL CHOKE 100 UH +/-10%	1	L883
35-237250-00X	FERR. BEAD HF70 4.5X5.0	1	L883(FOR D881)
35-237250-00X	FERR. BEAD HF70 4.5X5.0	1	L882(FOR D881)
35-237250-00X	FERR. BEAD HF70 4.5X5.0	1	L842(FOR D841)
35-237250-00X	FERR. BEAD HF70 4.5X5.0	1	L866(FOR D871)
35-237250-00X	FERR. BEAD HF70 4.5X5.0	1	L865(FOR D871)
35-237250-00X	FERR. BEAD HF70 4.5X5.0	1	L841(FOR D841)
35-237250-00X	FERR. BEAD HF70 4.5X5.0	1	L863(FOR D861)
35-237250-00X	FERR. BEAD HF70 4.5X5.0	1	L864(FOR D861)
36-LIF002-AX0	LINE FILTER 20MH	1	T802A
36-LIF002-AX0	LINE FILTER 20MH	1	T801
36-LIF087-XX0	LINE FILTER LGH12V-40UH	1	T800
36-TRF152-AX2	TRANSFORMER CONV.BCK-4921B	1	T803
43-TSS112-DMX	RELAY POWER SMIT-SS-112DM 12V	1	RL801
46-10962W-02XG	PIN BASE *2 TJC2-2A	1	S802
46-35184W-02XG	PIN BASE *2 TJC1-2A	1	S801
50-05000D-1GSG	FUSE 5A 250VAC 5MMX20MM	1	F801
66-20516X-0B0	FUSE HOLDER	2	FOR F801
67-H27292-1A0	HEAT SINK	1	FOR IC846
67-H27292-1A0	HEAT SINK	1	FOR IC845
67-H27292-5A0	HEAT SINK	1	FOR IC847
67-H38012-3A0	HEAT SINK	1	FOR IC801
11-SA1837-0AX	TRANSISTOR 2SA1837	1	Q1111
11-SC4793-0AX	STANSISTOR 2SC4793	1	Q1112
18-FF0121-JGX	RES. M.O. 120 OHM 1W +/-5%	1	R1131
18-FF0181-JGX	TCL18-FF0181-JGX= RES. M.O. 180 OHM 1W +	1	R1143
25-BJA100-M1X	CAP. ELEC 10 UF 160V +/-20%	1	C1113
25-BJA100-M1X	CAP. ELEC 10 UF 160V +/-20%	1	C1120
26-ABC101-JZX	CAP. CER 100 PF 50V +/-5% SL	1	C1116

26-ABC101-JZX	CAP. CER 100 PF 50V +/-5% SL	1	C1114
26-AIC472-KBX	TCL26-AIC472-KBX= CAP. CER 4700 PF 500V	1	C1117
46-29272H-06XG	HS 6P 2468#24 275 TJC3-6Y/SCN-6Y	1	FOR XP1703 TO CRT BD P503
46-33079W-03XG	PIN BASE *3 TJC3-3A	1	XP1104
67-H34464-1A0	HEAT SINK (H=40MM)	1	FOR Q1111
67-H34464-1A0	HEAT SINK (H=40MM)	1	FOR Q1112
18-FG0129-JHX	TCL18-FG0129-JHX= RES. M.O. 1.2 OHM 2W +	1	R533
47-CRT013-XX0G	CRT SOCKET GZS10-2-AC2ER	1	S501A
11-SC1815-YBX	TRANSISTOR 2SC1815-Y (NPN)	1	Q1301
14-LED05B-XX1	LED FB205(BLUE)	1	D1301
35-FB0718-00X	FERR. BEAD ZCAT1518-0730	1	FOR P1003 TO S001
46-33079W-03XG	PIN BASE *3 TJC3-3A	1	P1301
46-35063W-03XG	PIN BASE *3 VH-3A	1	S801
46-35063W-03XG	PIN BASE *3 VH-3A	1	S802
46-39318H-02XG	HS 2P 1617#22 300 TJC-1-26/VH-3Y	1	S802(SWITCH BD) TO S801(MAIN BD)
48-POW001-XX0G	POWER SWITCH KDC-A11	1	SW801
62-226920-0HA	LED HOLDER ABS-LG H121 (HB)	1	FOR D1301
11-SA1091-0BX	TRANSISTOR 2SA1091 (PNP)	1	Q505
13-LM2451-TBS	IC LM2451TB	1	U501
18-FF0101-JGX	RES. M.O. 100 OHM 1W +/-5%	1	R534
25-BCB470-M1X	CAP. ELEC 47 UF 16V +/-20%	1	C512
25-BLA100-M1X	CAP. ELEC 10 UF 250V +/-20%	1	C518
25-BLA220-M1X	CAP. ELEC 22 UF 250V +/-20%	1	C517
25-BLA220-M1X	CAP. ELEC 22 UF 250V +/-20%	1	C507
25-BLA220-M1X	CAP. ELEC 22 UF 250V +/-20%	1	C509
26-AML222-KBX	CAP.CER 2200PF 2KV +/-10%	1	C516
26-AML222-KBX	CAP.CER 2200PF 2KV +/-10%	1	C519
27-MGC104-J0X	CAP.M.PP 250V 0.1UF +/-5%	1	C515
27-MGC104-J0X	CAP.M.PP 250V 0.1UF +/-5%	1	C514
27-MGC104-J0X	CAP.M.PP 250V 0.1UF +/-5%	1	C513
27-MGC104-J0X	CAP.M.PP 250V 0.1UF +/-5%	1	C508
35-FB0928-00X	MAGNETISM RING	1	FOR S503
35-LB1005-00X	FERR BEAD LB3.5X1X5	1	L506
35-LB1005-00X	FERR BEAD LB3.5X1X5	1	L504
46-33079W-06XG	PIN BASE *6 TJC3-6A	1	P501
46-35179W-04XG	PIN BASE TJC3-4A	1	P503
46-35184W-02XG	PIN BASE *2 TJC1-2A	1	P502
46-39444H-13XG	HS 13P 1007#24/1185#26 350MM/450MM	1	S503
57-10654X-00F	TWIST TIE NY66	2	FOR S503
02-IRR001-XX0	IR RECEIVER MODULE HS0038A2	1	IR1001
46-27626W-02XG	PIN BASE *2 TJC3-2A (HORIZ)	1	P1005
46-37066H-03XG	HS 3P 2468#24 450 TJC3-3Y/JC25-3Y	1	P1002（TO MAINBOARD）
46-39220H-04XG	HS 4P 2468#24 500MM TJC3-4Y/JC25-4Y	1	P1003 （TO S001）
46-39249H-03XG	HS 3P 2468#24 280 TJC3-3Y/JC25-3Y	1	P1004（TO SW.BOARD)
46-39626W-07XG	CONNECTOR	1	P1001
57-10654X-00F	TWIST TIE NY66	1	FOR P1003
36-LIF012-XX0	LINE FILTER LCL4.5-1	1	L1201
36-LIF012-XX0	LINE FILTER LCL4.5-1	1	L1202
40-29V88P-SIA1XG	P.C.B SIDE AV BD	1	
46-39431H-09XG	HS 9P 1185#26/2547#24 600MM TJC3-9Y	1	P1206
47-RCA139-XX0G	JACK RCA RCA317	1	P1211
47-SVI001-XX0	TCL47-SVI001-XX0= SOCKET R=N	1	P1402
18-CB0242-JNX	RES. C.F. 2.4K OHM 1/6W +/-5%	1	R426A
18-CB0363-JNX	RES. C.F. 36K OHM 1/6W +/-5%	1	R431A

18-CB0472-JNX	CARBON RES. C.F. 4.7K OHM 1/6W +/-5%	1	R426
18-CB0683-JNX	RES. C.F. 68K OHM 1/6W +/-5%	1	R430A
18-CE0220-JNX	RES. C.F. 22 OHM 1/2W +/-5%	1	R401
18-CE0271-JNX	TCL18-CE0271-JNX= RES. C.F. 270 OHM 1/2W	1	R331
18-CE0271-JNX	TCL18-CE0271-JNX= RES. C.F. 270 OHM 1/2W	1	R436
10-0FR104-FBX	DIODE FR104 (FAST RECTIFIER)	1	D410
10-0FR104-FBX	DIODE FR104 (FAST RECTIFIER)	1	D407
10-0FR104-FBX	DIODE FR104 (FAST RECTIFIER)	1	D408
10-0FR104-FBX	DIODE FR104 (FAST RECTIFIER)	1	D409
10-1N4001-EBX	DIODE 1N4001 (RECTIFIER)	1	D413
10-1N4148-ABX	DIODE 1N4148 (SWITCHING)	1	D406
10-1N4148-ABX	DIODE 1N4148 (SWITCHING)	1	D305
10-1N4148-ABX	DIODE 1N4148 (SWITCHING)	1	D211
10-1N4148-ABX	DIODE 1N4148 (SWITCHING)	1	D207
10-1N4148-ABX	DIODE 1N4148 (SWITCHING)	1	D607
10-1N4148-ABX	DIODE 1N4148 (SWITCHING)	1	D606
10-1N4148-ABX	DIODE 1N4148 (SWITCHING)	1	D412
10-1N4148-ABX	DIODE 1N4148 (SWITCHING)	1	D603
10-1N4148-ABX	DIODE 1N4148 (SWITCHING)	1	D604
10-79C4V7-DBX	TCL10-79C4V7-DBX= DIODE ZENER 4V7 1/2W 5	1	D608
10-79C5V1-DBX	DIODE ZENER 5V1 1/2W 5%	1	D609
10-79C5V1-DBX	DIODE ZENER 5V1 1/2W 5%	1	D208
10-79C6V8-DBX	DIODE ZENER BZX79-C6V8 133	1	D206
10-79C9V1-DBX	DIODE ZENER 9V1 1/2W 5%	1	ZD400A
10-HER108-FBX	DIODE HER108	1	D205
10-HS12VC-DBX	DIODE 500MW 12HSC	1	D403
10-N4003G-EBX	DIODE 1N4003G	1	D304
10-N4003G-EBX	DIODE 1N4003G	1	D404
10-N4003G-EBX	DIODE 1N4003G	1	D405
11-0BC637-0BX	TRANSISTOR BC637	1	Q011
11-0BC637-0BX	TRANSISTOR BC637	1	Q009
11-0BC638-0BX	TRANSISTOR BC638	1	Q008
11-0BC638-0BX	TRANSISTOR BC638	1	Q010
11-SA1015-YBX	TRANSISTOR ST2SA1015Y (PNP)	1	Q404A
11-SA1015-YBX	TRANSISTOR ST2SA1015Y (PNP)	1	Q601
11-SA1015-YBX	TRANSISTOR ST2SA1015Y (PNP)	1	Q202
11-SC1815-YBX	TRANSISTOR 2SC1815-Y (NPN)	1	Q007
11-SC1815-YBX	TRANSISTOR 2SC1815-Y (NPN)	1	Q404
11-SC1815-YBX	TRANSISTOR 2SC1815-Y (NPN)	1	Q604
11-SC1815-YBX	TRANSISTOR 2SC1815-Y (NPN)	1	Q204
11-SC1815-YBX	TRANSISTOR 2SC1815-Y (NPN)	1	Q301
11-SC1815-YBX	TRANSISTOR 2SC1815-Y (NPN)	1	Q006
11-SC3779-DBX	TRANSISTOR 2SC3779D (RF AMPL)	1	Q101
18-CB0101-JNX	RES. C.F. 100 OHM 1/6W +/-5%	1	R104
18-CB0101-JNX	RES. C.F. 100 OHM 1/6W +/-5%	1	R102
18-CB0102-JNX	RES. C.F. 1K OHM 1/6W +/-5%	1	R432
18-CB0102-JNX	RES. C.F. 1K OHM 1/6W +/-5%	1	R950
18-CB0102-JNX	RES. C.F. 1K OHM 1/6W +/-5%	1	R951
18-CB0102-JNX	RES. C.F. 1K OHM 1/6W +/-5%	1	R954
18-CB0102-JNX	RES. C.F. 1K OHM 1/6W +/-5%	1	R955
18-CB0102-JNX	RES. C.F. 1K OHM 1/6W +/-5%	1	R958
18-CB0102-JNX	RES. C.F. 1K OHM 1/6W +/-5%	1	R938
18-CB0102-JNX	RES. C.F. 1K OHM 1/6W +/-5%	1	R615
18-CB0102-JNX	RES. C.F. 1K OHM 1/6W +/-5%	1	R934
18-CB0102-JNX	RES. C.F. 1K OHM 1/6W +/-5%	1	R016
18-CB0102-JNX	RES. C.F. 1K OHM 1/6W +/-5%	1	R106

18-CB0102-JNX	RES. C.F. 1K OHM 1/6W +/-5%	1	R419
18-CB0102-JNX	RES. C.F. 1K OHM 1/6W +/-5%	1	R959
18-CB0103-JNX	RES. C.F. 10K OHM 1/6W +/-5%	1	R957
18-CB0103-JNX	RES. C.F. 10K OHM 1/6W +/-5%	1	R901
18-CB0103-JNX	RES. C.F. 10K OHM 1/6W +/-5%	1	R932
18-CB0103-JNX	RES. C.F. 10K OHM 1/6W +/-5%	1	R956
18-CB0103-JNX	RES. C.F. 10K OHM 1/6W +/-5%	1	R953
18-CB0103-JNX	RES. C.F. 10K OHM 1/6W +/-5%	1	R337
18-CB0103-JNX	RES. C.F. 10K OHM 1/6W +/-5%	1	R210
18-CB0103-JNX	RES. C.F. 10K OHM 1/6W +/-5%	1	R933
18-CB0103-JNX	RES. C.F. 10K OHM 1/6W +/-5%	1	R952
18-CB0103-JNX	RES. C.F. 10K OHM 1/6W +/-5%	1	R613
18-CB0103-JNX	RES. C.F. 10K OHM 1/6W +/-5%	1	R013
18-CB0103-JNX	RES. C.F. 10K OHM 1/6W +/-5%	1	R101A
18-CB0104-JNX	RES. C.F. 100K OHM 1/6W +/-5%	1	R614
18-CB0104-JNX	RES. C.F. 100K OHM 1/6W +/-5%	1	R612
18-CB0104-JNX	RES. C.F. 100K OHM 1/6W +/-5%	1	R441A
18-CB0104-JNX	RES. C.F. 100K OHM 1/6W +/-5%	1	R203
18-CB0121-JNX	RES. C.F. 120 OHM 1/6W +/-5%	1	R107
18-CB0122-JNX	RES. C.F. 1.2K OHM 1/6W +/-5%	1	R208
18-CB0122-JNX	RES. C.F. 1.2K OHM 1/6W +/-5%	1	R012
18-CB0151-JNX	RES. C.F. 150 OHM 1/6W +/-5%	1	R109
18-CB0222-JNX	RES. C.F. 2.2K OHM 1/6W +/-5%	1	R621
18-CB0222-JNX	RES. C.F. 2.2K OHM 1/6W +/-5%	1	R619
18-CB0223-JNX	RES. C.F. 22K OHM 1/6W +/-5%	1	R328
18-CB0223-JNX	RES. C.F. 22K OHM 1/6W +/-5%	1	R327
18-CB0271-JNX	RES. C.F. 270 OHM 1/6W +/-5%	1	R405
18-CB0272-JNX	RES. C.F. 2.7K OHM 1/6W +/-5%	1	R422
18-CB0362-JNX	RES. C.F. 3.6K OHM 1/6W +/-5%	1	R209
18-CB0392-JNX	RES. C.F. 3.9K OHM 1/6W +/-5%	1	R427
18-CB0393-JNX	RES. C.F. 39K OHM 1/6W +/-5%	1	R423
18-CB0432-JNX	RES. C.F. 4.3K OHM 1/6W +/-5%	1	R427A
18-CB0471-JNX	RES. C.F. 470 OHM 1/6W +/-5%	1	R015
18-CB0471-JNX	RES. C.F. 470 OHM 1/6W +/-5%	1	R017
18-CB0471-JNX	RES. C.F. 470 OHM 1/6W +/-5%	1	R108
18-CB0471-JNX	RES. C.F. 470 OHM 1/6W +/-5%	1	R617
18-CB0471-JNX	RES. C.F. 470 OHM 1/6W +/-5%	1	R222
18-CB0472-JNX	CARBON RES. C.F. 4.7K OHM 1/6W +/-5%	1	R204
18-CB0472-JNX	CARBON RES. C.F. 4.7K OHM 1/6W +/-5%	1	R411
18-CB0513-JNX	TCL18-CB0513-JNX= RES. C.F. 51K OHM 1/6W	1	R440A
18-CB0560-JNX	RES. C.F. 56 OHM 1/6W +/-5%	1	R105
18-CB0682-JNX	RES. C.F. 6.8K OHM 1/6W +/-5%	1	R202
18-CB0822-JNX	RES. C.F. 8.2K OHM 1/6W +/-5%	1	R620
18-CB0822-JNX	RES. C.F. 8.2K OHM 1/6W +/-5%	1	R622
18-CD0103-JNX	RES. C.F. 10K OHM 1/4W +/-5%	1	R649A
18-CD0103-JNX	RES. C.F. 10K OHM 1/4W +/-5%	1	R648A
18-CD0103-JNX	RES. C.F. 10K OHM 1/4W +/-5%	1	R407
18-CD0229-JNX	TCL18-CD0229-JNX= RES. C.F. 2.2 OHM 1/4W	1	R333
18-CD0270-JNX	RES. C.F. 27 OHM 1/4W +/-5%	1	R406
18-CD0272-JNX	RES. C.F. 2.7K OHM 1/4W +/-5%	1	R330
18-CD0821-JNX	RES. C.F. 820 OHM 1/4W +/-5%	1	R014
18-CE0104-JNX	RES. C.F. 100K OHM 1/2W +/-5%	1	R420
18-DB0102-FNX	RES. M.F. 1K OHM 1/6W +/-1%	1	R329
18-DB0102-FNX	RES. M.F. 1K OHM 1/6W +/-1%	1	R326
18-DB0272-FNX	RES. M.F. 2.7K OHM 1/6W +/-1%	1	R334
25-BCB100-M1X	CAP. ELEC 10 UF 16V +/-20%	1	C954

25-BCB100-M1X	CAP. ELEC 10 UF 16V +/-20%	1	C953
25-BCB100-M1X	CAP. ELEC 10 UF 16V +/-20%	1	C952
25-BCB100-M1X	CAP. ELEC 10 UF 16V +/-20%	1	C933
25-BCB100-M1X	CAP. ELEC 10 UF 16V +/-20%	1	C932
25-BCB100-M1X	CAP. ELEC 10 UF 16V +/-20%	1	C009
25-BCB100-M1X	CAP. ELEC 10 UF 16V +/-20%	1	C955
25-BCB100-M1X	CAP. ELEC 10 UF 16V +/-20%	1	C104
25-BCB100-M1X	CAP. ELEC 10 UF 16V +/-20%	1	C628
25-BCB100-M1X	CAP. ELEC 10 UF 16V +/-20%	1	C640
25-BCB100-M1X	CAP. ELEC 10 UF 16V +/-20%	1	C913
25-BCB100-M1X	CAP. ELEC 10 UF 16V +/-20%	1	C912
25-BCB471-M1X	CAP. ELEC 470 UF 16V +/-20%	1	C914
25-BCB471-M1X	CAP. ELEC 470 UF 16V +/-20%	1	C224
25-BCB471-M1X	CAP. ELEC 470 UF 16V +/-20%	1	C202
25-BDB100-M1X	TCL25-BDB100-M1X= CAP. ELEC 10 UF 25V +/	1	C325
25-BDB101-M1X	CAP. ELEC 100 UF 25V +/-20%	1	C634
25-BDB221-M1X	CAP. ELEC 220UF 25V +/-20%	1	C635
25-BEB101-M1X	CAP. ELEC 100 UF 35V +/-20%	1	C323
25-BFB101-M1X	CAP. ELEC 100 UF 50V +/-20%	1	C430
25-BFB108-M1X	CAP. ELEC 0.1 UF 50V +/-20%	1	C411
25-BFB109-M1X	CAP. ELEC 1 UF 50V +/-20%	1	C005
25-BFB109-M1X	CAP. ELEC 1 UF 50V +/-20%	1	C007
25-BFB109-M1X	CAP. ELEC 1 UF 50V +/-20%	1	C101
25-BFB220-M1X	CAP. ELEC 22 UF 50V +/-20%	1	C203
25-BFB229-M1X	CAP. ELEC 2.2 UF 50V +/-20%	1	C008
25-BFB478-M1X	CAP. ELEC 0.47 UF 50V +/-20%	1	C636
25-BFB479-M1X	CAP. ELEC 4.7 UF 50V +/-20%	1	C006
26-ABC104-ZFX	CAP. CER 0.1 UF 50V +80-20% F	1	C228
26-ABC104-ZFX	CAP. CER 0.1 UF 50V +80-20% F	1	C229
26-ABC104-ZFX	CAP. CER 0.1 UF 50V +80-20% F	1	C431
26-AIC471-KBX	CAP. CER 470 PF 500V +/-10%	1	C423
26-AIC471-KBX	CAP. CER 470 PF 500V +/-10%	1	C418
26-AIC471-KBX	CAP. CER 470 PF 500V +/-10%	1	C420
26-EBP101-JCS	CAP. CER 100 PF 50V +/-5%	1	C429
26-EBP101-JCS	CAP. CER 100 PF 50V +/-5%	1	C110
26-EBP101-JCS	CAP. CER 100 PF 50V +/-5%	1	C109
26-EBP101-JCS	CAP. CER 100 PF 50V +/-5%	1	C329
26-EBP101-JCS	CAP. CER 100 PF 50V +/-5%	1	C330
26-EBP103-ZFS	CAP.CER 10NF 50V +80% -20%	1	C108
26-EBP103-ZFS	CAP.CER 10NF 50V +80% -20%	1	C112
26-EBP103-ZFS	CAP.CER 10NF 50V +80% -20%	1	C105
26-EBP103-ZFS	CAP.CER 10NF 50V +80% -20%	1	C103
26-EBP103-ZFS	CAP.CER 10NF 50V +80% -20%	1	C107
26-EBP104-ZFS	CAP. CER 0.1UF 50V +80%/-20%	1	C421
26-EBP104-ZFS	CAP. CER 0.1UF 50V +80%/-20%	1	C226
26-EBP104-ZFS	CAP. CER 0.1UF 50V +80%/-20%	1	C020A
26-EBP104-ZFS	CAP. CER 0.1UF 50V +80%/-20%	1	C111
26-EBP104-ZFS	CAP. CER 0.1UF 50V +80%/-20%	1	C225
26-EBP152-KBS	CAP. CER 1500PF 50V +/-10%	1	C326
26-EBP472-KBS	CAP. CER 4700PF 50V +/-10%	1	C410
26-EBP561-JCS	CAP. CEP 560PF 50V +/-5%	1	C409
27-MBC103-J0X	CAP. M.P.E 0.01UF 63V+/-5%	1	C324
27-MBC103-J0X	CAP. M.P.E 0.01UF 63V+/-5%	1	C641
27-MBC103-J0X	CAP. M.P.E 0.01UF 63V+/-5%	1	C327
27-MBC103-J0X	CAP. M.P.E 0.01UF 63V+/-5%	1	C643
27-MBC104-J0X	CAP. M.P.E 0.1 UF 63V +/-5%	1	C645

27-MBC224-J0X	CAP. M.P.E 0.22UF 63V +/-5%	1	C328
27-MBC474-J0X	CAP. M.P.E 0.47UF 63V +/-5%	1	C644
27-MBC474-J0X	CAP. M.P.E 0.47UF 63V +/-5%	1	C642
34-A109K0-1IX	COIL CHOKE 1 UH +/-10%	1	L103
34-A109K0-1IX	COIL CHOKE 1 UH +/-10%	1	L102
34-A470K0-1IX	COIL CHOKE 47 UH +/-10%	1	L101
35-339740-00X	FERR. BEAD LB3.5X6	1	J004A
35-339740-00X	FERR. BEAD LB3.5X6	1	J922
35-339740-00X	FERR. BEAD LB3.5X6	1	J924A
35-LB1005-0IX	FERR BEAD H75 (3.5X1X5)	1	J105
35-LB1005-0IX	FERR BEAD H75 (3.5X1X5)	1	L001
35-LB1005-0IX	FERR BEAD H75 (3.5X1X5)	1	L002
40-MS21EM-MAE1XG	P.C.B MAIN BD	1	
66-343730-0B0	HOLLOW RIVET 1.6MMX3.0MMX3.2MM	2	FOR L403
66-343730-0B0	HOLLOW RIVET 1.6MMX3.0MMX3.2MM	1	FOR Q401 C
66-343730-0B0	HOLLOW RIVET 1.6MMX3.0MMX3.2MM	2	FOR C403
66-343730-0B0	HOLLOW RIVET 1.6MMX3.0MMX3.2MM	2	FOR C404
66-343730-0B0	HOLLOW RIVET 1.6MMX3.0MMX3.2MM	4	FOR T403 1,3,6,9
66-343730-0B0	HOLLOW RIVET 1.6MMX3.0MMX3.2MM	2	FOR C402
66-343730-0B0	HOLLOW RIVET 1.6MMX3.0MMX3.2MM	2	FOR C401
66-343730-0B0	HOLLOW RIVET 1.6MMX3.0MMX3.2MM	2	FOR L401
66-343740-0B0	HOLLOW RIVET (2.3MMX4.0MMX3.5MM)	4	FOR P401
66-343740-0B0	HOLLOW RIVET (2.3MMX4.0MMX3.5MM)	3	FOR IC302
71-270870-0A9	LABEL	1	
18-CB0102-JNX	RES. C.F. 1K OHM 1/6W +/-5%	1	R1307
18-CB0103-JNX	RES. C.F. 10K OHM 1/6W +/-5%	1	R1306
26-EBP104-ZFS	CAP. CER 0.1UF 50V +80%/-20%	1	C1303
40-BV88MS-SWC1XG	P.C.B SWITCH BD	1	
10-0BAV21-ABX	DIODE BAV21 (SW)	1	D507
10-0BAV21-ABX	DIODE BAV21 (SW)	1	D508
10-0BAV21-ABX	DIODE BAV21 (SW)	1	D512
10-0BAV21-ABX	DIODE BAV21 (SW)	1	D511
10-0BAV21-ABX	DIODE BAV21 (SW)	1	D510
10-0BAV21-ABX	DIODE BAV21 (SW)	1	D509
10-0FR104-FBX	DIODE FR104 (FAST RECTIFIER)	1	D513
10-0FR104-FBX	DIODE FR104 (FAST RECTIFIER)	1	D506
10-1N4148-ABX	DIODE 1N4148 (SWITCHING)	1	D505
10-79C7V5-DBX	TCL10-79C7V5-DBX= DIODE ZENER 7V5 1/2W 5	1	R523
18-BE0561-KNX	RES. C.C. 560 OHM 1/2W +/-10%	1	R516
18-BE0561-KNX	RES. C.C. 560 OHM 1/2W +/-10%	1	R517
18-BE0561-KNX	RES. C.C. 560 OHM 1/2W +/-10%	1	R518
18-CB0101-JNX	RES. C.F. 100 OHM 1/6W +/-5%	1	R524
18-CB0102-JNX	RES. C.F. 1K OHM 1/6W +/-5%	1	R510
18-CB0103-JNX	RES. C.F. 10K OHM 1/6W +/-5%	1	R520
18-CB0106-JNX	RES. C.F. 10M OHM 1/6W +/-5%	1	R530
18-CB0203-JNX	TCL18-CB0203-JNX= RES. C.F. 20K OHM 1/6W	1	R526
18-CB0473-JNX	RES. C.F. 47K OHM 1/6W +/-5%	1	R525
18-CB0563-JNX	RES. C.F. 56K OHM 1/6W +/-5%	1	R531
18-CD0152-JNX	RES. C.F. 1.5K OHM 1/4W +/-5%	1	R532
18-CD0334-JNX	RES. C.F. 330K OHM 1/4W +/-5%	1	R527
18-CD0334-JNX	RES. C.F. 330K OHM 1/4W +/-5%	1	R528
18-CD0561-JNX	RES. C.F. 560 OHM 1/4W +/-5%	1	R513
18-CD0561-JNX	RES. C.F. 560 OHM 1/4W +/-5%	1	R515
18-CD0561-JNX	RES. C.F. 560 OHM 1/4W +/-5%	1	R514
26-EBP100-JCS	TCL26-EBP100-JCS= CAP. CER 10 PF 50V +/-	1	C521
26-EBP104-ZFS	CAP. CER 0.1UF 50V +80%/-20%	1	C510

34-A569J2-1IX	COIL SPT0203A-5R6J	1	L503
34-A569J2-1IX	COIL SPT0203A-5R6J	1	L501
34-A569J2-1IX	COIL SPT0203A-5R6J	1	L502
40-BV88MS-CRB1XG	TV PCB CRT BD(40-BV88MS-CRB1XG) 00 R=Y	1	
11-SC1815-YBX	TRANSISTOR 2SC1815-Y (NPN)	1	Q1024
11-SC1815-YBX	TRANSISTOR 2SC1815-Y (NPN)	1	Q1028
11-SC1815-YBX	TRANSISTOR 2SC1815-Y (NPN)	1	Q1027
11-SC1815-YBX	TRANSISTOR 2SC1815-Y (NPN)	1	Q1023
11-SC1815-YBX	TRANSISTOR 2SC1815-Y (NPN)	1	Q1026
11-SC1815-YBX	TRANSISTOR 2SC1815-Y (NPN)	1	Q1022
11-SC1815-YBX	TRANSISTOR 2SC1815-Y (NPN)	1	Q1025
18-CB0101-JNX	RES. C.F. 100 OHM 1/6W +/-5%	1	R1042
18-CB0102-JNX	RES. C.F. 1K OHM 1/6W +/-5%	1	R1021
18-CB0102-JNX	RES. C.F. 1K OHM 1/6W +/-5%	1	R1025
18-CB0103-JNX	RES. C.F. 10K OHM 1/6W +/-5%	1	R1043
18-CB0103-JNX	RES. C.F. 10K OHM 1/6W +/-5%	1	R1036
18-CB0103-JNX	RES. C.F. 10K OHM 1/6W +/-5%	1	R1037
18-CB0103-JNX	RES. C.F. 10K OHM 1/6W +/-5%	1	R1038
18-CB0103-JNX	RES. C.F. 10K OHM 1/6W +/-5%	1	R1039
18-CB0103-JNX	RES. C.F. 10K OHM 1/6W +/-5%	1	R1040
18-CB0103-JNX	RES. C.F. 10K OHM 1/6W +/-5%	1	R1041
18-CB0152-JNX	RES. C.F. 1.5K OHM 1/6W +/-5%	1	R1024
18-CB0223-JNX	RES. C.F. 22K OHM 1/6W +/-5%	1	R1035
18-CB0223-JNX	RES. C.F. 22K OHM 1/6W +/-5%	1	R1034
18-CB0223-JNX	RES. C.F. 22K OHM 1/6W +/-5%	1	R1030
18-CB0223-JNX	RES. C.F. 22K OHM 1/6W +/-5%	1	R1033
18-CB0223-JNX	RES. C.F. 22K OHM 1/6W +/-5%	1	R1032
18-CB0223-JNX	RES. C.F. 22K OHM 1/6W +/-5%	1	R1031
18-CB0242-JNX	RES. C.F. 2.4K OHM 1/6W +/-5%	1	R1023
18-CB0332-JNX	RES. C.F. 3.3K OHM 1/6W +/-5%	1	R1022
18-CB0471-JNX	RES. C.F. 470 OHM 1/6W +/-5%	1	R1027
18-CB0681-JNX	RES. C.F. 680 OHM 1/6W +/-5%	1	R1026
25-BCB470-M1X	CAP. ELEC 47 UF 16V +/-20%	1	C1001
26-EBP104-ZFS	CAP. CER 0.1UF 50V +80%/-20%	1	C1003
26-EBP104-ZFS	CAP. CER 0.1UF 50V +80%/-20%	1	C1002
40-BV88MS-KED1XG	P.C.B KEY BD	1	
10-0FR104-FBX	DIODE FR104 (FAST RECTIFIER)	1	D804
10-1N4007-EBX	DIODE IN4007	1	D817
10-1N4148-ABX	DIODE 1N4148 (SWITCHING)	1	D812
10-1N4148-ABX	DIODE 1N4148 (SWITCHING)	1	D847
10-1N4148-ABX	DIODE 1N4148 (SWITCHING)	1	D811
10-1N4148-ABX	DIODE 1N4148 (SWITCHING)	1	D806
10-1N4148-ABX	DIODE 1N4148 (SWITCHING)	1	D805
10-79C30V-DBX	DIODE 30V +/-5% 1/2W	1	D816
10-79C33V-DBX	DIODE ZENER 33V 1/2W 5%	1	D834
10-HS4V7C-DBX	DIODE 500MW 4.7HSC	1	D814
11-C124ES-0BX	TRANSISTOR PDTC124ES (NPN)	1	Q843
11-SC1815-YBX	TRANSISTOR 2SC1815-Y (NPN)	1	Q801
11-SC1815-YBX	TRANSISTOR 2SC1815-Y (NPN)	1	Q845
13-000TL4-31T	IC TL431ACLP	1	IC841
18-CB0124-JNX	RES. C.F. 120K OHM 1/6W +/-5%	1	R846
18-CB0153-JNX	RES. C.F. 15K OHM 1/6W +/-5%	1	R811
18-CB0471-JNX	RES. C.F. 470 OHM 1/6W +/-5%	1	R842
18-CB0471-JNX	RES. C.F. 470 OHM 1/6W +/-5%	1	R805
18-CB0472-JNX	CARBON RES. C.F. 4.7K OHM 1/6W +/-5%	1	R812
18-CB0473-JNX	RES. C.F. 47K OHM 1/6W +/-5%	1	R857

18-CB0473-JNX	RES. C.F. 47K OHM 1/6W +/-5%	1	R852
18-CB0681-JNX	RES. C.F. 680 OHM 1/6W +/-5%	1	R842A
18-CB0751-JNX	RES. C.F. 750 OHM 1/6W +/-5%	1	R804
18-CD0152-JNX	RES. C.F. 1.5K OHM 1/4W +/-5%	1	R849A
18-CD0183-JNX	RES. C.F. 18K OHM 1/4W +/-5%	1	R855
18-CD0222-JNX	RES. C.F. 2.2K OHM 1/4W +/-5%	1	R849
18-CD0829-JNX	RES. C.F. 8.2 OHM 1/4W +/-5%	1	R803
18-CE0102-JNX	RES. C.F. 1K OHM 1/2W +/-5%	1	R853
18-KE0105-JNX	RES. GLASS GLAZE 1M OHM 1/2W +/-5%	1	R801
25-BCB100-M1X	CAP. ELEC 10 UF 16V +/-20%	1	C884
25-BCB331-M1X	CAP. ELEC 330 UF 16V +/-20%	1	C816
25-BCB471-M1X	CAP. ELEC 470 UF 16V +/-20%	1	C859
25-BCB471-M1X	CAP. ELEC 470 UF 16V +/-20%	1	C876
25-BDB101-M1X	CAP. ELEC 100 UF 25V +/-20%	1	C864
25-BFB101-M1X	CAP. ELEC 100 UF 50V +/-20%	1	C840
25-BFB470-M1X	CAP. ELEC 47 UF 50V +/-20%	1	C812
26-ABC103-ZFX	CAP. CER 0.01 UF 50V +80-20% F	1	C882
26-ABC103-ZFX	CAP. CER 0.01 UF 50V +80-20% F	1	C872
26-ABC103-ZFX	CAP. CER 0.01 UF 50V +80-20% F	1	C862
26-ABC103-ZFX	CAP. CER 0.01 UF 50V +80-20% F	1	C860
26-ABC104-ZFX	CAP. CER 0.1 UF 50V +80-20% F	1	C633
26-ABC104-ZFX	CAP. CER 0.1 UF 50V +80-20% F	1	C878
26-ABC104-ZFX	CAP. CER 0.1 UF 50V +80-20% F	1	C813
26-ABC471-JZX	CAP. CER 470 PF 50V +/-5% SL	1	C865A
26-AIC221-KBX	CAP. CER 220 PF 500V +/-10% B	1	C861
26-AIC221-KBX	CAP. CER 220 PF 500V +/-10% B	1	C881
26-AIC221-KBX	CAP. CER 220 PF 500V +/-10% B	1	C871
26-EBP104-ZFS	CAP. CER 0.1UF 50V +80%/-20%	1	C874
27-MBC104-J0X	CAP. M.P.E 0.1 UF 63V +/-5%	1	C865
27-MBC104-J0X	CAP. M.P.E 0.1 UF 63V +/-5%	1	C817
27-MBC223-J0X	CAP. M.P.E 0.022UF 63V +/-5%	1	C818
27-PBC332-J0X	CAP. P.E 0.0033UF 63V +/-5%	1	C811
50-05000D-NUUG	FUSE 5A 250VAC	1	R881
50-05000D-NUUG	FUSE 5A 250VAC	1	R882
50-05000D-NUUG	FUSE 5A 250VAC	1	R880
66-343730-0B0	HOLLOW RIVET 1.6MMX3.0MMX3.2MM	4	FOR T803
66-343730-0B0	HOLLOW RIVET 1.6MMX3.0MMX3.2MM	3	FOR RT801
66-343730-0B0	HOLLOW RIVET 1.6MMX3.0MMX3.2MM	2	FOR L845
66-343730-0B0	HOLLOW RIVET 1.6MMX3.0MMX3.2MM	1	FOR IC801
66-343730-0B0	HOLLOW RIVET 1.6MMX3.0MMX3.2MM	2	FOR C842
66-343730-0B0	HOLLOW RIVET 1.6MMX3.0MMX3.2MM	2	FOR DB801 1,4
66-343740-0B0	HOLLOW RIVET (2.3MMX4.0MMX3.5MM)	2	FOR D841
66-343740-0B0	HOLLOW RIVET (2.3MMX4.0MMX3.5MM)	2	FOR C806
66-343740-0B0	HOLLOW RIVET (2.3MMX4.0MMX3.5MM)	2	FOR D881
66-343740-0B0	HOLLOW RIVET (2.3MMX4.0MMX3.5MM)	2	FOR D861
10-1N4148-ABX	DIODE 1N4148 (SWITCHING)	1	D1121
10-1N4148-ABX	DIODE 1N4148 (SWITCHING)	1	D1115
10-1N4148-ABX	DIODE 1N4148 (SWITCHING)	1	D1105
10-1N4148-ABX	DIODE 1N4148 (SWITCHING)	1	D1104
11-SA1015-YBX	TRANSISTOR ST2SA1015Y (PNP)	1	Q1110
11-SC1815-YBX	TRANSISTOR 2SC1815-Y (NPN)	1	Q1106
11-SC1815-YBX	TRANSISTOR 2SC1815-Y (NPN)	1	Q1107
11-SC1815-YBX	TRANSISTOR 2SC1815-Y (NPN)	1	Q1119
11-SC1815-YBX	TRANSISTOR 2SC1815-Y (NPN)	1	Q1109
18-CD0102-JNX	RES. C.F. 1K OHM 1/4W +/-5%	1	R1125
18-CD0102-JNX	RES. C.F. 1K OHM 1/4W +/-5%	1	R1102

18-CD0122-JNX	RES. C.F. 1.2K OHM 1/4W +/-5%	1	R1145
18-CD0122-JNX	RES. C.F. 1.2K OHM 1/4W +/-5%	1	R1144
18-CD0123-JNX	RES. C.F. 12K OHM 1/4W +/-5%	1	R1138
18-CD0151-JNX	RES. C.F. 150 OHM 1/4W +/-5%	1	R1123
18-CD0152-JNX	RES. C.F. 1.5K OHM 1/4W +/-5%	1	R1137
18-CD0152-JNX	RES. C.F. 1.5K OHM 1/4W +/-5%	1	R1139
18-CD0183-JNX	RES. C.F. 18K OHM 1/4W +/-5%	1	R1115
18-CD0220-JNX	RES. C.F. 22 OHM 1/4W +/-5%	1	R1134
18-CD0220-JNX	RES. C.F. 22 OHM 1/4W +/-5%	1	R1132
18-CD0279-JNX	RES. C.F. 2.7 OHM 1/4W +/-5%	1	R1140
18-CD0279-JNX	RES. C.F. 2.7 OHM 1/4W +/-5%	1	R1142
18-CD0332-JNX	RES. C.F. 3.3K OHM 1/4W +/-5%	1	R1116
18-CD0333-JNX	RES. C.F. 33K OHM 1/4W +/-5%	1	R1117
18-CD0680-JNX	RES. C.F. 68 OHM 1/4W +/-5%	1	R1124
18-CD0683-JNX	RES. C.F. 68K OHM 1/4W +/-5%	1	R1133
18-CD0683-JNX	RES. C.F. 68K OHM 1/4W +/-5%	1	R1135
18-CE0471-JNX	RES. C.F. 470 OHM 1/2W +/-5%	1	R1122
18-FE0100-JNX	RES. M.O. 10 OHM 1/2W +/-5%	1	R1130
18-FE0560-JNX	RES. M.O. 56 OHM 1/2W +/-5%	1	R1141
18-FE0560-JNX	RES. M.O. 56 OHM 1/2W +/-5%	1	R1136
25-BDB470-M1X	CAP. ELEC 47 UF 25V +/-20%	1	C1107
25-BFB109-M1X	CAP. ELEC 1 UF 50V +/-20%	1	C1105
25-BFB229-M1X	CAP. ELEC 2.2 UF 50V +/-20%	1	C1104
25-BFB479-M1X	CAP. ELEC 4.7 UF 50V +/-20%	1	C1121
25-BFB479-M1X	CAP. ELEC 4.7 UF 50V +/-20%	1	C1118
26-ABC330-JZX	CAP. CER 33 PF 50V +/-5% SL	1	C1106
26-AIC472-KBX	TCL26-AIC472-KBX= CAP. CER 4700 PF 500V	1	C1115
34-A100K0-1IX	COIL CHOKE 10 UH +/-10%	1	L1700
35-LB1005-0IX	FERR BEAD H75 (3.5X1X5)	1	L1104
35-LB1005-0IX	FERR BEAD H75 (3.5X1X5)	1	L1105
T6-0F0046-F002X	ASS'Y - REMOTE HANDSET BD	1	
36-DEG290-XX1L	DEGAUSSING COIL XC-29"	1	
36-ROT002-XX0	ROTARY COIL 600MM	1	TO S002
41-GND029-XX2	ASSY-CRT GND WIRE&HOUSE	1	FOR CRT GROUNDING
54-205140-000	SPACER CRT MOUNTING T=2MM	4	
67-X21679-0E0	SPRING CRT 6MMX50MMX0.6MM	2	
49-341790-BAT	BATT. R6P AA SM3 5#	2	
72-BV88HE-R029A	TV IB INSTRUCTION BOOK R=Y	1	
74-130130-80HAA	POLYBAG W/SUFFOCATION WARNING	1	
75-BV88LL-CC0	POLYFOAM"LL"	1	
75-BV88LR-CC0	POLYFOAM"LR"	1	
75-BV88UL-CC0	POLYFOAM"UL"	1	
75-BV88UR-CC0	POLYFOAM"UR"	1	
76-431970-0AT9A	TV PRI CARTON-BOX BV88 01 7U 00 R=N	1	
58-BV88MP-0UI9A	TV DEC OVERLAY 58-BV88MP-0UI WHITE 01 00	1	
44-29RFLN-TS9A	29"100HZ CRT A68ELM021X121	1	
46-26514H-04XG	HS 4P A/B 500/13 RBGW TJC1-4Y	1	FOR DY
46-CC020T-03JG	HS 3P 2468#24 200MM TJC3-3Y*2	1	FOR VM BD
09-0BAV99-ATX	HIGH SPEED DOUBLE DIODE BAV99	1	DD1
09-0BAV99-ATX	HIGH SPEED DOUBLE DIODE BAV99	1	DD24
09-0BAV99-ATX	HIGH SPEED DOUBLE DIODE BAV99	1	DD25
09-0BAV99-ATX	HIGH SPEED DOUBLE DIODE BAV99	1	DD26
09-FM4001-ETX	SMD.DIODE FM4001	1	DD32
09-FM4001-ETX	SMD.DIODE FM4001	1	DD31
09-LL4148-ATX	SMD. SWITCHING DIODE LL4148	1	DD2
09-LL4148-ATX	SMD. SWITCHING DIODE LL4148	1	DD9

09-LL4148-ATX	SMD. SWITCHING DIODE LL4148	1	DD22
12-BT3904-0BX	SMD. TRANSISTOR MMBT3904LT1(NPN)	1	QD309
12-BT3904-0BX	SMD. TRANSISTOR MMBT3904LT1(NPN)	1	QD301
12-BT3904-0BX	SMD. TRANSISTOR MMBT3904LT1(NPN)	1	QD3
12-BT3904-0BX	SMD. TRANSISTOR MMBT3904LT1(NPN)	1	QD6
12-BT3904-0BX	SMD. TRANSISTOR MMBT3904LT1(NPN)	1	QD5
12-BT3904-0BX	SMD. TRANSISTOR MMBT3904LT1(NPN)	1	QD2
12-BT3904-0BX	SMD. TRANSISTOR MMBT3904LT1(NPN)	1	QD7
12-BT3904-0BX	SMD. TRANSISTOR MMBT3904LT1(NPN)	1	QD11
12-BT3904-0BX	SMD. TRANSISTOR MMBT3904LT1(NPN)	1	QD1
13-108418-CMB	IC AIC1084-18CMTR	1	UD18
13-CW1117-33B	3.3V IC CW1117CB-3.3(SOT-223)	1	UD9
13-CW1117-33B	3.3V IC CW1117CB-3.3(SOT-223)	1	UD8
13-CW1117-33B	3.3V IC CW1117CB-3.3(SOT-223)	1	UD6
13-LD1117-50B	5.0V IC LD1117S50TR	1	UD13
13-M8380H-N3B	IC OM8380H/N3	1	UD10
13-MST5C1-6AB	IC MST5C16A	1	UD7
13-P12021-NFB80	IC TDA12021H/N1F80(WRITE)	1	UD1(CP)
13-V16161-0FBP7	16M DRAM HY57V161610FTP-7	1	UD5
13-V16161-0FBP7	16M DRAM HY57V161610FTP-7	1	UD4
19-AB0000-JTX	RES SMD 0 OHM 1/10W +/-5% 0603	1	RD248
19-AB0000-JTX	RES SMD 0 OHM 1/10W +/-5% 0603	1	RD244
19-AB0000-JTX	RES SMD 0 OHM 1/10W +/-5% 0603	1	RD219
19-AB0000-JTX	RES SMD 0 OHM 1/10W +/-5% 0603	1	RD218
19-AB0000-JTX	RES SMD 0 OHM 1/10W +/-5% 0603	1	RD48
19-AB0000-JTX	RES SMD 0 OHM 1/10W +/-5% 0603	1	RD72
19-AB0000-JTX	RES SMD 0 OHM 1/10W +/-5% 0603	1	RD73
19-AB0000-JTX	RES SMD 0 OHM 1/10W +/-5% 0603	1	RD74
19-AB0000-JTX	RES SMD 0 OHM 1/10W +/-5% 0603	1	RD249
19-AB0000-JTX	RES SMD 0 OHM 1/10W +/-5% 0603	1	LD17
19-AB0000-JTX	RES SMD 0 OHM 1/10W +/-5% 0603	1	LD18
19-AB0000-JTX	RES SMD 0 OHM 1/10W +/-5% 0603	1	LD19
19-AB0000-JTX	RES SMD 0 OHM 1/10W +/-5% 0603	1	RD126
19-AB0000-JTX	RES SMD 0 OHM 1/10W +/-5% 0603	1	RD217
19-AB0000-JTX	RES SMD 0 OHM 1/10W +/-5% 0603	1	RD4
19-AB0000-JTX	RES SMD 0 OHM 1/10W +/-5% 0603	1	RD105
19-AB0000-JTX	RES SMD 0 OHM 1/10W +/-5% 0603	1	RD101
19-AB0101-JTX	RES SMD 100 OHM 1/10W 0603	1	RD140
19-AB0101-JTX	RES SMD 100 OHM 1/10W 0603	1	RD144
19-AB0101-JTX	RES SMD 100 OHM 1/10W 0603	1	RD146
19-AB0101-JTX	RES SMD 100 OHM 1/10W 0603	1	RD43
19-AB0101-JTX	RES SMD 100 OHM 1/10W 0603	1	RD44
19-AB0101-JTX	RES SMD 100 OHM 1/10W 0603	1	RD42
19-AB0101-JTX	RES SMD 100 OHM 1/10W 0603	1	RD41
19-AB0101-JTX	RES SMD 100 OHM 1/10W 0603	1	RD40
19-AB0101-JTX	RES SMD 100 OHM 1/10W 0603	1	RD98
19-AB0101-JTX	RES SMD 100 OHM 1/10W 0603	1	RD147
19-AB0101-JTX	RES SMD 100 OHM 1/10W 0603	1	RD14
19-AB0101-JTX	RES SMD 100 OHM 1/10W 0603	1	RD139
19-AB0101-JTX	RES SMD 100 OHM 1/10W 0603	1	RD133
19-AB0101-JTX	RES SMD 100 OHM 1/10W 0603	1	RD118
19-AB0101-JTX	RES SMD 100 OHM 1/10W 0603	1	RD179
19-AB0101-JTX	RES SMD 100 OHM 1/10W 0603	1	RD91
19-AB0101-JTX	RES SMD 100 OHM 1/10W 0603	1	RD92
19-AB0101-JTX	RES SMD 100 OHM 1/10W 0603	1	RD45
19-AB0101-JTX	RES SMD 100 OHM 1/10W 0603	1	RD168

19-AB0101-JTX	RES SMD 100 OHM 1/10W 0603	1	RD167
19-AB0101-JTX	RES SMD 100 OHM 1/10W 0603	1	RD151
19-AB0101-JTX	RES SMD 100 OHM 1/10W 0603	1	RD193
19-AB0101-JTX	RES SMD 100 OHM 1/10W 0603	1	RD194
19-AB0101-JTX	RES SMD 100 OHM 1/10W 0603	1	RD20
19-AB0101-JTX	RES SMD 100 OHM 1/10W 0603	1	RD21
19-AB0101-JTX	RES SMD 100 OHM 1/10W 0603	1	RD22
19-AB0101-JTX	RES SMD 100 OHM 1/10W 0603	1	RD23
19-AB0101-JTX	RES SMD 100 OHM 1/10W 0603	1	RD236
19-AB0101-JTX	RES SMD 100 OHM 1/10W 0603	1	RD160
19-AB0101-JTX	RES SMD 100 OHM 1/10W 0603	1	RD161
19-AB0101-JTX	RES SMD 100 OHM 1/10W 0603	1	RD88
19-AB0101-JTX	RES SMD 100 OHM 1/10W 0603	1	RD28
19-AB0101-JTX	RES SMD 100 OHM 1/10W 0603	1	RD145
19-AB0101-JTX	RES SMD 100 OHM 1/10W 0603	1	RD178
19-AB0101-JTX	RES SMD 100 OHM 1/10W 0603	1	RD177
19-AB0101-JTX	RES SMD 100 OHM 1/10W 0603	1	RD173
19-AB0101-JTX	RES SMD 100 OHM 1/10W 0603	1	RD172
19-AB0101-JTX	RES SMD 100 OHM 1/10W 0603	1	RD171
19-AB0101-JTX	RES SMD 100 OHM 1/10W 0603	1	RD90
19-AB0101-JTX	RES SMD 100 OHM 1/10W 0603	1	RD89
19-AB0101-JTX	RES SMD 100 OHM 1/10W 0603	1	RD46
19-AB0102-JTX	RES SMD 1K OHM 1/10W 0603	1	RD135
19-AB0102-JTX	RES SMD 1K OHM 1/10W 0603	1	RD158
19-AB0102-JTX	RES SMD 1K OHM 1/10W 0603	1	RD159
19-AB0102-JTX	RES SMD 1K OHM 1/10W 0603	1	RD107
19-AB0102-JTX	RES SMD 1K OHM 1/10W 0603	1	RD108
19-AB0102-JTX	RES SMD 1K OHM 1/10W 0603	1	RD109
19-AB0102-JTX	RES SMD 1K OHM 1/10W 0603	1	RD16
19-AB0102-JTX	RES SMD 1K OHM 1/10W 0603	1	RD96
19-AB0102-JTX	RES SMD 1K OHM 1/10W 0603	1	RD251
19-AB0102-JTX	RES SMD 1K OHM 1/10W 0603	1	RD134
19-AB0102-JTX	RES SMD 1K OHM 1/10W 0603	1	RD110
19-AB0102-JTX	RES SMD 1K OHM 1/10W 0603	1	R311
19-AB0102-JTX	RES SMD 1K OHM 1/10W 0603	1	RD191
19-AB0102-JTX	RES SMD 1K OHM 1/10W 0603	1	RD111
19-AB0102-JTX	RES SMD 1K OHM 1/10W 0603	1	RD112
19-AB0102-JTX	RES SMD 1K OHM 1/10W 0603	1	RD115
19-AB0102-JTX	RES SMD 1K OHM 1/10W 0603	1	RD116
19-AB0102-JTX	RES SMD 1K OHM 1/10W 0603	1	RD117
19-AB0102-JTX	RES SMD 1K OHM 1/10W 0603	1	RD132
19-AB0103-JTX	RES SMD 10K OHM 1/10W 0603	1	RD122
19-AB0103-JTX	RES SMD 10K OHM 1/10W 0603	1	RD253
19-AB0103-JTX	RES SMD 10K OHM 1/10W 0603	1	RD252
19-AB0103-JTX	RES SMD 10K OHM 1/10W 0603	1	RD123
19-AB0103-JTX	RES SMD 10K OHM 1/10W 0603	1	RD213
19-AB0105-JTX	RES SMD 1M OHM 1/10W 0603	1	RD100
19-AB0105-JTX	RES SMD 1M OHM 1/10W 0603	1	RD26
19-AB0105-JTX	RES SMD 1M OHM 1/10W 0603	1	RD189
19-AB0105-JTX	RES SMD 1M OHM 1/10W 0603	1	RD313
19-AB0123-JTX	SMD. RES 12K OHM 1/10 J 0603	1	RD127
19-AB0124-JTX	SMD. RES 120K OHM 1/10 J 0603	1	RD68
19-AB0152-JTX	SMD. RES 1.5K OHM 1/10W +/-5% 0603	1	RD302
19-AB0152-JTX	SMD. RES 1.5K OHM 1/10W +/-5% 0603	1	RD306
19-AB0153-JTX	RES SMD 15K OHM 1/10W 0603	1	RD301
19-AB0153-JTX	RES SMD 15K OHM 1/10W 0603	1	RD195

19-AB0153-JTX	RES SMD 15K OHM 1/10W 0603	1	RD183
19-AB0154-JTX	SMD. RES 150K 1/10W +/-5% 0603	1	RD312
19-AB0221-JTX	RES SMD 220 OHM 1/10W 0603	1	RD205
19-AB0221-JTX	RES SMD 220 OHM 1/10W 0603	1	RD206
19-AB0221-JTX	RES SMD 220 OHM 1/10W 0603	1	RD207
19-AB0222-JTX	RES SMD 2.2K OHM 1/10W 0603	1	RD150
19-AB0223-JTX	SMD. RES 22K OHM 1/10W +/-5% 0603	1	RD212
19-AB0273-JTX	SMD. RES 27K OHM 1/10W +/-5%	1	RD63
19-AB0302-JTX	SMD. RES 3K OHM 1/10W +/-5% 0603	1	RD138
19-AB0302-JTX	SMD. RES 3K OHM 1/10W +/-5% 0603	1	RD8
19-AB0302-JTX	SMD. RES 3K OHM 1/10W +/-5% 0603	1	RD7
19-AB0302-JTX	SMD. RES 3K OHM 1/10W +/-5% 0603	1	RD2
19-AB0302-JTX	SMD. RES 3K OHM 1/10W +/-5% 0603	1	RD142
19-AB0302-JTX	SMD. RES 3K OHM 1/10W +/-5% 0603	1	RD143
19-AB0302-JTX	SMD. RES 3K OHM 1/10W +/-5% 0603	1	RD141
19-AB0302-JTX	SMD. RES 3K OHM 1/10W +/-5% 0603	1	RD136
19-AB0302-JTX	SMD. RES 3K OHM 1/10W +/-5% 0603	1	RD137
19-AB0330-JTX	RES SMD 33 OHM 1/10W +/-5%0603	1	RD71
19-AB0332-JTX	SMD RES 3.3K OHM 1/10W 0603	1	RD265
19-AB0332-JTX	SMD RES 3.3K OHM 1/10W 0603	1	RD230
19-AB0332-JTX	SMD RES 3.3K OHM 1/10W 0603	1	RD266
19-AB0390-JTX	RES SMD 39 OHM 1/10W +/-5%0603	1	RD77
19-AB0390-JTX	RES SMD 39 OHM 1/10W +/-5%0603	1	RD79
19-AB0390-JTX	RES SMD 39 OHM 1/10W +/-5%0603	1	RD78
19-AB0391-FTX	SMD. RES 390 OHM 1/10W +/-1% 0603	1	RD80
19-AB0391-JTX	SMD RES 390 OHM 1/10W 0603	1	RD57
19-AB0392-JTX	SMD. RES 3.9K OHM 1/10W +/-5%	1	RD128
19-AB0392-JTX	SMD. RES 3.9K OHM 1/10W +/-5%	1	RD204
19-AB0393-JTX	SMD. RES 39K OHM 1/10W +/-5%	1	RD95
19-AB0471-JTX	SMD. RES 470 OHM 1/10W +/-5%	1	RD225
19-AB0471-JTX	SMD. RES 470 OHM 1/10W +/-5%	1	RD226
19-AB0471-JTX	SMD. RES 470 OHM 1/10W +/-5%	1	RD210
19-AB0471-JTX	SMD. RES 470 OHM 1/10W +/-5%	1	RD209
19-AB0471-JTX	SMD. RES 470 OHM 1/10W +/-5%	1	RD222
19-AB0471-JTX	SMD. RES 470 OHM 1/10W +/-5%	1	RD192
19-AB0471-JTX	SMD. RES 470 OHM 1/10W +/-5%	1	RD196
19-AB0471-JTX	SMD. RES 470 OHM 1/10W +/-5%	1	RD69
19-AB0471-JTX	SMD. RES 470 OHM 1/10W +/-5%	1	RD224
19-AB0471-JTX	SMD. RES 470 OHM 1/10W +/-5%	1	RD164
19-AB0471-JTX	SMD. RES 470 OHM 1/10W +/-5%	1	RD165
19-AB0471-JTX	SMD. RES 470 OHM 1/10W +/-5%	1	RD166
19-AB0471-JTX	SMD. RES 470 OHM 1/10W +/-5%	1	RD208
19-AB0471-JTX	SMD. RES 470 OHM 1/10W +/-5%	1	RD221
19-AB0471-JTX	SMD. RES 470 OHM 1/10W +/-5%	1	RD199
19-AB0471-JTX	SMD. RES 470 OHM 1/10W +/-5%	1	RD198
19-AB0471-JTX	SMD. RES 470 OHM 1/10W +/-5%	1	RD223
19-AB0472-JTX	RES SMD 4.7K OHM 1/10W 0603	1	RD131
19-AB0472-JTX	RES SMD 4.7K OHM 1/10W 0603	1	RD154
19-AB0472-JTX	RES SMD 4.7K OHM 1/10W 0603	1	RD155
19-AB0472-JTX	RES SMD 4.7K OHM 1/10W 0603	1	RD36
19-AB0472-JTX	RES SMD 4.7K OHM 1/10W 0603	1	RD66
19-AB0472-JTX	RES SMD 4.7K OHM 1/10W 0603	1	RD55
19-AB0472-JTX	RES SMD 4.7K OHM 1/10W 0603	1	RD62
19-AB0472-JTX	RES SMD 4.7K OHM 1/10W 0603	1	RD149
19-AB0472-JTX	RES SMD 4.7K OHM 1/10W 0603	1	RD37
19-AB0472-JTX	RES SMD 4.7K OHM 1/10W 0603	1	RD203

19-AB0472-JTX	RES SMD 4.7K OHM 1/10W 0603	1	RD130
19-AB0472-JTX	RES SMD 4.7K OHM 1/10W 0603	1	RD170
19-AB0473-JTX	SMD. RES 47K OHM 1/10W 0603	1	RD186
19-AB0473-JTX	SMD. RES 47K OHM 1/10W 0603	1	RD303
19-AB0473-JTX	SMD. RES 47K OHM 1/10W 0603	1	RD67
19-AB0473-JTX	SMD. RES 47K OHM 1/10W 0603	1	RD307
19-AB0564-JTX	SMD. RES 560K OHM 1/10W 0603	1	RD200
19-AB0681-JTX	SMD. RES. 680 OHM 1/10W 0603	1	RD56
19-AB0682-JTX	RES SMD 6.8K OHM 1/10W 0603	1	RD156
19-AB0682-JTX	RES SMD 6.8K OHM 1/10W 0603	1	RD157
19-AB0683-JTX	RES SMD 68K OHM 1/10W 0603	1	RD185
19-AB0750-JTX	SMD. RES 75 OHM 1/10W 0603	1	RD50
19-AB0750-JTX	SMD. RES 75 OHM 1/10W 0603	1	RD49
19-AB0750-JTX	SMD. RES 75 OHM 1/10W 0603	1	RD176
19-AB0750-JTX	SMD. RES 75 OHM 1/10W 0603	1	RD84
19-AB0750-JTX	SMD. RES 75 OHM 1/10W 0603	1	RD51
19-AB0750-JTX	SMD. RES 75 OHM 1/10W 0603	1	RD52
19-AB0750-JTX	SMD. RES 75 OHM 1/10W 0603	1	RD76
19-AB0750-JTX	SMD. RES 75 OHM 1/10W 0603	1	RD86
19-AB0750-JTX	SMD. RES 75 OHM 1/10W 0603	1	RD85
19-AB0750-JTX	SMD. RES 75 OHM 1/10W 0603	1	RD175
19-AB0750-JTX	SMD. RES 75 OHM 1/10W 0603	1	RD174
19-AB0821-FTX	SMD. RES 820 OHM 1/10W +/-1% 0603	1	RD75
19-AB0821-JTX	SMD. RES 820 OHM 1/10W +/-5% 0603	1	RD188
19-AB0822-JTX	SMD. RES 8.2K OHM 1/10W +/-5% 0603	1	RD97
19-CD0229-JTX	SMD. RES 2.2 OHM 1/4W +/-5% 1206	1	RD308
19-CD0229-JTX	SMD. RES 2.2 OHM 1/4W +/-5% 1206	1	RD305
23-A08000-JBX	NETWORK RES. SMD 0 OHM	1	RN4
28-AB0100-JCX	SMD. CAP 10 PF 50VDC +/-5%	1	CD128
28-AB0101-JCX	SMD. CAP 100 PF 50VDC +/-5%	1	CD26
28-AB0101-JCX	SMD. CAP 100 PF 50VDC +/-5%	1	CD77
28-AB0101-JCX	SMD. CAP 100 PF 50VDC +/-5%	1	CD216
28-AB0101-JCX	SMD. CAP 100 PF 50VDC +/-5%	1	CD81
28-AB0101-JCX	SMD. CAP 100 PF 50VDC +/-5%	1	CD79
28-AB0101-JCX	SMD. CAP 100 PF 50VDC +/-5%	1	CD78
28-AB0102-KBX	SMD. CAP 1000 PF 50V +/-10% B	1	CD120
28-AB0102-KBX	SMD. CAP 1000 PF 50V +/-10% B	1	CD152
28-AB0102-KBX	SMD. CAP 1000 PF 50V +/-10% B	1	CD213
28-AB0102-KBX	SMD. CAP 1000 PF 50V +/-10% B	1	CD214
28-AB0103-ZFX	CAP.SMD 10NF 50V +80-20% 0603	1	CD159
28-AB0103-ZFX	CAP.SMD 10NF 50V +80-20% 0603	1	CD231
28-AB0103-ZFX	CAP.SMD 10NF 50V +80-20% 0603	1	CD230
28-AB0103-ZFX	CAP.SMD 10NF 50V +80-20% 0603	1	CD162
28-AB0104-ZFX	CAP. SMD 0.1UF 50V +80%~-20% F	1	CD61
28-AB0104-ZFX	CAP. SMD 0.1UF 50V +80%~-20% F	1	CD47
28-AB0104-ZFX	CAP. SMD 0.1UF 50V +80%~-20% F	1	CD60
28-AB0104-ZFX	CAP. SMD 0.1UF 50V +80%~-20% F	1	CD59
28-AB0104-ZFX	CAP. SMD 0.1UF 50V +80%~-20% F	1	CD58
28-AB0104-ZFX	CAP. SMD 0.1UF 50V +80%~-20% F	1	CD62
28-AB0104-ZFX	CAP. SMD 0.1UF 50V +80%~-20% F	1	CD63
28-AB0104-ZFX	CAP. SMD 0.1UF 50V +80%~-20% F	1	CD64
28-AB0104-ZFX	CAP. SMD 0.1UF 50V +80%~-20% F	1	CD66
28-AB0104-ZFX	CAP. SMD 0.1UF 50V +80%~-20% F	1	CD44
28-AB0104-ZFX	CAP. SMD 0.1UF 50V +80%~-20% F	1	CD41
28-AB0104-ZFX	CAP. SMD 0.1UF 50V +80%~-20% F	1	CD57
28-AB0104-ZFX	CAP. SMD 0.1UF 50V +80%~-20% F	1	CD48

28-AB0104-ZFX	CAP. SMD 0.1UF 50V +80%~-20% F	1	CD183
28-AB0104-ZFX	CAP. SMD 0.1UF 50V +80%~-20% F	1	CD184
28-AB0104-ZFX	CAP. SMD 0.1UF 50V +80%~-20% F	1	CD177
28-AB0104-ZFX	CAP. SMD 0.1UF 50V +80%~-20% F	1	CD176
28-AB0104-ZFX	CAP. SMD 0.1UF 50V +80%~-20% F	1	CD29
28-AB0104-ZFX	CAP. SMD 0.1UF 50V +80%~-20% F	1	CD31
28-AB0104-ZFX	CAP. SMD 0.1UF 50V +80%~-20% F	1	CD32
28-AB0104-ZFX	CAP. SMD 0.1UF 50V +80%~-20% F	1	CD33
28-AB0104-ZFX	CAP. SMD 0.1UF 50V +80%~-20% F	1	CD49
28-AB0104-ZFX	CAP. SMD 0.1UF 50V +80%~-20% F	1	CD65
28-AB0104-ZFX	CAP. SMD 0.1UF 50V +80%~-20% F	1	CD178
28-AB0104-ZFX	CAP. SMD 0.1UF 50V +80%~-20% F	1	CD179
28-AB0104-ZFX	CAP. SMD 0.1UF 50V +80%~-20% F	1	CD182
28-AB0104-ZFX	CAP. SMD 0.1UF 50V +80%~-20% F	1	CD181
28-AB0104-ZFX	CAP. SMD 0.1UF 50V +80%~-20% F	1	CD38
28-AB0104-ZFX	CAP. SMD 0.1UF 50V +80%~-20% F	1	CD134
28-AB0104-ZFX	CAP. SMD 0.1UF 50V +80%~-20% F	1	CD165
28-AB0104-ZFX	CAP. SMD 0.1UF 50V +80%~-20% F	1	CD160
28-AB0104-ZFX	CAP. SMD 0.1UF 50V +80%~-20% F	1	CD154
28-AB0104-ZFX	CAP. SMD 0.1UF 50V +80%~-20% F	1	CD56
28-AB0104-ZFX	CAP. SMD 0.1UF 50V +80%~-20% F	1	CD53
28-AB0104-ZFX	CAP. SMD 0.1UF 50V +80%~-20% F	1	CD52
28-AB0104-ZFX	CAP. SMD 0.1UF 50V +80%~-20% F	1	CD51
28-AB0104-ZFX	CAP. SMD 0.1UF 50V +80%~-20% F	1	CD25
28-AB0104-ZFX	CAP. SMD 0.1UF 50V +80%~-20% F	1	CD73
28-AB0104-ZFX	CAP. SMD 0.1UF 50V +80%~-20% F	1	CD74
28-AB0104-ZFX	CAP. SMD 0.1UF 50V +80%~-20% F	1	CD30
28-AB0104-ZFX	CAP. SMD 0.1UF 50V +80%~-20% F	1	CD75
28-AB0104-ZFX	CAP. SMD 0.1UF 50V +80%~-20% F	1	CD76
28-AB0104-ZFX	CAP. SMD 0.1UF 50V +80%~-20% F	1	CD50
28-AB0104-ZFX	CAP. SMD 0.1UF 50V +80%~-20% F	1	CD197
28-AB0104-ZFX	CAP. SMD 0.1UF 50V +80%~-20% F	1	CD130
28-AB0104-ZFX	CAP. SMD 0.1UF 50V +80%~-20% F	1	CD10
28-AB0104-ZFX	CAP. SMD 0.1UF 50V +80%~-20% F	1	CD126
28-AB0104-ZFX	CAP. SMD 0.1UF 50V +80%~-20% F	1	CD129
28-AB0104-ZFX	CAP. SMD 0.1UF 50V +80%~-20% F	1	CD196
28-AB0104-ZFX	CAP. SMD 0.1UF 50V +80%~-20% F	1	CD195
28-AB0104-ZFX	CAP. SMD 0.1UF 50V +80%~-20% F	1	CD192
28-AB0104-ZFX	CAP. SMD 0.1UF 50V +80%~-20% F	1	CD43
28-AB0104-ZFX	CAP. SMD 0.1UF 50V +80%~-20% F	1	CD180
28-AB0104-ZFX	CAP. SMD 0.1UF 50V +80%~-20% F	1	CD221
28-AB0104-ZFX	CAP. SMD 0.1UF 50V +80%~-20% F	1	CD226
28-AB0104-ZFX	CAP. SMD 0.1UF 50V +80%~-20% F	1	CD227
28-AB0104-ZFX	CAP. SMD 0.1UF 50V +80%~-20% F	1	CD228
28-AB0104-ZFX	CAP. SMD 0.1UF 50V +80%~-20% F	1	CD16
28-AB0104-ZFX	CAP. SMD 0.1UF 50V +80%~-20% F	1	CD18
28-AB0104-ZFX	CAP. SMD 0.1UF 50V +80%~-20% F	1	CD20
28-AB0104-ZFX	CAP. SMD 0.1UF 50V +80%~-20% F	1	CD2
28-AB0104-ZFX	CAP. SMD 0.1UF 50V +80%~-20% F	1	CD37
28-AB0104-ZFX	CAP. SMD 0.1UF 50V +80%~-20% F	1	CD69
28-AB0104-ZFX	CAP. SMD 0.1UF 50V +80%~-20% F	1	CD42
28-AB0104-ZFX	CAP. SMD 0.1UF 50V +80%~-20% F	1	CD173
28-AB0104-ZFX	CAP. SMD 0.1UF 50V +80%~-20% F	1	CD34
28-AB0104-ZFX	CAP. SMD 0.1UF 50V +80%~-20% F	1	CD35
28-AB0104-ZFX	CAP. SMD 0.1UF 50V +80%~-20% F	1	CD36
28-AB0104-ZFX	CAP. SMD 0.1UF 50V +80%~-20% F	1	CD240

28-AB0104-ZFX	CAP. SMD 0.1UF 50V +80%~-20% F	1	CD218
28-AB0104-ZFX	CAP. SMD 0.1UF 50V +80%~-20% F	1	CD215
28-AB0104-ZFX	CAP. SMD 0.1UF 50V +80%~-20% F	1	CD21
28-AB0104-ZFX	CAP. SMD 0.1UF 50V +80%~-20% F	1	CD175
28-AB0104-ZFX	CAP. SMD 0.1UF 50V +80%~-20% F	1	CD46
28-AB0104-ZFX	CAP. SMD 0.1UF 50V +80%~-20% F	1	CD45
28-AB0104-ZFX	CAP. SMD 0.1UF 50V +80%~-20% F	1	CD54
28-AB0104-ZFX	CAP. SMD 0.1UF 50V +80%~-20% F	1	CD67
28-AB0104-ZFX	CAP. SMD 0.1UF 50V +80%~-20% F	1	CD70
28-AB0104-ZFX	CAP. SMD 0.1UF 50V +80%~-20% F	1	CD71
28-AB0104-ZFX	CAP. SMD 0.1UF 50V +80%~-20% F	1	CD72
28-AB0104-ZFX	CAP. SMD 0.1UF 50V +80%~-20% F	1	CD39
28-AB0104-ZFX	CAP. SMD 0.1UF 50V +80%~-20% F	1	CD40
28-AB0104-ZFX	CAP. SMD 0.1UF 50V +80%~-20% F	1	CD19
28-AB0104-ZFX	CAP. SMD 0.1UF 50V +80%~-20% F	1	CD190
28-AB0104-ZFX	CAP. SMD 0.1UF 50V +80%~-20% F	1	CD187
28-AB0104-ZFX	CAP. SMD 0.1UF 50V +80%~-20% F	1	CD17
28-AB0150-JCX	CAP.SMD 15P 50V +/-5% 0603	1	CD223
28-AB0150-JCX	CAP.SMD 15P 50V +/-5% 0603	1	CD224
28-AB0154-ZFX	CAP.SMD 0.15UF 50V +80-20 0603	1	CD233
28-AB0220-JCX	CAP. SMD 22PF 50V +/-5% C	1	CD88
28-AB0220-JCX	CAP. SMD 22PF 50V +/-5% C	1	CD87
28-AB0221-JCX	CAP.SMD 220PF 50V C 0603 +/-5%	1	CD225
28-AB0221-JCX	CAP.SMD 220PF 50V C 0603 +/-5%	1	CD1
28-AB0223-ZFX	CAP.SMD 0.022UF 50V 80-20 0603	1	CD136
28-AB0224-ZFX	CAP.SMD 0.22UF 50V +80-20%0603	1	CD149
28-AB0330-JCX	SMD CAP 33PF 50V +/-5%	1	CD139
28-AB0330-JCX	SMD CAP 33PF 50V +/-5%	1	CD122
28-AB0330-JCX	SMD CAP 33PF 50V +/-5%	1	CD137
28-AB0330-JCX	SMD CAP 33PF 50V +/-5%	1	CD124
28-AB0330-JCX	SMD CAP 33PF 50V +/-5%	1	CD138
28-AB0330-JCX	SMD CAP 33PF 50V +/-5%	1	CD123
28-AB0470-JCX	CAP.SMD 47PF 50V +/-5% 0603	1	CD211
28-AB0471-JCX	CAP.SMD 470PF 50V +/-5% 0603	1	CD94
28-AB0471-JCX	CAP.SMD 470PF 50V +/-5% 0603	1	CD229
28-AB0471-KBX	SMD.CAP. 470PF 50V +/-10%	1	CD210
28-AB0472-KBX	CAP.SMD 4700PF 50V +/-10% 0603	1	CD135
28-AB0473-ZFX	SMD CAP 0.047 UF 50V +80-20%	1	CD115
28-AB0473-ZFX	SMD CAP 0.047 UF 50V +80-20%	1	CD116
28-AB0473-ZFX	SMD CAP 0.047 UF 50V +80-20%	1	CD108
28-AB0473-ZFX	SMD CAP 0.047 UF 50V +80-20%	1	CD109
28-AB0473-ZFX	SMD CAP 0.047 UF 50V +80-20%	1	CD117
28-AB0473-ZFX	SMD CAP 0.047 UF 50V +80-20%	1	CD110
28-AB0473-ZFX	SMD CAP 0.047 UF 50V +80-20%	1	CD111
28-AB0473-ZFX	SMD CAP 0.047 UF 50V +80-20%	1	CD112
28-AB0473-ZFX	SMD CAP 0.047 UF 50V +80-20%	1	CD113
28-AB0473-ZFX	SMD CAP 0.047 UF 50V +80-20%	1	CD107
28-AB0473-ZFX	SMD CAP 0.047 UF 50V +80-20%	1	CD114
28-AB0473-ZFX	SMD CAP 0.047 UF 50V +80-20%	1	CD118
28-YC0105-MTX	TANTALUM CAP.1 UF 16V +/-20% 3216	1	CD157
28-YC0105-MTX	TANTALUM CAP.1 UF 16V +/-20% 3216	1	CD158
33-DLL100-KTX	SMD. COIL 10 UH +/-10% 3225	1	LD34
33-DLL100-KTX	SMD. COIL 10 UH +/-10% 3225	1	LD35
33-DLL100-KTX	SMD. COIL 10 UH +/-10% 3225	1	LD7
33-DLL100-KTX	SMD. COIL 10 UH +/-10% 3225	1	LD15
33-DLL100-KTX	SMD. COIL 10 UH +/-10% 3225	1	LD16

33-DLL229-JTX	SMD. COLL 1210 2.2UH +/-5%	1	LD36
33-ELL109-KTX	SMD.COLL MGFI2012CIROKT	1	LD5
33-ELL109-KTX	SMD.COLL MGFI2012CIROKT	1	LD8
33-ELL109-KTX	SMD.COLL MGFI2012CIROKT	1	LD6
33-ELN221-NTX	CHIP BEAD 220 OHM +/-25%	1	LD21
33-ELN221-NTX	CHIP BEAD 220 OHM +/-25%	1	LD22
33-ELN221-NTX	CHIP BEAD 220 OHM +/-25%	1	LD20
33-ELN221-NTX	CHIP BEAD 220 OHM +/-25%	1	LD4
33-ELN221-NTX	CHIP BEAD 220 OHM +/-25%	1	LD29
33-ELN221-NTX	CHIP BEAD 220 OHM +/-25%	1	LD25
33-ELN221-NTX	CHIP BEAD 220 OHM +/-25%	1	LD27
33-ELN221-NTX	CHIP BEAD 220 OHM +/-25%	1	LD28
33-ELN601-NTA	CHIP BEAD 600 OHM +/-25%	1	LD38
33-ELN601-NTA	CHIP BEAD 600 OHM +/-25%	1	LD37
33-GLN102-NTX	CHIP BEAD 1000 OHM +/-25%	1	LD40
33-GLN222-NTX	CHIP BEAD MGGB3216 M222HT 1206 2.2K	1	LD41
33-GLN301-NTX	CHIP BEAD 300 OHM +/-25%	1	LD23
33-KLN300-NTA	CHIP BEAD 30 OHM +/-25%	1	LD90
33-KLN501-NTX	BEAD BGH0603B501LT 500 OHM	1	LD2
33-KLN501-NTX	BEAD BGH0603B501LT 500 OHM	1	LD13
33-KLN501-NTX	BEAD BGH0603B501LT 500 OHM	1	LD12
33-KLN501-NTX	BEAD BGH0603B501LT 500 OHM	1	LD11
33-KLN501-NTX	BEAD BGH0603B501LT 500 OHM	1	LD10
33-KLN501-NTX	BEAD BGH0603B501LT 500 OHM	1	LD3
33-KLN501-NTX	BEAD BGH0603B501LT 500 OHM	1	LD9
33-KLN501-NTX	BEAD BGH0603B501LT 500 OHM	1	LD1
33-KLN601-NTA	CHIP BEAD 600 OHM +/-25%	1	LD39
33-KLN601-NTX	CHIP BEAD 600 OHM +/-25%	1	LD30
40-MS21EM-DIF2XG	P.C.B DIGIBOARD	1	
11-0BC327-CBX	TRANSISTOR BC327-40	1	QD306
11-0BC327-CBX	TRANSISTOR BC327-40	1	QD303
11-BC547B-0BX	TRANSISTOR BC547B (NPN) 126	1	QD302
11-BC547B-0BX	TRANSISTOR BC547B (NPN) 126	1	QD305
13-00M24C-32P	IC EEPROM 32K(PDIP8) M24C32 (WRITE)	1	UD3(CP)
18-DB0393-FNX	RES. M.F. 39K OHM 1/6W +/-1%	1	RD197
25-BCL100-M1X	CAP.ELEC 10UF 16V +/-20% 2MM	1	CD4
25-BCL100-M1X	CAP.ELEC 10UF 16V +/-20% 2MM	1	CD209
25-BCL100-M1X	CAP.ELEC 10UF 16V +/-20% 2MM	1	CD172
25-BCL100-M1X	CAP.ELEC 10UF 16V +/-20% 2MM	1	CD171
25-BCL100-M1X	CAP.ELEC 10UF 16V +/-20% 2MM	1	CD174
25-BCL100-M1X	CAP.ELEC 10UF 16V +/-20% 2MM	1	CD131
25-BCL100-M1X	CAP.ELEC 10UF 16V +/-20% 2MM	1	CD133
25-BCL100-M1X	CAP.ELEC 10UF 16V +/-20% 2MM	1	CD168
25-BCL100-M1X	CAP.ELEC 10UF 16V +/-20% 2MM	1	CD5
25-BCL100-M1X	CAP.ELEC 10UF 16V +/-20% 2MM	1	CD6
25-BCL100-M1X	CAP.ELEC 10UF 16V +/-20% 2MM	1	CD68
25-BCL100-M1X	CAP.ELEC 10UF 16V +/-20% 2MM	1	CD7
25-BCL100-M1X	CAP.ELEC 10UF 16V +/-20% 2MM	1	CD8
25-BCL100-M1X	CAP.ELEC 10UF 16V +/-20% 2MM	1	CD9
25-BCL100-M1X	CAP.ELEC 10UF 16V +/-20% 2MM	1	CD189
25-BCL101-M1X	CAP.ELEC 100UF 16V +/-20%	1	CD82
25-BCL101-M1X	CAP.ELEC 100UF 16V +/-20%	1	CD243
25-BCL101-M1X	CAP.ELEC 100UF 16V +/-20%	1	CD194
25-BCL101-M1X	CAP.ELEC 100UF 16V +/-20%	1	CD92
25-BCL101-M1X	CAP.ELEC 100UF 16V +/-20%	1	CD99
25-BCL101-M1X	CAP.ELEC 100UF 16V +/-20%	1	CD100

25-BCL101-M1X	CAP.ELEC 100UF 16V +/-20%	1	CD125
25-BCL101-M1X	CAP.ELEC 100UF 16V +/-20%	1	CD127
25-BCL101-M1X	CAP.ELEC 100UF 16V +/-20%	1	CD98
25-BCL101-M1X	CAP.ELEC 100UF 16V +/-20%	1	CD193
25-BCL101-M1X	CAP.ELEC 100UF 16V +/-20%	1	CD222
25-BCL101-M1X	CAP.ELEC 100UF 16V +/-20%	1	CD232
25-BCL101-M1X	CAP.ELEC 100UF 16V +/-20%	1	CD241
25-BCL101-M1X	CAP.ELEC 100UF 16V +/-20%	1	CD220
25-BCL101-M1X	CAP.ELEC 100UF 16V +/-20%	1	CD198
25-BCL470-M1X	CAP.ELEC 47UF 16V +/-20% (5X11)	1	CD251
25-BCL470-M1X	CAP.ELEC 47UF 16V +/-20% (5X11)	1	CD169
25-BCL470-M1X	CAP.ELEC 47UF 16V +/-20% (5X11)	1	CD163
25-BCL470-M1X	CAP.ELEC 47UF 16V +/-20% (5X11)	1	CD90
25-BCL470-M1X	CAP.ELEC 47UF 16V +/-20% (5X11)	1	CD89
25-BFL229-M1X	CAP. ELEC 2.2 UF 50V P=2.5MM	1	CD150
25-BFL229-M1X	CAP. ELEC 2.2 UF 50V P=2.5MM	1	CD80
25-BFL479-M1X	CAP. ELEC 4.7 UF 50V +/-20%	1	CD151
27-RCP913-J0X	CAP. PP 0.091 UF 100V +/-5%	1	CD217
45-OSC12M-0Y0	CRYSTAL 12MHZ	1	XD1
45-OSC14M-3Y2	CRYSTAL 14.31818MHZ	1	XD2
45-OSC24M-5N0	CRYSTAL 24.576 MHZ	1	XD4
45-SAWK33-50K	SAW FILTER K3350K (38.9MHZ)	1	XD5A
46-27626W-06XG	PIN BASE *6 TJC3-6AW	1	PD1
46-27626W-11XG	PIN BASE *11 TJC3-11AW	1	PD4
46-35147W-40XG	PIN BASE *40 20X2	1	PD3
46-35147W-40XG	PIN BASE *40 20X2	1	PD2
47-ICS009-XX0	IC SOCKET (8 PINS)	1	FOR UD3
67-S42483-2E2	SHIELD CAN	1	
62-216340-0UN	TCL62-216340-0UN= BLOCK R=N	1	
62-321780-0HG	TV RAW FASTENER CRT DEGAUSSING COIL 25""	4	
62-431470-0CN	CRT BRACKET	2	
55-BV88RC-0CN5F	REAR CABINET	1	
58-CA41RI-XUI1A	TV DEC OVERLAY REAR AV -- 33 00 R=N	1	
58-DT18SI-2UI9H	TV PRI LABEL BV88 WHITE & BLACK R=N	1	