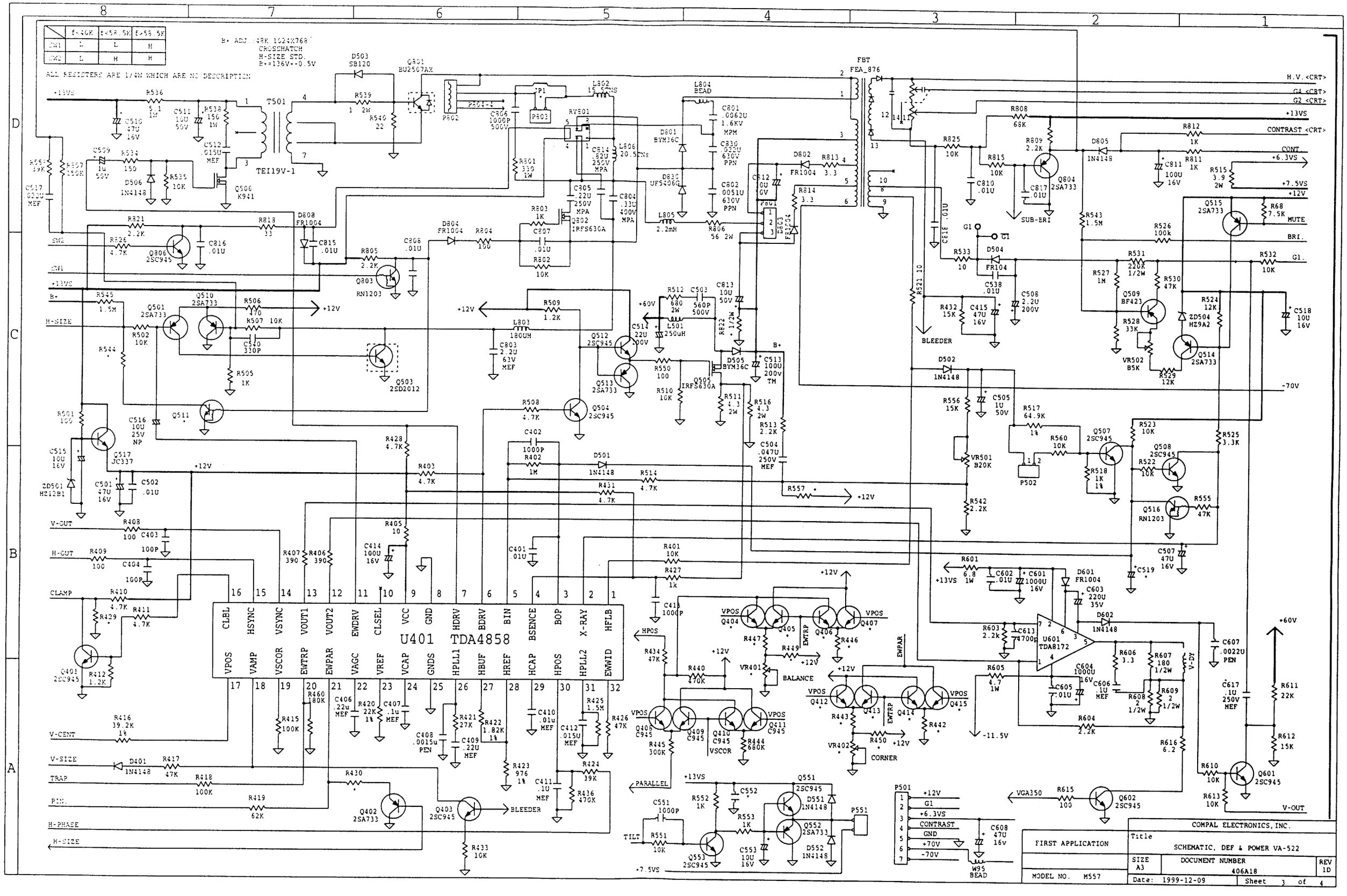

	f<40K	f<58.5K	f>58.5K
SW1	L	L	H
SW2	L	H	H

FIRST APPLICATION	COMPAL ELECTRONICS, INC.		
	Title: SCHEMATIC, DEF & POWER VA-522		
	SIZE A3	DOCUMENT NUMBER 406A18	REV 1D
MODEL NO. M557	Date: 1999-12-09	Sheet 3 of 4	

FOR 456A18-01,-02,-03
446A18-01