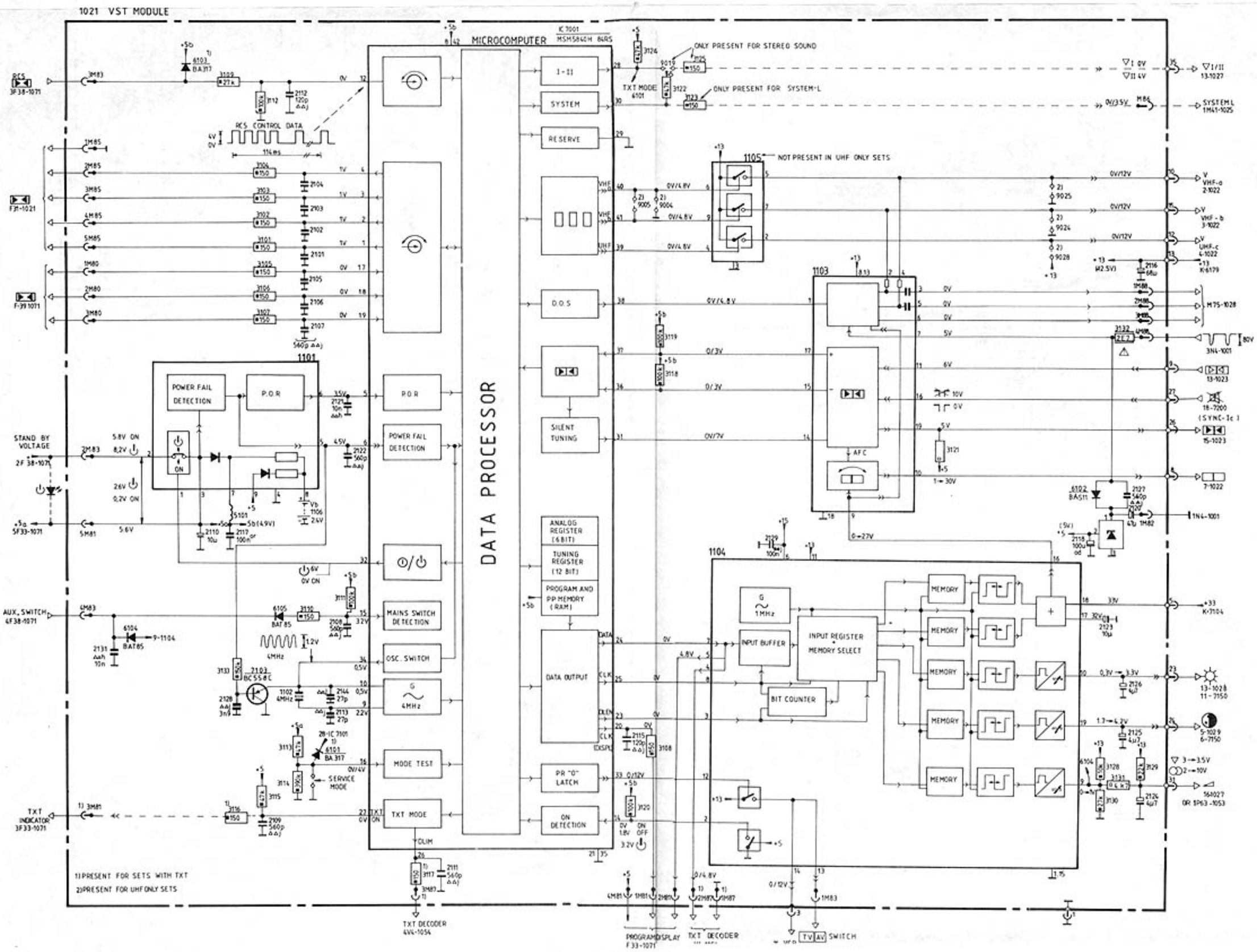
1021 VST MODULE
MICROCOMPUTER
IC 7001
MSM5840H 84RS
DATA PROCESSOR
I-II
SYSTEM
RESERVE
D.O.S
SILENT TUNING
ANALOG REGISTER (6 BIT)
TUNING REGISTER (12 BIT)
PROGRAM AND PP MEMORY (RAM)
DATA OUTPUT
PR "0" LATCH
ON DETECTION
P.O.R
POWER FAIL DETECTION
MAINS SWITCH DETECTION
OSC. SWITCH
MODE TEST
TXT MODE
RCS CONTROL DATA
ONLY PRESENT FOR STEREO SOUND
ONLY PRESENT FOR SYSTEM-L
NOT PRESENT IN UHF ONLY SETS
1101
1103
1104
1105
AFC
INPUT BUFFER
INPUT REGISTER MEMORY SELECT
BIT COUNTER
MEMORY
STAND BY VOLTAGE
AUX. SWITCH
TXT INDICATOR
SERVICE MODE
TXT DECODER
PROGRAM DISPLAY
SWITCH
1) PRESENT FOR SETS WITH TXT
2) PRESENT FOR UHF ONLY SETS

PHILIPS K-40

Circuit diagram remote control

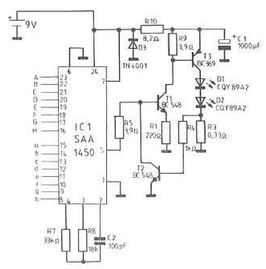

K-40

LIST OF DIODES AND TRANSISTORS

TYPE	SHORT DESCRIPTION: DATA	EQUIVALENTS
BA 317	Si, S, Uni, 30 V, 0,1A, 4ns	1N4148
BAS11	Si, Uni, contr. av 300V, 0,35 A, 1us	BYX 57/...
BAT85	Si, Schottky, 55, 30V, 0,2 A, 5ns	
BAY10	Si, S, 67V, 0,3 A, 16ns	
BAV21	Si, Uni, 250V, 0,25A, <50ns	BAV21
BAX14	Si, Uni, 0,5 A, <30ns	BAY15, BAW62, BA159
BAX18	Si, Uni, 75 V, 0,5 A	
BZX79B	ZENER DIODE, 2 A + 200V, B1/2%), (G5%) 0,4 W	BYX48
BZV85	ZENER DIODE, 5,1 - 75 V, 5%, 1W.	BY 255, BY 299, HSP800...M
BY 228	Si, TV-Damper, 1000-1500V, 3A	
BY 229	Si, TV-Damper, 200-900V, 7A	
BYV27/XX	Si, RECT, contr. av, 50-200V, 2 A, <50ns	
BYV95A	Si, RECT, contr. av 200-1000V, 1,5A, <300ns	
BYW95A	Si, RECT, contr. av 200-1000V, 3 A, <300ns	
ZTK 33B	IC - TUNER - STAB 33V	BAY61 BA 209
1N4148	Si, S, 65/75V, 0,2 A, <4ns	
1N5062	Si, RECT, 800V, 1A	
	TRANSISTORS	
BC 368	Si, NPN, NF-Tr, 25V, 1A, 0,8W, 65 MHz	BC 337
BC 369	Si, PNP, NF Tr, 25V, 1A, 0,8W, 65 MHz	BC 338
BC 547	Si, NPN, Uni, 50V, 0,1A, 0,5W, 300 MHz	BC 237
BC 548	Si, NPN, Uni, 30V, 0,1A, 0,5W, 300MHz	BC 238
BC 557	Si, PNP, Uni, 50V, 0,1A, 0,5W, 150MHz	BC 307
BC 558	BC557, 30V	
BD 234	Si, PNP, NF-L, 45V, 2A, 25W, >3 MHz	BD176 BD 438 BF 255, BF 494, BF 495
BF 240	Si, NPN, AM/FM-ZF-re, 400 MHz	BF 167 BF 200
BF 819	Si, NPN, Vid-L, TV-HA-Tr, 300V, 0,1A, 45 MHz	BF 583
BF 869	Si, NPN, Vid-L, 250V, 0,05A, 5W, 60 MHz	BF 859
BU508A	Si, NPN, CTV-HA, 1500/700V, 8A, 125W	BU 908
BUW 11	Si, NPN, S-L, 850/400V, 5A, 100W.	BUX 47 BUX 83
KSC2219A	Si, NPN, S-L, 800/500, A1900/500, 5A, 70W, 3MHz	BU426A

ABBREVIATIONS:
Contr. av = controlled avalanched.
ZF-IF stages, SS = fast switching.
CTV = color TV horizontal deflection
NF-L = audio frequency applications-power.

DIAGRAM A

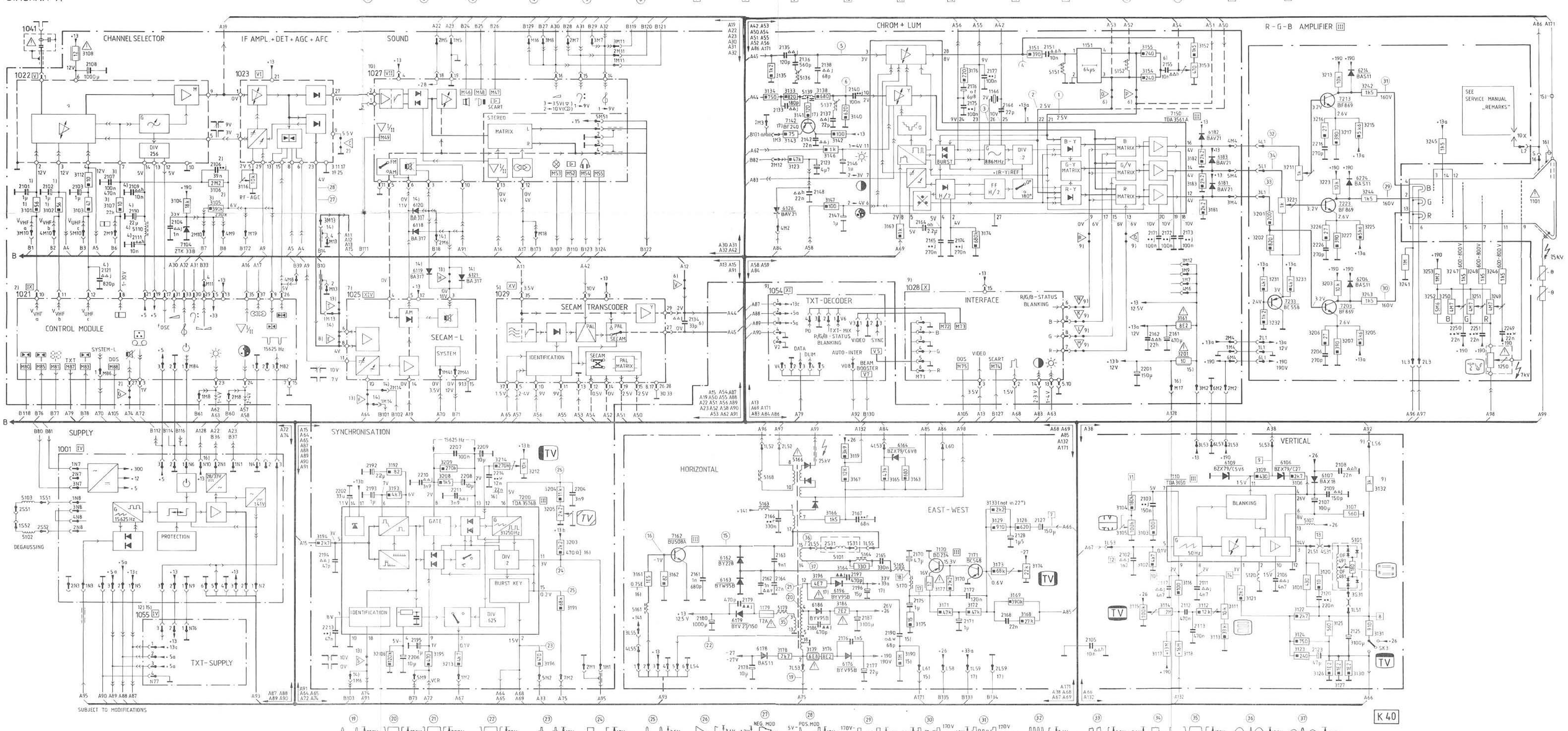

1021 TRD-ECO MODULE (CITAC)

+5 — 6101 BA317 — 2102 100n ●●j — 2103 22n ΔΔh — 3106 300 — 1102 1.2V

7104 PCD8571 RAM MEMORY (8; 5; 6; 1.2.3.4.7)

7102 PCD8571 RAM MEMORY (8; +5; 5; 6; 1.2.3.4)

+13 (16) +13 (22)

7101 SAB 3035

DATA — 5F38-1071 — 5M83 — 3109 100 — SDA 5

CLOCK — 4F38-1071 — 4M83 — 3108 100 — SCL 6

+5 — 3140 4k7 — 2104 120p ΔΔj — 3141 4k7 TO — 2105 120p ΔΔj

I²C

3F38-1071 — 3M83
+5 — 2F38-1071 — 2M83 — +5
TV/AV — 1M83 — 3107
1N6-1001 — 1M84
2N6-1001 — 2M84
+5 — 3N6-1001 — 3M84 — +5 (5V)
●d 2106 100µ

6103 BZX79B6V2 — 3110 3k9 — 7 — IDENTI-FICATION

+5 — 3113 47k — 3114 100 — И1 8 — I/II — 2109 120p ΔΔj

+5 — 3112 10k — 6102 BA317 — 9 — 2107 120p ΔΔj — 3111 15k

10 — AFC TEST

G — 4MHz — 1101 4MHz — 2116 22p ΔΔj — 1J

FREQUENCY BUFFER

COUNTER — COUNTER

+13 — 3151 10k — 7150 BC558 — 3150 47k

+13 — 3152 68k — 3101 56k — 2101 1n5 ΔΔj — 1J

3104 3k9 — +13 — 3103 3k3 — 3102 3k3 — 1J

2117 ●● 680n — 14 — 1J

17 +33a

+13 — 3122 360k — 3118 68k — 1 — 3119 33k

+13 — 3123 360k — 3117 68k — 2 — 3120 33k

3 — 3115 100 — 4 — 2110 120p ΔΔj — 1M83 — 3107 100

18 — 6104 BA317 — 2108 120p ΔΔj

19 — 20 — 21

23 ΔΔh — 2115 10n

+13 — 3133 360k — 3128 68k — 25 — 3129 33k

+13 — 3135 68k — 3127 3k — 26 — 3130 1k — 3134 10k

+13 — 3136 360k — 3126 36k — 27 — 3131 15k

+13 — 3125 68k — 28 — 3132 33k

M85 — F41-1071

31 — 16-1027 OR 1P63-1053

23 — 13-1028 11-7150

24 — 5-1029 6-7150

30 — 15-1027 OR 2P63-1053

33 — 14-1027 OR 3P63-1053

29 — 4P63-1053 OR IC22-1074

37 — 12-1027

3 — 9-7200 (SYNC-IC)

10 — V VHF-a 2-1022

11 — V VHF-b 3-1022

12 — V UHF-c 4-1022

17 — F osc 12-1022

21 — +5 14-1022

19 — F osc 13-1022

+13 — 3143 1k5 — 7142 BC558B — 7138 BC558B — 3138 560 — 3142 560 — 3144 220 — 3145 220

+13 (12V) — K-6179 — 13 — 15 — ●f 2112 100µ — 2111 100n ●●j

+33 — K-7104 — 5 — 3137 47 — ●g 2114 33u — 2113 100n ●●j — 7 — 1J — +33a (33V) — 10V — 0V

I — II

STOP SEARCH TUNING — 18-7200 — 27

35 — I — II — 13-1027

9 — 13-1023

8 — 7-102

PRS. 00276 TO2

1001 SUPPLY PANEL (SOPS)

* MEASURED IN RESPECT OF ⊥ ϟ

DEGAUSSING

FOR VST SYSTEM

FOR TRD SYSTEM

PRESENT IN CASE OF TELETEXT

12) - present for TXT-sets with mains isolation

13) - not present for sets with SCART connection

14) - present for sets with SCART connection

15) - not present for sets with SOPS-supply

16) - present for sets with SOPS-supply

17) - present for sets with beam booster

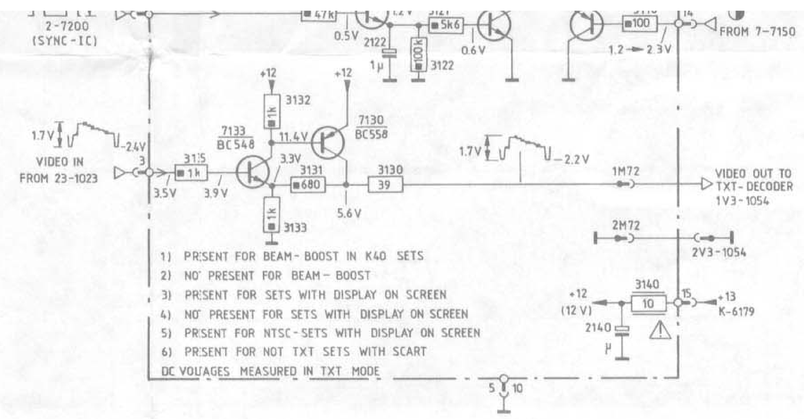

1053 STEREO AMPLIFIER

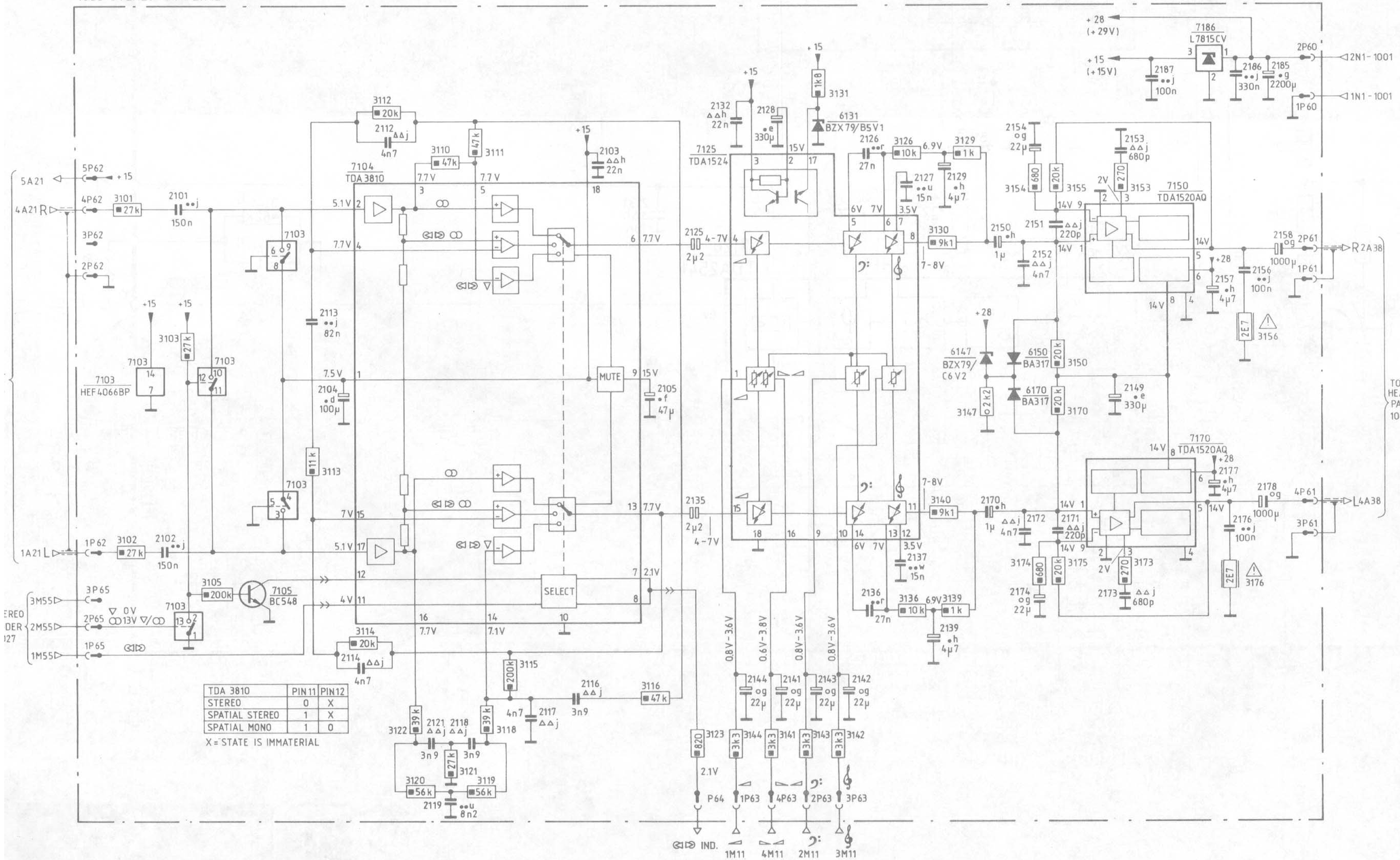

TDA 3810	PIN 11	PIN 12
STEREO	0	X
SPATIAL STEREO	1	X
SPATIAL MONO	1	0

X = STATE IS IMMATERIAL

1023 IF MODULE MONO

1) NOT PRESENT FOR TRD

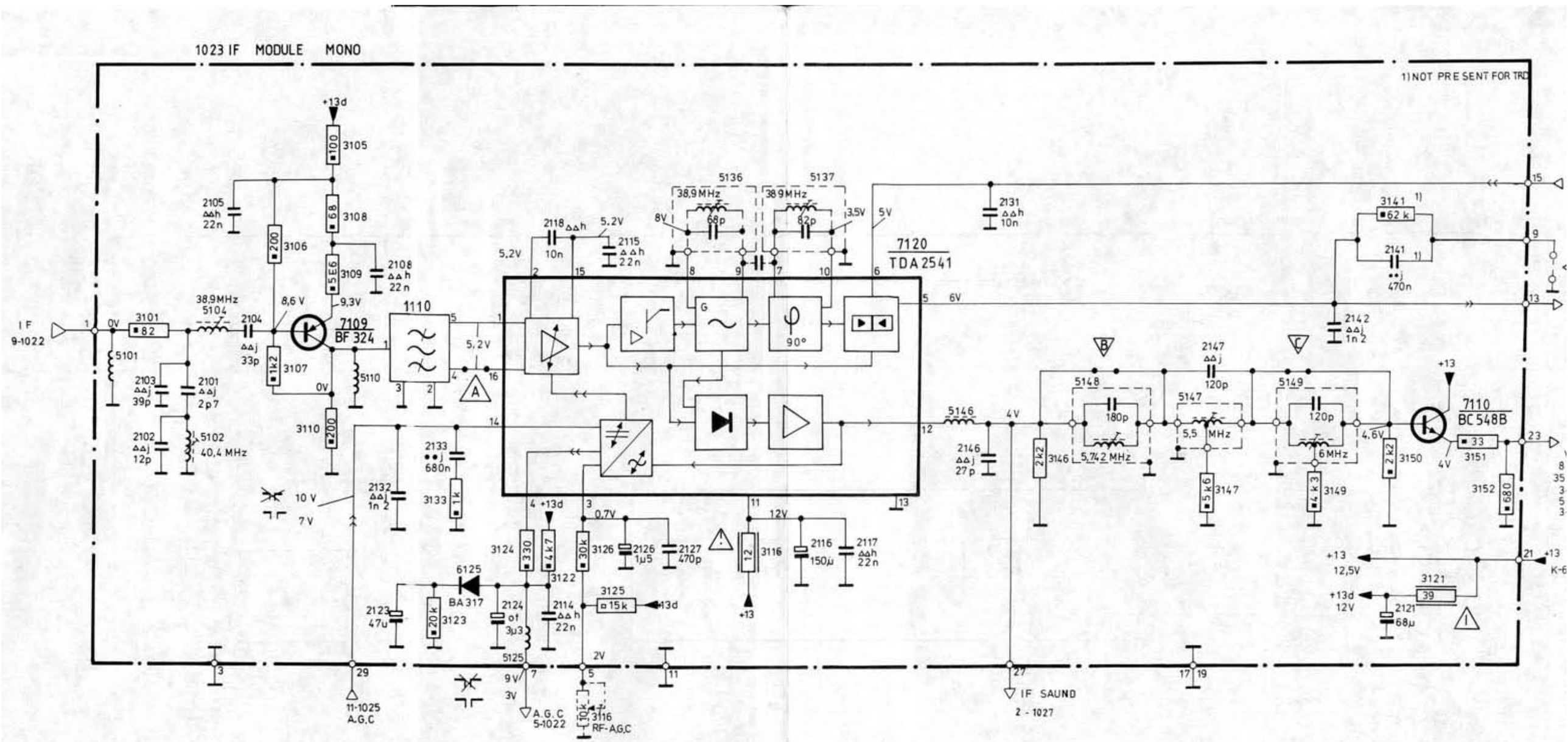

DIAGRAM - B

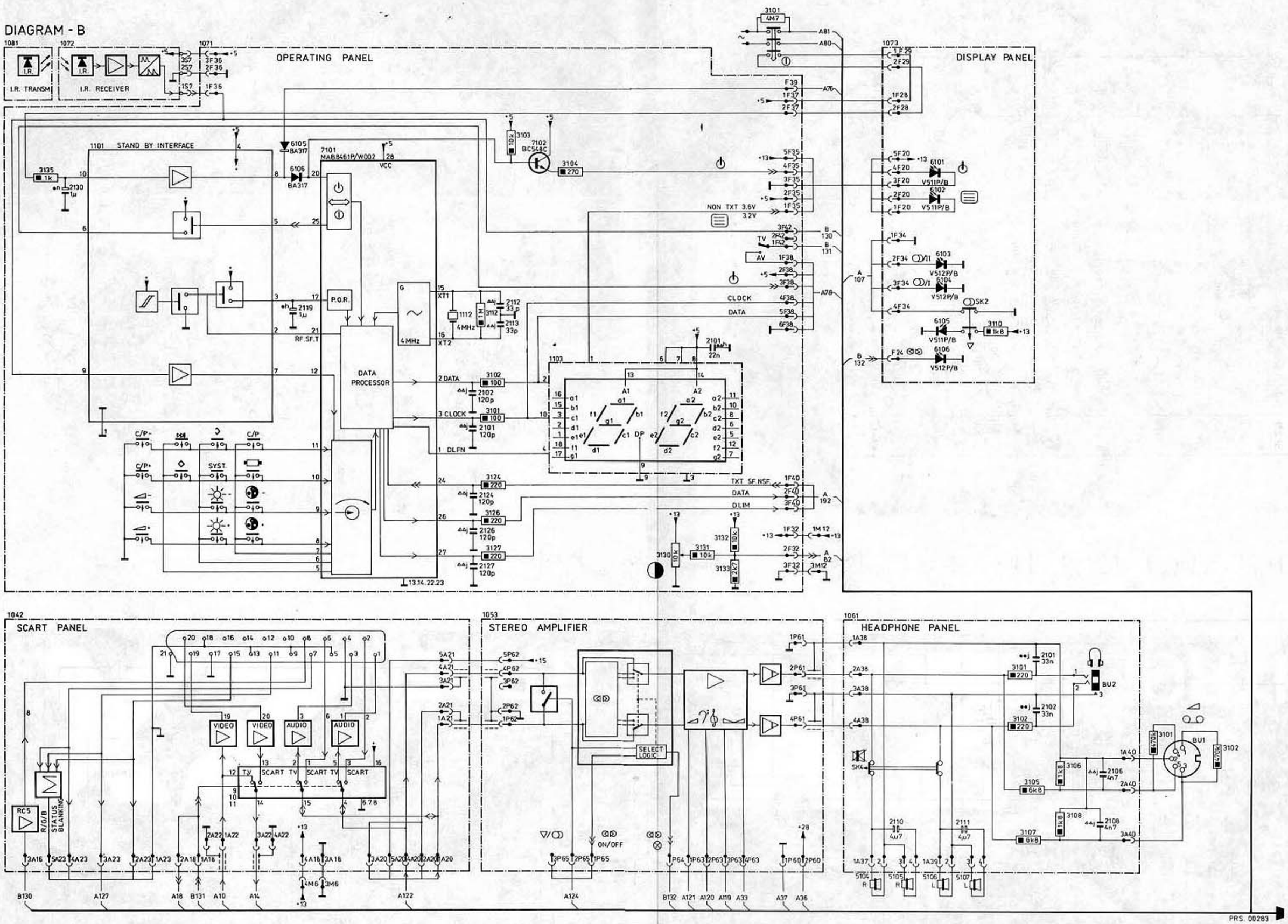

OPERATING PANEL
I.R. TRANSM
I.R. RECEIVER
STAND BY INTERFACE
DATA PROCESSOR
P.O.R.
DISPLAY PANEL
NON TXT 3.6V
3.2V
CLOCK
DATA
TXT SF NSF
DLIM
SCART PANEL
STEREO AMPLIFIER
SELECT LOGIC
ON/OFF
HEADPHONE PANEL
VIDEO
AUDIO
SCART
STATUS BLANKING
R/G/B
PRS. 00283

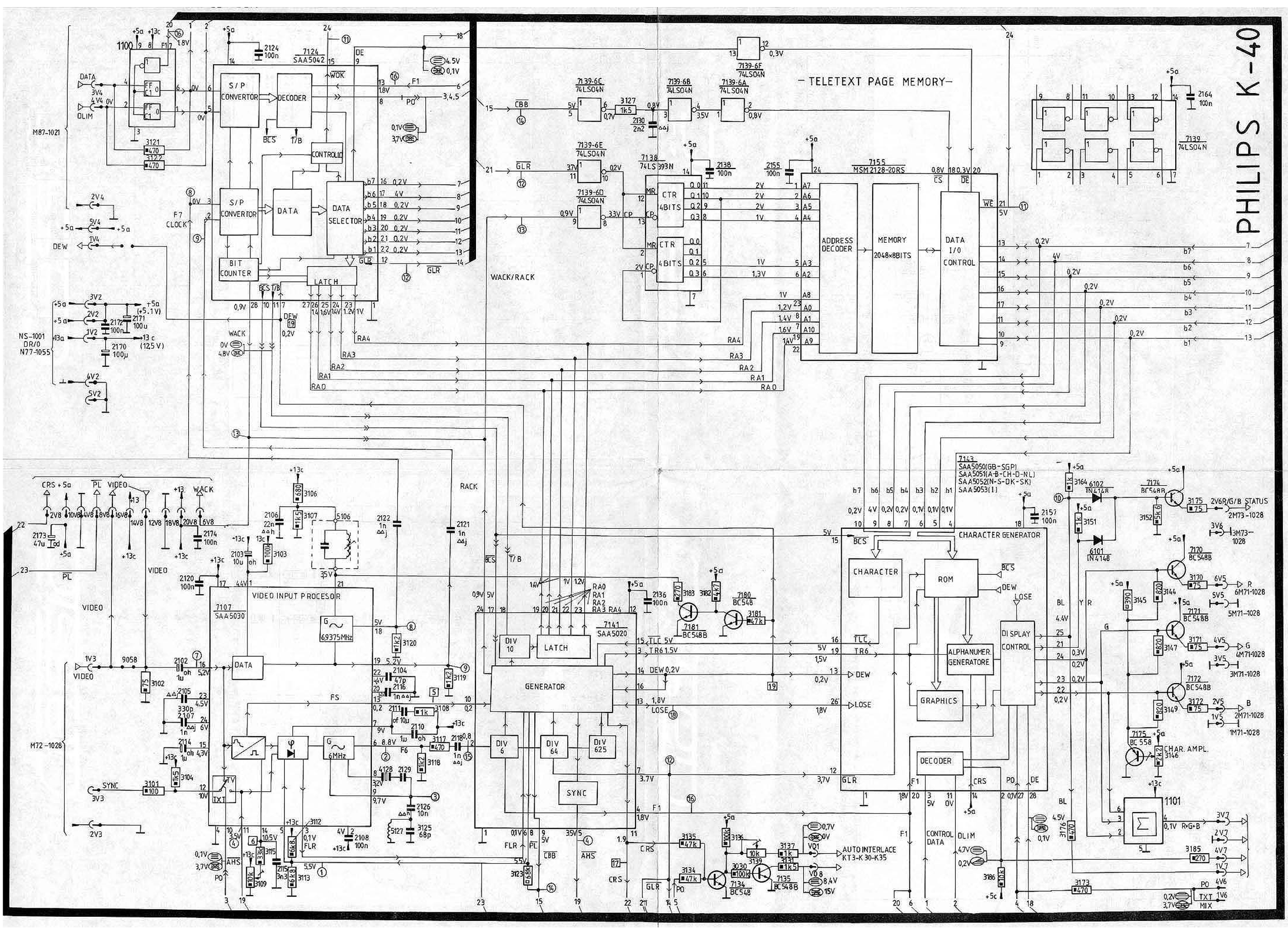
PHILIPS K-40
- TELETEXT PAGE MEMORY -
S/P CONVERTOR
DECODER
CONTROLLO
DATA
DATA SELECTOR
BIT COUNTER
LATCH
7124 SAA5042
7139-6C 74LS04N
7139-6B 74LS04N
7139-6A 74LS04N
7139-6F 74LS04N
7139-6E 74LS04N
7139-6D 74LS04N
7138 74LS393N
CTR 4BITS
7155 MSM2128-20RS
ADDRESS DECODER
MEMORY 2048×8BITS
DATA I/O CONTROL
7139 74LS04N
WACK/RACK
RACK
M87-1021
NS-1001 DR/0 N77-1055
M72-1028
VIDEO INPUT PROCESOR
7107 SAA5030
6,9375MHz
6MHz
7141 SAA5020
GENERATOR
DIV 10
DIV 6
DIV 64
DIV 625
SYNC
7143 SAA5050(GB-SGP) SAA5051(A-B-CH-D-NL) SAA5052(N-S-DK-SK) SAA5053(I)
CHARACTER GENERATOR
CHARACTER
ROM
ALPHANUMER. GENERATORE
GRAPHICS
DISPLAY CONTROL
DECODER
CONTROL DATA
AUTO INTERLACE KT3-K30-K35
CHAR. AMPL.
STATUS
2V6R/G/B
2M73-1028
3M73-1028
6M71-1028
5M71-1028
4M71-1028
3M71-1028
2M71-1028
1M71-1028
1101
1100