HITACHI

PA

No. 0146

43FDX10B 43FDX11B
53UDX10B 61UDX10B

SERVICE MANUAL

NTSC

DP15 DP15E
Chassis

R/C: CLU-5711TSI
CLU-5713TSI

CONTENTS

TO GO TO A CHAPTER, CLICK ON IT'S HEADING BELOW

IMPORTANT SAFETY INSTRUCTIONS 2
SERVICING PRECAUTIONS 6
TECHNICAL CAUTIONS 10
SPECIFICATIONS 11
CIRCUIT PROTECTION 11
CAUTIONS WHEN CONNECTING/DISCONNECTING THE HV CONNECTOR 12
GENERAL INFORMATION 13
REMOTE CONTROL 14
CUSTOMIZED PICTURE AND SOUND ADJUSTMENTS 15
REAR PANEL CONNECTION 17
DISPLAY PICTURE FORMATS 22
SERVICE ADJUSTMENTS 30
TROUBLESHOOTING 64
WAVEFORMS 67
DC VOLTAGE TABLES 71
PROTECTION CIRCUIT BLOCK DIAGRAM 81
BASIC CIRCUIT DIAGRAM 83
PRINTED CIRCUIT BOARDS 98
BLOCK DIAGRAM 110
WIRING DIAGRAM 111
CHASSIS WIRING DRAWING 112
EXPLODED VIEW . . . . . 116 Updated 02/20/03
REPLACEMENT PARTS LIST . . . . . 119 Updated 4/10/03
QUICK REFERENCE PARTS LIST 148
PWB Part Numbers added 149

CAUTION: These servicing instructions are for use by qualified service personnel only. To reduce the risk of electric shock do not perform any servicing other than that contained in the operating instructions unless you are qualified to do so. Before servicing this chassis, it is important that the service technician read the “IMPORTANT SAFETY INSTRUCTIONS” in this service manual.

SAFETY NOTICE
USE ISOLATION TRANSFORMER WHEN SERVICING

Components having special safety characteristics are identified by a ⚠ on the schematics and on the parts list in this Service Data and its supplements and bulletins. Before servicing the chassis, it is important that the service technician

SPECIFICATIONS AND PARTS ARE SUBJECT TO CHANGE FOR IMPROVEMENT

PROJECTION COLOR TELEVISION

MAY 2001 **HHEA-MANUFACTURING DIVISION**

Version 0146.04

IMPORTANT SAFETY INSTRUCTIONS
USE ISOLATION TRANSFORMER WHEN SERVICING

Components having special safety characteristics are identified by a ⚠ on the schematics and on the parts list in this service manual and its supplements and bulletins. Before servicing this chassis, it is important that the service technician read and follow the “Important Safety Instructions” in this Service Manual.

For continued X-Radiation protection, replace picture tube with original type or Hitachi approved equivalent type.

This Service Manual is intended for qualified service technicians; it is not meant for the casual do-it-yourselfer. Qualified technicians have the necessary test equipment and tools, and have been trained to properly and safely repair complex products such as those covered by this manual.
Improperly performed repairs can adversely affect the safety and reliability of the product and may void warranty. If you are not qualified to perform the repair of this product properly and safely, you should not risk trying to do so and refer the repair to a qualified service technician.

WARNING

Lead in solder used in this product is listed by the California Health and Welfare agency as a known reproductive toxicant which may cause birth defects or other reproductive harm (California Health and Safety Code, Section 25249.5).

When servicing or handling circuit boards and other components which contain lead in solder, avoid unprotected skin contact with solder. Also, when soldering do not inhale any smoke or fumes produced.

This television receiver provides display of television closed captioning in accordance with section 15.119 of the FCC rules.

FEDERAL COMMUNICATIONS COMMISSION NOTICE

This equipment has been tested and found to comply with the limits for a Class B digital device, pursuant to Part 15 of the FCC Rules. These limits are designed to provide reasonable protection against harmful interference in a residential installation. This equipment generates, uses, and can radiate radio frequency energy and, if not installed and used in accordance with the instructions, may cause harmful interference to radio communications. However, there is no guarantee that interference will not occur in a particular installation. If this equipment does cause harmful interference to radio or television reception, which can be determined by turning the equipment off and on, the user is encouraged to try to correct the interference by one or more of the following measures:

- Reorient or relocate the receiving antenna.
- Increase the separation between the equipment and the receiver.
- Connect the equipment into an outlet on a circuit different from that to which the receiver is connected.
- Consult the dealer or an experienced radio/television technician for help.

IMPORTANT SAFETY INSTRUCTION

1. Before returning an instrument to the customer, always make a safety check of the entire instrument, including but not limited to the following items.
   a. Be sure that no built-in protective devices are defective and/or have been deleted during servicing. (1) Protective shields are provided on this chassis to protect both the technician and the customer. Correctly replace all missing protective shields, including any removed for servicing convenience. (2) When reinstalling the chassis and/or other assembly in the cabinet, be sure to put back in place all protective devices, including but not limited to, nonmetallic control knobs, insulating fishpaper, adjustment and compartment covers/shields, and isolation resistor/capacitor networks. **Do not operate this instrument or permit it to be operated without all protective devices correctly installed and functioning. Servicers who defeat safety features or fail to perform safety checks may be liable for any resulting damage.**

   b. Be sure that there are no cabinet openings through which an adult or child might be able to insert their fingers and contact a hazardous voltage. Such openings include, but are not limited to (1) spacing between the picture tube and cabinet mask, (2) excessively wide cabinet ventilation slots, and (3) an improperly fitted and/or incorrectly secured cabinet back cover.

   c. **Antenna Cold Check** – With the instrument AC plug removed from any AC source, connect an electrical jumper across the two AC plug prongs. Place the instrument AC switch in the on position. Connect one lead of an ohmmeter to the AC plug prongs tied together and touch the other ohmmeter lead in turn to each tuner antenna input, exposed terminal screw and, if applicable, to the coaxial connector. If the measured resistance is less than 1.0 megohms or greater than 5.2 megohms, an abnormality exists that must be corrected before the instrument is returned to the customer. Repeat this test with the instrument AC switch in the off position.

   d. **Leakage Current Hot Check** – With the instrument completely reassembled, plug the AC line cord directly into a 120V AC outlet. (Do not use an isolation transformer during this test.) Use a leakage current tester or a metering system that complies with American National Standards Institute (ANSI) C101.0 Leakage Current for Appliances and Underwriters Laboratories (UL) 1410, (50.7). With the instrument AC switch first in the on position and then in the off position, measure from a known earth ground (metal waterpipe, conduit, etc.) to all exposed metal parts of the instrument (antennas, handle bracket, metal cabinet, screw heads, metallic overlays, control shafts, etc.), especially any exposed metal parts that offer an electrical return path to the chassis. Any current measured must not exceed 0.5 milliamps. Reverse the instrument power cord plug in the outlet and repeat test.

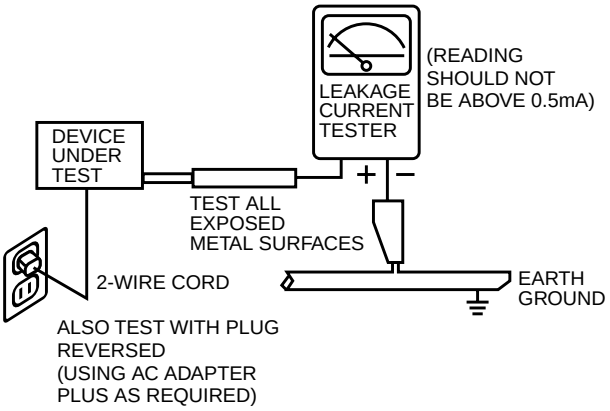

AC Leakage Test

ANY MEASUREMENTS NOT WITHIN THE LIMITS SPECIFIED HEREIN INDICATE A POTENTIAL SHOCK HAZARD THAT MUST BE ELIMINATED BEFORE RETURNING THE INSTRUMENT TO THE CUSTOMER OR BEFORE CONNECTING THE ANTENNA OR ACCESSORIES.

   e. **High Voltage —** This receiver is provided with a hold down circuit for clearly indicating that voltage has increased in excess of a predetermined value. Comply will all notes described in this Service Manual regarding this hold down circuit when servicing, so that this hold down circuit may correctly be operated.

   f. **Service Warning —** With maximum contrast, operating high voltage in this receiver is lower than **31.5 kV.** In case any component having influence on high voltage is replaced, confirm that the high voltage with maximum contrast is lower than **31.5 kV.**
   To measure H.V. use a high impedance H.V. meter. Connect (-) to chassis earth and (+) to the CRT anode button. (See the following connection diagram.)

   Note: Turn power switch off without fail before the connection to the anode button is made.

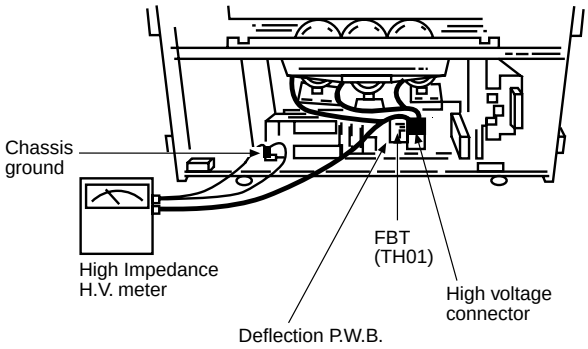

IMPORTANT SAFETY INSTRUCTIONS

g. **X-radiation – TUBE:** The primary source of X-radiation in this receiver is the picture tube. The tube utilized for the above mentioned function in this chassis is specially constructed to limit X-radiation emissions.
For continued X-radiation protection, the replacement tube must be the same type as the original, Hitachi approved type.
When troubleshooting and making test measurements in a receiver with a problem of excessive high voltage, avoid being unnecessarily close to the picture tube and the high voltage component.
Do not operate the chassis longer than is necessary to locate the cause of excessive voltage.

h. **X-radiation Shield –**
1. This receiver is provided with X-ray shield plates for protection against X-radiation. Do not remove X-ray shield plates A, B, or C shown in Fig. 1 unnecessarily, when troubleshooting and/or making test measurements.
2. To prevent X-radiation, after replacement of picture tube and lens, confirm these components to be fixed correctly to bracket and cabinet, and not to be taken off easily.

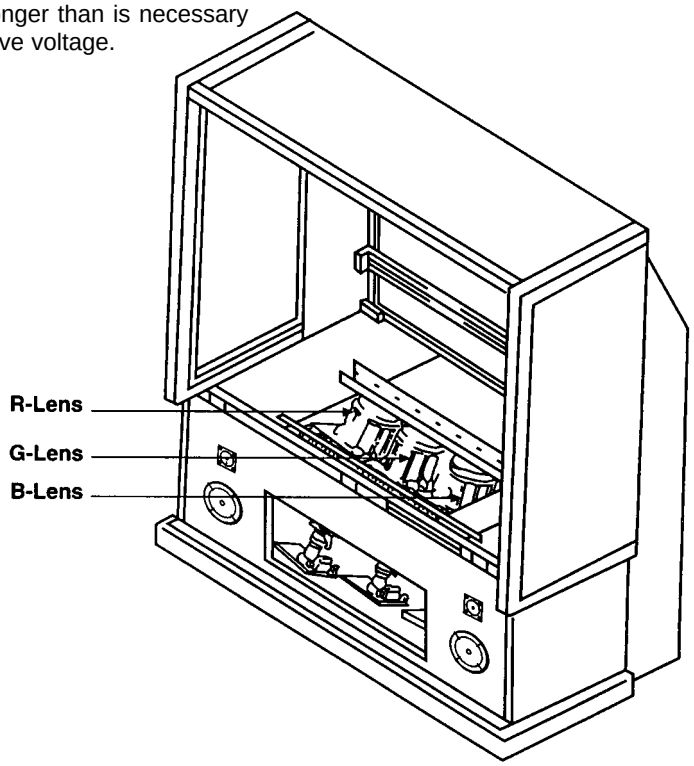

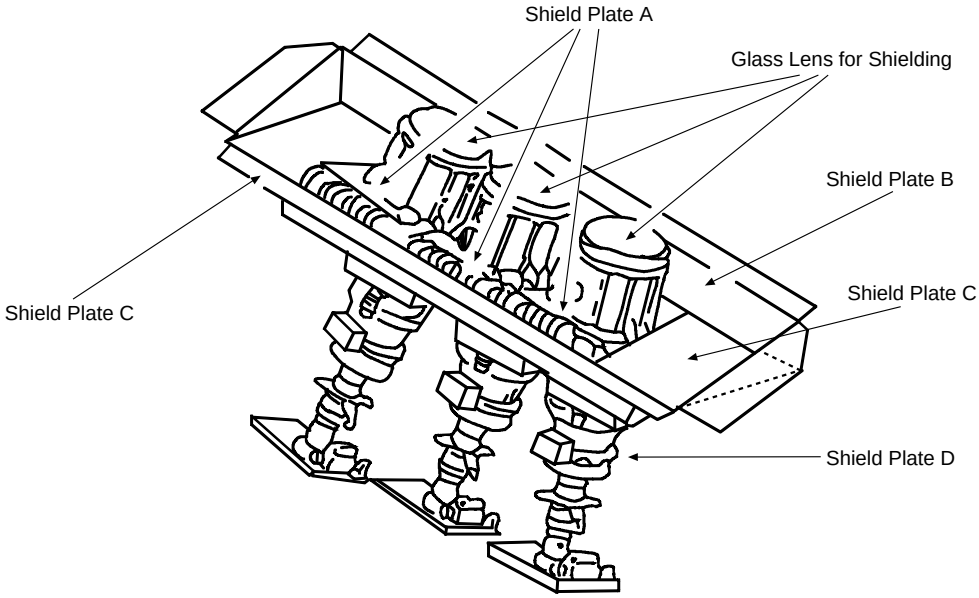

Detailing X-radiation shield

Fig. 1. Installation of shield lens, shield cover and shield plates (oblique view).

IMPORTANT SAFETY INSTRUCTIONS

2. Read and comply with all caution and safety-related notes on or inside the receiver cabinet, on the receiver chassis, or on the picture tube.

3. **Design Alteration Warning** – Do not alter or add to the mechanical or electrical design of this TV receiver. Design alterations and additions including but not limited to circuit modifications and the addition of items such as auxiliary audio and/or video output connectors, might alter the safety characteristics of this receiver and create a hazard to the user. Any design alterations or additions may void the manufacturer's warranty and may make you, the servicer, responsible for personal injury or property damage resulting therefrom.

4. **Picture Tube Implosion Protection Warning** – The picture tube in this receiver employs integral implosion protection. For continued implosion protection, replace the picture tube only with one of the same type number. Do not remove, install, or otherwise handle the picture tube in any manner without first putting on shatterproof goggles equipped with side shields. People not so equipped must be kept safely away while picture tubes are handled. Keep the picture tube away from your body. Do not handle the picture tube by its neck.

5. **Hot Chassis Warning** – **a.** Some TV receiver chassis are electrically connected directly to one conductor of the AC power cord and may be safely serviced without an isolation transformer only if the AC power plug is inserted so that the chassis is connected to the ground side of the AC power source. Confirm that the AC power plug is inserted correctly with an AC voltmeter by measuring between the chassis and a known earth ground. If a voltage reading in excess of 1.0V is obtained, remove and reinsert the AC power plug in the opposite polarity and again measure the voltage potential between the chassis and a known earth ground. **b.** Some TV receiver chassis normally have 85V AC (RMS) between chassis and earth ground regardless of the AC plug polarity. These chassis can be safely serviced only with an isolation transformer inserted in the power line between the receiver and the AC power source, for both personnel and test equipment protection. c. Some TV receiver chassis have a secondary ground system in addition to the main chassis ground. This secondary ground system is not isolated from the AC power line. The two ground systems are electrically separated by insulating material that must not be defeated or altered.

6. Observe original lead dress. Take extra care to assure correct lead dress in the following areas: **a.** near sharp edges, **b.** near thermally hot parts – be sure that leads and components do not touch thermally hot parts, **c.** the AC supply, **d.** high voltage and **e.** antenna wiring. Always inspect in all areas for pinched, out-of-plate, or frayed wiring. Do not change spacing between components and the printed circuit board. Check AC power cord for damage.

7. Components, parts, and/or wiring that appear to have overheated or are otherwise damaged should be replaced with components, parts, or wiring that meet original specifications. Additionally, determine the cause of overheating and/or damage and, if necessary, take corrective action to remove any potential safety hazard.

8. **PRODUCT SAFETY NOTICE** – Many TV electrical and mechanical parts have special safety-related characteristics some of which are often not evident from visual inspection, nor can the protection they give necessarily be obtained by replacing them with components rated for higher voltage, wattage, etc. Parts that have special safety characteristics are identified in Hitachi service data by shading on schematics and by a ⚠ in the parts list. Use of substitute replacement that does not have the same safety characteristics as the recommended replacement part in Hitachi service data parts list might create shock, fire, and/or other hazards. Product safety is under review continuously and new instructions are issued whenever appropriate. For the latest information, always consult the appropriate current Hitachi service literature. A subscription to, or additional copies of service literature may be obtained at a nominal charge from Hitachi.

SERVICING PRECAUTIONS

CAUTION: Before servicing instruments covered by this service data and its supplements and addenda, read and follow the "Important Safety Instructions" on page 3 of this publication.

NOTE: If unforeseen circumstances create conflict between the following servicing precautions and any of the safety precautions on page 3 of this publication, always follow the safety precautions. Remember: Safety First.

General Servicing Guidelines

1. Always unplug the instrument AC power cord from the AC power source before:
   a. Removing or reinstalling any component, circuit board, module, or any other instrument assembly.

   b. Disconnecting or reconnecting any instrument electrical plug or other electrical connection.

   c. Connecting a test substitute in parallel with an electrolytic capacitor in the instrument.
      CAUTION: A wrong part substitution or incorrect polarity installation of electrolytic capacitors may result in an explosion hazard.

   d. Discharging the picture tube anode.

2. Test high voltage only by measuring it with an appropriate high voltage meter or other voltage measuring device (DVM, FETVOM, etc.) equipped with a suitable high voltage probe. Do not test high voltage by "drawing an arc." The H.V. Distribution Box has an internal 400MW resistor (bleeder resistor) connected from the high voltage to ground. After power is removed from the instrument the high voltage will discharge through the high voltage bleeder resistor. If the tubes have high voltage after power is removed, then the bleeder resistor is defective or the bleeder ground is disconnected.

3. Discharge the picture tube's anode at any of the R, G, or B outputs on the H.V. Distribution Box only by (a) first connecting one end of an insulated clip lead to the degaussing or kine aquadag grounding system shield at the point where the picture tube socket ground lead is connected, and then (b) touch the other end of the insulated clip lead to the picture tube high voltage distribution box R, G, or B output, using an insulated handle to avoid personal contact with high voltage.

4. Do not spray chemicals on or near this instrument or any of its assemblies.

5. Unless specified otherwise in these service data, clean electrical contracts by applying the following mixture to the contacts with a pipe cleaner, cotton-tipped stick or comparable nonabrasive applicator: 10% (by volume) Acetone and 90% (by volume) isopropyl alcohol (90%-99% strength).
   CAUTION: This is a flammable mixture. Unless specified otherwise in these service data, lubrication of contacts is not required.

6. Do not defeat any plug/socket B+ voltage interlocks with which instruments covered by this service data might be equipped.

7. Do not apply AC power to this instrument and/or any of its electrical assemblies unless all solid-state device heat-sinks are correctly installed.

8. Always connect the test instrument ground lead to the appropriate instrument chassis ground before connecting the test instrument positive lead. Always remove the test instrument ground lead last.

9. Use with this instrument only the test fixtures specified in this service data.
   CAUTION: Do not connect the test fixture ground strap to any heatsink in this instrument.

Electrostatically Sensitive (ES) Devices

Some semiconductor (solid state) devices can be damaged easily by static electricity. Such components commonly are called Electrostatically Sensitive (ES) Devices. Examples of typical ES devices are integrated circuits and some field-effect transistors and semiconductor "chip" components. The following techniques should be used to help reduce the incidence of component damage caused by static electricity.

1. Immediately before handling any semiconductor component or semiconductor-equipped assembly, drain off any electrostatic charge on your body by touching a known earth ground. Alternatively, obtain and wear a commercially available discharging wrist strap device, which should be removed for potential shock reasons prior to applying power to the unit under test.

2. After removing an electrical assembly equipped with ES devices, place the assembly on a conductive surface such as aluminum foil, to prevent electrostatic charge buildup or exposure of the assembly.

3. Use only a grounded-tip soldering iron to solder or desolder ES devices.

4. Use only can anti-static type solder removal device. Some solder removal devices not classified as "anti-static" can generate electrical charges sufficient to damage ES device.

5. Do not use freon-propelled chemicals. These can generate electrical charges sufficient to damage ES devices.

6. Do not remove a replacement ES device from its protective package until immediately before you are ready to install it. (Most replacement ES devices are packaged with leads electrically shorted together by conductive foam, aluminum foil or comparable conductive material.)

7. Immediately before removing the protective material from the leads of a replacement ES device, touch the protective material to the chassis or circuit assembly into which the device will be installed.
   CAUTION: Be sure no power is applied to the chassis or circuit, and observe all other safety precautions.

8. Minimize bodily motions when handling unpackaged replacement ES devices. (Otherwise harmless motion such as the brushing together of your clothes fabric or the lifting of your foot from a carpeted floor can generate

General Soldering Guidelines

1. Use a grounded-tip, low-wattage soldering iron and appropriate tip size and shape that will maintain tip temperature within the range 500°F to 600°F.

2. Use an appropriate gauge of resin-core solder composed of 60 parts tin/40 parts lead.

3. Keep the soldering iron tip clean and well-tinned.

4. Thoroughly clean the surfaces to be soldered. Use a small wire-bristle (0.5 inch or 1.25 cm) brush with a metal handle. Do not use freon-propelled spray-on cleaners.

5. Use the following desoldering technique.
   a. Allow the soldering iron tip to reach normal temperature (500°F to 600°F).

   b. Heat the component lead until the solder melts. Quickly draw away the melted solder with an anti-static, suction-type solder removal device or with solder braid.
      CAUTION: Work quickly to avoid overheating the circuit board printed foil.

6. Use the following soldering technique.
   a. Allow the soldering iron tip to reach normal temperature (500°F to 600°F).

   b. First, hold the soldering iron tip and solder strand against the component lead until the solder melts.

   c. Quickly move the soldering iron tip to the junction of the component lead and the printed circuit foil, and hold it there only until the solder flows onto and around both the component lead and the foil.
      CAUTION: Work quickly to avoid overheating the circuit board printed foil or components.

   d. Closely inspect the solder area and remove any excess or splashed solder with a small wire-bristle brush.

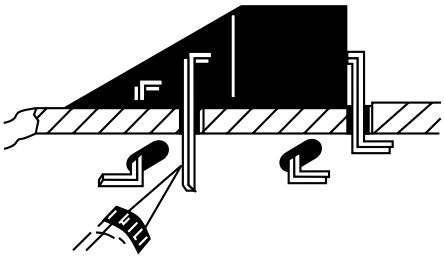

Use Solding Iron to Pry Leads

IC Removal/Replacement

Some Hitachi unitized chassis circuit boards have slotted holes (oblong) through which the IC leads are inserted and then bent flat against the circuit foil. When holes are the slotted type, the following technique should be used to remove and replace the IC. When working with boards using the familiar round hole, use the standard technique as outlined in paragraphs 5 and 6 above.

Removal

1. Desolder and straighten each IC lead in one operation by gently prying up on the lead with the soldering iron tip as the solder melts.

2. Draw away the melted solder with an anti-static suction-type solder removal device (or with solder braid) before removing the IC.

Replacement

1. Carefully insert the replacement IC in the circuit board.

2. Carefully bend each IC lead against the circuit foil pad and solder it.

3. Clean the soldered areas with a small wire-bristle brush. (It is not necessary to reapply acrylic coating to areas.)

"Small-signal" Discrete Transistor Removal/Replacement

1. Remove the defective transistor by clipping its leads as close as possible to the component body.

2. Bend into a "U" shape the end of each of three leads remaining on the circuit board.

3. Bend into a "U" shape the replacement transistor leads.

4. Connect to replacement transistor leads to the corresponding leads extending from the circuit board and crimp the "U" with long nose pliers to insure metal to metal contact, then solder each connection.

Power Output Transistor Devices Removal/Replacements

1. Heat and remove all solder from around the transistor leads.

2. Remove the heatsink mounting screw (if so equipped).

3. Carefully remove the transistor from the circuit board.

4. Insert new transistor in circuit board.

5. Solder each transistor lead, and clip off excess lead.

6. Replace heatsink.

Diode Removal/Replacement

1. Remove defective diode by clipping its leads as close as possible to diode body.

2. Bend the two remaining leads perpendicularly to the circuit board.

3. Observing diode polarity, wrap each lead of the new diode around the corresponding lead on the circuit board.

4. Securely crimp each connection and solder it.

5. Inspect (on the circuit board copper side) the solder joints of the two "original leads". If they are not shiny, reheat them and, if necessary, apply additional solder.

Fuses and Conventional Resistor Removal/Replacement

1. Clip each fuse or resistor lead at top of circuit board hollow stake.

2. Securely crimp leads of replacement component around stake 1/8 inch from top.

3. Solder the connections.
   CAUTION: Maintain original spacing between the replaced component and adjacent components and the circuit board, to prevent excessive component temperatures.

Circuit Board Foil Repair

Excessive heat applied to the copper foil of any printed circuit board will weaken the adhesive that bonds the foil to the circuit board, causing the foil to separate from, or "lift-off," the board. The following guidelines and procedures should be followed whenever this condition is encountered.

In Critical Copper Pattern Areas

High component/copper pattern density and/or special voltage/current characteristics make the spacing and integrity of copper pattern in some circuit board areas more critical than in others. The circuit foil in these areas is designated as Critical Copper Pattern. Because Critical Copper Pattern requires special soldering techniques to ensure the maintenance of reliability and safety standards, contact your Hitachi personnel.

At IC Connections

To repair defective copper pattern at IC connections, use the following procedure to install a jumper wire on the copper pattern side of the circuit board. (Use this technique only on IC connections.)

1. Carefully remove the damaged copper pattern with a sharp knife. (Remove only as much copper as absolutely necessary.)

2. Carefully scratch away the solder resist and acrylic coating (if used) from the end of the remaining copper pattern.

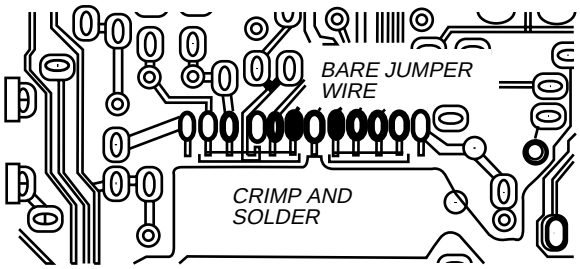

Install Jumper Wire and Solder

3. Bend a small "U" in one end of a small-gauge jumper wire and carefully crimp it around the IC pin. Solder the IC connection.

4. Route the jumper wire along the path of the cut-away copper pattern and let it overlap the previously scraped end of the good copper pattern. Solder the overlapped area, and clip off any excess jumper wire.

At Other Connections

Use the following technique to repair defective copper pattern at connections other than IC Pins. This technique involves the installation of a jumper wire on the component side of the circuit board.

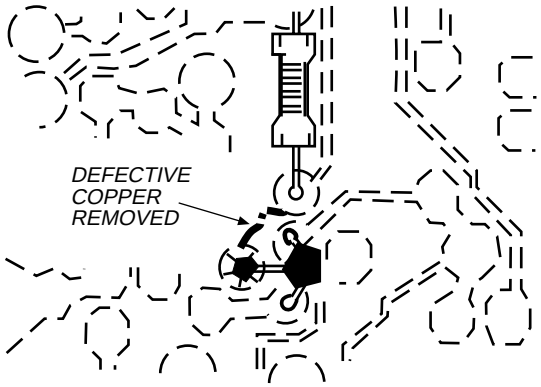

Insulated Jumper Wire

1. Remove the defective copper pattern with a sharp knife. Remove at least 1/4 inch of copper, to ensure hazardous condition will not exist if the jumper wire opens.

2. Trace along the copper pattern from both wire sides of the pattern break and locate the nearest component directly connected to the affected copper pattern.

3. Connect insulated 20-gauge jumper wire from the nearest component on one side of the pattern break to the lead of the nearest component on the other side. Carefully crimp and solder the connections.
   CAUTION: Be sure the insulated jumper wire is dressed so that it does not touch components or sharp edges.

Frequency Synthesis (FS) Tuning Systems

1. Always unplug the instrument AC power cord before disconnecting or reconnecting FS tuning system cables and before removing or inserting FS tuning system modules.

2. The FS tuner must never be disconnected from the FS tuning control module while power is applied to the instrument.

3. When troubleshooting intermittent problems that might be caused by defective cable connection(s) to the FS tuning system, remove the instrument AC power as soon as the defective connector is found and finish confirming the bad connection with a continuity test. This procedure will reduce the probability of electrical overstress of the FS system semi-conductor components.

NOTE: ***These components are affixed with glue. Be careful not to break or damage any foil under the component or at the pins of the ICs when removing. Usually applying heat to the component for a short time while twisting with tweezers will break the component loose.***

Leadless Chip Components (surface mount)

Chip components must be replaced with identical chips due to critical foil track spacing. There are no holes in the board to mount standard transistors or diodes. Some chip capacitor or resistor board solder pads may have holes through the board, however the hole diameter limits standard resistor replacement to 1/8 watt. Standard capacitors may also be limited for the same reason. It is recommended that identical chip components be used. .

Chip resistors have a three digit numerical resistance code -1st and 2nd significant digits and a multiplier. Example: 162 = 1600 or 1.6KΩ resistor, 0 = 0Ω (jumper).

Chip capacitors generally do not have the value indicated on the capacitor. The color of the component indicates the general range of the capacitance.

Chip transistors are identified by a two letter code. The first letter indicates the type and the second letter, the grade of transistor.

Chip diodes have a two letter identification code as per the code chart and are a dual diode pack with either

common anode or common cathode. Check the parts list for correct diode number.

Component Removal

1. Use solder wick to remove solder from component end caps or terminals.
2. Without pulling up, carefully twist the component with tweezers to break the adhesive.
3. Do not reuse removed leadless or chip components since they are subject to stress fracture during removal .

Chip Component Installation

1. Put a small amount of solder on the board soldering pads.
2. Hold the chip component against the soldering pads with tweezers or with a miniature alligator clip and apply heat to the pad area with a 30 watt iron until solder flows. Do not apply heat for more than 3 seconds

Chip Components

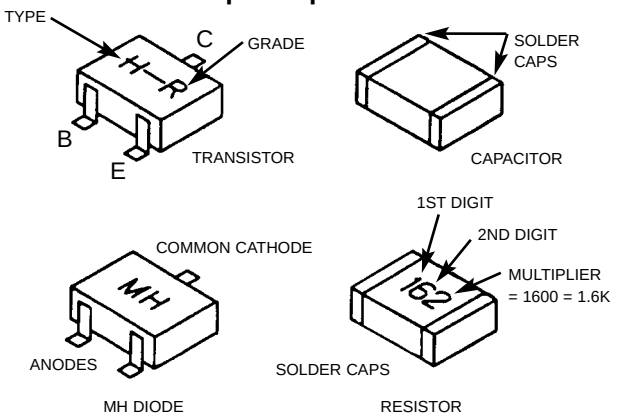

How to Replace Flat-IC —Required Tools—

- Soldering iron
- iron wire or small awl
- De-solder braids
- Magnifier

1. Remove the solder from all of the pins of a Flat-IC by using a de-solder braid.

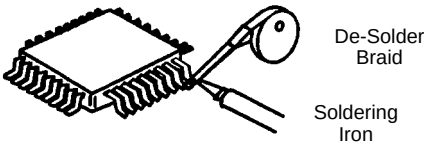

2. Put the iron wire under the pins of the Flat-IC and pull it in the direction indicated while heating the pins using a soldering iron. A small awl can be used instead of the iron wire.

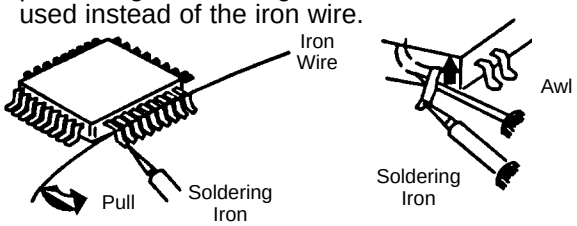

3. Remove the solder from all of the pads of the Fiat-IC by using a de-solder braid.

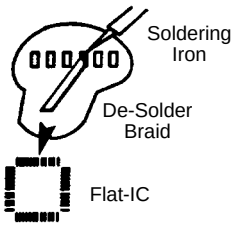

4. Position the new Flat-IC in place (apply the pins of the Flat-IC to the soldering pads where the pins need to be soldered). Properly determine the positions of the soldering pads and pins by correctly aligning the polarity symbol.

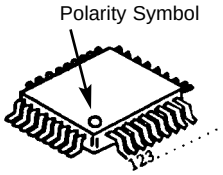

5. Solder all pins to the soldering pads using a fine tipped soldering iron.

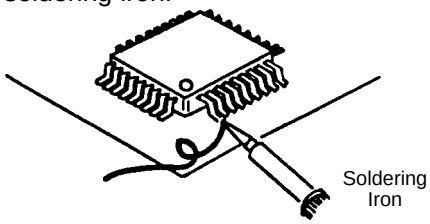

6. Check with a magnifier for solder bridge between the pins or for dry joint between pins and soldering pads. To remove a solder bridge, use a de-solder braid as shown in the figure below.

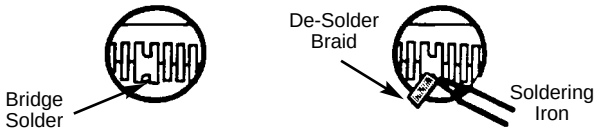

TECHNICAL CAUTIONS

High Voltage limiter circuit operation check.

1. Turn off TV and connect jig as shown in Figure 2. Adjust jig fully counter-clockwise for minimum resistance.
2. Set the AC input to 120V AC and turn on TV.
3. Confirm test pattern on CRT is a usable picture, then slowly adjust jig until the picture disappears and TV shuts down.
4. When the limiter circuit is operating properly, High Voltage will be less than 31.5 kV at 1.7mA when TV shuts down.
5. Turn off set immediately after checking circuit operation.
6. Unplug set for one minute to reset shutdown circuit. Remove jig and voltmeter.

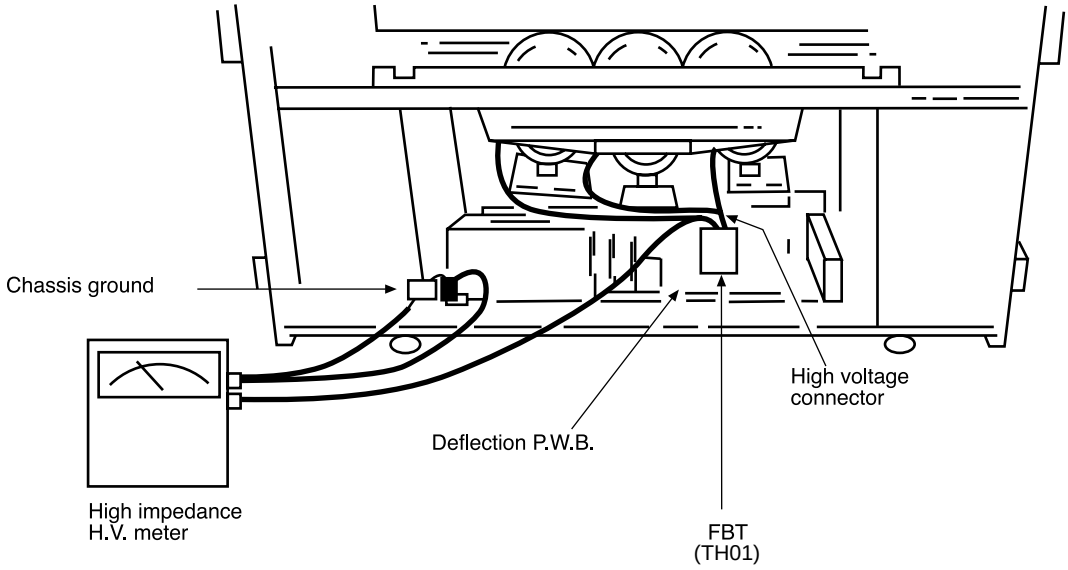

AC CORD POLARITY

This check is based on the UL standard. Use the jigs specified by the production technology section. The GND side (wider blade) of the AC power cord should be connected to K9Y1

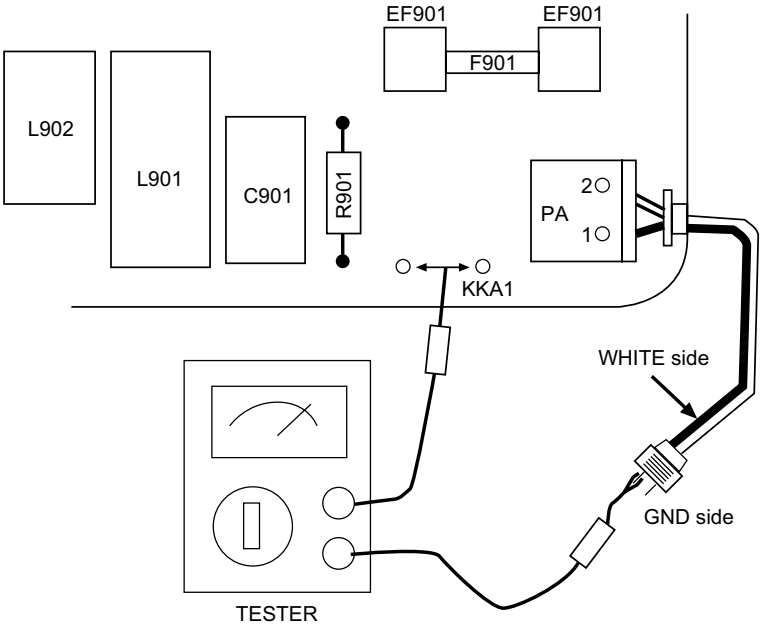

SPECIFICATIONS

Model: 43FDX10B 53UDX10B
43FDX11B 61UDX10B

Cathode-Ray Tube:

53UDX10B/61UDX10B
R=P16LFM00RFA(TU)
G=P16LFM00HHA(TU)
B=P16LFM00BMB(TU)

43FDX10B/43FDX11B
R=P16LTG00RFA
G=P16LTG00HHA
B=P16LTG00BMB

Power Input: 120 volts AC, 60 Hz

Power Consumption:
- Stand-By Power
  43FDX10B/43FDX11B 2.7W
  53UDX10B/61UDX10B 2.7W
- Power Consumption (operating)
  43FDX11B/43FDX10B 225W
  53UDX10B/61UDX10B 216W
- Power Consumption (maximum)
  43FDX11B/43FDX10B 265W
  53UDX10B/61UDX10B 253W

Antenna Impedance: 75 Ohm Unbalanced
VHF / UHF / CATV

Receiving Channel:

BAND	CH
VHF	2~13
UHF	14~69
EXT. Mid	(A-5)~(A-1), 4+
CATV Mid.	A~I
CATV Super	J~W
CATV Hyper	(W+1)~(W+28)

Intermediate Frequency: Picture I-F Carrier 45.75 MHz
Sound I-F Carrier 41.25 MHz
Color Sub Carrier 42.17 MHz

Video Input: 1 Volt p-p, 75 Ohm

Video Output: 1 Volt p-p, 75 ohm

Audio Input: 470 mVrms, 47 k Ohm

Stereo Audio Output: 470 mVrms, 1 k Ohm

Audio Output Power:
Front: 12 watts per channel at 10% distortion,
8 ohm Impedance. Max output – 15 watts.

Anode Voltage:
30.2±0.2kv (1.32±0.2mA)

Brightness:	**43**	**53**	**61**
(white screen)	250cd/m^2	170cd/m^2	150cd/m^2

Speakers: 2 Woofers - 5 inch (120 mm) round
2 Tweeters - 2 inch (50 mm) round

Dimension:

	43”	53”	61”
Height (in.)	43 $^5/_8$	51 $^5/_8$	61 $^1/_8$
Width (in.)	38 $^{15}/_{16}$	46	52 $^3/_8$
Depth (in.)	20 $^1/_{16}$	25 $^5/_{16}$	28 $^7/_8$
Weight (lbs.)	148	225	283

Circuit Board Assemblies:

C.P.T. (B) P.W.B.	Terminal A P.W.B.
C.P.T. (G) P.W.B.	Terminal B P.W.B.
C.P.T. (R) P.W.B.	VM P.W.B.
Audio Out P.W.B.	Surround P.W.B.
2H P.W.B.	Power Deflection P.W.B.
Power Supply P.W.B.	Control P.W.B.
Signal P.W.B.	Control Sub P.W.B.
Convergence P.W.B.	Sensor Distribution P.W.B.

CIRCUIT PROTECTION

CAUTION: Below is an EXAMPLE only. See Replacement Parts List for details. The following symbol near the fuse indicates fast operation fuse (to be replaced). Fuse ratings appear within the symbol.

Example:

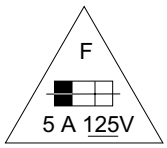

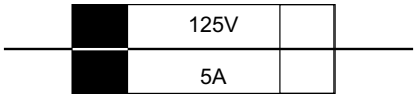

RISK OF FIRE - REPLACE FUSE AS MARKED

The rating of fuse F901 is 5A - 125V.
Replace with the same type fuse for continued protection against fire.

CAUTIONS WHEN CONNECTING / DISCONNECTING THE HV CONNECTOR

Perform the following when the HV connector (anode connector) is removed or inserted for CPT replacement, etc.

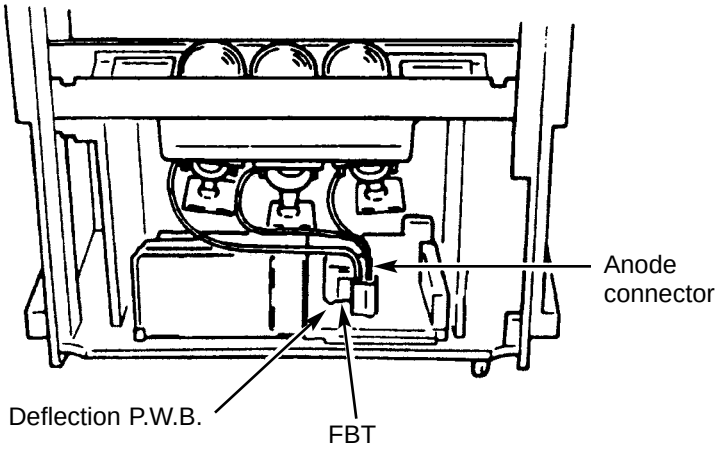

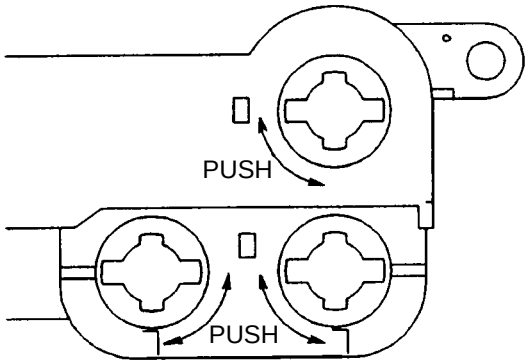

Fig. A

During Removal

1. Roll out silicon cover from FBT's contact area slowly.
2. While turning the connector about 90 degrees following the arrow (0 position), push the connector slightly towards the case. (Fig. A)
3. Remove the connector slowly by pulling it away from the case.

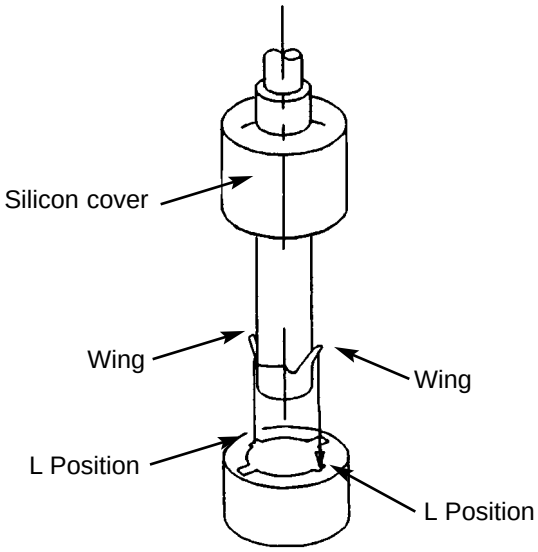

Fig. B

During Insertion

1. Please refer to direction for insertion as shown in Fig. B (L position). Insert connector until "CLICK" sound is heard.
2. Make sure the connector is pressed right in, so that it has a good contact with the spring.
3. Confirm the contact by pulling the connector slightly. (Don't pull hard because it may damage the connector).
4. Cover the high voltage output by carefully pushing silicon cover onto it. (Don't turn the connector).

(REMARK)

1. Make sure the silicon cover is covering the high voltage output.

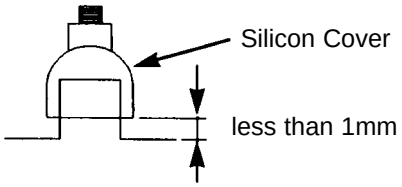

GENERAL INFORMATION

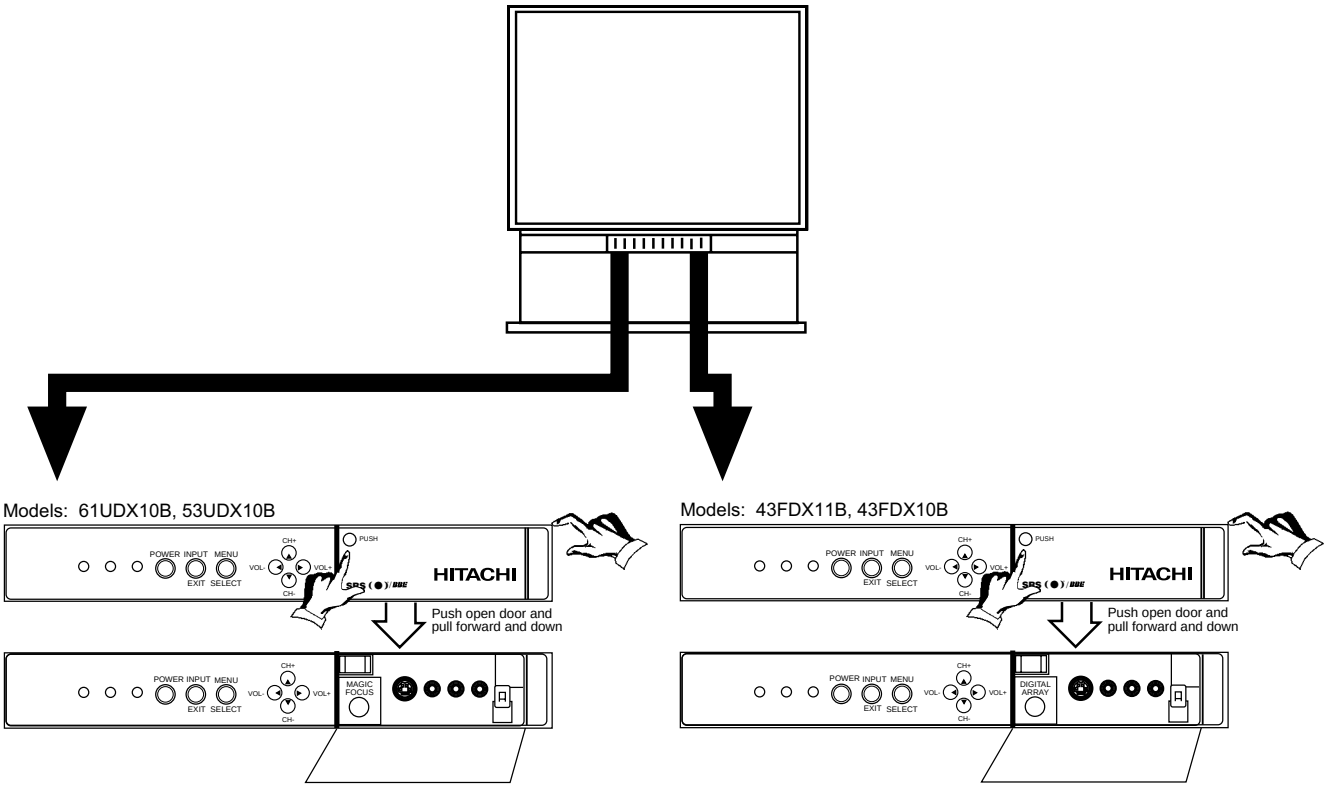

Fig. 3. Front Control Panel

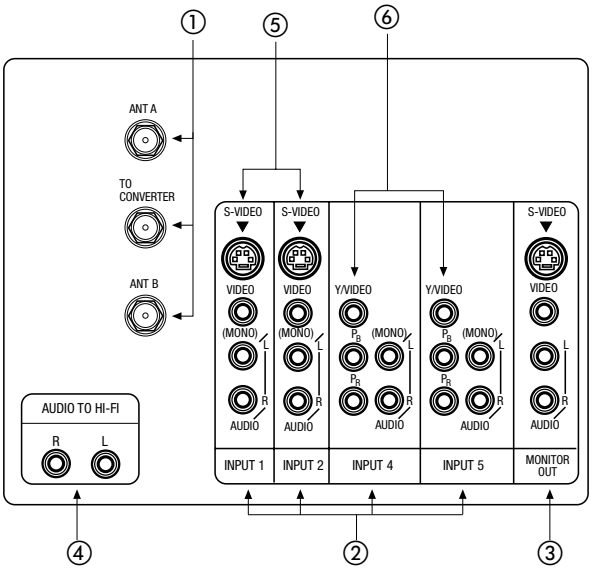

Fig. 4. Rear Panel Jacks

① Antenna Input/Output

② Audio/Video Inputs 1, 2, 4, 5

③ Monitor Out

④ Audio to Hi-Fi

⑤ S-Video Inputs 1 and 2

⑥ Component Input Y-P_BP_R

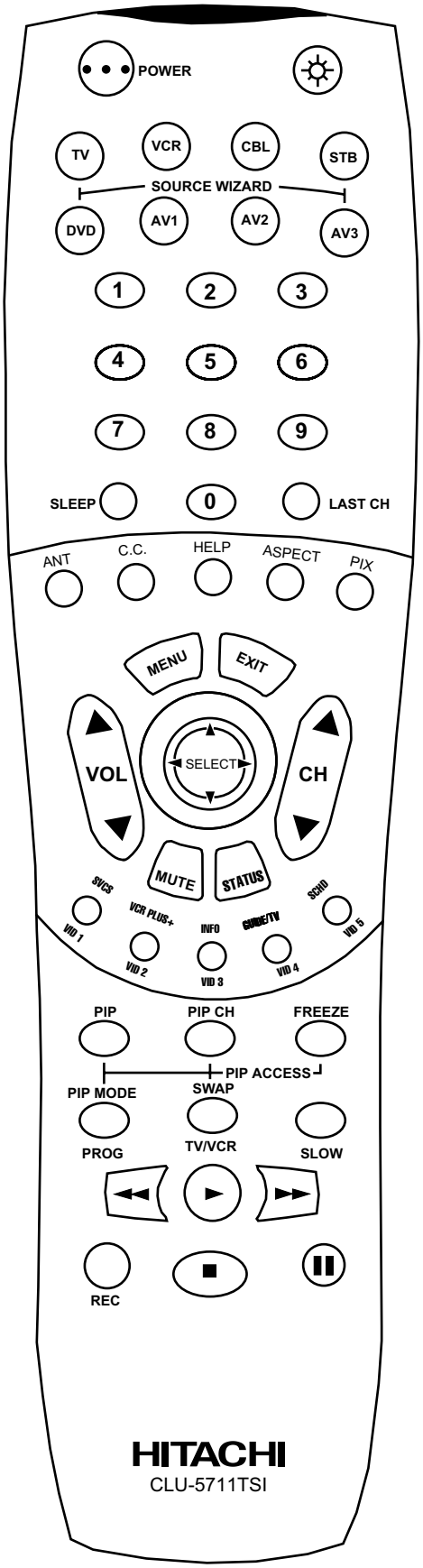

CLU-5711TSI

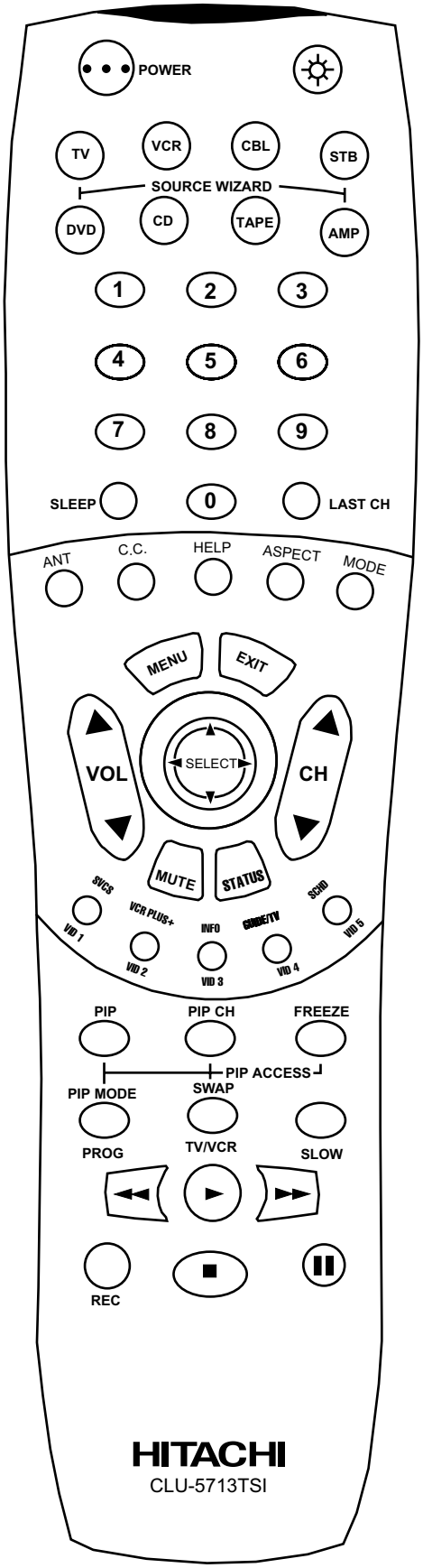

CLU-5713TSI

CUSTOMIZED PICTURE AND SOUND ADJUSTMENTS

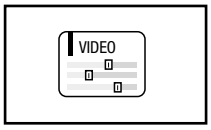

Select VIDEO to adjust picture settings and improve picture quality.

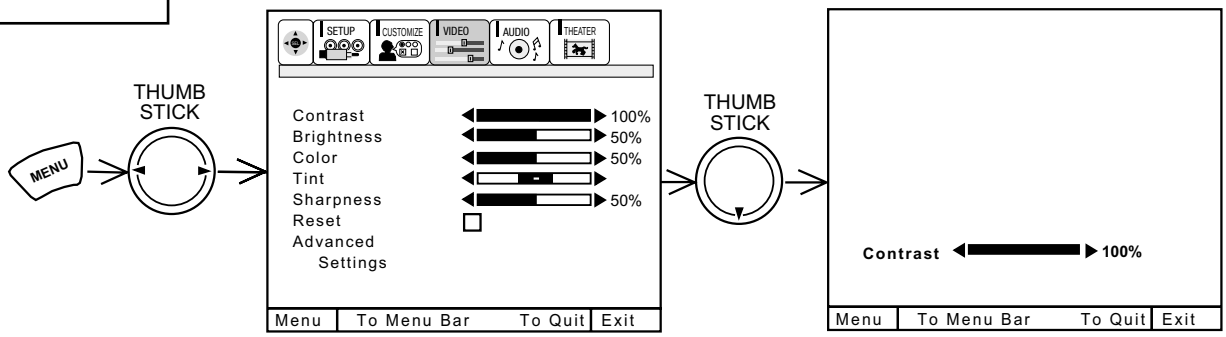

Use the THUMB STICK ▲ or ▼ to highlight the function to be adjusted.
Press the THUMB STICK ◀ or ▶ to adjust the function.
Press EXIT to quit menu.

CONTRAST	Use this function to change the contrast between black and white levels in the picture. This adjustment will only affect the picture when ADVANCED SETTINGS PERFECT PICTURE is OFF.
BRIGHTNESS	Use this function to adjust overall picture brightness.
COLOR	Use this function to adjust the level of color in the picture.
TINT	Use this function to adjust flesh tones so they appear natural. (See notes below.)
SHARPNESS	Use this function to adjust the amount of fine detail in the picture.
RESET	When RESET is selected, press down on THUMB STICK ▶ to return video adjustments to factory preset conditions.

NOTE:
1. It may be necessary to adjust TINT to obtain optimum picture quality when using the COMPONENT: Y-P_BP_R Input jacks.
2. If you are using the COMPONENT VIDEO input jacks (Y-P_BP_R) and notice that the TINT and COLOR are abnormal, check to make sure that COMPONENT SET-COLOR SYSTEM is set properly.

MAGIC FOCUS
The Magic Focus button on the front panel will align the convergence when pressed.

Press the front panel MAGIC FOCUS button momentarily for auto setup.

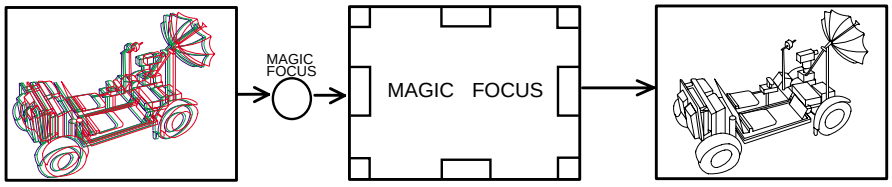

Select AUDIO to adjust the TV to your preference and to improve the sound quality.

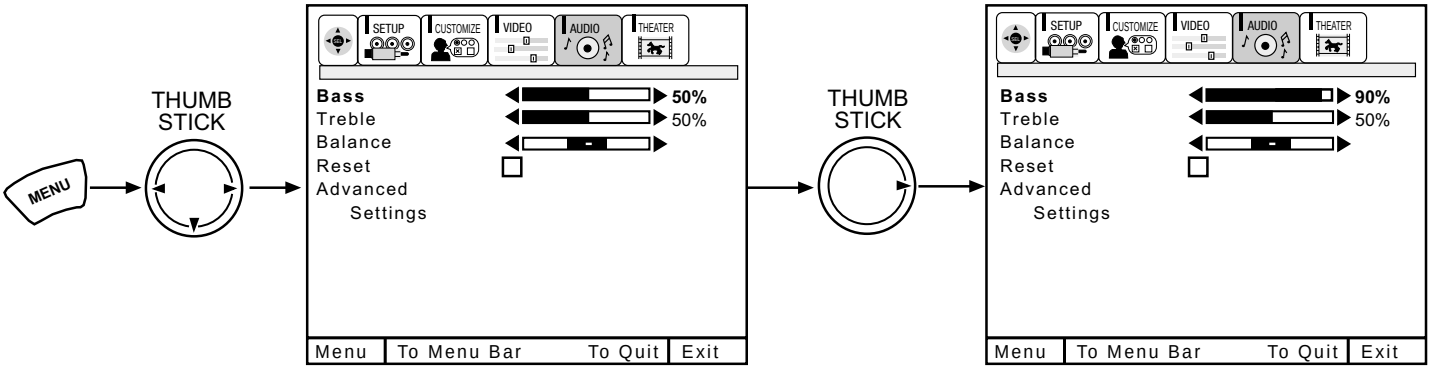

Use THUMB STICK ▲ or ▼ to highlight the function to be adjusted.
Press THUMB STICK ◀ or ▶ to adjust the function.
Press EXIT to quit MENU.

NOTE: If BASS is selected you are adjusting BASS. The additional menu items TREBLE and BALANCE can be selected and adjusted in the same manner.

BASS	This function controls the low frequency audio to all speakers.
TREBLE	This function controls the high frequency audio to all speakers.
BALANCE	This function will control the left to right balance of the TV internal speakers and the AUDIO TO HI FI output.
RESET	When RESET is selected, press CURSOR ▶ to return audio adjustments to factory preset conditions.

TYPICAL FULL-FEATURE SETUP

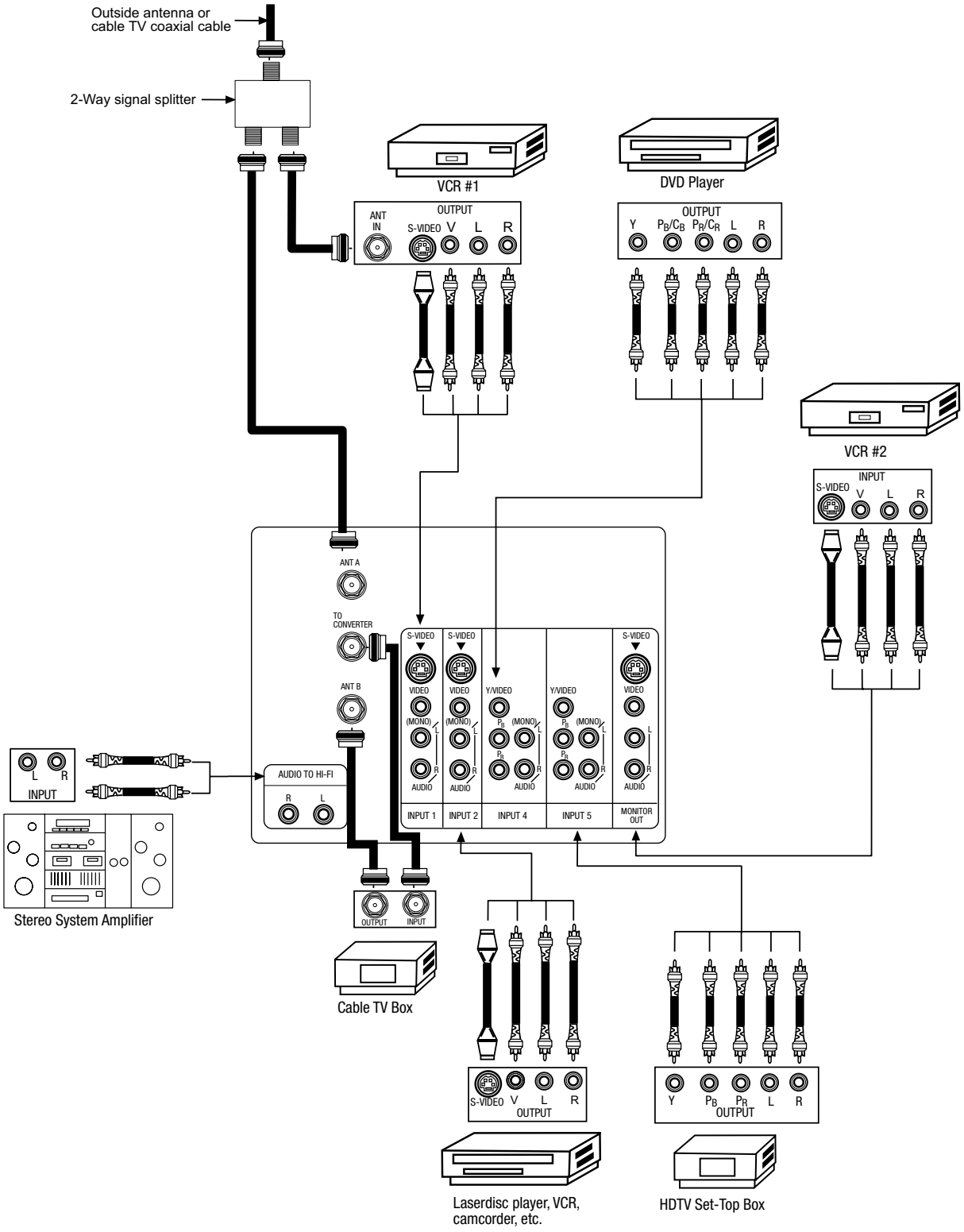

NOTE:
1. Connect only 1 component to each input jack.
2. Follow connections that pertain to your personal entertainment system.

CONNECTING A COMPONENT SOURCE TO VIDEO 4 OR 5: Y-P_BP_R.

1. Connect the cable from the Y OUT of the Laserdisc/DVD player or HDTV set top box to the INPUT (Y) jack, as shown on the TV set below.
2. Connect the cable from the C_B/P_B OUT or B-Y OUT of the Laserdisc/DVD player or HDTV set top box to the INPUT (P_B) jack.
3. Connect the cable from the C_R/P_R OUT or R-Y OUT of the Laserdisc/DVD player or HDTV set top box to the INPUT (P_R) jack.
4. Connect the cable from the AUDIO OUT R of the Laserdisc/DVD player or HDTV set top box to the INPUT (AUDIO/R) jack.
5. Connect the cable from the AUDIO OUT L of the Laserdisc/DVD player or HDTV set top box to the INPUT (AUDIO/L) jack.
6. Press the VID4~VID5 button, to view the program from the Laserdisc/DVD player or HDTV set top box. The VIDEO icon disappears automatically after approximately eight seconds.
7. Press the ANT button to return to the previous channel.

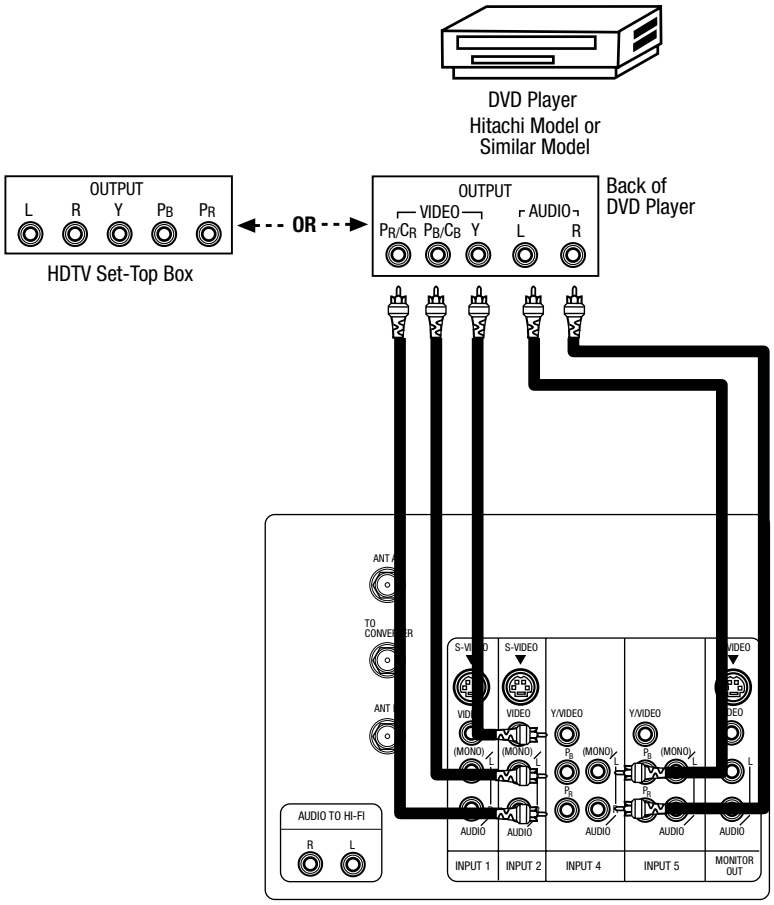

Rear Panel of Television

NOTE:
1. You may use standard video signal for INPUT:4 and 5.
2. Completely insert the connection cord plugs when connecting to rear panel jacks. The picture and sound that is played back will be abnormal if the connection is loose.
3. See page 17 for tips on REAR PANEL CONNECTIONS.

CONNECTING EXTERNAL VIDEO SOURCES

CONNECTING AN S-VIDEO SOURCE TO INPUT 1, 2 AND 3

1. Connect the cable from the S-VIDEO OUT of the VCR or the laserdisc player to the INPUT (S-VIDEO) jack, as shown on the TV set below.

2. Connect the cable from the AUDIO OUT R of the VCR or the laserdisc player to the INPUT (AUDIO/R) jack.

3. Connect the cable from the AUDIO OUT L of the VCR or the laserdisc player to the INPUT (AUDIO/L) jack.

4. Press the VID1~VID3 button to view the program from the VCR or laserdisc player. The VIDEO icon disappears automatically after approximately eight seconds.

5. Press the ANT button to return to the previous channel.

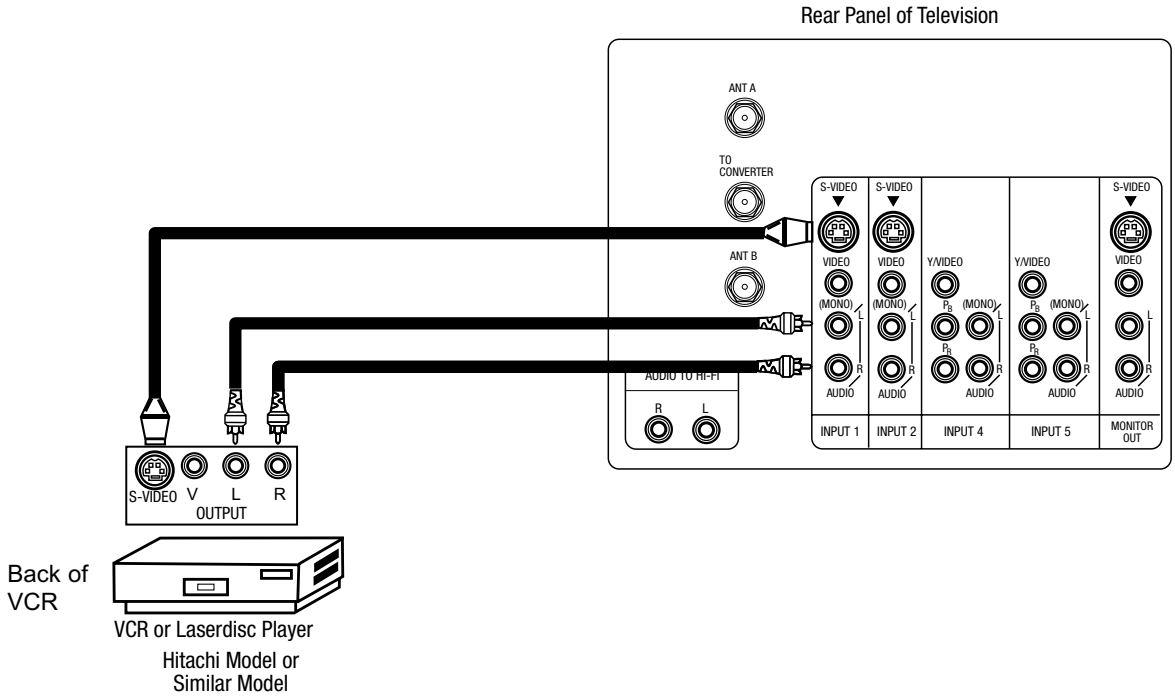

NOTES:

1. Completely insert the connection cord plugs when connecting to rear panel jacks. The picture and sound that is played back will be abnormal if the connection is loose.

2. A single VCR can be used for VCR #1 and VCR #2, but note that a VCR cannot record its own video or line output. Refer to your VCR operating guide for more information on line input-output connections.

CONNECTING EXTERNAL VIDEO SOURCES

CONNECTING A STEREO SOURCE TO INPUT1~INPUT5

1. Connect the cable from the VIDEO OUT of the VCR or the laserdisc player to the INPUT (VIDEO) jack, as shown on the TV set below.

2. Connect the cable from the AUDIO OUT R of the VCR or the laserdisc player to the INPUT (AUDIO/R) jack.

3. Connect the cable from the AUDIO OUT L of the VCR or the laserdisc player to the INPUT (AUDIO/L) jack.

4. Press the VID1~VID5 button to view the program from the VCR or laserdisc player. The VIDEO icon disappears automatically after approximately eight seconds.

5. Press the VID1~VID5 button to return to the previous channel.

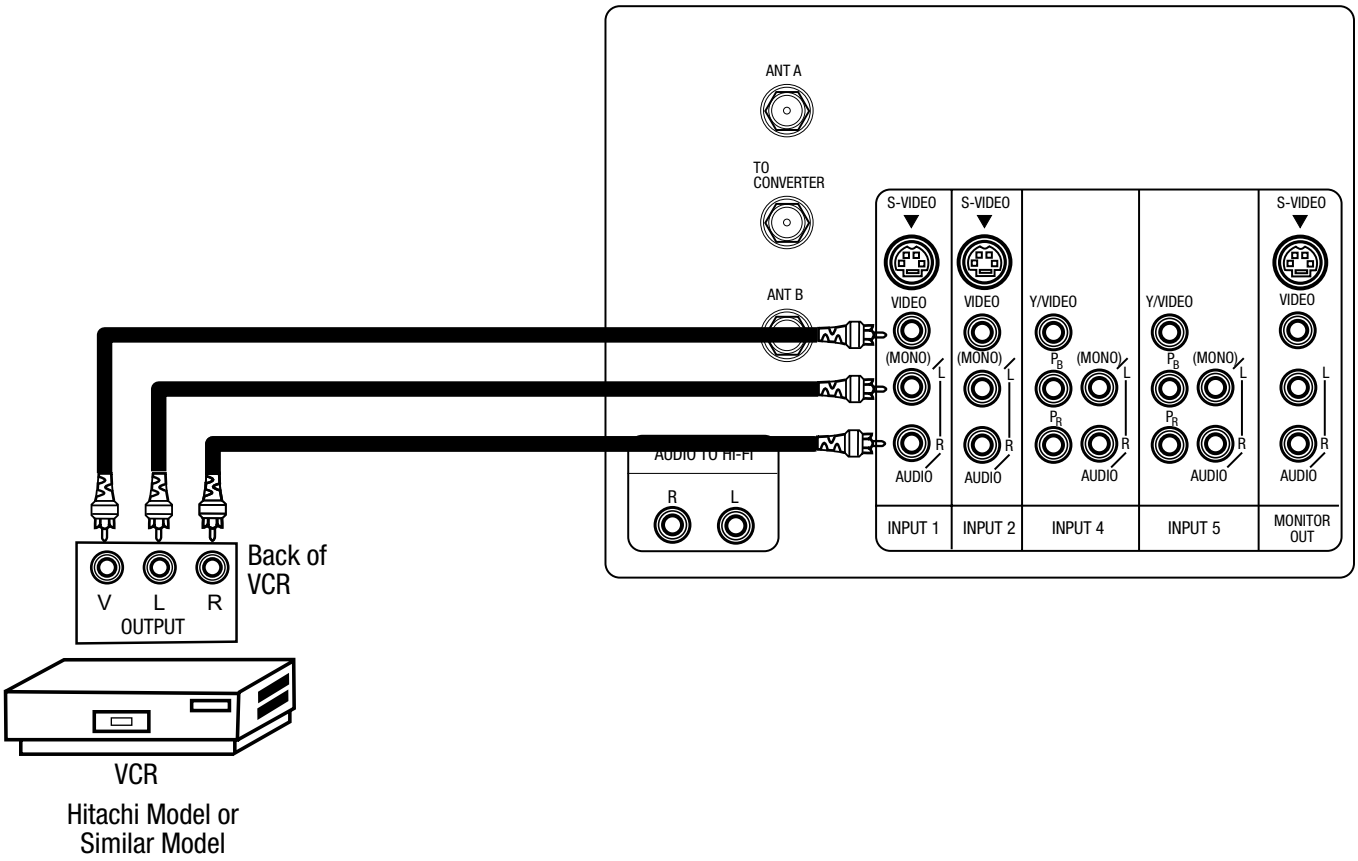

NOTES:

1. Completely insert the connection cord plugs when connecting to rear panel jacks. The picture and sound that is played back will be abnormal if the connection is loose.

2. A single VCR can be used for VCR #1 and VCR #2, but note that a VCR cannot record its own video or line output. Refer to your VCR operating guide for more information on line input-output connections.

FEATURE INFORMATION

As the digital era dawns, Hitachi has models that provide the best possible images today...and tomorrow. Our HDTV Ready model incorporates new Flex Converter technology to display a high quality 720P (high definition scanning) or 480P (progressive scanning) image; this same circuitry enables it to accept a full 1080i HDTV signal from a digital set-top box now or in the future.

FLEX CONVERTER TECHNOLOGY

With current analog broadcasts, there is just one level of picture quality. In the new age of digital TV, there will be several levels. The highest, called HDTV, can be as high as 1080i.The next level, called HDTV, can be 720P. The standard level, SDTV, can be 480P or 480i. Hitachi has developed the Flex Converter, advanced circuitry that allows your UltraVision FDX and UDX series television to produce true 1080i HDTV resolution with an HDTV set-top box. It converts analog 480i signals to the higher-quality 540P signals with no scan lines or flicker. The FDX and UDX needs a set-top box to receive any Digital Signal.

COMPONENT VIDEO

Component Video inputs accept separate blue, red & B/W signals from a high resolution digital source as DVD or digital set-top box to provide a higher resolution picture.

3DYC (DIGITAL 3DYC COMB FILTER)

The Digital 3DYC Comb Filter analyzes three lines of information from a single video frame as well as lines from adjacent frames. This technology eliminates the flickering that a detailed pattern or scene would normally cause, for the cleanest, neatest picture possible.

PROGRESSIVE SCANNING

A standard TV uses Interlaced Scanning where each frame of video is broken into two fields, each providing alternating scan lines. This can leave noticeable scan lines and cause flickering. With Progressive Scanning, complete frames are displayed for a smoother picture with no scan lines and no flicker. This allows you to get the optimal picture quality from today's high resolution digital sources such as DVD or a digital set-top box.

PICTURE FORMATS

The PICTURE FORMATS function is very useful when setting up reception High Definition, Standard Definition and NTSC signals.

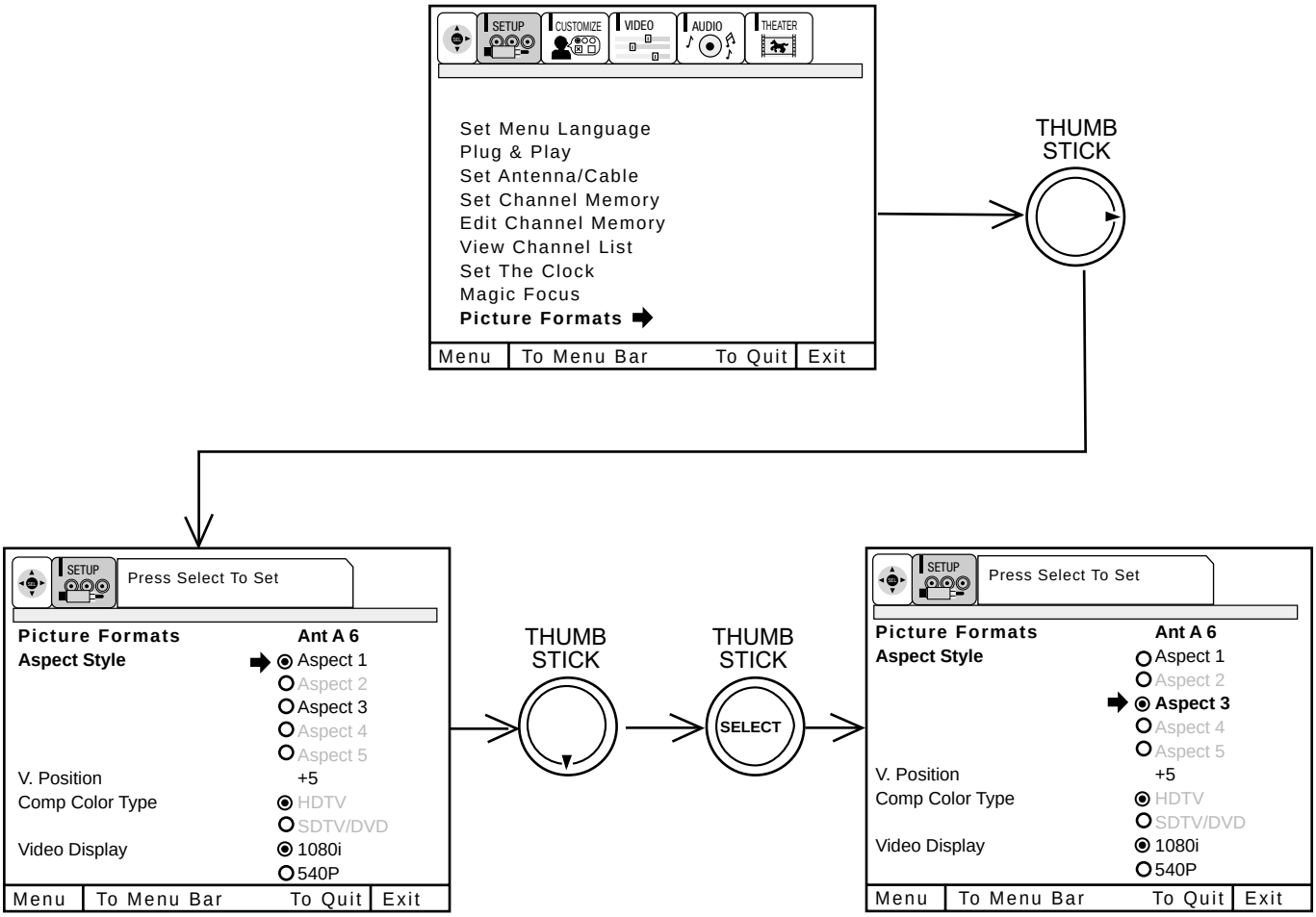

V. Position
Adjust this when viewing a COMPONENT: Y-P_BP_R signal. This feature is used to center an HDTV video signal between the top and bottom gray bars. Adjustable range is -10 (video center is toward bottom of screen) to +10 (video center is toward top of screen).

Press THUMB STICK ▲ or ▼ to highlight then press down on THUMB STICK to select.
Press EXIT to quit menu or THUMB STICK ◀ to return to previous menu.

NOTE:

1. Depending on the input signal, some of the Aspect features will be grayed out. This means that the feature is not available with the signal input.

2. Set up a Component Signal (connect component to Y-P_BP_R inputs) and switch to VIDEO: 4 or 5 by pressing the Video:4 or 5 button on the Remote Control when planning to use all Picture Formats feature.

   Aspect 1 - Display the actual (normal 4x3 or 16x9) inputted signal mode.
   Aspect 2 - Stretch the signal to 16x9 format.
   Aspect 3 - Zoom in on Aspect 1 mode.
   Aspect 4 - Zoom in on Aspect 2 mode.
   Aspect 5 - When 1080i signal is inputted, this is the true 1080i signal.

Picture Formats

Depending on the input signal, the PICTURE FORMAT aspect ratio allows you to adjust the image through the following options.

(1) NTSC Input - ANT A/B, VID1 ~ VID5, - 4x3 Format

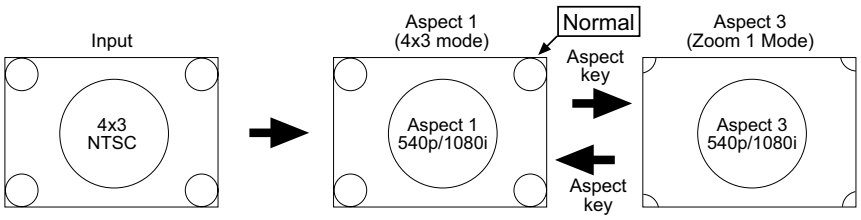

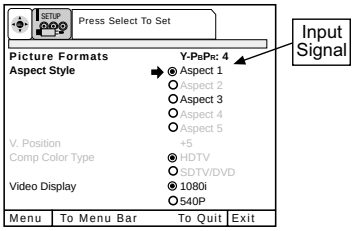

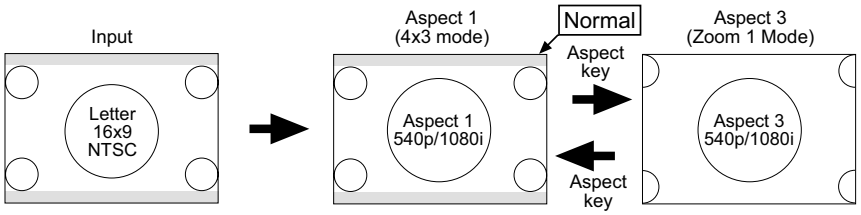

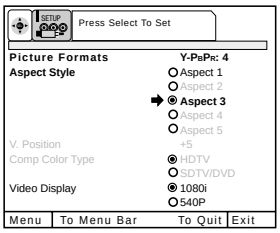

(2) 480i Input - ANT A/B, Input 4/5 (Component) - 4x3 Format

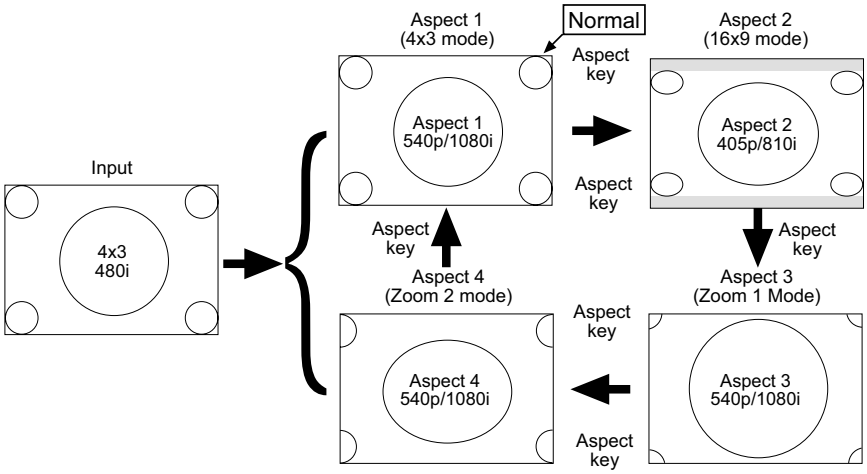

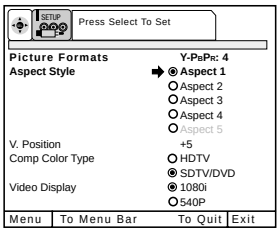

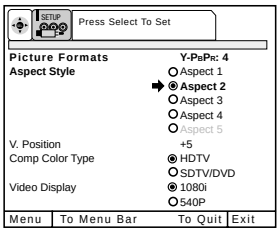

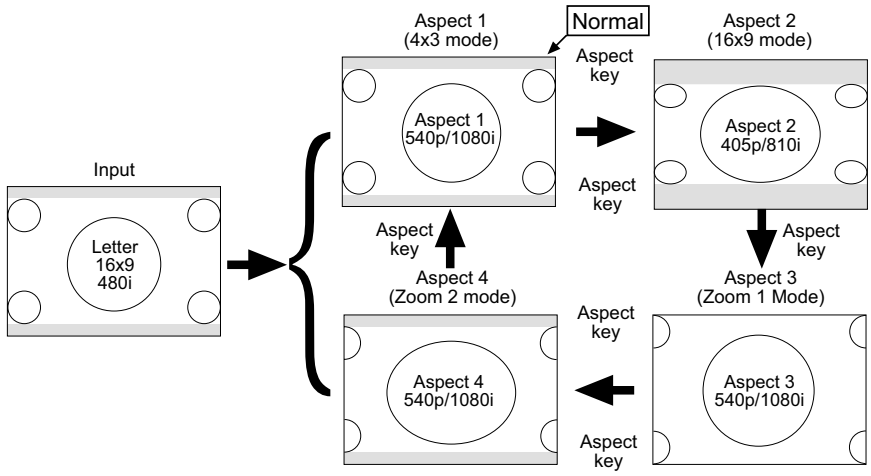

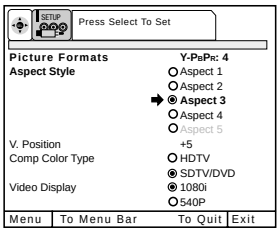

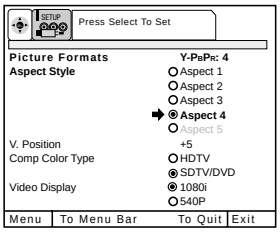

(3) 480p Input - Input 4/5 (Component) - 4x3 Format

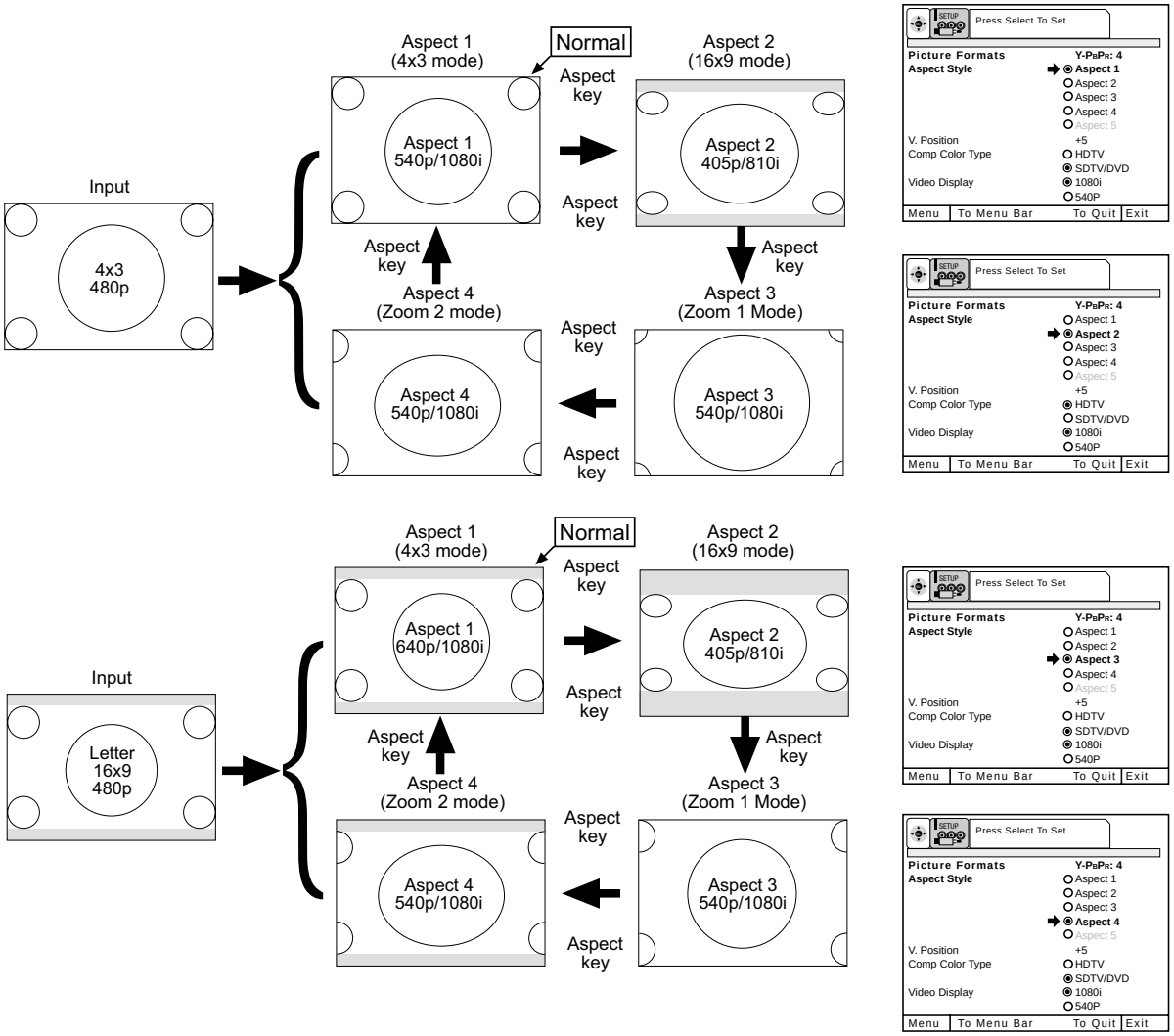

Comp Color Type

The Comp Color Type function allows you to automatically change tint and color coordinate for DTV Programs.

HDTV - High Definition Television - Use for High Vision Signal Y-P_BP_R from HDTV Set-Top Box.

SDTV /DVD - Standard Definition Television or Digital Video Disc Y-C_BC_R such as DVD (Digital Video Disc Player).

Video Display

The video display feature allows you to select between 1080i or 540P signal display.

NOTE:

1. If Comp Color Type is set improperly (does not match actual input signal), the color and tint of the main picture will be abnormal.
2. You must be tuned to VIDEO: 4 or 5 input and have a component hooked up to the Y-P_BP_R input jacks to access all Picture Formats menu.
3. All settings will affect only the component input you are currently viewing. If you are using both sets of component input jacks, be sure to set the Picture Formats feature for both inputs (set VIDEO:4 AND VIDEO:5).

DISPLAY FORMAT OF COMPONENT VIDEO TERMINAL (YCBCR/YPBPR).

SDTV SIGNAL FORMAT: SMPTE-170M
HDTV SIGNAL FORMAT: ITU-R709, SMPTE-274M
4X3 MODEL

1. NORMAL MODE
(1) NTSC: 480i 4x3 (15.75kHz) ⟶ 540P/1080i (33.75kHz)

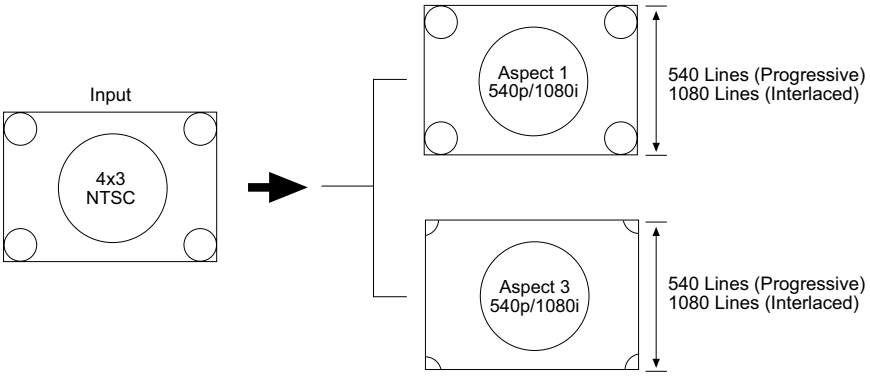

(2) SDTV: 480i 4x3 (15.75kHz) ⟶ 540P/1080i (33.75kHz)

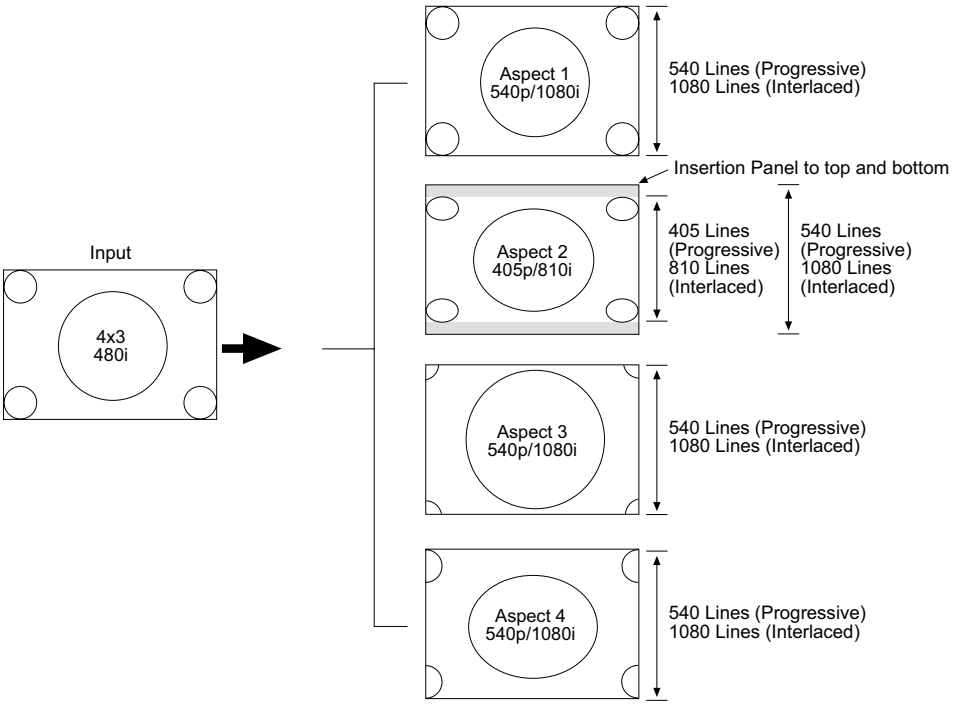

(3) SDTV: 480i 16X9 (15.75KHz) → 540P/1080i (33.75KHz)

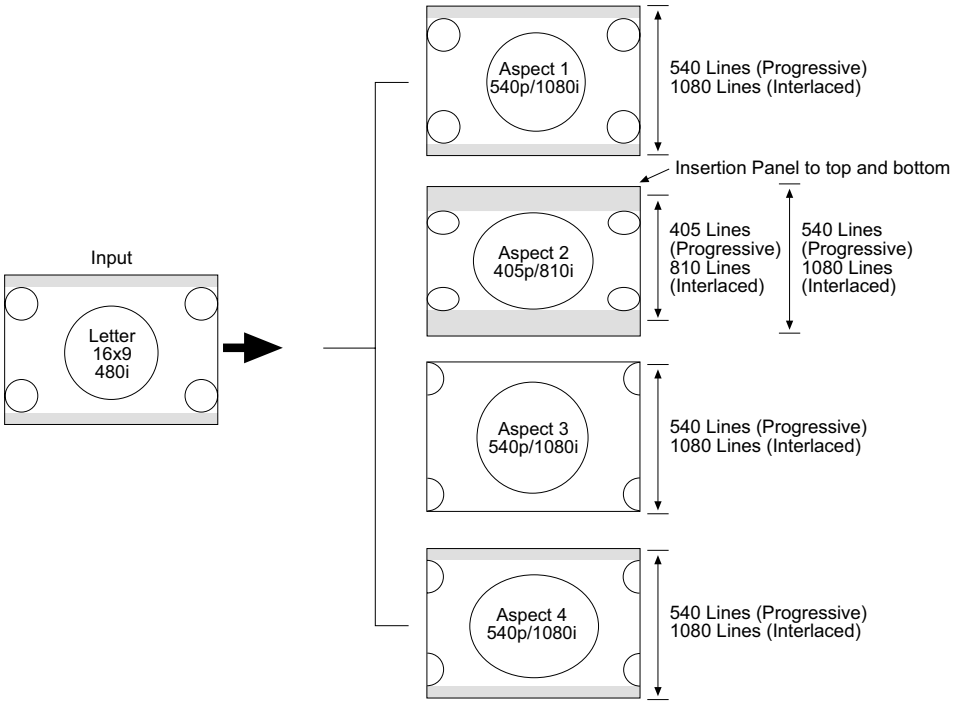

(4) SDTV: 480P 4x3 (31.5KHz) → 540P/1080i (33.75KHz)

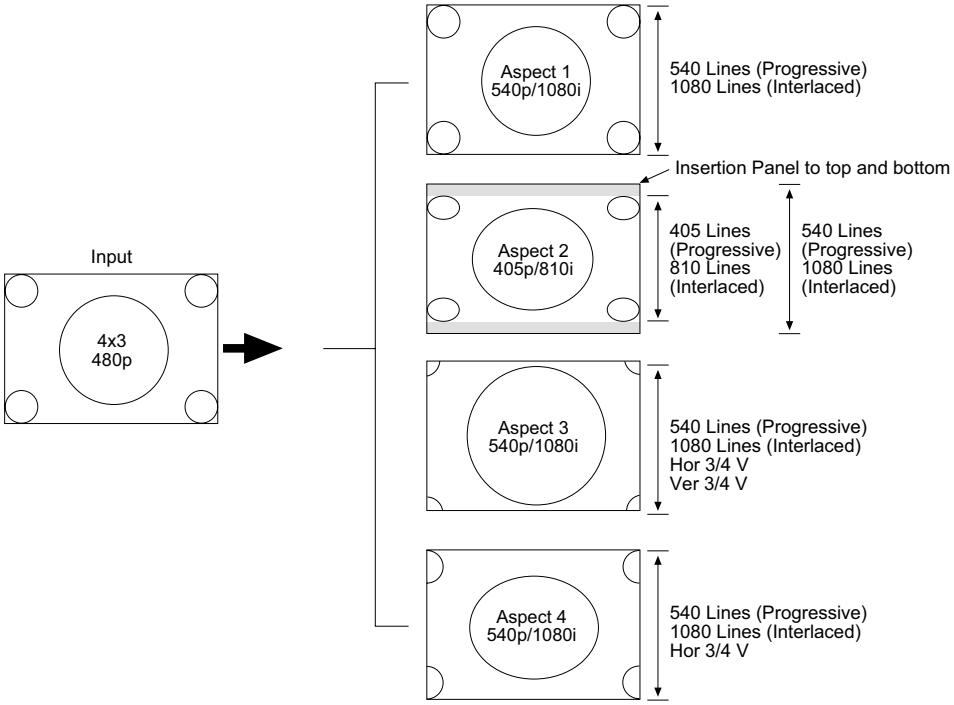

(5) SDTV: 480P 16X9 (31.5KHz) ⟶ 540P/1080i (33.75KHz)

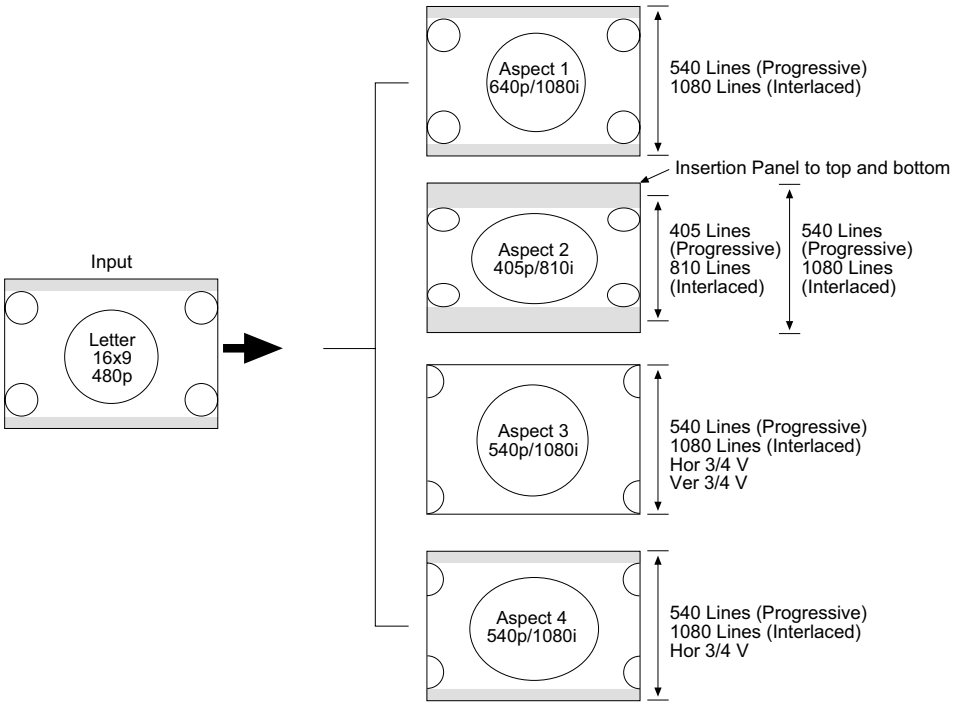

(6) HDTV: 720P 16x9 (33.75KHz) ⟶ 540P/1080i (33.75KHz)

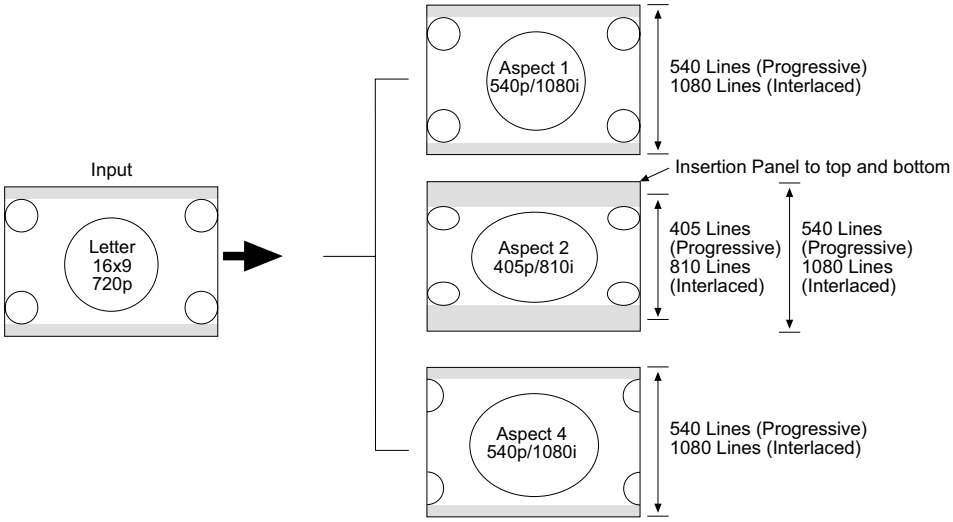

(7) HDTV: 1080i 16X9 (33.75KHz) ⟶ 1080i 4x3 (33.75KHz)

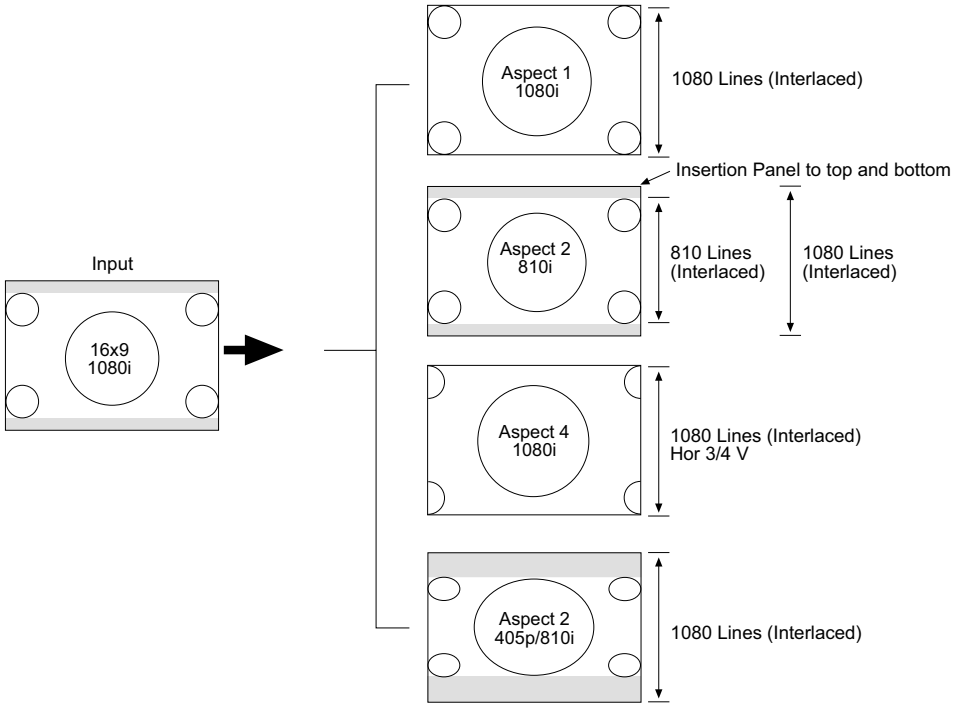

(8) Surf/Strobe Mode NTSC ⟶ 540P 4x3 (33.75KHz)

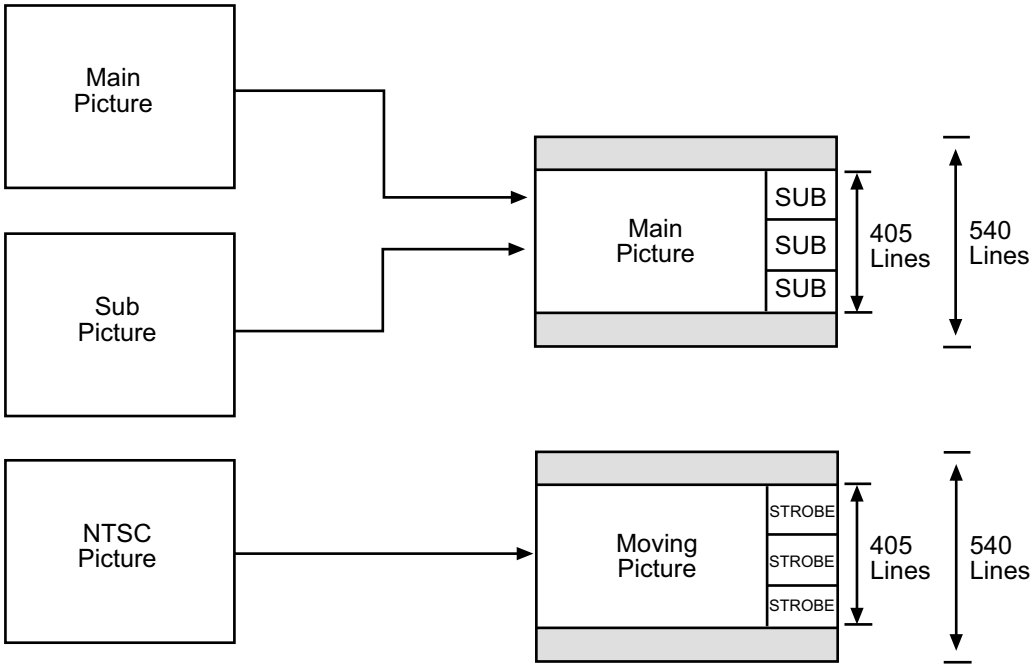

(9) Single Mode NTSC/480i ⟶ 540P 4x3 (33.75KHz)

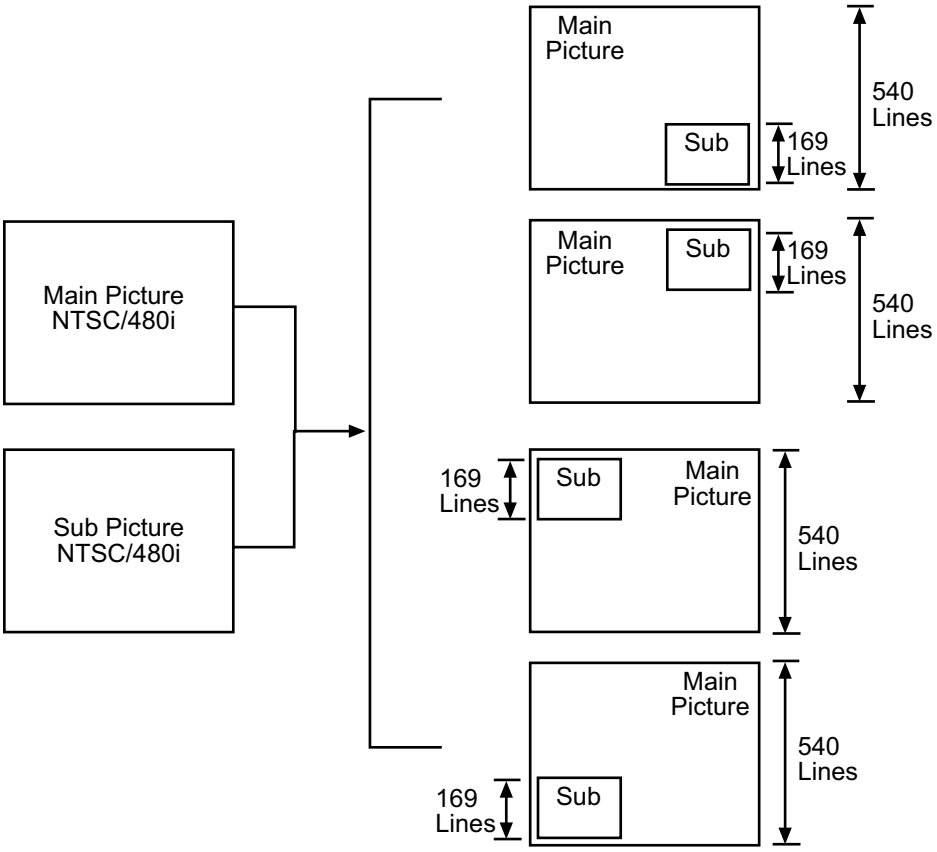

(10) Surf/Strobe Mode NTSC/480i ⟶ 540P 4x3 (33.75KHz)

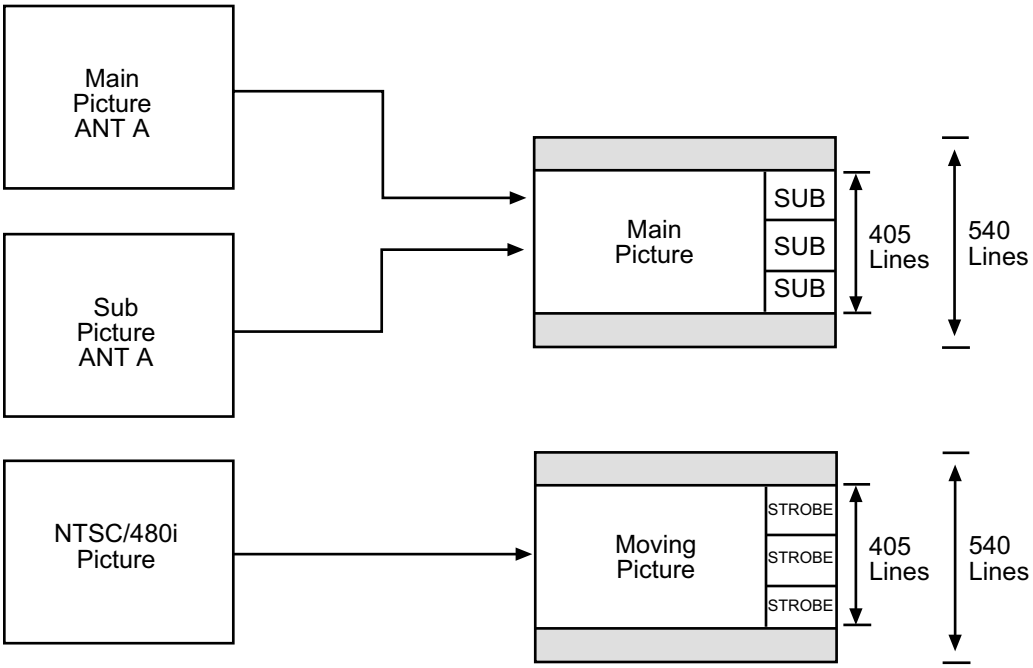

SERVICE ADJUSTMENTS

1. ASSEMBLED P.W.B ADJUSTMENT 31
1-1. Service Menu Access (NTSC, SDTV and HDTV) 31
1-2. Comb Filter Operation Check 39
1-3. Audio Operation Check 39
1-3-1. Tone Control Operation Check 39
1-3-2. Perfect Volume Operation Check 39
1-3-3. SRS Surround Operation Check 39
1-3-4. BBE Surround Operation Check 39
1-4. High Voltage Adjustment 40

2. FINAL ASSEMBLY ADJUSTMENT (Adjustment should be according to below order) 40
2-1. Cut Off Adjustment 40
2-2. DCU Phase Data Setting (Normal and 1080i Throught mode) 40
2-3. Horizontal Position Adjustment (Coarse) 41
2-4. Raster Tilt (Deflection Yoke) 41
2-5. Beam Alignment 41
2-6. Raster Position 42
2-7. Vertical Size (Normal Mode Only) 42
2-8. Horizontal Size (Normal Mode Only) 42
2-9. Beam Form 43
2-10. Lens Focus 43
2-11. Static Focus 45
2-12. Digital Convergence (Normal and 1080i Throught mode) 45
2-12-1. Magic Focus Character Set Up 46
2-12-2. Magic Focus Pattern Set Up 47
2-12-3. Convergence Jig Screen Specification 48
2-12-4. Raster Position Adjsutment 49
2-12-5. Convergence Point Adjustment 49
2-13. Blue Defocus 51
2-14. White Balance 51
2-15. Sub Brightness 52
2-16. Sub-Picture Siganl Amplitude Adjustment 54
2-17. Horizontal Position (Normal and 1080i Throught mode) 55
2-18. Scanning Area Check (Normal and 1080i Throught mode) 55
2-19. Raster Distortion Check (Normal and 1080i Throught mode) 56

3. ADJUSTMENT POINT 58
3-1. CRT (R)(G)(B), Cabinet Locations 58
3-2. Main Chassis (Signal P.W.B.) 59
3-3. Main Chassis (Power/Deflection P.W.B.) 60
3-4. Power Supply P.W.B. 62
3-5. CPT (R)(G)(B), Focus Pack, Control P.W.B. 63

***IMPORTANT**

For many of the above adjustments, it is necessary to have an HDTV (1080i or 720P) signal generator, SDTV (480P) signal generator, as well as the usual NTSC (480i) signal generator.

Hitachi recognizes that few companies offer HDTV or SDTV signal generators and that the cost of these generators is sometimes prohibitive. For this reason, we suggest the use of a set-top-box for HDTV and SDTV adjustments. Usually, there is a switch on the set-top-box which enables it to output HDTV (1080i or 720P) or SDTV (480P) signals even with no input. In this case, the sync is automatically detected by the TV (at the Y-P_BP_R Inputs on the rear panel).

1. ASSEMBLED P.W.B. ADJUSTMENT

1.1 Service Menu Access

Adjustment Procedure

(1) To access Service Menu press and hold INPUT key on Control Panel and then press POWER key on control panel to access I^2C adjustment mode.

(2) Receive signal on main picture. (NTSC, SDTV or HDTV).
Some menu pages have I^2C adjustments for SDTV and HDTV. The set will automatically allow you to set these items only when a SDTV or HDTV signal is input to the COMPONENT jacks on the back of the TV. See table below.

(3) Check the OSD according to table on pages 32~38, using THUMB STICK ▲, ▼ on Remote Control.
*: Adjustable Data
Others: Fixed Data (be careful not to change)

(4) Press EXIT key to exit I^2C ADJUST mode.

NOTE: (1) If the TV I^2C data is different from the I^2C Parameter (pages 32~38) for fixed data, change the data to match pages 32~38.

(2) When exchanging microprocessor or EEPROM and TV is turned on for first time, it requires initialization of Memory Initial of I^2C adjustment menu.

1.2 I²C Parameter List

(1) Adjust Mode OSD
Press INPUT + POWER
of control panel.

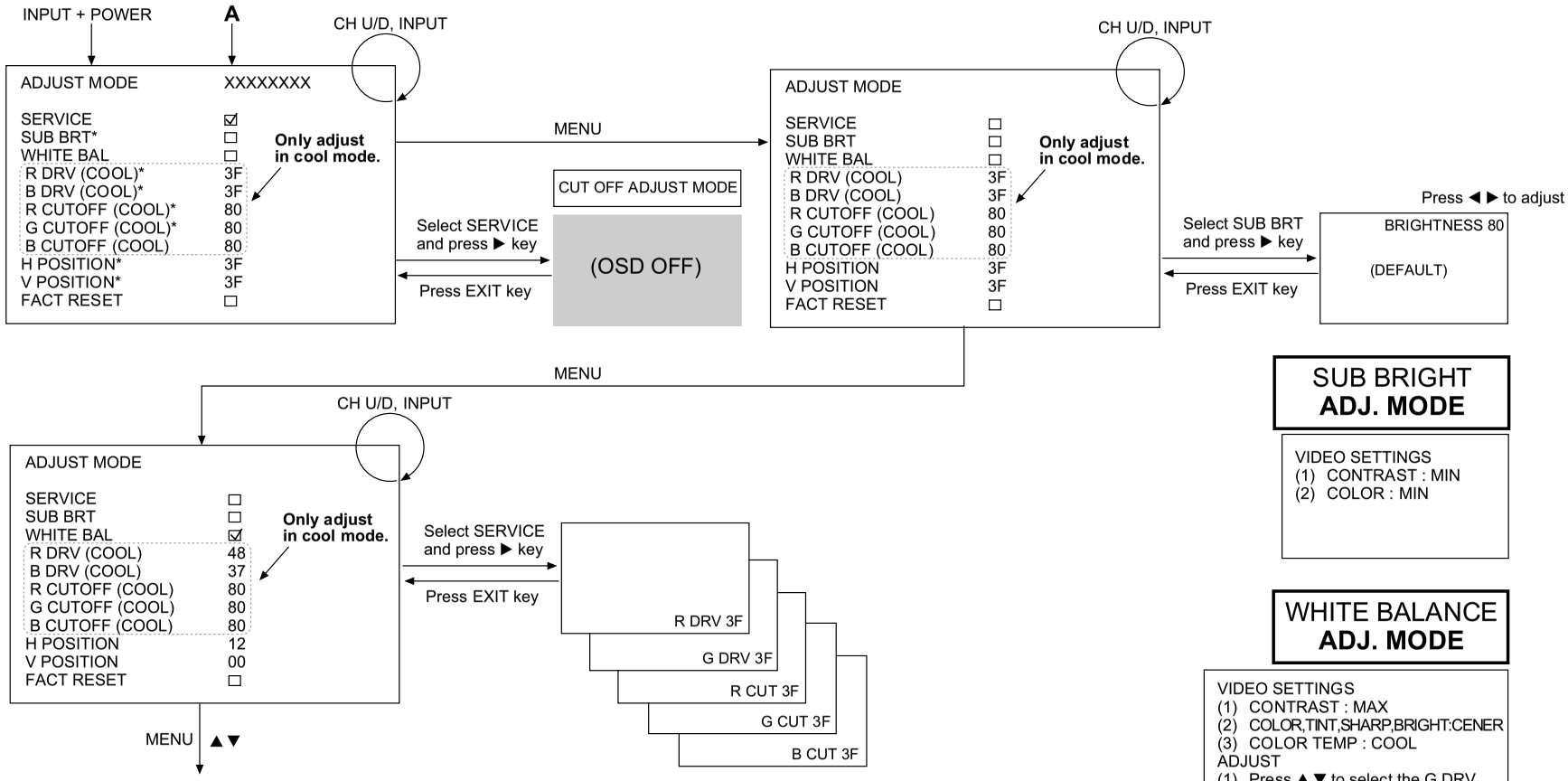

SUB BRIGHT ADJ. MODE

VIDEO SETTINGS
(1) CONTRAST : MIN
(2) COLOR : MIN

WHITE BALANCE ADJ. MODE

VIDEO SETTINGS
(1) CONTRAST : MAX
(2) COLOR,TINT,SHARP,BRIGHT:CENER
(3) COLOR TEMP : COOL
ADJUST
(1) Press ▲▼ to select the G DRV., R DRV., R CUT, G CUT, B CUT. (Initial position G/B DRV). G/B DRV, B/R DRV select by the DR R and DR BG.
(2) Press ◀ ▶ to adjust.

***: Adjustable data**
others: Fixed data (be careful not to change)

1.2 I²C Parameter List Cont.

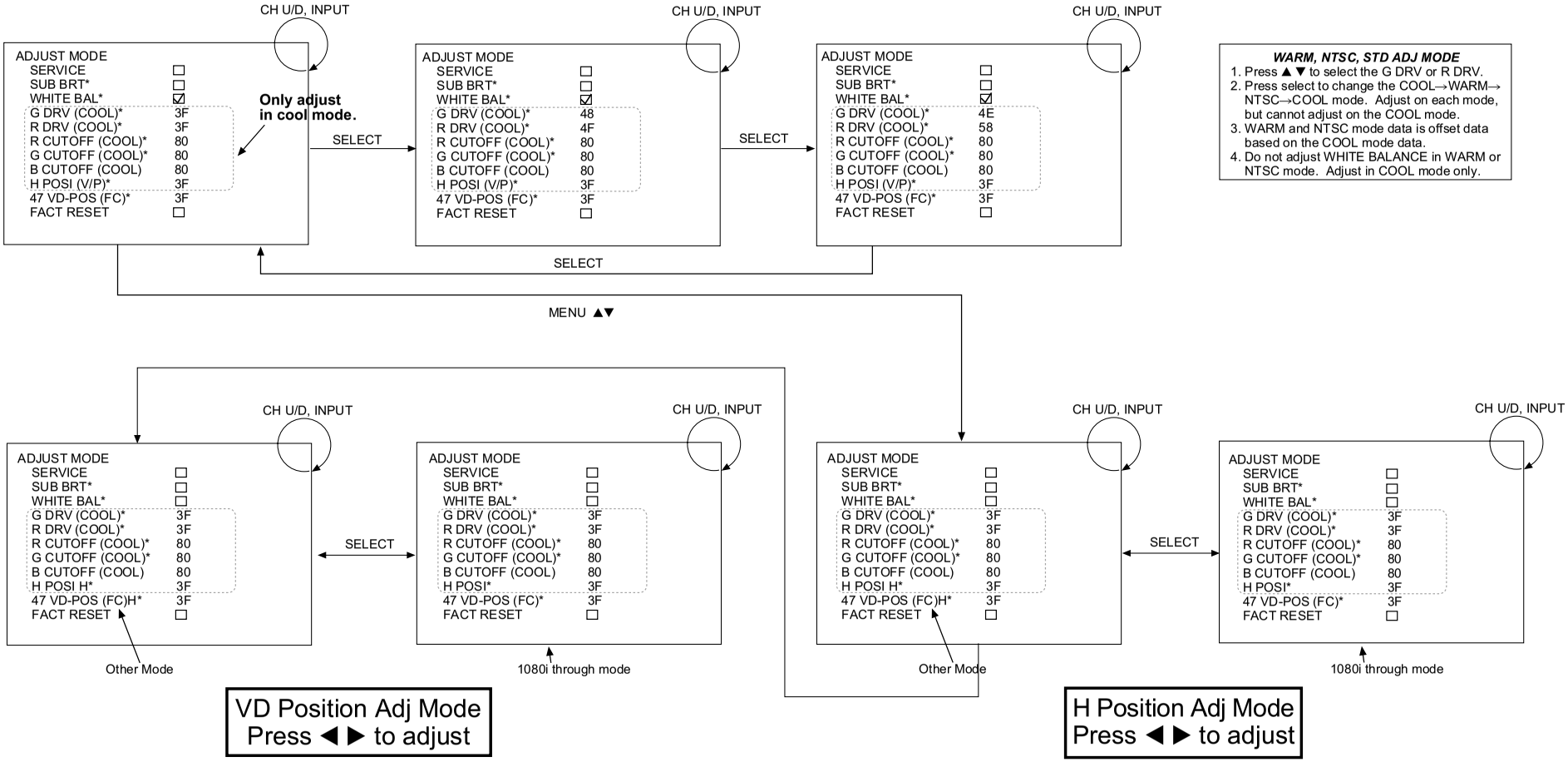

1.2 I²C Parameter List Cont.

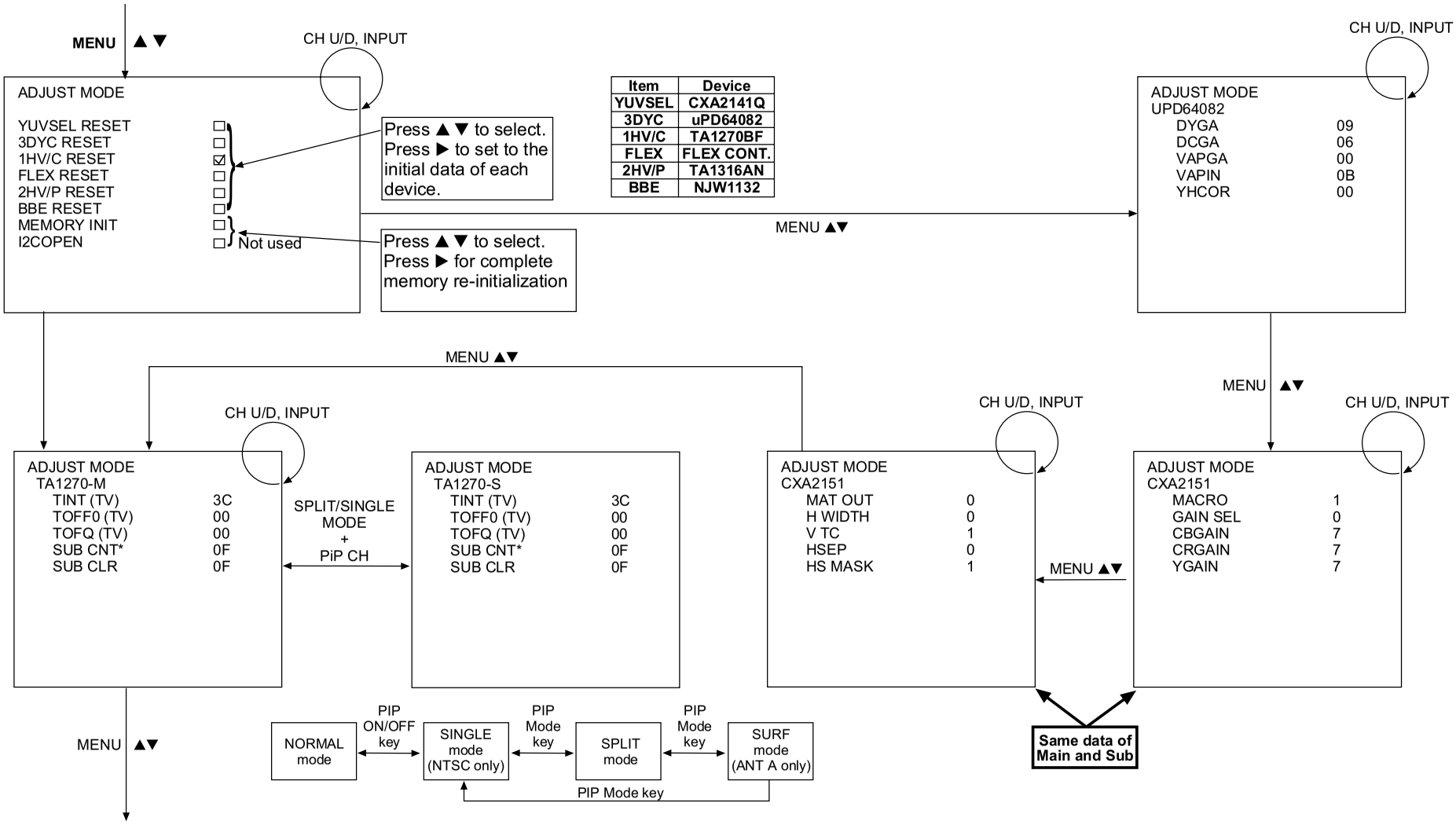

Item	Device
YUVSEL	CXA2141Q
3DYC	uPD64082
1HV/C	TA1270BF
FLEX	FLEX CONT.
2HV/P	TA1316AN
BBE	NJW1132

NOTE: Memory Init. will reset all devices and factory settings. Use factory reset from previous page to restore unit to factory settings condition.

1.2 I²C Parameter List Cont.

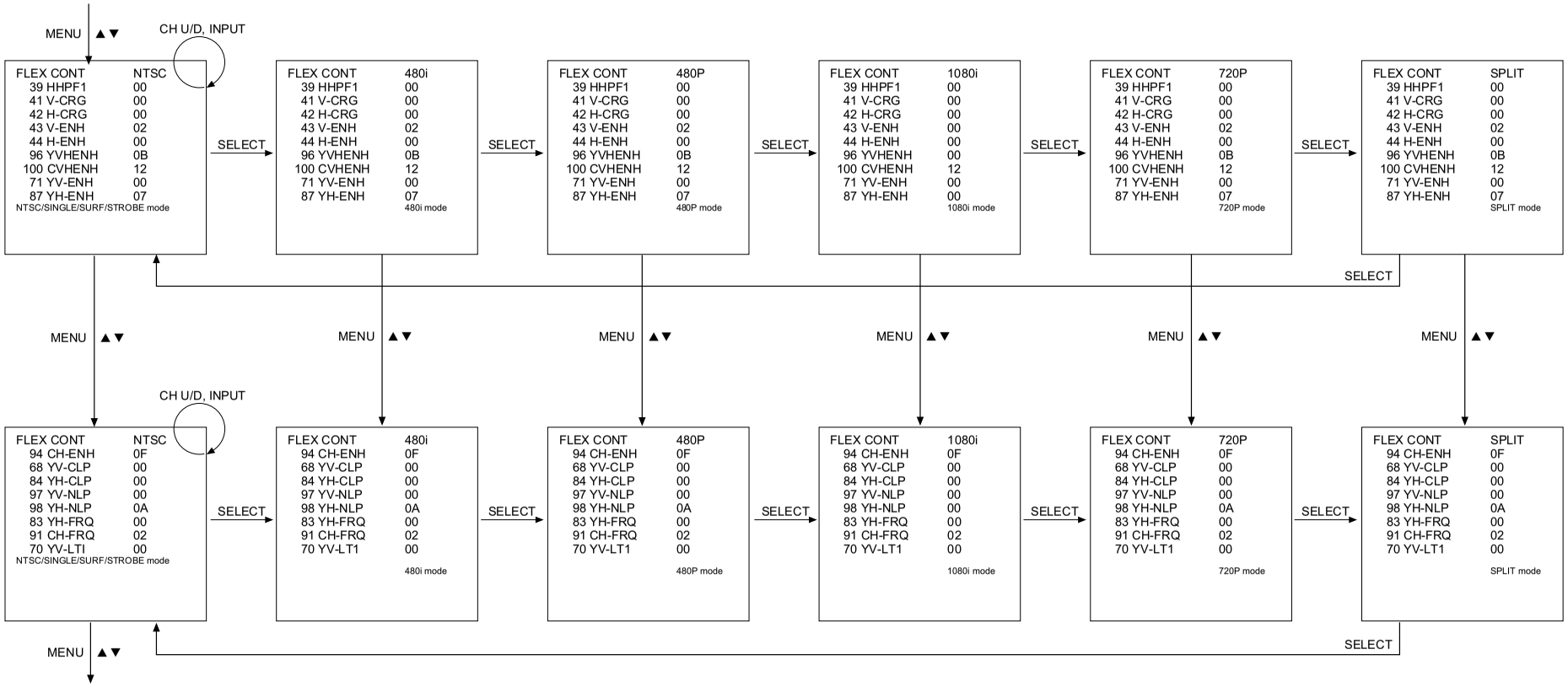

1.2 I²C Parameter List Cont.

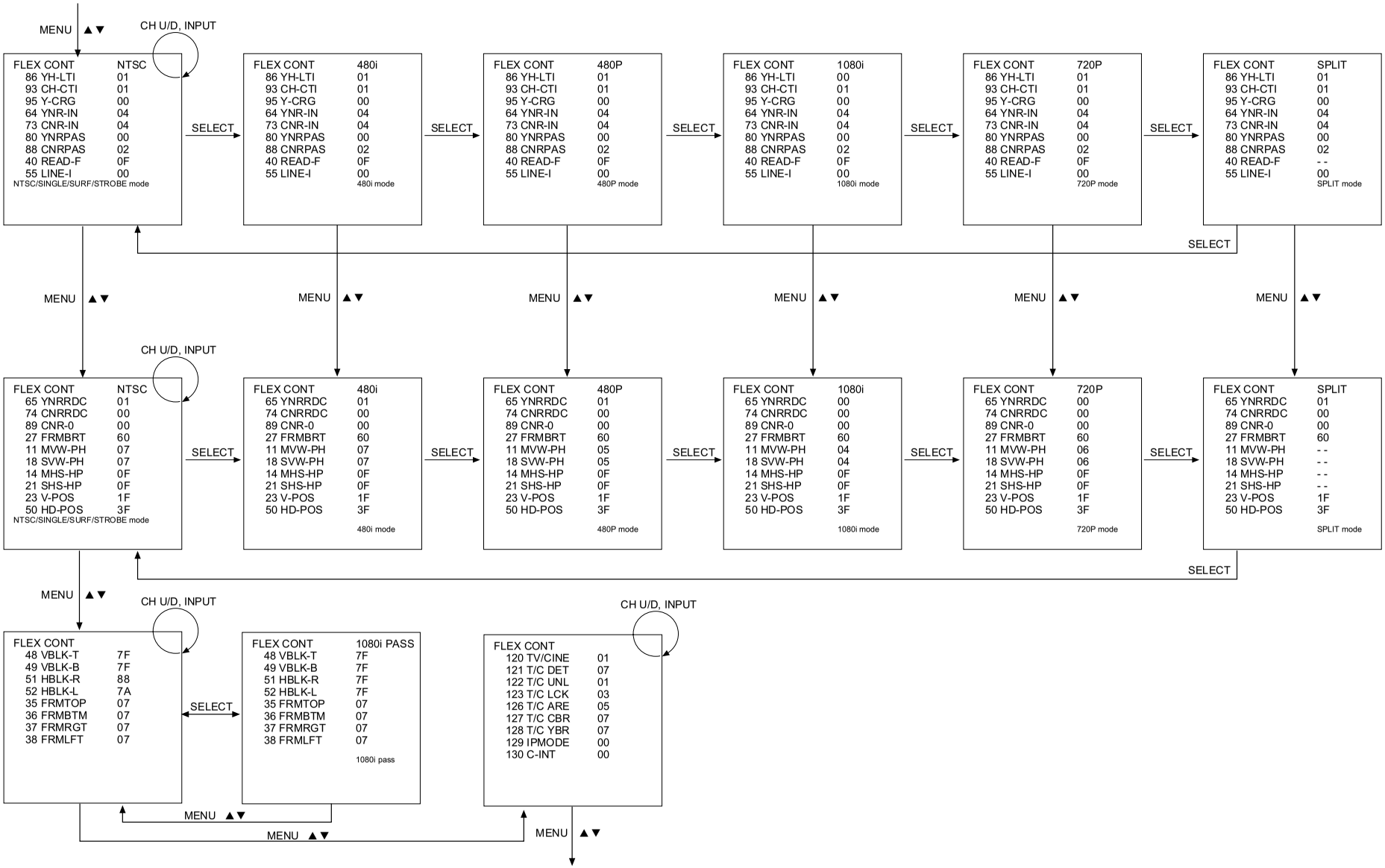

1.2 I²C Parameter List Cont.

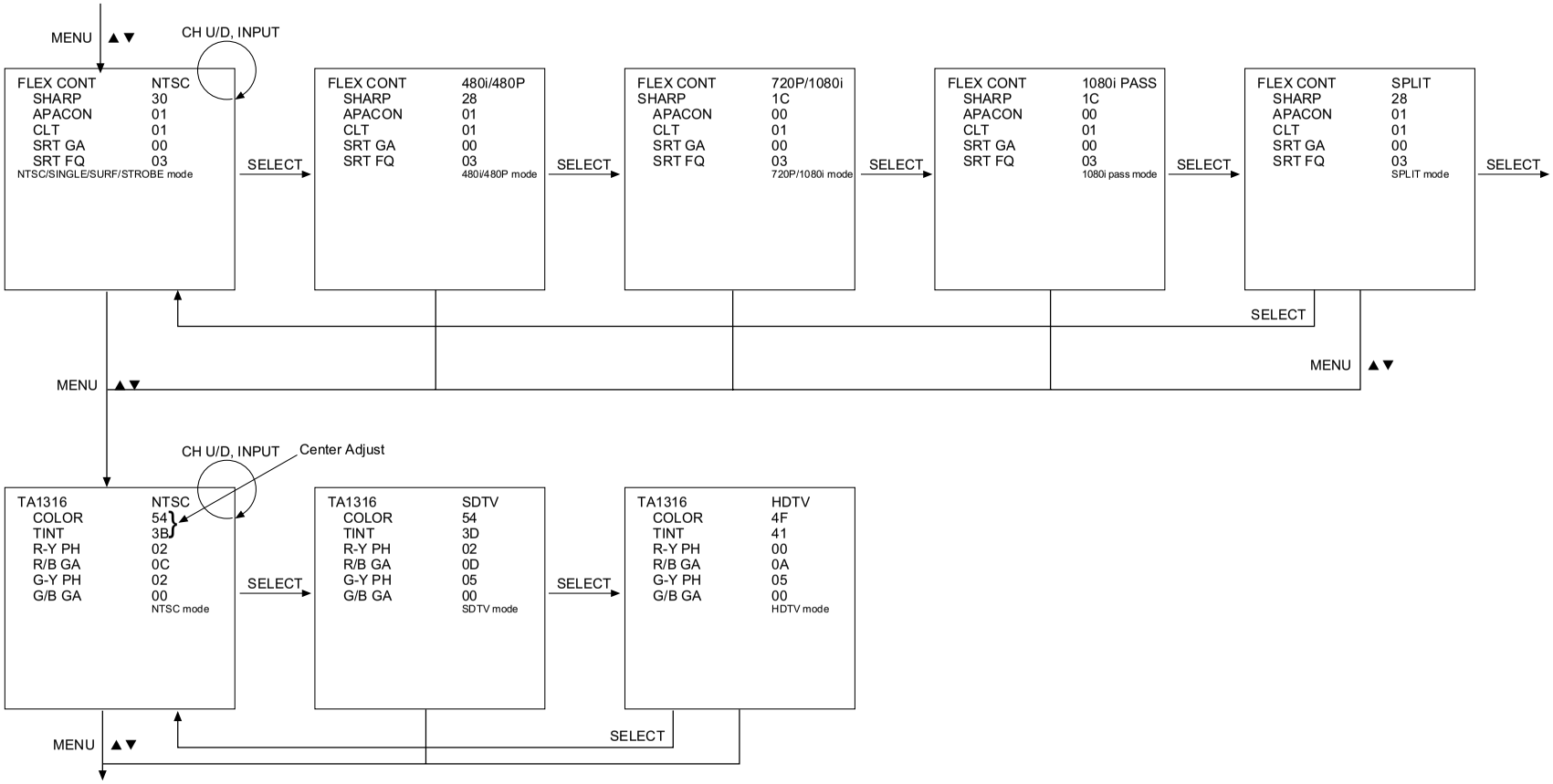

1.2 I²C Parameter List Cont.

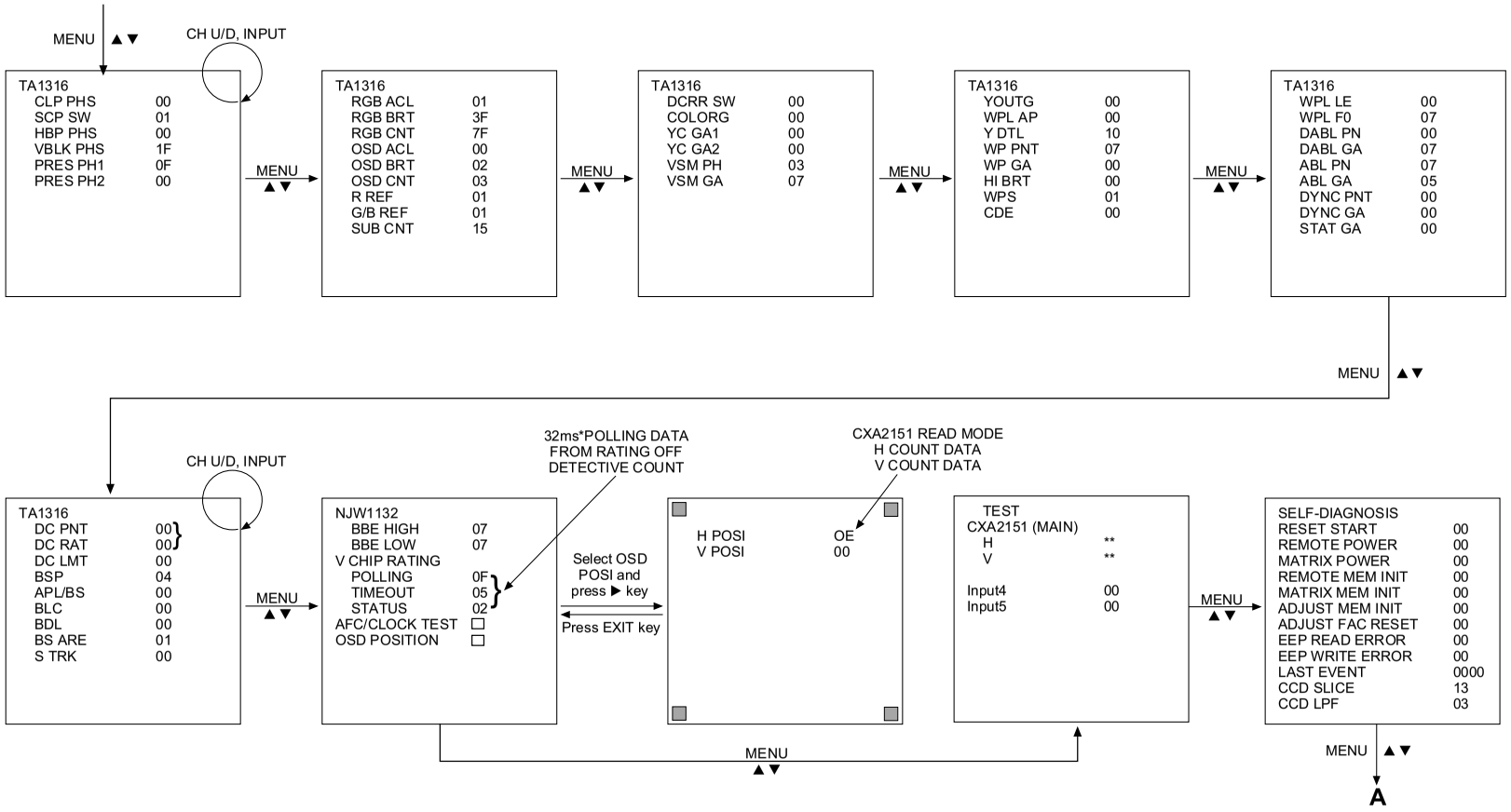

1.2 Comb filter operation check

Adjustment preparation

(1) Receive the color bar signal at the regular tuning point.
(2) Set the CONTRAST control to MAX and the other controls to center.
(3) Set the PERFECT PICTURE to OFF.

Adjustment procedure

(1) Check that between the color bars there are line dots every second color bar as shown in the drawing.

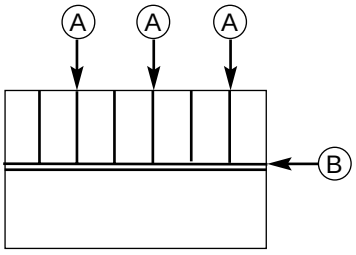

Check (A) and (B) line dots.

LINE	DOT
(A)	X
(B)	X

1.3 AUDIO OPERATION CHECK

1.3.1 TONE CONTROL OPERATION CHECK

Adjustment preparation

(1) Input an audio signal of 250Hz and 3KHz in order with level of 150mVrms to the L/mono audio input.
(2) Set the Volume to around the center.
(3) Set SRS SURROUND to OFF.
(4) Set LOUDNESS to OFF.
(5) Set INTERNAL SPEAKER to ON.

Adjustment procedure

(1) Select BASS mode and check that the audio output level of the speakers changes to emphasized or suppressed when adjusted to max. or min. of the adjustment mode.
(2) Select TREBLE mode and check that the audio ouput level of the speakers changes by emphasized or suppressed when adjust to max. or min. of the adjustment mode.
(3) Select BALANCE mode and check that the audio output changes right or left when adjusted to right or left of the adjustment mode.

1.3.2 PERFECT VOL. OPERATION CHECK

Adjustment preparation

(1) Set PERFECT VOL. mode to on.
(2) Set the Volume to around the center.
(3) Set to SURROUND OFF.
(4) Set INTERNAL SPEAKER to ON.

Adjustment procedure

(1) Input 100mVrms, 200mVrms, 300mVrms and 400mVrms of 1KHz audio signal to L/Mono terminal.
(2) Check that same level sound is ouput from SP when 200mVrms, 300mVrms and 400mVrms of 1KHz sound signal is input.

1.3.3 SRS SURROUND OPERATION CHECK

Adjustment preparation

(1) Set the Master Volume to around the center. (Vol.30)
(2) Set the BALANCE to the center.
(3) Set the BASS and TREBLE to the center.
(4) Set LOUDNESS to OFF.
(5) Set PERFECT VOLUME to OFF.
(6) Set INTERNAL SP to ON.
(7) Set BBE to OFF.
(8) Input the audio signal of 400Hz in order with level of 1Vpp to the R audio input and no signal to the L audio input.

Adjustment procedure

Check the following waveform at the HiFi out.

Output	SRS	
	ON	OFF
HiFi L out	0.35±0.05Vpp 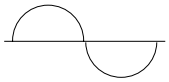	No signal
HiFi R out	1.0±0.05Vpp 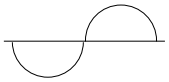	0.2±0.05Vpp 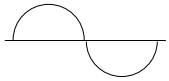

1.3.4 BBE SURROUND OPERATION CHECK

Adjustment preparation

(1) Set the Master Volume to around the center. (Vol.30)
(2) Set the BALANCE to the center.
(3) Set the BASS and TREBLE to the center.
(4) Set LOUDNESS to OFF.
(5) Set PERFECT VOLUME to OFF.
(6) Set INTERNAL SP to ON.
(7) Set SRS to OFF.
(8) Input the audio signal of 100Hz in order with level of 1Vpp to the R audio input and 10kHz in order with level of 1Vpp to the L audio input.

Adjustment procedure

Check the following waveform at the HiFi out.

Output	BBE	
	ON	OFF
HiFi L out	0.4±0.05Vpp 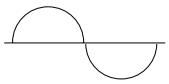	0.2±0.05Vpp 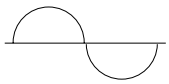
HiFi R out	0.4±0.05Vpp 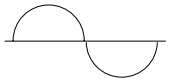	0.2±0.05Vpp 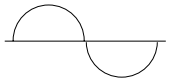

Important: High Voltage adjustment should NOT be adjusted in field. This is adjusted at factory using precise loads and should NOT be readjusted.

1.4 High Voltage Adjustment (should NOT be readjusted in field).

Adjustment preparation

(1) Connect High Voltage meter to FBT High Voltage output. Connect GND of High Voltage meter to CPT GND or FBT GND.
(2) Check that High Voltage adjustment VR (RH17) is set to mechanical center. (located behind FBT on DEFLECTION PWB).
(3) Receive circle pattern signal.
(4) VIDEO control should be reset.

Adjustment procedure

(1) Adjust High Voltage to following spec. by turning VR RH17 slowly. ADJ. SPEC = 30.2 ± 0.2kV
(2) After adjustment, fix VR RH17 with Silicone glue (KE40RTV).

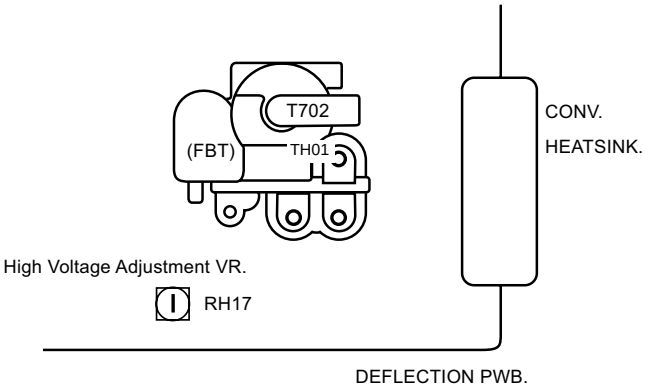

2. FINAL ASSEMBLY ADJUSTMENT

2.1 Cut Off Adjustment

Adjustment preparation

(1) Adjust screen VR's on Focus Pack fully counterclockwise.
(2) Adjust Focus VR's on Focus Pack fully clockwise.
(3) Set video conditions to factory preset.
(4) The vertical incident illumination on the screen should be 20 lux or less (room should be dark).

FOCUS PACK

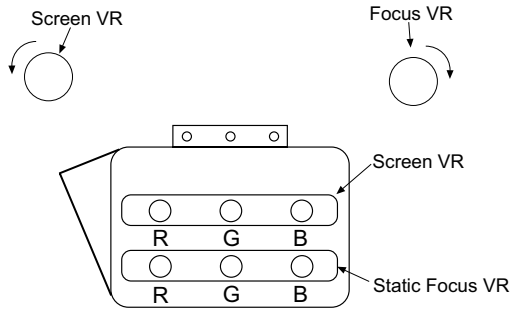

Adjustment procedure

(1) Press and hold INPUT key on control panel and then POWER ON to access I²C adjustment mode.
(2) Choose "SERVICE" item from I²C adjustment menu by pressing THUMB STICK ▶.
(3) Screen VR should be turned clockwise gradually and set so that retrace line begins to appear.
(4) Return to "NORMAL" mode by THUMB STICK ◀ again.
(5) Adjust Focus VR's so that focus is even all around screen.

2.2 DCU Phase Data Setting

Adjustment preparation

(1) Cut off adjustment should be finished.
(2) Set video conditions to factory preset.

Adjustment procedure

NORMAL MODE

(1) Receive any NTSC signal.
(2) Push "SERVICE ONLY" SW on CONV. FOCUS PWB. (Enter to DCU ADJ. mode).
(3) Push HELP key on R/C. (Green cross hatch is displayed).
Then push EXIT key on R/C. (Character pattern is displayed. This is the PHASE setting mode).
(4) Set PH-H phase data as shown below by using 4 and 6 key on R/C.
(5) Set PH-V phase data as shown below by using 2 and 5 key on R/C.
(6) Set CR-H phase data as shown below by using THUMB STICK ◀ and ▶ key on R/C.
(7) Set CR-V phase data as shown below by using THUMB STICK▲ and ▼ key on R/C.
(8) Push HELP key on R/C to exit from the PHASE mode.
(9) Push PIP MODE key 2 times on R/C to write the phase data to memory.
(10) When Green dots are displayed, push MUTE key to return to DCU ADJ. mode.
(11) Push "SERVICE ONLY" SW to return to RF or VIDEO mode.

1080i THROUGH MODE

(12) Receive any 1080i signal (Input to Component video terminal). Select "Aspect 5" on SET-UP, PICTURE FORMAT of OSD MENU.
(13) Repeat steps (2) ~(11) above.

NORMAL MODE	1080i THROUGH MODE
PHASE MODE PH-H :BF PH-V: 07 CR-H: 4C CR-V: 0C	PHASE MODE PH-H: BF PH-V: 07 CR-H: 4C CR-V: 0C

2.3 Horiontal Position Adjustment (Coarse)

Adjustment preparation

(1) DCU PHASE DATA SETTING should be finished.

Adjustment procedure

NORMAL MODE

(1) Receive circle pattern (03ch.)
(2) Push SERVICE ONLY switch to display DCU crosshatch. Mark the DCU crosshatch center position using your finger tip.
(3) Push SERVICE ONLY switch again to exit from the DCU crosshatch.
(4) Go to I²C ADJ. mode.
(5) Choose H. POSI item by using R/C MENU (or up/down cursor) key. Adjust horizontal position to match the circle center to DCU crosshatch center (marked by your finger tip).
(6) Exit from I²C menu.

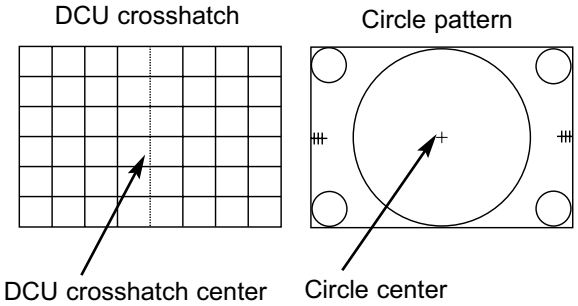

1080i THROUGH MODE

(1) Receive 1080I (fH=33.75KHz) circle pattern signal. (Input to component video terminal.)
(2) Select “Aspect 5” on SET-UP, PICTURE FORMAT of OSD MENU.
(3) Repeat above steps (2)~(6).

2.4 Raster Tilt adjustment (Deflection yoke)

Adjustment preparation

(1) The set can face east or west.
(2) Input the single cross test signal.
(3) Set video conditions to factory preset.
(4) The lens focus and horizontal position adjustment should have been coarse adjusted.
(5) The electrical focus should have been coarse adjusted.
(6) The digital convergence RAM should be cleared (uncorrected state). With the TV set off, press and hold the service switch located on the Power/Deflection PWB and then press the power button.
(7) Start adjustment 20 minutes or more after TV is turned on.

Adjustment procedure

(1) Short-circuit 2P (TS) sub-mini connectors on Red and Blue CPT P.W.B.s to project only the Green beam.
(2) Turn the G deflection yoke and adjust the vertical raster inclination.
(3) Then, remove the cover of R or B lens and project red or blue light and green light together on screen.
(4) Turn the deflection yoke of R or B and set so that the inclination of R or B light with respect to the green light is as shown below on the top and bottom sides.
(5) After raster inclination adjustment, fixing screw of DY should be screwed with 12±2kg-cm torque.

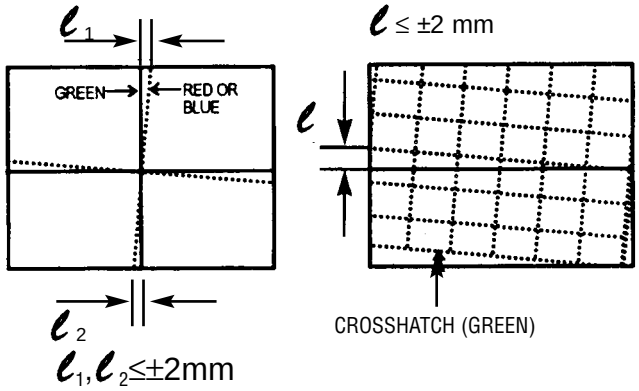

Notes: (1) If internal cross-hatch does not appear after clearing RAM data, press service switch again, on POWER/DEFLECTION PWB.
(2) To resotre old RAM data, turn TV off and on.

2.5 Beam alignment

Adjustment preparation

(1) Adjust at least 30 minutes after turning on power switch.
(2) Raster tilt should be completed. Raster position, horizontal and vertical size, and optical focus adjustment should be coarse adjusted.
(3) Set video conditions to factory preset.
(4) Receive cross-hatch signal.

Adjustment procedure

(1) Green (G) tube beam alignment adjustment. Short-circuit 2P subminiature connector plug pins of Red (R) and Blue (B) on the CPT boards and project only Green (G) light or you may cover the R and B lens.
(2) Put Green (G) tube beam alignment magnet to the cancel state as shown below.

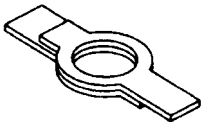

(3) Turn the Green (G) static focus (Focus Pack) counterclockwise all the way and make sure of position of cross-hatch center on screen. (Halo state.)
(4) Turn the Green (G) static focus (Focus Pack) clockwise all the way. (Blooming state.)
(5) Turn two magnets forming alignment magnet in any desired direction and move cross-hatch center to position found in (3).
(6) If image position does not shift when Green (G) static focus (Focus Pack) is turned. Green (G) beam alignment has been completed.
(7) If image position shifts when Green (G) static focus (Focus Pack) is turned, repeat (2)-(6).
(8) Conduct beam alignment for red (R) and Blue (B) focus: Focus Pack UFPK.
(9) Upon completion of adjustment, fix beam alignment magnets with white paint.

2.6 Raster position adjustment

Adjustment preparation

(1) The set can face east or west.
(2) Input the single cross test signal.
(3) Set video conditions to factory preset.
(4) The electric focus should have been coarse adjusted.
(5) The digital convergence RAM should be cleared (uncorrected state). With the TV set off, press and hold the service switch located on the Power/Deflection PWB and then press the power button.
(6) Start adjustment 20 minutes or more after TV is turned on.

Adjustment procedure

(1) Turn the centering magnets for red, green, and blue to satisfy the condition below. The red and blue horizontal lines should match with green.

	ℓ_1 (RED)	ℓ_2 (BLUE)
43”	20	25
53”	15	25
61”	15	15

Tolerance: ± 2mm

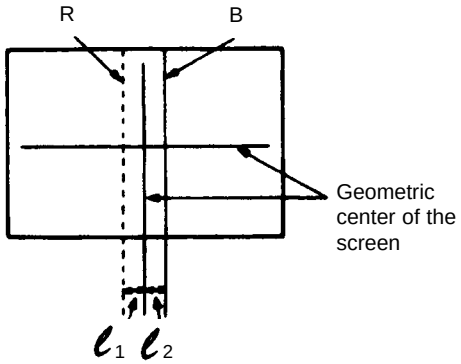

(2) Upon completion of adjustment, fix centering magnets with white paint.

NOTES: (1) If internal cross-hatch does not appear after clearing RAM data, press service switch again.
(2) To restore old RAM data, turn TV off and on.

2.7 Vertical size adjustment

Adjustment preparation

(1) The set can face east or west.
(2) Set video conditions to factory preset.
(3) The electric focus should have been coarse adjusted.
(4) Start adjustment 20 minutes or more after TV is turned on.

Adjustment procedure

(1) Receive any NTSC signal.
(2) Press the SERVICE ONLY SW on CONVERGENCE FOCUS PWB and POWER to display DCU uncorrected convergence data.
(3) Locate the vertical size VR (R607) on DEFLECTION PWB. Adjust the vertical size according to the following table.

ℓ =	NORMAL MODE
43”	560
53”	690
61”	795

Tolerance: ± 5mm

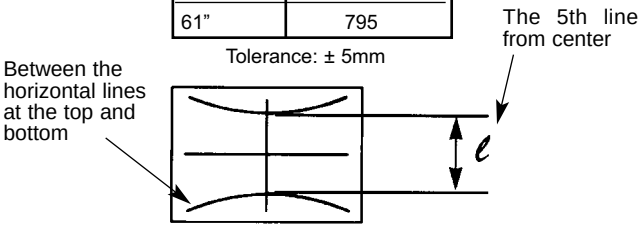

Notes:(1) If internal cross-hatch does not appear after clearing RAM data, press service switch again (on POWER/DEFLECTION PWB).
(2) To restore old RAM data, turn TV off and on.
(3) V-Size is only done in NORMAL mode (NTSC).

2.8 Horizontal size adjustment

Adjustment preparation

(1) The set can face east or west.
(2) Set video conditions to factory preset.
(3) The electric focus should have been coarse adjusted.
(4) Start adjustment 20 minutes or more after TV is turned on.

Adjustment procedure

(1) Receive any NTSC signal.
(2) Press the SERVICE ONLY SW on CONVERGENCE/FOCUS PWB and POWER to display DCU unceorrected converge data.
(3) Locate the horizontal size VR (R711 on POWER/DEF PWB). Adjust horizontal size to the table below.

ℓ =	NORMAL MODE
43”	825
53”	1020
61”	1175

Tolerance: ± 5mm

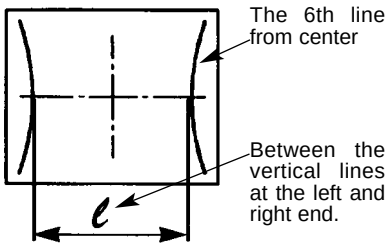

Notes: (1) Once Normal mode Horizontal size adj. is done. To restore old RAM data, turn TV off and on.
(2) After adjustment, press SERVICE ONLY switch to exit DCU crosshatch.
(3) H. SIZE adjustment is only done in NORMAL MODE (NTSC).

2.9 Beam form adjustment

Adjustment preparation

(1) The beam alignment should have been completed.
(2) The raster tilt, centering, horizontal/ vertical size, scanning area check, and raster distortion should have been completed.
(3) Set video conditions to factory preset.
(4) Input the dot signal.

Adjustment procedure

(1) Green PRT beam shape adjustment. Short-circuit 2P (TS) sub-mini connectors on Red and Blue CPT P.W.B.s to project only the Green beam.
(2) Turn the green static focus VR, on the Focus Pack, fully clockwise. (Blooming)
(3) Make the dot at the screen center a true circle using the 4-pole magnet as shown below.
(4) Also adjust the Red and Blue PRT beam shapes according to the steps (1) to (3).
(5) After the adjustment has been completed, return

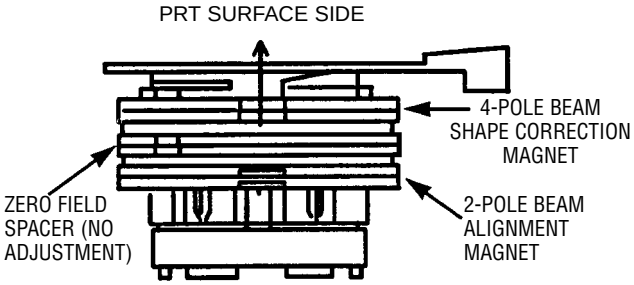

TRUE CIRCLE SPECIFICATION

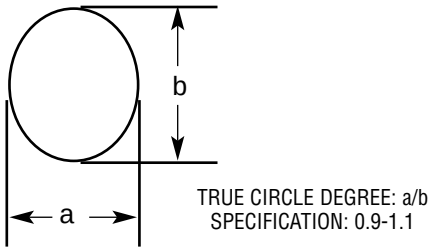

2.10 LENS FOCUS ADJUSTMENT

Adjustment preparation

(1) The orientation of PTV set is arbitrary, west, east, north and south.
(2) Centering DY inclination should have been adjusted.
(3) Electrical focus adjustment should have been completed.
(4) Drive VR location adjustment should have been completed. (Red : 12 O'clock, Green : 1~2 O'clock).
(5) Receive the cross-hatch pattern signal.
(6) Refer to setup below.
CONTRAST : HALF of full scale.
BRIGHTNESS : minimum

Adjustment procedure

(1) Loosen the fixing screw or wing nut on the lens cylinder so that the lens cylinder can be turned. (Be careful not to loosen too much). After completing steps (4), (5), (6) below, tighten the fixing screws or wing nuts for each lens with a torque of 1.18N.m (12Kgf cm) ~ 1.67N.m (17Kgf cm).

(Be careful the lens cylinder does not turn after having tightened the screw or wing nuts. If it is tightened too much, lens may tilt or screw may break.)

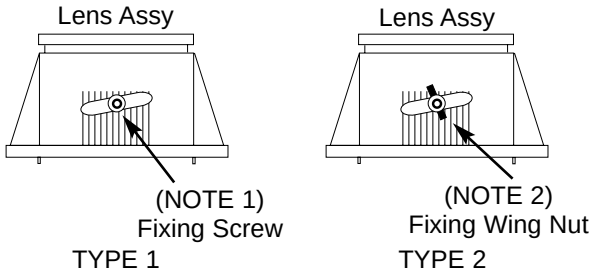

(2) Apply covers to each color of R, G and B lenses. And project a single color on the screen and adjust in sequence. (The adjustment order of G, R and B is only an example.)
(3) If the lens adjustment knob is turned clockwise viewed from the front, the color Aberration change as follows.

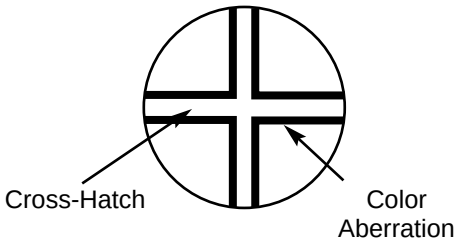

	Change of Color Aberration	
	Short focus	Long focus
RED LENS	Orange	Scarlet
GREEN LENS	Blue	Red
BLUE LENS	Purple	Green

(4) In case of G lens. Set to the point where the chromatic aberration switches from blue to red. If the chromatic aberration appearing all over the screen is not the same, observe the vertical bright line and adjust lens focus as specified in table below. When the red chromatic aberration appearing at both sides of the bright line is not equal, observe the side with larger chromatic aberration when adjusting.

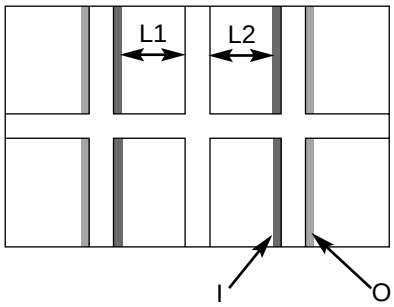

OPTICAL FOCUSING ADJUSTMENT GREEN

CHASSIS		DP15		DP15F
SCREEN SIZE		61”	53”	43”
L1 and L2 (PITCHES from CENTER)		3.0	3.0	3.0
COLOR ABERRATION	BETWEEN L1&L2	*	*	*
	I	* 2.0mm MAX	* 2.0mm MAX	* 2.5mm MAX
	O	* 2.0mm MAX	* 2.0mm MAX	** 2.5mm MAX

(NOTE) * Slightly reddish or no color
** Slightly reddish or no color

Change the signal to the circle pattern and fine adjust. Observe the corner part of the screen, especially observe number in the small circle when adjusting. If the focus performance at the screen center exceeds the lower limit, it is acceptable.

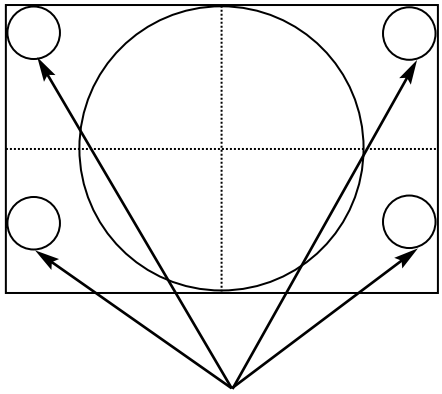

Small circle of circle pattern

NOTES: 1. Since the G light is very important for picture quality and performance, pay special attention in its adjustment.
2. Be careful not to touch the lens with your fingers when adjusting.

(5) In case of R lens. Set the position where the chromatic aberration changes from red to crimson. As shown below, observe the vertical bright line and adjust lens focus where the crimson or red chromatic aberration slightly appears inside, and crimson or red outside (reference value : 1~4mm) at the point specified in table below. Change the signal and fine-adjust the same way as the G lens.

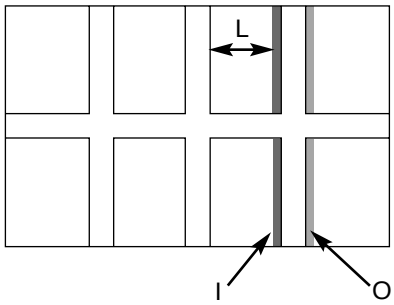

NOTE: Setting the center between Red and crimson is optimum.

OPTICAL FOCUSING ADJUSTMENT RED

CHASSIS		DP15		DP15F
SCREEN SIZE		61”	53”	43”
L1 and L2 (PITCHES from CENTER)		4.0	3.0	3.0
COLOR ABERRATION	BETWEEN L1&L2	*	*	*
	I	* 2.0mm MAX	* 2.0mm MAX	* 3.5mm MAX
	O	** 2.0mm MAX	* 2.0mm MAX	** 2.5mm MAX

(NOTE) * Slightly reddish or no color
** Slightly reddish or no color

(6) In case of B lens. Set the position where the chromatic aberration changes from purple to green. As shown below, observe the vertical bright line and adjust lens focus where the purple or green chromatic aberration slightly appears inside and purple or green outside (reference value : 1~4mm) at the point specified in table below. Change the signal and fine-adjust in the same way as the G lens.

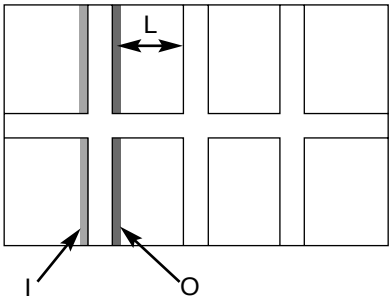

NOTE: Setting to the center between purple and crimson is optimum.

OPTICAL FOCUSING ADJUSTMENT BLUE

CHASSIS		DP15		DP15F
SCREEN SIZE		61”	53”	43”
L1 and L2 (PITCHES from CENTER)		4.0	3.0	3.0
COLOR ABERRATION	BETWEEN L1&L2	*	*	*
	I	* 2.0mm MAX	* 2.0mm MAX	* 3.5mm MAX
	O	* 2.0mm MAX	* 2.0mm MAX	** 3.5mm MAX

(NOTE) * Slightly reddish or no color
** Slightly reddish or no color

(7) After all colors have been adjusted, display all colors with the cross-hatch pattern signal and check the focus performance.
(8) Then, select the circle pattern signal and check the focus performance of each color and all colors together.
(9) If the focus performance is not acceptable re-adjust step (1) to (6).

2.11 STATIC FOCUS ADJUSTMENT

Adjustment preparation
(1) LENS FOCUS adjustment should be finished.
(2) Contrast : MAX
Brightness : Center.
(3) Receive the circle pattern signal.
(4) Apply covers to the lens of the colors you are not adjusting and project only one color on the screen.

Adjustment procedure
(1) Red and blue static focus adjustment. Adjust the static focus VR on Focus pack (UFPK) so that the center of circle pattern is the most clear. Check that the focus does not get conspicuously worse at the edges of the circle pattern signal or cross-hatch signal.
(2) Green static focus adjustment. Adjust the static focus VR on Focus pack (UFPK) (for green) so that the center of circle pattern is the most clear. Check that the focus does not get conspicuously worse at the checking point, the periphery of circle pattern cross-hatch signal.

NOTE: Checking point for the periphery of picture.

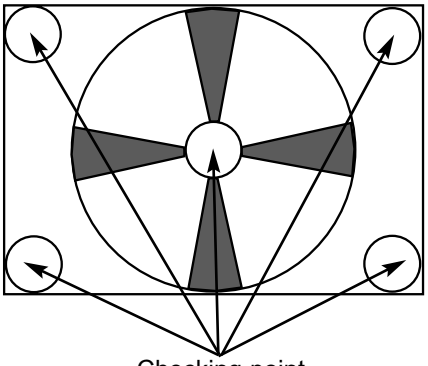
Checking point

2.12 Digital convergence adjustment

Note: If replacing a PRT, DY, etc. perform auto-digital convergence first. (Press front panel MAGIC FOCUS switch and in through mode). This can eliminate the need for a complete digital convergence alignment.

Adjustment preparation
(1) Receive an RF or video signal.
(2) Set controls to factory preset.
(3) Install jig screen on the set.
(4) Note the center of the video pattern displayed. This is necessary to match dotted lines (adjustment point viewed) and actual point that is adjusted and displayed by the video signal.
(5) Press the service only switch (on CONV./FOCUS PWB). The pattern displayed is now the digital convergence mode.
(6) When performing a complete digital convergence adjustment CLEAR DATA in RAM. (With the TV set off, press and hold the service switch located on the CONV./FOCUS P.W.B. and then press the POWER button).

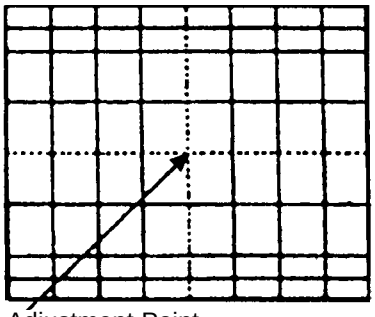
Adjustment Point

2.12.1 MAGIC FOCUS Character Set-Up

This instruction should be applied when a new DCU is being replaced.

Adjustment Preparation

(1) Receive NTSC RF or video signal.

(2) With Power off, PRESS and HOLD the SERVICE ONLY button on CONVER/FOCUS PWB, then press the Power On/Off, when picture appeares release SERVICE ONLY switch. (Internal crosshatch is displayed without conv. correction data.)

Adjustment Procedure

NORMAL MODE

(1) Press FREEZE key on R/C. (One additional line appears near the top and near the bottom.)

(2) Press PIPCH key, then ADJ. PARAMETER mode is displayed as following.

(3) Press ◀ or ▶ key to change the ADJ. DISP. data.

```
ADJ. PARAMETER
   ROM WRITE?
→ ADJ. DISP.  :  77

SEL. STAT.   : 00
DEMO.WAIT :  2f
```

(4) Press CURSOR ▼ to access DCU parameter. Change the data as shown on Table 1, DCU Parameter.

TABLE 1. - DCU PARAMETER

Parameter	Normal	1080i Through
ADJ. DISP	77	•
SEL. STAT	00	•
DEMO WAIT	2F	•
INT STEP 1	02	•
INT A DLY	0A	•
INT C DLY	FA	•
INT BAR	1C	•
MGF STEP 1	00	•
MGF A DLY	0A	•
MGF C DLY	FA	•
MGF BAR	0E	•
SENSOR CK	00	•
SENSOR 0	FF	•
SENSOR 1	00	•
SENSOR 2	FF	•
SENSOR 3	01	•
SENSOR 4	FF	•
SENSOR 5	06	•
SENSOR 6	FF	•
SENSOR 7	07	•
AD LEVEL	03	•
E. DISPLAY	00	•
ADJ. TIMS	60	•
AD LEVEL	05	•
AD NOISE	80	•
PHASE MOT	60	•
H. BLK-RV	06	03
H. BLK-GV	01	•
H. BLK-BV	06	03
H. BLK-H	00	•
PON DELAY	0c	•
IR-CODE	00	•
INITIAL 50	9E	•
MGF 50	96	•
9 POINT 50	FE	•
STAT 50	FE	•
DYNA 50	9F	•

(5) Press PIP MODE key 2 times to write the changed data into EEPROM. (First press, ADJ. PARAMETER / ROM WRITE ? is displayed. 2nd press writes data into EEPROM. Green dots appear after completion of operation.)
(6) Press MUTE key 3 times to exit from ADJ. PARAMETER mode.

1080i THROUGH MODE

(6) press EXIT button 5 times to return to VIDEO mode.
(7) Select INPUT with 1080i input.
(8) Access menu and select ASPECT 5 (Through Mode).
(9) press SERVICE SW. only to enter DCU crosshatch signal.
(10) Repeat steps 1 through 6.

NOTE: 4:3 aspect model (DP15, DP15E) has 2 DCU memories. One is for NTSC input, the other is for 1080i through mode. All DCU data must be done in both modes.

2.12.2 MAGIC FOCUS Pattern Set-Up

NOTE: (1) This instruction should be applied when a new DCU is being replaced.
(2) This instruction shows how to set up the pattern position for MAGIC FOCUS.

Adjustment Procedure

(1) Receive NTSC RF or video signal.
(2) With Power off, PRESS and HOLD the SERVICE ONLY button on CONVER/FOCUS PWB, then press the Power On/Off, when picture appeares release SERVICE ONLY button. (Internal crosshatch is displayed without conv. correction data.)

Adjustment Procedure

NORMAL MODE

(1) Press FREEZE key on R/C. (One addtional line appears near the top and near the bottom.)
(2) Press HELP key, then MAGIC FOCUS PATTERN mode is displayed as follows:

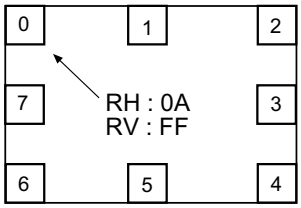

(3) Use [6] key on remote control to rotate the arrow. Arrow indicates each sensor position. (Upper left corner, middle top, upper right corner, right middle, in this order).
(4) Use the keys to switch color of pattern.
STATUS : Green pattern
0 : Red pattern
ANT : Blue pattern
(5) Press ◄ or ► key to change the data value to the horizontal direction. Press ▲ or ▼ key to change the data value to the vertical direction.
(6) Set the data as shown below:

Pattern Position

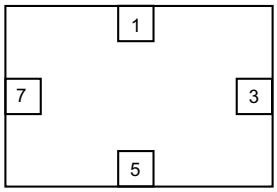

Normal Mode:

	0	1	2	3	4	5	6	7
RH	X	02	X	FE	X	02	X	04
RV	X	01	X	00	X	FF	X	00
GH	X	00	X	FE	X	00	X	04
GV	X	01	X	00	X	FF	X	00
BH	X	00	X	FE	X	00	X	04
BV	X	01	X	00	X	FF	X	00

X= Not in use

V. Squeeze Mode (1080i Throught Mode):

	0	1	2	3	4	5	6	7
RH	X	02	X	FA	X	02	X	06
RV	X	00	X	00	X	00	X	00
GH	X	00	X	FA	X	00	X	06
GV	X	00	X	00	X	02	X	00
BH	X	00	X	FA	X	00	X	06
BV	X	00	X	00	X	00	X	00

X= Not in use

(7) Press PIP MODE key 2 times to write the changed data in EEPROM. (First press, ADJ. PATTERN/ROM WRITE ? 2nd press, writes data into EEPROM. Green dots appear after completion of operation.)
(8) Press MUTE key 3 times to exit from PATTERN mode.

1080i THROUGH MODE

(9) Press EXIT button 5 times to return to VIDEO MODE.
(10) Select 1080i input signal.
(11) Access MENU and select ASPECT 5 (Through Mode).
(12) Press SERVICE SWITCH only to enter DCU crosshatch signal.
(13) Repeat steps 1-8.

NOTE: 4:3 Aspect model has 2 DCU memories. One is for NTSC input, the other is for 1080i through mode (Aspect 5). All DCU data must be done in both modes.

2.12.3 Convergence Jig Screen Specifications

43 Full (4:3)

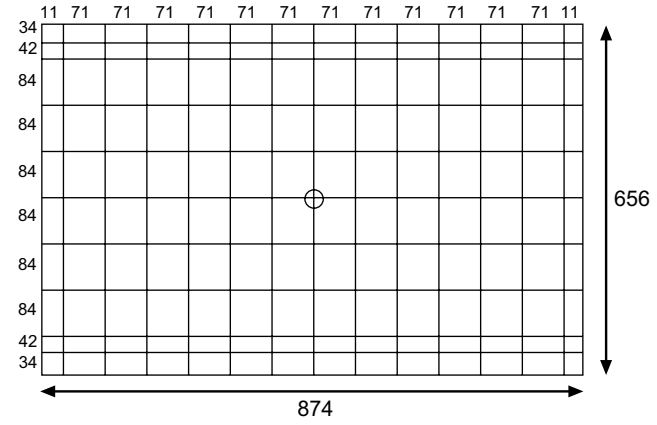

43 V. Squeeze (16:9)

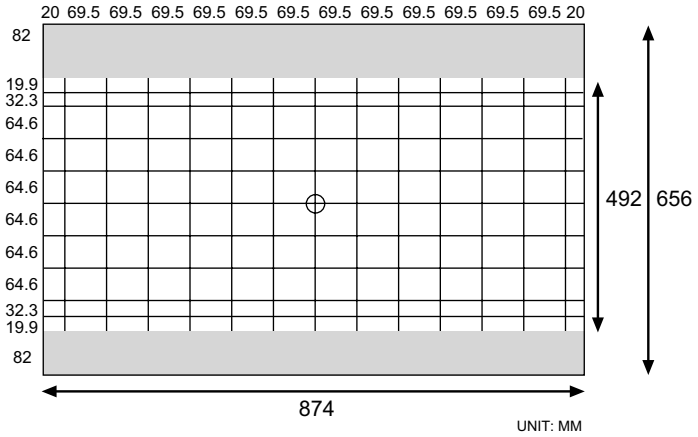

53 Full (4:3)

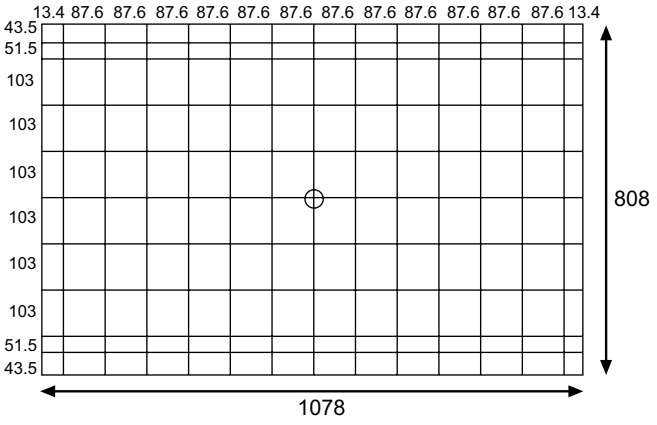

53 V. Squeeze (16:9)

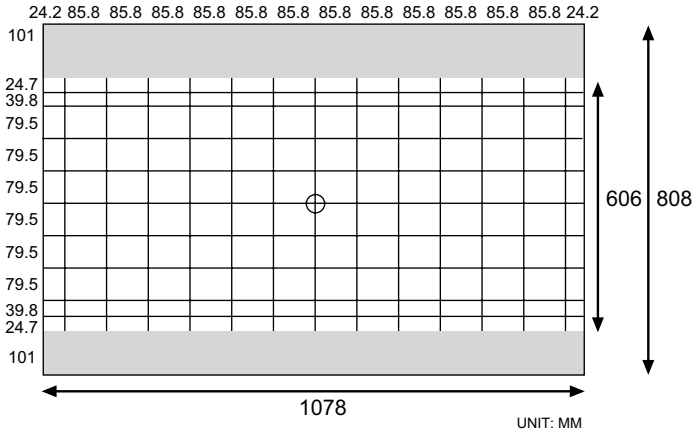

61 Full (4:3)

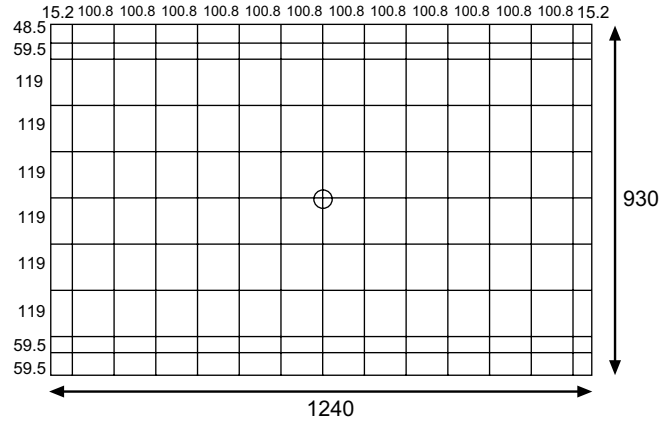

61 V. Squeeze (16:9)

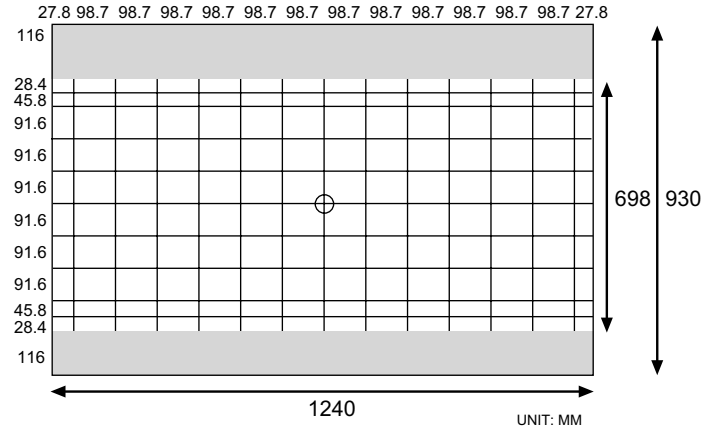

Note: If only minor adjustments to convergence are needed, the jig screen is not necessary. Use digital data stored in memory and one color as a reference (red, green, or blue). DO NOT CLEAR DATA and WRITE to ROM memory.

2.12.4 Raster position adjustment

Adjustment preparation

(1) Position adjustment - This will move an entire color. Use this adjustment to match colors at the center of the screen. (Active video center from external signal and physical screen center should now match from phase adjustment).
(2) Use the buttons below to switch color to adjust.
"STATUS" - Green
"0" - Red
"ANT" - Blue

Adjustment procedure

(1) Press the FREEZE button. Extra horizontal lines appear to confirm raster position mode.
(2) Use the thumb stick to adjust position.
(3) Press FREEZE again to exit raster position mode.

Notes: (1) Other functions cannot be accessed when in raster position adjustment mode. Press FREEZE and confirm extra horizontal lines disappear to exit raster position mode.
(2) Press MENU to switch between all colors displayed or adjustment color and Green only.

2.12.5 Convergence point adjustment

Adjustment preparation

(1) Select color to adjust.
"STATUS" - Green
"0" - Red
"ANT" - Blue
(2) Use 4, 6, 2, and 5 to move the cursor position (dotted lines).
(3) Use thumb stick to move the convergence point.
(4) Three adjustment modes are available:
1. (3x3) Press "STATUS" 5 times (only works when DCU is in uncorrected state)
2. (7x5) Press "0" 5 times
3. (13x9) Press "ANT" 5 times

For touch-up, only the (13x9) mode is necessary. This will adjust every cross-hatch intersection point on the screen.

For complete adjustment, start with (3x3) mode. This will adjust center point and eight edge points only, but will greatly reduce adjustment time. Then use (7x5) mode, and finally (13x9) mode to finish convergence.

If "S" distortion appears between cross-hatch lines repeat (7x5) mode to change calculation process while adjusting to remove distortion, then return to (13x9) mode to finish touch-up convergence.

Adjustment procedure

NORMAL MODE

(1) Receive any NTSC signal.
(2) Start adjustment at the center of the screen.
(3) Continue adjustment at next closest position.
(4) Adjust center area first, ending with edge sections.
(5) Press INFO button to perform calculation operation. This process will take about 2 seconds and no picture will be seen at this time.
(6) After interpolation, check convergence again and repeat (1)-(5) if necessary.
(7) When convergence is acceptable, press PIP MODE to write data to ROM memory. ROM WRITE? is displayed to alarm system that ROM will be overwritten with new data. Press the PIP MODE button again to write displayed data to ROM.
(8) DATA WRITE TO ROM will take approximately 4 seconds and no picture will be displayed.
(9) Green dots will be displayed when operation is completed.
(10) Press MUTE to return to convergence pattern, then confirm again convergence is acceptable.
(11) Press PIP MODE (ROM WRITE) mode, then press PIP CH to initialize sensor data positions.

Adjustment procedure

1080i THROUGH MODE

(12) Input any 1080I signal.
(13) Press EXIT key 5 times to exit video mode.
(14) Select an input with 1080i signal.
(15) Access menu and select ASPECT 5 mode.
(16) Press the SERVICE SW. ONLY button to enter to DCU crosshatch signal.
(17) Repeat steps 2~11 above.

Notes: (1) Display only green for easier adjustment and match to jig screen. Press "MENU", THEN PRESS "STATUS".
(2) Perform interpolation and data write to ROM after green adjustment. Once green has been confirmed to match jig screen, the jig screen can be removed. Do not readjust the green color after jig screen has been removed. This is now your reference color.
(3) Display green and red only and match red to green.
(4) Display all colors and match blue to green and red. Touch-up red color if necessary.
(5) Existing DATA in ROM can be read by pressing the SWAP button 2 times. This data can be used after replacing a component (CRT, DY, etc.) Where complete convergence adjustment is not necessary, be careful not to overwrite this data. DO NOT write cleared RAM data into ROM or a complete convergence adjustment will be necessary. Remember to try MAGIC FOCUS before starting convergence adjustment to minimize adjustment time.

2.13.6 Magic Focus Initialize

Adjustment Preparation

(1) Receive any NTSC signal. (Set is in Normal mode.)
(2) Digital convergence adjustment should have been completed.
(3) Set is in DCU adjustment mode.

Adjustment Procedure

(1) Press “PIP MODE” and then “PIP CH” to initialize Magic Focus. The initialize operation starts and several windows appear during this operation. It takes about 30 seconds or less.
(2) When green dots appear, initialize operation is finished.
(3) Turn power OFF.
(4) Receive any 1080i signal. Select Aspect 5/PICTURE FORMAT/SET UP of menu. (Set is in V. Squeeze mode.)
(5) Repeat above steps (1)~(3) gain.

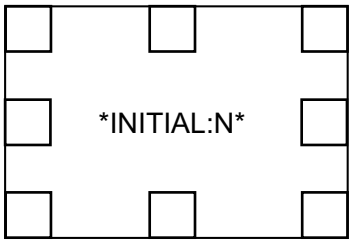

OSD: Normal mode: *INITIAL:N* V. Squeeze (HD through) mode: *INITIAL:S*.

Initialization Operation

NOTE: DCU has 2 modes, Normal and V. Squeeze (1080i through) mode.
Therefore, this adjustment needs to be done for both modes.

REMARKS

Another way to start the initialize operation:

(1) Press “SERVICE ONLY” Sw. on CONVER/FOCUS PWB to set DCU adj. mode.
(2) Press [PIP MODE] key on R/C. Then “ROM WRITE ?” is displayed for alarm. Next, press [PIP CH] key on R/C, the initalize operation starts. When green dots appear, initalize operation is finished.

NOTE: If there is an error messag, red dots or an error code, refer to page 57, CONVERGENCE ERRORS.

[PIP MODE] key is same function as current [MOVE] key.

2.13.1 Digital Convergence Remote Control

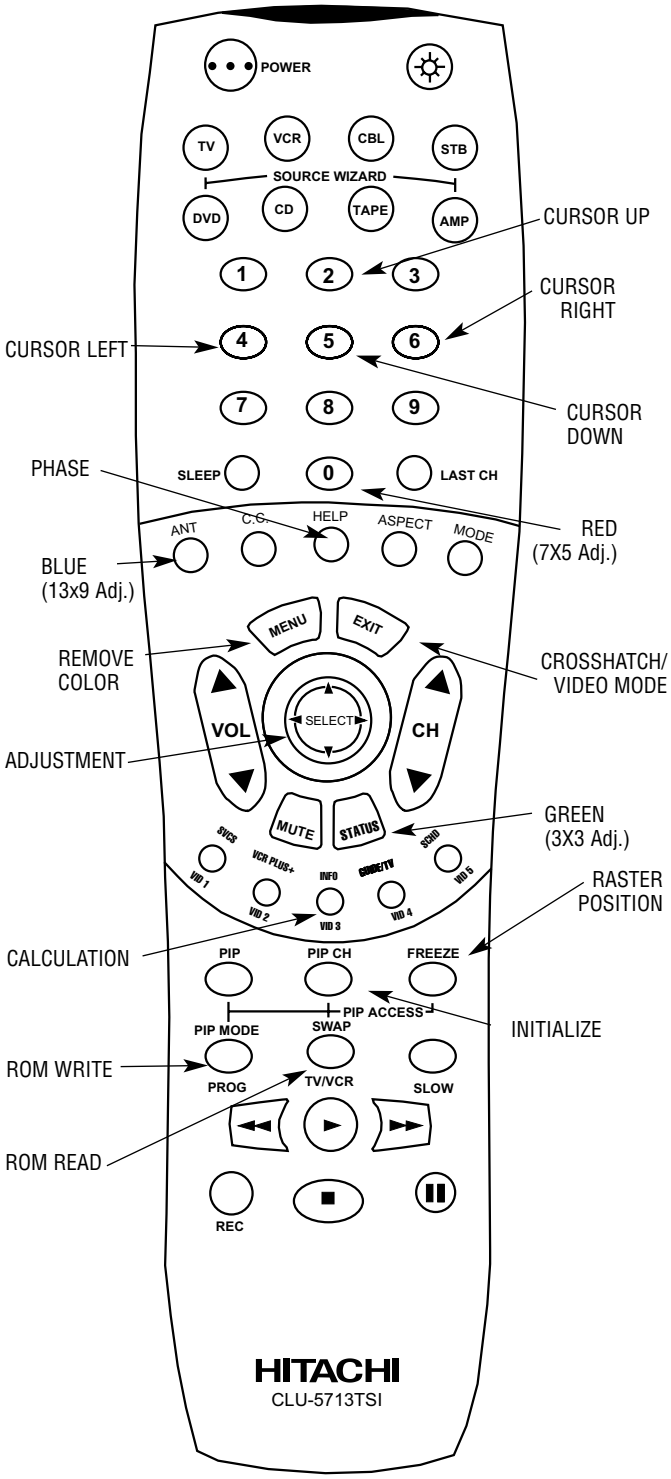

2.13 Blue defocus adjustment

Adjustment Preparation

(1) Optical and electrical focus adjustment should have been completed.
(2) The convergence adjustment should have been completed.
(3) Set Video conditions to factory preset.
(4) Input the cross-hatch signal.

Adjustment procedure

(1) Turn the B Focus VR (Focus Pack) fully clockwise.
(2) Adjust sticking out level of blue to specification shown in table below, by turning the (B) FOCUS VR counter clockwise.

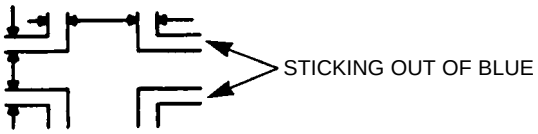

UNEVENNESS SPECIFICATION: ±1cd/m^2

Defocus sticking out specification

Screen Size	Blue sticking out
43”	1.0mm
53”	1.0mm
61”	1.0mm

Condition: User controls are set to the initial set positions (for shipment)

Measuring point-Screen center.

2.14 White balance adjustment

(1) Screen adjustment
(2) High light white balance.
(3) Low light white balance.

I^{2}C data for High light white balance

Green : G DRV (COOL) 3F (initial data)(Adjustable)
Red : R DRV (COOL) 3F (initial data)(Adjustable)
Blue : on FOCUS PACK EFPK

I^{2}C data for Low light white balance

Green : G CUT OFF (COOL) 80 (initial) (Adj. data)
Red : R CUT OFF (COOL) 80 (initial) (Adj. data)
Blue : B CUT OFF (COOL) 80 (initial) (Fixed data)

Adjustment Preparation

(1) Adjustment should start 20 min. or more after the TV power is turned ON.
(2) CUT OFF ADJ. should be finished.
(3) VIDEO control : Contrast is MAX., Others are center.
(4) Color temp. : COOL
(5) Signal:
  * Hight Light white Balance Adj.
    White raster 0.715Vpp (w/o sync., termination incidence : 75ohm.) 100IRE
  * Low Light white balance ADJ.
    White raster 0.180Vpp (w/o sync., termination incidence : 75ohm.) 25 IRE (The brightness equal to 20cd/m^2 at screen center)
(6) BLUE defocus ADJ. should be finished.
(7) The vertical incident illumination on the screen should be 20 Lux. or less.
(8) Go into I^{2}C service mode.

Adjustment Procedure

A. High Light W/B adjustment

(1) Receive signal for High Light white balance ADJ.
(2) Adjust white balance to 10800K±0 MPCD (x=0.278; y=0.280) at center of screen, using R DRV/ G DRV with remote control.

B. Low Light W/B adjustment

(1) Receive signal for Low Light white balance ADJ.
(2) Adjust white balance to 10800K±0 MPCE (x =0.278, y=0.280) at center of screen, using R CUT OFF/G CUT OFF/B CUT OFF with remote control. Do not touch screen VRs.
(3) Take Blue color as a reference color, then adjust Low Light W/B by increasing other two colors CUT OFF data. Do not change G CUT OFF data.

Repeat A & B two or three times, until no adjustment is needed (white balance tracking-GOOD). If W/B tracking is not good, set all data (BothDRV and CUT OFF) to inital data, and change reference color to different color.

Note: If Low Light adj. spec cannot be followed, apply previous adj. spec. (adjust by eye.)

Adjustment preparation

(1) Start adjustment after the power is turned on for 20 minutes or more.
(2) The vertical incident illumination on the screen should be 20 lux or less. (Room should be dark).
(3) Set the video settings (CONTRAST: max, others: center) to standard condition.
(4) The blue defocus and cut off adjustments should be completed.
(5) For low light white balance adjustment, input a white raster signal level of 0.286 Vp-p (Video input level).
(6) For high light white balance adjustment, input a white raster signal level of 0.715Vp-p (Video input level).
(7) Confirm R and G Drive (cool) data is 3F.
(8) Set Video Advanced Settings-Color Temperature to COOL.

Adjustment procedure

(1) Select the input signal for high brightness (Video level = 0.715Vpp).
(2) Adjust the high brightness white balance by changing I²C menu (R and G DRV cool mode only).
(3) Select the signal for low brightness (Video level = 0.286Vpp)
(4) Adjust the low brightness white balance.
(5) Check that high brightness white balance is still obtained. If it is not, return to step (2).

White balance =	10800° K ± 0 MPCD
Color coordinate =	x …… 0.278
	y …… 0.280
Normal:	7200˚K
Warm:	6500˚K

2.15 Sub brightness adjustment

Adjustment preparation

(1) Start adjustment after the power is turned ON for 20 minutes or more.
(2) Receive the color bar signal.
(3) Set video conditions to factory preset.
(4) The vertical incident illumination on the screen should be 20 lux or less. (Room should be dark).

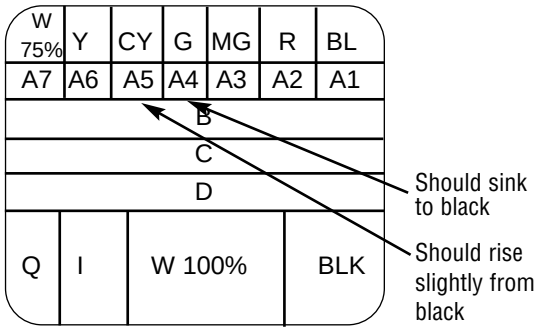

Adjustment procedure

(1) Go to “Sub Brightness” adjustment in I²C ADJUST mode (press Input and Power button on Control panel at same time), using thumb stick ▲, ▼ and then thumb stick ►.
(2) Then adjust “Sub Brightness” using thumb stick ◄, ► to increase or decrease the value, according to figure. (Visually adjust).
(3) After adjustment, press MENU button to exit I²C ADJUST mode. (Data is stored in memory).

Note: When selecting SUB-BRIGHTNESS mode the microprocessor sets the CONTRAST and COLOR to MIN. automatically, but make sure that the other conditions are center.
Directly observe the screen by eye without using a mirror.

WHITE BALANCE ADJUSTMENT FLOW CHART

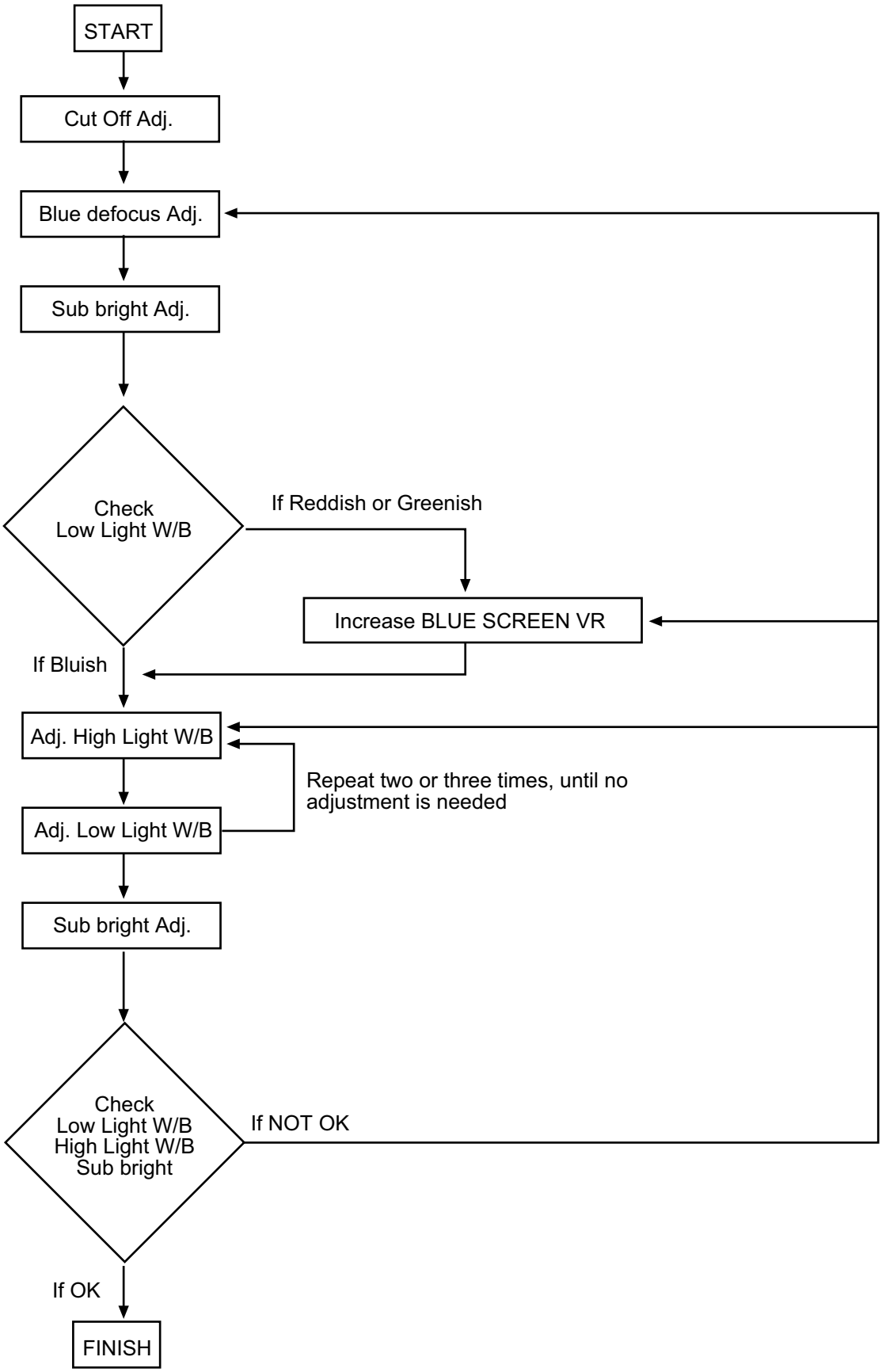

2.16 Sub Picture Signal Amplitude Adjustment

Adjustment preparation

(1) Sub-brightness adjustment should be finished.
(2) Start adjustment about 20 minutes after the power switch is turned on.
(3) Condition should be as follows:
Contrast : Max
Brightness : Center
(4) Press PIP button of R/C unit.
(5) The previous selected PinP will appear on the screen.
(6) Select SINGLE mode and receive NTSC white signal (amplitude 2.0Vp-p=Open), main-picture and sub-picture (Do not use component signal).
(7) Connect probe on the P852 (CPT PWB- Green) to check sub-picture amplitude.

Adjustment procedure

(1) Display PIP SINGLE picture.
(2) Go Into I^2C service mode and press MENU button until TA1270-M is displayed on screen.
(3) Press “PIP CH” button of R/C, “TA1270-M” change to “TA1270-S”.
(4) Observe P852 on the CPT PWB and change the “TA1270-S SUB CNT” I^2C data so that the amplitude of the sub-picture is the same level as that of the main picture.

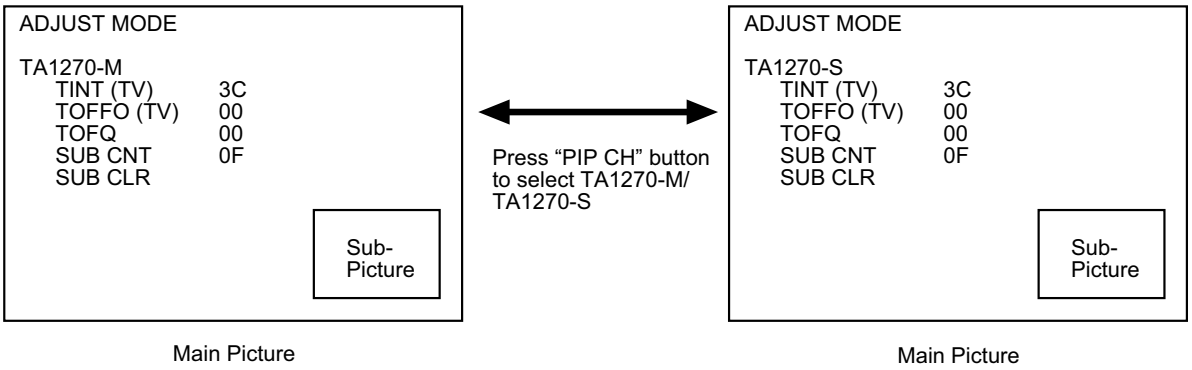

*Wave form of P852 (green Cathode)

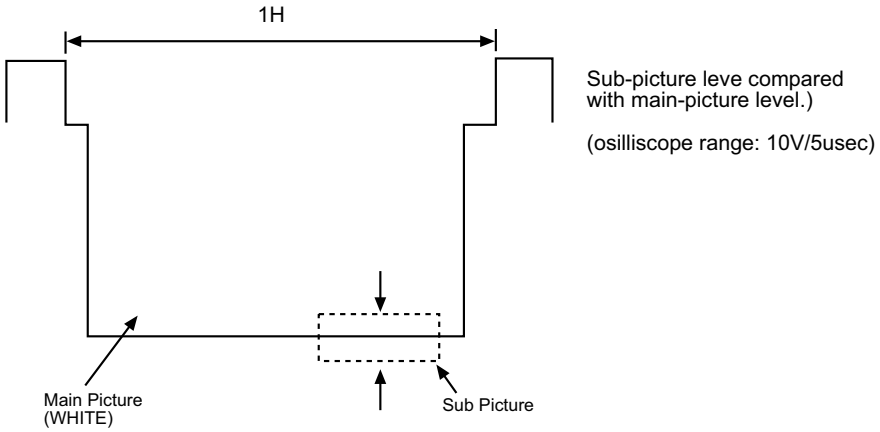

Adjustment specification: ±1V
Quality control specification: ±3V

2.17 Horizontal position adjustment

Adjustment preparation

(1) Set video conditions to factory preset.
(2) DIGITAL CONVERGENCE adjustment should be finished. (Normal mode and 1080i through mode).

Adjustment procedure

NORMAL MODE

(1) Receive circle pattern signal.
(2) Go to I²C Adjustment mode by pressing INPUT and POWER button on control panel at the same time.
(3) Choose H. POSI item by using thumb stick ▲,▼.
(4) Adjust HOR. POSITION as following by using thumb stick ◀,▶.

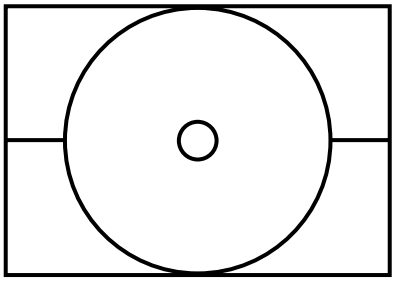

Spec: Balance Left/Right side display position for H. position. H. size marker 0.7~1.5.

1080i THROUGH MODE

(1) Input 1080i (fH=33.75kHz) component circle pattern signal to COMPONENT 3 or 4.
(2) Go to I²C Adjustment mode by pressing INPUT and POWER button on control panel at the same time.
(3) Choose H. POSI item by using thumb stick ▲,▼.
(4) Adjust HOR. POSITION as following by using thumb stick ◀,▶.

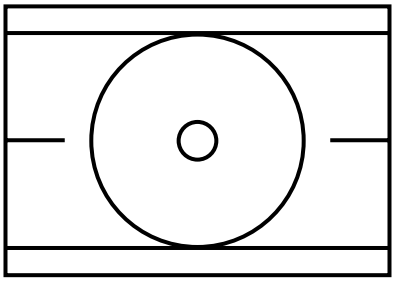

Spec: Balance Left/Right side display position for H. position.

Balance Top/Bottom side display position for V. position (check only).

2.18 Scanning area check

Checking condition

NORMAL MODE

(1) Digital convergence adjustment should have been completed.
(2) Receive the circle pattern signal.
(3) Brightness/Contrast - standard condition
Contrast:max
Other controls:center position
(4) Check that the scanning area matches with the following drawing.

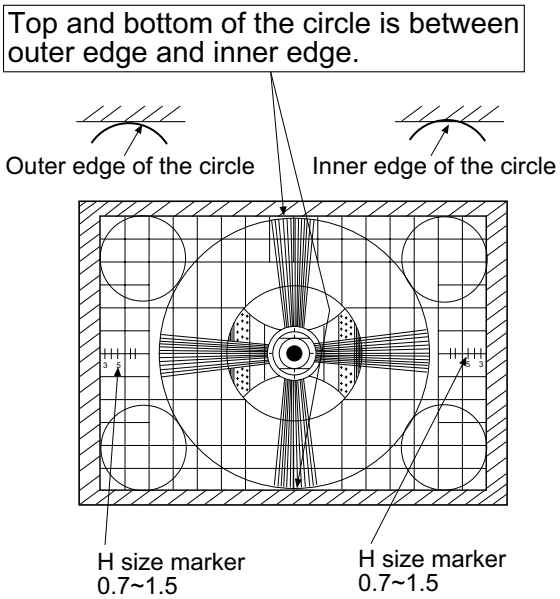

1080i THROUGH MODE

(1) Receive 1080i circle pattern No.59 of LT1611*, LT1608* of LEADER signal generator.
SET UP: ASPECT 5/PICTURE FORMAT/SET UP MENU

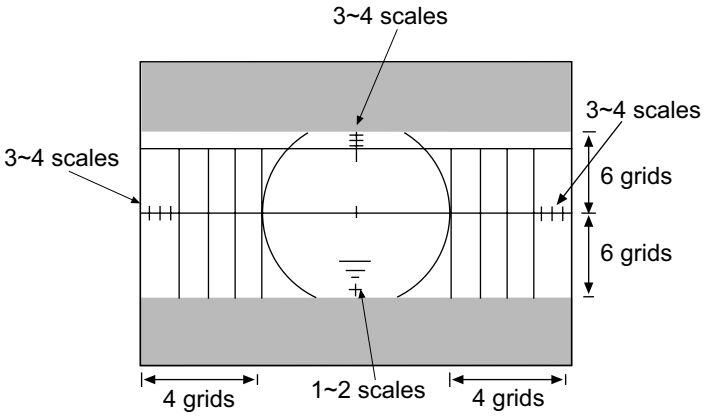

- LT1611 : Programmable Video Generator
- LT1608 : Video Encoder

(2) Receive 1080i circle pattern of LT-449 (Leader).

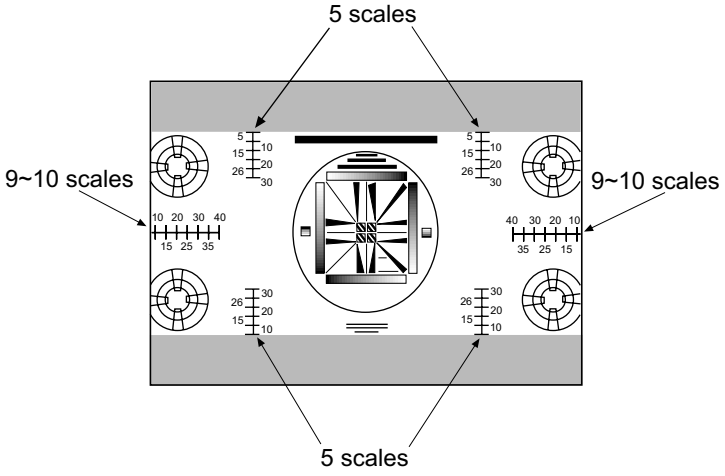

2.19 Raster distortion check

Checking condition

(1) Digital convergence adjustment should have been completed.
(2) Receive the cross-hatch signal (internal signal of the the set is acceptable).
(3) Brightness/Contrast --- standard condition
Contrast : max
Other controls : center position
(4) Check the raster distortion specification: Value shown in the table below or less.
A ~ D
I ~ L ---Measure the winding of the outside line.

(unit: mm)

Item		Symbol	53”	61”
Top/Bottom pincushion distortion		A,B	±6	±6
Right/Left pincushion distortion		C,D	±4	±5
Center line tilt	Vertical line	5	6	6
	Horizontal line	5	6	6
Center line winding	Vertical line	±3	±3	±4
	Horizontal line	±3	±3	±4
Trapezoidal distortion	Vertical line	4	5	5
Skew distortion	Horizontal line	5	6	6

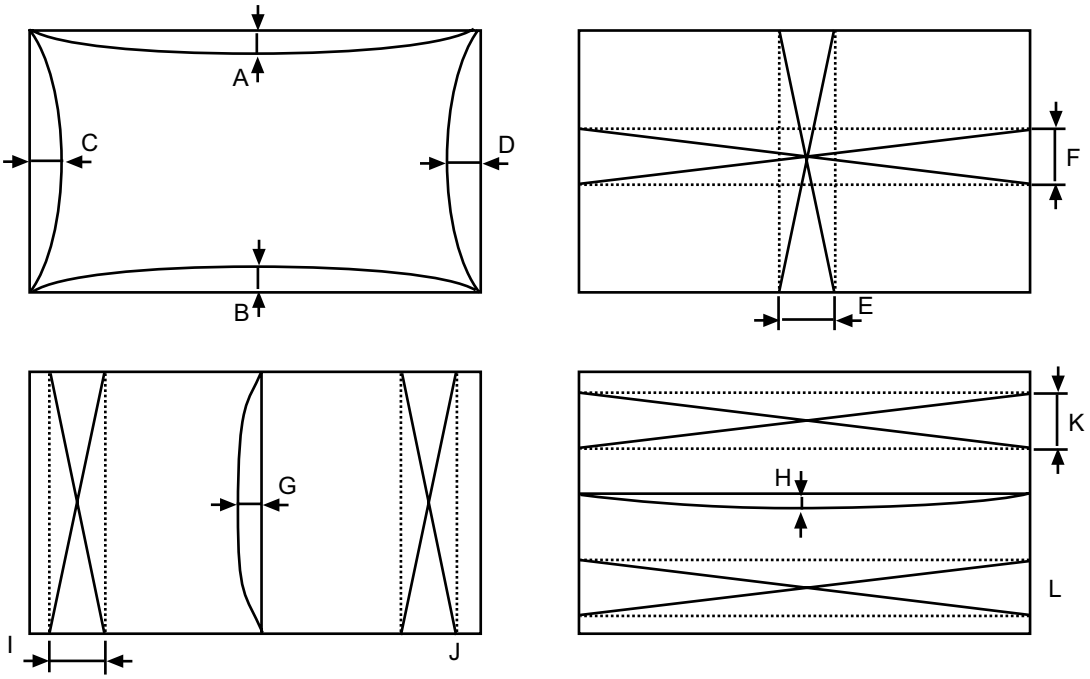

5. Convergence Errors.

If an error message or code appears while performing MAGIC FOCUS or initialize (PIP MODE, PIP CH in DCU service mode) follow this confirmation and repair method.

1. Turn on power and receive any signal.
2. Press service switch on Power/Deflection board.
3. Press “SWAP” then “PIP CH” on remote control.
4. Error code will be displayed in bottom right corner of screen. If there is no error, an “INITIAL OK” message will appear on screen.

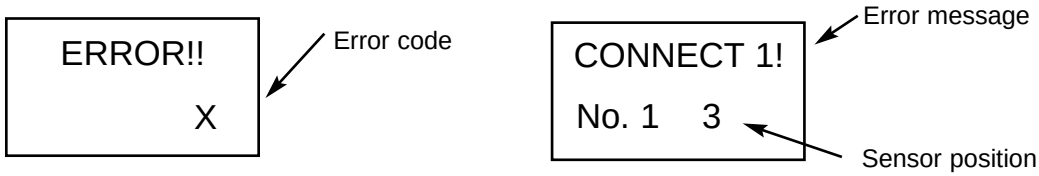

5. Follow repair table for errors.

DCU REPAIR TABLE

Error Code	Error Display Code	Countermeasure	Application	
			Initialize	Magic Focus
1	VF Error	Replace DCU	X	X
2 *2	Connect 1	1. Darken Outside Light 2. Placing of sensor 3. Is pattern hitting sensor 4. Check connection and solder bridge of sensor 5. Replace sensor 6. Replace sensor P.W.B. 7. Sensor Connector check 8. Replace DCU 9. Adjustment check (H/V size, centering)	X	—
3*2	A/D Level	Same as Error Code 2	X	X
4	Over Flow	1. Check the placement of sensor 2. Adjustment check (H/V size, centering) 3. Conv. amp. gain check *1 (check resistor values only)	X	X
5	Convergence	Same as Error Code 4	X	X
7	Operation	Same as Error Code 4	—	X
9	Connect 2	Same as Error Code 2	X	X
10	Noise	Input strong field signal Check the wiring of connector between sensor and DCU	X	X
11	Sync	Input strong field signal Check the wiring of connetor between sensor and DCU	X	X

*1 -- RK 41, 46, 50, 54, 58, 62 check these resistors.

*2 Sensor Position

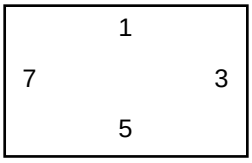

(View from front side)

3. ADJUSTMENT POINT
3.1 CRT, cabinet locations

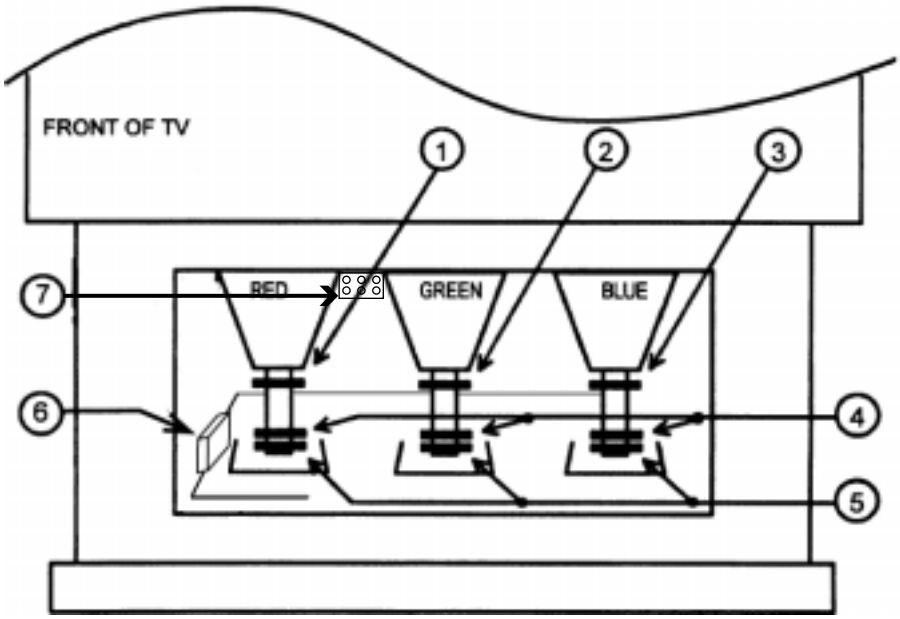

1. CENTERING MAGNET FOR RED PRT
2. CENTERING MAGNET FOR GREEN PRT
3. CENTERING MAGNET FOR BLUE PRT
4. 4-POLE MAGNET FOR BEAM FORM ADJUSTMENT
5. BEAM ALIGNMENT MAGNET
6. DIGITAL CONVERGENCE MODULE (On CONV/MAGIC FOCUS Board)
7. FOCUS PACK (Top Adjustments for Screen, Bottom for Focus)

3.2 MAIN CHASSIS (SIGNAL PWB)

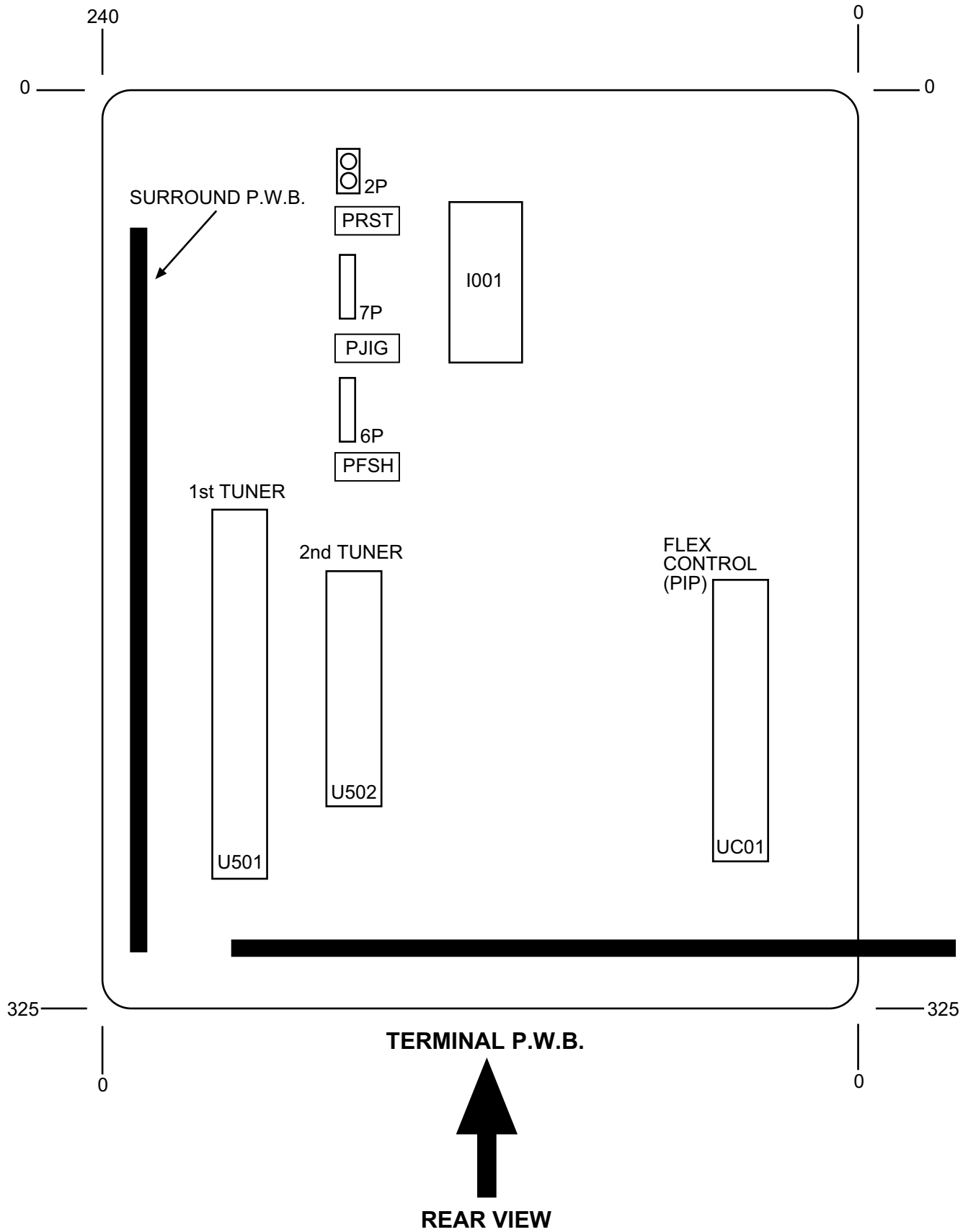

3.3 MAIN CHASSIS (DEFLECTION/CONVERGENCE PWB)

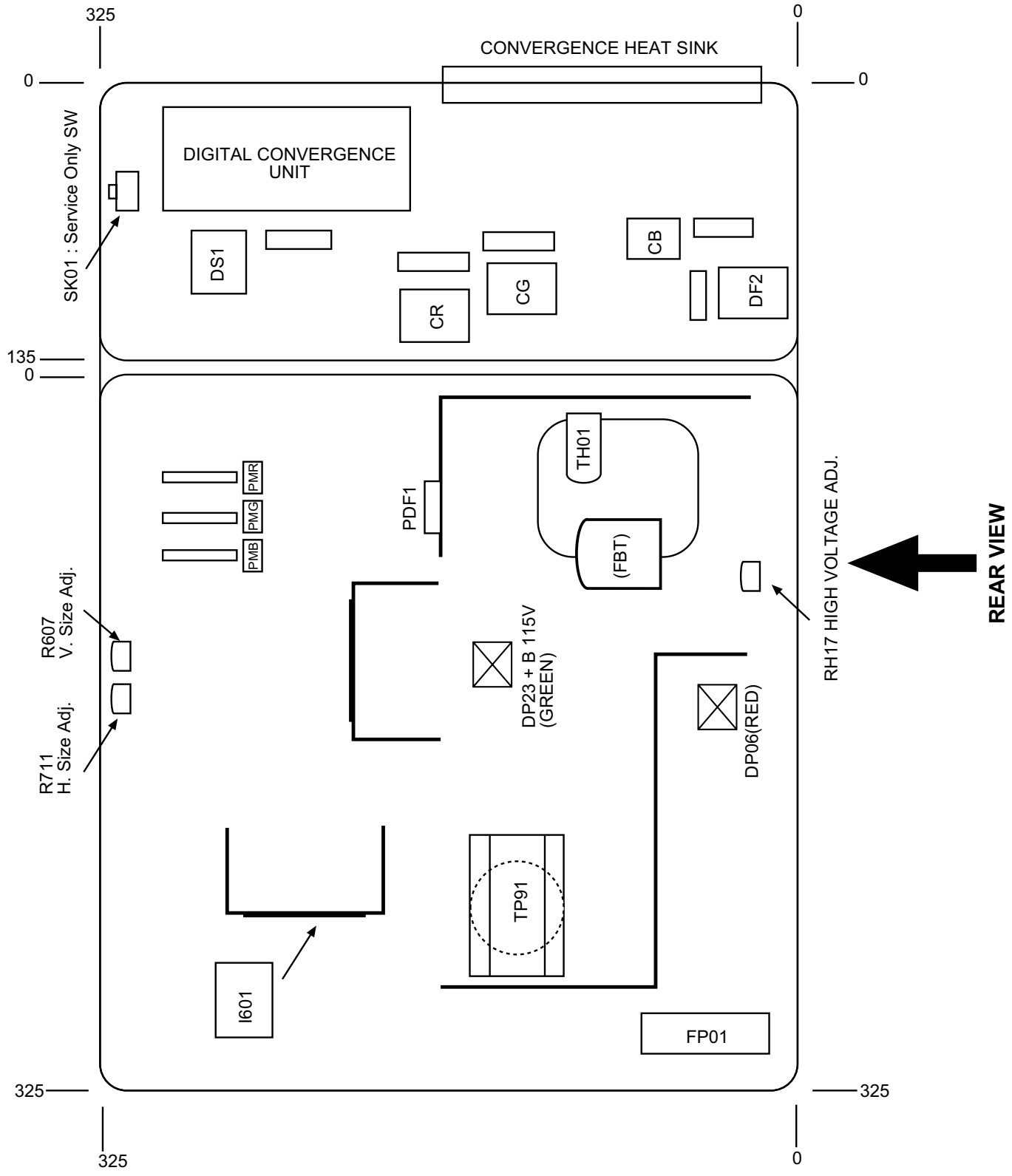

3.3 MAIN CHASSIS CONT. (DEFLECTION/POWER PWB)

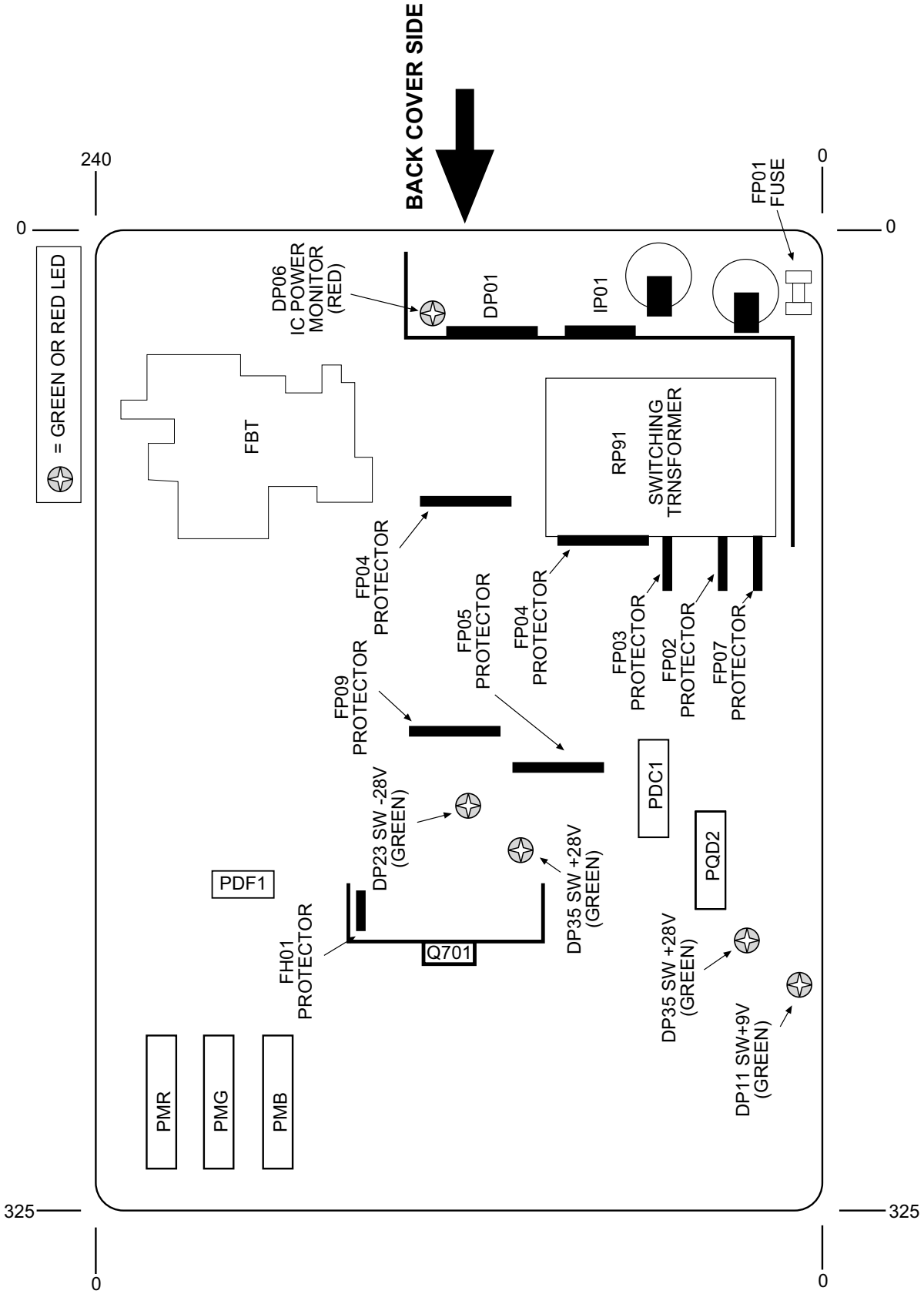

3.4 MAIN CHASSIS (POWER SUPPLY PWB)

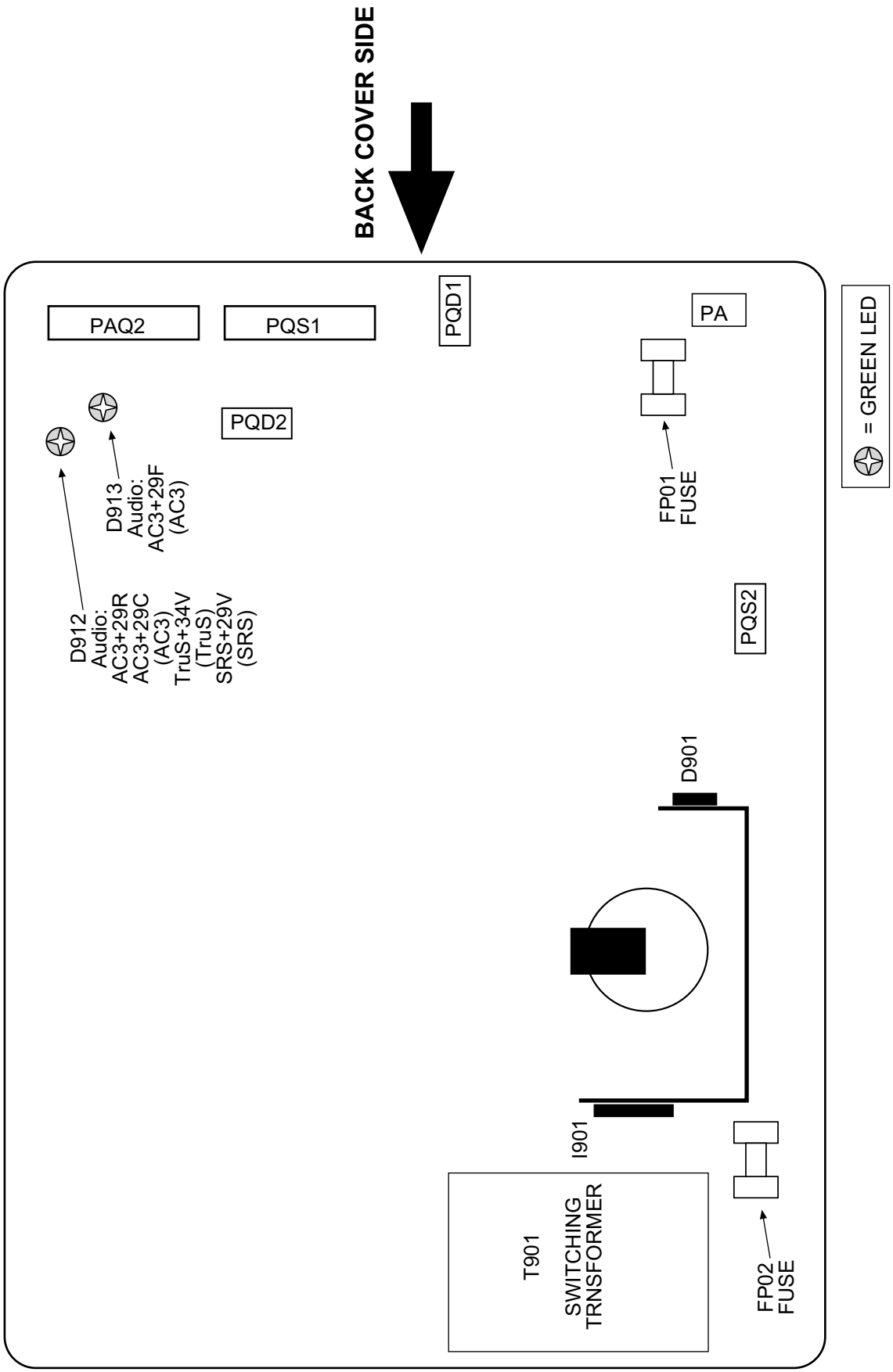

3.5 CPT (R) (G) (B), Focus Pack, Control P.W.B.

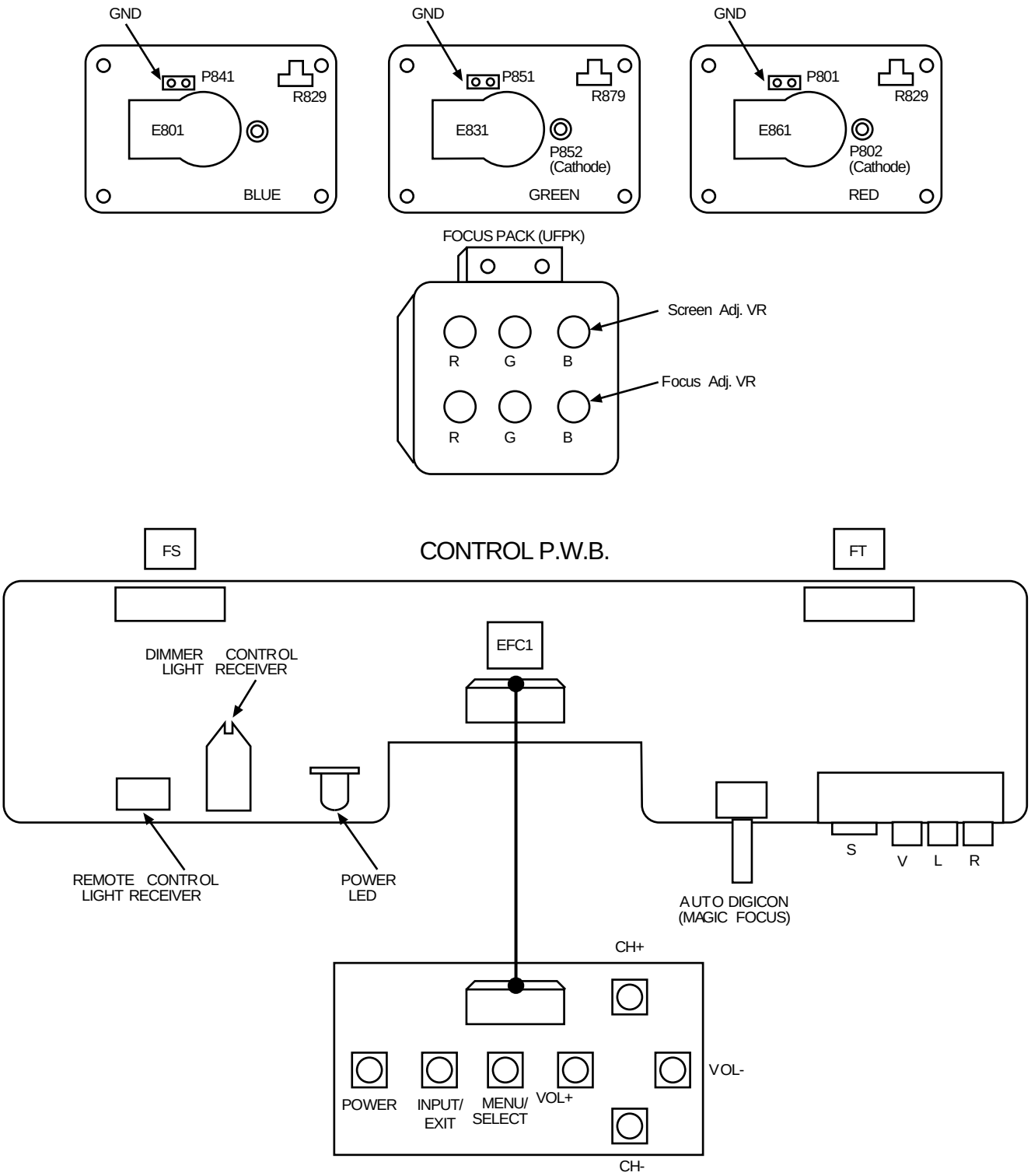

TROUBLE SHOOTING FLOWCHART

1. No raster and no power (How to check Diagnosis LED)

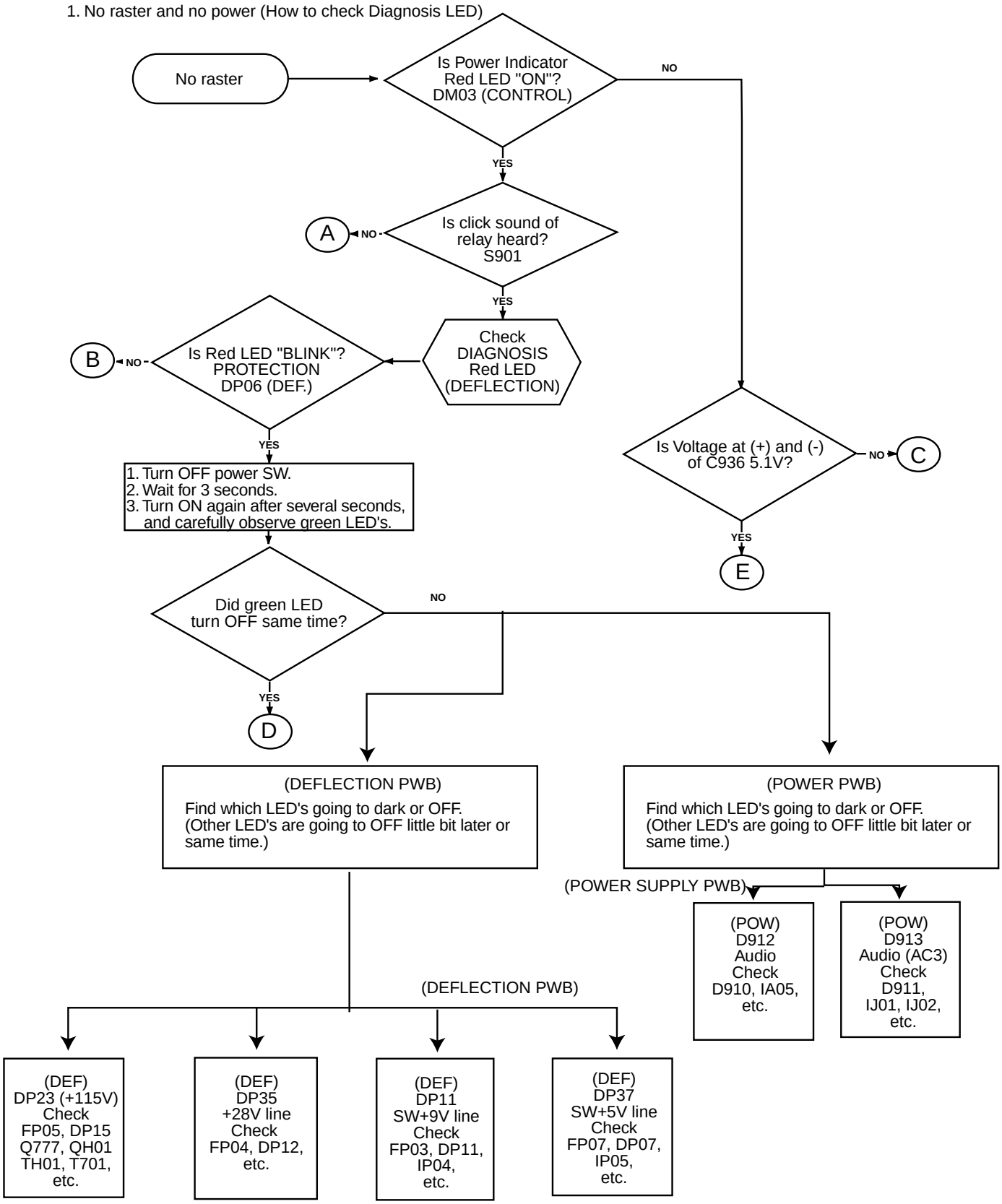

TROUBLE SHOOTING FLOWCHART

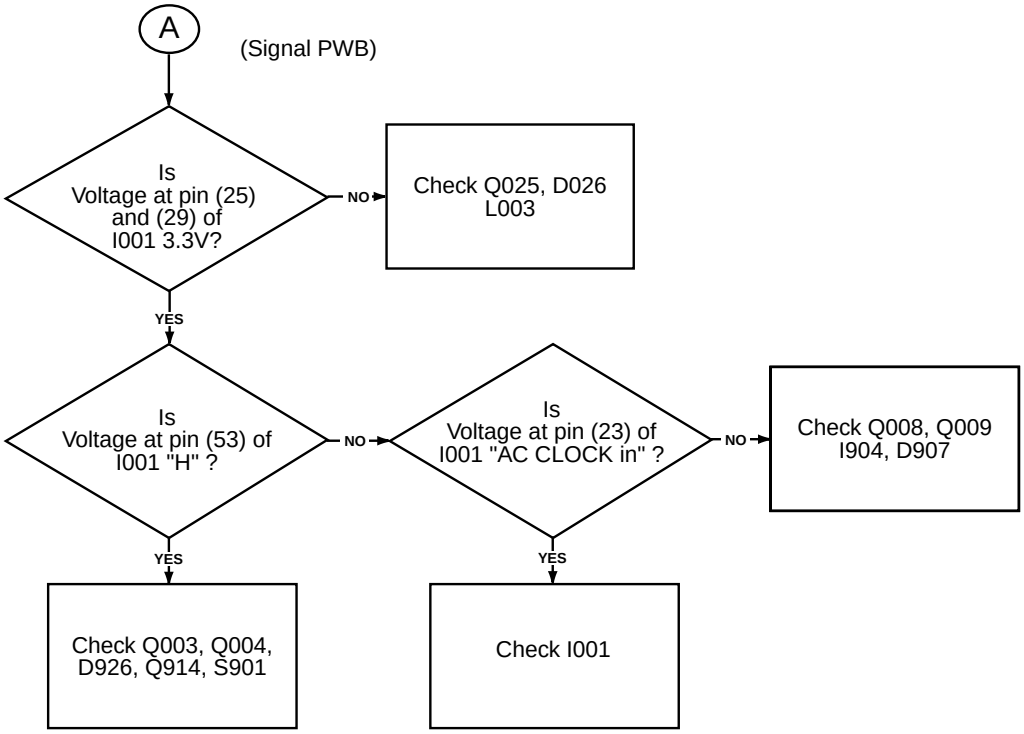

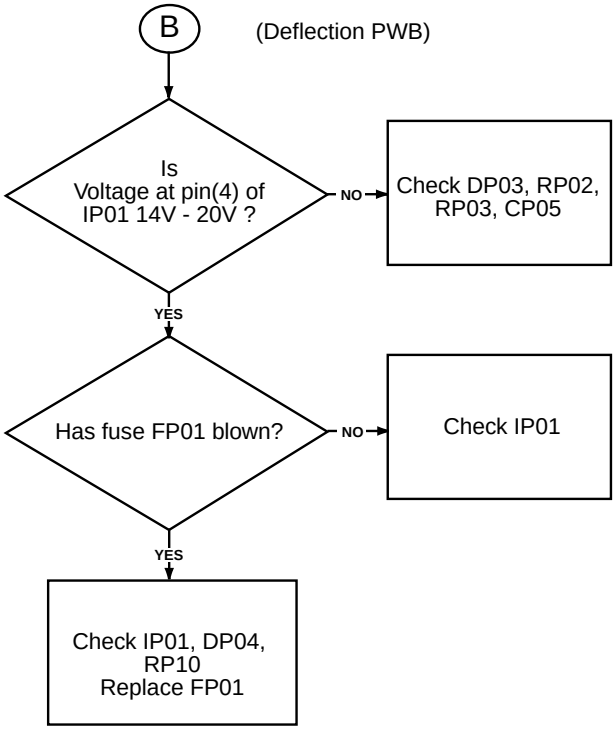

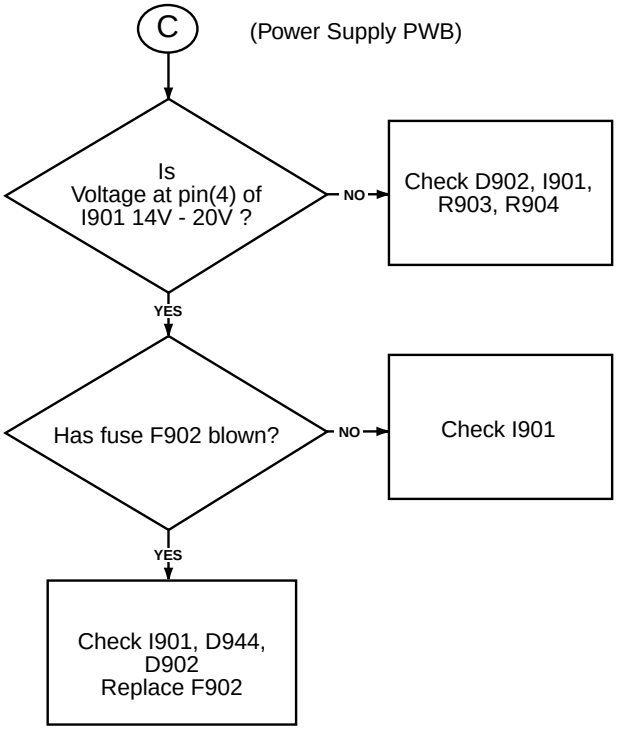

TROUBLE SHOOTING FLOWCHART

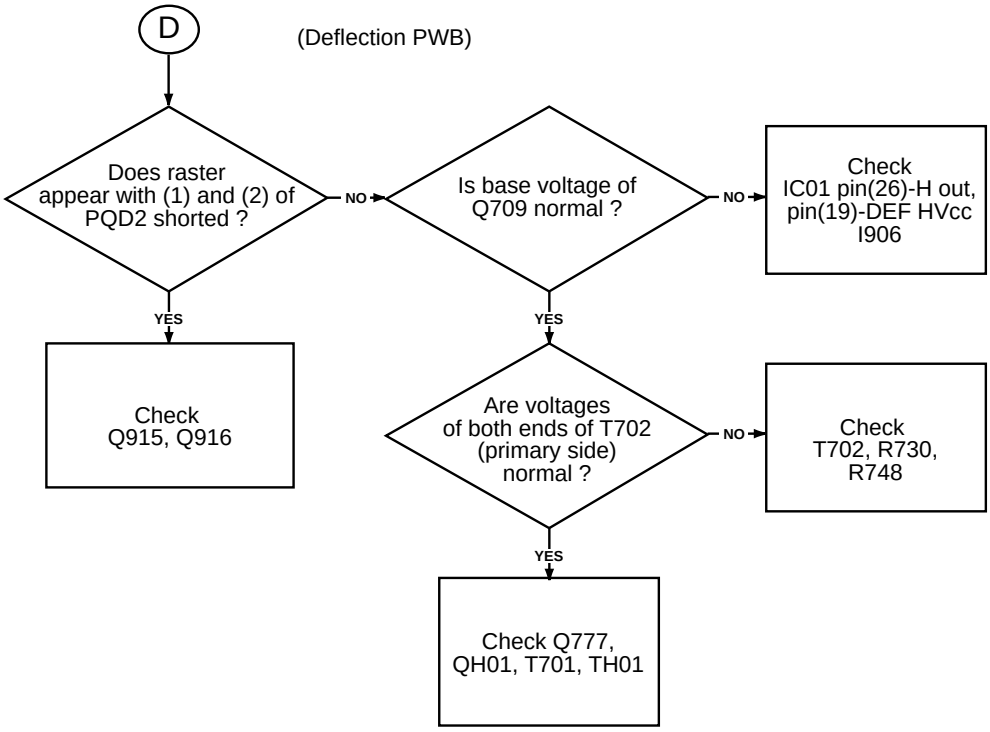

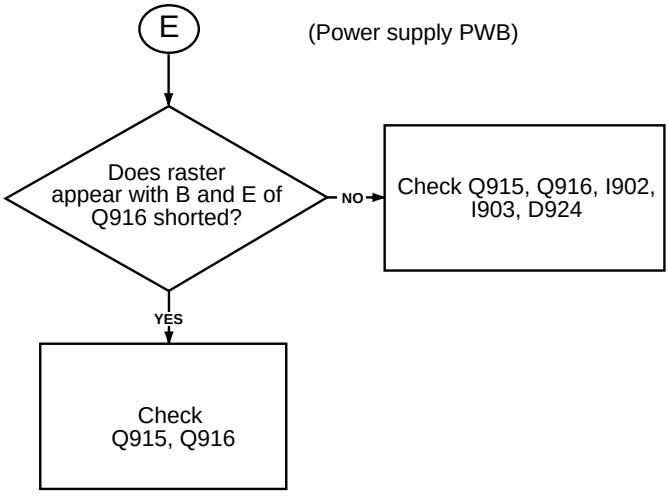

WAVEFORMS AT EACH SECTION

Numbers inside circle correspond to locations shown in the circuit diagram.

1 I001 Pin 2

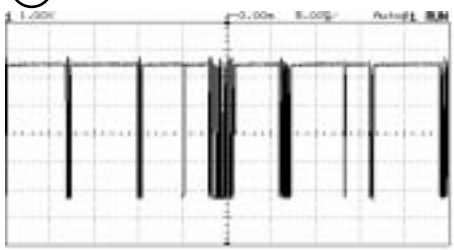

2 I001 Pin 24

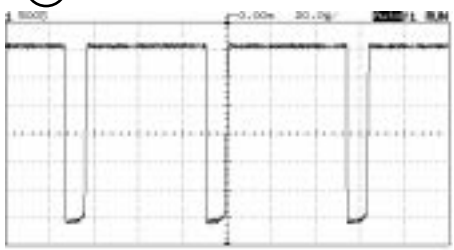

3 I001 Pin 3

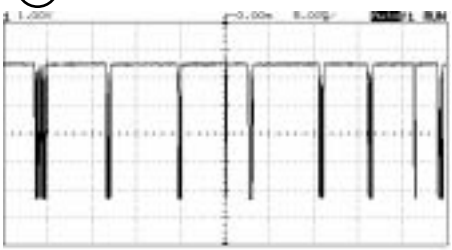

4 I001 Pin 37

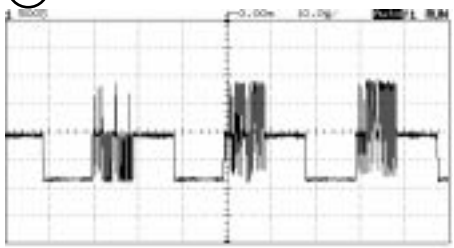

5 I001 Pin 38

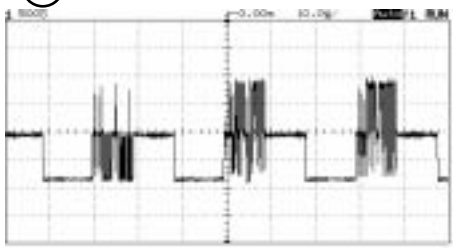

6 I001 Pin 39

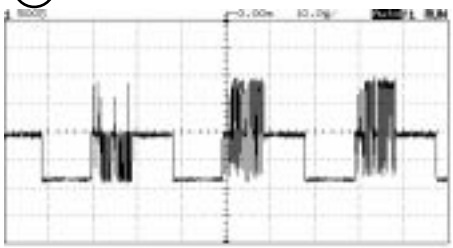

7 I001 Pin 45

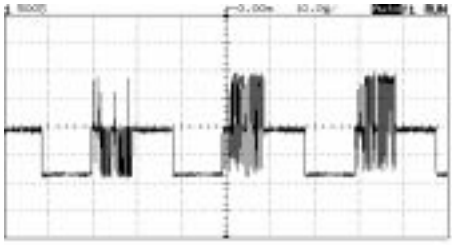

8 I001 Pin 46

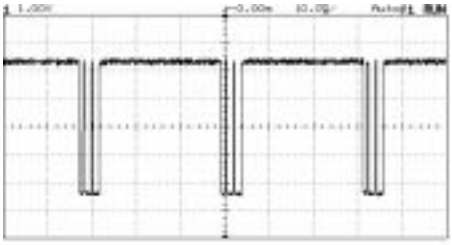

9 I001 Pin 49

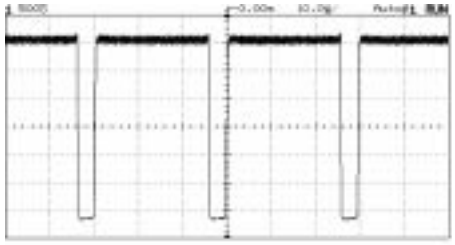

10 I001 Pin 51

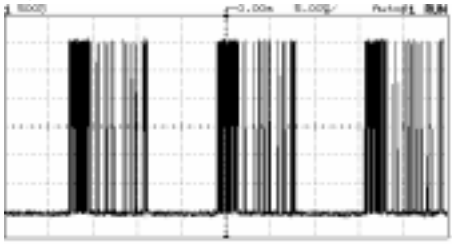

11 I001 Pin 55

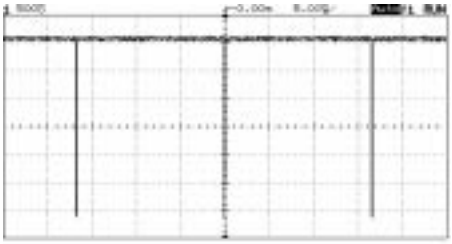

12 I001 Pin 58

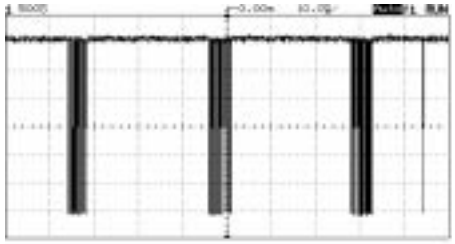

WAVEFORMS AT EACH SECTION

Numbers inside circle correspond to locations shown in the circuit diagram.

(13) I001 Pin 59

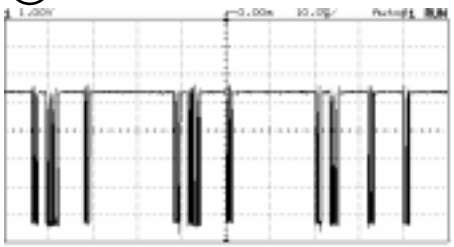

(14) I001 Pin 60

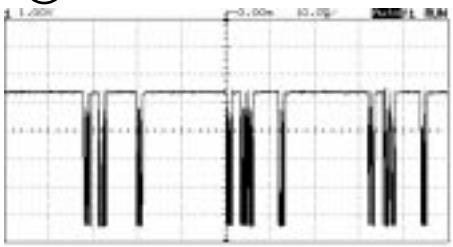

(15) I501 Pin 10

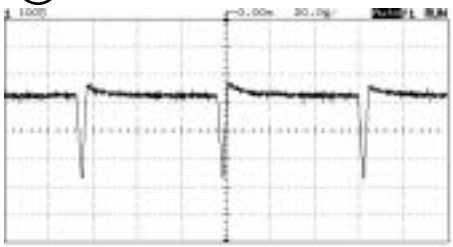

(16) I501 Pin 13

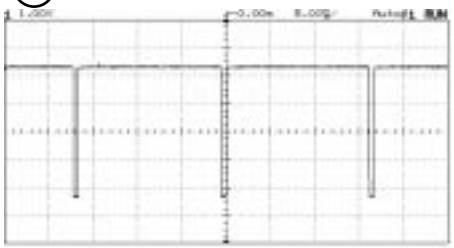

(17) I501 Pin 14

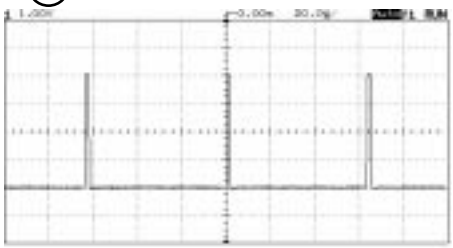

(18) I501 Pin 20

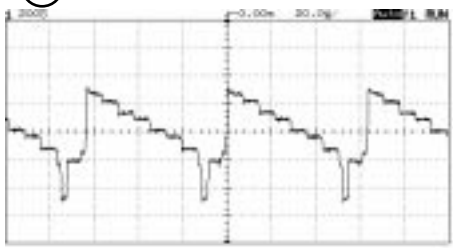

(19) I501 Pin 21

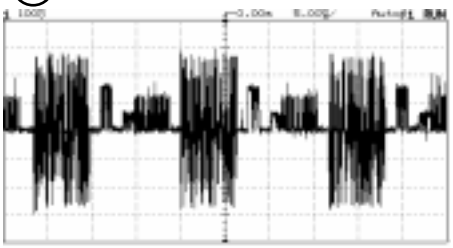

(20) I501 Pin 22

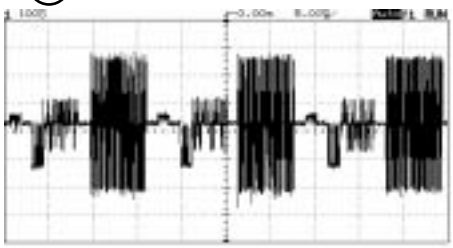

(21) I501 Pin 37

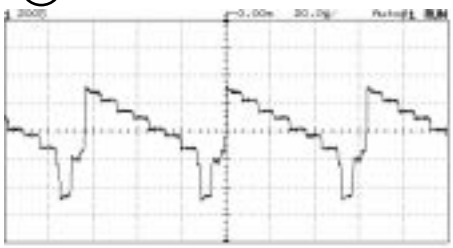

(22) I501 Pin 6

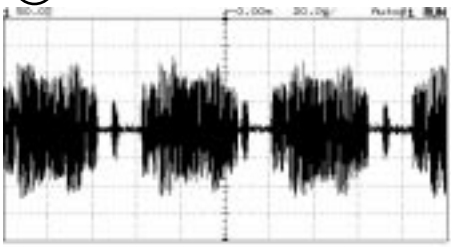

(23) I501 Pin 8

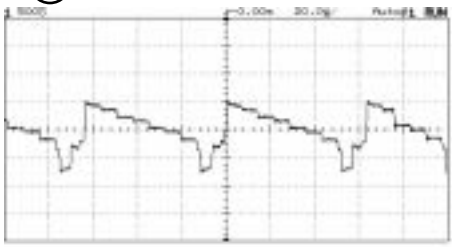

(24) I601 Pin 1

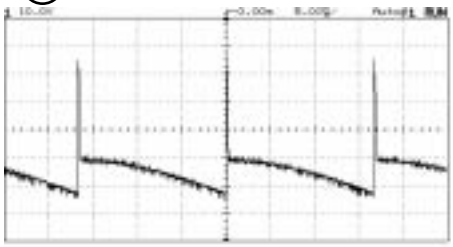

WAVEFORMS AT EACH SECTION

Numbers inside circle correspond to locations shown in the circuit diagram.

(25) I601 Pin 11

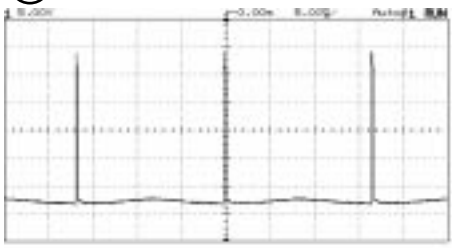

(26) I601 Pin 7

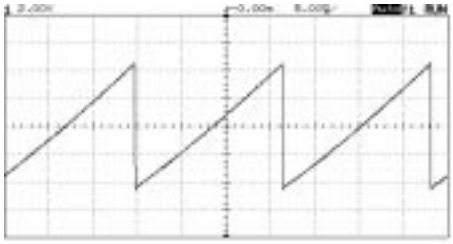

(27) I601 Pin 24

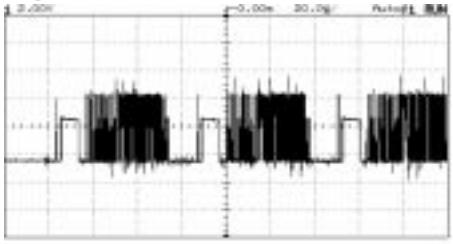

(28) PSD2 Pin 5

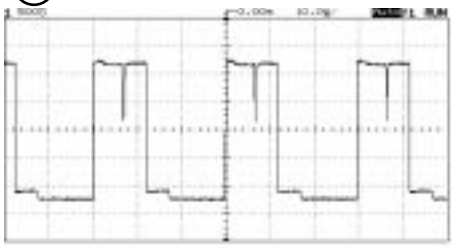

(29) PSD2 Pin 7

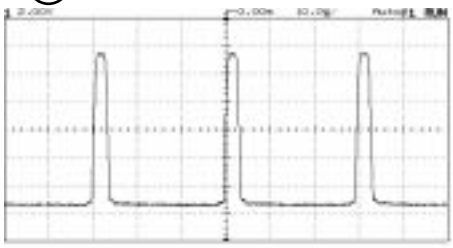

(30) PSD2 Pin 11

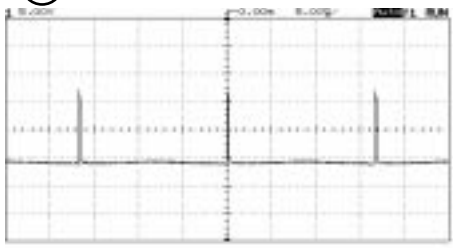

(31) PSD2 Pin 9

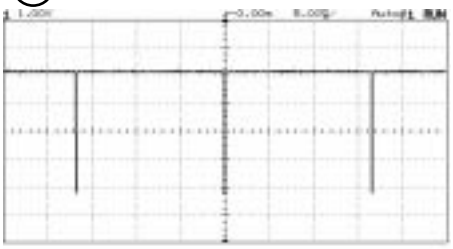

(32) U501 Pin 18

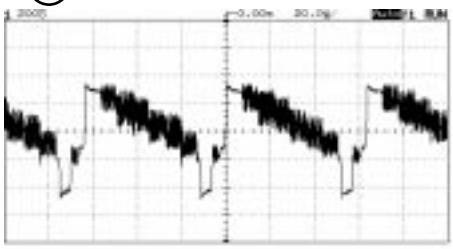

(33) U502 Pin 18

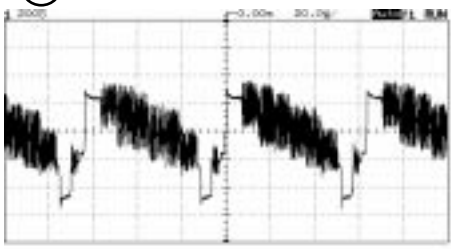

(34) UC01 Pin 12

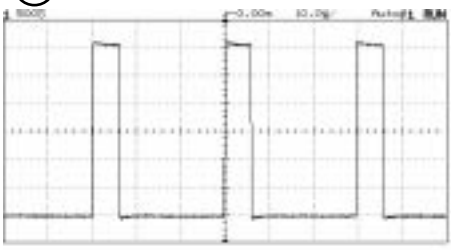

(35) UC01 Pin 4

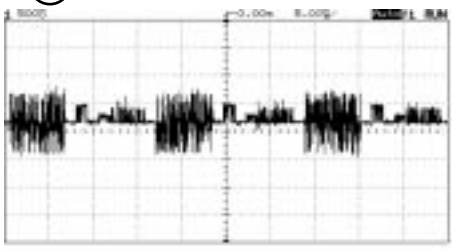

(36) UC01 Pin 6

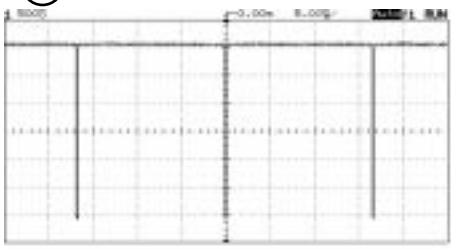

WAVEFORMS AT EACH SECTION

Numbers inside circle correspond to locations shown in the circuit diagram.

(37) UC01 Pin 7

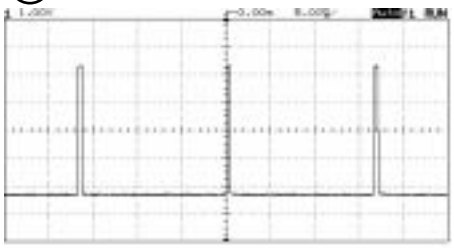

DC Voltages

Signal (1/4)

Circuit No.	Pin No.	Voltage DC
I001	1	0.0
	2	4.8
	3	4.8
	4	3.8
	5	3.5
	6	1.6
	7	3.5
	8	3.3
	9	2.9
	10	0.0
	11	0.0
	12	0.0
	13	0.0
	14	0.0
	15	0.0
	16	0.0
	17	0.0
	18	0.0
	19	0.0
	20	3.5
	21	0.0
	22	0.0
	23	1.8
	24	2.9
	25	3.4
	26	2.2
	27	2.5
	28	0.6
	29	0.0
	30	0.6
	31	2.5
	32	1.5
	33	3.5
	34	2.0
	35	1.7
	36	1.8
	37	0.0
	38	0.0
	39	0.0
	40	0.0
	41	1.6
	42	1.6
	43	0.0
	44	0.0
	45	4.7
	46	4.5
	47	1.9
	48	1.9
	49	3.0
	50	3.5
	51	0.0
	52	3.5
	53	3.2
	54	3.5

Circuit No.	Pin No.	Voltage DC
I001	55	3.5
	56	0.0
	57	3.4
	58	3.4
	59	4.6
	60	4.6
	61	3.5
	62	1.8
	63	1.8
	64	0.0
I002	1	3.5
	2	0.0
	3	3.5
I003	1	0.0
	2	0.0
	3	0.0
	4	0.0
	5	4.7
	6	4.7
	7	0.0
	8	5.1
I004	1	5.1
	2	0.0
	3	0.0
	4	3.5
	5	0.0
	6	0.0
	7	0.0
	8	0.0
	9	0.0
	10	0.0
	11	0.0
	12	0.0
	13	0.0
	14	0.0
	15	0.0
	16	5.1
	17	4.9
	18	0.0
	19	0.0
	20	5.1
I005	1	2.6
	2	2.3
	3	0.0
	4	0.0
	5	0.0
	6	0.0
	7	0.0
	8	0.0
	9	0.0
	10	0.0
	11	0.0
	12	2.9
	13	2.9

Circuit No.	Pin No.	Voltage DC
I005	14	2.9
	15	2.3
	16	8.9
I006	1	0.0
	2	4.9
	3	4.1
	4	4.1
	5	4.7
	6	0.4
	7	4.7
	8	0.0
	9	0.0
	10	4.9
	11	0.0
	12	0.0
	13	5.0
	14	4.8
	15	4.7
	16	5.0
I007	1	0.0
	2	0.3
	3	0.4
	4	1.9
	5	0.4
	6	0.4
	7	0.4
	8	0.0
	9	5.0
	10	0.9
	11	0.0
	12	0.0
	13	0.0
	14	4.7
	15	4.7
	16	5.0
Q001	E	0.0
	B	0.0
	C	3.4
Q002	E	3.5
	B	3.4
	C	0.0
Q003	E	0.0
	B	0.8
	C	0.0
Q004	E	0.0
	B	0.0
	C	1.9
Q005	E	0.0
	B	0.0
	C	3.4
Q006	E	0.0
	B	-1.5
	C	3.0
Q007	E	0.0
	B	0.2
	C	2.9

Circuit No.	Pin No.	Voltage DC
Q008	E	5.7
	B	5.8
	C	0.5
Q009	E	5.2
	B	5.2
	C	0.0
Q010	E	0.0
	B	0.0
	C	2.9
Q011	E	5.8
	B	5.8
	C	0.6
Q012	E	5.8
	B	5.2
	C	0.0
Q013	E	4.6
	B	5.2
	C	8.9
Q014	E	4.6
	B	5.2
	C	8.9
Q015	E	3.0
	B	2.4
	C	0.0
Q016	E	2.4
	B	3.0
	C	8.9
Q017	E	0.0
	B	0.8
	C	0
Q018	E	3.5
	B	2.8
	C	3.4
Q019	E	0.0
	B	0.4
	C	1.9
Q020	E	0.0
	B	0.4
	C	1.6
Q021	E	0.0
	B	0.0
	C	35.1
Q022	E	35.1
	B	34.9
	C	0.0
Q023	E	0.0
	B	0.0
	C	34.9
Q024	E	3.1
	B	3.1
	C	0.0
Q025	E	3.6
	B	4.1
	C	5.1
Q026	E	0.0
	B	0.7
	C	0.0

DC Voltages

Signal (2/4)

Circuit No.	Pin No.	Voltage DC
I301	1	0.0
	2	0.0
	3	1.6
	4	1.6
	5	1.6
	6	1.6
	7	1.6
	8	1.6
	9	1.6
	10	1.1
	11	2.9
	12	2.5
	13	1.3
	14	1.3
	15	1.3
	16	0.0
	17	2.6
	18	2.6
	19	1.9
	20	2.1
	21	0.7
	22	1.6
	23	0.0
	24	1.6
	25	2.1
	26	0.0
	27	0.0
	28	0.0
	29	0.0
	30	0.0
	31	1.6
	32	3.3
	33	0.0
	34	0.0
	35	0.0
	36	0.0
	37	0.0
	38	0.0
	39	0.0
	40	0.0
	41	0.0
	42	0.0
	43	0.0
	44	0.0
	45	3.3
	46	3.3
	47	1.9
	48	0.0

Circuit No.	Pin No.	Voltage DC
I301	49	0.0
	50	1.6
	51	0.0
	52	0.0
	53	3.4
	54	0.0
	55	0.0
	56	0.0
	57	3.3
	58	0.0
	59	4.6
	60	4.6
	61	0.0
	62	0.0
	63	0.0
	64	3.3
	65	0.0
	66	0.0
	67	0.0
	68	0.0
	69	0.0
	70	0.0
	71	0.0
	72	0.0
	73	0.0
	74	0.0
	75	0.0
	76	0.0
	77	0.0
	78	0.0
	79	0.0
	80	0.0
	81	3.3
	82	0.0
	83	0.0
	84	0.0
	85	1.1
	86	0.0
	87	0.0
	88	1.2
	89	0.9
	90	1.1
	91	1.6
	92	3.3
	93	0.0
	94	0.0
	95	3.3
	96	0.0

Circuit No.	Pin No.	Voltage DC
I301	97	0.0
	98	0.6
	99	1.6
	100	3.3
I302	1	0.0
	2	0.0
	3	0.0
	4	3.3
	5	3.3
I303	1	5.0
	2	2.1
	3	2.1
	4	1.9
	5	2.1
	6	5.0
	7	1.8
	8	1.6
	9	1.6
	10	0.7
	11	0.0
	12	0.0
	13	2.9
	14	0.6
	15	0.0
	16	1.6
	17	1.6
	18	1.6
	19	1.6
	20	5.0
	21	0.0
	22	1.6
	23	1.6
	24	1.6
	25	1.6
	26	1.6
	27	2.5
	28	1.1
	29	1.1
	30	0.0
	21	1.3
	32	3.0
	33	1.9
	34	2.1
	35	0.0
	36	2.5
	37	1.9
	38	2.1
	39	2.1
	40	0.0

Circuit No.	Pin No.	Voltage DC
I501	1	4.0
	2	4.0
	3	4.0
	4	2.2
	5	0.0
	6	1.8
	7	6.0
	8	3.0
	9	0.0
	10	7.3
	11	0.0
	12	5.7
	13	4.8
	14	0.0
	15	1.0
	16	0.0
	17	0.6
	18	8.9
	19	8.9
	20	4.5
	21	4.3
	22	4.3
	23	0.0
	24	0.0
	25	5.8
	26	0.0
	27	0.0
	28	0.0
	29	0.0
	30	0.0
	31	5.5
	32	0.0
	33	0.0
	34	4.6
	35	0.0
	36	0.0
	37	2.2
	38	2.8
	39	0.0
	40	0.0
	41	5.0
	42	5.0
	43	0.0
	44	3.1
	45	0.0
	46	3.8
	47	2.3
	48	2.5

DC Voltages

Signal (2/4)

Circuit No.	Pin No.	Voltage DC
I502	1	2.5
	2	0.0
	3	1.8
	4	0.0
	5	1.8
	6	1.8
	7	0.0
	8	2.4
	9	2.8
	10	0.0
	11	2.5
	12	0.0
	13	5.0
	14	2.5
	15	0.0
	16	2.5
I503	1	0.0
	2	0.2
	3	5.0
	4	4.7
	5	0.0
	6	0.0
	7	0.0
	8	0.0
	9	0.0
	10	4.9
	11	4.9
	12	5.0
	13	0.3
	14	0.0
	15	4.7
	16	5.0
Q301	E	2.0
	B	2.3
	C	3.1
Q302	E	3.3
	B	3.1
	C	0.0
Q303	E	0.0
	B	0.0
	C	2.8
Q304	E	0.4
	B	0.0
	C	0.0

Circuit No.	Pin Name	Voltage DC
Q305	E	0.0
	B	0.0
	C	1.7
Q306	E	0.0
	B	0.0
	C	0.0
Q307	E	3.0
	B	3.6
	C	8.9
Q308	E	2.5
	B	1.9
	C	0.0
Q309	E	0.0
	B	0.4
	C	0.0
Q310	E	0.0
	B	0.4
	C	1.6
Q311	E	1.7
	B	1.6
	C	1.2
Q312	E	1.1
	B	1.2
	C	1.7
Q313	E	0.0
	B	0.0
	C	0.0
Q314	E	1.2
	B	1.8
	C	8.3
Q315	E	8.9
	B	8.3
	C	5.2
Q316	E	4.6
	B	0.0
	C	8.9
Q317	E	2.7
	B	2.1
	C	0.0

Circuit No.	Pin Name	Voltage DC
Q501	E	0.0
	B	0.8
	C	0.0
Q504	E	0.0
	B	0
	C	4.9
Q505	E	1.6
	B	2.2
	C	0.0
Q551	E	4.9
	B	4.3
	C	0.0
Q552	E	4.9
	B	4.3
	C	0.0
Q553	E	5.1
	B	4.5
	C	0
Q554	E	4.8
	B	0
	C	8.9
Q555	E	3.3
	B	0.0
	C	8.9
Q556	E	0
	B	0
	C	8.9
Q557	E	3.2
	B	3.8
	C	0.0
Q558	E	1.2
	B	1.8
	C	8.9

Circuit No.	Pin Name	Voltage DC
Q559	E	0.0
	B	0.7
	C	0.0
Q560	E	5.2
	B	5.0
	C	8.9
Q561	E	4.1
	B	3.5
	C	0.0
Q562	E	5.2
	B	5.0
	C	8.9
Q563	E	4.2
	B	3.6
	C	0.0
Q564	E	2.3
	B	1.7
	C	0.0

DC Voltages

Signal (3/4)

Circuit No.	Pin No.	Voltage DC
IC01	1	1.6
	2	5.5
	3	5.3
	4	5.2
	5	5.1
	6	0.0
	7	0.2
	8	5.2
	9	5.2
	10	5.2
	11	7.1
	12	3.3
	13	4.8
	14	2.1
	15	3.3
	16	3.3
	17	1.6
	18	1.6
	19	9.2
	20	6.7
	21	5.5
	22	2.9
	23	2.6
	24	1.2
	25	0.0
	26	1.4
	27	5.1
	28	0.2
	29	2.2
	30	4.6
	31	4.6
	32	0.0
	33	4.1
	34	4.1
	35	4.1
	36	0.6
	37	4.1
	38	4.1
	39	4.1
	40	9.2
	41	2.7
	42	2.7
	43	2.7
	44	0.0
	45	9.2
	46	4.9
	47	4.9
	48	4.7
	49	0.0
	50	0.0

Circuit No.	Pin No.	Voltage DC
IC01	51	0.0
	52	0.0
	53	5.8
	54	4.2
	55	9.2
	56	5.6
IC02	1	7.2
	2	0.0
	3	5.0
IC03	1	4.2
	2	0.0
	3	3.4
IC04	1	5.0
	2	0.0
	3	2.5
QC01	E	0.0
	B	0.6
	C	1.7
QC02	E	0.5
	B	0.6
	C	1.7
QC03	E	0.5
	B	0.6
	C	0.0
QC04	E	3.5
	B	4.1
	C	9.2
QC05	E	3.4
	B	4.0
	C	9.2
QC06	E	3.5
	B	4.1
	C	0.0
QC07	E	1.1
	B	1.2
	C	1.8
QC08	E	0.0
	B	1.2
	C	0.0
QC09	E	1.1
	B	1.1
	C	1.8

Circuit No.	Pin Name	Voltage DC
QC10	E	0.4
	B	0.0
	C	9.2
QC11	E	9.2
	B	9.2
	C	1.0
QC12	E	0.0
	B	0.0
	C	1.8
QC13	E	1.6
	B	0.0
	C	0.0
QC14	E	1.2
	B	0.0
	C	9.2
QC15	E	1.2
	B	0.6
	C	9.2
QC16	E	0.0
	B	0.0
	C	9.2
QC17	E	0.0
	B	0.0
	C	9.2
QC18	E	6.9
	B	7.5
	C	9.2
QC19	E	0.7
	B	0.0
	C	0.0
QC20	E	0.7
	B	0.0
	C	0.0
QC21	E	0.7
	B	0.0
	C	0.0
QC22	E	0.7
	B	0.0
	C	0.0
QC23	E	0.7
	B	0.0
	C	0.0

Circuit No.	Pin Name	Voltage DC
QC24	E	0.7
	B	0.0
	C	0.0
QC26	E	3.5
	B	4.2
	C	9.3
QC30	E	3.3
	B	2.6
	C	0.0
QC31	E	8.0
	B	0.0
	C	3.3
QC35	E	3.3
	B	2.6
	C	0.0
QC36	E	8.0
	B	0.0
	C	0.0
QC40	E	3.4
	B	2.7
	C	0.0
QC41	E	0.0
	B	7.3
	C	3.4
QC42	E	0.0
	B	0.4
	C	0.0

DC Voltages

Signal (4/4)

Circuit No.	Pin Name	Voltage DC
IJ01	1	1.6
	2	0.0
	3	0.0
	4	0.0
	5	1.6
	6	10.8
	7	14.8
	8	5.1
	9	31.7
	10	0.0
	11	4.3
	12	14.4

Circuit No.	Pin Name	Voltage DC
QJ01	E	0.0
	B	0.0
	C	0.0
QJ02	E	0.0
	B	0.0
	C	0.0
QJ03	E	0.0
	B	0.0
	C	4.2
QJ04	E	0.0
	B	0.0
	C	10.8

Circuit No.	Pin No.	Voltage DC
QH01	E	0.4
	B	3.8
	C	90.0
QH02	E	0.0
	B	0.5
	C	3.8
QH03	E	0.0
	B	0.5
	C	59.1

Deflection

Circuit No.	Pin No.	Voltage DC
I601	1	14.3
	2	26.6
	3	4.9
	4	6.7
	5	4.5
	6	0.0
	7	5.3
	8	6.1
	9	4.5
	10	27.0
	11	1.0
IH01	1	5.2
	2	11.6
	3	0.8
	4	2.5
	5	1.7
	6	0.0
	7	0.9
	8	0.0
	9	7.1
	10	7.1
	11	7.1
	12	7.1
	13	2.5
	14	1.9
	15	5.0
	16	0.0

Circuit No.	Pin No.	Voltage DC
QN01	E	0.0
	B	0.0
	C	0.5
QN02	E	11.4
	B	11.4
	C	0.0
QN03	E	0.0
	B	0.0
	C	11.4
QN04	E	0.5
	B	0.9
	C	11.4
QN05	E	0.0
	B	0.0
	C	11.5
QN06	E	0.0
	B	0.4
	C	0.0

Circuit No.	Pin Name	Voltage DC
Q601	E	0.0
	B	0.3
	C	4.2
Q602	E	0.0
	B	0.0
	C	0.5
Q603	E	0.0
	B	0.0
	C	5.2
Q604	E	27.2
	B	27.0
	C	0.0
Q701	E	92.1
	B	93.1
	C	115.5
Q703	E	2.3
	B	3.0
	C	93.1
Q704	E	0.0
	B	0.5
	C	14.1
Q705	E	0.0
	B	0.7
	C	0.0
Q706	E	1.3
	B	0.8
	C	11.6
Q707	E	0.0
	B	0.7
	C	0.0
Q708	E	0.0
	B	0.0
	C	11.1
Q709	E	0.0
	B	0.4
	C	11.1
Q710	E	0.0
	B	0.3
	C	0.0
Q777	E	0.0
	B	0.0
	C	90.0

Power Deflection

Circuit No.	Pin Name	Voltage DC
IP01	1	2.0
	2	0.0
	3	161.3
	4	15.4
	5	0.0
IP02	1	12.0
	2	11.1
	3	3.0
	4	15.4
IP03	1	115.6
	2	11.0
	3	0.0
IP04	1	11.7
	2	9.1
	3	0.0
	4	1.9
IP05	1	7.4
	2	5.1
	3	0.0
	4	1.9
IP06	1	7.4
	2	6.3
	3	0.0
	4	2.1

Circuit No.	Pin Name	Voltage DC
QP02	E	116.0
	B	115.5
	C	1.3
QP03	E	9.1
	B	9.1
	C	0.0

DC Voltages

SRS/BBE

Circuit No.	Pin No.	Voltage DC
IA01	1	4.5
	2	4.5
	3	4.5
	4	4.5
	5	4.5
	6	4.5
	7	4.5
	8	4.5
	9	0.8
	10	4.5
	11	1.2
	12	1.2
	13	4.5
	14	4.5
	15	0.0
	16	8.9
	17	0.0
	18	4.8
	19	1.4
	20	1.4
	21	4.5
	22	4.5
	23	4.5
	24	4.5
	25	4.5
	26	4.5
	27	4.5
	28	4.5
	29	4.5
	30	4.5
IA02	1	0.0
	2	4.5
	3	4.5
	4	4.5
	5	4.5
	6	4.5
	7	4.5
	8	4.5
	9	4.5
	10	8.9
	11	0.0
	12	4.5
	13	0.0
	14	0.0
	15	4.5
	16	4.5
	17	4.5
	18	4.5
	19	0.0

Circuit No.	Pin No.	Voltage DC
IA02	20	4.5
	21	4.5
	22	4.5
	23	4.5
	24	4.5
IA07	1	4.9
	2	4.9
	3	4.9
	4	0.0
	5	4.8
	6	4.8
	7	4.8
	8	8.9

Circuit No.	Pin Name	Voltage DC
QA01	E	1.4
	B	2.1
	C	8.2
QA02	E	8.9
	B	8.2
	C	5.0
QA03	E	1.4
	B	2.1
	C	8.2
QA04	E	8.9
	B	8.2
	C	4.9
QA05	E	0.0
	B	0.0
	C	0.0

VM

Circuit No.	Pin Name	Voltage DC
QE01	E	2.6
	B	3.3
	C	12.5
QE02	E	12.5
	B	11.8
	C	27.4
QE03	E	12.5
	B	13.1
	C	22.1
QE04	E	21.4
	B	22.1
	C	27.4
QE05	E	1.6
	B	2.2
	C	15.3
E07	E	16.0
	B	15.4
	C	0.0
QE08	E	15.4
	B	16.0
	C	27.4
QE10	E	14.8
	B	14.4
	C	27.4
QE11	E	14.6
	B	14.0
	C	0.0
QE22	E	214.5
	B	214.0
	C	10.6
QE23	E	213.4
	B	213.0
	C	121.6
QE24	E	121.6
	B	134.1
	C	116.4
QE25	E	16.6
	B	17.1
	C	116.0
QE26	E	0.9
	B	1.5
	C	16.6
QE35	E	11.8
	B	12.3
	C	155.0
QE36	E	11.8
	B	12.5
	C	27.4

FOCUS

Circuit No.	Pin Name	Voltage DC
QF03	E	0.6
	B	1.2
	C	5.7
QF04	E	5.6
	B	5.7
	C	0.7
QF05	E	0.3
	B	0.7
	C	11.2
QF06	E	11.4
	B	11.6
	C	302.0
QF07	E	401.0
	B	301.0
	C	788.0
QF08	E	10.2
	B	10.7
	C	354.0

DC Voltages

Power supply

Circuit No.	Pin No.	Voltage DC
I901	1	163.9
	2	0.0
	3	0.0
	4	16.9
	5	2.4
I902	1	5.2
	2	4.3
	3	3.5
	4	17.5
I903	1	5.0
	2	4.3
	3	0.0
	4	16.8
I904	1	4.8
	2	5.5
	3	5.2
	4	2.4
I906	1	0.0
	2	1.9
	3	9.5
	4	9.1
	5	11.0

Convergence

Circuit No.	Pin No.	Voltage DC
IK01	1	11.6
	2	0.0
	3	5.1
IK02	1	4.0
	2	5.0
	3	0.0
IK04	1	0.0
	2	0.0
	3	-29.3
	4	-30.4
	5	31.0
	6	0.0
	7	0.0
	8	-26.9
	9	0.0
	10	27.2
	11	0.0
	12	-26.9
	13	0.0
	14	0.0
	15	0.0
	16	0.0
	17	-26.9
	18	0.0
IK05	1	0.0
	2	0.0
	3	-29.3
	4	-30.4
	5	31.0
	6	0.0
	7	0.0
	8	-26.9
	9	0.0
	10	27.2
	11	0.0
	12	-26.9
	13	0.0
	14	0.0
	15	0.0
	16	0.0
	17	-26.9
	18	0.0

Circuit No.	Pin No.	Voltage DC
QK01	E	-7.1
	B	-6.5
	C	-5.3
QK02	E	0.6
	B	0.0
	C	0.0
QK03	E	0.6
	B	0
	C	-5.8
QK06	E	0
	B	0
	C	5.1
QK07	E	0
	B	0
	C	5.1
QK08	E	0.0
	B	0.0
	C	5.1

Sensor

Circuit No.	Pin No.	Voltage DC
QL10	E	5.1
	B	4.7
	C	0
QL11	E	5.2
	B	4.7
	C	1.6
QL16	E	5.1
	B	4.7
	C	0.0
QL17	E	0.5
	B	4.7
	C	0.0

DC Voltages

Terminal

Circuit No.	Pin No.	Voltage DC
IX01	1	3.9
	2	4.4
	3	4.0
	4	4.4
	5	4.4
	6	8.3
	7	0.0
	8	3.9
	9	4.4
	10	3.9
	11	4.4
	12	4.4
	13	0.0
	14	4.8
	15	3.9
	16	4.4
	17	3.9
	18	4.4
	19	4.4
	20	0.0
	21	4.8
	22	4.4
	23	4.4
	24	3.9
	25	4.4
	26	4.4
	27	0.0
	28	4.8
	29	4.4
	30	4.4
	31	4.4
	32	0.0
	33	4.7
	34	4.7
	35	0.0
	36	0.0
	37	4.4
	38	4.4
	39	3.5
	40	4.4
	41	4.2
	42	8.8
	43	4.4
	44	4.2
	45	4.4
	46	3.5
	47	4.4
	48	0.0

Circuit No.	Pin No.	Voltage DC
IX01	49	4.7
	50	4.4
	51	4.4
	52	4.4
	53	4.2
	54	4.4
	55	3.6
	56	4.0
	57	0.0
	58	4.3
	59	4.4
	60	3.9
	61	4.4
	62	4.4
	63	4.2
	64	4.4
IX02	1	6.3
	2	0.0
	3	3.8
	4	4.9
	5	8.7
IX03	1	4.0
	2	4.0
	3	4.0
	4	2.2
	5	0.0
	6	1.8
	7	5.9
	8	2.9
	9	0.0
	10	7.2
	11	0.0
	12	5.6
	13	4.7
	14	0.0
	15	1.0
	16	0.0
	17	0.6
	18	8.7
	19	8.7
	20	4.4
	21	4.4
	22	4.2
	23	8.7
	24	0.0
	25	5.7
	26	5.7
	27	5.5

Circuit No.	Pin No.	Voltage DC
IX03	28	0.0
	29	5.5
	30	5.5
	31	5.5
	32	0.6
	33	4.4
	34	4.5
	35	0.0
	36	0.0
	37	2.2
	38	0.0
	39	0.0
	40	2.7
	41	4.9
	42	4.9
	43	0.0
	44	3.1
	45	0.0
	46	3.7
	47	2.3
	48	2.2
IX04	1	2.8
	2	2.8
	3	2.8
	4	1.0
	5	1.0
	6	0.0
	7	2.8
	8	2.8
	9	2.8
	10	1.1
	11	1.1
	12	4.9
	13	3.4
	14	3.4
	15	3.2
	16	3.0
	17	0.0
	18	1.1
	19	0.0
	20	2.9
	21	0.0
	22	0.0
	23	0.0
	24	0.0
	25	2.5
	26	2.5
	27	2.3

Circuit No.	Pin No.	Voltage DC
IX04	28	4.9
	29	0.0
	30	4.6
	31	4.6
	32	0.0
	33	2.8
	34	2.8
	35	2.8
	36	1.1
	37	1.2
	38	2.2
	39	2.4
	40	4.9
	41	2.8
	42	2.8
	43	2.8
	44	1.1
	45	1.1
	46	0.0
	47	2.4
	48	0.0
IX05	1	2.8
	2	2.8
	3	2.8
	4	1.0
	5	1.0
	6	0.0
	7	2.8
	8	2.8
	9	2.8
	10	1.1
	11	1.1
	12	4.9
	13	3.4
	14	3.4
	15	3.2
	16	3.0
	17	0.0
	18	1.1
	19	0.0
	20	2.9
	21	0.0
	22	0.0
	23	0.0
	24	0.0
	25	2.5
	26	2.5
	27	2.3

DC Voltages

Circuit No.	Pin No.	Voltage DC
IX05	28	4.9
	29	0.0
	30	4.6
	31	4.6
	32	4.9
	33	2.8
	34	2.8
	35	2.8
	36	1.1
	37	1.2
	38	2.2
	39	2.4
	40	4.9
	41	2.8
	42	2.8
	43	2.8
	44	1.1
	45	1.1
	46	0.0
	47	2.4
	48	0.0
IX06	1	0.0
	2	0.0
	3	0.0
	4	0.0
	5	0.0
	6	0.0
	7	0.0
	8	0.0
	9	0.0
	10	0.0
	11	0.0
	12	0.0
	13	0.0
	14	0.0
	15	0.0
	16	5.0
IX07	1	0.0
	2	0.0
	3	0.0
	4	0.0
	5	0.0
	6	0.0
	7	0.0
	8	0.0
	9	0.0
	10	0.0
	11	0.0

Circuit No.	Pin No.	Voltage DC
IX07	12	0.0
	13	0.0
	14	0.0
	15	0.0
	16	5.0
IX08	1	0.0
	2	5.0
	3	4.7
	4	0.0
	5	4.8
	6	0.0
	7	0.0
	8	5.0
	9	0.0
	10	4.8
	11	0.0
	12	0.0
	13	0.0
	14	5.0
IX09	1	0.0
	2	5.0
	3	5.0
	4	5.0
	5	0.6
	6	0.0
	7	4.6
	8	0.0
	9	0.0
	10	0.0
	11	5.0
	12	4.4
	13	0.0
	14	0.0
	15	0.0
	16	5.0

Circuit No.	Pin No.	Voltage DC
QX01	E	3.5
	B	4.2
	C	8.8
QX02	E	2.9
	B	3.5
	C	8.8
QX03	E	3.7
	B	4.3
	C	8.8
QX04	E	3.6
	B	4.2
	C	8.8
QX05	E	3.5
	B	4.2
	C	8.8
QX06	E	3.7
	B	4.4
	C	8.8
QX07	E	3.6
	B	4.2
	C	8.8
QX08	E	4.9
	B	4.3
	C	0.0
QX09	E	4.6
	B	4.0
	C	0.0
QX10	E	5.0
	B	5.6
	C	8.8
QX11	E	6.0
	B	6.6
	C	8.8
QX12	E	6.2
	B	6.8
	C	8.8

Circuit No.	Pin Name	Voltage DC
QX13	E	5.0
	B	4.4
	C	0.0
QX14	E	4.8
	B	4.3
	C	0.0
QX15	E	4.8
	B	4.2
	C	0.0
QX16	E	2.6
	B	3.2
	C	4.9
QX17	E	2.5
	B	3.2
	C	4.9
QX18	E	2.9
	B	2.3
	C	0.0
QX19	E	3.2
	B	2.6
	C	0.0
QX20	E	3.2
	B	2.5
	C	0.0
QX21	E	2.9
	B	2.3
	C	0.0
QX22	E	3.2
	B	2.6
	C	0.0
QX23	E	3.2
	B	2.5
	C	0.0
QX24	E	5.2
	B	4.6
	C	0.0
QX36	E	0.5
	B	1.1
	C	9.2
QX37	E	0.0
	B	0.6
	C	5.5
QX40	E	0.0
	B	0.0
	C	0.0
QX41	E	0.0
	B	0.0
	C	0.0

DC Voltages

CPT

Circuit No.	Pin Name	Voltage DC
Q801	E	3.0
	B	3.5
	C	8.3
Q802	E	8.3
	B	8.6
	C	0.0
Q803	E	8.6
	B	9.1
	C	168.0
Q804	E	169.0
	B	168.4
	C	1.1
Q805	E	169.0
	B	170.0
	C	225.0
Q812	E	1.0
	B	1.7
	C	1.1
Q851	E	3.1
	B	3.5
	C	8.3
Q852	E	8.3
	B	8.6
	C	9.1

Circuit No.	Pin Name	Voltage DC
Q853	E	8.6
	B	9.1
	C	156.4
Q854	E	157.0
	B	156.0
	C	1.1
Q855	E	157.0
	B	157.0
	C	224.9
Q858	E	2.5
	B	1.8
	C	0.0
Q859	E	1.8
	B	2.5
	C	9.1
Q862	E	1.1
	B	1.8
	C	1.1
Q8A1	E	3.2
	B	3.8
	C	8.3
Q8A2	E	8.2
	B	8.6
	C	9.1
Q8A3	E	8.6
	B	9.1
	C	150.0
Q8A4	E	151.6
	B	150.8
	C	1.1
Q8A5	E	152.0
	B	152.0
	C	224.0
Q8A6	E	3.0
	B	3.0
	C	0.0
Q8A7	E	3.0
	B	3.7
	C	9.1
Q8C1	E	0.0
	B	0.0
	C	9.0
Q8C2	E	1.1
	B	0.0
	C	1.1

Power Supply

Circuit No.	Pin Name	Voltage DC
Q901	E	16.9
	B	16.9
	C	0.0
Q902	E	0.0
	B	0.0
	C	16.9
Q914	E	0.0
	B	0.9
	C	0.5
Q915	E	1.9
	B	1.9
	C	0.1
Q916	E	0.0
	B	0.1
	C	1.9
Q917	E	2.2
	B	2.5
	C	5.2
Q918	E	0.0
	B	0.0
	C	4.3
Q919	E	2.2
	B	2.2
	C	0.1
Q920	E	2.9
	B	3.5
	C	17.5

Control

Circuit No.	Pin Name	Voltage DC
QM01	E	0.0
	B	0.8
	C	0.0
QM03	E	1.8
	B	2.5
	C	9.0
QM04	E	1.9
	B	2.5
	C	8.9
QM05	E	0.0
	B	0.0
	C	5.2

DP1X Protection Circuit Block Diagram (Power Supply)

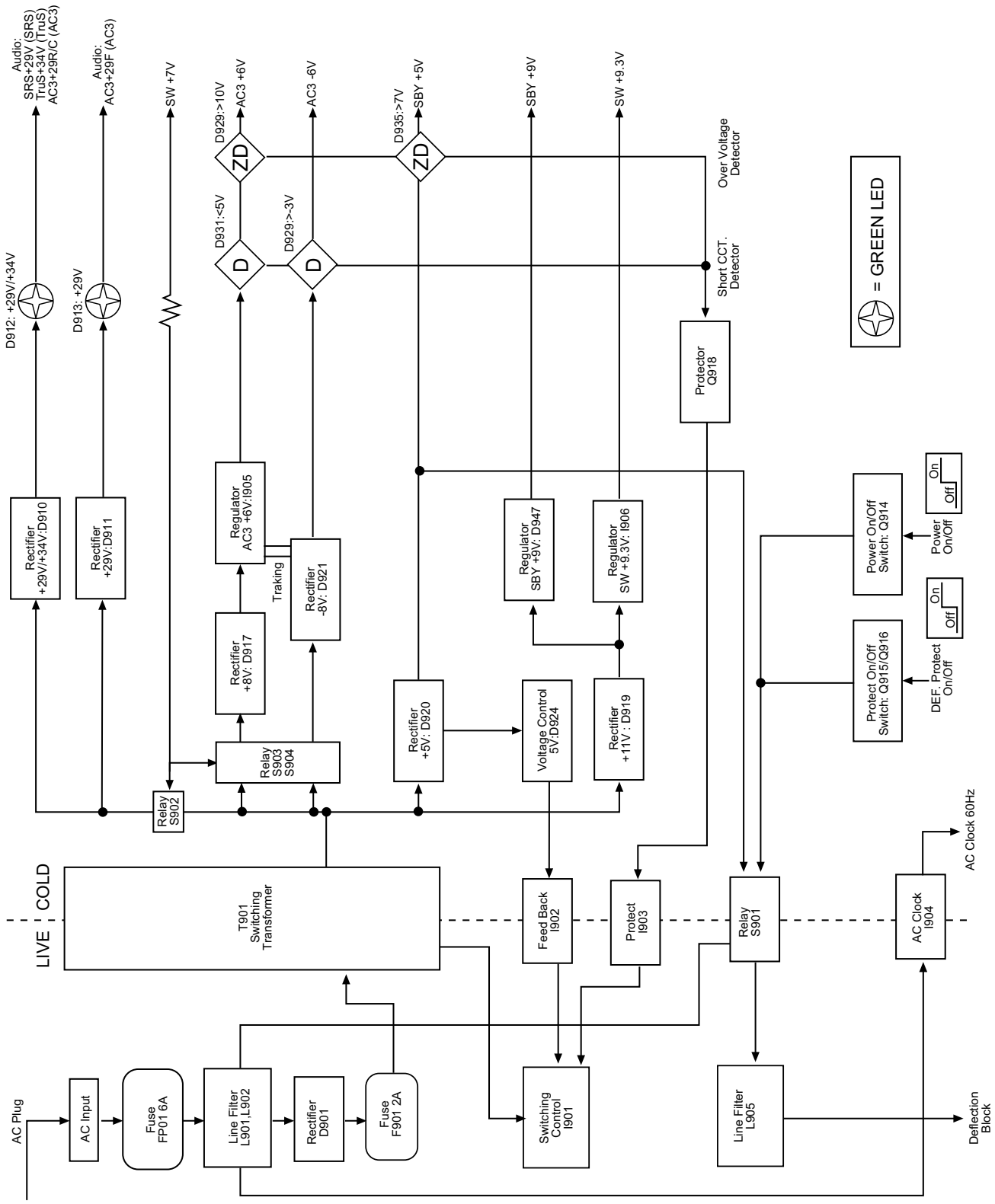

DP1X Protection Circuit Block Diagram (Deflection Supply)

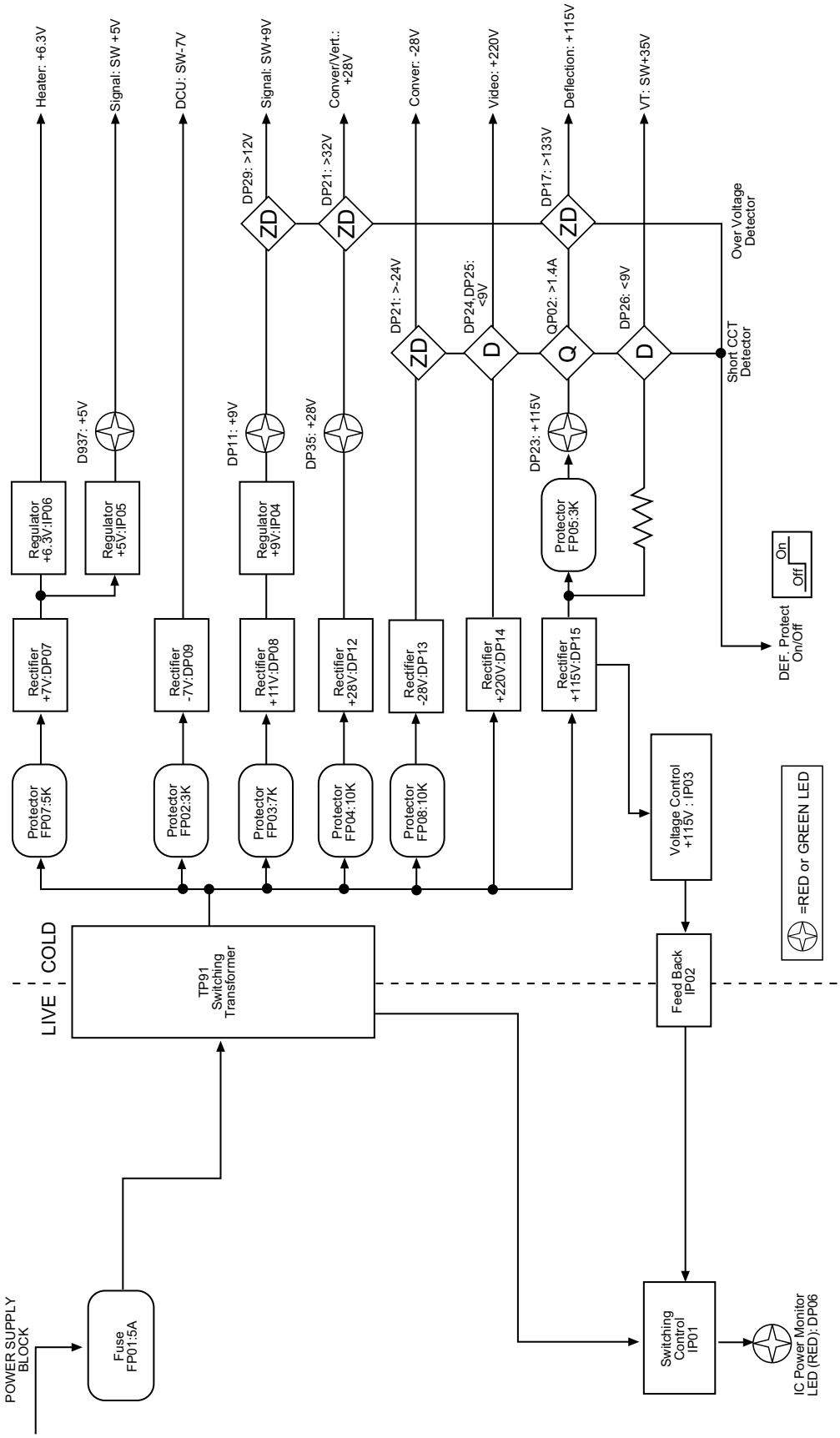

PRODUCT SAFETY NOTE: Components marked with a ⚠ and shaded have special characteristics important to safety. Before replacing any of these components, read carefully the PRODUCT SAFETY NOTICE of this Service Manual. Don't degrade the safety of the receiver through improper servicing.

BASIC CIRCUIT DIAGRAM

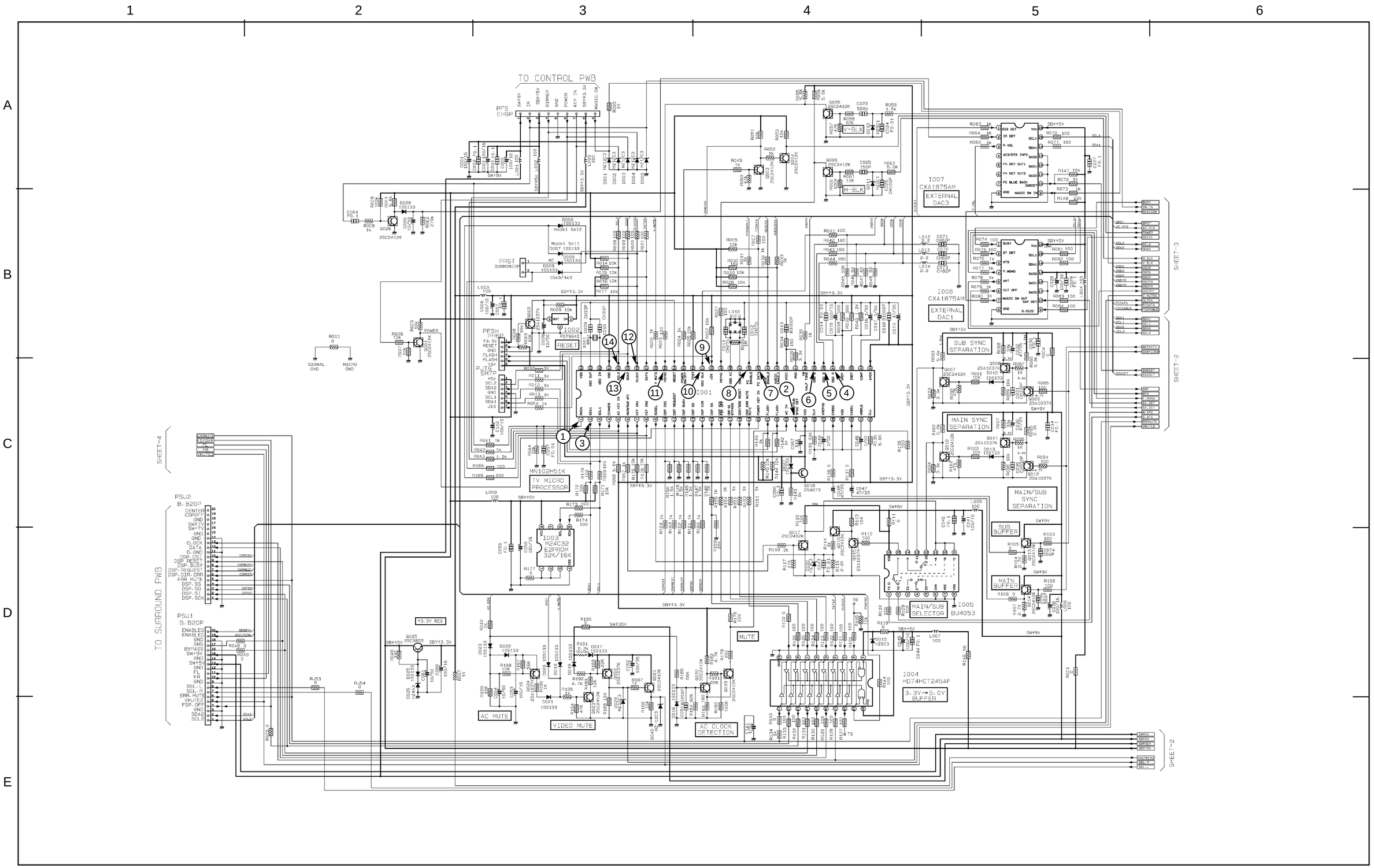

- All DC voltage to be measured with a tester (100kΩ/V). Voltage taken on a complex color bar signal including a standard color bar signal.
- Since this is a basic circuit diagram, the value of the parts is subject to be altered for improvement.

SIGNAL 1/4

PRODUCT SAFETY NOTE: Components marked with a ⚠ and shaded have special characteristics important to safety. Before replacing any of these components, read carefully the PRODUCT SAFETY NOTICE of this Service Manual. Don't degrade the safety of the receiver through improper servicing.

BASIC CIRCUIT DIAGRAM

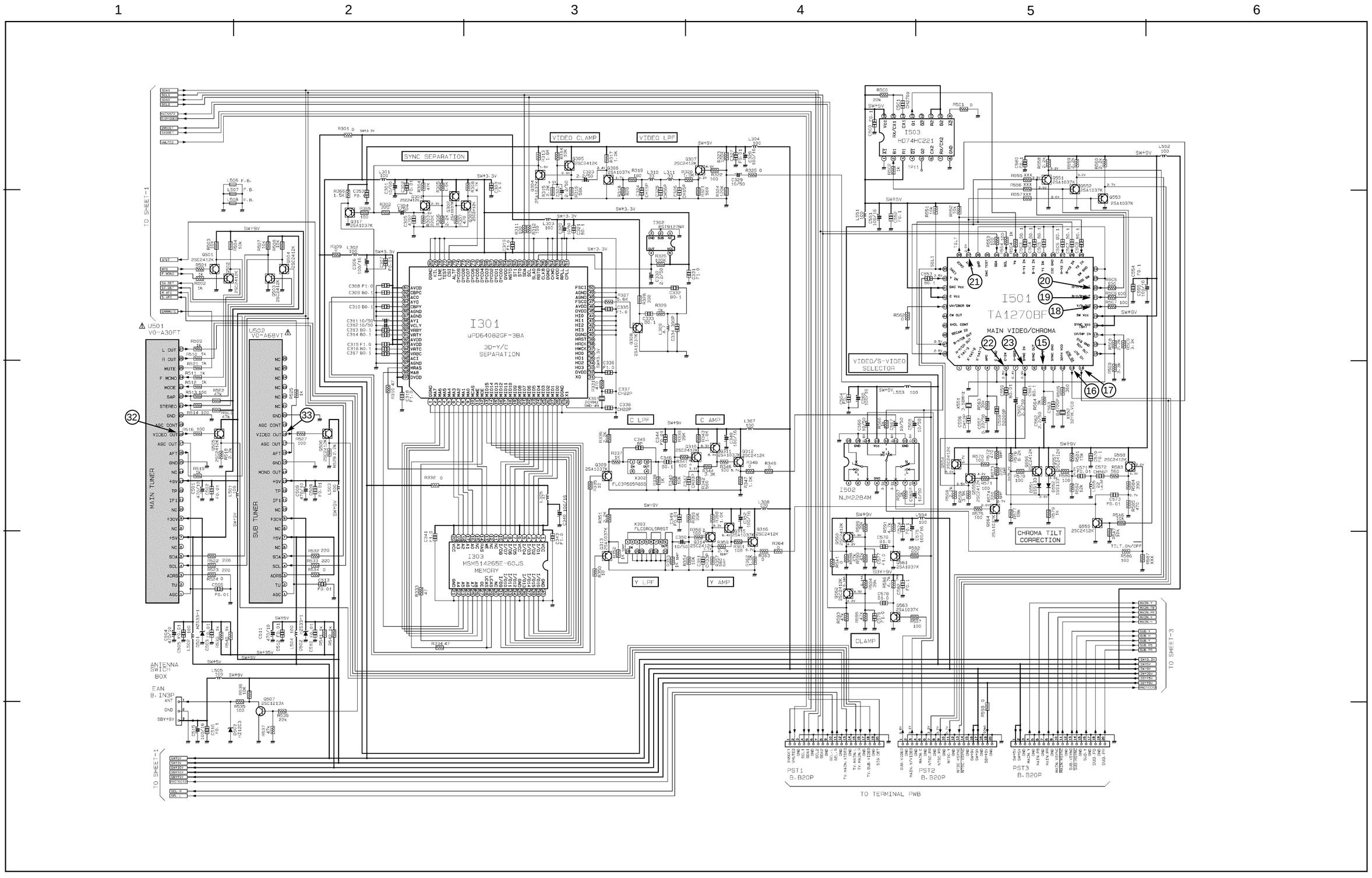

- All DC voltage to be measured with a tester (100kΩ/V). Voltage taken on a complex color bar signal including a standard color bar signal.
- Since this is a basic circuit diagram, the value of the parts is subject to be altered for improvement.

PRODUCT SAFETY NOTE: Components marked with a ⚠ and shaded have special characteristics important to safety. Before replacing any of these components, read carefully the PRODUCT SAFETY NOTICE of this Service Manual. Don't degrade the safety of the receiver through improper servicing.

BASIC CIRCUIT DIAGRAM

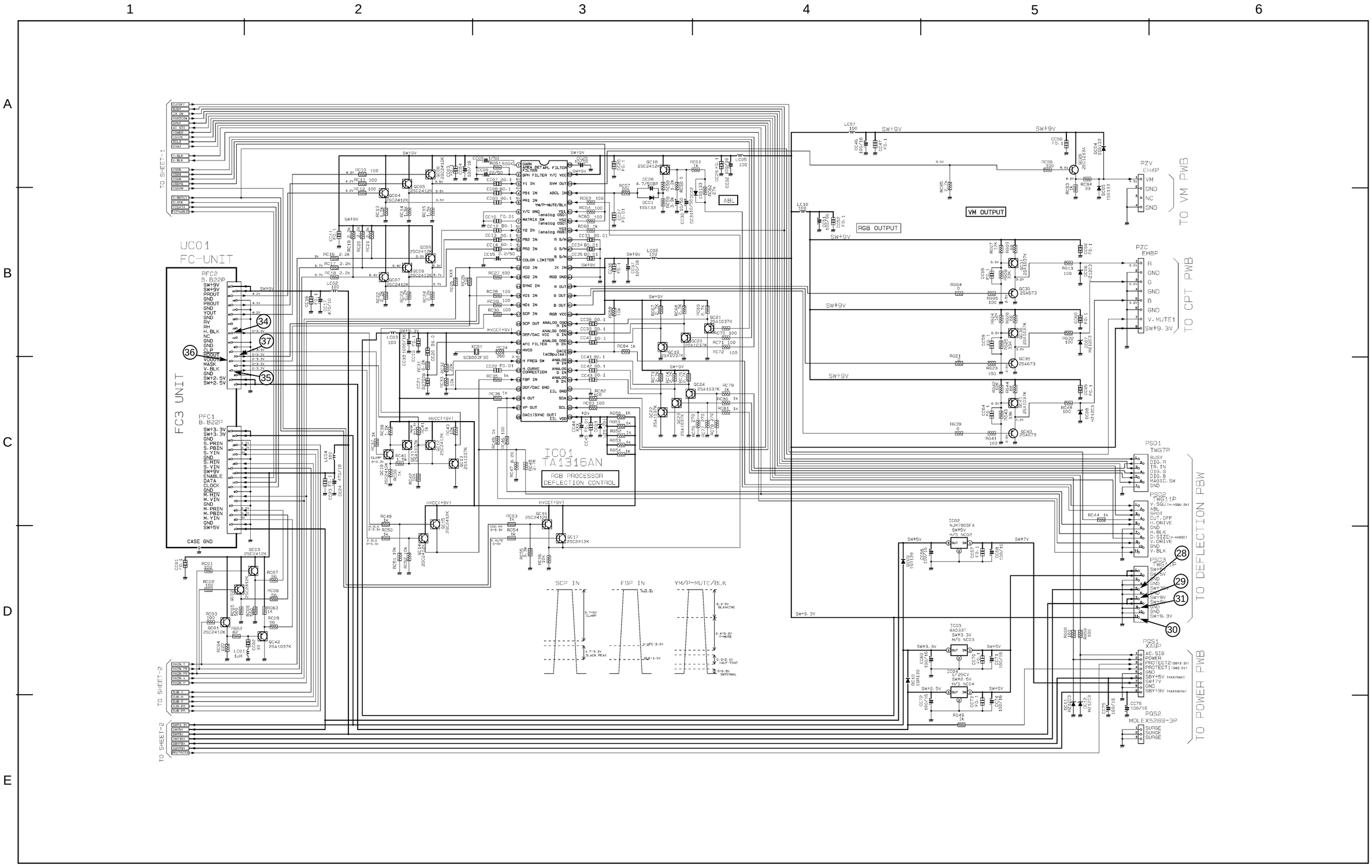

- All DC voltage to be measured with a tester (100kΩ/V). Voltage taken on a complex color bar signal including a standard color bar signal.
- Since this is a basic circuit diagram, the value of the parts is subject to be altered for improvement.

PRODUCT SAFETY NOTE: Components marked with a ⚠ and shaded have special characteristics important to safety. Before replacing any of these components, read carefully the PRODUCT SAFETY NOTICE of this Service Manual. Don't degrade the safety of the receiver through improper servicing.

BASIC CIRCUIT DIAGRAM

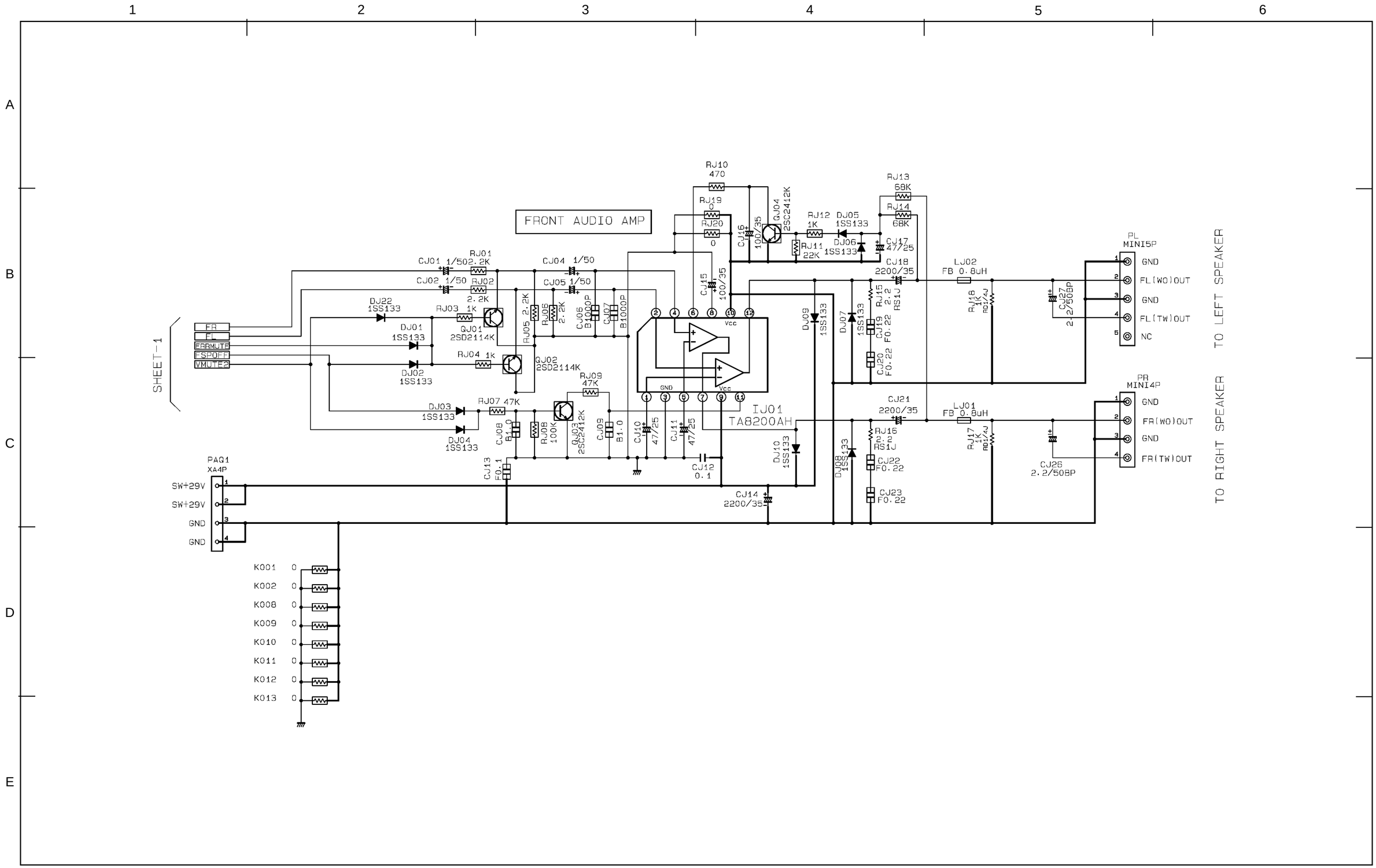

- All DC voltage to be measured with a tester (100kΩ/V). Voltage taken on a complex color bar signal including a standard color bar signal.
- Since this is a basic circuit diagram, the value of the parts is subject to be altered for improvement.

SIGNAL 4/4

PRODUCT SAFETY NOTE: Components marked with a ⚠ and shaded have special characteristics important to safety. Before replacing any of these components, read carefully the PRODUCT SAFETY NOTICE of this Service Manual. Don't degrade the safety of the receiver through improper servicing.

BASIC CIRCUIT DIAGRAM

TERMINAL
DP15/DP15E

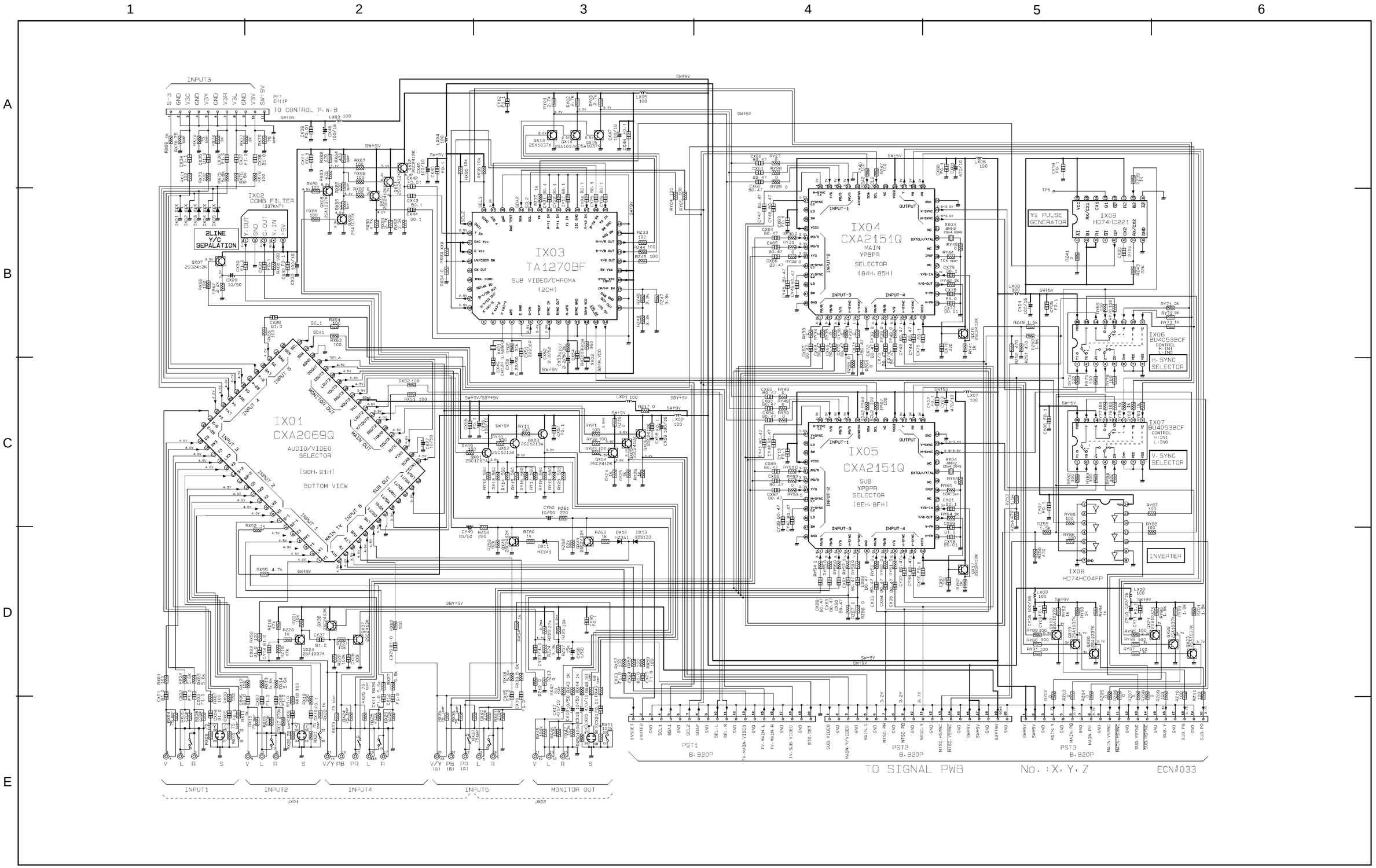

- All DC voltage to be measured with a tester (100kΩ/V). Voltage taken on a complex color bar signal including a standard color bar signal.
- Since this is a basic circuit diagram, the value of the parts is subject to be altered for improvement.

TERMINAL

PRODUCT SAFETY NOTE: Components marked with a ⚠ and shaded have special characteristics important to safety. Before replacing any of these components, read carefully the PRODUCT SAFETY NOTICE of this Service Manual. Don't degrade the safety of the receiver through improper servicing.

BASIC CIRCUIT DIAGRAM

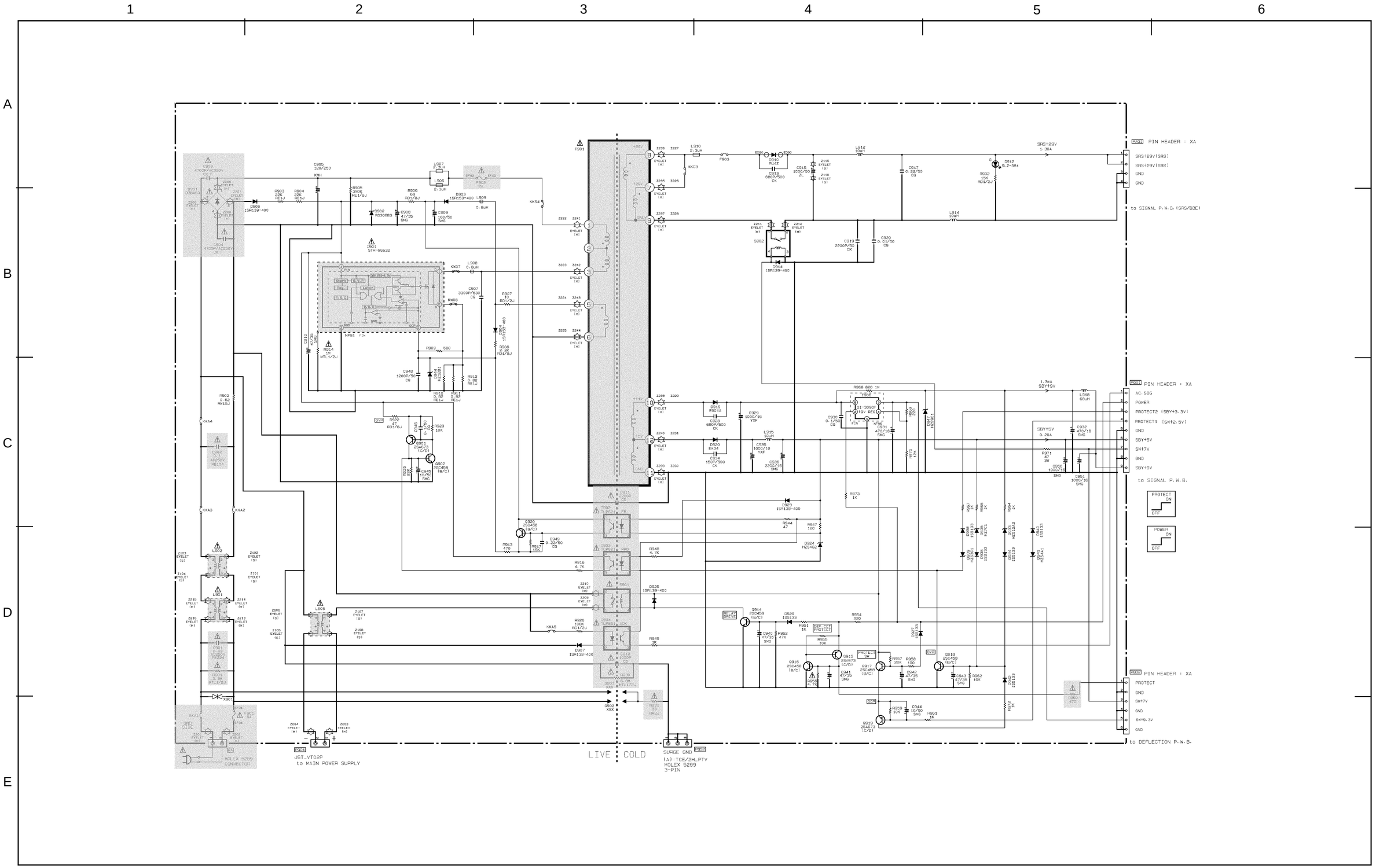

- All DC voltage to be measured with a tester (100kΩ/V). Voltage taken on a complex color bar signal including a standard color bar signal.
- Since this is a basic circuit diagram, the value of the parts is subject to be altered for improvement.

POWER SUPPLY

PRODUCT SAFETY NOTE: Components marked with a ⚠ and shaded have special characteristics important to safety. Before replacing any of these components, read carefully the PRODUCT SAFETY NOTICE of this Service Manual. Don't degrade the safety of the receiver through improper servicing.

BASIC CIRCUIT DIAGRAM

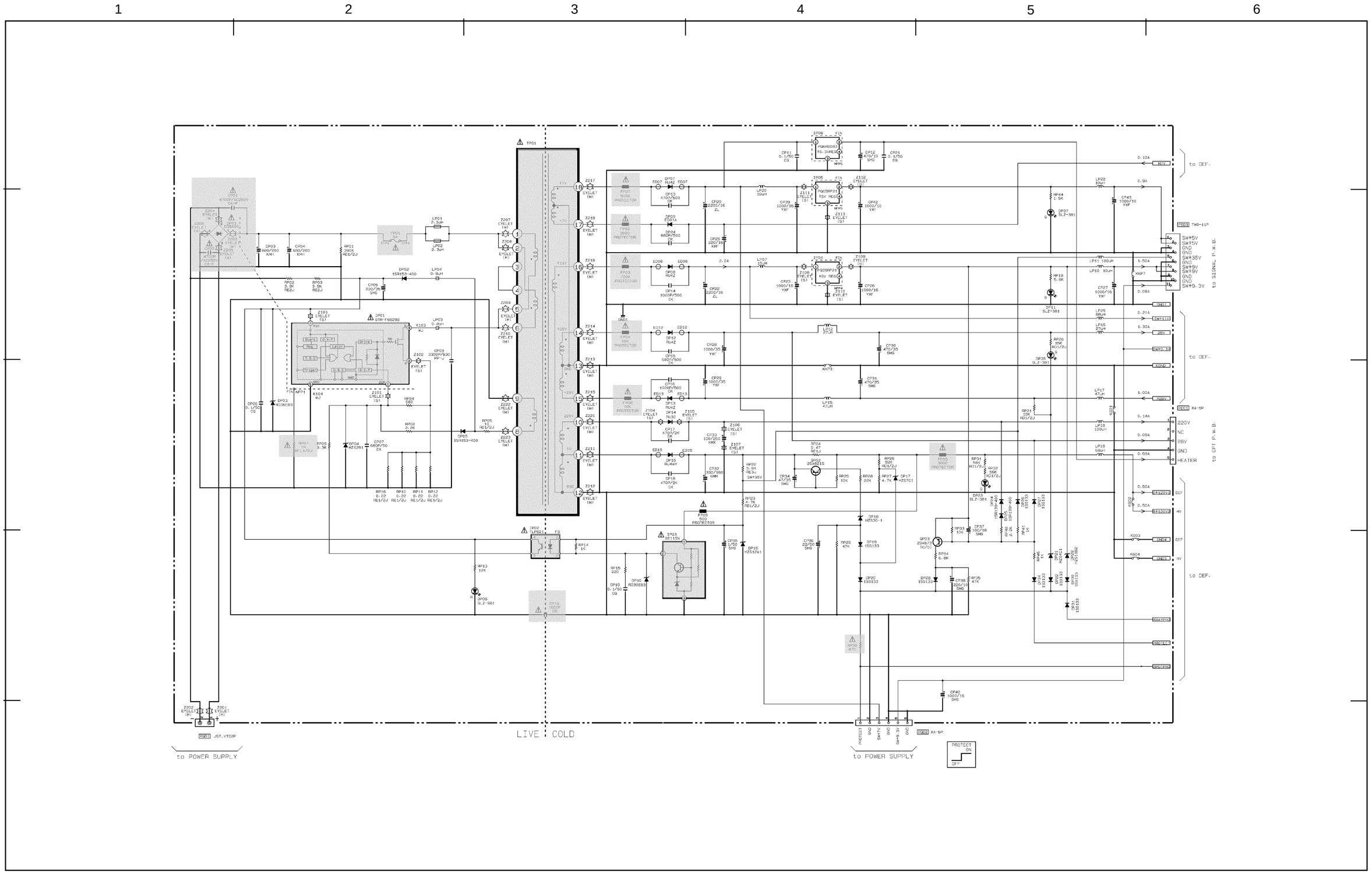

- All DC voltage to be measured with a tester (100kΩ/V). Voltage taken on a complex color bar signal including a standard color bar signal.
- Since this is a basic circuit diagram, the value of the parts is subject to be altered for improvement.

DEFLECTION POWER SUPPLY

PRODUCT SAFETY NOTE: Components marked with a ⚠ and shaded have special characteristics important to safety. Before replacing any of these components, read carefully the PRODUCT SAFETY NOTICE of this Service Manual. Don't degrade the safety of the receiver through improper servicing.

BASIC CIRCUIT DIAGRAM

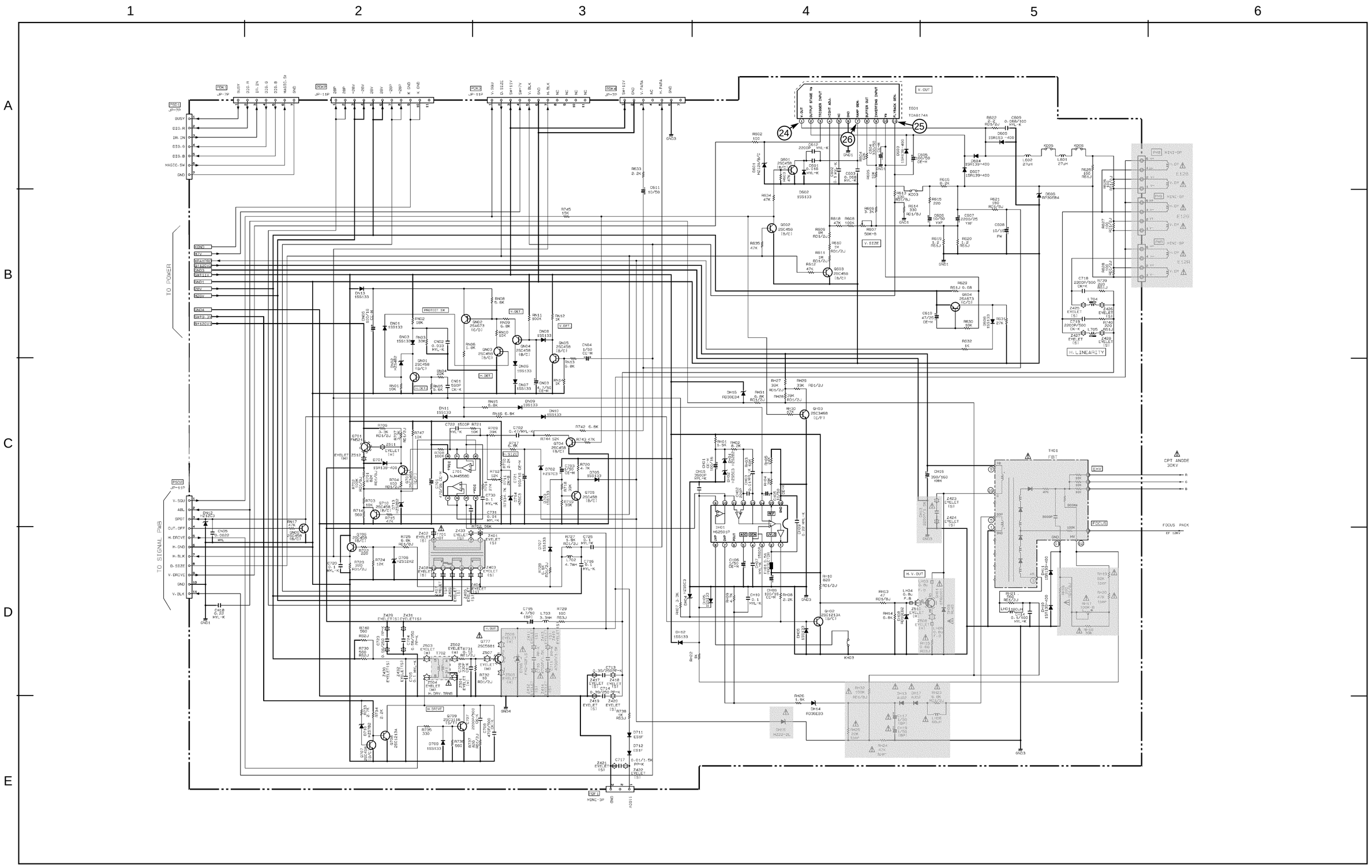

- All DC voltage to be measured with a tester (100kΩ/V). Voltage taken on a complex color bar signal including a standard color bar signal.
- Since this is a basic circuit diagram, the value of the parts is subject to be altered for improvement.

DEFLECTION 1/2

PRODUCT SAFETY NOTE: Components marked with a ⚠ and shaded have special characteristics important to safety. Before replacing any of these components, read carefully the PRODUCT SAFETY NOTICE of this Service Manual. Don't degrade the safety of the receiver through improper servicing.

BASIC CIRCUIT DIAGRAM

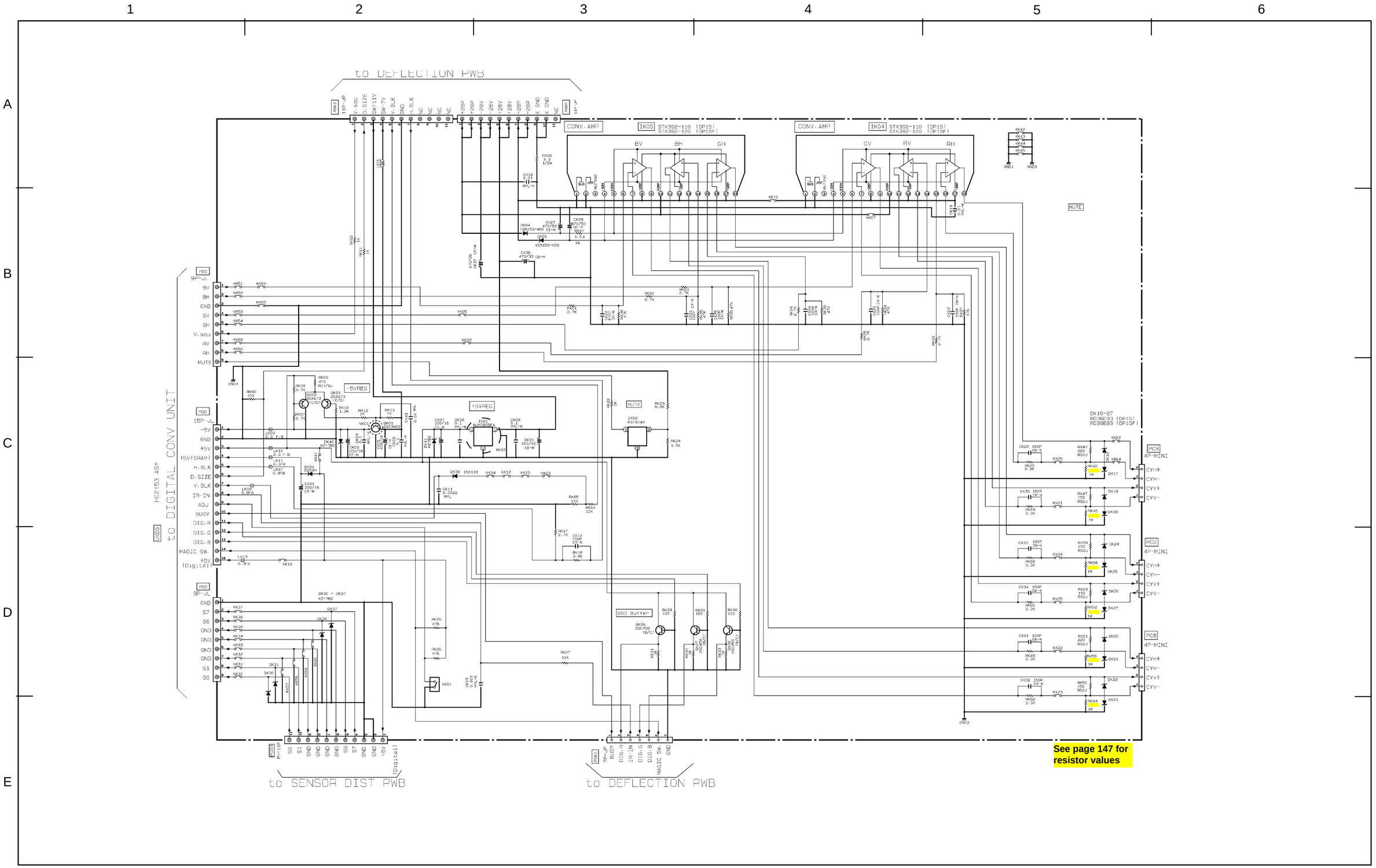

- All DC voltage to be measured with a tester (100kΩ/V). Voltage taken on a complex color bar signal including a standard color bar signal.
- Since this is a basic circuit diagram, the value of the parts is subject to be altered for improvement.

PRODUCT SAFETY NOTE: Components marked with a ⚠ and shaded have special characteristics important to safety. Before replacing any of these components, read carefully the PRODUCT SAFETY NOTICE of this Service Manual. Don't degrade the safety of the receiver through improper servicing.

BASIC CIRCUIT DIAGRAM

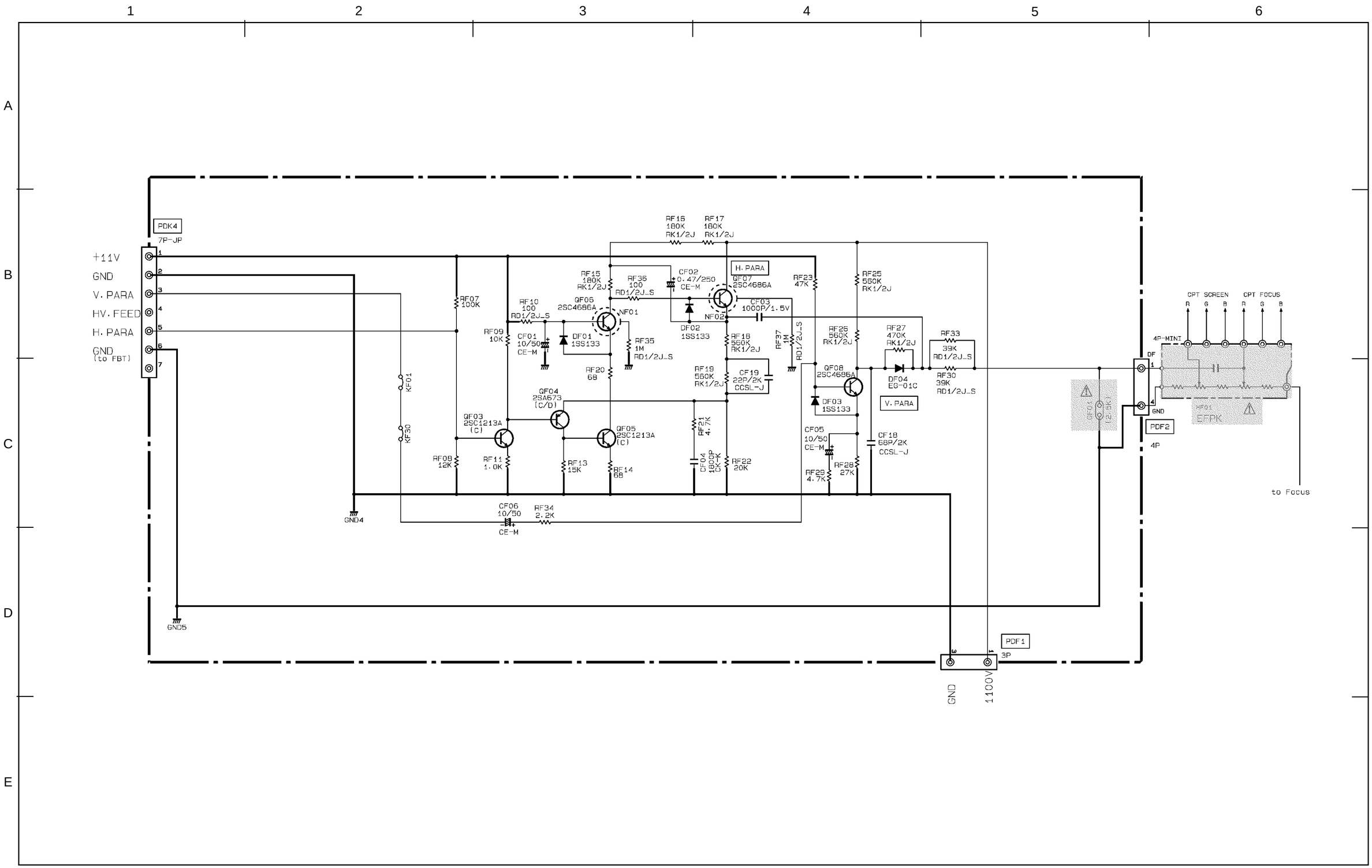

- All DC voltage to be measured with a tester (100kΩ/V). Voltage taken on a complex color bar signal including a standard color bar signal.
- Since this is a basic circuit diagram, the value of the parts is subject to be altered for improvement.

FOCUS

PRODUCT SAFETY NOTE: Components marked with a ⚠ and shaded have special characteristics important to safety. Before replacing any of these components, read carefully the PRODUCT SAFETY NOTICE of this Service Manual. Don't degrade the safety of the receiver through improper servicing.

BASIC CIRCUIT DIAGRAM

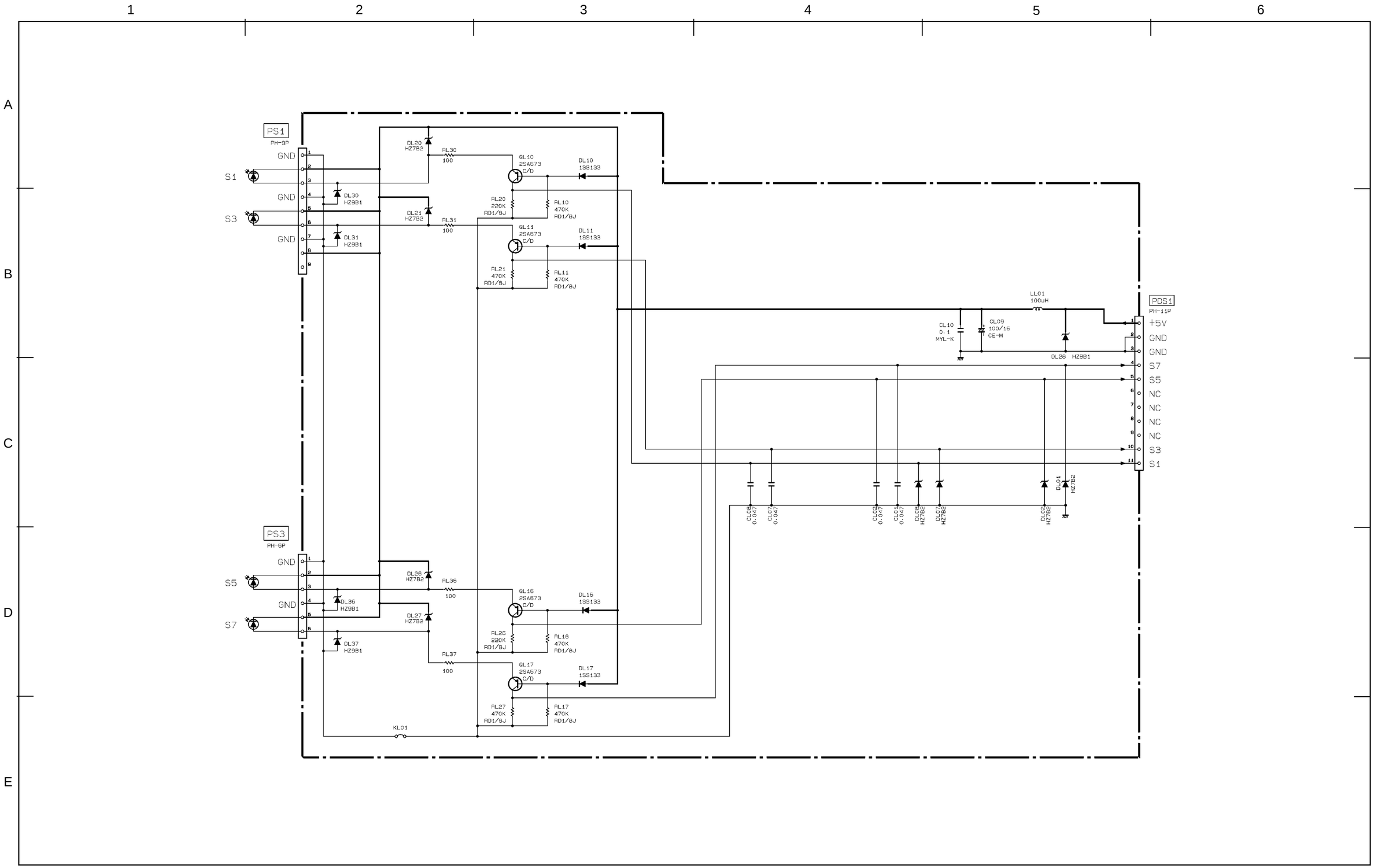

- All DC voltage to be measured with a tester (100kΩ/V). Voltage taken on a complex color bar signal including a standard color bar signal.
- Since this is a basic circuit diagram, the value of the parts is subject to be altered for improvement.

SENSOR

PRODUCT SAFETY NOTE: Components marked with a ⚠ and shaded have special characteristics important to safety. Before replacing any of these components, read carefully the PRODUCT SAFETY NOTICE of this Service Manual. Don't degrade the safety of the receiver through improper servicing.

BASIC CIRCUIT DIAGRAM

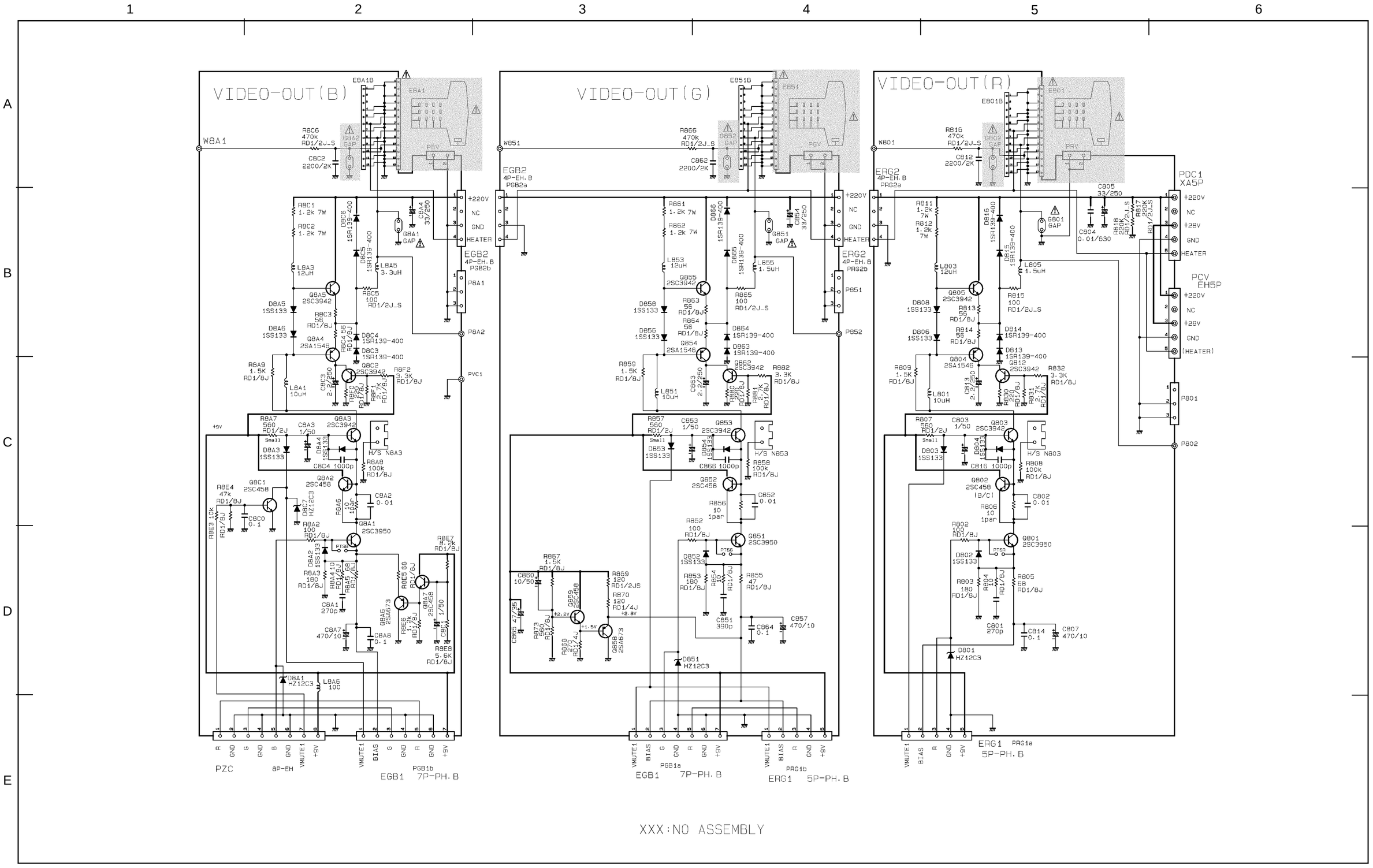

- All DC voltage to be measured with a tester (100kΩ/V). Voltage taken on a complex color bar signal including a standard color bar signal.
- Since this is a basic circuit diagram, the value of the parts is subject to be altered for improvement.

CPT

PRODUCT SAFETY NOTE: Components marked with a ⚠ and shaded have special characteristics important to safety. Before replacing any of these components, read carefully the PRODUCT SAFETY NOTICE of this Service Manual. Don't degrade the safety of the receiver through improper servicing.

BASIC CIRCUIT DIAGRAM

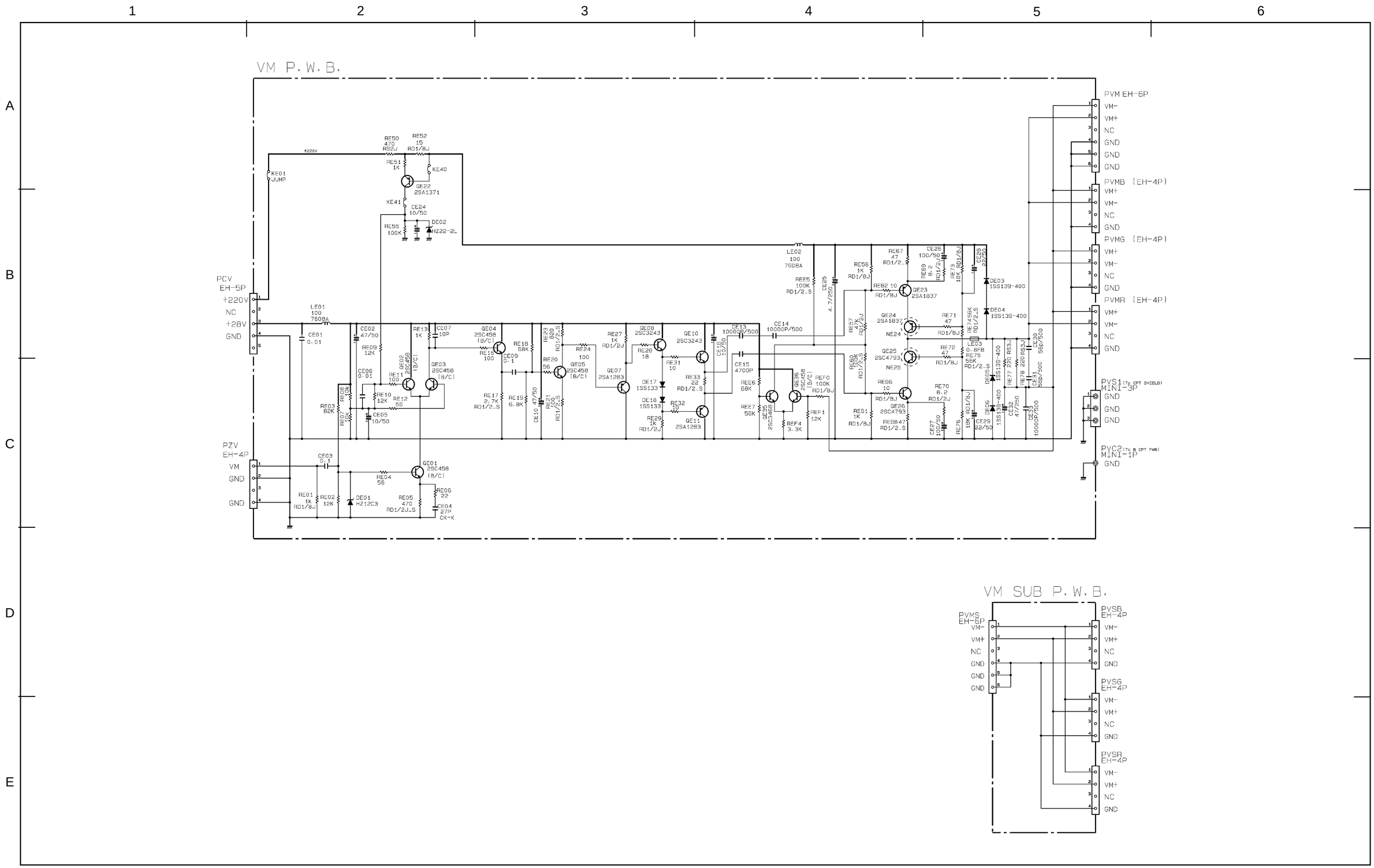

- All DC voltage to be measured with a tester (100kΩ/V). Voltage taken on a complex color bar signal including a standard color bar signal.
- Since this is a basic circuit diagram, the value of the parts is subject to be altered for improvement.

PRODUCT SAFETY NOTE: Components marked with a ⚠ and shaded have special characteristics important to safety. Before replacing any of these components, read carefully the PRODUCT SAFETY NOTICE of this Service Manual. Don't degrade the safety of the receiver through improper servicing.

BASIC CIRCUIT DIAGRAM

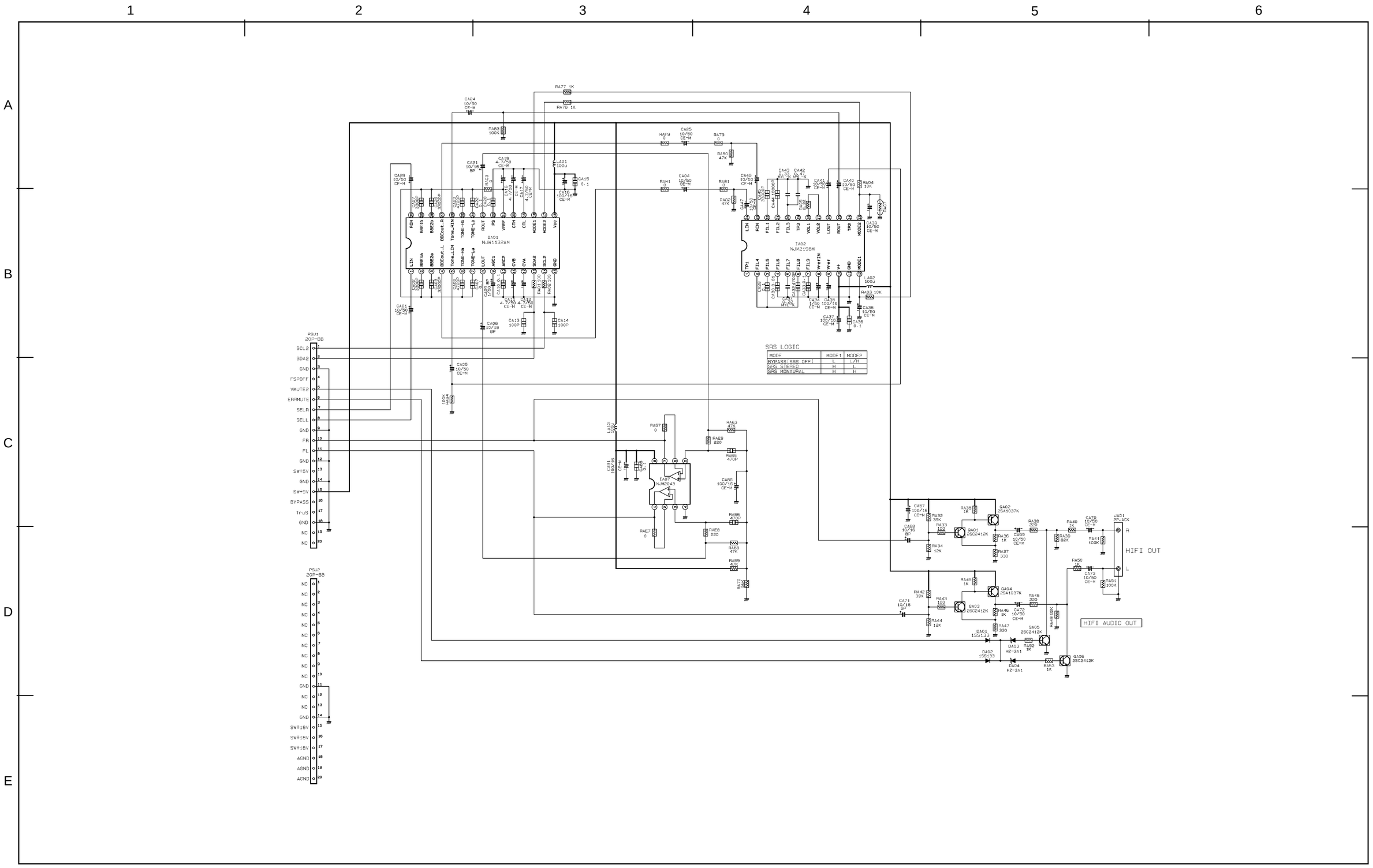

- All DC voltage to be measured with a tester (100kΩ/V). Voltage taken on a complex color bar signal including a standard color bar signal.
- Since this is a basic circuit diagram, the value of the parts is subject to be altered for improvement.

SRS

PRODUCT SAFETY NOTE: Components marked with a ⚠ and shaded have special characteristics important to safety. Before replacing any of these components, read carefully the PRODUCT SAFETY NOTICE of this Service Manual. Don't degrade the safety of the receiver through improper servicing.

BASIC CIRCUIT DIAGRAM

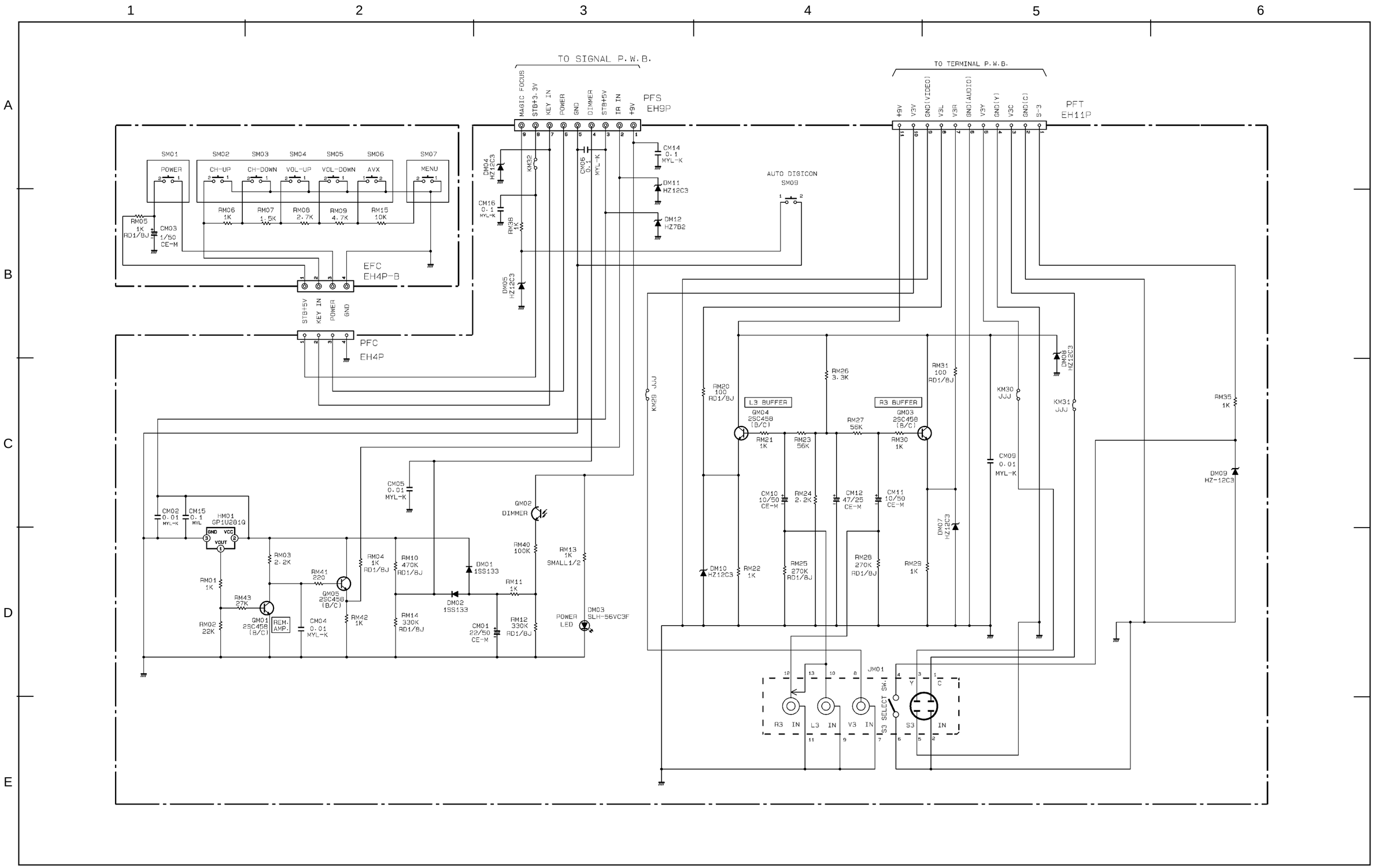

- All DC voltage to be measured with a tester (100kΩ/V). Voltage taken on a complex color bar signal including a standard color bar signal.
- Since this is a basic circuit diagram, the value of the parts is subject to be altered for improvement.

CONTROL

PRINTED CIRCUIT BOARD
COMPONENT SIDE

DP1X SIGNAL PWB

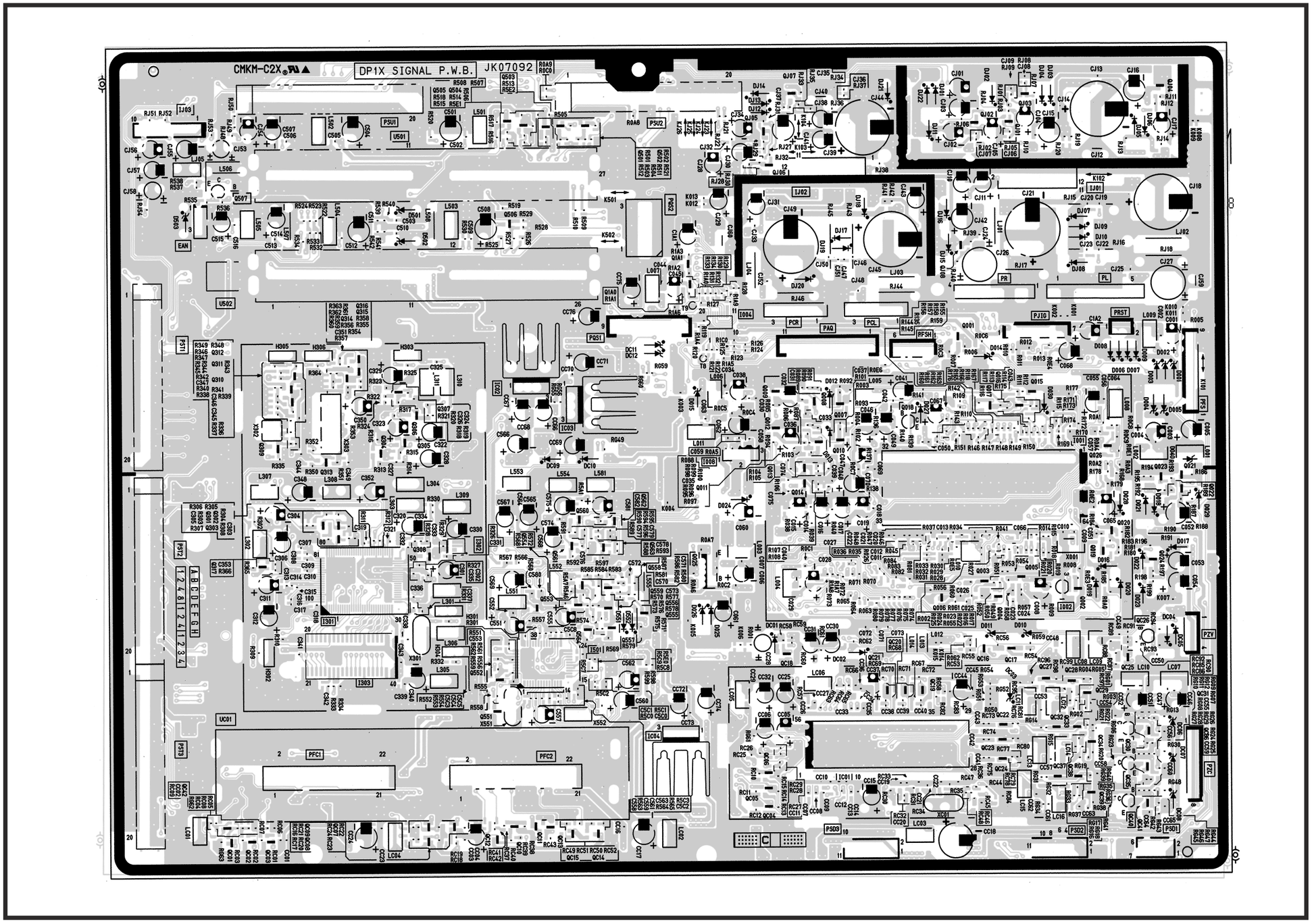

PRINTED CIRCUIT BOARD
PATTERN SIDE

DP1X SIGNAL PWB

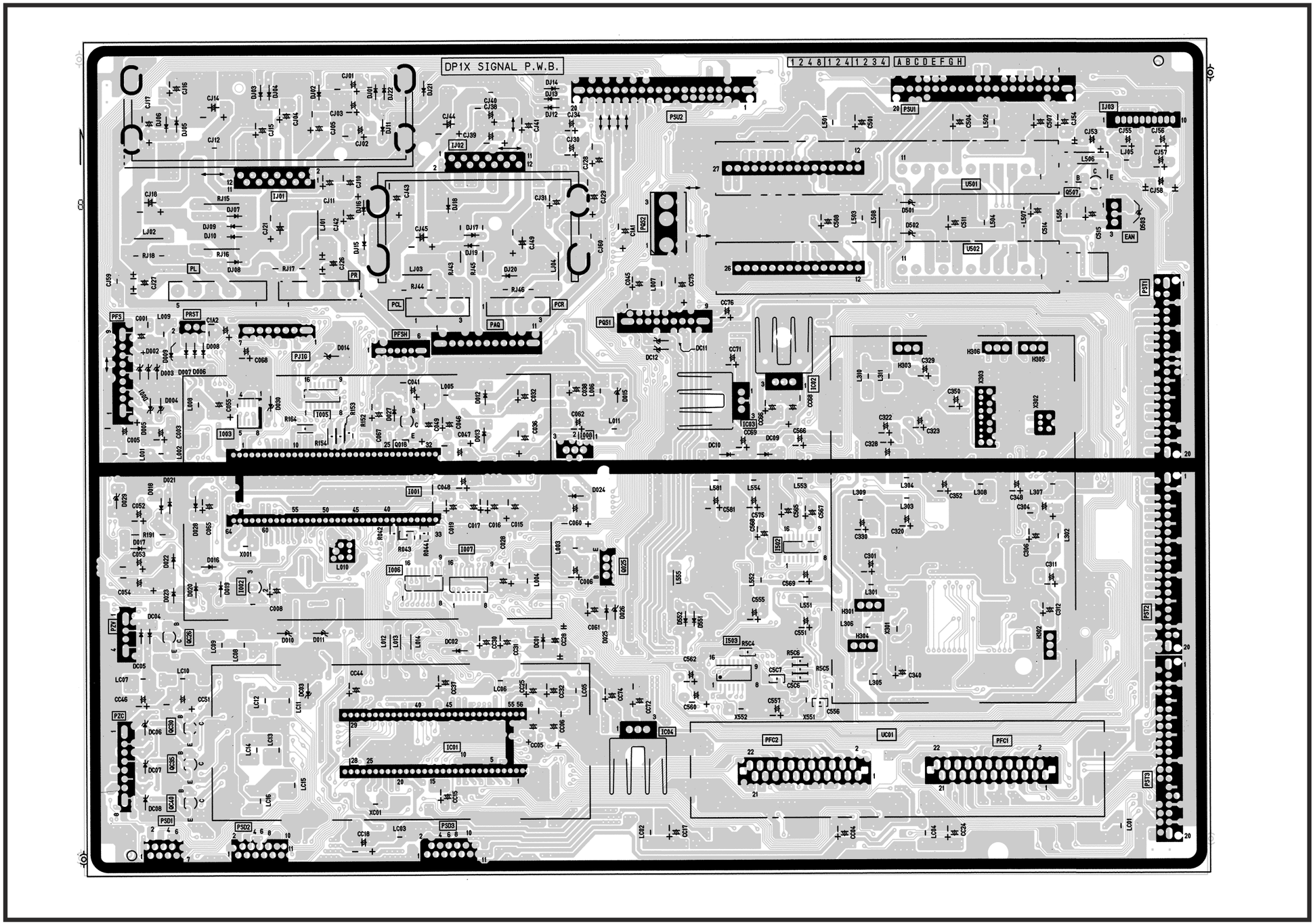

PRINTED CIRCUIT BOARD
COMPONENT SIDE

DP1X DEFLECTION PWB

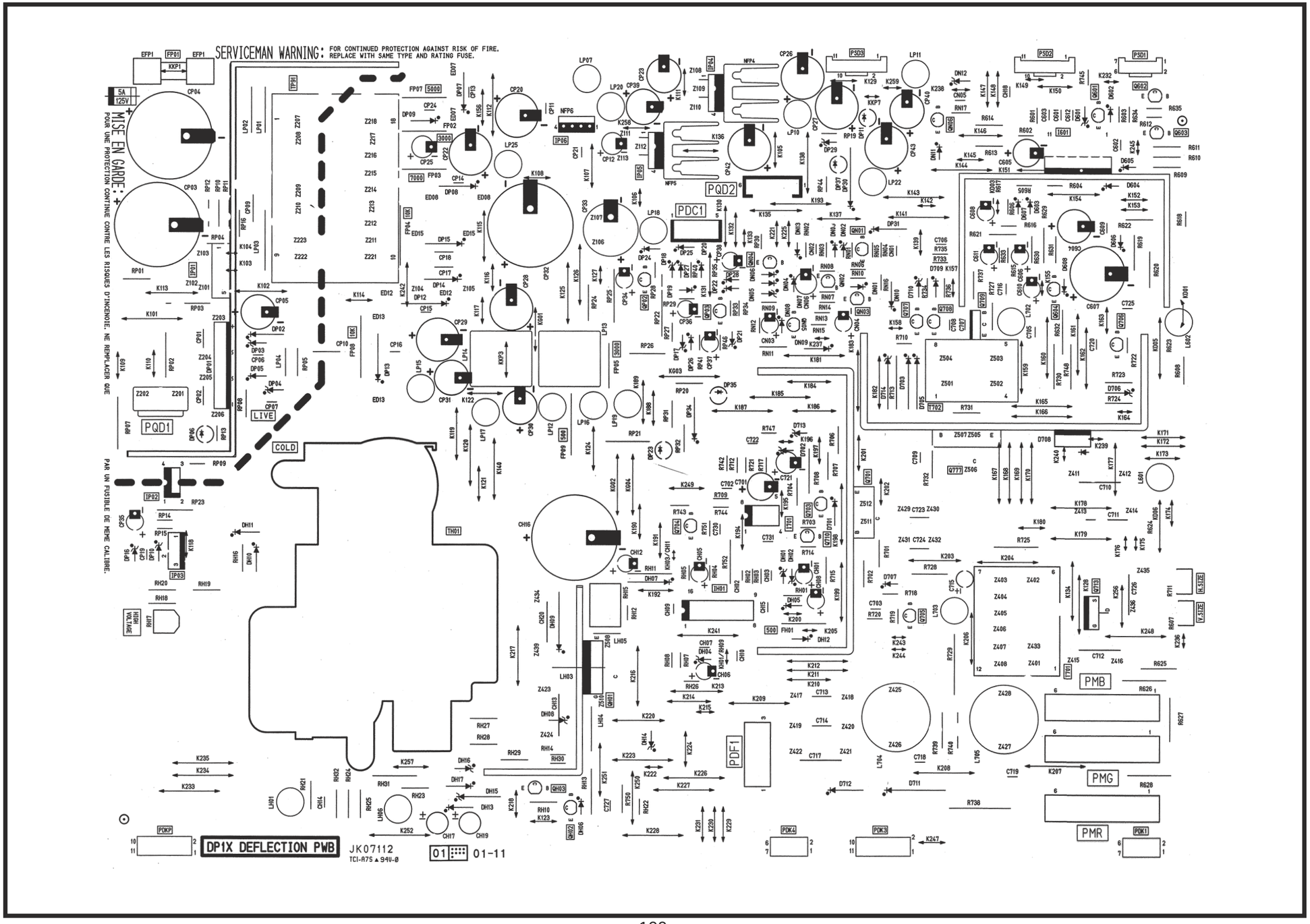

PRINTED CIRCUIT BOARD
PATTERN SIDE

DP1X DEFLECTION PWB

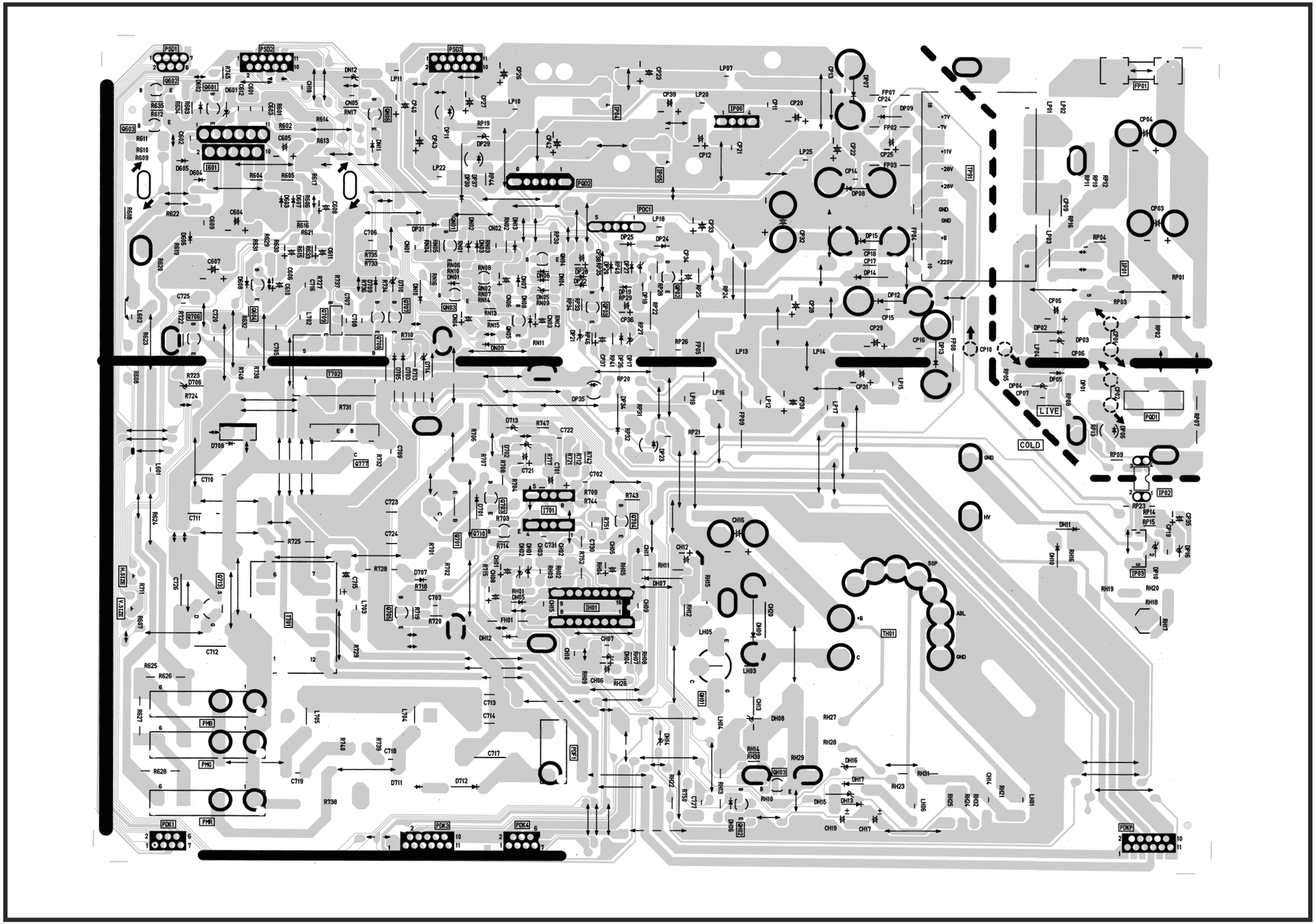

PRINTED CIRCUIT BOARD
COMPONENT SIDE

DP1X CONVERGENCE / DP1X SENSOR PWB / DP1X VM PWB

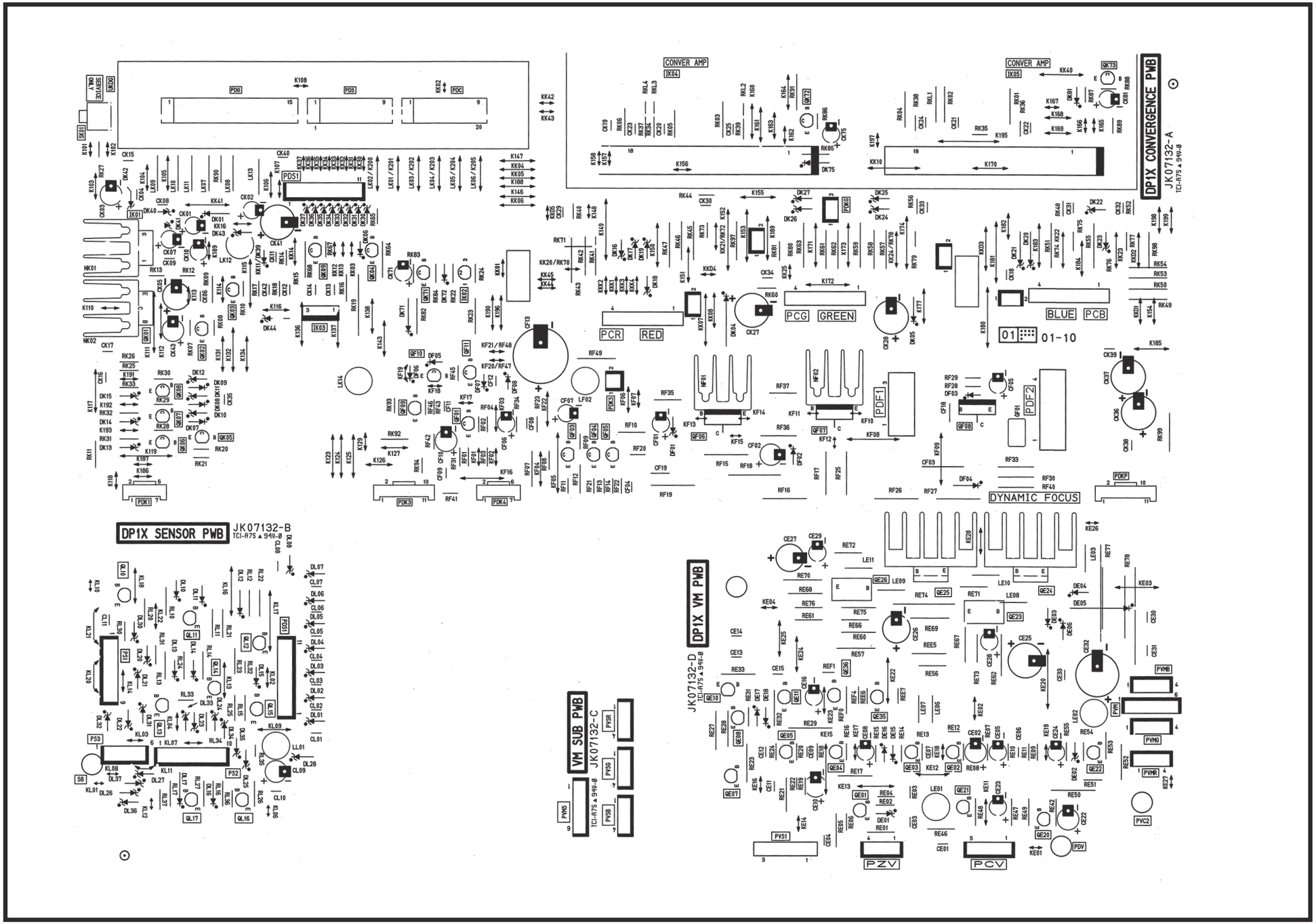

PRINTED CIRCUIT BOARD
PATTERN SIDE

DP1X CONVERGENCE / DP1X SENSOR PWB / DP1X VM PWB

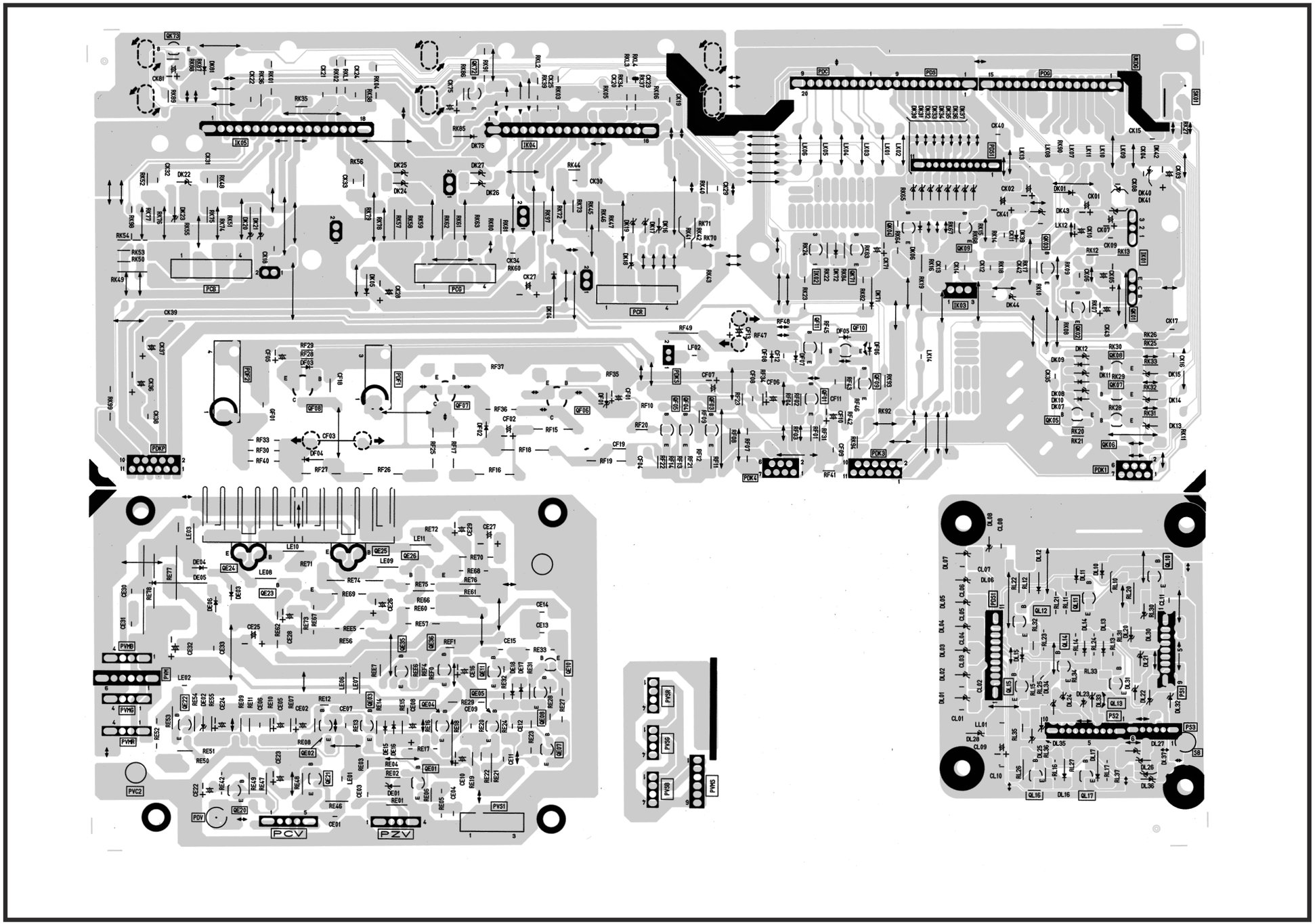

PRINTED CIRCUIT BOARD
COMPONENT SIDE

DP1X SRS/BBE PWB / DP1X TERMINAL PWB

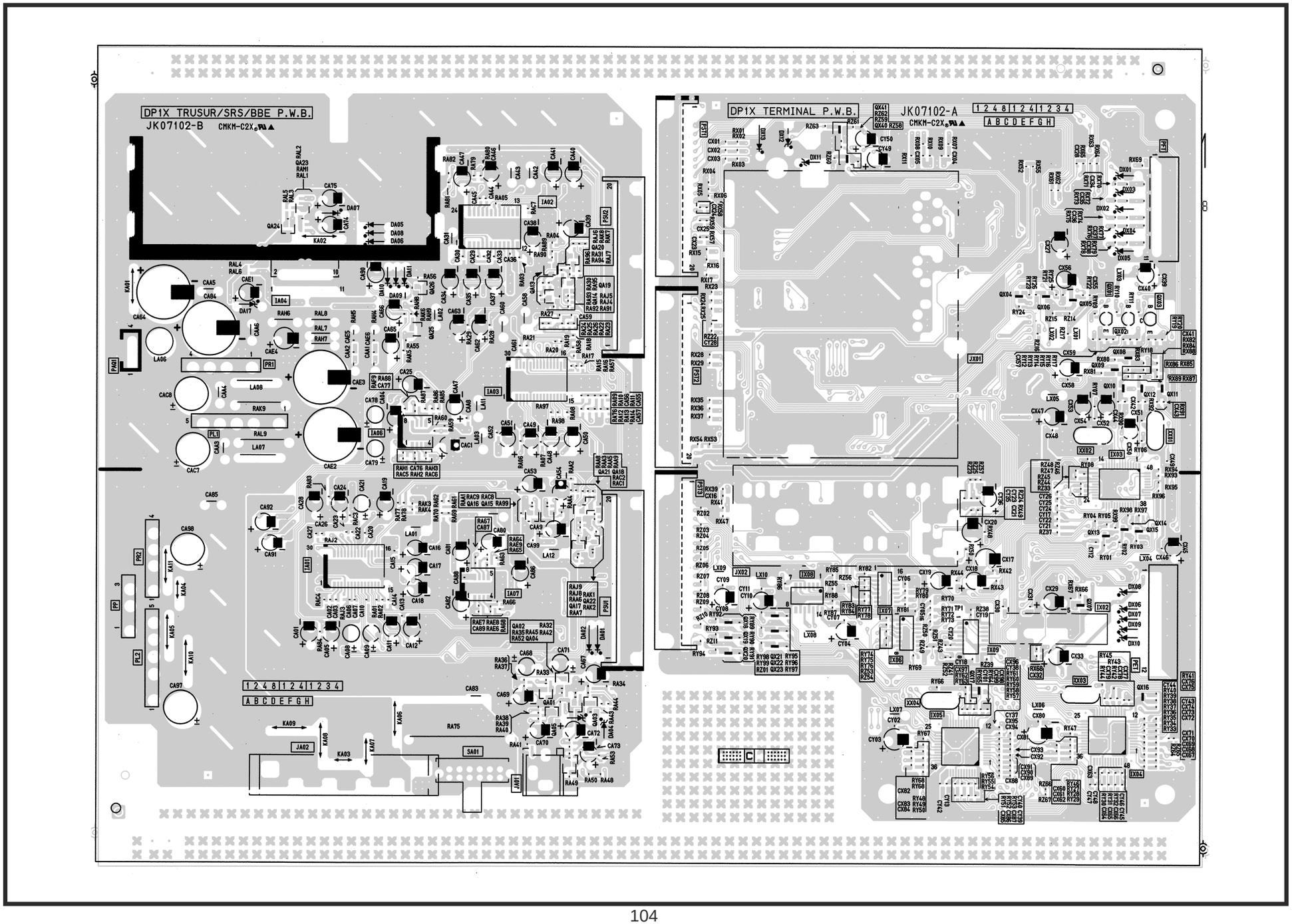

PRINTED CIRCUIT BOARD
PATTERN SIDE

DP1X SRS/BBE PWB / DP1X TERMINAL PWB

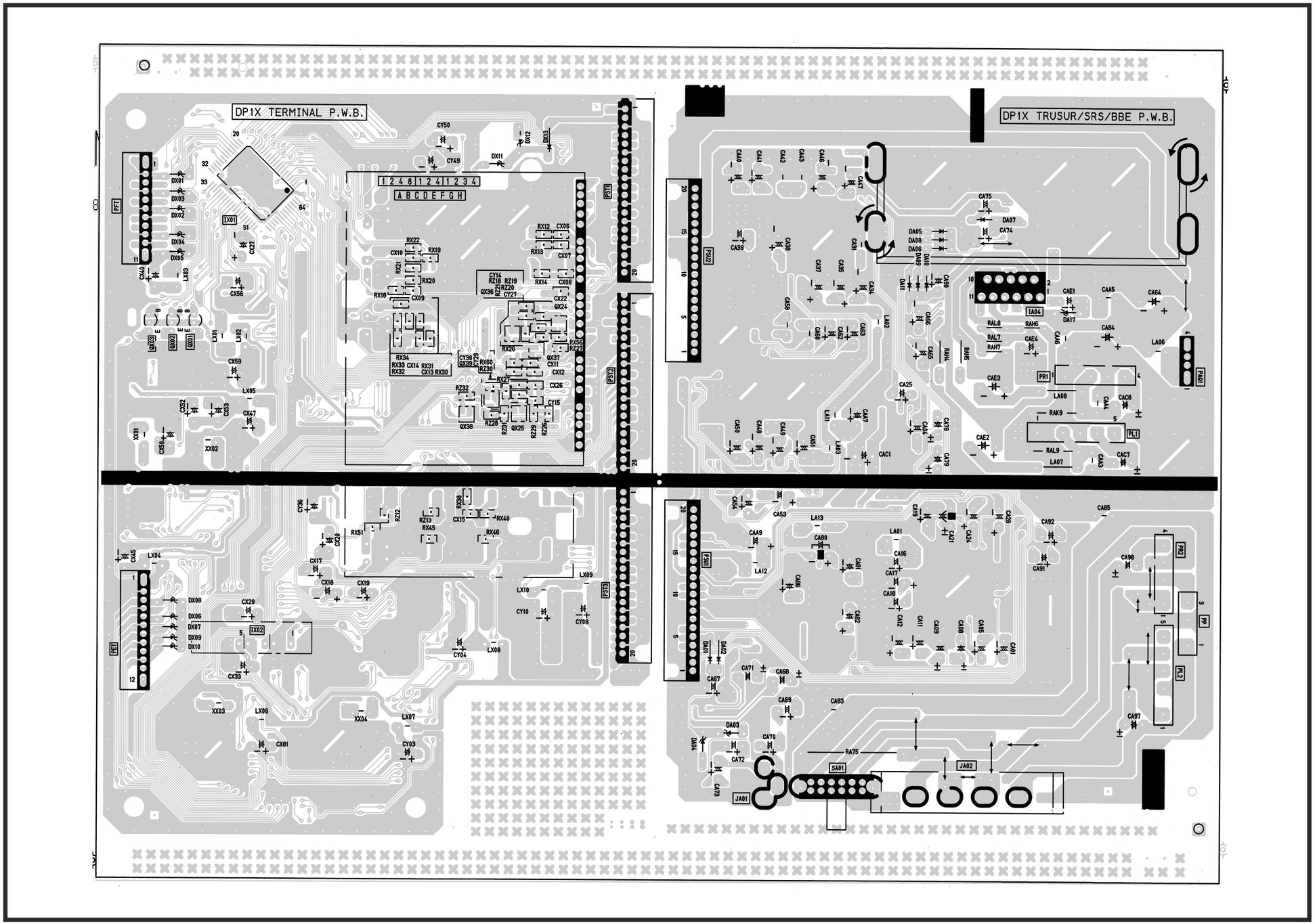

PRINTED CIRCUIT BOARD
COMPONENT SIDE

DP1X POWER SUPPLY PWB / DP1X CONTROL PWB

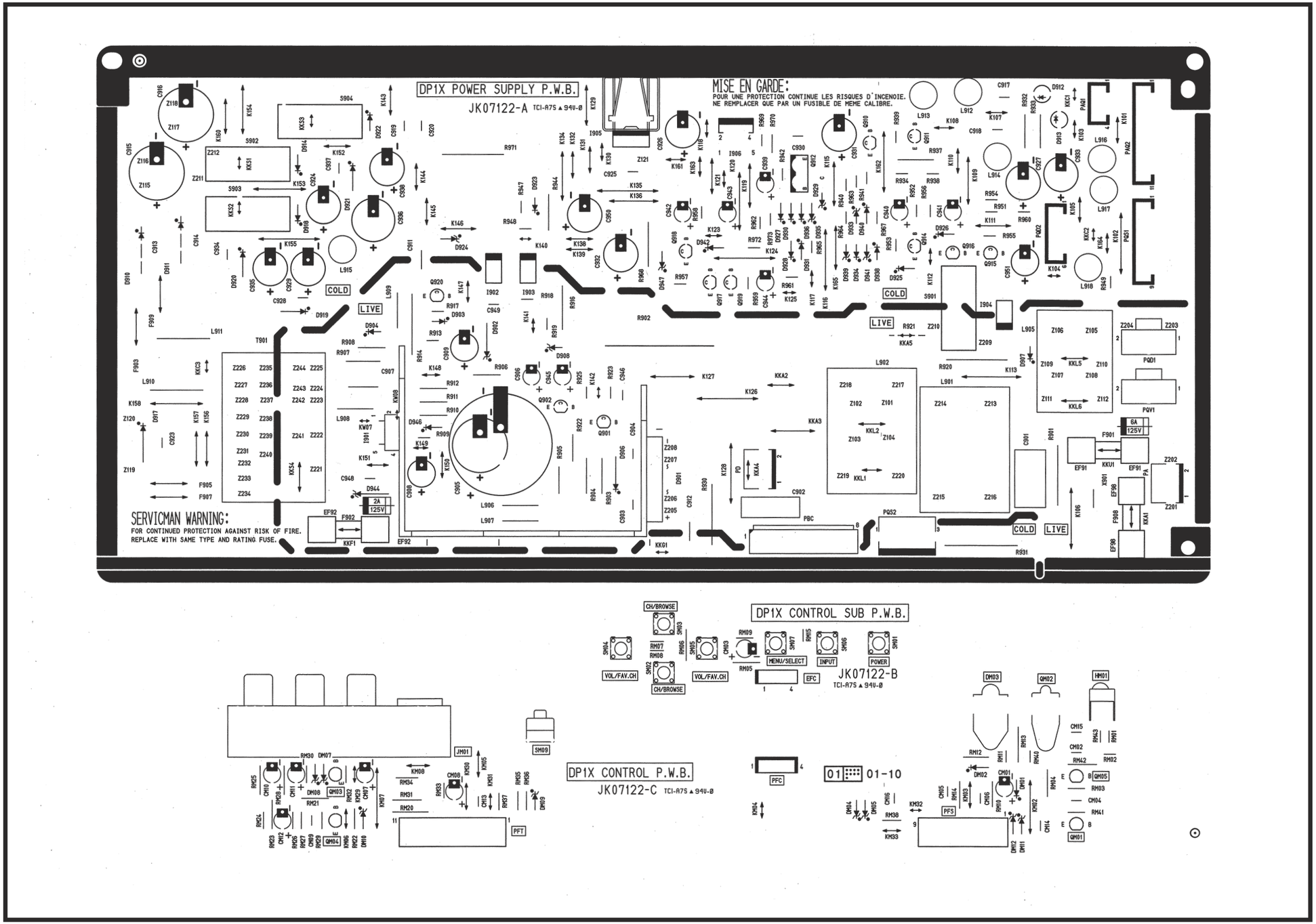

PRINTED CIRCUIT BOARD
PATTERN SIDE

DP1X POWER SUPPLY PWB / DP1X CONTROL PWB

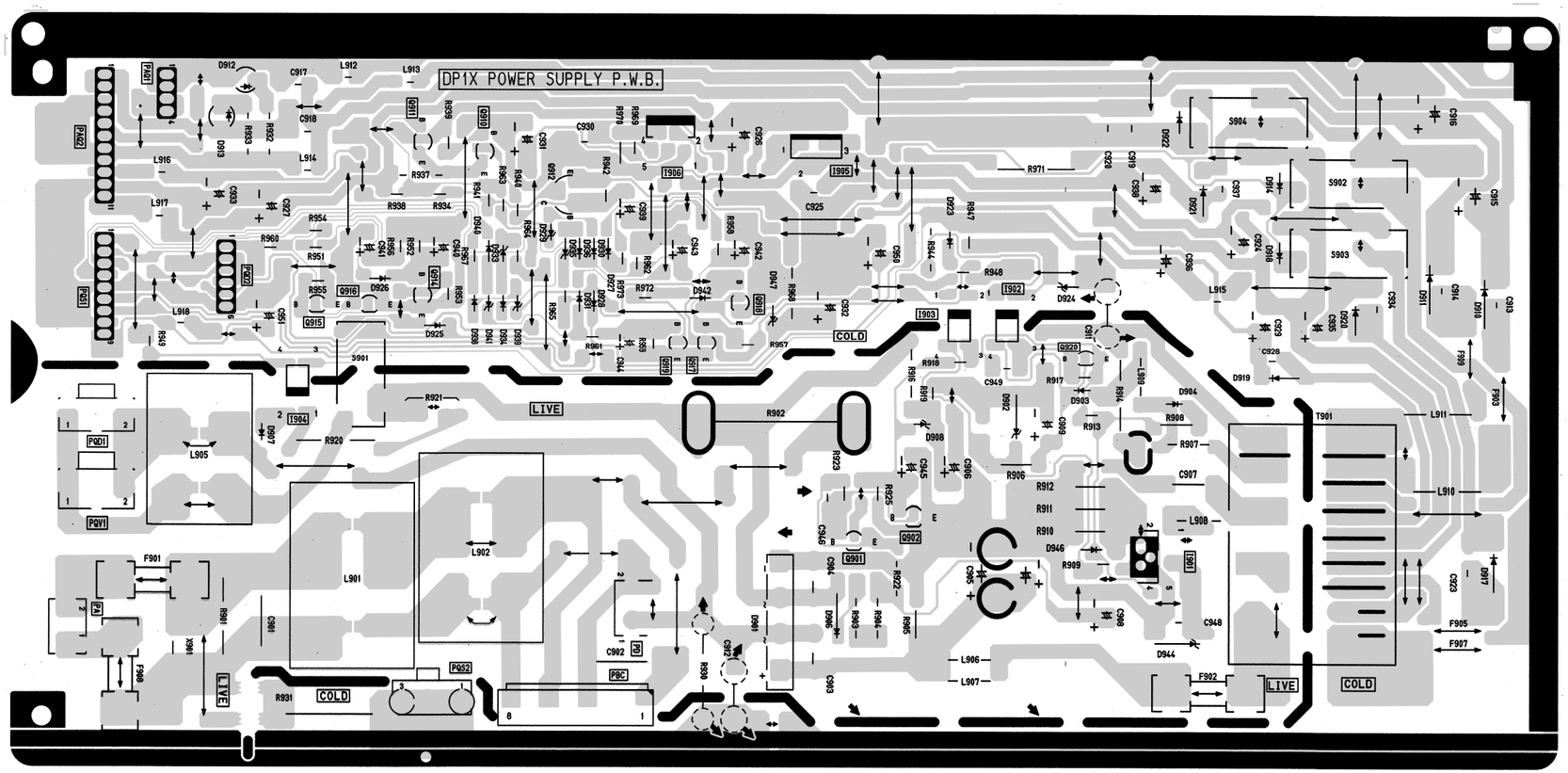

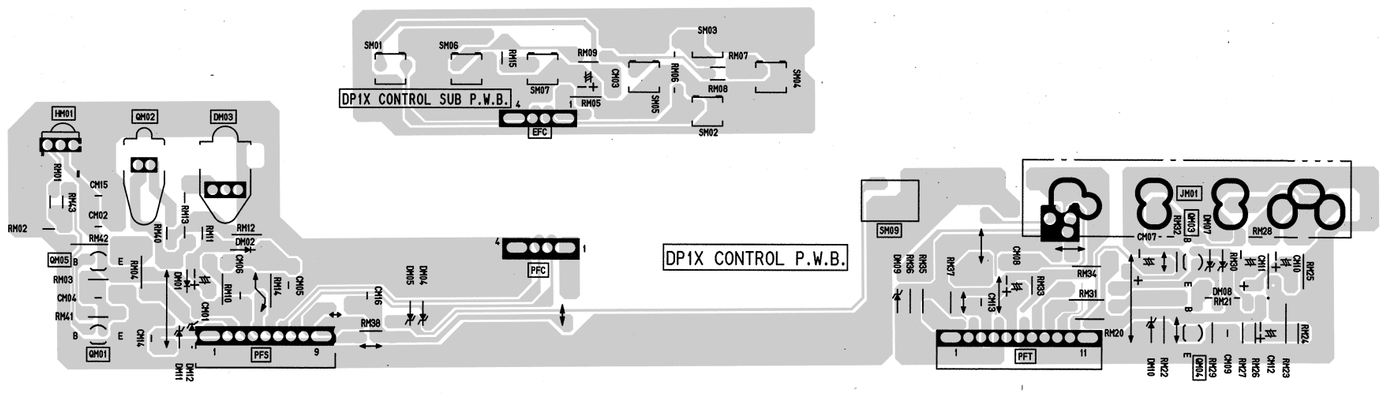

PRINTED CIRCUIT BOARD
COMPONENT SIDE

DP1X CPT P.W.B.

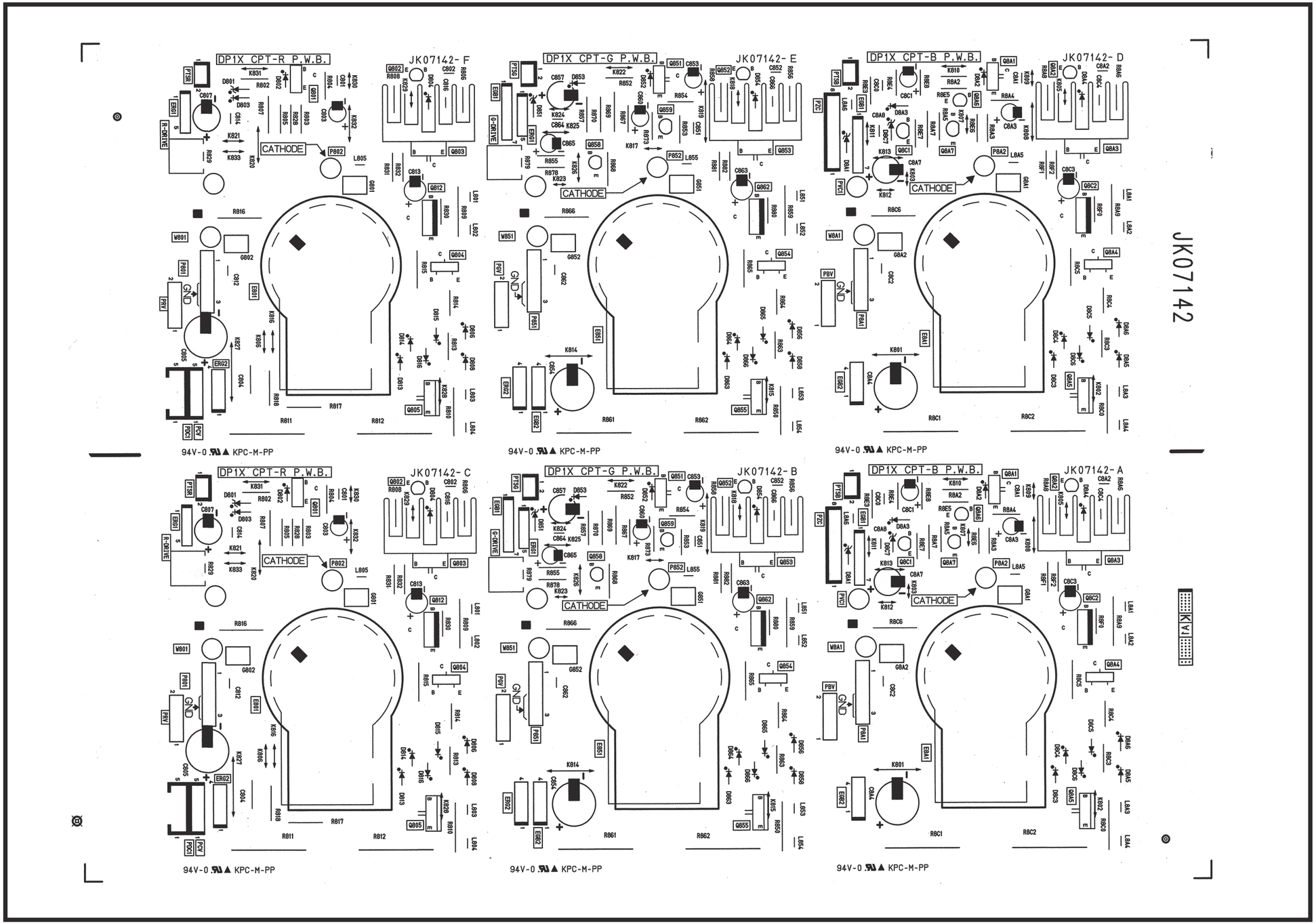

PRINTED CIRCUIT BOARD
PATTERN SIDE

DP1X CPT P.W.B.

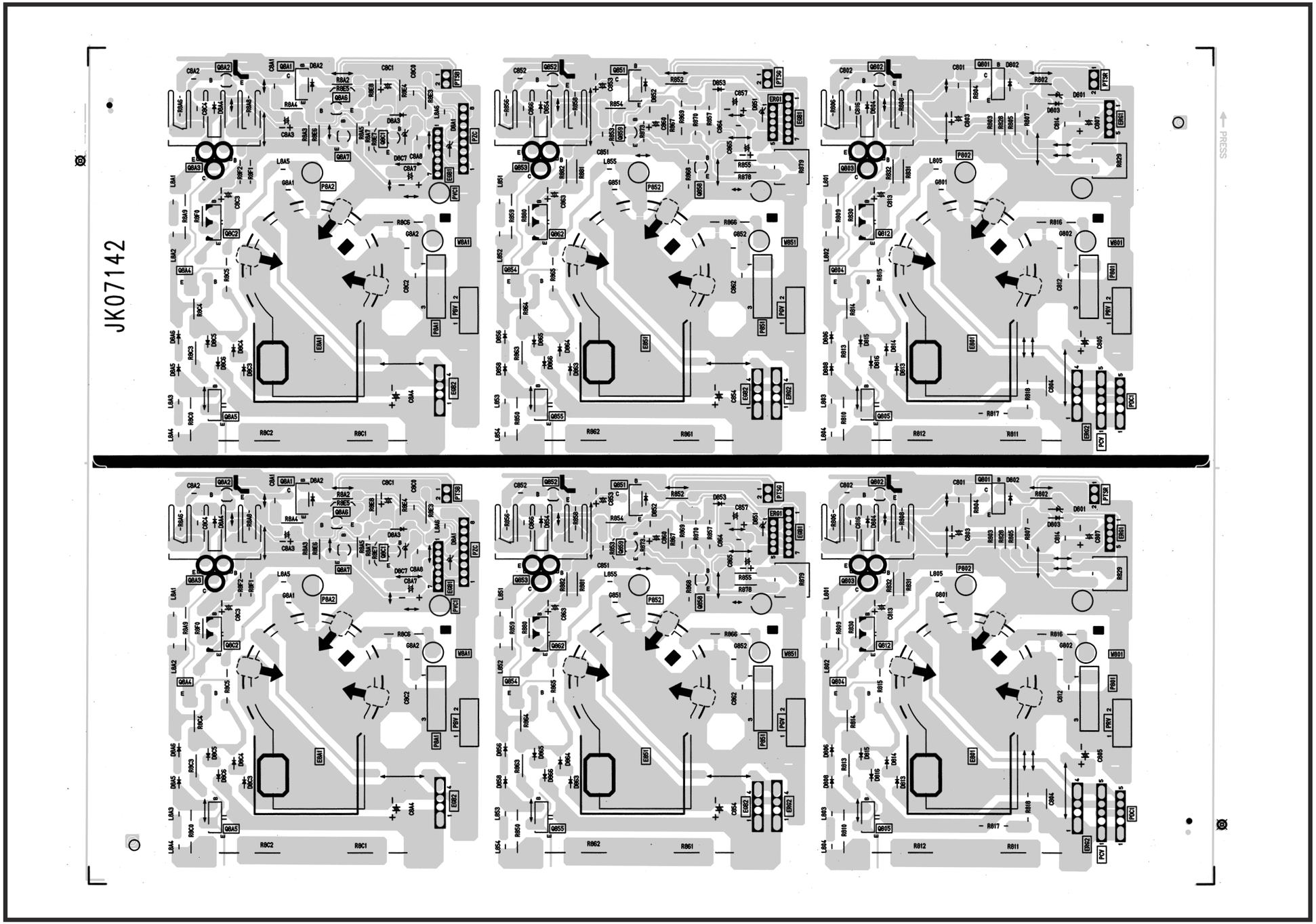

BLOCK DIAGRAM

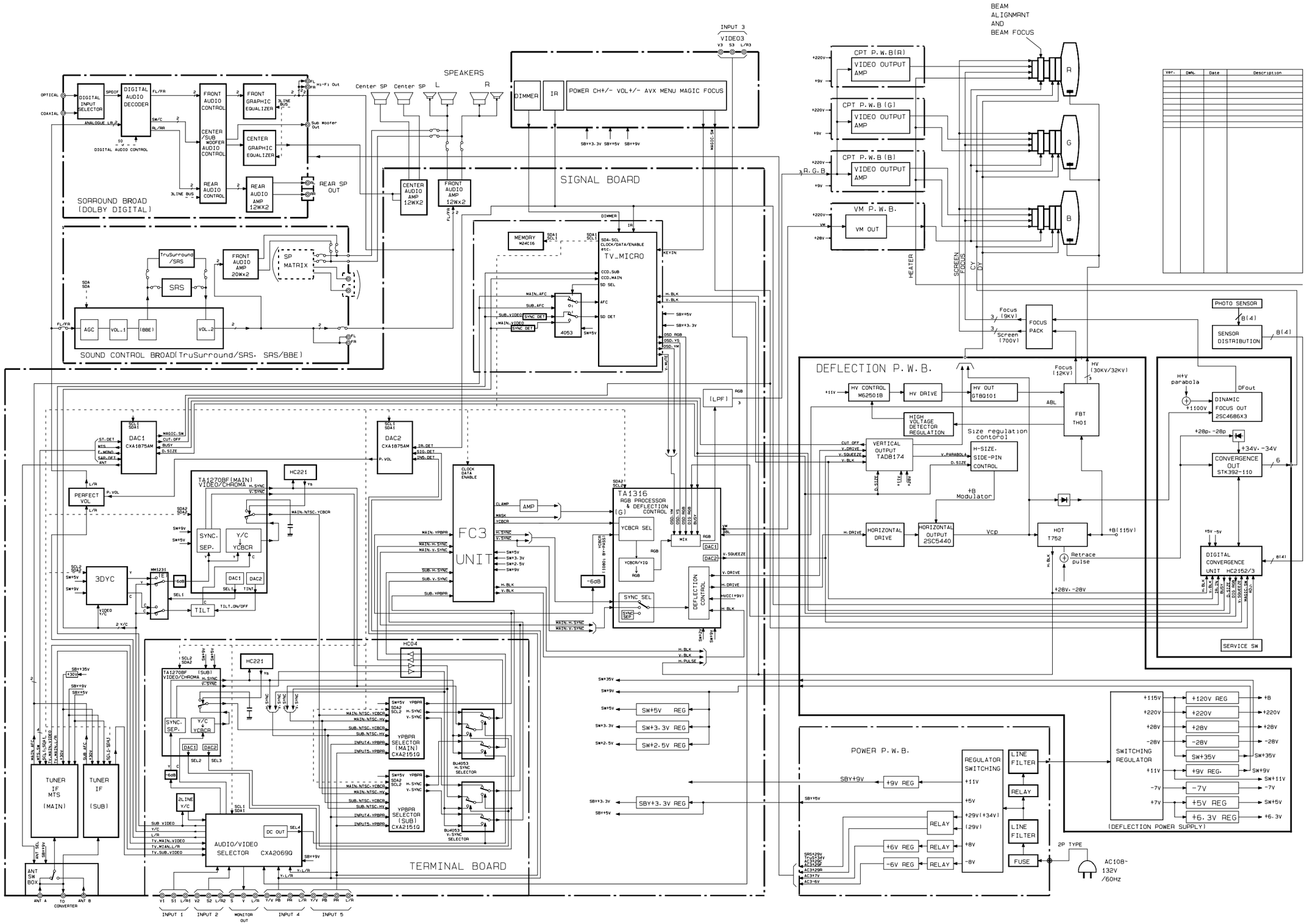

WIRING DIAGRAM

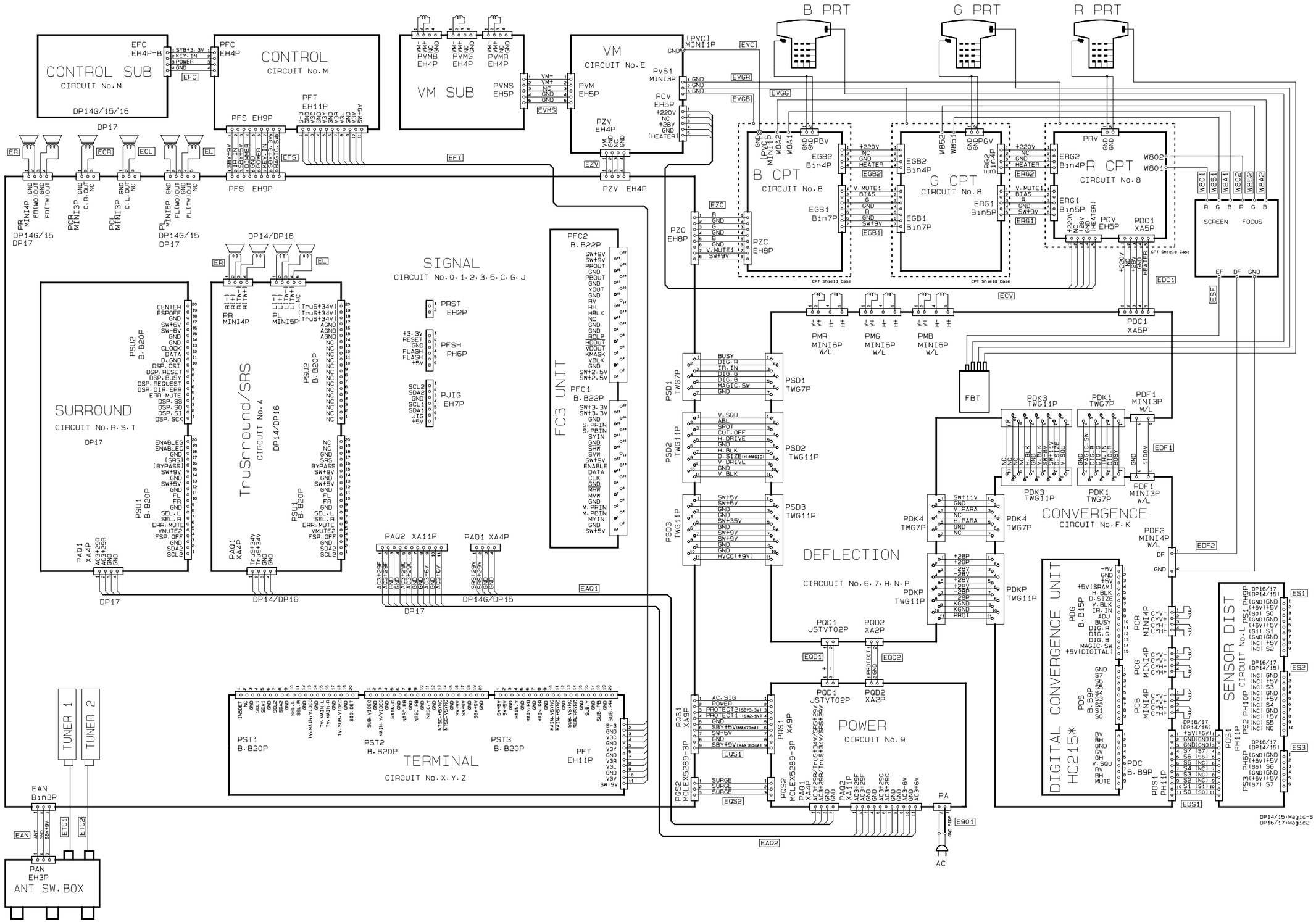

DP 15 CHASSIS WIRING

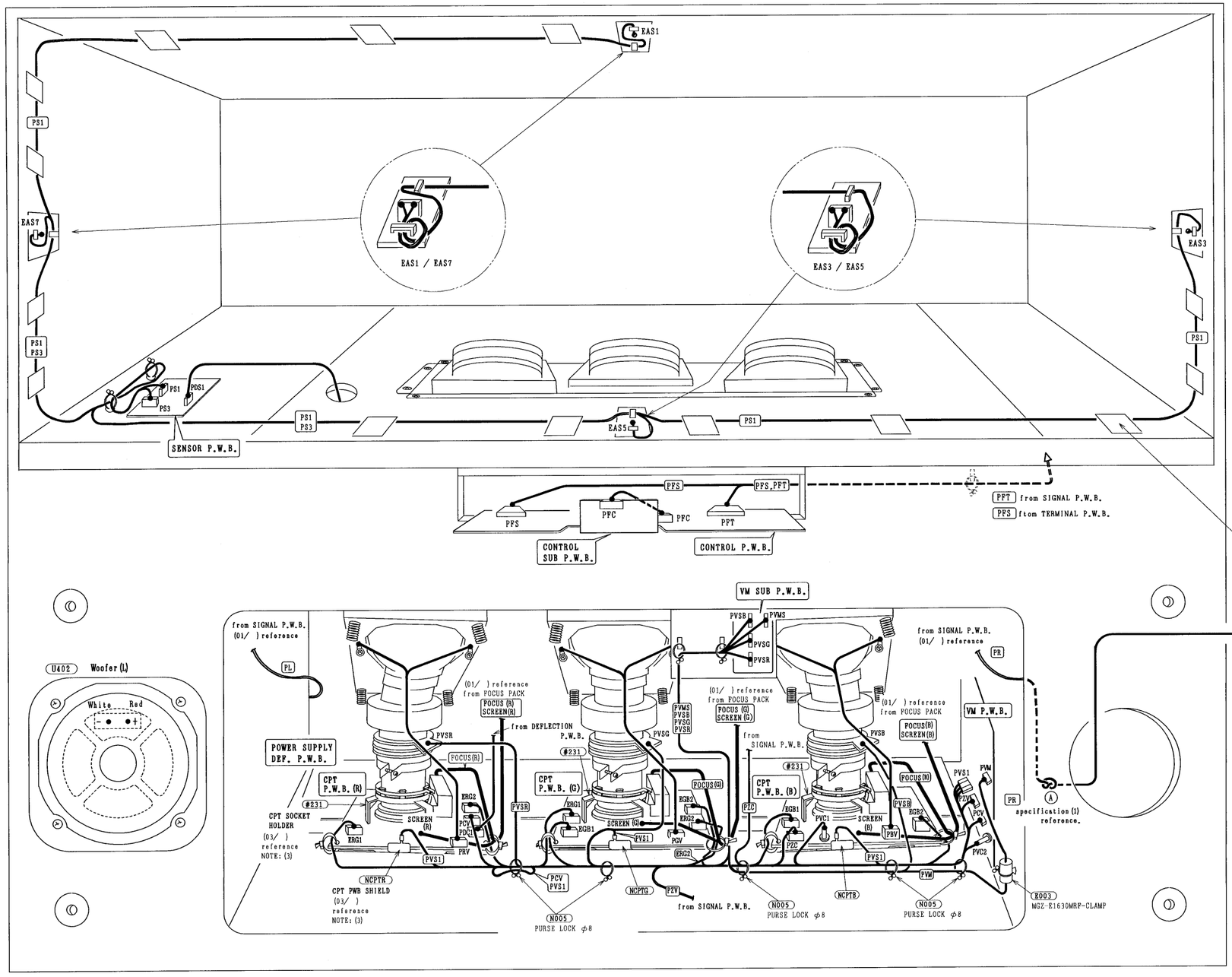

SPECIFICATION

(1) Make a knot as follow below Figure after wires is thorugh the hole (A) cabinet.

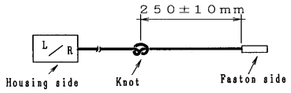

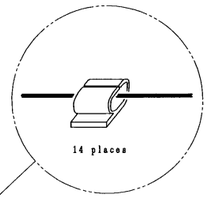

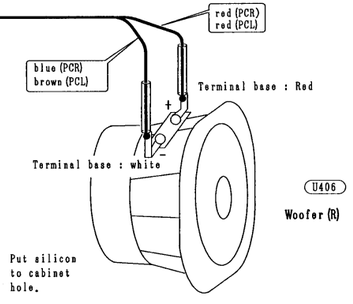

THIS DRAWING APPLIES TO 53UDX10B. (DP15 CHASS.)

DP15 CHASSIS WIRING

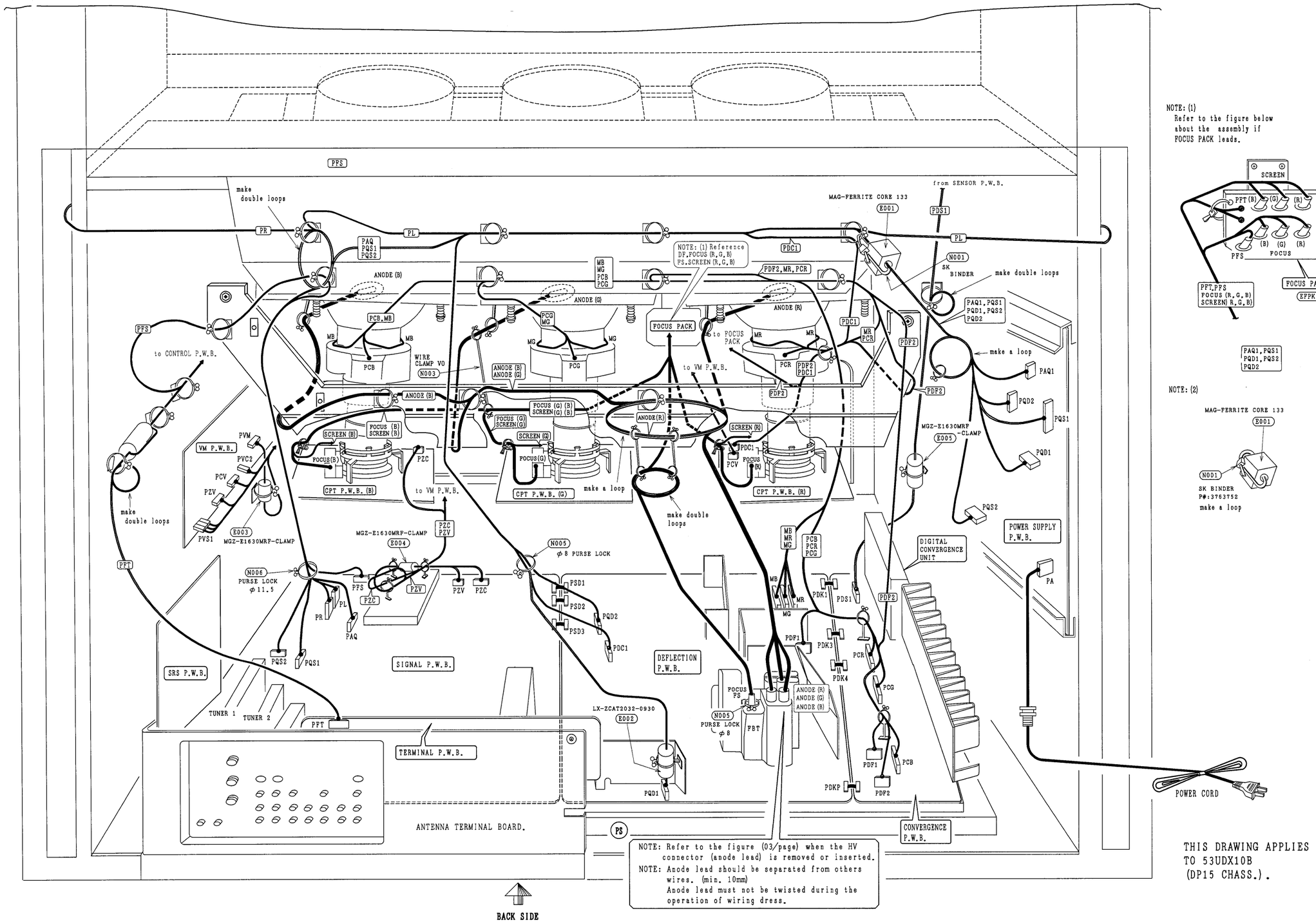

THIS DRAWING APPLIES TO 53UDX10B (DP15 CHASS.).

DP15E CHASSIS WIRING

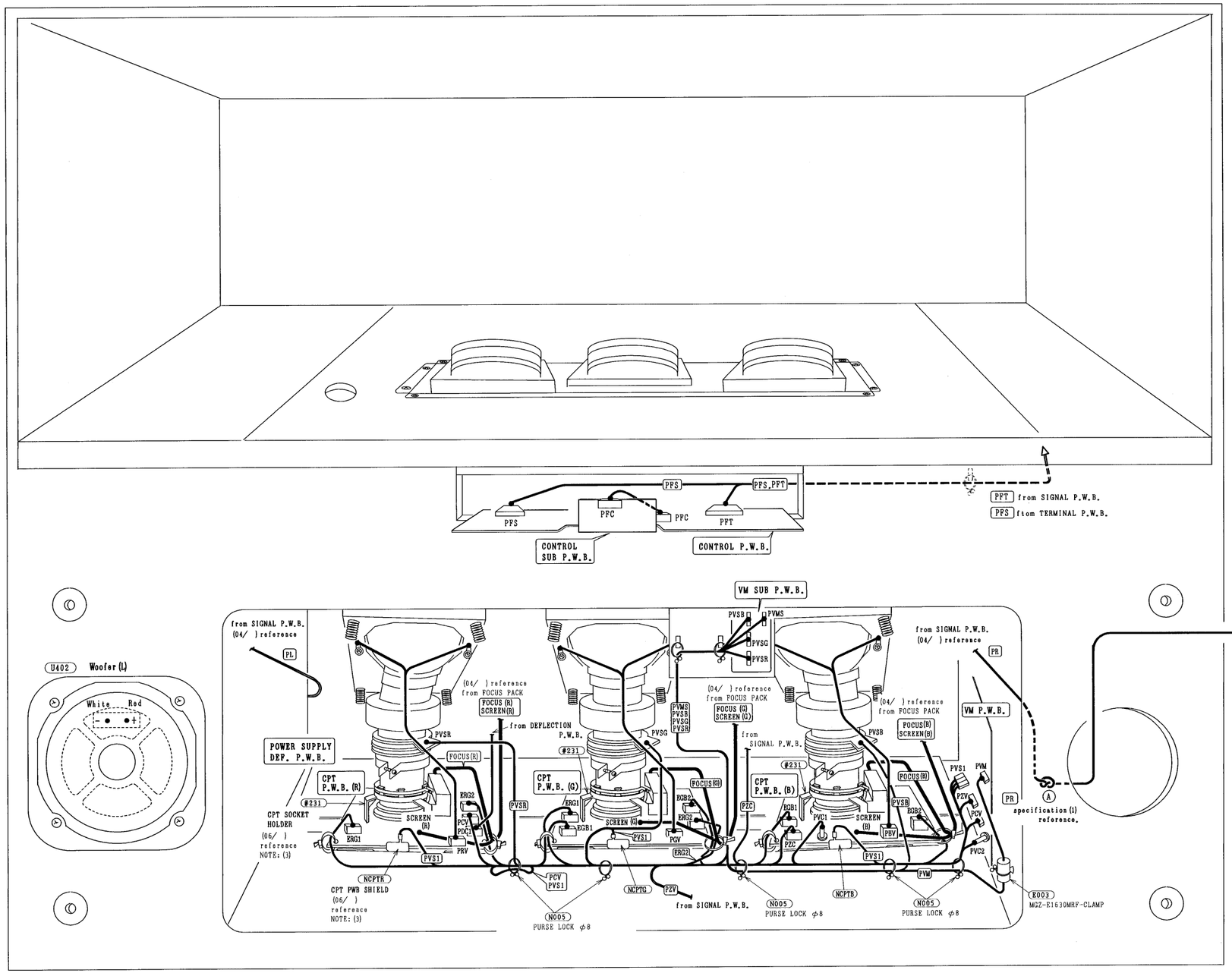

SPECIFICATION

(1) Make a knot as follow below Figure after wires is therugh the hole (A) cabinet.

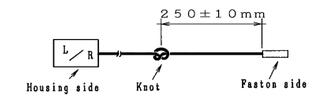

THIS DRAWING APPLIES TO 43FDX11B. (DP15E CHASS.)

DP15E CHASSIS WIRING

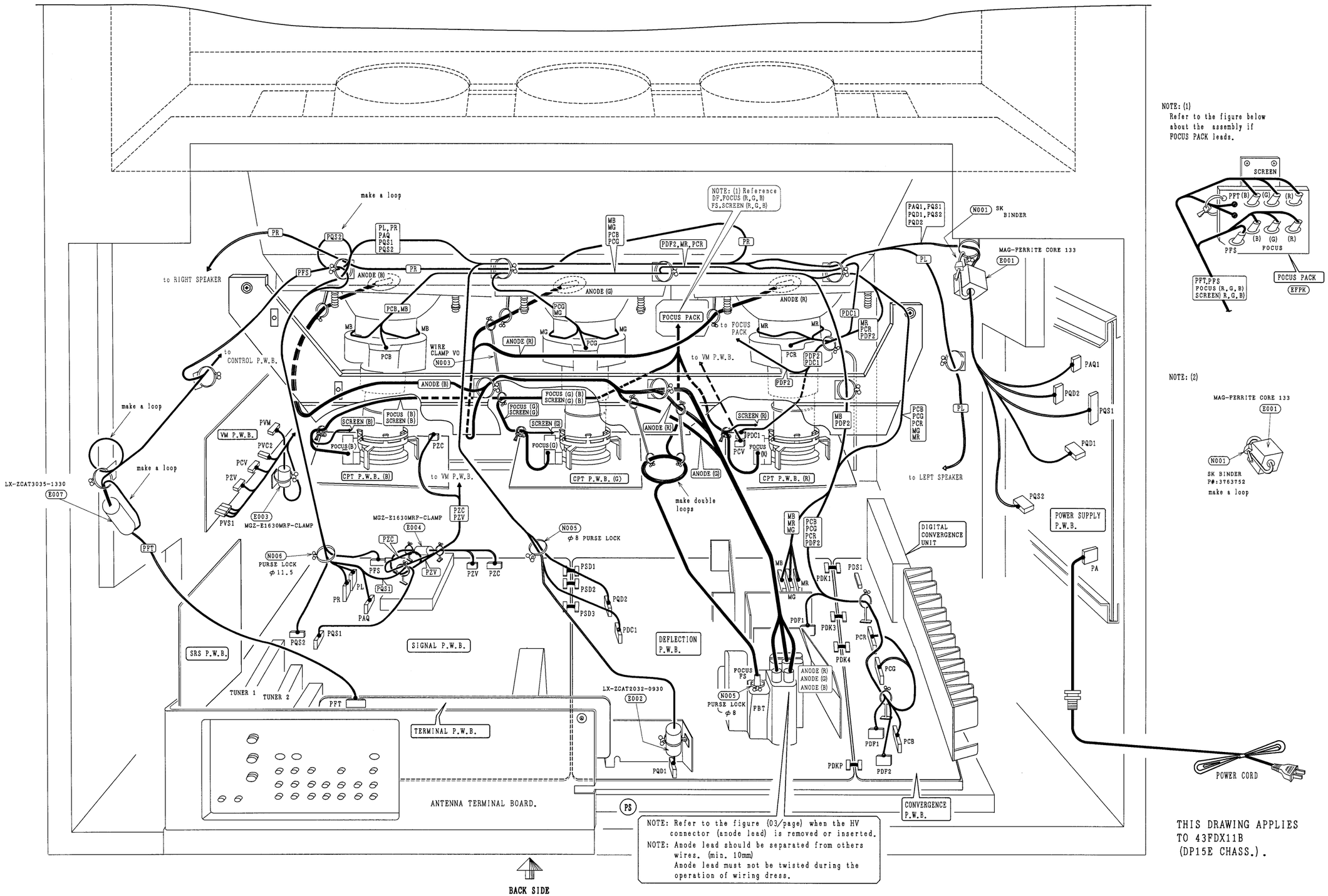

EXPLODED VIEW
53UDX10B 61UDX10B

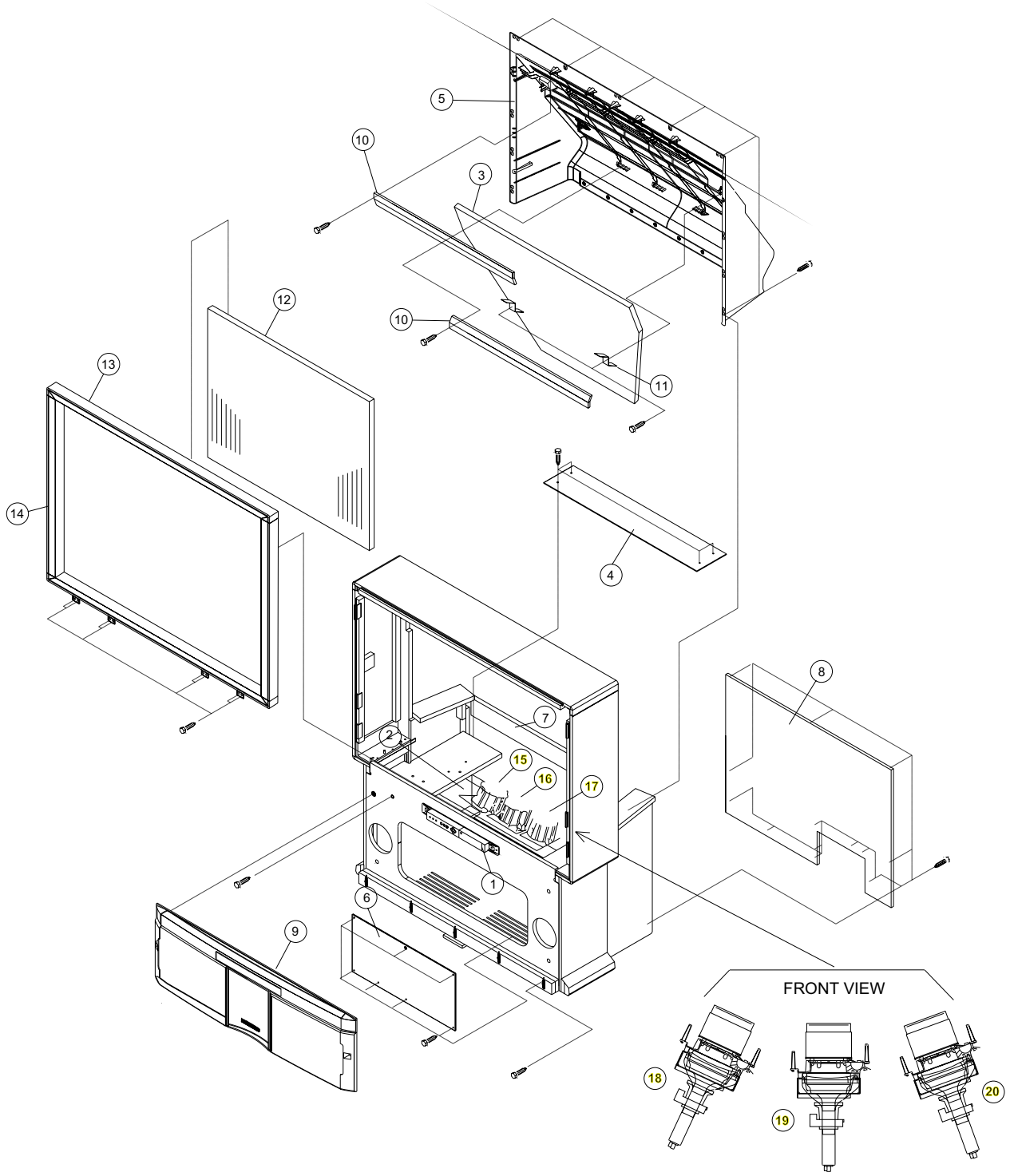

NOTES: Some parts may appear different than those shown in the exploded view. When ordering, refer to the replacement parts list for the correct part number. The circled numbers correspond to the parts list shown on **PAGE 118.**

EXPLODED VIEW
43FDX10B 43FDX11B

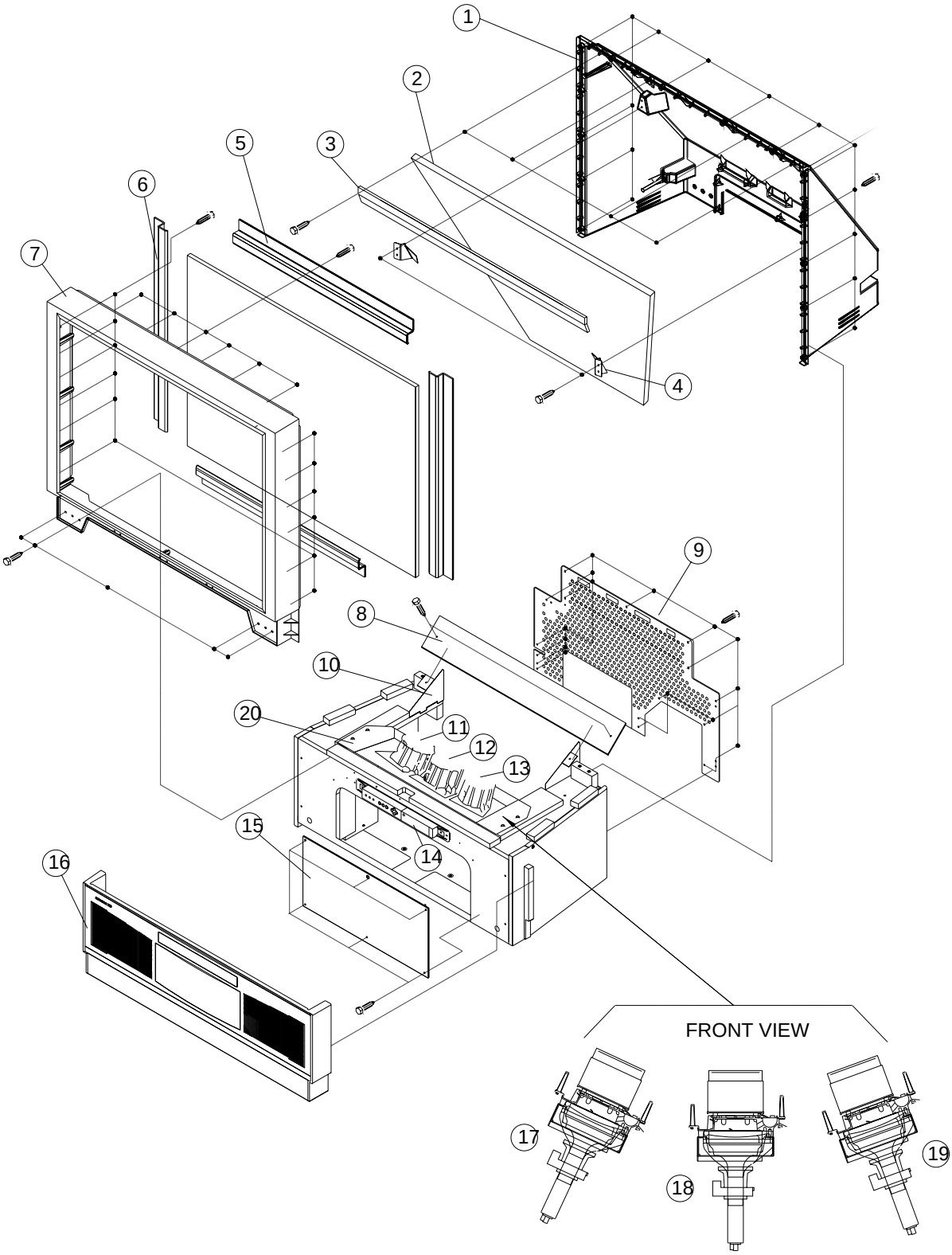

NOTES: Some parts may appear different than those shown in the exploded view. When ordering, refer to the replacement parts list for the correct part number. The circled numbers correspond to the parts list shown on page 118.

EXPLODED VIEW PARTS LIST

SYMBOL NO.	PART NO.	PART DESCRIPTION
		53UDX10B EXPLODED VIEW PARTS LIST
1	H311513	CONTROL PANEL
2	NA48901	CRT METAL
3	KS02021	MIRROR
4	N/A	BARRIER BOARD
5	QG00817	BACK COVER
6	55020075	FRONT DOOR
7	33200071	BACK CENTER BAR
8	H512289	LOWER REAR BOARD
9	PH08913	SPEAKER GRILLE
10	NJ04211	LONG GRIP
11	NJ04233/4	SIDE GRIP
12	KR00277	SCREEN ASSY
13	PH06983	TOP FRAME
14	QD07653	VERTICAL FRAME
15	KQ00166K	**LENS ASSY CPC (R/G)**
16	KQ00166K	**LENS ASSY CPC (R/G)**
17	KQ00161K	**LENS ASSY CPD (B)**
18	**UE08951**	**PRT ASSY (R)**
19	**UE08952**	**PRT ASSY (G)**
20	**UE08953**	**PRT ASSY (B)**

SYMBOL NO.	PART NO.	PART DESCRIPTION
		61UDX10B EXPLODED VIEW PARTS LIST
1	H311513	CONTROL PANEL
2	NA11705	MIRROR METAL
3	KS00163	MIRROR
4	N/A	BARRIER BOARD
5	QD04113	BACK COVER
6	55020085	FRONT DOOR
7	33200073	BACK CENTER BAR
8	H512282	LOWER REAR BOARD
9	PH07424	SPEAKER GRILLE
10	NJ04211	LONG GRIP
11	NJ04231/2	SIDE GRIP
12	KR01078	SCREEN ASSY
13	PH07022	TOP FRAME
14	QD07654	VERTICAL FRAME
15	KQ00811	CPD38 LENS ASSY (R)
16	KQ00811	CPD38 LENS ASSY (G)
17	KQ00811	CPD38 LENS ASSY (B)
18	**UE09191**	**PRT ASSY (R)**
19	**UE09192**	**PRT ASSY (G)**
20	**UE09193**	**PRT ASSY (B)**

SYMBOL NO.	PART NO.	PART DESCRIPTION
		43FDX10B EXPLODED VIEW PARTS LIST
1	QD08992	BACK COVER
2	KS02024	MIRROR
3	NA47451	H. MIRROR METAL
4	NA47441/2	CENTRAL METAL R/L
5	NT02371	H. SCREEN METAL
6	NT02372	V. SCREEN METAL
7	QD08983	FRAME
8	33010381	BARRIER BOARD
9	QG01191	LOWER REAR BOARD
10	NA49721/2	BARRIER SUPPORT METAL
11	KQ00823	DELTA38 C-ELEMENT R
12	KQ00822	DELTA38 C-ELEMENT G
13	KQ00821	DELTA38 C-ELEMENT B
14	H311513	CONTROL PANEL
15	55020080	FRONT DOOR
16	PH08305	SPEAKER GRILLE
17	UE07781	**PRT ASSY (R)**
18	UE07782	**PRT ASSY (G)**
19	UE07783	**PRT ASSY (B)**
20	NA48901	43" LENS CRT METAL
	KR01077	SCREEN ASSY

SYMBOL NO.	PART NO.	PART DESCRIPTION
		43FDX11B EXPLODED VIEW PARTS LIST
1	QD08992	BACK COVER
2	KS02024	MIRROR
3	NA47451	H. MIRROR METAL
4	NA47441/2	CENTRAL METAL R/L
5	NA47171	H. SCREEN METAL
6	NA47181	V. SCREEN METAL
7	QD08982	FRAME
8	33010381	BARRIER BOARD
9	QG01191	LOWER REAR BOARD
10	NA49721/2	BARRIER SUPPORT METAL
11	KQ00823	DELTA38 C-ELEMENT R
12	KQ00822	DELTA38 C-ELEMENT G
13	KQ00821	DELTA38 C-ELEMENT B
14	H311513	CONTROL PANEL
15	55020080	FRONT DOOR
16	PH08305	SPEAKER GRILLE
17	UE07781	**PRT ASSY (R)**
18	UE07782	**PRT ASSY (G)**
19	UE07783	**PRT ASSY (B)**
20	NA48901	43" LENS CRT METAL
	KR01074	SCREEN ASSY

REPLACEMENT PARTS LIST

PRODUCT SERVICE NOTE: Components marked with a ⚠ have special characteristics important to safety. Before replacing any of these components, read carefully, the PRODUCT SAFETY NOTICE of this Service Manual. Don't degrade the safety of the receiver through improper servicing.

ABBREVIATIONS

Capacitors:
- AL: Aluminum Electrolytic
- CD: Ceramic Disc
- EL: Electrolitic
- PF: Polyester Film
- PP: Polypropylene
- PL: Plastic
- TA: Tantalum
- PR: Paper
- TM: Trimmer
- MC: Mylar

Resistors:
- CF: Carbon Film
- CC: Carbon Composition
- MF: Metal Oxide
- VR: Variable Resistor
- WW: Wire Wound
- FR: Fuse Resistor
- MG: Metal Grazed

Semiconductors:
- TR: Transistor
- DI: Diode
- ZD: Zener Diode
- VA: Varistor
- TH: Termistor
- IC: Integrated Circuit

SYMBOL NO.	PART NO.	PART DESCRIPTION	SYMBOL NO.	PART NO.	PART DESCRIPTION
		CAPACITOR	C038	0800326R	CAP.-ELECTRO. 100UF-M 16V
C001	0800326R	CAP.-ELECTRO. 100UF-M 16V	C041	0800326R	CAP.-ELECTRO. 100UF-M 16V
C002	0893232R	CAP 1608CHIP 100000PFZF25V TAPE	C042	0893232R	CAP 1608CHIP 100000PFZF25V TAPE
C003	0800326R	CAP.-ELECTRO. 100UF-M 16V	C043	0893239R	CAP 1608CHIP 10000PFZF 50V TAPE
C004	0893232R	CAP 1608CHIP 100000PFZF25V TAPE	C044	0893232R	CAP 1608CHIP 100000PFZF25V TAPE
C005	0800326R	CAP.-ELECTRO. 100UF-M 16V	C045	0800326R	CAP.-ELECTRO. 100UF-M 16V
C006	0800326R	CAP.-ELECTRO. 100UF-M 16V	C046	0800279R	CAP.-ELECTORO. 1.0UF-M(SMG) 50V
C007	0893232R	CAP 1608CHIP 100000PFZF25V TAPE	C047	0800318R	CAP.-ELECTRO. 47UF-M 25V
C008	0800294R	CAP.-ELECTRO. 10UF-M(SMG) 50V	C048	0800318R	CAP.-ELECTRO. 47UF-M 25V
C009	0893119R	CAP 1608CHIP 33PFJCH 50V TAPE	C049	0800279R	CAP.-ELECTORO. 1.0UF-M(SMG) 50V
C010	0893119R	CAP 1608CHIP 33PFJCH 50V TAPE	C050	0893232R	CAP 1608CHIP 100000PFZF25V TAPE
C011	0893118R	CAP 1608CHIP 27PFJCH 50V TAPE	C051	0893213R	CAP1608CHIP 2200PFKB 50V TAPE
C012	0893118R	CAP 1608CHIP 27PFJCH 50V TAPE	C052	0800328R	CAP. ELECTRO. 100UF-M 35V
C013	0893216R	CAP 1608CHIP 3900PFKB 50V TAPE	C053	0800326R	CAP.-ELECTRO. 100UF-M 16V
C014	0893239R	CAP 1608CHIP 10000PFZF 50V TAPE	C054	0800294R	CAP.-ELECTRO. 10UF-M(SMG) 50V
C015	0800326R	CAP.-ELECTRO. 100UF-M 16V	C055	0800326R	CAP.-ELECTRO. 100UF-M 16V
C016	0800279R	CAP.-ELECTORO. 1.0UF-M(SMG) 50V	C056	0893232R	CAP 1608CHIP 100000PFZF25V TAPE
C017	0800279R	CAP.-ELECTORO. 1.0UF-M(SMG) 50V	C057	0893239R	CAP 1608CHIP 10000PFZF 50V TAPE
C018	0893208R	CAP 1608CHIP 1000PFKB 50V TAPE	C060	0800326R	CAP.-ELECTRO. 100UF-M 16V
C019	0800319R	CAP.-ELECTRO. 47UF-M 35V	C061	0800294R	CAP.-ELECTRO. 10UF-M(SMG) 50V
C023	0893205R	CAP 1608CHIP 560PFKB 50V TAPE	C064	0893232R	CAP 1608CHIP 100000PFZF25V TAPE
C024	0893239R	CAP 1608CHIP 10000PFZF 50V TAPE	C065	0800294R	CAP.-ELECTRO. 10UF-M(SMG) 50V
C025	0893128R	CAP 1608CHIP 150PFJCH 50V TAPE	C071	0893125R	CAP 1608CHIP 82PFJCH 50V TAPE
C026	0893126R	CAP 1608CHIP 100PFJCH 50V TAPE	C072	0893125R	CAP 1608CHIP 82PFJCH 50V TAPE
C027	0893232R	CAP 1608CHIP 100000PFZF25V TAPE	C073	0893125R	CAP 1608CHIP 82PFJCH 50V TAPE
C028	0800326R	CAP.-ELECTRO. 100UF-M 16V	C074	0893205R	CAP 1608CHIP 560PFKB 50V TAPE
C029	0893232R	CAP 1608CHIP 100000PFZF25V TAPE	C075	0893205R	CAP 1608CHIP 560PFKB 50V TAPE
C030	0893232R	CAP 1608CHIP 100000PFZF25V TAPE	C1A1	0800279R	CAP.-ELECTORO. 1.0UF-M(SMG) 50V
C031	0893133R	CAP 1608CHIP 330PFJCH 50V TAPE	C1A2	0800326R	CAP.-ELECTRO. 100UF-M 16V
C032	0800318R	CAP.-ELECTRO. 47UF-M 25V	C301	0800294R	CAP.-ELECTRO. 10UF-M(SMG) 50V
C034	0893232R	CAP 1608CHIP 100000PFZF25V TAPE	C302	0893239R	CAP 1608CHIP 10000PFZF 50V TAPE
C035	0893133R	CAP 1608CHIP 330PFJCH 50V TAPE	C303	AA01101R	CERAMIC CAPACITOR(1UF 10V-F)
C036	0800318R	CAP.-ELECTRO. 47UF-M 25V	C304	0800279R	CAP.-ELECTORO. 1.0UF-M(SMG) 50V

PRODUCT SERVICE NOTE: Components marked with a ⚠ have special characteristics important to sefety. Before replacing any of these components, read carefully, the PRODUCT SAFETY NOTICE of this Service Manual. Don't degrade the safety of the receiver through improper servicing.

SYMBOL NO.	PART NO.	PART DESCRIPTION	SYMBOL NO.	PART NO.	PART DESCRIPTION
C305	0893135R	CAP 1608CHIP 470PFJCH 50V TAPE	C511	0800352R	CAP.-ELECTRO.470UF 10V
C306	0800326R	CAP.-ELECTRO. 100UF-M 16V	C512	0893239R	CAP 1608CHIP 10000PFZF 50V TAPE
C307	0893239R	CAP 1608CHIP 10000PFZF 50V TAPE	C513	0893239R	CAP 1608CHIP 10000PFZF 50V TAPE
C308	AA01101R	CERAMIC CAPACITOR(1UF 10V-F)	C515	0800326R	CAP.-ELECTRO. 100UF-M 16V
C309	0893179R	CAP.CHIP-CERAMIC 100000PF 16V TAPE	C516	0893232R	CAP 1608CHIP 100000PFZF25V TAPE
C310	0893179R	CAP.CHIP-CERAMIC 100000PF 16V TAPE	C551	0800326R	CAP.-ELECTRO. 100UF-M 16V
C311	0800294R	CAP.-ELECTRO. 10UF-M(SMG) 50V	C552	0893232R	CAP 1608CHIP 100000PFZF25V TAPE
C312	0800294R	CAP.-ELECTRO. 10UF-M(SMG) 50V	C553	0893179R	CAP.CHIP-CERAMIC 100000PF 16V TAPE
C313	0893179R	CAP.CHIP-CERAMIC 100000PF 16V TAPE	C554	0893232R	CAP 1608CHIP 100000PFZF25V TAPE
C314	0893179R	CAP.CHIP-CERAMIC 100000PF 16V TAPE	C555	0800326R	CAP.-ELECTRO. 100UF-M 16V
C315	AA01101R	CERAMIC CAPACITOR(1UF 10V-F)	C556	0893114R	CAP 1608CHIP 12PFJCH 50V TAPE
C316	0893179R	CAP.CHIP-CERAMIC 100000PF 16V TAPE	C557	0800273R	CAP.-ELECTRO 0.22UF-M 50V
C317	0893179R	CAP.CHIP-CERAMIC 100000PF 16V TAPE	C558	0893213R	CAP1608CHIP 2200PFKB 50V TAPE
C318	AA01101R	CERAMIC CAPACITOR(1UF 10V-F)	C559	0893222R	CAP 1608CHIP10000PFKB 50V TAPE
C319	AA01101R	CERAMIC CAPACITOR(1UF 10V-F)	C560	0800282R	CAP.-ELECTORO. 2.2UF-M(SMG) 50V
C320	0800294R	CAP.-ELECTRO. 10UF-M(SMG) 50V	C561	0893179R	CAP.CHIP-CERAMIC 100000PF 16V TAPE
C321	0893179R	CAP.CHIP-CERAMIC 100000PF 16V TAPE	C562	0800282R	CAP.-ELECTORO. 2.2UF-M(SMG) 50V
C322	0800282R	CAP.-ELECTORO. 2.2UF-M(SMG) 50V	C563	0893217R	CAP 1608CHIP 4700PFKB 50V TAPE
C323	0800282R	CAP.-ELECTORO. 2.2UF-M(SMG) 50V	C564	0893232R	CAP 1608CHIP 100000PFZF25V TAPE
C324	0893115R	CAP 1608CHIP 15PFJCH 50V TAPE	C565	0800326R	CAP.-ELECTRO. 100UF-M 16V
C325	0893123R	CAP 1608CHIP 56PFJCH 50V TAPE	C566	0800294R	CAP.-ELECTRO. 10UF-M(SMG) 50V
C326	0893115R	CAP 1608CHIP 15PFJCH 50V TAPE	C567	0800294R	CAP.-ELECTRO. 10UF-M(SMG) 50V
C327	0893239R	CAP 1608CHIP 10000PFZF 50V TAPE	C568	0800294R	CAP.-ELECTRO. 10UF-M(SMG) 50V
C328	0800326R	CAP.-ELECTRO. 100UF-M 16V	C569	0800294R	CAP.-ELECTRO. 10UF-M(SMG) 50V
C329	0800294R	CAP.-ELECTRO. 10UF-M(SMG) 50V	C570	0893232R	CAP 1608CHIP 100000PFZF25V TAPE
C330	0800282R	CAP.-ELECTORO. 2.2UF-M(SMG) 50V	C571	0893222R	CAP 1608CHIP10000PFKB 50V TAPE
C331	AA01101R	CERAMIC CAPACITOR(1UF 10V-F)	C572	0893123R	CAP 1608CHIP 56PFJCH 50V TAPE
C332	0893179R	CAP.CHIP-CERAMIC 100000PF 16V TAPE	C573	0893222R	CAP 1608CHIP10000PFKB 50V TAPE
C333	0893179R	CAP.CHIP-CERAMIC 100000PF 16V TAPE	C574	0893232R	CAP 1608CHIP 100000PFZF25V TAPE
C334	0893134R	CAP 1608CHIP 390PFJCH 50V TAPE	C575	0800326R	CAP.-ELECTRO. 100UF-M 16V
C335	AA01101R	CERAMIC CAPACITOR(1UF 10V-F)	C576	AA01111R	CERAMIC CAPACITOR(1.0UF 6.3V)
C336	AA01101R	CERAMIC CAPACITOR(1UF 10V-F)	C577	AA01101R	CERAMIC CAPACITOR(1UF 10V-F)
C337	0893117R	CAP 1608CHIP 22PFJCH 50V TAPE	C578	AA01111R	CERAMIC CAPACITOR(1.0UF 6.3V)
C338	0893117R	CAP 1608CHIP 22PFJCH 50V TAPE	C579	AA01101R	CERAMIC CAPACITOR(1UF 10V-F)
C340	0800326R	CAP.-ELECTRO. 100UF-M 16V	C580	0893232R	CAP 1608CHIP 100000PFZF25V TAPE
C341	AA01101R	CERAMIC CAPACITOR(1UF 10V-F)	C582	0893232R	CAP 1608CHIP 100000PFZF25V TAPE
C343	AA01101R	CERAMIC CAPACITOR(1UF 10V-F)	C5C0	0893232R	CAP 1608CHIP 100000PFZF25V TAPE
C344	0893239R	CAP 1608CHIP 10000PFZF 50V TAPE	C5C1	0893132R	CAP 1608CHIP 270PFJCH 50V TAPE
C345	0893111R	CAP 1608CHIP 8PFCCH 50V TAPE	C5C3	0893179R	CAP.CHIP-CERAMIC 100000PF 16V TAPE
C346	0893179R	CAP.CHIP-CERAMIC 100000PF 16V TAPE	C5C4	0893179R	CAP.CHIP-CERAMIC 100000PF 16V TAPE
C347	0893119R	CAP 1608CHIP 33PFJCH 50V TAPE	C5C5	0893179R	CAP.CHIP-CERAMIC 100000PF 16V TAPE
C348	0800326R	CAP.-ELECTRO. 100UF-M 16V	C5C6	0893179R	CAP.CHIP-CERAMIC 100000PF 16V TAPE
C349	0893239R	CAP 1608CHIP 10000PFZF 50V TAPE	C5C7	0893179R	CAP.CHIP-CERAMIC 100000PF 16V TAPE
C350	0800294R	CAP.-ELECTRO. 10UF-M(SMG) 50V	C5C8	0893179R	CAP.CHIP-CERAMIC 100000PF 16V TAPE
C351	0893119R	CAP 1608CHIP 33PFJCH 50V TAPE	C601	0880047R	CAP.-POLYESTER 0.018UF-KEB 50V
C352	0800326R	CAP.-ELECTRO. 100UF-M 16V	C602	0880194R	CAP.-POLYESTER 0.1UF-J 50V
C353	0893232R	CAP 1608CHIP 100000PFZF25V TAPE	C603	0880055R	CAP.-POLYESTER 0.068UF-KEB 50V
C501	0800352R	CAP.-ELECTRO.470UF 10V	C604	0800347N	CAP.-ELECTRO. 330UF-M(SMG) 50V
C502	0893239R	CAP 1608CHIP 10000PFZF 50V TAPE	C605	0800329R	CAP.-ELECTRO. 100UF-M(SMG) 50V
C503	0893239R	CAP 1608CHIP 10000PFZF 50V TAPE	C606	AL01162R	CAP.ELECTRO 10UF-M(YXF)50V
C504	0800352R	CAP.-ELECTRO.470UF 10V	C607	AL01143S	CAP.ELECTROLYTIC 2200UF-M(YXF)25V
C505	0893239R	CAP 1608CHIP 10000PFZF 50V TAPE	C608	AL01336R	ALUMINIUM ELECT. CAPACITOR PW(10UF 16V)
C506	0893239R	CAP 1608CHIP 10000PFZF 50V TAPE	C609	0279692R	CAP.-POLYESTER 0.068UF 100V
C508	0800352R	CAP.-ELECTRO.470UF 10V	C610	0800318R	CAP.-ELECTRO. 47UF-M 25V
C509	0893239R	CAP 1608CHIP 10000PFZF 50V TAPE	C611	0800294R	CAP.-ELECTRO. 10UF-M(SMG) 50V
C510	0893239R	CAP 1608CHIP 10000PFZF 50V TAPE	C612	0880035R	CAP.-POLY 2200PF-50V

PRODUCT SERVICE NOTE: Components marked with a ⚠ have special characteristics important to sefety. Before replacing any of these components, read carefully, the PRODUCT SAFETY NOTICE of this Service Manual. Don't degrade the safety of the receiver through improper servicing.

SYMBOL NO.	PART NO.	PART DESCRIPTION	SYMBOL NO.	PART NO.	PART DESCRIPTION
C701	0800353R	CAP.-ELECTRO.470UF-M 16V	⚠ C901	AN01445S	ACROSS CAPA 0.22UF 250V RE224
C702	0880203R	CAP.-POLYESTER 0.47UF-J 50V	⚠ C902	AN01443S	ACROSS CAPA 0.1UF 250V RE104
C703	0800279R	CAP.-ELECTORO. 1.0UF-M(SMG) 50V	⚠ C903	AJ00195F	CAP. CERAMIC CK45-F2EA472ZYNN
C705	0880194R	CAP.-POLYESTER 0.1UF-J 50V	⚠ C904	AJ00195F	CAP. CERAMIC CK45-F2EA472ZYNN
C707	0244505R	CAP-CERAMIC 0.0022UF-K 500V	C905	AL01749	120UF 250V KMH(M)ALUMINIUM ELECTROLYTIC CAPA
C708	0243509R	CAP.-CERAMIC 470PF-K 500V	C907	0299616F	CAPACITOR-POLYPROPYLENE FILM 0.0033UF-J 630V
C709	0890081R	CAP.-CERAMIC 330PF 50V	C908	0800319R	CAP.-ELECTRO. 47UF-M 35V
⚠ C710	AN01648F	4700PF 1500V METALLIZ POLYPROPYLENE FILM CAPA	C909	0800329R	CAP.-ELECTRO. 100UF-M(SMG) 50V
⚠ C711	AN01648F	4700PF 1500V METALLIZ POLYPROPYLENE FILM CAPA	C910	0800319R	CAP.-ELECTRO. 47UF-M 35V
C713	AN01176F	CAPACITOR 0.39UF 250V METALLIZ POLYPROPYLENE	⚠ C911	AJ00184F	CAP. CERAMIC CD12-E2GA222MYNS
C714	AN01176F	CAPACITOR 0.39UF 250V METALLIZ POLYPROPYLENE	⚠ C912	AJ00182F	CAP. CERAMIC CD85-E2GA102MYNS
C715	0284634R	CAP.-ELECTRO 4.7UF-SME(BP) 50V	C913	0243511R	CAP.-CERAMIC 680PF-K 500V TAPE
C716	0880194R	CAP.-POLYESTER 0.1UF-J 50V	C915	AL01875R	1000UF 50V ALUMINIUM ELECTROLYTIC CAPACITOR
C717	AN01657F	10000PF 1500V METALLIZ POLYPROPYLENE FILM CAP	C917	0880198R	CAP.-PLOY. 0.22UF-J 50V
C718	0244505R	CAP-CERAMIC 0.0022UF-K 500V	C919	0244105R	CAP.-CERAMIC 2200PF-K 50V TAPE
C719	0244505R	CAP-CERAMIC 0.0022UF-K 500V	C920	0880009R	CAP.-POLYESTER 0.01UF-K 50V
C720	0880194R	CAP.-POLYESTER 0.1UF-J 50V	C928	0243511R	CAP.-CERAMIC 680PF-K 500V TAPE
C721	0800326R	CAP.-ELECTRO. 100UF-M 16V	C929	AL01129S	CAP.ELECTROLYTIC 1000UF-M(YXF)16V
C722	0880033R	CAP.-POLYESTER 0.0015UF-KEB50V	C930	0880194R	CAP.-POLYESTER 0.1UF-J 50V
C723	AN01181F	CAPACITOR 0.56UF 250V METALLIZ POLYPROPYLENE	C931	0800353R	CAP.-ELECTRO.470UF-M 16V
C724	AN01181F	CAPACITOR 0.56UF 250V METALLIZ POLYPROPYLENE	C932	0800353R	CAP.-ELECTRO.470UF-M 16V
C725	0880194R	CAP.-POLYESTER 0.1UF-J 50V	C934	0243503R	CAP.-CERAMIC 150PF-K B 500V
C730	0880194R	CAP.-POLYESTER 0.1UF-J 50V	C935	AL01117S	CAP.ELECTR.1000UF-M(YXF)10V
C731	0880044R	CAP.-POLYESTER 0.01UF-KEB 50V	C936	0800367N	CAP.-ELECTRO. 2200UF-M 16V
C801	0244136R	CAPACITOR-CERAMIC 270PF-KB B 50V	C940	0800319R	CAP.-ELECTRO. 47UF-M 35V
C802	0880044R	CAP.-POLYESTER 0.01UF-KEB 50V	C941	0800319R	CAP.-ELECTRO. 47UF-M 35V
C803	0800279R	CAP.-ELECTORO. 1.0UF-M(SMG) 50V	C942	0800319R	CAP.-ELECTRO. 47UF-M 35V
C804	0299622F	CAPACITOR-POLYPROPYLENE FILM 0.01UF-J 630V	C943	0800319R	CAP.-ELECTRO. 47UF-M 35V
C805	AL00031R	CAP.-ELECTORO. 33UF-M 250V	C944	0800294R	CAP.-ELECTRO. 10UF-M(SMG) 50V
C807	0800352R	CAP.-ELECTRO.470UF 10V	C945	0800294R	CAP.-ELECTRO. 10UF-M(SMG) 50V
C812	AJ00559	CAPACITOT CERAMIC 2200PF2KV	C946	0880194R	CAP.-POLYESTER 0.1UF-J 50V
C813	AL00025R	CAP.ALMI 2.2UF250V	C948	0270425R	CAP.-POLY.1200PF 50V
C814	0880194R	CAP.-POLYESTER 0.1UF-J 50V	C949	0880198R	CAP.-PLOY. 0.22UF-J 50V
C816	0890087R	CAP.-CERAMIC 1000PF-K 50V	C950	0800361N	CAP.-ELECTRO 1000UF 16V
C851	0244119R	CAPACITOR-CERAMIC 390PF-K B 50V	C951	0800361N	CAP.-ELECTRO 1000UF 16V
C852	0880044R	CAP.-POLYESTER 0.01UF-KEB 50V	CA01	0800294R	CAP.-ELECTRO. 10UF-M(SMG) 50V
C853	0800279R	CAP.-ELECTORO. 1.0UF-M(SMG) 50V	CA02	0893215R	CAP 1608CHIP 3300PFKB 50V TAPE
C854	AL00031R	CAP.-ELECTORO. 33UF-M 250V	CA03	0893186R	CERAMIC CAPACITOR(33000PF 16V)
C857	0800352R	CAP.-ELECTRO.470UF 10V	CA04	0800294R	CAP.-ELECTRO. 10UF-M(SMG) 50V
C860	0800294R	CAP.-ELECTRO. 10UF-M(SMG) 50V	CA05	0800294R	CAP.-ELECTRO. 10UF-M(SMG) 50V
C862	AJ00559	CAPACITOT CERAMIC 2200PF2KV	CA06	0893217R	CAP 1608CHIP 4700PFKB 50V TAPE
C863	AL00025R	CAP.ALMI 2.2UF250V	CA07	0893179R	CAP.CHIP-CERAMIC 100000PF 16V TAPE
C864	0880194R	CAP.-POLYESTER 0.1UF-J 50V	CA08	0284638R	CAP.-ELECTRO. 10UF-SME(BP) 16V
C865	0800319R	CAP.-ELECTRO. 47UF-M 35V	CA09	0284623R	CAP.-ELECTRO. 1UF-SME(BP) 50V
C866	0890087R	CAP.-CERAMIC 1000PF-K 50V	CA10	0893179R	CAP.CHIP-CERAMIC 100000PF 16V TAPE
C8A1	0244136R	CAPACITOR-CERAMIC 270PF-KB B 50V	CA11	0800288R	CAP.-ELECTRO. 4.7UF-M(SMG) 50V
C8A2	0880044R	CAP.-POLYESTER 0.01UF-KEB 50V	CA12	0800288R	CAP.-ELECTRO. 4.7UF-M(SMG) 50V
C8A3	0800279R	CAP.-ELECTORO. 1.0UF-M(SMG) 50V	CA13	0893126R	CAP 1608CHIP 100PFJCH 50V TAPE
C8A4	AL00031R	CAP.-ELECTORO. 33UF-M 250V	CA14	0893126R	CAP 1608CHIP 100PFJCH 50V TAPE
C8A7	0800352R	CAP.-ELECTRO.470UF 10V	CA15	0893179R	CAP.CHIP-CERAMIC 100000PF 16V TAPE
C8A8	0880194R	CAP.-POLYESTER 0.1UF-J 50V	CA16	0800326R	CAP.-ELECTRO. 100UF-M 16V
C8C0	0880194R	CAP.-POLYESTER 0.1UF-J 50V	CA17	0800288R	CAP.-ELECTRO. 4.7UF-M(SMG) 50V
C8C1	0800279R	CAP.-ELECTORO. 1.0UF-M(SMG) 50V	CA18	0800288R	CAP.-ELECTRO. 4.7UF-M(SMG) 50V
C8C2	AJ00559	CAPACITOT CERAMIC 2200PF2KV	CA19	0800288R	CAP.-ELECTRO. 4.7UF-M(SMG) 50V
C8C3	AL00025R	CAP.ALMI 2.2UF250V	CA20	0893179R	CAP.CHIP-CERAMIC 100000PF 16V TAPE
C8C4	0890087R	CAP.-CERAMIC 1000PF-K 50V	CA21	0284638R	CAP.-ELECTRO. 10UF-SME(BP) 16V

PRODUCT SERVICE NOTE: Components marked with a ⚠ have special characteristics important to sefety. Before replacing any of these components, read carefully, the PRODUCT SAFETY NOTICE of this Service Manual. Don't degrade the safety of the receiver through improper servicing.

SYMBOL NO.	PART NO.	PART DESCRIPTION	SYMBOL NO.	PART NO.	PART DESCRIPTION
CA22	0893179R	CAP.CHIP-CERAMIC 100000PF 16V TAPE	CC19	0893232R	CAP 1608CHIP 100000PFZF25V TAPE
CA23	0893217R	CAP 1608CHIP 4700PFKB 50V TAPE	CC20	AA01111R	CERAMIC CAPACITOR(1.0UF 6.3V)
CA24	0800294R	CAP.-ELECTRO. 10UF-M(SMG) 50V	CC21	0893214R	CAP 1608CHIP 2700PFKB 50V TAPE
CA25	0800294R	CAP.-ELECTRO. 10UF-M(SMG) 50V	CC22	0893239R	CAP 1608CHIP 10000PFZF 50V TAPE
CA26	0893186R	CERAMIC CAPACITOR(33000PF 16V)	CC23	0893232R	CAP 1608CHIP 100000PFZF25V TAPE
CA27	0893215R	CAP 1608CHIP 3300PFKB 50V TAPE	CC24	0800352R	CAP.-ELECTRO.470UF 10V
CA28	0800294R	CAP.-ELECTRO. 10UF-M(SMG) 50V	CC25	0800294R	CAP.-ELECTRO. 10UF-M(SMG) 50V
CA29	0893179R	CAP.CHIP-CERAMIC 100000PF 16V TAPE	CC26	0893232R	CAP 1608CHIP 100000PFZF25V TAPE
CA30	0893222R	CAP 1608CHIP10000PFKB 50V TAPE	CC27	0893239R	CAP 1608CHIP 10000PFZF 50V TAPE
CA31	0880198R	CAP.-PLOY. 0.22UF-J 50V	CC28	0284634R	CAP.-ELECTRO 4.7UF-SME(BP) 50V
CA32	0893217R	CAP 1608CHIP 4700PFKB 50V TAPE	CC29	0893232R	CAP 1608CHIP 100000PFZF25V TAPE
CA33	0893179R	CAP.CHIP-CERAMIC 100000PF 16V TAPE	CC30	0800294R	CAP.-ELECTRO. 10UF-M(SMG) 50V
CA34	0800279R	CAP.-ELECTORO. 1.0UF-M(SMG) 50V	CC31	0800294R	CAP.-ELECTRO. 10UF-M(SMG) 50V
CA35	0800326R	CAP.-ELECTRO. 100UF-M 16V	CC32	0800326R	CAP.-ELECTRO. 100UF-M 16V
CA36	0893179R	CAP.CHIP-CERAMIC 100000PF 16V TAPE	CC33	0893222R	CAP 1608CHIP10000PFKB 50V TAPE
CA37	0800326R	CAP.-ELECTRO. 100UF-M 16V	CC34	0893222R	CAP 1608CHIP10000PFKB 50V TAPE
CA38	0800294R	CAP.-ELECTRO. 10UF-M(SMG) 50V	CC35	0893222R	CAP 1608CHIP10000PFKB 50V TAPE
CA39	0800294R	CAP.-ELECTRO. 10UF-M(SMG) 50V	CC36	0893232R	CAP 1608CHIP 100000PFZF25V TAPE
CA40	0800294R	CAP.-ELECTRO. 10UF-M(SMG) 50V	CC37	0800326R	CAP.-ELECTRO. 100UF-M 16V
CA41	0800294R	CAP.-ELECTRO. 10UF-M(SMG) 50V	CC38	0893179R	CAP.CHIP-CERAMIC 100000PF 16V TAPE
CA42	0880203R	CAP.-POLYESTER 0.47UF-J 50V	CC39	0893179R	CAP.CHIP-CERAMIC 100000PF 16V TAPE
CA43	0880201R	CAP.-POLYESTER 0.33UF-J 50V	CC40	0893179R	CAP.CHIP-CERAMIC 100000PF 16V TAPE
CA44	0893222R	CAP 1608CHIP10000PFKB 50V TAPE	CC41	0893179R	CAP.CHIP-CERAMIC 100000PF 16V TAPE
CA45	0893186R	CERAMIC CAPACITOR(33000PF 16V)	CC42	0893179R	CAP.CHIP-CERAMIC 100000PF 16V TAPE
CA46	0800294R	CAP.-ELECTRO. 10UF-M(SMG) 50V	CC43	0893179R	CAP.CHIP-CERAMIC 100000PF 16V TAPE
CA47	0800294R	CAP.-ELECTRO. 10UF-M(SMG) 50V	CC45	0893239R	CAP 1608CHIP 10000PFZF 50V TAPE
CA67	0800326R	CAP.-ELECTRO. 100UF-M 16V	CC46	0800326R	CAP.-ELECTRO. 100UF-M 16V
CA68	0284638R	CAP.-ELECTRO. 10UF-SME(BP) 16V	CC47	0893232R	CAP 1608CHIP 100000PFZF25V TAPE
CA69	0800294R	CAP.-ELECTRO. 10UF-M(SMG) 50V	CC50	0893232R	CAP 1608CHIP 100000PFZF25V TAPE
CA70	0800294R	CAP.-ELECTRO. 10UF-M(SMG) 50V	CC51	0800326R	CAP.-ELECTRO. 100UF-M 16V
CA71	0284638R	CAP.-ELECTRO. 10UF-SME(BP) 16V	CC52	0893232R	CAP 1608CHIP 100000PFZF25V TAPE
CA72	0800294R	CAP.-ELECTRO. 10UF-M(SMG) 50V	CC55	0893232R	CAP 1608CHIP 100000PFZF25V TAPE
CA73	0800294R	CAP.-ELECTRO. 10UF-M(SMG) 50V	CC56	0893232R	CAP 1608CHIP 100000PFZF25V TAPE
CA81	0800326R	CAP.-ELECTRO. 100UF-M 16V	CC59	0893232R	CAP 1608CHIP 100000PFZF25V TAPE
CA86	0800326R	CAP.-ELECTRO. 100UF-M 16V	CC60	0893232R	CAP 1608CHIP 100000PFZF25V TAPE
CA88	0893179R	CAP.CHIP-CERAMIC 100000PF 16V TAPE	CC64	0893232R	CAP 1608CHIP 100000PFZF25V TAPE
CAF1	0893135R	CAP 1608CHIP 470PFJCH 50V TAPE	CC65	0893232R	CAP 1608CHIP 100000PFZF25V TAPE
CAF2	0893135R	CAP 1608CHIP 470PFJCH 50V TAPE	CC66	0800326R	CAP.-ELECTRO. 100UF-M 16V
CC01	0893232R	CAP 1608CHIP 100000PFZF25V TAPE	CC67	0893232R	CAP 1608CHIP 100000PFZF25V TAPE
CC02	0893121R	CAP 1608CHIP 39PFJCH 50V TAPE	CC68	0800326R	CAP.-ELECTRO. 100UF-M 16V
CC03	0893232R	CAP 1608CHIP 100000PFZF25V TAPE	CC69	0800326R	CAP.-ELECTRO. 100UF-M 16V
CC04	0800326R	CAP.-ELECTRO. 100UF-M 16V	CC70	0893232R	CAP 1608CHIP 100000PFZF25V TAPE
CC05	0800279R	CAP.-ELECTORO. 1.0UF-M(SMG) 50V	CC71	0800326R	CAP.-ELECTRO. 100UF-M 16V
CC06	0800282R	CAP.-ELECTORO. 2.2UF-M(SMG) 50V	CC72	0800326R	CAP.-ELECTRO. 100UF-M 16V
CC07	0893179R	CAP.CHIP-CERAMIC 100000PF 16V TAPE	CC73	0893232R	CAP 1608CHIP 100000PFZF25V TAPE
CC08	0893179R	CAP.CHIP-CERAMIC 100000PF 16V TAPE	CC74	0800326R	CAP.-ELECTRO. 100UF-M 16V
CC09	0893179R	CAP.CHIP-CERAMIC 100000PF 16V TAPE	CC75	0800326R	CAP.-ELECTRO. 100UF-M 16V
CC10	0893239R	CAP 1608CHIP 10000PFZF 50V TAPE	CC76	0800326R	CAP.-ELECTRO. 100UF-M 16V
CC11	0893232R	CAP 1608CHIP 100000PFZF25V TAPE	CE01	0880044R	CAP.-POLYESTER 0.01UF-KEB 50V
CC12	0893179R	CAP.CHIP-CERAMIC 100000PF 16V TAPE	CE02	0800321R	CAP.-ELECTRO. 47UF-M 50V
CC13	0893179R	CAP.CHIP-CERAMIC 100000PF 16V TAPE	CE03	0880194R	CAP.-POLYESTER 0.1UF-J 50V
CC14	0893179R	CAP.CHIP-CERAMIC 100000PF 16V TAPE	CE04	0890066R	CAP.CERAMIC 27PF-J 50V
CC15	0800282R	CAP.-ELECTORO. 2.2UF-M(SMG) 50V	CE05	0800294R	CAP.-ELECTRO. 10UF-M(SMG) 50V
CC16	0893232R	CAP 1608CHIP 100000PFZF25V TAPE	CE06	0880044R	CAP.-POLYESTER 0.01UF-KEB 50V
CC17	0800352R	CAP.-ELECTRO.470UF 10V	CE07	0890061R	CAP.-CERAMIC 10PF- 50V
CC18	0800361N	CAP.-ELECTRO 1000UF 16V	CE09	0880194R	CAP.-POLYESTER 0.1UF-J 50V

PRODUCT SERVICE NOTE: Components marked with a ⚠ have special characteristics important to sefety. Before replacing any of these components, read carefully, the PRODUCT SAFETY NOTICE of this Service Manual. Don't degrade the safety of the receiver through improper servicing.

SYMBOL NO.	PART NO.	PART DESCRIPTION	SYMBOL NO.	PART NO.	PART DESCRIPTION
CE10	0800321R	CAP.-ELECTRO. 47UF-M 50V	CJ19	0893227R	CERAMIC CAPACITOR(220000PF 16V)
CE13	0244541F	CAPACITOR-CERAMIC 0.01MF-K B 500V	CJ20	0893227R	CERAMIC CAPACITOR(220000PF 16V)
CE14	0244541F	CAPACITOR-CERAMIC 0.01MF-K B 500V	CJ21	0284824F	CAP.-ELECTRO. 2200UF 35V
CE15	0880039R	CAP.-POLYESTER 0.0047UF-KEB50V	CJ22	0893227R	CERAMIC CAPACITOR(220000PF 16V)
CE16	0800294R	CAP.-ELECTRO. 10UF-M(SMG) 50V	CJ23	0893227R	CERAMIC CAPACITOR(220000PF 16V)
CE24	0800294R	CAP.-ELECTRO. 10UF-M(SMG) 50V	CK01	0800335R	CAP.-ELECTRO. 220UF-M(SMG) 16V
CE25	AL00027R	CAP.-ELECTORO. 4.7UF-M 250V	CK03	0800326R	CAP.-ELECTRO. 100UF-M 16V
CE26	AL01166R	CAP.ELECTROLYTIC 100UF-M(YXF)50V	CK04	0880194R	CAP.-POLYESTER 0.1UF-J 50V
CE27	AL01166R	CAP.ELECTROLYTIC 100UF-M(YXF)50V	CK05	0800353R	CAP.-ELECTRO.470UF-M 16V
CE28	0800303R	CAP.-ELECTRO. 22UF-M 50V	CK06	0880194R	CAP.-POLYESTER 0.1UF-J 50V
CE29	0800303R	CAP.-ELECTRO. 22UF-M 50V	CK07	0800326R	CAP.-ELECTRO. 100UF-M 16V
CE30	0247848R	CAP.-CERAMIC 56PF-J SL 500V	CK08	0880194R	CAP.-POLYESTER 0.1UF-J 50V
CE31	0247848R	CAP.-CERAMIC 56PF-J SL 500V	CK09	0880194R	CAP.-POLYESTER 0.1UF-J 50V
CE32	AL00032R	CAP.-ELECTORO. 47UF-M 250V	CK10	0800326R	CAP.-ELECTRO. 100UF-M 16V
CE33	0244541F	CAPACITOR-CERAMIC 0.01MF-K B 500V	CK11	0880035R	CAP.-POLY 2200PF-50V
CF01	0800294R	CAP.-ELECTRO. 10UF-M(SMG) 50V	CK12	0890076R	CAP.CERAMIC 150PF-K 50V
CF02	0255520R	CAP.-ELECTRO 0.47UF 250V(KME)	CK15	0880031R	CAP.-POLY.1000PF-K 50V
CF03	AN01631F	1000PF1500VMETALLIZ POLYPROPYLENE FILM CAPA	CK18	0880044R	CAP.-POLYESTER 0.01UF-KEB 50V
CF04	0880034R	CAP.-POLYESTER 0.0018UF-KEB50V	CK19	0880044R	CAP.-POLYESTER 0.01UF-KEB 50V
CF05	0800294R	CAP.-ELECTRO. 10UF-M(SMG) 50V	CK20	0890076R	CAP.CERAMIC 150PF-K 50V
CF06	0800294R	CAP.-ELECTRO. 10UF-M(SMG) 50V	CK21	0890076R	CAP.CERAMIC 150PF-K 50V
CF18	0245158	CAPACITOT CERAMIC 68PF/2KV	CK22	0890083R	CAP.-CERAMIC 470PF-K 50V
CF19	0245156	CAPACITOT CERAMIC 22PF/2KV	CK23	0890076R	CAP.CERAMIC 150PF-K 50V
CH01	0800326R	CAP.-ELECTRO. 100UF-M 16V	CK24	0890076R	CAP.CERAMIC 150PF-K 50V
CH02	0890078R	CAP.-CERAMIC 220PF-K 50V	CK25	0890076R	CAP.CERAMIC 150PF-K 50V
CH03	0880044R	CAP.-POLYESTER 0.01UF-KEB 50V	CK27	0800356N	CAP.-ELECTRO. 470UF-M 50V
CH05	0800294R	CAP.-ELECTRO. 10UF-M(SMG) 50V	CK28	0800356N	CAP.-ELECTRO. 470UF-M 50V
CH06	0800279R	CAP.-ELECTORO. 1.0UF-M(SMG) 50V	CK29	0890076R	CAP.CERAMIC 150PF-K 50V
CH07	0880033R	CAP.-POLYESTER 0.0015UF-KEB50V	CK30	0890076R	CAP.CERAMIC 150PF-K 50V
CH08	0800326R	CAP.-ELECTRO. 100UF-M 16V	CK31	0890076R	CAP.CERAMIC 150PF-K 50V
CH09	0880198R	CAP.-PLOY. 0.22UF-J 50V	CK32	0890076R	CAP.CERAMIC 150PF-K 50V
CH10	0880194R	CAP.-POLYESTER 0.1UF-J 50V	CK33	0890076R	CAP.CERAMIC 150PF-K 50V
⚠ CH13	AN01639F	2200PF 1500V METALLIZ POLYPROPYLENE FILM CAPA	CK34	0890076R	CAP.CERAMIC 150PF-K 50V
CH14	0279693R	CAP.-POLYESTER FLM 0.1UF	CK36	0800355N	CAP.ELECTRO. 470UF-M 35V
CH15	0880038R	CAP.-POLYESTER 0.0039UF-KEB50V	CK37	0800355N	CAP.ELECTRO. 470UF-M 35V
CH16	AL01724	CAP.ALUMI.160V 390UF KMH(M)	CK43	0880044R	CAP.-POLYESTER 0.01UF-KEB 50V
⚠ CH17	0284623R	CAP.-ELECTRO. 1UF-SME(BP) 50V	CL01	0880053R	CAP.-POLYESTER 0.047UF-KEB 50V (53/61UDX)
CH18	0880198R	CAP.-PLOY. 0.22UF-J 50V	CL02	0880053R	CAP.-POLYESTER 0.047UF-KEB 50V (53/61UDX)
CH19	0284623R	CAP.-ELECTRO. 1UF-SME(BP) 50V	CL07	0880053R	CAP.-POLYESTER 0.047UF-KEB 50V (53/61UDX)
CJ01	0800279R	CAP.-ELECTORO. 1.0UF-M(SMG) 50V	CL08	0880053R	CAP.-POLYESTER 0.047UF-KEB 50V (53/61UDX)
CJ02	0800279R	CAP.-ELECTORO. 1.0UF-M(SMG) 50V	CL09	0800326R	CAP.-ELECTRO. 100UF-M 16V (53/61UDX)
CJ04	0800279R	CAP.-ELECTORO. 1.0UF-M(SMG) 50V	CL10	0880194R	CAP.-POLYESTER 0.1UF-J 50V (53/61UDX)
CJ05	0800279R	CAP.-ELECTORO. 1.0UF-M(SMG) 50V	CM01	0800303R	CAP.-ELECTRO. 22UF-M 50V
CJ06	0893208R	CAP 1608CHIP 1000PFKB 50V TAPE	CM02	0880044R	CAP.-POLYESTER 0.01UF-KEB 50V
CJ07	0893208R	CAP 1608CHIP 1000PFKB 50V TAPE	CM03	0800279R	CAP.-ELECTORO. 1.0UF-M(SMG) 50V
CJ08	AA01111R	CERAMIC CAPACITOR(1.0UF 6.3V)	CM04	0880044R	CAP.-POLYESTER 0.01UF-KEB 50V
CJ09	AA01111R	CERAMIC CAPACITOR(1.0UF 6.3V)	CM05	0880044R	CAP.-POLYESTER 0.01UF-KEB 50V
CJ10	0800318R	CAP.-ELECTRO. 47UF-M 25V	CM06	0880194R	CAP.-POLYESTER 0.1UF-J 50V
CJ11	0800318R	CAP.-ELECTRO. 47UF-M 25V	CM09	0880044R	CAP.-POLYESTER 0.01UF-KEB 50V
CJ12	0880194R	CAP.-POLYESTER 0.1UF-J 50V	CM10	0800294R	CAP.-ELECTRO. 10UF-M(SMG) 50V
CJ13	0893232R	CAP 1608CHIP 100000PFZF25V TAPE	CM11	0800294R	CAP.-ELECTRO. 10UF-M(SMG) 50V
CJ14	0284824F	CAP.-ELECTRO. 2200UF 35V	CM12	0800318R	CAP.-ELECTRO. 47UF-M 25V
CJ15	0800328R	CAP. ELECTRO. 100UF-M 35V	CM14	0880194R	CAP.-POLYESTER 0.1UF-J 50V
CJ16	0800328R	CAP. ELECTRO. 100UF-M 35V	CM15	0880194R	CAP.-POLYESTER 0.1UF-J 50V
CJ17	0800318R	CAP.-ELECTRO. 47UF-M 25V	CM16	0880194R	CAP.-POLYESTER 0.1UF-J 50V
CJ18	0284824F	CAP.-ELECTRO. 2200UF 35V	CN01	0890084R	CAP.-CERAMIC 560PF-K 50V

PRODUCT SERVICE NOTE: Components marked with a ⚠ have special characteristics important to sefety. Before replacing any of these components, read carefully, the PRODUCT SAFETY NOTICE of this Service Manual. Don't degrade the safety of the receiver through improper servicing.

SYMBOL NO.	PART NO.	PART DESCRIPTION	SYMBOL NO.	PART NO.	PART DESCRIPTION
CN02	0880051R	CAP.-POLYESTER 0.033UF-KEB 50V	CX11	AA01101R	CERAMIC CAPACITOR(1UF 10V-F)
CN03	0800288R	CAP.-ELECTRO. 4.7UF-M(SMG) 50V	CX12	AA01101R	CERAMIC CAPACITOR(1UF 10V-F)
CN04	0800279R	CAP.-ELECTORO. 1.0UF-M(SMG) 50V	CX15	AA01101R	CERAMIC CAPACITOR(1UF 10V-F)
CN05	0880035R	CAP.-POLY 2200PF-50V	CX16	AA01101R	CERAMIC CAPACITOR(1UF 10V-F)
CN06	0800326R	CAP.-ELECTRO. 100UF-M 16V	CX17	0800352R	CAP.-ELECTRO.470UF 10V
⚠ CP01	AJ00195F	CAP. CERAMIC CK45-F2EA472ZYNN	CX18	0800294R	CAP.-ELECTRO. 10UF-M(SMG) 50V
⚠ CP02	AJ00195F	CAP. CERAMIC CK45-F2EA472ZYNN	CX19	0800294R	CAP.-ELECTRO. 10UF-M(SMG) 50V
CP03	AL01747	CAP.ALUMI.250V 680UF KMH(M)	CX20	0800352R	CAP.-ELECTRO.470UF 10V
CP04	AL01747	CAP.ALUMI.250V 680UF KMH(M)	CX21	0893239R	CAP 1608CHIP 10000PFZF 50V TAPE
CP05	0800337R	CAP.-ELECTRO 220UF 35V (SMG TY PE)	CX22	AA01111R	CERAMIC CAPACITOR(1.0UF 6.3V)
CP06	0880194R	CAP.-POLYESTER 0.1UF-J 50V	CX23	AA01101R	CERAMIC CAPACITOR(1UF 10V-F)
CP07	0890085R	CAP.-CERAMIC 680PF-K 50V	CX24	AA01111R	CERAMIC CAPACITOR(1.0UF 6.3V)
CP09	0299616F	CAPACITOR-POLYPROPYLENE FILM 0.0033UF-J 630V	CX25	AA01101R	CERAMIC CAPACITOR(1UF 10V-F)
⚠ CP10	AJ00182F	CAP. CERAMIC CD85-E2GA102MYNS	CX26	AA01111R	CERAMIC CAPACITOR(1.0UF 6.3V)
CP11	0880194R	CAP.-POLYESTER 0.1UF-J 50V	CX27	0800294R	CAP.-ELECTRO. 10UF-M(SMG) 50V
CP12	0800352R	CAP.-ELECTRO.470UF 10V	CX28	AA01111R	CERAMIC CAPACITOR(1.0UF 6.3V)
CP13	0243509R	CAP.-CERAMIC 470PF-K 500V	CX29	0800294R	CAP.-ELECTRO. 10UF-M(SMG) 50V
CP14	0244501R	CAP.-CERAMIC 1000PF-K 500V	CX30	AA01101R	CERAMIC CAPACITOR(1UF 10V-F)
CP15	0243511R	CAP.-CERAMIC 680PF-K 500V TAPE	CX31	0893232R	CAP 1608CHIP 100000PFZF25V TAPE
CP16	0244501R	CAP.-CERAMIC 1000PF-K 500V	CX32	0893232R	CAP 1608CHIP 100000PFZF25V TAPE
CP17	0244202R	CAP. CERAMIC DE0907R471K2K	CX33	0800326R	CAP.-ELECTRO. 100UF-M 16V
CP18	0244202R	CAP. CERAMIC DE0907R471K2K	CX34	0893232R	CAP 1608CHIP 100000PFZF25V TAPE
CP19	0880194R	CAP.-POLYESTER 0.1UF-J 50V	CX35	AA01111R	CERAMIC CAPACITOR(1.0UF 6.3V)
CP20	AL01851R	2200UF 16V ALUMINIUM ELECTROLYTIC CAPACITOR	CX36	AA01101R	CERAMIC CAPACITOR(1UF 10V-F)
CP21	0880194R	CAP.-POLYESTER 0.1UF-J 50V	CX37	AA01101R	CERAMIC CAPACITOR(1UF 10V-F)
CP22	AL01851R	2200UF 16V ALUMINIUM ELECTROLYTIC CAPACITOR	CX38	AA01111R	CERAMIC CAPACITOR(1.0UF 6.3V)
CP23	AL01129S	CAP.ELECTROLYTIC 1000UF-M(YXF)16V	CX39	0893239R	CAP 1608CHIP 10000PFZF 50V TAPE
CP24	0243511R	CAP.-CERAMIC 680PF-K 500V TAPE	CX40	0800326R	CAP.-ELECTRO. 100UF-M 16V
CP25	0284405R	CAP.-ELECTRO. 220UF-M 16V	CX41	0893232R	CAP 1608CHIP 100000PFZF25V TAPE
CP26	AL01129S	CAP.ELECTROLYTIC 1000UF-M(YXF)16V	CX42	0893239R	CAP 1608CHIP 10000PFZF 50V TAPE
CP27	AL01129S	CAP.ELECTROLYTIC 1000UF-M(YXF)16V	CX43	0893179R	CAP.CHIP-CERAMIC 100000PF 16V TAPE
CP28	AL01153S	CAP.ELECTR. 1000UF-M 35V	CX44	0893179R	CAP.CHIP-CERAMIC 100000PF 16V TAPE
CP29	AL01153S	CAP.ELECTR. 1000UF-M 35V	CX45	0800326R	CAP.-ELECTRO. 100UF-M 16V
CP30	0800355N	CAP.ELECTRO. 470UF-M 35V	CX46	0893232R	CAP 1608CHIP 100000PFZF25V TAPE
CP31	0800355N	CAP.ELECTRO. 470UF-M 35V	CX47	0800326R	CAP.-ELECTRO. 100UF-M 16V
CP32	AL01723	CAP.ALUMI.160V 330UF KMH(M)	CX48	0893232R	CAP 1608CHIP 100000PFZF25V TAPE
CP33	AL02323	CE-101M251EW(KMX)D16	CX49	0893114R	CAP 1608CHIP 12PFJCH 50V TAPE
CP34	0800319R	CAP.-ELECTRO. 47UF-M 35V	CX50	0800273R	CAP.-ELECTRO 0.22UF-M 50V
CP35	0800279R	CAP.-ELECTORO. 1.0UF-M(SMG) 50V	CX51	0893213R	CAP1608CHIP 2200PFKB 50V TAPE
CP36	0800303R	CAP.-ELECTRO. 22UF-M 50V	CX52	0800282R	CAP.-ELECTORO. 2.2UF-M(SMG) 50V
CP37	0800326R	CAP.-ELECTRO. 100UF-M 16V	CX53	0800282R	CAP.-ELECTORO. 2.2UF-M(SMG) 50V
CP38	0800334R	CAP.-ELECTRO. 220UF 10V	CX54	0893217R	CAP 1608CHIP 4700PFKB 50V TAPE
CP39	AL01129S	CAP.ELECTROLYTIC 1000UF-M(YXF)16V	CX55	0893232R	CAP 1608CHIP 100000PFZF25V TAPE
CP40	0800361N	CAP.-ELECTRO 1000UF 16V	CX56	0800326R	CAP.-ELECTRO. 100UF-M 16V
CP42	AL01117S	CAP.ELECTR.1000UF-M(YXF)10V	CX57	0893232R	CAP 1608CHIP 100000PFZF25V TAPE
CP43	AL01117S	CAP.ELECTR.1000UF-M(YXF)10V	CX58	0893232R	CAP 1608CHIP 100000PFZF25V TAPE
CX01	AA01111R	CERAMIC CAPACITOR(1.0UF 6.3V)	CX59	0800326R	CAP.-ELECTRO. 100UF-M 16V
CX02	AA01101R	CERAMIC CAPACITOR(1UF 10V-F)	CX60	AA01121R	CERAMIC CAPACITOR(0.47UF 10V)
CX03	AA01101R	CERAMIC CAPACITOR(1UF 10V-F)	CX61	AA01121R	CERAMIC CAPACITOR(0.47UF 10V)
CX04	AA01111R	CERAMIC CAPACITOR(1.0UF 6.3V)	CX62	AA01121R	CERAMIC CAPACITOR(0.47UF 10V)
CX05	0893232R	CAP 1608CHIP 100000PFZF25V TAPE	CX63	0893232R	CAP 1608CHIP 100000PFZF25V TAPE
CX06	AA01111R	CERAMIC CAPACITOR(1.0UF 6.3V)	CX64	AA01121R	CERAMIC CAPACITOR(0.47UF 10V)
CX07	AA01101R	CERAMIC CAPACITOR(1UF 10V-F)	CX65	AA01121R	CERAMIC CAPACITOR(0.47UF 10V)
CX08	AA01101R	CERAMIC CAPACITOR(1UF 10V-F)	CX66	AA01121R	CERAMIC CAPACITOR(0.47UF 10V)
CX09	AA01111R	CERAMIC CAPACITOR(1.0UF 6.3V)	CX67	AA01121R	CERAMIC CAPACITOR(0.47UF 10V)
CX10	0893232R	CAP 1608CHIP 100000PFZF25V TAPE	CX68	AA01121R	CERAMIC CAPACITOR(0.47UF 10V)

PRODUCT SERVICE NOTE: Components marked with a ⚠ have special characteristics important to sefety. Before replacing any of these components, read carefully, the PRODUCT SAFETY NOTICE of this Service Manual. Don't degrade the safety of the receiver through improper servicing.

SYMBOL NO.	PART NO.	PART DESCRIPTION	SYMBOL NO.	PART NO.	PART DESCRIPTION
CX69	AA01121R	CERAMIC CAPACITOR(0.47UF 10V)	CY36	0800279R	CAP.-ELECTORO. 1.0UF-M(SMG) 50V
CX70	AA01121R	CERAMIC CAPACITOR(0.47UF 10V)	CY37	AA01121R	CERAMIC CAPACITOR(0.47UF 10V)
CX71	AA01121R	CERAMIC CAPACITOR(0.47UF 10V)	CY38	AA01121R	CERAMIC CAPACITOR(0.47UF 10V)
CX72	AA01121R	CERAMIC CAPACITOR(0.47UF 10V)	CY39	AA01121R	CERAMIC CAPACITOR(0.47UF 10V)
CX73	AA01121R	CERAMIC CAPACITOR(0.47UF 10V)	CY40	AA01121R	CERAMIC CAPACITOR(0.47UF 10V)
CX74	AA01121R	CERAMIC CAPACITOR(0.47UF 10V)	CY41	AA01121R	CERAMIC CAPACITOR(0.47UF 10V)
CX75	0893232R	CAP 1608CHIP 100000PFZF25V TAPE	CY42	AA01121R	CERAMIC CAPACITOR(0.47UF 10V)
CX76	0893119R	CAP 1608CHIP 33PFJCH 50V TAPE	CY43	AA01121R	CERAMIC CAPACITOR(0.47UF 10V)
CX77	0893222R	CAP 1608CHIP10000PFKB 50V TAPE	CY44	AA01121R	CERAMIC CAPACITOR(0.47UF 10V)
CX78	AA01111R	CERAMIC CAPACITOR(1.0UF 6.3V)	CY45	AA01121R	CERAMIC CAPACITOR(0.47UF 10V)
CX79	0893179R	CAP.CHIP-CERAMIC 100000PF 16V TAPE	CY46	AA01121R	CERAMIC CAPACITOR(0.47UF 10V)
CX80	0893232R	CAP 1608CHIP 100000PFZF25V TAPE	CY47	AA01121R	CERAMIC CAPACITOR(0.47UF 10V)
CX81	0800352R	CAP.-ELECTRO.470UF 10V	CY48	AA01121R	CERAMIC CAPACITOR(0.47UF 10V)
CX82	AA01121R	CERAMIC CAPACITOR(0.47UF 10V)	CY49	0800294R	CAP.-ELECTRO. 10UF-M(SMG) 50V
CX83	AA01121R	CERAMIC CAPACITOR(0.47UF 10V)	CY50	0800294R	CAP.-ELECTRO. 10UF-M(SMG) 50V
CX84	AA01121R	CERAMIC CAPACITOR(0.47UF 10V)			
CX85	AA01121R	CERAMIC CAPACITOR(0.47UF 10V)			**DIODES**
CX86	AA01121R	CERAMIC CAPACITOR(0.47UF 10V)	D001	2331849M	ZENER HZ12C3 (TA) SI 500MW
CX87	AA01121R	CERAMIC CAPACITOR(0.47UF 10V)	D002	2331849M	ZENER HZ12C3 (TA) SI 500MW
CX88	AA01121R	CERAMIC CAPACITOR(0.47UF 10V)	D003	2331849M	ZENER HZ12C3 (TA) SI 500MW
CX89	AA01121R	CERAMIC CAPACITOR(0.47UF 10V)	D004	2331849M	ZENER HZ12C3 (TA) SI 500MW
CX90	AA01121R	CERAMIC CAPACITOR(0.47UF 10V)	D005	2331849M	ZENER HZ12C3 (TA) SI 500MW
CX91	AA01121R	CERAMIC CAPACITOR(0.47UF 10V)	D007	CH02021M	DIODE 1SS133 T-72 (53/61UDX)
CX92	AA01121R	CERAMIC CAPACITOR(0.47UF 10V)	D008	CH02021M	DIODE 1SS133 T-72
CX93	AA01121R	CERAMIC CAPACITOR(0.47UF 10V)	D009	CH02021M	DIODE 1SS133 T-72
CX94	AA01121R	CERAMIC CAPACITOR(0.47UF 10V)	D010	2331827M	ZENER DIODE HZ-9 TAPE (C1) SI 500MW 9.3V
CX95	AA01121R	CERAMIC CAPACITOR(0.47UF 10V)	D011	2331827M	ZENER DIODE HZ-9 TAPE (C1) SI 500MW 9.3V
CX96	0893232R	CAP 1608CHIP 100000PFZF25V TAPE	D012	CH02021M	DIODE 1SS133 T-72
CX97	0893119R	CAP 1608CHIP 33PFJCH 50V TAPE	D013	CH02021M	DIODE 1SS133 T-72
CX98	0893222R	CAP 1608CHIP10000PFKB 50V TAPE	D015	2331809M	ZENER DIODE HZ-6 TAPE (C3) SI 500MW
CX99	AA01111R	CERAMIC CAPACITOR(1.0UF 6.3V)	D016	CH02021M	DIODE 1SS133 T-72
CY01	0893179R	CAP.CHIP-CERAMIC 100000PF 16V TAPE	D017	CH02021M	DIODE 1SS133 T-72
CY02	0893232R	CAP 1608CHIP 100000PFZF25V TAPE	D018	CH02021M	DIODE 1SS133 T-72
CY03	0800352R	CAP.-ELECTRO.470UF 10V	D019	CH02021M	DIODE 1SS133 T-72
CY04	0800326R	CAP.-ELECTRO. 100UF-M 16V	D020	CH02021M	DIODE 1SS133 T-72
CY05	0893232R	CAP 1608CHIP 100000PFZF25V TAPE	D021	CH02021M	DIODE 1SS133 T-72
CY06	0893232R	CAP 1608CHIP 100000PFZF25V TAPE	D022	CH02021M	DIODE 1SS133 T-72
CY07	0893232R	CAP 1608CHIP 100000PFZF25V TAPE	D023	CH02021M	DIODE 1SS133 T-72
CY08	0800326R	CAP.-ELECTRO. 100UF-M 16V	D025	CH02021M	DIODE 1SS133 T-72
CY09	0893232R	CAP 1608CHIP 100000PFZF25V TAPE	D026	2331783M	ZENER HZ-4A3 TAPE
CY10	0800326R	CAP.-ELECTRO. 100UF-M 16V	D027	CH02021M	DIODE 1SS133 T-72
CY11	0893232R	CAP 1608CHIP 100000PFZF25V TAPE	D028	CH02021M	DIODE 1SS133 T-72
CY12	0893232R	CAP 1608CHIP 100000PFZF25V TAPE	D029	2331849M	ZENER HZ12C3 (TA) SI 500MW
CY13	0893232R	CAP 1608CHIP 100000PFZF25V TAPE	D030	2331779M	ZENER DIODE HZ3C3
CY14	AA01111R	CERAMIC CAPACITOR(1.0UF 6.3V)	D040	2331849M	ZENER HZ12C3 (TA) SI 500MW
CY17	0893179R	CAP.CHIP-CERAMIC 100000PF 16V TAPE	D501	2339971M	ZENER HZS33-1 TA
CY18	0893232R	CAP 1608CHIP 100000PFZF25V TAPE	D502	2339971M	ZENER HZS33-1 TA
CY20	0893132R	CAP 1608CHIP 270PFJCH 50V TAPE	D503	2331849M	ZENER HZ12C3 (TA) SI 500MW
CY21	0893179R	CAP.CHIP-CERAMIC 100000PF 16V TAPE	D551	CH02021M	DIODE 1SS133 T-72
CY22	0893179R	CAP.CHIP-CERAMIC 100000PF 16V TAPE	D552	CH02021M	DIODE 1SS133 T-72
CY23	AA01101R	CERAMIC CAPACITOR(1UF 10V-F)	D601	2331154M	ZENER HZ-12 (A1-3 B1-3.TA) SI 200MA 14.3V
CY24	0893179R	CAP.CHIP-CERAMIC 100000PF 16V TAPE	D602	CH02021M	DIODE 1SS133 T-72
CY25	0893179R	CAP.CHIP-CERAMIC 100000PF 16V TAPE	D603	CH02001M	DIODE 1SR139-400
CY26	0893179R	CAP.CHIP-CERAMIC 100000PF 16V TAPE	D604	CH02001M	DIODE 1SR139-400
CY27	AA01111R	CERAMIC CAPACITOR(1.0UF 6.3V)	D605	CH02011M	DIODE 1SR153-400
CY35	0893232R	CAP 1608CHIP 100000PFZF25V TAPE	D606	2334305M	ZENER RD30E (B4 T2/TP/TA) SI 5MA 30.51V

PRODUCT SERVICE NOTE: Components marked with a ⚠ have special characteristics important to sefety. Before replacing any of these components, read carefully, the PRODUCT SAFETY NOTICE of this Service Manual. Don't degrade the safety of the receiver through improper servicing.

SYMBOL NO.	PART NO.	PART DESCRIPTION
D607	CH02001M	DIODE 1SR139-400
D608	CH02021M	DIODE 1SS133 T-72
D701	CH02001M	DIODE 1SR139-400
D702	2339859M	ZENER HZS7C3 TA
D703	CH02021M	DIODE 1SS133 T-72
⚠ D706	2339882M	ZENER DIODE HZS-12(A2) TAPE
D707	CH02021M	DIODE 1SS133 T-72
⚠ D708	CH02161	DIODE FMQ-G2FLS (1500V)
D709	CH02021M	DIODE 1SS133 T-72
D710	2339855M	ZENER DIODE HZS-7 (B2) TAPE SI 7V
D711	CH00041M	DIODE ES1FV1 (1500V)
D712	CH00041M	DIODE ES1FV1 (1500V)
D713	2339802M	ZENER DIODE HZS2B2 TAPE
D714	2339849M	ZENER HZS6C3 TA
D801	2331849M	ZENER HZ12C3 (TA) SI 500MW
D802	CH02021M	DIODE 1SS133 T-72
D803	CH02021M	DIODE 1SS133 T-72
D804	CH02021M	DIODE 1SS133 T-72
D806	CH02021M	DIODE 1SS133 T-72
D808	CH02021M	DIODE 1SS133 T-72
D813	CH02001M	DIODE 1SR139-400
D814	CH02001M	DIODE 1SR139-400
D815	CH02001M	DIODE 1SR139-400
D816	CH02001M	DIODE 1SR139-400
D851	2331849M	ZENER HZ12C3 (TA) SI 500MW
D852	CH02021M	DIODE 1SS133 T-72
D853	CH02021M	DIODE 1SS133 T-72
D854	CH02021M	DIODE 1SS133 T-72
D856	CH02021M	DIODE 1SS133 T-72
D858	CH02021M	DIODE 1SS133 T-72
D863	CH02001M	DIODE 1SR139-400
D864	CH02001M	DIODE 1SR139-400
D865	CH02001M	DIODE 1SR139-400
D866	CH02001M	DIODE 1SR139-400
D8A1	2331849M	ZENER HZ12C3 (TA) SI 500MW
D8A2	CH02021M	DIODE 1SS133 T-72
D8A3	CH02021M	DIODE 1SS133 T-72
D8A4	CH02021M	DIODE 1SS133 T-72
D8A5	CH02021M	DIODE 1SS133 T-72
D8A6	CH02021M	DIODE 1SS133 T-72
D8C3	CH02001M	DIODE 1SR139-400
D8C4	CH02001M	DIODE 1SR139-400
D8C5	CH02001M	DIODE 1SR139-400
D8C6	CH02001M	DIODE 1SR139-400
D8C7	2331849M	ZENER HZ12C3 (TA) SI 500MW
⚠ D901	2342061	DIODE D3SB(A)60.
D902	2334304M	ZENER RD30E (B3 T2/TP/TA) SI 5MA 30.51V
D903	CH02011M	DIODE 1SR153-400
D904	CH02011M	DIODE 1SR153-400
D906	CH02001M	DIODE 1SR139-400
D907	CH02001M	DIODE 1SR139-400
D910	2337951G	DIODE RU4Z
D912	CH00182R	LIGHT EMITTING DIODE (SLZ-381C-06-T1)
D914	CH02001M	DIODE 1SR139-400
D919	2338532M	DIODE EG01A (V1)
D920	2334832M	DIODE EK04V1

SYMBOL NO.	PART NO.	PART DESCRIPTION
D923	CH02001M	DIODE 1SR139-400
D924	2339828M	ZENER HZS-4C TAPE
D925	CH02001M	DIODE 1SR139-400
D926	CH02021M	DIODE 1SS133 T-72
D927	CH02021M	DIODE 1SS133 T-72
D933	2339882M	ZENER DIODE HZS-12(A2) TAPE
D934	CH02021M	DIODE 1SS133 T-72
D935	2339857M	ZENER HZS7C1 SI
D936	CH02021M	DIODE 1SS133 T-72
D938	CH02021M	DIODE 1SS133 T-72
D939	2339817M	ZENER HZS3C1 TA
D940	CH02021M	DIODE 1SS133 T-72
D941	2339821M	ZENER HZS4A1 TA
D942	CH02021M	DIODE 1SS133 T-72
D944	2331844M	ZENER HZ12-B1
D947	2339867M	ZENER HZS-9-C1 TAPE (SI.200MA)
DA01	CH02021M	DIODE 1SS133 T-72
DA02	CH02021M	DIODE 1SS133 T-72
DA03	2331771M	ZENER HZ-3A1 TAPE
DA04	2331771M	ZENER HZ-3A1 TAPE
DC01	CH02021M	DIODE 1SS133 T-72
DC02	CH02021M	DIODE 1SS133 T-72
DC03	2339801M	ZENER HZS-2 TAPE (B1) SI 400MW 2.0V
DC04	CH02021M	DIODE 1SS133 T-72
DC05	CH02021M	DIODE 1SS133 T-72
DC06	2331849M	ZENER HZ12C3 (TA) SI 500MW
DC07	2331849M	ZENER HZ12C3 (TA) SI 500MW
DC08	2331849M	ZENER HZ12C3 (TA) SI 500MW
DC09	CH02001M	DIODE 1SR139-400
DC10	CH02001M	DIODE 1SR139-400
DC11	2331849M	ZENER HZ12C3 (TA) SI 500MW
DC12	2331849M	ZENER HZ12C3 (TA) SI 500MW
DE01	2331849M	ZENER HZ12C3 (TA) SI 500MW
DE02	2335042M	ZENER HZ-22 (2L TP) SI 200MA 400MW
DE03	CH02001M	DIODE 1SR139-400
DE04	CH02001M	DIODE 1SR139-400
DE05	CH02001M	DIODE 1SR139-400
DE06	CH02001M	DIODE 1SR139-400
DE17	CH02021M	DIODE 1SS133 T-72
DE18	CH02021M	DIODE 1SS133 T-72
DF01	CH02021M	DIODE 1SS133 T-72
DF02	CH02021M	DIODE 1SS133 T-72
DF03	CH02021M	DIODE 1SS133 T-72
DF04	2338531M	DIODE EG-01C (V) SI 0.5A
DH01	2339802M	ZENER DIODE HZS2B2 TAPE
DH02	2339839M	ZENER HZS5C3 TAPE
DH04	2339839M	ZENER HZS5C3 TAPE
DH05	CH02021M	DIODE 1SS133 T-72
DH06	CH02021M	DIODE 1SS133 T-72
DH08	2334243M	ZENER RD16E (B2 T2/TP/TA) SI 10MA 16.51V
DH09	2337361F	DIODE RU4D LF-20
DH10	CH02001M	DIODE 1SR139-400
DH11	CH02001M	DIODE 1SR139-400
⚠ DH12	CH02021M	DIODE 1SS133 T-72
DH13	CH00031M	DIODE AU02V1(280V)
DH14	2334324M	ZENER DIODE RD36E TAPE (B3) SI 500MW 36V

PRODUCT SERVICE NOTE: Components marked with a ⚠ have special characteristics important to sefety. Before replacing any of these components, read carefully, the PRODUCT SAFETY NOTICE of this Service Manual. Don't degrade the safety of the receiver through improper servicing.

SYMBOL NO.	PART NO.	PART DESCRIPTION
⚠ DH15	2335042M	ZENER HZ-22 (2L TP) SI 200MA 400MW
DH16	2334305M	ZENER RD30E (B4 T2/TP/TA) SI 5MA 30.51V
DH17	CH00031M	DIODE AU02V1(280V)
DJ01	CH02021M	DIODE 1SS133 T-72
DJ02	CH02021M	DIODE 1SS133 T-72
DJ03	CH02021M	DIODE 1SS133 T-72
DJ04	CH02021M	DIODE 1SS133 T-72
DJ05	CH02021M	DIODE 1SS133 T-72
DJ06	CH02021M	DIODE 1SS133 T-72
DJ07	CH02021M	DIODE 1SS133 T-72
DJ08	CH02021M	DIODE 1SS133 T-72
DJ09	CH02021M	DIODE 1SS133 T-72
DJ10	CH02021M	DIODE 1SS133 T-72
DJ22	CH02021M	DIODE 1SS133 T-72
DK01	CH02301M	DIODE D2S4M (2A-40V)
DK04	CH02011M	DIODE 1SR153-400
DK05	CH02011M	DIODE 1SR153-400
DK16	2334324M	ZENER DIODE RD36E TAPE (B3)(53/61UDX)
DK16	2334334M	ZENER RD39E (B3 T2 TP TA) (43FDX)
DK17	2334324M	ZENER DIODE RD36E TAPE (B3) (53/61UDX)
DK17	2334334M	ZENER RD39E (B3 T2 TP TA) (43FDX)
DK18	2334324M	ZENER DIODE RD36E TAPE (B3) (53/61UDX)
DK18	2334334M	ZENER RD39E (B3 T2 TP TA) (43FDX)
DK19	2334324M	ZENER DIODE RD36E TAPE (B3) (53/61UDX)
DK19	2334334M	ZENER RD39E (B3 T2 TP TA) (43FDX)
DK20	2334324M	ZENER DIODE RD36E TAPE (B3) (53/61UDX)
DK20	2334334M	ZENER RD39E (B3 T2 TP TA) (43FDX)
DK21	2334324M	ZENER DIODE RD36E TAPE (B3) (53/61UDX)
DK21	2334334M	ZENER RD39E (B3 T2 TP TA) (43FDX)
DK22	2334324M	ZENER DIODE RD36E TAPE (B3)(53/61UDX)
DK22	2334334M	ZENER RD39E (B3 T2 TP TA) (43FDX)
DK23	2334324M	ZENER DIODE RD36E TAPE(53/61UDX)
DK23	2334334M	ZENER RD39E (B3 T2 TP TA) (43FDX)
DK24	2334324M	ZENER DIODE RD36E TAPE(53/61UDX)
DK24	2334334M	ZENER RD39E (B3 T2 TP TA) (43FDX)
DK25	2334324M	ZENER DIODE RD36E TAPE(53/61UDX)
DK25	2334334M	ZENER RD39E (B3 T2 TP TA) (43FDX)
DK26	2334324M	ZENER DIODE RD36E TAPE(53/61UDX)
DK26	2334334M	ZENER RD39E (B3 T2 TP TA) (43FDX)
DK27	2334324M	ZENER DIODE RD36E TAPE(53/61UDX)
DK27	2334334M	ZENER RD39E (B3 T2 TP TA) (43FDX)
DK30	2331815M	ZENER HZ7-B2 (53/61UDX)
DK31	2331815M	ZENER HZ7-B2 (53/61UDX)
DK36	2331815M	ZENER HZ7-B2 (53/61UDX)
DK37	2331815M	ZENER HZ7-B2 (53/61UDX)
DK39	CH02021M	DIODE 1SS133 T-72
DK41	2331815M	ZENER HZ7-B2
DK42	2331815M	ZENER HZ7-B2
DL01	2331815M	ZENER HZ7-B2 (53/61UDX)
DL02	2331815M	ZENER HZ7-B2 (53/61UDX)
DL07	2331815M	ZENER HZ7-B2 (53/61UDX)
DL08	2331815M	ZENER HZ7-B2 (53/61UDX)
DL10	CH02021M	DIODE 1SS133 T-72 (53/61UDX)
DL11	CH02021M	DIODE 1SS133 T-72 (53/61UDX)
DL16	CH02021M	DIODE 1SS133 T-72 (53/61UDX)
DL17	CH02021M	DIODE 1SS133 T-72 (53/61UDX)
DL20	2331815M	ZENER HZ7-B2 (53/61UDX)
DL21	2331815M	ZENER HZ7-B2 (53/61UDX)
DL26	2331815M	ZENER HZ7-B2 (53/61UDX)
DL27	2331815M	ZENER HZ7-B2 (53/61UDX)
DL28	2331824M	ZENER HZ9B1 TA (53/61UDX)
DL30	2331824M	ZENER HZ9B1 TA (53/61UDX)
DL31	2331824M	ZENER HZ9B1 TA (53/61UDX)
DL36	2331824M	ZENER HZ9B1 TA (53/61UDX)
DL37	2331824M	ZENER HZ9B1 TA (53/61UDX)
DM01	CH02021M	DIODE 1SS133 T-72
DM02	CH02021M	DIODE 1SS133 T-72
DM03	CH00231	LED SLH-56VC3F
DM04	2331849M	ZENER HZ12C3 (TA) SI 500MW
DM05	2331849M	ZENER HZ12C3 (TA) SI 500MW
DM07	2331849M	ZENER HZ12C3 (TA) SI 500MW
DM08	2331849M	ZENER HZ12C3 (TA) SI 500MW
DM09	2331849M	ZENER HZ12C3 (TA) SI 500MW
DM10	2331849M	ZENER HZ12C3 (TA) SI 500MW
DM11	2331849M	ZENER HZ12C3 (TA) SI 500MW
DM12	2331815M	ZENER HZ7-B2
DN01	CH02021M	DIODE 1SS133 T-72
DN02	2339825M	ZENER DIODE HZS-4 TAPE (B2) SI 400MW 3.9V
DN03	CH02021M	DIODE 1SS133 T-72
DN06	CH02021M	DIODE 1SS133 T-72
DN07	CH02021M	DIODE 1SS133 T-72
DN08	CH02021M	DIODE 1SS133 T-72
DN09	CH02021M	DIODE 1SS133 T-72
DN10	CH02021M	DIODE 1SS133 T-72
DN11	CH02021M	DIODE 1SS133 T-72
DN12	2331849M	ZENER HZ12C3 (TA) SI 500MW
DN13	CH02021M	DIODE 1SS133 T-72
⚠ DP01	2342061	DIODE D3SB(A)60.
DP02	CH02011M	DIODE 1SR153-400
DP03	2334324M	ZENER DIODE RD36E TAPE (B3) SI 500MW 36V
DP04	2331844M	ZENER HZ12-B1
DP05	CH02011M	DIODE 1SR153-400
DP06	CH00183R	LIGHT EMITTING DIODE (SLZ-981C-06-T1)
DP07	2337951G	DIODE RU4Z
DP08	2337951G	DIODE RU4Z
DP09	2338532M	DIODE EG01A (V1)
DP10	2334304M	ZENER RD30E (B3 T2/TP/TA) SI 5MA 30.51V
DP11	CH00182R	LIGHT EMITTING DIODE (SLZ-381C-06-T1)
DP12	2337951G	DIODE RU4Z
DP13	2337951G	DIODE RU4Z
DP14	2359312	DIODE RU3C (1000V)
DP15	CH01061F	DIODE RU4AM(600V)
DP16	2339881M	ZENER HZS12A1 TA
DP17	2339857M	ZENER HZS7C1 SI
DP18	2339961M	ZENER HZS30-1 TA
DP19	CH02021M	DIODE 1SS133 T-72
DP20	CH02021M	DIODE 1SS133 T-72
DP21	2339827M	ZENER HZS4C1 TA
DP22	CH02021M	DIODE 1SS133 T-72
DP23	CH00182R	LIGHT EMITTING DIODE (SLZ-381C-06-T1)
DP24	CH02001M	DIODE 1SR139-400
DP25	CH02001M	DIODE 1SR139-400

PRODUCT SERVICE NOTE: Components marked with a ⚠ have special characteristics important to sefety. Before replacing any of these components, read carefully, the PRODUCT SAFETY NOTICE of this Service Manual. Don't degrade the safety of the receiver through improper servicing.

SYMBOL NO.	PART NO.	PART DESCRIPTION
DP26	CH02021M	DIODE 1SS133 T-72
DP27	CH02021M	DIODE 1SS133 T-72
DP28	CH02021M	DIODE 1SS133 T-72
DP29	2339875M	ZENER HZS11B2 TA
DP30	CH02021M	DIODE 1SS133 T-72
DP31	CH02021M	DIODE 1SS133 T-72
DP34	CH02021M	DIODE 1SS133 T-72
DP35	CH00182R	LIGHT EMITTING DIODE (SLZ-381C-06-T1)
DP37	CH00182R	LIGHT EMITTING DIODE (SLZ-381C-06-T1)
DX11	2331771M	ZENER HZ-3A1 TAPE
DX12	2331771M	ZENER HZ-3A1 TAPE
DX13	CH02021M	DIODE 1SS133 T-72
		FUSES
⚠ F901	2722359	FUSE AC06A
⚠ F902	2722354	FUSE 2A
⚠ F903	2974432M	JUMPER WIRE (0.5 L=52MM)
⚠ F905	2974432M	JUMPER WIRE (0.5 L=52MM)
⚠ F907	2974432M	JUMPER WIRE (0.5 L=52MM)
⚠ F909	2974432M	JUMPER WIRE (0.5 L=52MM)
FH01	AZ00101M	PROTECTOR(CRXT491.500)
⚠ FP01	2722358	FUSE AC05A
⚠ FP02	AZ00106M	PROTECTOR CRXT491003
⚠ FP03	AZ00109M	PROTECTOR CRXT491007
⚠ FP04	AZ00421M	PROTECTOR 491010T52
⚠ FP05	AZ00106M	PROTECTOR CRXT491003
⚠ FP07	AZ00108M	PROTECTOR(CRXT491005)
⚠ FP08	AZ00421M	PROTECTOR 491010T52
FP09	AZ00101M	PROTECTOR(CRXT491.500)
		SPARK GAPS
⚠ G801	CJ00071R	SPARK GAP 1.5KV
⚠ G802	CJ00071R	SPARK GAP 1.5KV
⚠ G851	CJ00071R	SPARK GAP 1.5KV
⚠ G852	CJ00071R	SPARK GAP 1.5KV
⚠ G8A1	CJ00071R	SPARK GAP 1.5KV
⚠ G8A2	CJ00071R	SPARK GAP 1.5KV
⚠ GF01	CJ00072R	SPARK GAP 2.5KV
		INTEGRATED CIRCUIT
HM01	CZ00641	GP1U281Q RC RECEIVER
I001	CP07166U	IC MN102H51KHZ MAIN MICRO
I002	CP06941R	IC PST994I RESET IC
I003	CK35894R	IC CAT24WC32J1 EEPROM
I004	CK09541R	IC HD74HCT245T BUFFER
I005	CK31992R	IC BU4053BCF MAIN/PIP SELECTOR
I006	CK31071R	IC CXA1875AM EXTERNAL DAC 1
I007	CK31071R	IC CXA1875AM EXTERNAL DAC 3
I301	CK09013U	IC UPD64082GF-3BA 3DYC SEPARATION IC
I302	CK06097R	IC(PST9127NR) RESET IC
I303	CK35321R	IC MSM514265E-60JS 3DYC MEMORY
I501	CK07923U	IC TA1270BF MAIN/VIDEO CHROMA
I502	CK35501R	IC(NJM2284M-TE1) VIDEO/S-VIDEO SELECTOR
I503	CK01172R	HD74HC221FPEL
I601	CP06891	IC TDA8174A VERT OUPUT
I701	2362606	IC NJM4558D PIN AMP

SYMBOL NO.	PART NO.	PART DESCRIPTION
⚠ I901	CP07821U	ST BY IC STR-G6632 REGULATOR IC
⚠ I902	CP05431	IC (TLP621F D4-GRL) OPTOISOLATOR
⚠ I903	CP05431	IC (TLP621F D4-GRL) OPTOISOLATOR
⚠ I904	CP05431	IC (TLP621F D4-GRL) OPTOISOLATOR
I906	CP05163F	IC SI-3090F ST BY 9V REG IC
IA01	CK35262R	IC NJW1132AM-TE1
IA02	CK35451R	IC NJM2198M
IA07	CK35291R	IC NJM2043M
IC01	CP07281U	IC TA1316AN RGB PROCESSOR IC
IC02	CP07611	IC (NJM7805FA) 5V REG
IC03	CP04232	IC BA033T 3.3V REG
IC04	CP06581U	IC LF25CV 2.5V REG
IH01	CP07091	IC M62501P 14V REG
IJ01	2004751	IC TA8200AH FRONT AUDIO AMP
IK01	CP07611	IC (NJM7805FA) 5V REG
IK02	CP01631R	ICL-PST9142 MUTE IC
IK04	CZ00431	IC (STK392-110) (53/61UDX) CONV OUTPUT
IK04	CZ00432	IC (STK392-120) (43FDX) CONV OUTPUT
IK05	CZ00431	IC (STK392-110) (53/61UDX) CONV OUTPUT
IK05	CZ00432	IC (STK392-120) (43FDX) CONV OUTPUT
⚠ IP01	CZ00865	STR-F6629B(LF1351) 3+ REGULATOR
⚠ IP02	CP05431	IC (TLP621F D4-GRL) OPTOISOLATOR
⚠ IP03	2381343	IC (SE115N) 5+ FEEDBACK
IP04	2004665F	IC PQ09RF2B SW 9.0V REG
IP05	2004666F	IC PQ05RF2B SW 5V REG
IP06	CP05141	IC (PQ6RD083) HEATER 6.3V REG
IX01	CK30941U	IC CXA2069Q A/V SELECTOR
IX02	CW00022	COMB FILTER (337KNT) 2 LINE COMB FILTER
IX03	CK07923U	IC TA1270BF SUB VIDEO CHROMA
IX04	CK35371U	IC CXA2151Q MAIN YPbPr SELECTOR
IX05	CK35371U	IC CXA2151Q SUB YPbPr SELECTOR
IX06	CK31992R	IC BU4053BCF H SYNC SELECTOR
IX07	CK31992R	IC BU4053BCF V SYNC SELECTOR
IX08	2015452R	IC HD74HC04FPEL INVERTER
IX09	CK01172R	HD74HC221FPEL YS PULSE GENERATOR
		COILS
L001	BH00697R	FILTER COIL 100UH
L002	BH00697R	FILTER COIL 100UH
L003	2123781R	FILTER COIL 100UH(EL0607)
L004	BH00697R	FILTER COIL 100UH
L005	BH00697R	FILTER COIL 100UH
L006	BH00697R	FILTER COIL 100UH
L007	BH00697R	FILTER COIL 100UH
L008	BH00697R	FILTER COIL 100UH
L009	BH00697R	FILTER COIL 100UH
L010	BJ00402	30MHZ BAND PASS LC FILTER 87F2
L012	2123415M	LAL AXIAL COIL 2.2UH-K
L013	2123415M	LAL AXIAL COIL 2.2UH-K
L014	2123415M	LAL AXIAL COIL 2.2UH-K
L301	BH00697R	FILTER COIL 100UH
L302	BH00697R	FILTER COIL 100UH
L303	BH00697R	FILTER COIL 100UH
L304	BH00697R	FILTER COIL 100UH
L305	BH00693R	COIL 47UH
L307	BH00697R	FILTER COIL 100UH

PRODUCT SERVICE NOTE: Components marked with a ⚠ have special characteristics important to sefety. Before replacing any of these components, read carefully, the PRODUCT SAFETY NOTICE of this Service Manual. Don't degrade the safety of the receiver through improper servicing.

SYMBOL NO.	PART NO.	PART DESCRIPTION	SYMBOL NO.	PART NO.	PART DESCRIPTION
L308	BH00697R	FILTER COIL 100UH	LE01	2125811F	FILT.COIL(LHL08 100UH)
L309	BH00679R	COIL 4.7UH	LE02	2125811F	FILT.COIL(LHL08 100UH)
L310	BH00691R	COIL 33UH	LE03	BH01341M	COIL FERRITE BEADS 0.8UH
L311	BH00691R	COIL 33UH	LH01	2125814N	FILT.COIL(LHL08 180UH)
L501	2123781R	FILTER COIL 100UH(EL0607)	LH03	BH01341M	COIL FERRITE BEADS 0.8UH
L502	2123781R	FILTER COIL 100UH(EL0607)	LH04	BH01341M	COIL FERRITE BEADS 0.8UH
L503	2123781R	FILTER COIL 100UH(EL0607)	LH05	BH01341M	COIL FERRITE BEADS 0.8UH
L504	2123781R	FILTER COIL 100UH(EL0607)	LH06	2125808N	FILT.COIL(LHL08 68UH)
L505	2123781R	FILTER COIL 100UH(EL0607)	LJ01	BH01341M	COIL FERRITE BEADS 0.8UH
L506	BH01341M	COIL FERRITE BEADS 0.8UH	LJ02	BH01341M	COIL FERRITE BEADS 0.8UH
L507	BH01341M	COIL FERRITE BEADS 0.8UH	LK07	BH01341M	COIL FERRITE BEADS 0.8UH
L508	BH01341M	COIL FERRITE BEADS 0.8UH	LK08	BH01341M	COIL FERRITE BEADS 0.8UH
L551	BH00697R	FILTER COIL 100UH	LK09	BH01342M	COIL FERRITE BEADS 2.3UH
L552	BH00697R	FILTER COIL 100UH	LK10	BH01342M	COIL FERRITE BEADS 2.3UH
L553	BH00697R	FILTER COIL 100UH	LK11	BH01342M	COIL FERRITE BEADS 2.3UH
L554	BH00697R	FILTER COIL 100UH	LK13	BH01342M	COIL FERRITE BEADS 2.3UH
L555	2123107M	LAL02 AXIAL COIL 22UH-K	LK14	2125808N	FILT.COIL(LHL08 68UH)
L601	2125803N	FILT.COIL(LHL08 27UH)	LL01	2125811F	FILT.COIL(LHL08 100UH) (53/61UDX)
L602	2125803N	FILT.COIL(LHL08 27UH)	LP01	BH01342M	COIL FERRITE BEADS 2.3UH
L702	BH00229R	COIL 472K-1T7608A	LP02	BH01342M	COIL FERRITE BEADS 2.3UH
L703	BH00228R	COIL 332K-1T7608A	LP03	BH01341M	COIL FERRITE BEADS 0.8UH
L704	BZ04612	HORIZONTAL LINEARITY COIL 13UH	LP04	BH01341M	COIL FERRITE BEADS 0.8UH
L705	BZ04611	HORIZONTAL LINEARITY COIL 6UH	LP07	2125797N	FILT.COIL(LHL08 10UH)
L801	BH00684R	COIL 10UH	LP10	2125797N	FILT.COIL(LHL08 10UH)
L803	BH00685R	COIL 12UH	LP11	2125811N	FILT.COIL(LHL08 100UH)
L805	BH00673R	COIL 1.5UH	LP12	2125803N	FILT.COIL(LHL08 27UH)
L851	BH00684R	COIL 10UH	LP15	2125806N	FILT.COIL(LHL08 47UH)
L853	BH00685R	COIL 12UH	LP16	2125803N	FILT.COIL(LHL08 27UH)
L855	BH00673R	COIL 1.5UH	LP17	2125806N	FILT.COIL(LHL08 47UH)
L8A1	BH00684R	COIL 10UH	LP18	2125811N	FILT.COIL(LHL08 100UH)
L8A3	BH00685R	COIL 12UH	LP19	2125808N	FILT.COIL(LHL08 68UH)
L8A5	BH00677R	COIL 3.3UH	LP20	2125797N	FILT.COIL(LHL08 10UH)
L8A6	BH00697R	FILTER COIL 100UH	LP22	2125797N	FILT.COIL(LHL08 10UH)
⚠ L901	BZ04581	LINE FILTER 4.7MH 3.5A	LP25	2125808N	FILT.COIL(LHL08 68UH)
⚠ L902	BZ04591	LINE FILTER 1.5MH 3.5A	LX01	BH00697R	FILTER COIL 100UH
⚠ L905	BZ04591	LINE FILTER 1.5MH 3.5A	LX02	BH00697R	FILTER COIL 100UH
L906	BH01342M	COIL FERRITE BEADS 2.3UH	LX03	BH00697R	FILTER COIL 100UH
L907	BH01342M	COIL FERRITE BEADS 2.3UH	LX04	BH00697R	FILTER COIL 100UH
L908	BH01341M	COIL FERRITE BEADS 0.8UH	LX05	BH00697R	FILTER COIL 100UH
L909	BH01341M	COIL FERRITE BEADS 0.8UH	LX06	BH00697R	FILTER COIL 100UH
L910	BH01342M	COIL FERRITE BEADS 2.3UH	LX07	BH00697R	FILTER COIL 100UH
L912	2125797N	FILT.COIL(LHL08 10UH)	LX08	BH00697R	FILTER COIL 100UH
L914	2125797N	FILT.COIL(LHL08 10UH)	LX09	BH00697R	FILTER COIL 100UH
L915	2125797N	FILT.COIL(LHL08 10UH)	LX10	BH00697R	FILTER COIL 100UH
L918	2125808N	FILT.COIL(LHL08 68UH)			
LA01	BH00697R	FILTER COIL 100UH			**TRANSISTORS**
LA02	BH00697R	FILTER COIL 100UH	Q001	2325691R	TRS CHIP 2SC2412K(Q/R TYPE)
LA13	BH00697R	FILTER COIL 100UH	Q002	CA11271R	TRS 2SA1037AK T146 RS
LC01	BH00671R	COIL 1.0UH	Q003	2325691R	TRS CHIP 2SC2412K(Q/R TYPE)
LC02	BH00697R	FILTER COIL 100UH	Q004	2325691R	TRS CHIP 2SC2412K(Q/R TYPE)
LC03	BH00697R	FILTER COIL 100UH	Q005	2325691R	TRS CHIP 2SC2412K(Q/R TYPE)
LC04	BH00697R	FILTER COIL 100UH	Q006	2325691R	TRS CHIP 2SC2412K(Q/R TYPE)
LC05	BH00697R	FILTER COIL 100UH	Q007	2325691R	TRS CHIP 2SC2412K(Q/R TYPE)
LC06	BH00697R	FILTER COIL 100UH	Q008	CA11271R	TRS 2SA1037AK T146 RS
LC07	BH00697R	FILTER COIL 100UH	Q009	CA11271R	TRS 2SA1037AK T146 RS
LC10	BH00697R	FILTER COIL 100UH	Q010	2325691R	TRS CHIP 2SC2412K(Q/R TYPE)

PRODUCT SERVICE NOTE: Components marked with a ⚠ have special characteristics important to sefety. Before replacing any of these components, read carefully, the PRODUCT SAFETY NOTICE of this Service Manual. Don't degrade the safety of the receiver through improper servicing.

SYMBOL NO.	PART NO.	PART DESCRIPTION	SYMBOL NO.	PART NO.	PART DESCRIPTION
Q011	CA11271R	TRS 2SA1037AK T146 RS	Q603	2320591M	TRS. 2SC458 (B TZ/C TZ) SI 230MHZ200MW(53/61UDX)
Q012	CA11271R	TRS 2SA1037AK T146 RS	Q604	2320637M	TRS. 2SA673 (C 26TZ/D 26TZ) SI 80MHZ 400MW
Q013	2325691R	TRS CHIP 2SC2412K(Q/R TYPE)	Q701	2328102	TRS.FN-521
Q014	2325691R	TRS CHIP 2SC2412K(Q/R TYPE)	Q703	2326811R	TRANSISTOR 2SC3468 (E/F)
Q015	CA11271R	TRS 2SA1037AK T146 RS	Q704	2320591M	TRS. 2SC458 (B TZ/C TZ) SI 230MHZ200MW
Q016	2325691R	TRS CHIP 2SC2412K(Q/R TYPE)	Q705	2320591M	TRS. 2SC458 (B TZ/C TZ) SI 230MHZ200MW
Q017	2325691R	TRS CHIP 2SC2412K(Q/R TYPE)	Q706	2320591M	TRS. 2SC458 (B TZ/C TZ) SI 230MHZ200MW
Q018	2320637M	TRS. 2SA673 (C 26TZ/D 26TZ) SI 80MHZ 400MW	Q707	2320591M	TRS. 2SC458 (B TZ/C TZ) SI 230MHZ200MW
Q019	2325691R	TRS CHIP 2SC2412K(Q/R TYPE)	Q708	2320663M	TRS. 2SC1213A (C)
Q020	2325691R	TRS CHIP 2SC2412K(Q/R TYPE)	Q709	2326216	TRS. 2SC3116 (S/T)
Q021	2325691R	TRS CHIP 2SC2412K(Q/R TYPE)	Q710	2320591M	TRS. 2SC458 (B TZ/C TZ) SI 230MHZ200MW(53/61UDX)
Q022	CA11271R	TRS 2SA1037AK T146 RS	⚠ Q777	CF02731F	TRS. 2SC5681
Q023	2325691R	TRS CHIP 2SC2412K(Q/R TYPE)	Q801	2327471F	TRS.2SC3950 (HIT D/E)
Q024	CA11271R	TRS 2SA1037AK T146 RS	Q802	2320591M	TRS. 2SC458 (B TZ/C TZ) SI 230MHZ200MW
Q025	2312171	TRS. 2SC3852	Q803	2312372F	TRS-2SC3942
Q026	2325691R	TRS CHIP 2SC2412K(Q/R TYPE)	Q804	2312773F	TRS-2SA1546(2)M/L
Q301	2325691R	TRS CHIP 2SC2412K(Q/R TYPE)	Q805	2312372F	TRS-2SC3942
Q302	CA11271R	TRS 2SA1037AK T146 RS	Q812	2312372F	TRS-2SC3942
Q303	2325691R	TRS CHIP 2SC2412K(Q/R TYPE)	Q851	2327471F	TRS.2SC3950 (HIT D/E)
Q304	CA11271R	TRS 2SA1037AK T146 RS	Q852	2320591M	TRS. 2SC458 (B TZ/C TZ) SI 230MHZ200MW
Q305	2325691R	TRS CHIP 2SC2412K(Q/R TYPE)	Q853	2312372F	TRS-2SC3942
Q306	CA11271R	TRS 2SA1037AK T146 RS	Q854	2312773F	TRS-2SA1546(2)M/L
Q307	2325691R	TRS CHIP 2SC2412K(Q/R TYPE)	Q855	2312372F	TRS-2SC3942
Q308	CA11271R	TRS 2SA1037AK T146 RS	Q858	2320637M	TRS. 2SA673 (C 26TZ/D 26TZ) SI 80MHZ 400MW
Q309	CA11271R	TRS 2SA1037AK T146 RS	Q859	2320591M	TRS. 2SC458 (B TZ/C TZ) SI 230MHZ200MW
Q310	2325691R	TRS CHIP 2SC2412K(Q/R TYPE)	Q862	2312372F	TRS-2SC3942
Q311	CA11271R	TRS 2SA1037AK T146 RS	Q8A1	2327471F	TRS.2SC3950 (HIT D/E)
Q312	2325691R	TRS CHIP 2SC2412K(Q/R TYPE)	Q8A2	2320591M	TRS. 2SC458 (B TZ/C TZ) SI 230MHZ200MW
Q313	CA11271R	TRS 2SA1037AK T146 RS	Q8A3	2312372F	TRS-2SC3942
Q314	2325691R	TRS CHIP 2SC2412K(Q/R TYPE)	Q8A4	2312773F	TRS-2SA1546(2)M/L
Q315	CA11271R	TRS 2SA1037AK T146 RS	Q8A5	2312372F	TRS-2SC3942
Q316	2325691R	TRS CHIP 2SC2412K(Q/R TYPE)	Q8A6	2320637M	TRS. 2SA673 (C 26TZ/D 26TZ) SI 80MHZ 400MW
Q317	CA11271R	TRS 2SA1037AK T146 RS	Q8A7	2320591M	TRS. 2SC458 (B TZ/C TZ) SI 230MHZ200MW
Q501	2325691R	TRS CHIP 2SC2412K(Q/R TYPE)	Q8C1	2320591M	TRS. 2SC458 (B TZ/C TZ) SI 230MHZ200MW
Q502	2325691R	TRS CHIP 2SC2412K(Q/R TYPE)	Q8C2	2312372F	TRS-2SC3942
Q503	2325691R	TRS CHIP 2SC2412K(Q/R TYPE)	Q901	2320637M	TRS. 2SA673 (C 26TZ/D 26TZ) SI 80MHZ 400MW
Q504	2325691R	TRS CHIP 2SC2412K(Q/R TYPE)	Q902	2320591M	TRS. 2SC458 (B TZ/C TZ) SI 230MHZ200MW
Q505	2325691R	TRS CHIP 2SC2412K(Q/R TYPE)	Q914	2320591M	TRS. 2SC458 (B TZ/C TZ) SI 230MHZ200MW
Q506	2325691R	TRS CHIP 2SC2412K(Q/R TYPE)	Q915	2320637M	TRS. 2SA673 (C 26TZ/D 26TZ) SI 80MHZ 400MW
Q507	2320663M	TRS. 2SC1213A (C)	Q916	2320591M	TRS. 2SC458 (B TZ/C TZ) SI 230MHZ200MW
Q551	CA11271R	TRS 2SA1037AK T146 RS	Q917	2320591M	TRS. 2SC458 (B TZ/C TZ) SI 230MHZ200MW
Q552	CA11271R	TRS 2SA1037AK T146 RS	Q918	2320591M	TRS. 2SC458 (B TZ/C TZ) SI 230MHZ200MW
Q553	CA11271R	TRS 2SA1037AK T146 RS	Q919	2320637M	TRS. 2SA673 (C 26TZ/D 26TZ) SI 80MHZ 400MW
Q554	2325691R	TRS CHIP 2SC2412K(Q/R TYPE)	Q920	2320591M	TRS. 2SC458 (B TZ/C TZ) SI 230MHZ200MW
Q555	2325691R	TRS CHIP 2SC2412K(Q/R TYPE)	QA01	2325691R	TRS CHIP 2SC2412K(Q/R TYPE)
Q556	2325691R	TRS CHIP 2SC2412K(Q/R TYPE)	QA02	CA11271R	TRS 2SA1037AK T146 RS
Q557	2325691R	TRS CHIP 2SC2412K(Q/R TYPE)	QA03	2325691R	TRS CHIP 2SC2412K(Q/R TYPE)
Q558	2325691R	TRS CHIP 2SC2412K(Q/R TYPE)	QA04	CA11271R	TRS 2SA1037AK T146 RS
Q559	2325691R	TRS CHIP 2SC2412K(Q/R TYPE)	QA05	2325691R	TRS CHIP 2SC2412K(Q/R TYPE)
Q560	2325691R	TRS CHIP 2SC2412K(Q/R TYPE)	QA06	2325691R	TRS CHIP 2SC2412K(Q/R TYPE)
Q561	CA11271R	TRS 2SA1037AK T146 RS	QC01	2325691R	TRS CHIP 2SC2412K(Q/R TYPE)
Q562	2325691R	TRS CHIP 2SC2412K(Q/R TYPE)	QC02	2325691R	TRS CHIP 2SC2412K(Q/R TYPE)
Q563	CA11271R	TRS 2SA1037AK T146 RS	QC03	2325691R	TRS CHIP 2SC2412K(Q/R TYPE)
Q564	CA11271R	TRS 2SA1037AK T146 RS	QC04	2325691R	TRS CHIP 2SC2412K(Q/R TYPE)
Q601	2320591M	TRS. 2SC458 (B TZ/C TZ) SI 230MHZ200MW	QC05	2325691R	TRS CHIP 2SC2412K(Q/R TYPE)
Q602	2320591M	TRS. 2SC458 (B TZ/C TZ) SI 230MHZ200MW(53/61UDX)	QC06	2325691R	TRS CHIP 2SC2412K(Q/R TYPE)

PRODUCT SERVICE NOTE: Components marked with a ⚠ have special characteristics important to sefety. Before replacing any of these components, read carefully, the PRODUCT SAFETY NOTICE of this Service Manual. Don't degrade the safety of the receiver through improper servicing.

SYMBOL NO.	PART NO.	PART DESCRIPTION
QC07	2325691R	TRS CHIP 2SC2412K(Q/R TYPE)
QC08	2325691R	TRS CHIP 2SC2412K(Q/R TYPE)
QC09	2325691R	TRS CHIP 2SC2412K(Q/R TYPE)
QC10	2325691R	TRS CHIP 2SC2412K(Q/R TYPE)
QC11	CA11271R	TRS 2SA1037AK T146 RS
QC12	2325691R	TRS CHIP 2SC2412K(Q/R TYPE)
QC13	CA11271R	TRS 2SA1037AK T146 RS
QC14	2325691R	TRS CHIP 2SC2412K(Q/R TYPE)
QC15	2325691R	TRS CHIP 2SC2412K(Q/R TYPE)
QC16	2325691R	TRS CHIP 2SC2412K(Q/R TYPE)
QC17	2325691R	TRS CHIP 2SC2412K(Q/R TYPE)
QC18	2325691R	TRS CHIP 2SC2412K(Q/R TYPE)
QC19	CA11271R	TRS 2SA1037AK T146 RS
QC20	CA11271R	TRS 2SA1037AK T146 RS
QC21	CA11271R	TRS 2SA1037AK T146 RS
QC22	CA11271R	TRS 2SA1037AK T146 RS
QC23	CA11271R	TRS 2SA1037AK T146 RS
QC24	CA11271R	TRS 2SA1037AK T146 RS
QC26	2320663M	TRS. 2SC1213A (C)
QC30	2320637M	TRS. 2SA673 (C 26TZ/D 26TZ) SI 80MHZ 400MW
QC31	CA11271R	TRS 2SA1037AK T146 RS
QC35	2320637M	TRS. 2SA673 (C 26TZ/D 26TZ) SI 80MHZ 400MW
QC36	CA11271R	TRS 2SA1037AK T146 RS
QC40	2320637M	TRS. 2SA673 (C 26TZ/D 26TZ) SI 80MHZ 400MW
QC41	CA11271R	TRS 2SA1037AK T146 RS
QC42	CA11271R	TRS 2SA1037AK T146 RS
QE01	2320591M	TRS. 2SC458 (B TZ/C TZ) SI 230MHZ200MW
QE02	2320591M	TRS. 2SC458 (B TZ/C TZ) SI 230MHZ200MW
QE03	2320591M	TRS. 2SC458 (B TZ/C TZ) SI 230MHZ200MW
QE04	2320591M	TRS. 2SC458 (B TZ/C TZ) SI 230MHZ200MW
QE05	2320591M	TRS. 2SC458 (B TZ/C TZ) SI 230MHZ200MW
QE07	CF01881R	TRS. 2SA1283 E
QE08	CF01871R	TRS. 2SC3243 E
QE10	CF01871R	TRS. 2SC3243 E
QE11	CF01881R	TRS. 2SA1283 E
QE22	2326821R	TRANSISTOR 2SA1371 (E/F)
QE23	2315381	TRS. 2SA1837
QE24	2315381	TRS. 2SA1837
QE25	2315391	TRS. 2SC4793
QE26	2315391	TRS. 2SC4793
QE35	2326811R	TRANSISTOR 2SC3468 (E/F)
QE36	2320591M	TRS. 2SC458 (B TZ/C TZ) SI 230MHZ200MW
QF03	2320663M	TRS. 2SC1213A (C)
QF04	2320637M	TRS. 2SA673 (C 26TZ/D 26TZ) SI 80MHZ 400MW
QF05	2320663M	TRS. 2SC1213A (C)
QF06	CF00821F	TRS. 2SC4686A 1200V
QF07	CF00821F	TRS. 2SC4686A 1200V
QF08	CF00821F	TRS. 2SC4686A 1200V
⚠ QH01	CF02541	TRS GT8Q101
QH02	2320663M	TRS. 2SC1213A (C)
QH03	2326811R	TRANSISTOR 2SC3468 (E/F)
QJ01	CA00461R	TRS.CHIP 2SD2114K 20V TAPE
QJ02	CA00461R	TRS.CHIP 2SD2114K 20V TAPE
QJ03	2325691R	TRS CHIP 2SC2412K(Q/R TYPE)
QJ04	2325691R	TRS CHIP 2SC2412K(Q/R TYPE)
QK01	2312171	TRS. 2SC3852
QK02	2320637M	TRS. 2SA673 (C 26TZ/D 26TZ) SI 80MHZ 400MW
QK03	2320637M	TRS. 2SA673 (C 26TZ/D 26TZ) SI 80MHZ 400MW
QK06	2320591M	TRS. 2SC458 (B TZ/C TZ) SI 230MHZ200MW
QK07	2320591M	TRS. 2SC458 (B TZ/C TZ) SI 230MHZ200MW
QK08	2320591M	TRS. 2SC458 (B TZ/C TZ) SI 230MHZ200MW
QL10	2320637M	TRS. 2SA673 (C 26TZ/D 26TZ)SI 80MHZ 400MW(53/61UDX)
QL11	2320637M	TRS. 2SA673 (C 26TZ/D 26TZ)SI 80MHZ 400MW(53/61UDX)
QL16	2320637M	TRS. 2SA673 (C 26TZ/D 26TZ)SI 80MHZ 400MW(53/61UDX)
QL17	2320637M	TRS. 2SA673 (C 26TZ/D 26TZ)SI 80MHZ 400MW(53/61UDX)
QM01	2320591M	TRS. 2SC458 (B TZ/C TZ) SI 230MHZ200MW
QM02	2312992	PHOTO TRS. RPT-38PT3F (M)
QM03	2320591M	TRS. 2SC458 (B TZ/C TZ) SI 230MHZ200MW
QM04	2320591M	TRS. 2SC458 (B TZ/C TZ) SI 230MHZ200MW
QM05	2320591M	TRS. 2SC458 (B TZ/C TZ) SI 230MHZ200MW
QN01	2320591M	TRS. 2SC458 (B TZ/C TZ) SI 230MHZ200MW
QN02	2320637M	TRS. 2SA673 (C 26TZ/D 26TZ) SI 80MHZ 400MW
QN03	2320591M	TRS. 2SC458 (B TZ/C TZ) SI 230MHZ200MW
QN04	2320591M	TRS. 2SC458 (B TZ/C TZ) SI 230MHZ200MW
QN05	2320591M	TRS. 2SC458 (B TZ/C TZ) SI 230MHZ200MW
QN06	2320591M	TRS. 2SC458 (B TZ/C TZ) SI 230MHZ200MW
QP02	CF02281R	TRS. 2SA821S
QP03	2320637M	TRS. 2SA673 (C 26TZ/D 26TZ) SI 80MHZ 400MW
QX01	2320663M	TRS. 2SC1213A (C)
QX02	2320663M	TRS. 2SC1213A (C)
QX03	2320663M	TRS. 2SC1213A (C)
QX04	2325691R	TRS CHIP 2SC2412K(Q/R TYPE)
QX05	2325691R	TRS CHIP 2SC2412K(Q/R TYPE)
QX06	2325691R	TRS CHIP 2SC2412K(Q/R TYPE)
QX07	2325691R	TRS CHIP 2SC2412K(Q/R TYPE)
QX08	CA11271R	TRS 2SA1037AK T146 RS
QX09	CA11271R	TRS 2SA1037AK T146 RS
QX10	2325691R	TRS CHIP 2SC2412K(Q/R TYPE)
QX11	2325691R	TRS CHIP 2SC2412K(Q/R TYPE)
QX12	2325691R	TRS CHIP 2SC2412K(Q/R TYPE)
QX13	CA11271R	TRS 2SA1037AK T146 RS
QX14	CA11271R	TRS 2SA1037AK T146 RS
QX15	CA11271R	TRS 2SA1037AK T146 RS
QX16	2325691R	TRS CHIP 2SC2412K(Q/R TYPE)
QX17	2325691R	TRS CHIP 2SC2412K(Q/R TYPE)
QX18	CA11271R	TRS 2SA1037AK T146 RS
QX19	CA11271R	TRS 2SA1037AK T146 RS
QX20	CA11271R	TRS 2SA1037AK T146 RS
QX21	CA11271R	TRS 2SA1037AK T146 RS
QX22	CA11271R	TRS 2SA1037AK T146 RS
QX23	CA11271R	TRS 2SA1037AK T146 RS
QX24	CA11271R	TRS 2SA1037AK T146 RS
QX36	2325691R	TRS CHIP 2SC2412K(Q/R TYPE)
QX37	2325691R	TRS CHIP 2SC2412K(Q/R TYPE)
QX40	2325691R	TRS CHIP 2SC2412K(Q/R TYPE)
QX41	2325691R	TRS CHIP 2SC2412K(Q/R TYPE)
		RESISTORS
R001	0790001R	CHIP RESISTOR RECJUMPER-1-16C16T1608
R002	0790051R	RES.CHIP 1/16W 10K OHM
R003	0790044R	RES.CHIP 1/16W 3.3K OHM
R004	0790044R	RES.CHIP 1/16W 3.3K OHM

PRODUCT SERVICE NOTE: Components marked with a ⚠ have special characteristics important to sefety. Before replacing any of these components, read carefully, the PRODUCT SAFETY NOTICE of this Service Manual. Don't degrade the safety of the receiver through improper servicing.

SYMBOL NO.	PART NO.	PART DESCRIPTION	SYMBOL NO.	PART NO.	PART DESCRIPTION
R005	0790037R	RES.CHIP 1/16W 1.0K OHM	R063	0790037R	RES.CHIP 1/16W 1.0K OHM
R006	0790051R	RES.CHIP 1/16W 10K OHM	R064	0790037R	RES.CHIP 1/16W 1.0K OHM
R007	0790051R	RES.CHIP 1/16W 10K OHM	R065	0790037R	RES.CHIP 1/16W 1.0K OHM
R008	0790051R	RES.CHIP 1/16W 10K OHM	R070	0790024R	RES.CHIP 1/16W 100 OHM
R009	0790051R	RES.CHIP 1/16W 10K OHM	R071	0790024R	RES.CHIP 1/16W 100 OHM
R010	0790037R	RES.CHIP 1/16W 1.0K OHM	R072	0790037R	RES.CHIP 1/16W 1.0K OHM
R011	0790037R	RES.CHIP 1/16W 1.0K OHM	R073	0790037R	RES.CHIP 1/16W 1.0K OHM
R012	0790037R	RES.CHIP 1/16W 1.0K OHM	R074	0790024R	RES.CHIP 1/16W 100 OHM
R013	0790037R	RES.CHIP 1/16W 1.0K OHM	R075	0790024R	RES.CHIP 1/16W 100 OHM
R014	0790051R	RES.CHIP 1/16W 10K OHM	R076	0790037R	RES.CHIP 1/16W 1.0K OHM
R015	0790051R	RES.CHIP 1/16W 10K OHM	R077	0790037R	RES.CHIP 1/16W 1.0K OHM
R016	0790051R	RES.CHIP 1/16W 10K OHM	R078	0790037R	RES.CHIP 1/16W 1.0K OHM
R017	0790051R	RES.CHIP 1/16W 10K OHM	R079	0790037R	RES.CHIP 1/16W 1.0K OHM
R018	0790024R	RES.CHIP 1/16W 100 OHM	R080	0790037R	RES.CHIP 1/16W 1.0K OHM
R019	0790024R	RES.CHIP 1/16W 100 OHM	R081	0790024R	RES.CHIP 1/16W 100 OHM
R020	0790024R	RES.CHIP 1/16W 100 OHM	R082	0790024R	RES.CHIP 1/16W 100 OHM
R021	0790024R	RES.CHIP 1/16W 100 OHM	R083	0790024R	RES.CHIP 1/16W 100 OHM
R022	0790037R	RES.CHIP 1/16W 1.0K OHM	R084	0790024R	RES.CHIP 1/16W 100 OHM
R023	0790024R	RES.CHIP 1/16W 100 OHM	R085	0790024R	RES.CHIP 1/16W 100 OHM
R024	0790037R	RES.CHIP 1/16W 1.0K OHM	R086	0790044R	RES.CHIP 1/16W 3.3K OHM
R025	0790051R	RES.CHIP 1/16W 10K OHM	R087	0790037R	RES.CHIP 1/16W 1.0K OHM
R026	0790077R	RES.CHIP 1/16W 1.0M OHM	R088	0790057R	RES.CHIP 1/16W 33K OHM
R027	0790024R	RES.CHIP 1/16W 100 OHM	R089	0790051R	RES.CHIP 1/16W 10K OHM
R028	0790051R	RES.CHIP 1/16W 10K OHM	R091	0790051R	RES.CHIP 1/16W 10K OHM
R029	0790051R	RES.CHIP 1/16W 10K OHM	R092	0790059R	RES.CHIP 1/16W 47K OHM
R030	0790051R	RES.CHIP 1/16W 10K OHM	R093	0790047R	RES.CHIP 1/16W 5.6K OHM
R031	0790037R	RES.CHIP 1/16W 1.0K OHM	R094	0790024R	RES.CHIP 1/16W 100 OHM
R032	0790037R	RES.CHIP 1/16W 1.0K OHM	R095	0790044R	RES.CHIP 1/16W 3.3K OHM
R033	0790037R	RES.CHIP 1/16W 1.0K OHM	R096	0790037R	RES.CHIP 1/16W 1.0K OHM
R034	0790026R	RES.CHIP 1/16W 150 OHM	R097	0790057R	RES.CHIP 1/16W 33K OHM
R035	0790044R	RES.CHIP 1/16W 3.3K OHM	R098	0790051R	RES.CHIP 1/16W 10K OHM
R036	0790037R	RES.CHIP 1/16W 1.0K OHM	R0A0	0790037R	RES.CHIP 1/16W 1.0K OHM
R038	0790034R	RES.CHIP 1/16W 560 OHM	R0A1	0790037R	RES.CHIP 1/16W 1.0K OHM
R039	0790034R	RES.CHIP 1/16W 560 OHM	R0A2	0790037R	RES.CHIP 1/16W 1.0K OHM
R040	0790038R	RES.CHIP 1/16W 1.2K OHM	R0A3	0790038R	RES.CHIP 1/16W 1.2K OHM
R041	0790024R	RES.CHIP 1/16W 100 OHM	R0A4	0790051R	RES.CHIP 1/16W 10K OHM
R042	0790027R	RES.CHIP 1/16W 180 OHM	R0A6	0790031R	RES.CHIP 1/16W 330 OHM
R043	0790027R	RES.CHIP 1/16W 180 OHM	R0A7	0790037R	RES.CHIP 1/16W 1.0K OHM
R044	0790027R	RES.CHIP 1/16W 180 OHM	R0A8	0790001R	CHIP RESISTOR RECJUMPER-1-16C16T1608
R045	0790051R	RES.CHIP 1/16W 10K OHM	R0A9	0790001R	CHIP RESISTOR RECJUMPER-1-16C16T1608
R046	0790023R	RES.CHIP 1/16W 82 OHM	R0C0	0790001R	CHIP RESISTOR RECJUMPER-1-16C16T1608
R047	0790023R	RES.CHIP 1/16W 82 OHM	R0C1	0790001R	CHIP RESISTOR RECJUMPER-1-16C16T1608
R048	0790023R	RES.CHIP 1/16W 82 OHM	R0C3	0790051R	RES.CHIP 1/16W 10K OHM
R049	0790037R	RES.CHIP 1/16W 1.0K OHM	R0C4	0790001R	CHIP RESISTOR RECJUMPER-1-16C16T1608
R050	0790059R	RES.CHIP 1/16W 47K OHM	R0C7	0790024R	RES.CHIP 1/16W 100 OHM
R051	0790051R	RES.CHIP 1/16W 10K OHM	R0C8	0790037R	RES.CHIP 1/16W 1.0K OHM
R052	0790037R	RES.CHIP 1/16W 1.0K OHM	R0C9	0790064R	RES.CHIP 1/16W 100K OHM
R053	0790051R	RES.CHIP 1/16W 10K OHM	R0E1	0790047R	RES.CHIP 1/16W 5.6K OHM
R055	0790047R	RES.CHIP 1/16W 5.6K OHM	R0E2	0790069R	RES.CHIP 1/16W 270K OHM
R056	0790047R	RES.CHIP 1/16W 5.6K OHM	R0E4	0790037R	RES.CHIP 1/16W 1.0K OHM
R057	0790059R	RES.CHIP 1/16W 47K OHM	R0E5	0790051R	RES.CHIP 1/16W 10K OHM
R058	0790051R	RES.CHIP 1/16W 10K OHM	R0E6	0790051R	RES.CHIP 1/16W 10K OHM
R059	0790039R	RES.CHIP 1/16W 1.5K OHM	R100	0790051R	RES.CHIP 1/16W 10K OHM
R060	0790064R	RES.CHIP 1/16W 100K OHM	R101	0790059R	RES.CHIP 1/16W 47K OHM
R061	0790052R	RES.CHIP 1/16W 12K OHM	R102	0790047R	RES.CHIP 1/16W 5.6K OHM
R062	0790047R	RES.CHIP 1/16W 5.6K OHM	R103	0790024R	RES.CHIP 1/16W 100 OHM

PRODUCT SERVICE NOTE: Components marked with a ⚠ have special characteristics important to sefety. Before replacing any of these components, read carefully, the PRODUCT SAFETY NOTICE of this Service Manual. Don't degrade the safety of the receiver through improper servicing.

SYMBOL NO.	PART NO.	PART DESCRIPTION	SYMBOL NO.	PART NO.	PART DESCRIPTION
R104	0790043R	RES.CHIP 1/16W 2.7K OHM	R164	0790037R	RES.CHIP 1/16W 1.0K OHM
R105	0790001R	CHIP RESISTOR RECJUMPER-1-16C16T1608	R165	0790024R	RES.CHIP 1/16W 100 OHM
R106	0790024R	RES.CHIP 1/16W 100 OHM	R166	0790024R	RES.CHIP 1/16W 100 OHM
R107	0790043R	RES.CHIP 1/16W 2.7K OHM	R167	0790037R	RES.CHIP 1/16W 1.0K OHM
R108	0790001R	CHIP RESISTOR RECJUMPER-1-16C16T1608	R168	0790047R	RES.CHIP 1/16W 5.6K OHM
R109	0790024R	RES.CHIP 1/16W 100 OHM	R169	0790024R	RES.CHIP 1/16W 100 OHM
R110	0790024R	RES.CHIP 1/16W 100 OHM	R170	0790024R	RES.CHIP 1/16W 100 OHM
R111	0790001R	CHIP RESISTOR RECJUMPER-1-16C16T1608	R171	0790051R	RES.CHIP 1/16W 10K OHM
R112	0790024R	RES.CHIP 1/16W 100 OHM	R172	0790051R	RES.CHIP 1/16W 10K OHM
R113	0790051R	RES.CHIP 1/16W 10K OHM	R173	0790024R	RES.CHIP 1/16W 100 OHM
R114	0790037R	RES.CHIP 1/16W 1.0K OHM	R174	0790024R	RES.CHIP 1/16W 100 OHM
R115	0790042R	RES.CHIP 1/16W 2.2K OHM	R175	0790051R	RES.CHIP 1/16W 10K OHM
R116	0790051R	RES.CHIP 1/16W 10K OHM	R176	0790051R	RES.CHIP 1/16W 10K OHM
R117	0790059R	RES.CHIP 1/16W 47K OHM	R177	0790001R	CHIP RESISTOR RECJUMPER-1-16C16T1608
R118	0790037R	RES.CHIP 1/16W 1.0K OHM	R178	0790055R	RES.CHIP 1/16W 22K OHM
R119	0790001R	CHIP RESISTOR RECJUMPER-1-16C16T1608	R179	0790024R	RES.CHIP 1/16W 100 OHM
R120	0790024R	RES.CHIP 1/16W 100 OHM	R180	0790064R	RES.CHIP 1/16W 100K OHM
R121	0790024R	RES.CHIP 1/16W 100 OHM	R181	0790055R	RES.CHIP 1/16W 22K OHM
R122	0790024R	RES.CHIP 1/16W 100 OHM	R182	0790046R	RES.CHIP 1/16W 4.7K OHM
R123	0790024R	RES.CHIP 1/16W 100 OHM	R183	0790027R	RES.CHIP 1/16W 180 OHM
R124	0790024R	RES.CHIP 1/16W 100 OHM	R184	0790063R	RES.CHIP 1/16W 82K OHM
R125	0790024R	RES.CHIP 1/16W 100 OHM	R185	0790061R	RES.CHIP 1/16W 56K OHM
R126	0790024R	RES.CHIP 1/16W 100 OHM	R186	0790051R	RES.CHIP 1/16W 10K OHM
R127	0790024R	RES.CHIP 1/16W 100 OHM	R187	0790037R	RES.CHIP 1/16W 1.0K OHM
R128	0790024R	RES.CHIP 1/16W 100 OHM	R188	0790051R	RES.CHIP 1/16W 10K OHM
R129	0790024R	RES.CHIP 1/16W 100 OHM	R189	0790055R	RES.CHIP 1/16W 22K OHM
R130	0790024R	RES.CHIP 1/16W 100 OHM	R190	0790001R	CHIP RESISTOR RECJUMPER-1-16C16T1608
R131	0790024R	RES.CHIP 1/16W 100 OHM	R191	AT03875M	2.2KOHM 1/2W RDS50 CARBON FILM RESISTOR
R132	0790024R	RES.CHIP 1/16W 100 OHM	R192	0790046R	RES.CHIP 1/16W 4.7K OHM
R133	0790024R	RES.CHIP 1/16W 100 OHM	R193	0790052R	RES.CHIP 1/16W 12K OHM
R134	0790037R	RES.CHIP 1/16W 1.0K OHM	R194	0790059R	RES.CHIP 1/16W 47K OHM
R135	0790024R	RES.CHIP 1/16W 100 OHM	R195	0790037R	RES.CHIP 1/16W 1.0K OHM
R136	0790048R	RES.CHIP 1/16W 6.8K OHM	R196	0790037R	RES.CHIP 1/16W 1.0K OHM
R137	0790001R	CHIP RESISTOR RECJUMPER-1-16C16T1608	R197	0790061R	RES.CHIP 1/16W 56K OHM
R138	0790001R	CHIP RESISTOR RECJUMPER-1-16C16T1608	R198	0790051R	RES.CHIP 1/16W 10K OHM
R139	0790057R	RES.CHIP 1/16W 33K OHM	R199	0790053R	RES.CHIP 1/16W 15K OHM
R141	0790037R	RES.CHIP 1/16W 1.0K OHM	R1A4	0790024R	RES.CHIP 1/16W 100 OHM
R142	0790037R	RES.CHIP 1/16W 1.0K OHM	R1A5	0790051R	RES.CHIP 1/16W 10K OHM
R143	0790037R	RES.CHIP 1/16W 1.0K OHM	R1A6	0790021R	RES.CHIP 1/16W 56 OHM
R144	0790051R	RES.CHIP 1/16W 10K OHM	R1A7	0790051R	RES.CHIP 1/16W 10K OHM
R145	0790051R	RES.CHIP 1/16W 10K OHM	R1A8	0790055R	RES.CHIP 1/16W 22K OHM
R146	0790039R	RES.CHIP 1/16W 1.5K OHM	R1A9	0790001R	CHIP RESISTOR RECJUMPER-1-16C16T1608
R147	0790039R	RES.CHIP 1/16W 1.5K OHM	R1C0	0790001R	CHIP RESISTOR RECJUMPER-1-16C16T1608
R148	0790039R	RES.CHIP 1/16W 1.5K OHM	R301	0790001R	CHIP RESISTOR RECJUMPER-1-16C16T1608
R149	0790039R	RES.CHIP 1/16W 1.5K OHM	R302	0790028R	RES.CHIP 1/16W 220 OHM
R150	0790039R	RES.CHIP 1/16W 1.5K OHM	R303	0790068R	RES.CHIP 1/16W 220K OHM
R151	0790037R	RES.CHIP 1/16W 1.0K OHM	R304	0790059R	RES.CHIP 1/16W 47K OHM
R152	0790037R	RES.CHIP 1/16W 1.0K OHM	R305	0790037R	RES.CHIP 1/16W 1.0K OHM
R153	0790037R	RES.CHIP 1/16W 1.0K OHM	R306	0790042R	RES.CHIP 1/16W 2.2K OHM
R154	0790037R	RES.CHIP 1/16W 1.0K OHM	R307	0790033R	RES.CHIP 1/16W 470 OHM
R155	0790037R	RES.CHIP 1/16W 1.0K OHM	R308	0790046R	RES.CHIP 1/16W 4.7K OHM
R159	0790051R	RES.CHIP 1/16W 10K OHM	R309	0790001R	CHIP RESISTOR RECJUMPER-1-16C16T1608
R160	0790037R	RES.CHIP 1/16W 1.0K OHM	R310	0790019R	RES.CHIP 1/16W 47 OHM
R161	0790037R	RES.CHIP 1/16W 1.0K OHM	R311	0790024R	RES.CHIP 1/16W 100 OHM
R162	0790037R	RES.CHIP 1/16W 1.0K OHM	R312	0790024R	RES.CHIP 1/16W 100 OHM
R163	0790037R	RES.CHIP 1/16W 1.0K OHM	R313	0790041R	RES.CHIP 1/16W 1.8K OHM

PRODUCT SERVICE NOTE: Components marked with a ⚠ have special characteristics important to sefety. Before replacing any of these components, read carefully, the PRODUCT SAFETY NOTICE of this Service Manual. Don't degrade the safety of the receiver through improper servicing.

SYMBOL NO.	PART NO.	PART DESCRIPTION	SYMBOL NO.	PART NO.	PART DESCRIPTION
R314	0790051R	RES.CHIP 1/16W 10K OHM	R509	0790037R	RES.CHIP 1/16W 1.0K OHM
R315	0790042R	RES.CHIP 1/16W 2.2K OHM	R510	0790037R	RES.CHIP 1/16W 1.0K OHM
R316	0790061R	RES.CHIP 1/16W 56K OHM	R511	0790037R	RES.CHIP 1/16W 1.0K OHM
R317	0790037R	RES.CHIP 1/16W 1.0K OHM	R512	0790037R	RES.CHIP 1/16W 1.0K OHM
R318	0790036R	RES.CHIP 1/16W 820 OHM	R513	0790024R	RES.CHIP 1/16W 100 OHM
R319	0790027R	RES.CHIP 1/16W 180 OHM	R514	0790024R	RES.CHIP 1/16W 100 OHM
R320	0790037R	RES.CHIP 1/16W 1.0K OHM	R516	0790024R	RES.CHIP 1/16W 100 OHM
R321	0790034R	RES.CHIP 1/16W 560 OHM	R518	0790042R	RES.CHIP 1/16W 2.2K OHM
R322	0790024R	RES.CHIP 1/16W 100 OHM	R519	0790037R	RES.CHIP 1/16W 1.0K OHM
R323	0790064R	RES.CHIP 1/16W 100K OHM	R521	0790037R	RES.CHIP 1/16W 1.0K OHM
R324	0790065R	RES.CHIP 1/16W 120K OHM	R522	0790028R	RES.CHIP 1/16W 220 OHM
R325	0790001R	CHIP RESISTOR RECJUMPER-1-16C16T1608	R523	0790028R	RES.CHIP 1/16W 220 OHM
R326	0790064R	RES.CHIP 1/16W 100K OHM	R524	0790001R	CHIP RESISTOR RECJUMPER-1-16C16T1608
R327	0790047R	RES.CHIP 1/16W 5.6K OHM	R525	0790037R	RES.CHIP 1/16W 1.0K OHM
R328	0790032R	RES.CHIP 1/16W 390 OHM	R527	0790024R	RES.CHIP 1/16W 100 OHM
R329	0790037R	RES.CHIP 1/16W 1.0K OHM	R529	0790042R	RES.CHIP 1/16W 2.2K OHM
R331	0790033R	RES.CHIP 1/16W 470 OHM	R532	0790028R	RES.CHIP 1/16W 220 OHM
R332	0790001R	CHIP RESISTOR RECJUMPER-1-16C16T1608	R533	0790028R	RES.CHIP 1/16W 220 OHM
R333	0790019R	RES.CHIP 1/16W 47 OHM	R534	0790001R	CHIP RESISTOR RECJUMPER-1-16C16T1608
R334	0790019R	RES.CHIP 1/16W 47 OHM	R535	0790024R	RES.CHIP 1/16W 100 OHM
R335	0790011R	RES.CHIP 1/16W 10 OHM	R536	0790051R	RES.CHIP 1/16W 10K OHM
R336	0790042R	RES.CHIP 1/16W 2.2K OHM	R537	0790059R	RES.CHIP 1/16W 47K OHM
R337	0790037R	RES.CHIP 1/16W 1.0K OHM	R538	0790055R	RES.CHIP 1/16W 22K OHM
R338	0790037R	RES.CHIP 1/16W 1.0K OHM	R539	0790037R	RES.CHIP 1/16W 1.0K OHM
R339	0790058R	RES.CHIP 1/16W 39K OHM	R540	0790037R	RES.CHIP 1/16W 1.0K OHM
R340	0790051R	RES.CHIP 1/16W 10K OHM	R541	0790037R	RES.CHIP 1/16W 1.0K OHM
R341	0790024R	RES.CHIP 1/16W 100 OHM	R542	0790037R	RES.CHIP 1/16W 1.0K OHM
R342	0790034R	RES.CHIP 1/16W 560 OHM	R551	0790051R	RES.CHIP 1/16W 10K OHM
R343	0790037R	RES.CHIP 1/16W 1.0K OHM	R552	0790051R	RES.CHIP 1/16W 10K OHM
R344	0790044R	RES.CHIP 1/16W 3.3K OHM	R553	0790024R	RES.CHIP 1/16W 100 OHM
R346	0790024R	RES.CHIP 1/16W 100 OHM	R554	0790024R	RES.CHIP 1/16W 100 OHM
R347	0790037R	RES.CHIP 1/16W 1.0K OHM	R558	0790042R	RES.CHIP 1/16W 2.2K OHM
R348	0790001R	CHIP RESISTOR RECJUMPER-1-16C16T1608	R559	0790042R	RES.CHIP 1/16W 2.2K OHM
R349	0790001R	CHIP RESISTOR RECJUMPER-1-16C16T1608	R560	0790042R	RES.CHIP 1/16W 2.2K OHM
R350	0790011R	RES.CHIP 1/16W 10 OHM	R562	0790001R	CHIP RESISTOR RECJUMPER-1-16C16T1608
R351	0790042R	RES.CHIP 1/16W 2.2K OHM	R563	0196104R	RES 1608 CHIP 1/16W 30KJ TAPE
R352	AQ00194R	RES.CHIP 1/16W 1.0K OHM TAPE	R564	0196079R	RES.-1608CHIP 1/16W 3.0K-J TAPE
R353	AQ00194R	RES.CHIP 1/16W 1.0K OHM TAPE	R565	0196056R	RES.-1608CHIP 1/16W 360-J TAPE
R354	0790051R	RES.CHIP 1/16W 10K OHM	R566	0790037R	RES.CHIP 1/16W 1.0K OHM
R355	0790058R	RES.CHIP 1/16W 39K OHM	R567	0790037R	RES.CHIP 1/16W 1.0K OHM
R356	0790024R	RES.CHIP 1/16W 100 OHM	R568	0790042R	RES.CHIP 1/16W 2.2K OHM
R357	AQ00187R	RES.CHIP 1/16W 560 OHM TAPE	R569	0790045R	RES.CHIP 1/16W 3.9K OHM
R358	0790037R	RES.CHIP 1/16W 1.0K OHM	R570	0790024R	RES.CHIP 1/16W 100 OHM
R359	AQ00205R	RES.CHIP 1/16W 2.7K OHM TAPE	R571	0790024R	RES.CHIP 1/16W 100 OHM
R361	0790024R	RES.CHIP 1/16W 100 OHM	R572	AQ00185R	RES.CHIP 1/16W 470 OHM TAPE
R362	0790037R	RES.CHIP 1/16W 1.0K OHM	R573	AQ00176R	RES.CHIP 1/16W 220 OHM TAPE
R363	0790001R	CHIP RESISTOR RECJUMPER-1-16C16T1608	R574	AQ00176R	RES.CHIP 1/16W 220 OHM TAPE
R364	0790001R	CHIP RESISTOR RECJUMPER-1-16C16T1608	R575	0790024R	RES.CHIP 1/16W 100 OHM
R365	0790024R	RES.CHIP 1/16W 100 OHM	R576	0790049R	RES.CHIP 1/16W 8.2K OHM
R366	0790039R	RES.CHIP 1/16W 1.5K OHM	R577	0790054R	RES.CHIP 1/16W 18K OHM
R501	0790037R	RES.CHIP 1/16W 1.0K OHM	R578	0790024R	RES.CHIP 1/16W 100 OHM
R502	0790037R	RES.CHIP 1/16W 1.0K OHM	R579	0790037R	RES.CHIP 1/16W 1.0K OHM
R503	0790051R	RES.CHIP 1/16W 10K OHM	R580	0790024R	RES.CHIP 1/16W 100 OHM
R504	0790051R	RES.CHIP 1/16W 10K OHM	R581	0790053R	RES.CHIP 1/16W 15K OHM
R507	0790051R	RES.CHIP 1/16W 10K OHM	R582	0790052R	RES.CHIP 1/16W 12K OHM
R508	0790051R	RES.CHIP 1/16W 10K OHM	R583	0790034R	RES.CHIP 1/16W 560 OHM

PRODUCT SERVICE NOTE: Components marked with a ⚠ have special characteristics important to sefety. Before replacing any of these components, read carefully, the PRODUCT SAFETY NOTICE of this Service Manual. Don't degrade the safety of the receiver through improper servicing.

SYMBOL NO.	PART NO.	PART DESCRIPTION	SYMBOL NO.	PART NO.	PART DESCRIPTION
R584	0790032R	RES.CHIP 1/16W 390 OHM	R632	0700041M	RES.-CARBON FLM 1/16W 1.0K-JB
R585	0790033R	RES.CHIP 1/16W 470 OHM	R633	0700045M	RES.-CARBON FLM 1/16W 2.2K-JB
R586	0790024R	RES.CHIP 1/16W 100 OHM	R634	0700063M	RES.-CARBON FLM 1/16W 47K-JB
R588	0790059R	RES.CHIP 1/16W 47K OHM	R635	0700063M	RES.-CARBON FLM 1/16W 47K-JB (53/61UDX)
R589	0790058R	RES.CHIP 1/16W 39K OHM	R701	0100111M	RES.-CARBON FLM 1/8W 82K-JB
R590	0790059R	RES.CHIP 1/16W 47K OHM	R702	0100113M	RES.-CARBON FLM 1/8W 100K-JB
R591	0790046R	RES.CHIP 1/16W 4.7K OHM	R703	0700054M	RES.-CARBON FLM 1/16W 10K-JB
R592	0790024R	RES.CHIP 1/16W 100 OHM	R704	AT03857M	100OHM 1/2W RDS50 CARBON FILM RESISTOR
R593	0790059R	RES.CHIP 1/16W 47K OHM	R706	AT03877M	3.3KOHM 1/2W RDS50 CARBON FILM RESISTOR
R594	0790058R	RES.CHIP 1/16W 39K OHM	R707	AT03877M	3.3KOHM 1/2W RDS50 CARBON FILM RESISTOR
R595	0790059R	RES.CHIP 1/16W 47K OHM	R708	0700067M	RES.-CARBON FLM 1/16W 100K-JB
R596	0790046R	RES.CHIP 1/16W 4.7K OHM	R709	0700062M	RES.-CARBON FLM 1/16W 39K-JB
R597	0790024R	RES.CHIP 1/16W 100 OHM	R710	0700045M	RES.-CARBON FLM 1/16W 2.2K-JB
R598	0790001R	CHIP RESISTOR RECJUMPER-1-16C16T1608	R711	AW00123	TRIMMER RESISTOR
R5A1	0790001R	CHIP RESISTOR RECJUMPER-1-16C16T1608	R712	0700055M	RES.-CARBON FLM 1/16W 12K-JB
R5A6	0790051R	RES.CHIP 1/16W 10K OHM	R713	0700049M	RES.-CARBON FLM 1/16W 4.7K-JB
R5A7	0790051R	RES.CHIP 1/16W 10K OHM	R714	0700037M	RES.-CARBON FLM 1/16W 560-JB
R5C0	0790055R	RES.CHIP 1/16W 22K OHM	R715	0700063M	RES.-CARBON FLM 1/16W 47K-JB (53/61UDX)
R5C1	0790001R	CHIP RESISTOR RECJUMPER-1-16C16T1608	R717	0700052M	RES.-CARBON FLM 1/16W 6.8K-JB
R5C2	0790037R	RES.CHIP 1/16W 1.0K OHM	R718	0700062M	RES.-CARBON FLM 1/16W 39K-JB
R5C4	0790037R	RES.CHIP 1/16W 1.0K OHM	R719	0700062M	RES.-CARBON FLM 1/16W 39K-JB
R5C5	0790024R	RES.CHIP 1/16W 100 OHM	R720	0700049M	RES.-CARBON FLM 1/16W 4.7K-JB
R5C6	0790024R	RES.CHIP 1/16W 100 OHM	R721	0700054M	RES.-CARBON FLM 1/16W 10K-JB
R5C7	0790024R	RES.CHIP 1/16W 100 OHM	R722	0700032M	RES.-CARBON FLM 1/16W 220-JB
R5C8	0790042R	RES.CHIP 1/16W 2.2K OHM	R723	AT03862M	220OHM 1/2W RDS50 CARBON FILM RESISTOR
R5C9	0790044R	RES.CHIP 1/16W 3.3K OHM	R724	0700055M	RES.-CARBON FLM 1/16W 12K-JB
R5E0	0790044R	RES.CHIP 1/16W 3.3K OHM	R725	0100085M	RES.-CARBON FLM 1/8W 6.8K-JB
R5E1	0790059R	RES.CHIP 1/16W 47K OHM	R727	AT03874M	1.8KOHM 1/2W RDS50 CARBON FILM RESISTOR
R5E2	0790059R	RES.CHIP 1/16W 47K OHM	R728	AT03882M	6.8KOHM 1/2W RDS50 CARBON FILM RESISTOR
R602	0700027M	RES.-CARBON FLM 1/16W 100-JB	R729	AT03562S	METAL OX. 100OHM 3W
R603	0700063M	RES.-CARBON FLM 1/16W 47K-JB	R730	AT03422S	METAL OX. 560OHM 2W
R604	0187108M	RES.-CARBON FLM 1/16W 62K-JB	R731	AT01532S	METAL FILM RESISTOR(0.12OHM 1/2W)
R605	0700054M	RES.-CARBON FLM 1/16W 10K-JB	R732	AT03844M	10.0OHM 1/2W RDS50 CARBON FILM RESISTOR
R606	0700047M	RES.-CARBON FLM 1/16W 3.3K-JB	R733	0700046M	RES.-CARBON FLM 1/16W 2.7K-JB
R607	AW00129	TRIMMER RESISTOR	R734	0700045M	RES.-CARBON FLM 1/16W 2.2K-JB
R608	0700067M	RES.-CARBON FLM 1/16W 100K-JB	R735	0700034M	RES.-CARBON FLM 1/16W 330-JB
R609	AT03911M	1MOHM 1/2W RDS50 CARBON FILM (53/61UDX)	R736	0700037M	RES.-CARBON FLM 1/16W 560-JB
R610	AT03911M	1MOHM 1/2W RDS50 CARBON FILM (53/61UDX)	R737	AT03869M	820OHM 1/2W RDS50 CARBON FILM RESISTOR
R611	AT03911M	1MOHM 1/2W RDS50 CARBON FILM (53/61UDX)	R738	AT03588S	METAL OX. 1.0KOHM 3W
R612	0700063M	RES.-CARBON FLM 1/16W 47K-JB (53/61UDX)	R739	AT03251S	METAL OX. 220OHM 1W
R613	0100053M	RES.-CARBON FLM 1/8W 330-JB	R740	AT03251S	METAL OX. 220OHM 1W
R614	0100053M	RES.-CARBON FLM 1/8W 330-JB	R742	0700052M	RES.-CARBON FLM 1/16W 6.8K-JB
R615	0700032M	RES.-CARBON FLM 1/16W 220-JB	R743	0700063M	RES.-CARBON FLM 1/16W 47K-JB
R616	0700053M	RES.-CARBON FLM 1/16W 8.2K-JB	R744	0700055M	RES.-CARBON FLM 1/16W 12K-JB
R618	0700063M	RES.-CARBON FLM 1/16W 47K-JB	R745	0700056M	RES.-CARBON FLM 1/16W 15K-JB
R619	AT03191S	METAL OX. 1.2OHM 1W	R747	0700054M	RES.-CARBON FLM 1/16W 10K-JB
R620	AT03191S	METAL OX. 1.2OHM 1W	R748	AT03422S	METAL OX. 560OHM 2W
R621	0100045M	RES.-CARBON FLM 1/8W 150-JB	R751	0700059M	RES.-CARBON FLM 1/16W 27K-JB
R622	0188095M	RES.-CARBON FLM 1/2W 2.2-J	R752	0700064M	RES.-CARBON FLM 1/16W 56K-JB
R625	AT03242S	METAL OX. 100OHM 1W	R802	0100041M	RES.-CARBON FLM 1/8W 100-JB
R626	AT03857M	100OHM 1/2W RDS50 CARBON FILM RESISTOR	R803	0100047M	RES.-CARBON FLM 1/8W 180-JB
R627	AT03857M	100OHM 1/2W RDS50 CARBON FILM RESISTOR	R804	0100017M	RES.-CARBON FLM 1/8W 10-JB
R628	AT03857M	100OHM 1/2W RDS50 CARBON FILM RESISTOR	R805	0100037M	RES.-CARBON FLM 1/8W 68-JB
R629	AT03184S	METAL OX. 0.68OHM 1W	R806	0119559M	RES.-MTL FLM 1/8W 10-FB
R630	0700054M	RES.-CARBON FLM 1/16W 10K-JB	R807	AT03867M	560OHM 1/2W RDS50 CARBON FILM RESISTOR
R631	0700059M	RES.-CARBON FLM 1/16W 27K-JB	R808	0100113M	RES.-CARBON FLM 1/8W 100K-JB

PRODUCT SERVICE NOTE: Components marked with a ⚠ have special characteristics important to sefety. Before replacing any of these components, read carefully, the PRODUCT SAFETY NOTICE of this Service Manual. Don't degrade the safety of the receiver through improper servicing.

SYMBOL NO.	PART NO.	PART DESCRIPTION	SYMBOL NO.	PART NO.	PART DESCRIPTION
R809	0100069M	RES.-CARBON FLM 1/8W 1.5K-JB	R8F2	0100077M	RES.-CARBON FLM 1/8W 3.3K-JB
R811	0144067	RS99J3Y122JF	⚠ R901	AT03672M	RES.MTL GRAZD FLM 1/2W 3.3M
R812	0144067	RS99J3Y122JF	R902	0147802	RES.-WIRE WOUND 15W 0.62-KM
R813	0100035M	RES.-CARBON FLM 1/8W 56-JB	R903	AT03888M	22KOHM 1/2W RDS50 CARBON FILM RESISTOR
R814	0100035M	RES.-CARBON FLM 1/8W 56-JB	R904	AT03888M	22KOHM 1/2W RDS50 CARBON FILM RESISTOR
R815	AT03857M	100OHM 1/2W RDS50 CARBON FILM RESISTOR	R905	AT03905M	390KOHM 1/2W RDS50 CARBON FILM RESISTOR
R816	AT03906M	470KOHM 1/2W RDS50 CARBON FILM RESISTOR	R906	0100037M	RES.-CARBON FLM 1/8W 68-JB
R817	AT03902M	220KOHM 1/2W RDS50 CARBON FILM RESISTOR	R907	AT03844M	10.0OHM 1/2W RDS50 CARBON FILM RESISTOR
R818	AT03902M	220KOHM 1/2W RDS50 CARBON FILM RESISTOR	R908	0100073M	RES.-CARBON FLM 1/8W 2.2K-JB
R830	0100049M	RES.-CARBON FLM 1/8W 220-JB	R909	0700038M	RES.-CARBON FLM 1/16W 680-JB
R831	0100075M	RES.-CARBON FLM 1/8W 2.7K-JB	R910	AT03186S	METAL OX. 0.82OHM 1W
R832	0100077M	RES.-CARBON FLM 1/8W 3.3K-JB	R911	AT03186S	METAL OX. 0.82OHM 1W
R852	0100041M	RES.-CARBON FLM 1/8W 100-JB	R912	AT03186S	METAL OX. 0.82OHM 1W
R853	0100047M	RES.-CARBON FLM 1/8W 180-JB	R913	0700036M	RES.-CARBON FLM 1/16W 470-JB
R854	0100017M	RES.-CARBON FLM 1/8W 10-JB	⚠ R914	AT03665M	RES.MTL GRAZD FLM 1/2W 1M
R855	0100033M	RES.-CARBON FLM 1/8W 47-JB	R917	0700056M	RES.-CARBON FLM 1/16W 15K-JB
R856	0119559M	RES.-MTL FLM 1/8W 10-FB	R918	0700049M	RES.-CARBON FLM 1/16W 4.7K-JB
R857	AT03867M	560OHM 1/2W RDS50 CARBON FILM RESISTOR	R920	AT03897M	100KOHM 1/2W RDS50 CARBON FILM RESISTOR
R858	0100113M	RES.-CARBON FLM 1/8W 100K-JB	R922	0100033M	RES.-CARBON FLM 1/8W 47-JB
R859	0100069M	RES.-CARBON FLM 1/8W 1.5K-JB	R923	0700054M	RES.-CARBON FLM 1/16W 10K-JB
R861	0144067	RS99J3Y122JF	R925	0700058M	RES.-CARBON FLM 1/16W 22K-JB
R862	0144067	RS99J3Y122JF	⚠ R930	AT03676M	RES.MTL GRAZD FLM 1/2W 6.8M
R863	0100035M	RES.-CARBON FLM 1/8W 56-JB	⚠ R931	0147060	RES.-WIRE WOUND 2W 33-K
R864	0100035M	RES.-CARBON FLM 1/8W 56-JB	R932	AT03886M	15KOHM 1/2W RDS50 CARBON FILM RESISTOR
R865	AT03857M	100OHM 1/2W RDS50 CARBON FILM RESISTOR	R944	0700023M	RES.-CARBON FLM 1/16W 47-J
R866	AT03906M	470KOHM 1/2W RDS50 CARBON FILM RESISTOR	R947	0700031M	RES.-CARBON FLM 1/16W 180-JB
R867	0100069M	RES.-CARBON FLM 1/8W 1.5K-JB	R948	0700049M	RES.-CARBON FLM 1/16W 4.7K-JB
R868	AT03863M	270OHM 1/2W RDS50 CARBON FILM RESISTOR	R949	0700041M	RES.-CARBON FLM 1/16W 1.0K-JB
R869	AT03858M	120OHM 1/2W RDS50 CARBON FILM RESISTOR	R951	0700041M	RES.-CARBON FLM 1/16W 1.0K-JB
R870	AT03858M	120OHM 1/2W RDS50 CARBON FILM RESISTOR	R952	0700063M	RES.-CARBON FLM 1/16W 47K-JB
R873	0100059M	RES.-CARBON FLM 1/8W 560-JB	R954	0700032M	RES.-CARBON FLM 1/16W 220-JB
R880	0100049M	RES.-CARBON FLM 1/8W 220-JB	R955	0700054M	RES.-CARBON FLM 1/16W 10K-JB
R881	0100075M	RES.-CARBON FLM 1/8W 2.7K-JB	R956	0700049M	RES.-CARBON FLM 1/16W 4.7K-JB
R882	0100077M	RES.-CARBON FLM 1/8W 3.3K-JB	R957	0700058M	RES.-CARBON FLM 1/16W 22K-JB
R8A2	0100041M	RES.-CARBON FLM 1/8W 100-JB	R958	0700027M	RES.-CARBON FLM 1/16W 100-JB
R8A3	0100047M	RES.-CARBON FLM 1/8W 180-JB	R959	0700054M	RES.-CARBON FLM 1/16W 10K-JB
R8A4	0100017M	RES.-CARBON FLM 1/8W 10-JB	⚠ R960	0700036M	RES.-CARBON FLM 1/16W 470-JB
R8A5	0100037M	RES.-CARBON FLM 1/8W 68-JB	R961	0700041M	RES.-CARBON FLM 1/16W 1.0K-JB
R8A6	0119559M	RES.-MTL FLM 1/8W 10-FB	R962	0700054M	RES.-CARBON FLM 1/16W 10K-JB
R8A7	AT03867M	560OHM 1/2W RDS50 CARBON FILM RESISTOR	R964	0700041M	RES.-CARBON FLM 1/16W 1.0K-JB
R8A8	0100113M	RES.-CARBON FLM 1/8W 100K-JB	R965	0700041M	RES.-CARBON FLM 1/16W 1.0K-JB
R8A9	0100069M	RES.-CARBON FLM 1/8W 1.5K-JB	R967	0700041M	RES.-CARBON FLM 1/16W 1.0K-JB
R8C1	0144067	RS99J3Y122JF	R968	AT03266S	METAL OX. 820OHM 1W
R8C2	0144067	RS99J3Y122JF	R969	0700032M	RES.-CARBON FLM 1/16W 220-JB
R8C3	0100035M	RES.-CARBON FLM 1/8W 56-JB	R970	0700055M	RES.-CARBON FLM 1/16W 12K-JB
R8C4	0100035M	RES.-CARBON FLM 1/8W 56-JB	R971	AT03553S	METAL OX. 47.0OHM 3W
R8C5	AT03857M	100OHM 1/2W RDS50 CARBON FILM RESISTOR	R972	0700041M	RES.-CARBON FLM 1/16W 1.0K-JB
R8C6	AT03906M	470KOHM 1/2W RDS50 CARBON FILM RESISTOR	R973	0700041M	RES.-CARBON FLM 1/16W 1.0K-JB
R8E3	0100089M	RES.-CARBON FLM 1/8W 10K-JB	RA01	0790024R	RES.CHIP 1/16W 100 OHM
R8E4	0100105M	RES.-CARBON FLM 1/8W 47K-JB	RA02	0790024R	RES.CHIP 1/16W 100 OHM
R8E5	0100037M	RES.-CARBON FLM 1/8W 68-JB	RA03	0790051R	RES.CHIP 1/16W 10K OHM
R8E6	0100067M	RES.-CARBON FLM 1/8W 1.2K-JB	RA04	0790051R	RES.CHIP 1/16W 10K OHM
R8E7	0100087M	RES.-CARBON FLM 1/8W 8.2K-JB	RA05	0790048R	RES.CHIP 1/16W 6.8K OHM
R8E8	0100083M	RES.-CARBON FLM 1/8W 5.6K-JB	RA32	0790058R	RES.CHIP 1/16W 39K OHM
R8F0	0100049M	RES.-CARBON FLM 1/8W 220-JB	RA33	0790024R	RES.CHIP 1/16W 100 OHM
R8F1	0100075M	RES.-CARBON FLM 1/8W 2.7K-JB	RA34	0790052R	RES.CHIP 1/16W 12K OHM

PRODUCT SERVICE NOTE: Components marked with a ⚠ have special characteristics important to sefety. Before replacing any of these components, read carefully, the PRODUCT SAFETY NOTICE of this Service Manual. Don't degrade the safety of the receiver through improper servicing.

SYMBOL NO.	PART NO.	PART DESCRIPTION	SYMBOL NO.	PART NO.	PART DESCRIPTION
RA35	0790037R	RES.CHIP 1/16W 1.0K OHM	RC19	0790042R	RES.CHIP 1/16W 2.2K OHM
RA36	0790037R	RES.CHIP 1/16W 1.0K OHM	RC20	0790042R	RES.CHIP 1/16W 2.2K OHM
RA37	0790031R	RES.CHIP 1/16W 330 OHM	RC21	0790042R	RES.CHIP 1/16W 2.2K OHM
RA38	0790028R	RES.CHIP 1/16W 220 OHM	RC22	0790042R	RES.CHIP 1/16W 2.2K OHM
RA39	0790063R	RES.CHIP 1/16W 82K OHM	RC23	0790042R	RES.CHIP 1/16W 2.2K OHM
RA40	0790037R	RES.CHIP 1/16W 1.0K OHM	RC24	0790042R	RES.CHIP 1/16W 2.2K OHM
RA41	0790064R	RES.CHIP 1/16W 100K OHM	RC26	0790024R	RES.CHIP 1/16W 100 OHM
RA42	0790058R	RES.CHIP 1/16W 39K OHM	RC27	0790024R	RES.CHIP 1/16W 100 OHM
RA43	0790024R	RES.CHIP 1/16W 100 OHM	RC28	0790024R	RES.CHIP 1/16W 100 OHM
RA44	0790052R	RES.CHIP 1/16W 12K OHM	RC29	0790024R	RES.CHIP 1/16W 100 OHM
RA45	0790037R	RES.CHIP 1/16W 1.0K OHM	RC30	0790024R	RES.CHIP 1/16W 100 OHM
RA46	0790037R	RES.CHIP 1/16W 1.0K OHM	RC31	0196087R	RES.-1608CHIP 1/16W 6.2K-J TAPE
RA47	0790031R	RES.CHIP 1/16W 330 OHM	RC32	0790055R	RES.CHIP 1/16W 22K OHM
RA48	0790028R	RES.CHIP 1/16W 220 OHM	RC33	0790051R	RES.CHIP 1/16W 10K OHM
RA49	0790063R	RES.CHIP 1/16W 82K OHM	RC34	0196056R	RES.-1608CHIP 1/16W 360-J TAPE
RA50	0790037R	RES.CHIP 1/16W 1.0K OHM	RC35	0790037R	RES.CHIP 1/16W 1.0K OHM
RA51	0790064R	RES.CHIP 1/16W 100K OHM	RC36	0790037R	RES.CHIP 1/16W 1.0K OHM
RA52	0790037R	RES.CHIP 1/16W 1.0K OHM	RC37	0790037R	RES.CHIP 1/16W 1.0K OHM
RA53	0790037R	RES.CHIP 1/16W 1.0K OHM	RC38	0790039R	RES.CHIP 1/16W 1.5K OHM
RA63	0790059R	RES.CHIP 1/16W 47K OHM	RC39	0790037R	RES.CHIP 1/16W 1.0K OHM
RA67	0790001R	CHIP RESISTOR RECJUMPER-1-16C16T1608	RC40	0790039R	RES.CHIP 1/16W 1.5K OHM
RA68	0790059R	RES.CHIP 1/16W 47K OHM	RC41	0790037R	RES.CHIP 1/16W 1.0K OHM
RA69	0790059R	RES.CHIP 1/16W 47K OHM	RC42	0790051R	RES.CHIP 1/16W 10K OHM
RA70	0790061R	RES.CHIP 1/16W 56K OHM	RC43	0790051R	RES.CHIP 1/16W 10K OHM
RA77	0790037R	RES.CHIP 1/16W 1.0K OHM	RC44	0790037R	RES.CHIP 1/16W 1.0K OHM
RA78	0790037R	RES.CHIP 1/16W 1.0K OHM	RC45	0790037R	RES.CHIP 1/16W 1.0K OHM
RA79	0790001R	CHIP RESISTOR RECJUMPER-1-16C16T1608	RC46	0790024R	RES.CHIP 1/16W 100 OHM
RA80	0790059R	RES.CHIP 1/16W 47K OHM	RC47	0790049R	RES.CHIP 1/16W 8.2K OHM
RA81	0790001R	CHIP RESISTOR RECJUMPER-1-16C16T1608	RC48	0790043R	RES.CHIP 1/16W 2.7K OHM
RA82	0790059R	RES.CHIP 1/16W 47K OHM	RC49	0790037R	RES.CHIP 1/16W 1.0K OHM
RA83	0790064R	RES.CHIP 1/16W 100K OHM	RC50	0790037R	RES.CHIP 1/16W 1.0K OHM
RA84	0790064R	RES.CHIP 1/16W 100K OHM	RC51	0790051R	RES.CHIP 1/16W 10K OHM
RAC3	0790001R	CHIP RESISTOR RECJUMPER-1-16C16T1608	RC52	0790051R	RES.CHIP 1/16W 10K OHM
RAE7	0790001R	CHIP RESISTOR RECJUMPER-1-16C16T1608	RC53	0790037R	RES.CHIP 1/16W 1.0K OHM
RAE8	0790028R	RES.CHIP 1/16W 220 OHM	RC54	0790037R	RES.CHIP 1/16W 1.0K OHM
RAE9	0790028R	RES.CHIP 1/16W 220 OHM	RC55	0790044R	RES.CHIP 1/16W 3.3K OHM
RAF9	0790001R	CHIP RESISTOR RECJUMPER-1-16C16T1608	RC56	0790051R	RES.CHIP 1/16W 10K OHM
RAH1	0790001R	CHIP RESISTOR RECJUMPER-1-16C16T1608	RC57	0790051R	RES.CHIP 1/16W 10K OHM
RC01	0790024R	RES.CHIP 1/16W 100 OHM	RC58	0790038R	RES.CHIP 1/16W 1.2K OHM
RC02	0790024R	RES.CHIP 1/16W 100 OHM	RC59	0790045R	RES.CHIP 1/16W 3.9K OHM
RC03	0790024R	RES.CHIP 1/16W 100 OHM	RC60	0790001R	CHIP RESISTOR RECJUMPER-1-16C16T1608
RC04	0790028R	RES.CHIP 1/16W 220 OHM	RC61	0790037R	RES.CHIP 1/16W 1.0K OHM
RC05	0790034R	RES.CHIP 1/16W 560 OHM	RC62	0790056R	RES.CHIP 1/16W 27K OHM
RC06	0790034R	RES.CHIP 1/16W 560 OHM	RC63	0790024R	RES.CHIP 1/16W 100 OHM
RC07	0790021R	RES.CHIP 1/16W 56 OHM	RC64	0790024R	RES.CHIP 1/16W 100 OHM
RC08	0790021R	RES.CHIP 1/16W 56 OHM	RC65	0790024R	RES.CHIP 1/16W 100 OHM
RC09	0790021R	RES.CHIP 1/16W 56 OHM	RC66	0790037R	RES.CHIP 1/16W 1.0K OHM
RC10	0790024R	RES.CHIP 1/16W 100 OHM	RC67	0790043R	RES.CHIP 1/16W 2.7K OHM
RC11	0790024R	RES.CHIP 1/16W 100 OHM	RC68	0790043R	RES.CHIP 1/16W 2.7K OHM
RC12	0790024R	RES.CHIP 1/16W 100 OHM	RC69	0790043R	RES.CHIP 1/16W 2.7K OHM
RC13	0790039R	RES.CHIP 1/16W 1.5K OHM	RC70	0790024R	RES.CHIP 1/16W 100 OHM
RC14	0790039R	RES.CHIP 1/16W 1.5K OHM	RC71	0790024R	RES.CHIP 1/16W 100 OHM
RC15	0790039R	RES.CHIP 1/16W 1.5K OHM	RC72	0790024R	RES.CHIP 1/16W 100 OHM
RC16	0790042R	RES.CHIP 1/16W 2.2K OHM	RC73	0790043R	RES.CHIP 1/16W 2.7K OHM
RC17	0790042R	RES.CHIP 1/16W 2.2K OHM	RC74	0790043R	RES.CHIP 1/16W 2.7K OHM
RC18	0790042R	RES.CHIP 1/16W 2.2K OHM	RC75	0790043R	RES.CHIP 1/16W 2.7K OHM

PRODUCT SERVICE NOTE: Components marked with a ⚠ have special characteristics important to sefety. Before replacing any of these components, read carefully, the PRODUCT SAFETY NOTICE of this Service Manual. Don't degrade the safety of the receiver through improper servicing.

SYMBOL NO.	PART NO.	PART DESCRIPTION
RC76	0790029R	RES.CHIP 1/16W 270 OHM
RC77	0790029R	RES.CHIP 1/16W 270 OHM
RC78	0790029R	RES.CHIP 1/16W 270 OHM
RC79	0790037R	RES.CHIP 1/16W 1.0K OHM
RC80	0790037R	RES.CHIP 1/16W 1.0K OHM
RC81	0790037R	RES.CHIP 1/16W 1.0K OHM
RC82	0790024R	RES.CHIP 1/16W 100 OHM
RC83	0790024R	RES.CHIP 1/16W 100 OHM
RC84	0790037R	RES.CHIP 1/16W 1.0K OHM
RC85	0790043R	RES.CHIP 1/16W 2.7K OHM
RC90	0790024R	RES.CHIP 1/16W 100 OHM
RC93	0790037R	RES.CHIP 1/16W 1.0K OHM
RC94	0790017R	RES.CHIP 1/16W 33 OHM
RE01	0100065M	RES.-CARBON FLM 1/8W 1K-JB
RE02	0700055M	RES.-CARBON FLM 1/16W 12K-JB
RE03	0700066M	RES.-CARBON FLM 1/16W 82K-JB
RE04	0700024M	RES.-CARBON FLM 1/16W 56-J
RE05	AT03866M	470OHM 1/2W RDS50 CARBON FILM RESISTOR
RE06	0700018M	RES.-CARBON FLM 1/16W 22-J
RE07	0700054M	RES.-CARBON FLM 1/16W 10K-JB
RE08	0700054M	RES.-CARBON FLM 1/16W 10K-JB
RE09	0700055M	RES.-CARBON FLM 1/16W 12K-JB
RE10	0700055M	RES.-CARBON FLM 1/16W 12K-JB
RE11	0700027M	RES.-CARBON FLM 1/16W 100-JB
RE12	0700024M	RES.-CARBON FLM 1/16W 56-J
RE13	0700041M	RES.-CARBON FLM 1/16W 1.0K-JB
RE16	0700027M	RES.-CARBON FLM 1/16W 100-JB
RE17	AT03876M	2.7OHM 1/2W RDS50 CARBON FILM RESISTOR
RE18	0700065M	RES.-CARBON FLM 1/16W 68K-JB
RE19	0700052M	RES.-CARBON FLM 1/16W 6.8K-JB
RE20	0700024M	RES.-CARBON FLM 1/16W 56-J
RE21	AT03857M	100OHM 1/2W RDS50 CARBON FILM RESISTOR
RE23	AT03869M	820OHM 1/2W RDS50 CARBON FILM RESISTOR
RE24	0700027M	RES.-CARBON FLM 1/16W 100-JB
RE27	0113750M	RES.-CARBON FLM 1/2W 1K-JB
RE28	0700017M	RES.-CARBON FLM 1/16W 18-J
RE29	0113750M	RES.-CARBON FLM 1/2W 1K-JB
RE31	0700014M	RES.-CARBON FLM 1/16W 10-J
RE32	0700014M	RES.-CARBON FLM 1/16W 10-J
RE33	AT03848M	22.0OHM 1/2W RDS50 CARBON FILM RESISTOR
RE50	AT03419S	METAL OX. 470 OHM 2W
RE51	0700041M	RES.-CARBON FLM 1/16W 1.0K-JB
RE52	0100021M	RES.-CARBON FLM 1/8W 15-JB
RE55	0700067M	RES.-CARBON FLM 1/16W 100K-JB
RE56	0100065M	RES.-CARBON FLM 1/8W 1K-JB
RE57	0113791M	RES.-CARBON FLM 1/2W 47K-JB
RE60	AT03897M	100KOHM 1/2W RDS50 CARBON FILM RESISTOR
RE61	0100065M	RES.-CARBON FLM 1/8W 1K-JB
RE62	0100033M	RES.-CARBON FLM 1/8W 47-JB
RE66	0100033M	RES.-CARBON FLM 1/8W 47-JB
RE67	AT03853M	47.0OHM 1/2W RDS50 CARBON FILM RESISTOR
RE68	AT03853M	47.0OHM 1/2W RDS50 CARBON FILM RESISTOR
RE69	0113698M	RES.-CARBON FLM 1/2W 8.2-J
RE70	0113698M	RES.-CARBON FLM 1/2W 8.2-J
RE71	0100041M	RES.-CARBON FLM 1/8W 100-JB
RE72	0100041M	RES.-CARBON FLM 1/8W 100-JB
RE73	0100095M	RES.-CARBON FLM 1/8W 18K-JB
RE74	AT03894M	56KOHM 1/2W RDS50 CARBON FILM RESISTOR
RE75	AT03894M	56KOHM 1/2W RDS50 CARBON FILM RESISTOR
RE76	0100095M	RES.-CARBON FLM 1/8W 18K-JB
RE77	AT03571S	METAL OX. 220OHM 3W
RE78	AT03571S	METAL OX. 220OHM 3W
REE5	AT03897M	100KOHM 1/2W RDS50 CARBON FILM RESISTOR
REE6	0700065M	RES.-CARBON FLM 1/16W 68K-JB
REE7	0700064M	RES.-CARBON FLM 1/16W 56K-JB
REF0	0100113M	RES.-CARBON FLM 1/8W 100K-JB
REF1	0700055M	RES.-CARBON FLM 1/16W 12K-JB
REF4	0700047M	RES.-CARBON FLM 1/16W 3.3K-JB
RF07	0700067M	RES.-CARBON FLM 1/16W 100K-JB
RF08	0700055M	RES.-CARBON FLM 1/16W 12K-JB
RF09	0700054M	RES.-CARBON FLM 1/16W 10K-JB
RF10	AT03857M	100OHM 1/2W RDS50 CARBON FILM RESISTOR
RF11	0700041M	RES.-CARBON FLM 1/16W 1.0K-JB
RF13	0700056M	RES.-CARBON FLM 1/16W 15K-JB
RF14	0700025M	RES.-CARBON FLM 1/16W 68-J
RF15	AT03654M	RES.MTL GRAZD FLM 1/2W 180K
RF16	AT03654M	RES.MTL GRAZD FLM 1/2W 180K
RF17	AT03654M	RES.MTL GRAZD FLM 1/2W 180K
RF18	AT03662M	RES.MTL GRAZD FLM 1/2W 560K
RF19	AT03662M	RES.MTL GRAZD FLM 1/2W 560K
RF20	0700025M	RES.-CARBON FLM 1/16W 68-J
RF21	0700049M	RES.-CARBON FLM 1/16W 4.7K-JB
RF22	0187096M	RES.-CARBON FLM 1/16W 20K-JB
RF23	0700063M	RES.-CARBON FLM 1/16W 47K-JB
RF25	AT03662M	RES.MTL GRAZD FLM 1/2W 560K
RF26	AT03662M	RES.MTL GRAZD FLM 1/2W 560K
RF27	AT03661M	RES.MTL GRAZD FLM 1/2W 470K
RF28	0700059M	RES.-CARBON FLM 1/16W 27K-JB
RF29	0700049M	RES.-CARBON FLM 1/16W 4.7K-JB
RF30	AT03892M	39KOHM 1/2W RDS50 CARBON FILM RESISTOR
RF33	AT03892M	39KOHM 1/2W RDS50 CARBON FILM RESISTOR
RF34	0700045M	RES.-CARBON FLM 1/16W 2.2K-JB
RF35	AT03911M	1MOHM 1/2W RDS50 CARBON FILM RESISTOR
RF36	AT03857M	100OHM 1/2W RDS50 CARBON FILM RESISTOR
RF37	AT03911M	1MOHM 1/2W RDS50 CARBON FILM RESISTOR
RG04	0790001R	CHIP RESISTOR RECJUMPER-1-16C16T1608
RG06	0790024R	RES.CHIP 1/16W 100 OHM
RG07	0790052R	RES.CHIP 1/16W 12K OHM
RG08	0790057R	RES.CHIP 1/16W 33K OHM
RG09	0790022R	RES.CHIP 1/16W 68 OHM
RG13	0790024R	RES.CHIP 1/16W 100 OHM
RG21	0790001R	CHIP RESISTOR RECJUMPER-1-16C16T1608
RG23	0790024R	RES.CHIP 1/16W 100 OHM
RG24	0790052R	RES.CHIP 1/16W 12K OHM
RG25	0790057R	RES.CHIP 1/16W 33K OHM
RG26	0790022R	RES.CHIP 1/16W 68 OHM
RG30	0790024R	RES.CHIP 1/16W 100 OHM
RG39	0790001R	CHIP RESISTOR RECJUMPER-1-16C16T1608
RG41	0790024R	RES.CHIP 1/16W 100 OHM
RG42	0790052R	RES.CHIP 1/16W 12K OHM
RG43	0790057R	RES.CHIP 1/16W 33K OHM
RG44	0790022R	RES.CHIP 1/16W 68 OHM

PRODUCT SERVICE NOTE: Components marked with a ⚠ have special characteristics important to sefety. Before replacing any of these components, read carefully, the PRODUCT SAFETY NOTICE of this Service Manual. Don't degrade the safety of the receiver through improper servicing.

SYMBOL NO.	PART NO.	PART DESCRIPTION	SYMBOL NO.	PART NO.	PART DESCRIPTION
RG48	0790024R	RES.CHIP 1/16W 100 OHM	RJ15	AT03197S	METAL OX. 2.2OHM 1W
RG49	0790037R	RES.CHIP 1/16W 1.0K OHM	RJ16	AT03197S	METAL OX. 2.2OHM 1W
RG50	0790037R	RES.CHIP 1/16W 1.0K OHM	RJ17	AT03871M	1KOHM 1/2W RDS50 CARBON FILM RESISTOR
RG51	0790037R	RES.CHIP 1/16W 1.0K OHM	RJ18	AT03871M	1KOHM 1/2W RDS50 CARBON FILM RESISTOR
RG52	0790037R	RES.CHIP 1/16W 1.0K OHM	RJ19	0790001R	CHIP RES JUMPER-1-16C16T1608
RG53	0790037R	RES.CHIP 1/16W 1.0K OHM	RJ20	0790001R	CHIP RES JUMPER-1-16C16T1608
RG54	0790037R	RES.CHIP 1/16W 1.0K OHM	RJ53	0790001R	CHIP RESISTOR RECJUMPER-1-16C16T1608
RG58	0790051R	RES.CHIP 1/16W 10K OHM	RJ54	0790001R	CHIP RESISTOR RECJUMPER-1-16C16T1608
RG59	0790024R	RES.CHIP 1/16W 100 OHM	RK01	0700046M	RES.-CARBON FLM 1/16W 2.7K-JB
RG60	0790024R	RES.CHIP 1/16W 100 OHM	RK02	0700046M	RES.-CARBON FLM 1/16W 2.7K-JB
RG61	0790074R	RES.CHIP 1/16W 560K OHM	RK03	0700046M	RES.-CARBON FLM 1/16W 2.7K-JB
RG62	0790023R	RES.CHIP 1/16W 82 OHM	RK04	0700046M	RES.-CARBON FLM 1/16W 2.7K-JB
RG63	0790037R	RES.CHIP 1/16W 1.0K OHM	RK05	0700046M	RES.-CARBON FLM 1/16W 2.7K-JB
RH01	0700043M	RES.-CARBON FLM 1/16W 1.5K-JB	RK06	0700046M	RES.-CARBON FLM 1/16W 2.7K-JB
RH02	0700053M	RES.-CARBON FLM 1/16W 8.2K-JB	RK07	0700046M	RES.-CARBON FLM 1/16W 2.7K-JB
RH03	0700065M	RES.-CARBON FLM 1/16W 68K-JB	RK08	0700046M	RES.-CARBON FLM 1/16W 2.7K-JB
RH04	0700062M	RES.-CARBON FLM 1/16W 39K-JB	RK09	0100057M	RES.-CARBON FLM 1/8W 470-JB
RH05	0187098M	RES.-CARBON FLM 1/16W 24K-JB	RK10	0700042M	RES.-CARBON FLM 1/16W 1.2K-JB
RH07	0700047M	RES.-CARBON FLM 1/16W 3.3K-JB	RK11	0700041M	RES.-CARBON FLM 1/16W 1.0K-JB (53/61UDX)
RH08	0700045M	RES.-CARBON FLM 1/16W 2.2K-JB	RK12	0700041M	RES.-CARBON FLM 1/16W 1.0K-JB
RH09	0700049M	RES.-CARBON FLM 1/16W 4.7K-JB	RK13	0700041M	RES.-CARBON FLM 1/16W 1.0K-JB
RH10	AT03869M	820OHM 1/2W RDS50 CARBON FILM RESISTOR	RK17	0700046M	RES.-CARBON FLM 1/16W 2.7K-JB
RH13	0100033M	RES.-CARBON FLM 1/8W 47-JB	RK18	0700048M	RES.-CARBON FLM 1/16W 3.9K-JB
RH14	0700052M	RES.-CARBON FLM 1/16W 6.8K-JB	RK22	0700041M	RES.-CARBON FLM 1/16W 1.0K-JB
⚠ RH15	0148052	RES.-WIRE WOUND 0.68-K 3W	RK23	0700052M	RES.-CARBON FLM 1/16W 6.8K-JB
RH16	0100049M	RES.-CARBON FLM 1/8W 220-JB	RK24	0700043M	RES.-CARBON FLM 1/16W 1.5K-JB
RH17	AW00208	TRIMMER RESISTOR 100KOHM 1/2W	RK25	0700063M	RES.-CARBON FLM 1/16W 47K-JB
RH18	0700062M	RES.-CARBON FLM 1/16W 39K-JB	RK26	0700063M	RES.-CARBON FLM 1/16W 47K-JB
⚠ RH19	0119653M	RES.-MTL FLM 1/8W 82K-FB	RK27	0700054M	RES.-CARBON FLM 1/16W 10K-JB
⚠ RH20	0119647M	RES.-MTL FLM 1/8W 47K-FB	RK28	0700027M	RES.-CARBON FLM 1/16W 100-JB
RH21	AT03867M	560OHM 1/2W RDS50 CARBON FILM RESISTOR	RK29	0700027M	RES.-CARBON FLM 1/16W 100-JB
RH22	0700041M	RES.-CARBON FLM 1/16W 1.0K-JB	RK30	0700027M	RES.-CARBON FLM 1/16W 100-JB
⚠ RH23	AT03882M	6.8KOHM 1/2W RDS50 CARBON FILM RESISTOR	RK31	0700041M	RES.-CARBON FLM 1/16W 1.0K-JB
RH24	0119647M	RES.-MTL FLM 1/8W 47K-FB	RK32	0700041M	RES.-CARBON FLM 1/16W 1.0K-JB
⚠ RH25	0119639M	RES.-MTL FLM 1/8W 22K-FB	RK33	0700041M	RES.-CARBON FLM 1/16W 1.0K-JB
RH26	0700044M	RES.-CARBON FLM 1/16W 1.8K-JB	RK34	0700063M	RES.-CARBON FLM 1/16W 47K-JB
RH27	AT03892M	39KOHM 1/2W RDS50 CARBON FILM RESISTOR	RK35	0700063M	RES.-CARBON FLM 1/16W 47K-JB
RH28	AT03892M	39KOHM 1/2W RDS50 CARBON FILM RESISTOR	RK36	0700063M	RES.-CARBON FLM 1/16W 47K-JB
RH29	AT03891M	33KOHM 1/2W RDS50 CARBON FILM RESISTOR	RK37	0700063M	RES.-CARBON FLM 1/16W 47K-JB
RH30	0700063M	RES.-CARBON FLM 1/16W 47K-JB	RK38	0700063M	RES.-CARBON FLM 1/16W 47K-JB
RH31	AT03882M	6.8KOHM 1/2W RDS50 CARBON FILM RESISTOR	RK39	0700063M	RES.-CARBON FLM 1/16W 47K-JB
RH32	0100117M	RES.-CARBON FLM 1/8W 150K-JB	RK40	0700047M	RES.-CARBON FLM 1/16W 3.3K-JB
RJ01	0790042R	RES.CHIP 1/16W 2.2K OHM	RK42	******	SEE PAGE 147
RJ02	0790042R	RES.CHIP 1/16W 2.2K OHM	RK43	AT03411S	METAL OX. 220OHM 2W
RJ03	0790037R	RES.CHIP 1/16W 1.0K OHM	RK44	0700047M	RES.-CARBON FLM 1/16W 3.3K-JB
RJ04	0790037R	RES.CHIP 1/16W 1.0K OHM	RK46	******	SEE PAGE 147
RJ05	0790042R	RES.CHIP 1/16W 2.2K OHM	RK47	AT03406S	METAL OX. 150OHM 2W
RJ06	0790042R	RES.CHIP 1/16W 2.2K OHM	RK48	0700047M	RES.-CARBON FLM 1/16W 3.3K-JB
RJ07	0790059R	RES.CHIP 1/16W 47K OHM	RK50	******	SEE PAGE 147
RJ08	0790064R	RES.CHIP 1/16W 100K OHM	RK51	AT03411S	METAL OX. 220OHM 2W
RJ09	0790059R	RES.CHIP 1/16W 47K OHM	RK52	0700047M	RES.-CARBON FLM 1/16W 3.3K-JB
RJ10	0790033R	RES.CHIP 1/16W 470 OHM	RK54	******	SEE PAGE 147
RJ11	0790055R	RES.CHIP 1/16W 22K OHM	RK55	AT03406S	METAL OX. 150OHM 2W
RJ12	0790037R	RES.CHIP 1/16W 1.0K OHM	RK56	0700047M	RES.-CARBON FLM 1/16W 3.3K-JB
RJ13	0790062R	RES.CHIP 1/16W 68K OHM	RK58	******	SEE PAGE 147
RJ14	0790062R	RES.CHIP 1/16W 68K OHM	RK59	AT03411S	METAL OX. 220OHM 2W

PRODUCT SERVICE NOTE: Components marked with a ⚠ have special characteristics important to sefety. Before replacing any of these components, read carefully, the PRODUCT SAFETY NOTICE of this Service Manual. Don't degrade the safety of the receiver through improper servicing.

SYMBOL NO.	PART NO.	PART DESCRIPTION
RK60	0700047M	RES.-CARBON FLM 1/16W 3.3K-JB
RK62	******	SEE PAGE 147
RK63	AT03406S	METAL OX. 150OHM 2W
RK64	0700054M	RES.-CARBON FLM 1/16W 10K-JB
RK65	0700054M	RES.-CARBON FLM 1/16W 10K-JB
RK90	0700054M	RES.-CARBON FLM 1/16W 10K-JB
RK92	0700041M	RES.-CARBON FLM 1/16W 1.0K-JB
RK97	AT03193S	METAL OX. 1.5OHM 1W
RK99	0188097M	RES.-CARBON FLM 1/2W 3.3-J
RL10	0100129M	RES.-CARBON FLM 1/8W 470K-JB (53/61UDX)
RL11	0100129M	RES.-CARBON FLM 1/8W 470K-JB (53/61UDX)
RL16	0100129M	RES.-CARBON FLM 1/8W 470K-JB (53/61UDX)
RL17	0100129M	RES.-CARBON FLM 1/8W 470K-JB (53/61UDX)
RL20	0100121M	RES.-CARBON FLM 1/8W 220K-JB (53/61UDX
RL21	0100129M	RES.-CARBON FLM 1/8W 470K-JB (53/61UDX)
RL26	0100121M	RES.-CARBON FLM 1/8W 220K-JB (53/61UDX
RL27	0100129M	RES.-CARBON FLM 1/8W 470K-JB (53/61UDX)
RL30	0700027M	RES.-CARBON FLM 1/16W 100-JB (53/61UDX)
RL31	0700027M	RES.-CARBON FLM 1/16W 100-JB (53/61UDX)
RL36	0700027M	RES.-CARBON FLM 1/16W 100-JB (53/61UDX)
RL37	0700027M	RES.-CARBON FLM 1/16W 100-JB (53/61UDX)
RM01	0700041M	RES.-CARBON FLM 1/16W 1.0K-JB
RM02	0700058M	RES.-CARBON FLM 1/16W 22K-JB
RM03	0700045M	RES.-CARBON FLM 1/16W 2.2K-JB
RM04	0100065M	RES.-CARBON FLM 1/8W 1K-JB
RM05	0100065M	RES.-CARBON FLM 1/8W 1K-JB
RM06	0700041M	RES.-CARBON FLM 1/16W 1.0K-JB
RM07	0700043M	RES.-CARBON FLM 1/16W 1.5K-JB
RM08	0700046M	RES.-CARBON FLM 1/16W 2.7K-JB
RM09	0700049M	RES.-CARBON FLM 1/16W 4.7K-JB
RM10	0100129M	RES.-CARBON FLM 1/8W 470K-JB
RM11	0700041M	RES.-CARBON FLM 1/16W 1.0K-JB
RM12	0100125M	RES.-CARBON FLM 1/8W 330K-JB
RM13	AT03871M	1KOHM 1/2W RDS50 CARBON FILM RESISTOR
RM14	0100125M	RES.-CARBON FLM 1/8W 330K-JB
RM15	0700054M	RES.-CARBON FLM 1/16W 10K-JB
RM20	0100041M	RES.-CARBON FLM 1/8W 100-JB
RM21	0700041M	RES.-CARBON FLM 1/16W 1.0K-JB
RM22	0700041M	RES.-CARBON FLM 1/16W 1.0K-JB
RM23	0700064M	RES.-CARBON FLM 1/16W 56K-JB
RM24	0700045M	RES.-CARBON FLM 1/16W 2.2K-JB
RM25	0100123M	RES.-CARBON FLM 1/8W 270K-JB
RM26	0700047M	RES.-CARBON FLM 1/16W 3.3K-JB
RM27	0700064M	RES.-CARBON FLM 1/16W 56K-JB
RM28	0100123M	RES.-CARBON FLM 1/8W 270K-JB
RM29	0700041M	RES.-CARBON FLM 1/16W 1.0K-JB
RM30	0700041M	RES.-CARBON FLM 1/16W 1.0K-JB
RM31	0100041M	RES.-CARBON FLM 1/8W 100-JB
RM35	0700041M	RES.-CARBON FLM 1/16W 1.0K-JB
RM38	0700041M	RES.-CARBON FLM 1/16W 1.0K-JB
RM40	0700067M	RES.-CARBON FLM 1/16W 100K-JB
RM41	0700032M	RES.-CARBON FLM 1/16W 220-JB
RM42	0700041M	RES.-CARBON FLM 1/16W 1.0K-JB
RM43	0700059M	RES.-CARBON FLM 1/16W 27K-JB
RN01	0700054M	RES.-CARBON FLM 1/16W 10K-JB
RN02	0700057M	RES.-CARBON FLM 1/16W 18K-JB
RN03	0700061M	RES.-CARBON FLM 1/16W 33K-JB
RN04	0700058M	RES.-CARBON FLM 1/16W 22K-JB
RN05	0700051M	RES.-CARBON FLM 1/16W 5.6K-JB
RN06	0700044M	RES.-CARBON FLM 1/16W 1.8K-JB
RN08	0700051M	RES.-CARBON FLM 1/16W 5.6K-JB
RN09	0700052M	RES.-CARBON FLM 1/16W 6.8K-JB
RN10	0700054M	RES.-CARBON FLM 1/16W 10K-JB
RN11	0700067M	RES.-CARBON FLM 1/16W 100K-JB
RN12	0700041M	RES.-CARBON FLM 1/16W 1.0K-JB
RN13	0700052M	RES.-CARBON FLM 1/16W 6.8K-JB
RN14	0700041M	RES.-CARBON FLM 1/16W 1.0K-JB
RN15	0700052M	RES.-CARBON FLM 1/16W 6.8K-JB
RN16	0700052M	RES.-CARBON FLM 1/16W 6.8K-JB
RN17	0700063M	RES.-CARBON FLM 1/16W 47K-JB
RP01	AT03905M	390KOHM 1/2W RDS50 CARBON FILM RESISTOR
RP02	AT03444S	METAL OX. 3.9KOHM 2W
RP03	AT03444S	METAL OX. 3.9KOHM 2W
RP04	0700038M	RES.-CARBON FLM 1/16W 680-JB
RP05	AT03844M	10.0OHM 1/2W RDS50 CARBON FILM RESISTOR
⚠ RP07	AT03665M	RES.MTL GRAZD FLM 1/2W 1M
RP08	0700045M	RES.-CARBON FLM 1/16W 2.2K-JB
RP09	0700047M	RES.-CARBON FLM 1/16W 3.3K-JB
RP10	AT01534S	METAL FILM 0.22OHM 1/2W
RP11	AT01534S	METAL FILM 0.22OHM 1/2W
RP12	AT01534S	METAL FILM 0.22OHM 1/2W
RP13	0700055M	RES.-CARBON FLM 1/16W 12K-JB
RP14	0700041M	RES.-CARBON FLM 1/16W 1.0K-JB
RP15	0700032M	RES.-CARBON FLM 1/16W 220-JB
RP16	AT01534S	METAL FILM 0.22OHM 1/2W
RP19	0700051M	RES.-CARBON FLM 1/16W 5.6K-JB
RP20	AT03886M	15KOHM 1/2W RDS50 CARBON FILM RESISTOR
RP21	AT03886M	15KOHM 1/2W RDS50 CARBON FILM RESISTOR
RP22	AT03608S	METAL OX. 5.6KOHM 3W
RP23	AT03879M	4.7KOHM 1/2W RDS50 CARBON FILM RESISTOR
RP24	AT03179S	METAL OX. 0.47OHM 1W
RP25	0700054M	RES.-CARBON FLM 1/16W 10K-JB
RP26	AT03896M	82KOHM 1/2W RDS50 CARBON FILM RESISTOR
RP27	0700049M	RES.-CARBON FLM 1/16W 4.7K-JB
RP28	0700058M	RES.-CARBON FLM 1/16W 22K-JB
RP29	0700063M	RES.-CARBON FLM 1/16W 47K-JB
⚠ RP30	0700036M	RES.-CARBON FLM 1/16W 470-JB
RP31	AT03894M	56KOHM 1/2W RDS50 CARBON FILM RESISTOR
RP32	AT03894M	56KOHM 1/2W RDS50 CARBON FILM RESISTOR
RP33	0700054M	RES.-CARBON FLM 1/16W 10K-JB
RP34	0700052M	RES.-CARBON FLM 1/16W 6.8K-JB
RP35	0700063M	RES.-CARBON FLM 1/16W 47K-JB
RP40	0700045M	RES.-CARBON FLM 1/16W 2.2K-JB
RP41	0700041M	RES.-CARBON FLM 1/16W 1.0K-JB
RP44	0700043M	RES.-CARBON FLM 1/16W 1.5K-JB
RP46	0700041M	RES.-CARBON FLM 1/16W 1.0K-JB
RX01	0790024R	RES.CHIP 1/16W 100 OHM
RX02	0790047R	RES.CHIP 1/16W 5.6K OHM
RX03	0790047R	RES.CHIP 1/16W 5.6K OHM
RX04	AQ00164R	RES.CHIP 1/16W 75 OHM TAPE
RX05	0790069R	RES.CHIP 1/16W 270K OHM
RX06	0790069R	RES.CHIP 1/16W 270K OHM

PRODUCT SERVICE NOTE: Components marked with a ⚠ have special characteristics important to sefety. Before replacing any of these components, read carefully, the PRODUCT SAFETY NOTICE of this Service Manual. Don't degrade the safety of the receiver through improper servicing.

SYMBOL NO.	PART NO.	PART DESCRIPTION	SYMBOL NO.	PART NO.	PART DESCRIPTION
RX07	0790024R	RES.CHIP 1/16W 100 OHM	RX69	0790037R	RES.CHIP 1/16W 1.0K OHM
RX08	0790024R	RES.CHIP 1/16W 100 OHM	RX70	AQ00164R	RES.CHIP 1/16W 75 OHM TAPE
RX09	AQ00164R	RES.CHIP 1/16W 75 OHM TAPE	RX71	0790024R	RES.CHIP 1/16W 100 OHM
RX10	AQ00164R	RES.CHIP 1/16W 75 OHM TAPE	RX72	AQ00164R	RES.CHIP 1/16W 75 OHM TAPE
RX11	0790037R	RES.CHIP 1/16W 1.0K OHM	RX73	0790024R	RES.CHIP 1/16W 100 OHM
RX12	0790024R	RES.CHIP 1/16W 100 OHM	RX74	0790037R	RES.CHIP 1/16W 1.0K OHM
RX13	0790047R	RES.CHIP 1/16W 5.6K OHM	RX75	0790047R	RES.CHIP 1/16W 5.6K OHM
RX14	0790047R	RES.CHIP 1/16W 5.6K OHM	RX76	0790047R	RES.CHIP 1/16W 5.6K OHM
RX15	AQ00164R	RES.CHIP 1/16W 75 OHM TAPE	RX77	0790037R	RES.CHIP 1/16W 1.0K OHM
RX16	0790069R	RES.CHIP 1/16W 270K OHM	RX78	0790024R	RES.CHIP 1/16W 100 OHM
RX17	0790069R	RES.CHIP 1/16W 270K OHM	RX79	AQ00164R	RES.CHIP 1/16W 75 OHM TAPE
RX18	0790024R	RES.CHIP 1/16W 100 OHM	RX80	0790024R	RES.CHIP 1/16W 100 OHM
RX19	0790024R	RES.CHIP 1/16W 100 OHM	RX81	0790024R	RES.CHIP 1/16W 100 OHM
RX20	AQ00164R	RES.CHIP 1/16W 75 OHM TAPE	RX82	0790033R	RES.CHIP 1/16W 470 OHM
RX21	AQ00164R	RES.CHIP 1/16W 75 OHM TAPE	RX83	0790033R	RES.CHIP 1/16W 470 OHM
RX22	0790037R	RES.CHIP 1/16W 1.0K OHM	RX84	AQ00185R	RES.CHIP 1/16W 470 OHM TAPE
RX23	AQ00164R	RES.CHIP 1/16W 75 OHM TAPE	RX85	AQ00176R	RES.CHIP 1/16W 220 OHM TAPE
RX24	AQ00164R	RES.CHIP 1/16W 75 OHM TAPE	RX86	AQ00176R	RES.CHIP 1/16W 220 OHM TAPE
RX25	AQ00164R	RES.CHIP 1/16W 75 OHM TAPE	RX87	0790024R	RES.CHIP 1/16W 100 OHM
RX26	0790047R	RES.CHIP 1/16W 5.6K OHM	RX88	0790024R	RES.CHIP 1/16W 100 OHM
RX27	0790047R	RES.CHIP 1/16W 5.6K OHM	RX89	0790024R	RES.CHIP 1/16W 100 OHM
RX28	0790069R	RES.CHIP 1/16W 270K OHM	RX90	0790046R	RES.CHIP 1/16W 4.7K OHM
RX29	0790069R	RES.CHIP 1/16W 270K OHM	RX91	0790043R	RES.CHIP 1/16W 2.7K OHM
RX35	AQ00164R	RES.CHIP 1/16W 75 OHM TAPE	RX92	0790044R	RES.CHIP 1/16W 3.3K OHM
RX36	AQ00164R	RES.CHIP 1/16W 75 OHM TAPE	RX94	0790001R	CHIP RESISTOR RECJUMPER-1-16C16T1608
RX37	AQ00164R	RES.CHIP 1/16W 75 OHM TAPE	RX95	0790051R	RES.CHIP 1/16W 10K OHM
RX38	0790047R	RES.CHIP 1/16W 5.6K OHM	RX96	0790051R	RES.CHIP 1/16W 10K OHM
RX39	0790047R	RES.CHIP 1/16W 5.6K OHM	RY01	0790043R	RES.CHIP 1/16W 2.7K OHM
RX40	0790069R	RES.CHIP 1/16W 270K OHM	RY02	0790043R	RES.CHIP 1/16W 2.7K OHM
RX41	0790069R	RES.CHIP 1/16W 270K OHM	RY03	0790043R	RES.CHIP 1/16W 2.7K OHM
RX42	AQ00163R	RES.CHIP 1/16W 68 OHM TAPE	RY04	0790024R	RES.CHIP 1/16W 100 OHM
RX43	0790037R	RES.CHIP 1/16W 1.0K OHM	RY05	0790024R	RES.CHIP 1/16W 100 OHM
RX44	0790037R	RES.CHIP 1/16W 1.0K OHM	RY06	0196104R	RES 1608 CHIP 1/16W 30KJ TAPE
RX45	0790064R	RES.CHIP 1/16W 100K OHM	RY07	0196079R	RES.-1608CHIP 1/16W 3.0K-J TAPE
RX46	0790064R	RES.CHIP 1/16W 100K OHM	RY08	0196056R	RES.-1608CHIP 1/16W 360-J TAPE
RX47	0790064R	RES.CHIP 1/16W 100K OHM	RY09	0790024R	RES.CHIP 1/16W 100 OHM
RX48	AQ00163R	RES.CHIP 1/16W 68 OHM TAPE	RY10	0790024R	RES.CHIP 1/16W 100 OHM
RX49	AQ00163R	RES.CHIP 1/16W 68 OHM TAPE	RY11	0790024R	RES.CHIP 1/16W 100 OHM
RX50	0790064R	RES.CHIP 1/16W 100K OHM	RY12	0790034R	RES.CHIP 1/16W 560 OHM
RX51	0790064R	RES.CHIP 1/16W 100K OHM	RY13	0790034R	RES.CHIP 1/16W 560 OHM
RX52	0790037R	RES.CHIP 1/16W 1.0K OHM	RY14	0790034R	RES.CHIP 1/16W 560 OHM
RX54	0790037R	RES.CHIP 1/16W 1.0K OHM	RY15	0790034R	RES.CHIP 1/16W 560 OHM
RX55	0790046R	RES.CHIP 1/16W 4.7K OHM	RY16	0790034R	RES.CHIP 1/16W 560 OHM
RX56	0790024R	RES.CHIP 1/16W 100 OHM	RY17	0790034R	RES.CHIP 1/16W 560 OHM
RX57	0790024R	RES.CHIP 1/16W 100 OHM	RY18	0790034R	RES.CHIP 1/16W 560 OHM
RX58	0790024R	RES.CHIP 1/16W 100 OHM	RY19	0790034R	RES.CHIP 1/16W 560 OHM
RX59	0790024R	RES.CHIP 1/16W 100 OHM	RY20	0790034R	RES.CHIP 1/16W 560 OHM
RX60	0790024R	RES.CHIP 1/16W 100 OHM	RY21	0790024R	RES.CHIP 1/16W 100 OHM
RX61	0790024R	RES.CHIP 1/16W 100 OHM	RY22	0790024R	RES.CHIP 1/16W 100 OHM
RX62	0790024R	RES.CHIP 1/16W 100 OHM	RY23	0790024R	RES.CHIP 1/16W 100 OHM
RX63	0790024R	RES.CHIP 1/16W 100 OHM	RY24	0790037R	RES.CHIP 1/16W 1.0K OHM
RX64	0790024R	RES.CHIP 1/16W 100 OHM	RY25	0790037R	RES.CHIP 1/16W 1.0K OHM
RX65	0790024R	RES.CHIP 1/16W 100 OHM	RY26	0790037R	RES.CHIP 1/16W 1.0K OHM
RX66	0790024R	RES.CHIP 1/16W 100 OHM	RY27	0790001R	CHIP RESISTOR RECJUMPER-1-16C16T1608
RX67	0790042R	RES.CHIP 1/16W 2.2K OHM	RY28	0790001R	CHIP RESISTOR RECJUMPER-1-16C16T1608
RX68	0790024R	RES.CHIP 1/16W 100 OHM	RY29	0790001R	CHIP RESISTOR RECJUMPER-1-16C16T1608

PRODUCT SERVICE NOTE: Components marked with a ⚠ have special characteristics important to sefety. Before replacing any of these components, read carefully, the PRODUCT SAFETY NOTICE of this Service Manual. Don't degrade the safety of the receiver through improper servicing.

SYMBOL NO.	PART NO.	PART DESCRIPTION	SYMBOL NO.	PART NO.	PART DESCRIPTION
RY30	0790001R	CHIP RESISTOR RECJUMPER-1-16C16T1608	RY88	0790024R	RES.CHIP 1/16W 100 OHM
RY31	0790001R	CHIP RESISTOR RECJUMPER-1-16C16T1608	RY89	0790024R	RES.CHIP 1/16W 100 OHM
RY32	0790001R	CHIP RESISTOR RECJUMPER-1-16C16T1608	RY90	0790024R	RES.CHIP 1/16W 100 OHM
RY33	0790001R	CHIP RESISTOR RECJUMPER-1-16C16T1608	RY91	0790024R	RES.CHIP 1/16W 100 OHM
RY34	0790001R	CHIP RESISTOR RECJUMPER-1-16C16T1608	RY92	0790037R	RES.CHIP 1/16W 1.0K OHM
RY35	0790001R	CHIP RESISTOR RECJUMPER-1-16C16T1608	RY93	0790037R	RES.CHIP 1/16W 1.0K OHM
RY36	0790001R	CHIP RESISTOR RECJUMPER-1-16C16T1608	RY94	0790037R	RES.CHIP 1/16W 1.0K OHM
RY37	0790001R	CHIP RESISTOR RECJUMPER-1-16C16T1608	RY95	0790024R	RES.CHIP 1/16W 100 OHM
RY38	0790001R	CHIP RESISTOR RECJUMPER-1-16C16T1608	RY96	0790024R	RES.CHIP 1/16W 100 OHM
RY39	0790001R	CHIP RESISTOR RECJUMPER-1-16C16T1608	RY97	0790024R	RES.CHIP 1/16W 100 OHM
RY40	0790001R	CHIP RESISTOR RECJUMPER-1-16C16T1608	RY98	0790041R	RES.CHIP 1/16W 1.8K OHM
RY41	0790037R	RES.CHIP 1/16W 1.0K OHM	RY99	0790041R	RES.CHIP 1/16W 1.8K OHM
RY42	0790037R	RES.CHIP 1/16W 1.0K OHM	RZ01	0790041R	RES.CHIP 1/16W 1.8K OHM
RY44	AQ00221R	RES.CHIP 1/16W 10K OHM TAPE	RZ02	0790001R	CHIP RESISTOR RECJUMPER-1-16C16T1608
RY45	0790001R	CHIP RESISTOR RECJUMPER-1-16C16T1608	RZ03	0790001R	CHIP RESISTOR RECJUMPER-1-16C16T1608
RY46	0790024R	RES.CHIP 1/16W 100 OHM	RZ04	0790001R	CHIP RESISTOR RECJUMPER-1-16C16T1608
RY47	0790024R	RES.CHIP 1/16W 100 OHM	RZ05	0790001R	CHIP RESISTOR RECJUMPER-1-16C16T1608
RY48	0790001R	CHIP RESISTOR RECJUMPER-1-16C16T1608	RZ06	0790001R	CHIP RESISTOR RECJUMPER-1-16C16T1608
RY49	0790001R	CHIP RESISTOR RECJUMPER-1-16C16T1608	RZ07	0790001R	CHIP RESISTOR RECJUMPER-1-16C16T1608
RY50	0790001R	CHIP RESISTOR RECJUMPER-1-16C16T1608	RZ08	0790001R	CHIP RESISTOR RECJUMPER-1-16C16T1608
RY51	0790001R	CHIP RESISTOR RECJUMPER-1-16C16T1608	RZ09	0790024R	RES.CHIP 1/16W 100 OHM
RY52	0790001R	CHIP RESISTOR RECJUMPER-1-16C16T1608	RZ10	0790024R	RES.CHIP 1/16W 100 OHM
RY53	0790001R	CHIP RESISTOR RECJUMPER-1-16C16T1608	RZ11	0790024R	RES.CHIP 1/16W 100 OHM
RY54	0790001R	CHIP RESISTOR RECJUMPER-1-16C16T1608	RZ12	0790001R	CHIP RESISTOR RECJUMPER-1-16C16T1608
RY55	0790001R	CHIP RESISTOR RECJUMPER-1-16C16T1608	RZ13	0790001R	CHIP RESISTOR RECJUMPER-1-16C16T1608
RY56	0790001R	CHIP RESISTOR RECJUMPER-1-16C16T1608	RZ15	0790001R	CHIP RESISTOR RECJUMPER-1-16C16T1608
RY57	0790001R	CHIP RESISTOR RECJUMPER-1-16C16T1608	RZ17	0790001R	CHIP RESISTOR RECJUMPER-1-16C16T1608
RY58	0790001R	CHIP RESISTOR RECJUMPER-1-16C16T1608	RZ18	0790059R	RES.CHIP 1/16W 47K OHM
RY59	0790001R	CHIP RESISTOR RECJUMPER-1-16C16T1608	RZ19	0790059R	RES.CHIP 1/16W 47K OHM
RY60	0790001R	CHIP RESISTOR RECJUMPER-1-16C16T1608	RZ20	0790037R	RES.CHIP 1/16W 1.0K OHM
RY61	0790001R	CHIP RESISTOR RECJUMPER-1-16C16T1608	RZ21	0790051R	RES.CHIP 1/16W 10K OHM
RY62	0790037R	RES.CHIP 1/16W 1.0K OHM	RZ22	0790064R	RES.CHIP 1/16W 100K OHM
RY64	0790037R	RES.CHIP 1/16W 1.0K OHM	RZ23	0790056R	RES.CHIP 1/16W 27K OHM
RY65	AQ00221R	RES.CHIP 1/16W 10K OHM TAPE	RZ24	0790044R	RES.CHIP 1/16W 3.3K OHM
RY66	0790001R	CHIP RESISTOR RECJUMPER-1-16C16T1608	RZ25	0790051R	RES.CHIP 1/16W 10K OHM
RY67	0790024R	RES.CHIP 1/16W 100 OHM	RZ27	0790051R	RES.CHIP 1/16W 10K OHM
RY68	0790024R	RES.CHIP 1/16W 100 OHM	RZ33	0790024R	RES.CHIP 1/16W 100 OHM
RY69	0790024R	RES.CHIP 1/16W 100 OHM	RZ37	0790037R	RES.CHIP 1/16W 1.0K OHM
RY70	0790024R	RES.CHIP 1/16W 100 OHM	RZ39	0790037R	RES.CHIP 1/16W 1.0K OHM
RY71	0790037R	RES.CHIP 1/16W 1.0K OHM	RZ41	0790001R	CHIP RESISTOR RECJUMPER-1-16C16T1608
RY72	0790037R	RES.CHIP 1/16W 1.0K OHM	RZ43	0790055R	RES.CHIP 1/16W 22K OHM
RY73	0790037R	RES.CHIP 1/16W 1.0K OHM	RZ44	0790024R	RES.CHIP 1/16W 100 OHM
RY74	0790024R	RES.CHIP 1/16W 100 OHM	RZ45	0790024R	RES.CHIP 1/16W 100 OHM
RY75	0790024R	RES.CHIP 1/16W 100 OHM	RZ46	0790042R	RES.CHIP 1/16W 2.2K OHM
RY76	0790024R	RES.CHIP 1/16W 100 OHM	RZ47	0790044R	RES.CHIP 1/16W 3.3K OHM
RY77	0790024R	RES.CHIP 1/16W 100 OHM	RZ48	0790044R	RES.CHIP 1/16W 3.3K OHM
RY78	0790024R	RES.CHIP 1/16W 100 OHM	RZ49	0790039R	RES.CHIP 1/16W 1.5K OHM
RY79	0790037R	RES.CHIP 1/16W 1.0K OHM	RZ50	0790039R	RES.CHIP 1/16W 1.5K OHM
RY80	0790037R	RES.CHIP 1/16W 1.0K OHM	RZ51	0790033R	RES.CHIP 1/16W 470 OHM
RY81	0790037R	RES.CHIP 1/16W 1.0K OHM	RZ52	0790033R	RES.CHIP 1/16W 470 OHM
RY82	0790024R	RES.CHIP 1/16W 100 OHM	RZ53	0790039R	RES.CHIP 1/16W 1.5K OHM
RY83	0790024R	RES.CHIP 1/16W 100 OHM	RZ54	0790033R	RES.CHIP 1/16W 470 OHM
RY84	0790024R	RES.CHIP 1/16W 100 OHM	RZ55	0790039R	RES.CHIP 1/16W 1.5K OHM
RY85	0790024R	RES.CHIP 1/16W 100 OHM	RZ56	0790033R	RES.CHIP 1/16W 470 OHM
RY86	0790024R	RES.CHIP 1/16W 100 OHM	RZ57	0790053R	RES.CHIP 1/16W 15K OHM
RY87	0790024R	RES.CHIP 1/16W 100 OHM	RZ58	0790028R	RES.CHIP 1/16W 220 OHM

PRODUCT SERVICE NOTE: Components marked with a ⚠ have special characteristics important to sefety. Before replacing any of these components, read carefully, the PRODUCT SAFETY NOTICE of this Service Manual. Don't degrade the safety of the receiver through improper servicing.

SYMBOL NO.	PART NO.	PART DESCRIPTION
RZ59	0790063R	RES.CHIP 1/16W 82K OHM
RZ60	0790037R	RES.CHIP 1/16W 1.0K OHM
RZ61	0790028R	RES.CHIP 1/16W 220 OHM
RZ62	0790063R	RES.CHIP 1/16W 82K OHM
RZ63	0790037R	RES.CHIP 1/16W 1.0K OHM
RZ64	0790001R	CHIP RESISTOR RECJUMPER-1-16C16T1608
RZ65	0790001R	CHIP RESISTOR RECJUMPER-1-16C16T1608
RZ66	0790001R	CHIP RESISTOR RECJUMPER-1-16C16T1608
RZ67	0790001R	CHIP RESISTOR RECJUMPER-1-16C16T1608
		SWITCHES/RELAYS
⚠ S901	FJ00142	RELAY ALKS329 POWER RELAY
⚠ S902	FJ00142	RELAY ALKS329 AUDIO RELAY
SK01	FE10332R	DCU SERVICE SWITCH
SM01	FE00001R	PUSH SWITCH
SM02	FE00001R	PUSH SWITCH
SM03	FE00001R	PUSH SWITCH
SM04	FE00001R	PUSH SWITCH
SM05	FE00001R	PUSH SWITCH
SM06	FE00001R	PUSH SWITCH
SM07	FE00001R	PUSH SWITCH
SM09	FE10332R	SWITCH (TYPE SWP01N01TKSH0636BT)
		TRANSFORMERS
⚠ T701	BZ03982	CHOKE TRANS.-DP1X (HOT) (53/61UDX)
⚠ T701	BZ03983	CHOKE TRANS.-DP15F (43FDX)
⚠ T702	BZ03061	DRIVE TRANS.-DJ81
⚠ T901	BT01961	SWITCHING TRANSFORMER
⚠ TH01	BW00634	HFL1735YP(2H/0.48 H) FBT
⚠ TP91	BT01951	SWITCHING TRANSFORMER
		COMPOUND COMPONENTS
⚠ **U402**	GK00701	**160 mm Speaker, Left, UDX (DP-15)**
⚠ **U406**	GK00701	**160 mm Speaker, Right, UDX (DP-15)**
⚠ **U402**	GK00482	**120 mm Speaker, Left, FDX (DP-15E)**
⚠ **U406**	GK00482	**120 mm Speaker, Right, FDX (DP-15E)**
⚠ U501	HC00511	ENGE6106D(FRONT-END) MAIN TUNER
⚠ U502	HC00462	ENG36614G(FRONT-END) PIP TUNER
UC01	CS00493	FC UNIT (HC5613) (53/61UDX) PIP
UC01	CS00553	FLEX CONTROLLER PIP UNIT HC5613T 43" FDX
⚠ UFPK	AZ00006	CRX FOCUS PACK
UKDG	CS00453	DIGITAL CONVERGENCE UNIT HC2153
		CRYSTAL
X001	2163971	CERAMIC FILTER 4MHZ
X301	2168601	VFL-HC49U/S 20.00MHZ
X302	BE00341	3.58MHZ BAND PASS LC FILTER
X303	BE00351	6.0MHZ LOW PASS LC FILTER
X551	2791501	CRYSTAL HC-49/U
X552	2168771	X'TAL(TYPE CSB503F30)
X901	AJ00322	ENC271D-14A

SYMBOL NO.	PART NO.	PART DESCRIPTION
XC01	2168771	X'TAL(TYPE CSB503F30)
XX01	2791501	CRYSTAL HC-49/U
XX02	2168771	X'TAL(TYPE CSB503F30)
XX03	2163971	CERAMIC FILTER 4MHZ
XX04	2163971	CERAMIC FILTER 4MHZ
		MISCELLANEOUS
#005	NA11705	SB LENS CRT METAL (BLACK) 53/61UDX
#005	NA48901	LENS/CRT METAL 43UDX
#011	UE08951	CPC-LFM LC B.ASY(R) 53UDX
#011	UE08772	43FDX10B CORE B.ASY
#011	UE09101	43FDX10B CORE B.ASY
#011L	LUE0877	53/43FDX CORE B.ASY
#011L	LUE0910	43FDX10B CORE B.ASY
#013L	LUE0895	CPC-LFM LC B.ASY 53UDX
#016L	LUE0778	CPD-LTG LC B.ASY 43UDX
#017L	LUE0919	CPD-LFM LC B.ASY 61UDX
#018	NA47422	43" GRIP METAL
#019L	LUE0919	CPD-LFM LC B.ASY 61UDX
#021L	LQD2213	53" CABINET ASY
#021L	LQD2147	43" CABINET ASY
#022L	LQD2214	61" CABINET ASY
#031L	LQG0081	53" BACK COVER ASSY
#031L	LQG0119	43" REAR COVER ASY
#032L	LQG0083	61" BACK COVER ASSY 1ST
#041L	LNT0227	53/61FDX10B FRAME
#041L	LNT0228	43" FRAME ASY
#10	H311513	CONTROL PANEL BOX (W/B)
#10C	QD04113	61UDX BACK COVER
#110	NJ04211	LONG GRIP
#110	33200071	BACK CENTER BAR 53"
#111	NJ04231	SIDE GRIP (L)(61UDX)
#111	PH30183	TERMINAL HOLDER
#111	33010381	BARRIER BOARD 43"
#111A	NA49721	BARRIER SUPPORT METAL RIGHT 43"
#111B	NA49722	BARRIER SUPPORT METAL LEFT 43"
#112	NJ04232	SIDE GRIP (R) (61UDX)
#112	55020075	FRONT DOOR 53"
#113	NJ04233	SIDE GRIP (L) 53UDX
#114	NJ04234	SIDE GRIP (R) 53UDX
#114	55020076	FRONT DOOR ASSY 43"
#118	H310171	VELCRO (LOOP SIDE)
#120A	PH09657	CONTROL PANEL SUB ASSY (43FDX)
#120C	PH09655	CONTROL PANEL SUB ASSY (53/61UDX)
#121	PH09961	TERMINAL HOLDER
#130	H311531	CONTROL DOOR
#131	PH30162	DECORATION PLATE ANT
#135	3875771	LATCH 4T02 NYLON
#140	H311541	SELECT BUTTONS 43FDX
#141	PH30173	DECORATION PLATE AV
#148	H311542	SELECT BUTTONS PAINTED (53/61UDX)
#15	H312171	REAR COVER 53UDX
	EV00554	**AC Cord for 43"**
	EV00555	**AC Cord for 53" / 61"**

PRODUCT SERVICE NOTE: Components marked with a ⚠ have special characteristics important to sefety. Before replacing any of these components, read carefully, the PRODUCT SAFETY NOTICE of this Service Manual. Don't degrade the safety of the receiver through improper servicing.

SYMBOL NO.	PART NO.	PART DESCRIPTION	SYMBOL NO.	PART NO.	PART DESCRIPTION
#150	H311522	RC POWER LENS	E3B	2958351	CONN. W/WIRE MINI 2J
#160	PH05747	INDOOR PLATE	E3G	2958351	CONN. W/WIRE MINI 2J
#160	H311141	CABINET WIRE CLAMP	E3R	2958351	CONN. W/WIRE MINI 2J
#161	3827877	DOOR PLATE	⚠ E801	EY00941	CRT-SOCKET HPS1600-016409
#186	NA48911	SP PWB SUPPORT BRACKET	⚠ E851	EY00941	CRT-SOCKET HPS1600-016409
#20	KS02024	43" MODELS MIRROR GLASS	⚠ E8A1	EY00941	CRT-SOCKET HPS1600-016409
#210	H312194	ENERGY STAR STICKER	E901	EV00555	COD-VM0284-302GL250 43"
#231	NJ02992	CPT SOCKET HOLDER 29.1	E901	EV00554	COD-AC-VM0284-302GL
#234	MK00732	CPT SOCKET HOLDER BAND 2	EAN	2974056S	3J CONNE SEH UL1007 L=160
#250	NJ01301	CENSOR HOLDER	EANT	HP00771	ANT SW
#260	H311851	ULTRA DIGITAL BADGE	EAQ1	EF08462	CO-04C-C2R5-102 LOCK
#261	PU00603	ULTRADIGITAL BADGE 43"	EAS0	FT00011	(AM3011) MF SENSOR 1
#299	PH07002	PAINT ASS'Y 53" BOTTOM RAIL	EAS1	FT00011	SOLAR BATTERY(AM3011) MF SENSOR 3
#30	NA47451	H. MIRROR METAL 43"	EAS6	FT00011	SOLAR BATTERY(AM3011) MF SENSOR 5
#300	PH07042	PAINT ASS'Y 61 BOTTOM RAIL	EAS7	FT00011	SOLAR BATTERY(AM3011) MF SENSOR 7
#40	NA47442	SENTRAL METAL LEFT 43"	ECV	2973774S	5P CONNE.L=750
#415	PH08913	53UDX SPEAKER GRILL ASSY	ECV	2973774S	5P CONNE.L=750
#416	PH07424	61UDX SPEAKER GRILL ASSY	ECV	2973774S	5P CONNE.L=750
#417	H512289	LOWER REAR BOARD 53"	ED07	EY00791	PJX-LEAD-PLUGPIN
#418	H512282	LOWER REAR BOARD 61"	ED08	EY00791	PJX-LEAD-PLUGPIN
#428	3727972	POWER CORD HANGER	ED12	EY00791	PJX-LEAD-PLUGPIN
#432	H512276	LOWER REAR BOARD 43"	ED13	EY00791	PJX-LEAD-PLUGPIN
#45	NA47441	CENTRAL METAL RIGHT 43"	ED15	EY00791	PJX-LEAD-PLUGPIN
#451	PH08305	SPEAKER GRILL 43"	ED90	EY00791	PJX-LEAD-PLUGPIN
#500	NJ05481	CATCH HOLDER HP/DP 1	EDC1	EF08281	CO-05C-C2R5-102 LOCK
#60	H390061	SPECIAL CUSHION	EDC1	EF08281	CO-05C-C2R5-102 LOCK
#80	KS00163	MIRROR GLASS (61UDX) GLASS	EDC1	EF08281	CO-05C-C2R5-102 LOCK
#83	KS02021	53UDX MODELS MIRROR	EDF1	EF21142	CONNECTOR CO-3C-C5R0-227#2NC
E001	GX00401	MAGNET-FERRITE CORE 133	EDF2	EF05941	4P CONNECTOR (L=1000 N.C#2,3)
E001	GX00401	MAGNET-FERRITE CORE 133	EDF2	EF05941	4P CONNECTOR (L=1000 N.C#2,3)
E002	2169513	COIL LX-ZCAT2032	EDF2	EF05941	4P CONNECTOR (L=1000 N.C#2,3)
E002	2169513	COIL LX-ZCAT2032	EDS1	2908917	11P CONNECTOR L=1000
E003	GY00632	CLAMP NOISE FILTER E1630MRF	EDS1	2908917	11P CONNECTOR L=1000
E003	GX00402	CLAMP FERRITE CORE	EDS1	2908917	11P CONNECTOR L=1000
E004	GY00632	CLAMP NOISE FILTER E1630MRF	EF91	2721351	FUSE HOLDER
E004	GX00402	CLAMP FERRITE CORE	EF92	2721351	FUSE HOLDER
E005	GY00632	CLAMP NOISE FILTER E1630MRF	EFC	2974086S	CONNE 4P L=160
E007	2169512	CLAMP NOISE FILTER ZCAT3035	EFP1	2721351	FUSE HOLDER
E007	2169512	CLAMP NOISE FILTER ZCAT3035	EFS	2973897S	CONNE. 9P L=1000
E10B	GX00371	MAG DBV4253M VM COIL	EFS	2973897S	CONNE. 9P L=1000
E10G	GX00371	MAG DBV4253M VM COIL	EFS	2973897S	CONNE. 9P L=1000
E10R	GX00371	MAG DBV4253M VM COIL	EFT	EF20481	CO-11C-C2R5S122
⚠ E12B	BY01551	DY-V80-7SS(0.61)L T	EFT	EF20481	CO-11C-C2R5S122
⚠ E12G	BY01551	DY-V80-7SS(0.61)L T	EFT	EF20481	CO-11C-C2R5S122
⚠ E12R	BY01551	DY-V80-7SS(0.61)L T	EGB1	2909623	7P CONNE. L=300
E203	FQ00021	DRY BATTERY(R6P-AA)	EGB2	2998593	CO-04B-B2R5-301
E2B	EZ00911	COZ-ANODE COVER SP45-S3 43"	EL	EF05933	CO-05C-F5R0-152#345NC
E2B	EZ01331	COZ-ANODE COVER ASY 53/61"	EL	EF05933	CO-05C-F5R0-152#345NC
E2G	EZ00911	COZ-ANODE COVER SP45-S3 43"	EQD1	EF03844	CO-04C-C3R9-102#3,2N
E2G	EZ01331	COZ-ANODE COVER ASY 53/61"	EQD1	EF03844	CO-04C-C3R9-102#3,2N
E2R	EZ00911	COZ-ANODE COVER SP45-S3 43"	EQD1	EF03844	CO-04C-C3R9-102#3,2N
E2R	EZ01331	COZ-ANODE COVER ASY 53/61"	EQD2	EF08291	CO-06C-C2R5-122 LOCK
E301	HL01643	RCT CLU-5713TS1 REMOTE CONTROL			

PRODUCT SERVICE NOTE: Components marked with a ⚠ have special characteristics important to sefety. Before replacing any of these components, read carefully, the PRODUCT SAFETY NOTICE of this Service Manual. Don't degrade the safety of the receiver through improper servicing.

SYMBOL NO.	PART NO.	PART DESCRIPTION
EQD2	EF08291	CO-06C-C2R5-122 LOCK
EQD2	EF08291	CO-06C-C2R5-122 LOCK
EQS1	EF08322	CO-C-C2R5-122 LOCK
EQS1	EF08322	CO-C-C2R5-122 LOCK
EQS1	EF08322	CO-C-C2R5-122 LOCK
EQS2	EF06332	CO-03C-C5R0-122 LOCK
EQS2	EF06332	CO-03C-C5R0-122 LOCK
EQS2	EF06332	CO-03C-C5R0-122 LOCK
ER	EF05953	CO-04C-F5R0-152#34NC
ER	EF05953	CO-04C-F5R0-152#34NC
ERG1	2909563	5P CONNE. L=300
ERG2	2998593	CO-04B-B2R5-301
ES1	EF02235	CO-09C-N2R0-262(PH)
ES1	EF02235	CO-09C-N2R0-262(PH)
ES3	EF02253	CO-06C-N2R0-152 (PH)
ES3	EF02253	CO-06C-N2R0-152 (PH)
ESF	2958151	CONNECTOR RE01X-X3239A901
ESF	2958151	CONNECTOR RE01X-X3239A901
ESF	2958151	CONNECTOR RE01X-X3239A901
EVC	EF00856	CONNECTOR 1P L=330
EVC	EF00856	CONNECTOR 1P L=330
EVGB	EF08811	CO-01C-F 0R0-351-1015
EVGB	EF08811	CO-01C-F 0R0-351-1015
EVGG	EF08813	1J MINI CONNECTOR-FASTON L=500MM
EVGG	EF08813	1J MINI CONNECTOR-FASTON L=500MM
EVGR	EF08814	1J MINI CONNECTOR-FASTON L=750MM
EVGR	EF08814	1J MINI CONNECTOR-FASTON L=750MM
EVMS	EF21321	CO-06C-C2R5S601#356N 53/61UDX
EVMS	EF21321	CO-06C-C2R5S601#356N
EVMS	EF21321	CO-06C-C2R5S601#356N
EZC	2973864S	CON-SEH08C-C1007A751 53/61UDX
EZC	2973864S	CON-SEH08C-C1007A751
EZC	2973864S	CON-SEH08C-C1007A751
EZV	2973744S	4J CONNE. L=750 53/61UDX
EZV	2973744S	4J CONNE. L=750
EZV	2973744S	4J CONNE. L=750
JA01	ES00211	JACK 2P VERTICAL
JM01	ES00022	3P(SW) PIN JACK WITH S
JX01	ES00281	JACK 3S/14P
JX02	ES00301	JACK 8PIN 1S/7P
N001A	MD06212	SIGNAL PWB SHIELD CASE DP1X TC-30
N001B	MD06223	SHIELD COVER DP1X SPTE
N001C	MD06223	SHIELD COVER DP1X SPTE
N101	NA49231	POWER PWB SUP.BRACKET DP0X SECC20/20E
N101BR	ND00312	CP BRACKET R/B 43"
N101BR	ND00069	CPD BRACKET RB50-3 53/61"
N101BR	ND00067	CPC BRACKET RB60-3
N101G	ND00056	CPD BRACKET GREEN
N101G	ND00056	CPD BRACKET GREEN
N102	HW91589	PRINT SPEC-H.V. BOX
N102A	H462132	LABEL BLANK 304-36
N111	3810112	HP BELLOWS STAY
N121	4738241K	ORING PRX 43"
N121	KX00361	ORING PRTX CPC 53/61"
N121	4738241	ORING PRTX
N123	KX00062	CP LENS SEAL

SYMBOL NO.	PART NO.	PART DESCRIPTION
N125	4621121	BELLOWS R
N127	4618311	O RING (P9)
N129	4618321	PAD RUBBER
N131	NA02922	CPC LENS FIX METAL
N134	4491974	PRT METAL
N154	KL00981	PRT SPRING H830091 43"
N200B	KQ00161K	LENS SASS CPC B 53UDX
N200B	KQ00811	CPD38 LENS AB ASS'Y 43UDX/61UDX
N200G	KQ00166K	LENS SASS CPC RG4 53UDX
N200G	KQ00811	CPD38 LENS AB ASS'Y 43UDX/61UDX
N200R	KQ00166K	LENS SASS CPC RG4 53UDX
N200R	KQ00811	CPD38 LENS AB ASS'Y 43UDX/61UDX
N201	QR48501	43/53/61UDX10B INST.BOOK(ENG)
N201	QR48511	43/53/61UDX10B INST.BOOK(FRN)
N202	H462163	PTV WARRANTY CARD
N202	H462273	WARRANTY CARD (F) 01
N203	H462875	V-CHIP GUIDE DP1X
N203B	KQ00821	DELTA 38 C-ELEMENT B 43"
N203B	KQ00111K	CPC-1 LENS (W) 53"
N203B	KQ00821	DELTA 38 C-ELEMENT B 61"
N203G	KQ00822	DELTA 38 C-ELEMENT G 43"
N203G	KQ00112K	CPC-1 LENS (G) 53"
N203G	KQ00822	DELTA 38 C-ELEMENT G 61"
N203R	KQ00823	DELTA 38 C-ELEMENT R 43"
N203R	KQ00113K	CPC-1 LENS (R) 53"
N203R	KQ00823	DELTA 38 C-ELEMENT R 61"
N211	H462933	EASY GRAPHIC GUIDE DP15/16
N301	9483051	COOLANT (GE-55) 43"
N301A	MD06212	SIGNAL PWB SHIELD CASE DP1X TC-30
N301B	MD06223	SHIELD COVER DP1X SPTE
N301C	MD06223	SHIELD COVER DP1X SPTE
N406	3335321	GROUNDING SPRING 43"
N601	MA01113	HEAT SINK (V) DP0X A1100P-H14
N602	4520883	3*12 SCREW WITH WASHER
N701	MA01501	H.OUT HEAT SINK DP1X A1100P-H14
N702	4520883	3*12 SCREW WITH WASHER
N711	MA01492	SIDE PIN HEAT SINK DP14 A1100P-H14
N712	4520883	3*12 SCREW WITH WASHER
N801	3763751	SK BINDER
N803	4340676	HEATSINK A6MM
N803N	4520883	3*12 SCREW WITH WASHER
N853	4340676	HEATSINK A6MM
N853N	4520883	3*12 SCREW WITH WASHER
N8A3	4340676	HEATSINK A6MM
N8A3N	4520883	3*12 SCREW WITH WASHER
NC02	3446472	HEATSINK
NC02A	4520883	3*12 SCREW WITH WASHER
NC03	MA01271	HEAT SINK TC30 H=25 TC-30
NC03A	4520883	3*12 SCREW WITH WASHER
NC04	MA01271	HEAT SINK TC30 H=25 TC-30
NC04A	4520883	3*12 SCREW WITH WASHER
NCPTB	MD06871	CPT PWB SHIELD COVER DP1X TC-30
NCPTG	MD06871	CPT PWB SHIELD COVER DP1X TC-30
NCPTR	MD06871	CPT PWB SHIELD COVER DP1X TC-30
ND91	4520883	3*12 SCREW WITH WASHER
NE24	4340676	HEATSINK A6MM

PRODUCT SERVICE NOTE: Components marked with a ⚠ have special characteristics important to sefety. Before replacing any of these components, read carefully, the PRODUCT SAFETY NOTICE of this Service Manual. Don't degrade the safety of the receiver through improper servicing.

SYMBOL NO.	PART NO.	PART DESCRIPTION
NE24N	4520883	3*12 SCREW WITH WASHER
NE25	4340676	HEATSINK A6MM
NE25N	4520883	3*12 SCREW WITH WASHER
NF01	MA01271	HEAT SINK TC30 H=25 TC-30
NF02	MA01271	HEAT SINK TC30 H=25 TC-30
NF03	4520883	3*12 SCREW WITH WASHER
NF04	4520883	3*12 SCREW WITH WASHER
NF91	MA01292	POWER SUPPLY PWBHEATSINK DP1XA1100P-H14
NF96	4348491	G8 HEAT SINK
NFP1	MA01521	HEAT SINK DP1X (A) A1100P-H14
NFP4	MC00105	HEAT SINK P10 H45 17 WHITE A6063S-T5
NFP5	MC00105	HEAT SINK P10 H45 17 WHITE A6063S-T5
NFP6	4348491	G8 HEAT SINK
NH01	MA01511	H.V.OUT HEAT SINK DP1X A1100P-H14
NH02	4520883	3*12 SCREW WITH WASHER
NH03	2786282	MICA SHETT (T0-3P)
NH04	2786301	TRANSISTOR SPACER (TO-3P)
NH11	PH09971	FBT HOLDER HP/DP PS(UL94V-0)
NH12	4519505	3*16 B-TITE SCREW
NI91	4520883	3*12 SCREW WITH WASHER
NJ01	MA01411	AUDIO HEAT SINK HP/DP1X W80 A1100P-H14
NJ01A	4520883	3*12 SCREW WITH WASHER
NK01	MA01271	HEAT SINK TC30 H=25 TC-30
NK02	MA01271	HEAT SINK TC30 H=25 TC-30
NK03	4520883	3*12 SCREW WITH WASHER
NK04	4520883	3*12 SCREW WITH WASHER
NK05	MC00481	CONV. HEAT SINK DP06A A6063S-T5
NK06	4520885	3*16 SCREW WITH WASHER
NK10	3813121	LEAD CLAMPER 2135 PA
NM71	3816161	HOLDER (S)
NM72	NJ01171	LED HOLDER A5WS
NP4N	4520883	3*12 SCREW WITH WASHER
NP5N	4520883	3*12 SCREW WITH WASHER
NPDN	4520883	3*12 SCREW WITH WASHER
NPF1	9451138	UL FR-1 TUBE NO.3
NPF2	3763751	SK BINDER
NPIN	4520883	3*12 SCREW WITH WASHER
NX91	2784342	CONDENSER COVER
P801	ED03173	3P MINI CONNE.PLUG TV-50P-03V3
P802	2661756	1P PLUG PIN WITH BASE
P851	ED03173	3P MINI CONNE.PLUG TV-50P-03V3
P852	2661756	1P PLUG PIN WITH BASE
P8A1	ED03173	3P MINI CONNE.PLUG TV-50P-03V3
P8A2	2661756	1P PLUG PIN WITH BASE
PA	ED01851	PLUG 5289-2A
PAQ	ED00383	PLUG 4P JST2.5ROCK
PAQ1	ED00383	PLUG 4P JST2.5ROCK
PBV	2661751	2P PLUG PIN WITH BASE
PCB	ED03174	4P MINI CONNE.PLUG TV-50P-04V3
PCG	ED03174	4P MINI CONNE.PLUG TV-50P-04V3
PCR	ED03174	4P MINI CONNE.PLUG TV-50P-04V3
PCV	2902264	PLUG PIN SUB MINI 5P
PDC	ED03205	9P 2.5MM PITCH CONNECTOR TAC-L09X-A3
PDC1	ED00384	PLUG 5P LOCK 2.5MM JST
PDF1	ED01592U	PLUG CP-03BP5R0VU-TBL-LOCK
PDF1	ED01592U	PLUG CP-03BP5R0VU-TBL-LOCK
PDF2	ED01596U	PLUG CP-04BP5R0VU-TBL#2,3N
PDG	ED03212	15P 2.5MM PITCH CONNECTOR TAC-L15X-A3
PDK1	ED01471U	PLUG 07BP1R2HUTWGP-A1
PDK1	ED01491U	7P PLUG PIN
PDK3	ED01472U	PLUG 11BP1R2HUTWGP-A1
PDK3	ED01492U	CONNECTOR 11BS1R2VUTWGX-A1
PDK4	ED01471U	PLUG 07BP1R2HUTWGP-A1
PDK4	ED01491U	7P PLUG PIN
PDKP	ED01472U	PLUG 11BP1R2HUTWGP-A1
PDKP	ED01492U	CONNECTOR 11BS1R2VUTWGX-A1
PDS	ED03205	9P 2.5MM PITCH CONN TAC-L09X-A3 (53/61UDX)
PDS1	2959061	PINPOST 11P PH
PFC	2902263	PLUG PIN SUB MINI 4P
PFC1	ED01782	22P PLUG PIN
PFC2	ED01782	22P PLUG PIN
PFS	2902268	PLUG PIN SUB MINI 9P
PFS	2902248	PLUG PIN SUB MINI9P
PFSH	2959055	CONNECTOR-6P(PH)
PFT	2902251	11P PLUG PIN
PFT	2902251	11P PLUG PIN
PGV	2661751	2P PLUG PIN WITH BASE
PJIG	2902266	PLUG PIN SUB MINI 7P
PL	ED03175	5P MINI CONNE.PLUG TV-50P-05V3
PMB	ED01597U	PLUG CP-06BP5R0VU-TBL#3,5N
PMG	ED01597U	PLUG CP-06BP5R0VU-TBL#3,5N
PMR	ED01597U	PLUG CP-06BP5R0VU-TBL#3,5N
PQD1	ED02801	2P PLUG PIN
PQD2	ED00385	PLUG 6P LOCK 2.5MM JST
PQS1	ED00388	PLUG 9P LOCK 2.5MM JST
PQS2	ED01852	PLUG 5289-3A
PR	ED03174	4P MINI CONNE.PLUG TV-50P-04V3
PRST	2902261	PLUG PIN SUB MINI 2P
PRV	2661751	2P PLUG PIN WITH BASE
PS1	2959058	PINPOST 9P PH
PS3	2959055	CONNECTOR-6P(PH)
PSD1	ED01471U	PLUG 07BP1R2HUTWGP-A1
PSD1	ED01491U	7P PLUG PIN
PSD2	ED01472U	PLUG 11BP1R2HUTWGP-A1
PSD2	ED01492U	CONNECTOR 11BS1R2VUTWGX-A1
PSD3	ED01472U	PLUG 11BP1R2HUTWGP-A1
PSD3	ED01492U	CONNECTOR 11BS1R2VUTWGX-A1
PST1	ED03216	20P 2.5MM PITCH CONNECTOR TAC-L20X-A3
PST1	ED03196	20P 2.5MM PITCH PLUG TAC-L20P-A3
PST2	ED03216	20P 2.5MM PITCH CONNECTOR TAC-L20X-A3
PST2	ED03196	20P 2.5MM PITCH PLUG TAC-L20P-A3
PST3	ED03216	20P 2.5MM PITCH CONNECTOR TAC-L20X-A3
PST3	ED03196	20P 2.5MM PITCH PLUG TAC-L20P-A3
PSU1	ED03216	20P 2.5MM PITCH CONNECTOR TAC-L20X-A3
PSU1	ED03196	20P 2.5MM PITCH PLUG TAC-L20P-A3
PSU2	ED03216	20P 2.5MM PITCH CONNECTOR TAC-L20X-A3
PSU2	ED03196	20P 2.5MM PITCH PLUG TAC-L20P-A3
PTSB	2902261	PLUG PIN SUB MINI 2P
PTSG	2902261	PLUG PIN SUB MINI 2P
PTSR	2902261	PLUG PIN SUB MINI 2P
PVC1	2661756	1P PLUG PIN WITH BASE
PVC2	2661756	1P PLUG PIN WITH BASE

PRODUCT SERVICE NOTE: Components marked with a ⚠ have special characteristics important to sefety. Before replacing any of these components, read carefully, the PRODUCT SAFETY NOTICE of this Service Manual. Don't degrade the safety of the receiver through improper servicing.

SYMBOL NO.	PART NO.	PART DESCRIPTION	SYMBOL NO.	PART NO.	PART DESCRIPTION
PVM	2902265	PLUG PIN SUB MINI 6P			
PVMS	2902265	PLUG PIN SUB MINI 6P			
PVS1	ED03173	3P MINI CONNE.PLUG TV-50P-03V3			
PVSB	2902263	PLUG PIN SUB MINI 4P			
PVSG	2902263	PLUG PIN SUB MINI 4P			
PVSR	2902263	PLUG PIN SUB MINI 4P			
PZC	2902267	PLUG PIN SUB MINI 8P			
PZC	2902267	PLUG PIN SUB MINI 8P			
PZV	2902263	PLUG PIN SUB MINI 4P			
PZV	2902263	PLUG PIN SUB MINI 4P			
W801	EK00061	WIRE (PROCESSED)			
W802	2692463	CONNECTOR FOR FOCUS			
W851	EK00061	WIRE (PROCESSED)			
W852	2692463	CONNECTOR FOR FOCUS			
W8A1	EK00062	WIRE (PROCESSED) FOR SCREEN			
W8A2	2692464	CO-01C-N0R0-821FOCUS			
DP-15, 53UDX10B / 61UDX10B					
RK42	**AT03202S**	**RESISTOR, 3.3 OHM, 1 W**			
RK46	**AT03195S**	**RESISTOR, 1.8 OHM, 1 W**			
RK50	**AT03202S**	**RESISTOR, 3.3 OHM, 1 W**			
RK54	**AT03195S**	**RESISTOR, 1.8 OHM, 1 W**			
RK58	**AT03204S**	**RESISTOR, 3.9 OHM, 1 W**			
RK62	**AT03197S**	**RESISTOR, 2.2 OHM, 1 W**			
DP-15E, 43FDX10B / 43FDX11B					
RK42	**AT03202S**	**RESISTOR, 3.3 OHM, 1 W**			
RK46	**AT03193S**	**RESISTOR, 1.5 OHM, 1 W**			
RK50	**AT03199S**	**RESISTOR, 2.7 OHM, 1 W**			
RK54	**AT03193S**	**RESISTOR, 1.5 OHM, 1 W**			
RK58	**AT03204S**	**RESISTOR, 3.9 OHM, 1 W**			
RK62	**AT03195S**	**RESISTOR, 1.8 OHM, 1 W**			

Quick Reference Parts List

NO.	CIRC.#	PART NO.	DESCRIPTION	PWB ASS'Y	FUNCTION
1	I001	CP07166U	MAIN MICRO	SIGNAL	TV u-com "HZ"
2	I002	CP06941R	PST9941	SIGNAL	RESET IC (+3.3V)
3	I003	CK35894R	CAT24WC32J1	SIGNAL	E2PROM
4	I004	CK09541R	HD74HCT245T	SIGNAL	3.3V->5.0V BUFFER
5	I005	CK31992R	BU4053BCF-E2	SIGNAL	MAIN/SUB SELECTOR
6	I006	CK31071R	CXA1875AM	SIGNAL	EXT DAC1
7	I007	CK31071R	CXA1875AM	SIGNAL	EXT DAC2
8	I301	CK09013U	UPD64082GF-3BA	SIGNAL	3D Y/C SEP.
9	I302	CK06097R	PST9127NR	SIGNAL	RESET IC FOR I301
10	I303	CK35321R	MSM514265E-60J3	SIGNAL	4M DRAM FOR I301
11	I501	CK07923U	TA1270BF	SIGNAL	MAIN VIDEO/CHROMA
12	I502	CK35501R	NJM2284M-TE1	SIGNAL	VIDEO SWITCH
13	I503	CK01172R	HD74HC221FP-TR	SIGNAL	S PULSE GENERATOR
14	IC01	CP07281U	TA1316AN	SIGNAL	RGB PRO./DEF CONT.
15	IC02	CP07611	NJM7805FA	SIGNAL	SW +5V REG
16	IC03	CP04232	BA033T	SIGNAL	SW +3.3V REG
17	IC04	CP06581U	LF25CV	SIGNAL	SW +2.5V REG
18	IJ01	2004751	TA8200AH	SIGNAL	FRONT AUDIO OUT
19	IX01	CK30941U	CXA2069Q	TERMINAL	A/V SELECTOR
20	IX02	CW00022	UGL-337KNT	TERMINAL	2L COMB FOR SUB
21	IX03	CK07923U	TA1270BF	TERMINAL	VIDEO/CHROMA FOR SUB
22	IX04	CK35371U	CXA2151Q	TERMINAL	YPBYR SEL. FOR MAIN
23	IX05	CK35371U	CXA12141Q	TERMINAL	YPBYR SEL FOR SUB
24	IX06	CK31992R	BU4053BCF-E2	TERMINAL	HOR. SYNC SEL
25	IX07	CK31992R	BU4053BCF-E2	TERMINAL	VER. SYNC SEL.
26	IX08	2015452R	HD74HC04FPEL	TERMINAL	INVERTER
27	IX09	CK01172R	HD74HC221FP-TR	TERMINAL	YS PULSE GENERATOR
28	I601	CP06891	TDA8174A	DEFLECTION	VER. DEF OUTPUT
29	I701	2352505	NJM4558D	DEFLECTION	GAIN AMP
30	IH01	CP07091	M62501P	DEFLECTION	HIGH VOLTAGE CONT.
31	IP01	CZ00865	STR-F6629B (LF1351)	DEFLECTION	SWITCHING REGULATOR IC
32	IP02	CP05431	TLP621(D4-GRL-LF2)	DEFLECTION	OPT. ISOLATOR
33	IP03	2391343	SE115N	DEFLECTION	+B REGULATOR IC
34	IP04	2004665F	PQ09RF2B	DEFLECTION	+9V REGULATOR
35	IP05	2004666F	PQ05RF2B	DEFLECTION	+5V REGULATOR
36	IP06	CP06141	PQ6RD083	DEFLECTION	+6.V REGULATOR
37	I901	CP07821U	STR-G6632	POWER	SWITCHING REGULATOR IC
38	I901	CP07823U	STR-G6623	POWER	SWITCHING REGULATOR IC
39	I902	CP05431	TLP621(D4-GRL-LF2)	POWER	OPT. ISOLATOR
40	I903	CP05431	TLP621(D4-GRL-LF2)	POWER	OPT. ISOLATOR
41	I904	CP05431	TLP621(D4-GRL-LF2)	POWER	OPT. ISOLATOR
42	I906	CP07614	NJM7809FA	POWER	+9V REGULATOR
43	IK01	CP07611	HNM7805FA	CONV./FOCUS	+5V REGULATOR
44	IK02	CP01531R	PST9142-T	CONV./FOCUS	RESET IC FOR DCU
45	IK04	CZ00432	STK392-120	CONV./FOCUS	CONV. AMP.
46	IK05	CZ00432	STK392-120	CONV./FOCUS	CONV. AMP.
47	IA01	CK35262R	NJW1132AM	TRUS/SRS	VOLUME CONT. W/ BBE
48	IA02	CK35451R	NJM2198M	TRUS/SRS	SRS
49	EANT	HP00771	ANT SW BOX	MAIN CHASSIS	ANT SW BOX
50	U501	HC00511	ENGE6106D	SIGNAL	1ST TUNER W/MTS
51	U502	HC00462	ENG36614G	SIGNAL	2ND TUNER
52	UC01	CS00493	HC5613	SIGNAL	FLEX CONTROLLER
53	UKDG	CS00453	HC2153	CONV./FOCUS	DCU (MAGIC-S/9P)
54	HM01	CZ00641	GP1U281Q	CONTROL	I/R RECEIVER

53UDX10B / DP15
53UDX10BA / DP15

CS00453	DCU
CS00493	FLEX CONVERTER
JT22013	SIGNAL PWB
JT22023	TERMINAL PWB
JT22033	POWER DEFLECTION PWB
JT22043	POWER PWB
JT22053	CONV OUT PWB
JT22063	CRT PWB
KR00277	SCREEN ASSEMBLY
UE08643	DP15 CHASSIS
UE08951	RED CRT
UE08952	GREEN CRT
UE08953	BLUE CRT
X480235	SRS PWB
X480261	CONTROL PWB

61UDX10B / DP15

CS00453	DCU
CS00493	FLEX CONVERTER
JT22013	SIGNAL PWB
JT22023	TERMINAL PWB
JT22033	POWER DEFLECTION PWB
JT22043	POWER PWB
JT22053	CONV OUT PWB
JT22063	CRT PWB
KR01078	SCREEN ASSEMBLY
UE08643	DP15 CHASSIS
UE09191	RED CRT
UE09192	GREEN CRT
UE09193	BLUE CRT
X480235	SRS PWB
X480261	CONTROL PWB

43FDX10B / DP15E

CS00453	DCU
CS00493	FLEX CONVERTER (HC5613)
CS00553	FLEX CONVERTER (HC5613T)
JT22011	SIGNAL PWB
JT22021	TERMINAL PWB
JT22031	POWER DEFLECTION PWB
JT22041	POWER PWB
JT22051	CONV OUT PWB
JT22061	CPT PWB
JT22071	SURROUND PWB
KR01077	SCREEN ASSEMBLY
UE07781	RED CRT
UE07782	GREEN CRT
UE07783	BLUE CRT
UE08641	DP15E CHASSIS
X480234	CONTROL PWB

43FDX11B / DP15E

CS00453	DCU
CS00493	FLEX CONVERTER (HC5613)
CS00553	FLEX CONVERTER (HC5613T)
JT22011	SIGNAL PWB
JT22021	TERMINAL PWB
JT22031	POWER DEFLECTION PWB
JT22041	POWER PWB
JT22051	CONV OUT PWB
JT22061	CPT PWB
JT22071	SURROUND PWB
KR01074	SCREEN ASSEMBLY
UE07781	RED CRT
UE07782	GREEN CRT
UE07783	BLUE CRT
UE08641	DP15E CHASSIS
X480234	CONTROL PWB

HITACHI