Digital Satellite Receiver ***SERVICE MANUAL***

SAT-50200 FTA

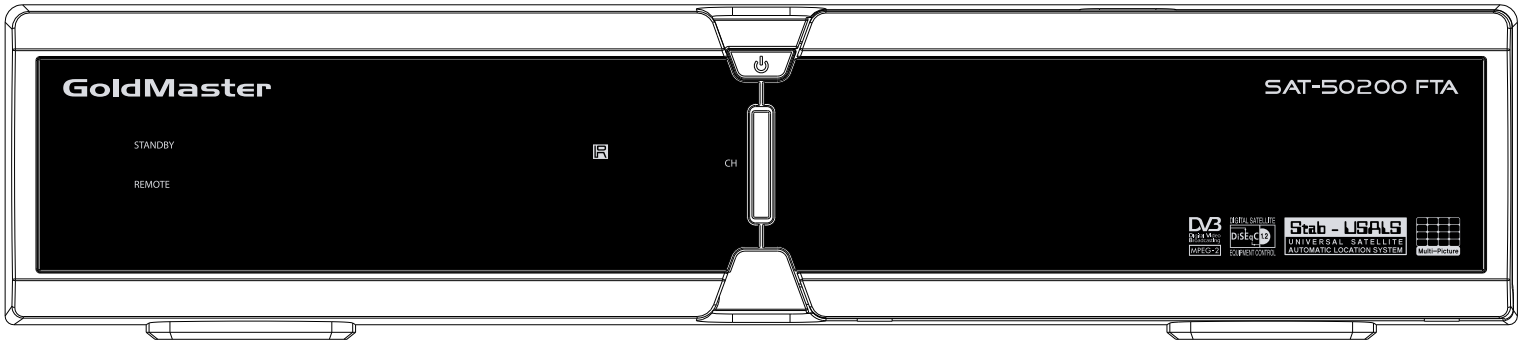

GoldMaster

CONTENTS

1. BLOCK DIAGRAM **3**
2. TECHNICAL SPECIFICATION **4**
3. TROUBLESHOOTING **6**
3.1 Exterior Inspection 6
3.2 Power Test 6
3.3 System Test 7
3.4 MPEG and A/V Test 9
3.5 Channel Test 12
3.6 USB Test 13
4. SCHEMATICS **14**
4.1 Main Board 14
4.2 Front Board 21
4.3 USB Sub-Board 22
5. BILL OF MATERIALS **23**
6. GERBER DATA **28**
6.1 Main Board 28
6.2 Front Board 29
6.3 USB Sub-Board 30

1. BLOCK DIAGRAM

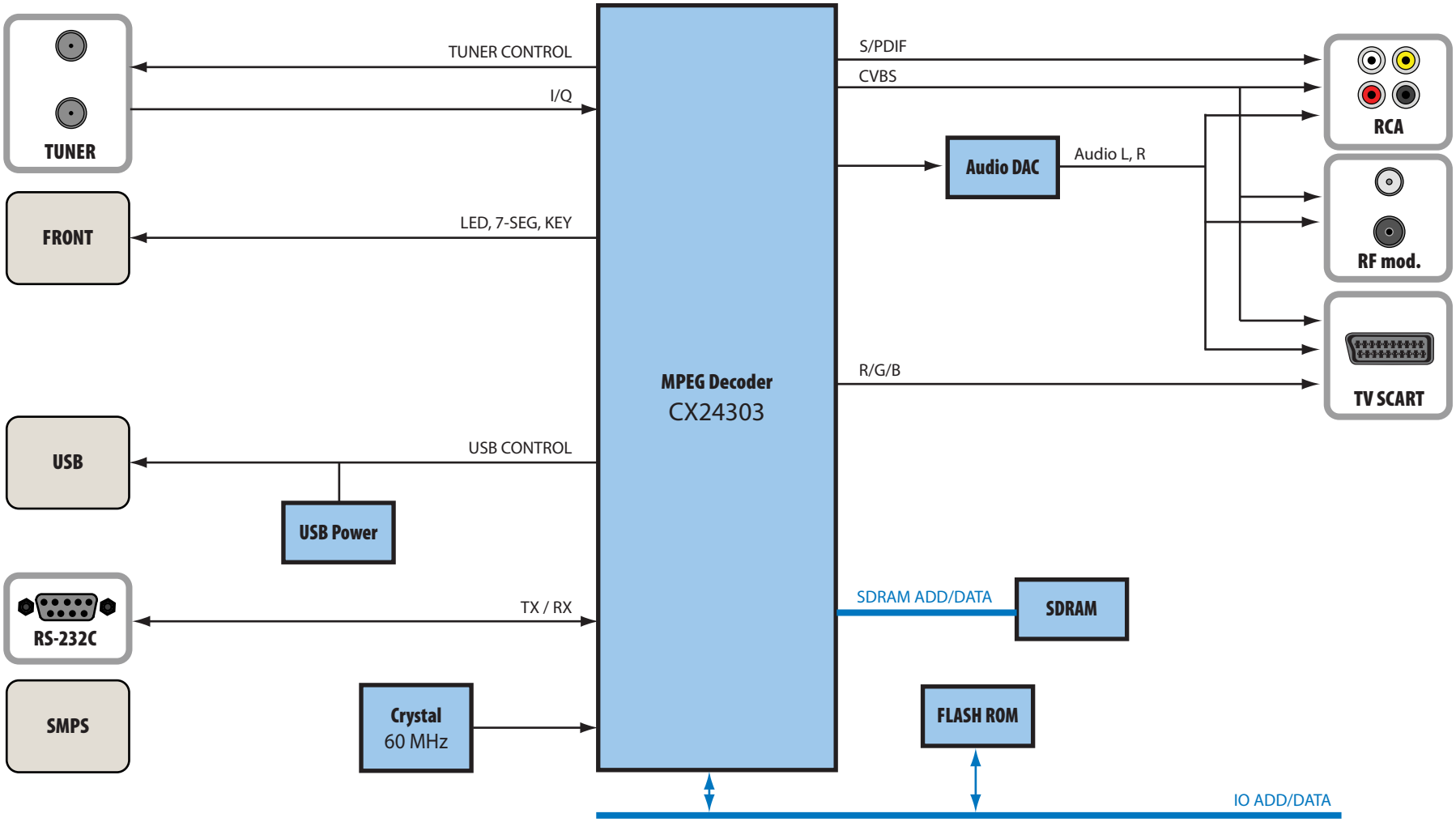

2. TECHNICAL SPECIFICATION

Tuner & Channel Decoder

Input Connector	F-type, IEC 169-24, Female
Loop through out	F-type, IEC 169-24, Female
Frequency Range	950MHz ~ 2150MHz
Input Impedance	75Ω, unbalanced
Signal Level	-65 to -25dBm
LNB Power	13/18VDC, max.400mA
22KHz Tone	(22±2)KHz, (0.6±0.2)V
DISEqC Control	V1.0/1.2/USALS Compatible
Demodulation	QPSK
Input Symbol Rate	2 ~ 45 Ms/s
FEC Decoder	1/2, 2/3, 3/4, 5/6 and 7/8 with Constraint Length K=7

MPEG Transport Stream A/V Decoding

Transport Stream	MPEG-II ISO/IEC 13818
Profile Level	MPEG-II MP@ML
Input Rate	Max. 15Mbit/s
Video Formats	4:3 LetterBox, 4:3 PanScan, 16:9
Video Resolution	720 x 576, 720 x 480
Audio Decoding	MPEG/MusiCam Layer Ⅰ & Ⅱ
Audio Mode	Stereo/Joint stereo/Mono
Sampling Rate	32KHz, 44.1KHz and 48KHz

Main System

Main Processor	Conexant Virgo (32-bit RISC CPU 180 MIPS)
Memory	Flash-ROM : 2 MBytes SDRAM : 16 MBytes

Audio / Video & Data IN/OUT

TV SCART	RGB, CVBS Video Output Audio L, R Output
RCA	CVBS Video Output Audio L, R Output SPDIF Output
RS-232C	9 pin D-SUB (Male) type, Transfer rate 115Kbps
USB	USB 2.0 Support

RF Modulator

RF Connector	75Ω, IEC 169-2, Male/Female
Frequency	470MHz ~ 860MHz
Output Channel	CH 21~69 for the Remodulator
TV Standard	PAL G/I/K Selectable by Menu
Preset Channel	CH 36 (or TBD) Software changeable by Menu

Front Panel

Slot	1 USB Host Slot
Buttons	3 Buttons (CH UP/DOWN, STANDBY)
Display	7-Segment (Channel No. or Time)
Indicators	2 LEDs (STANDBY, REMOTE)

Power Supply

Input Voltage	AC 100 ~ 250V, 50/60Hz
Type	SMPS
Power Consumption	Max. 20W
Standby Power	Max. 8W
Protection	Separate Internal Fuse & Lighting protection

Physical Specification

Size (W x H x D)	260mm X 55mm X 210mm
Weight (Net)	1.2Kg
Operating Temp.	0°C ~ +45°C
Storage Temp.	-10°C ~ +70°C

3. TROUBLESHOOTING

3.1 Exterior Inspection

Check the condition of install, joining of connectors, broken or bending PCB, cold-soldering or short of components and problem of part, etc.

3.2 Power Test

Symptom : The STB doesn't work and there's no action in front display.
Concerned Part : SMPS

Solution :

- Check the main power cable and check that it is plugged into a suitable power outlet.

- Check you have switched the STB main power switch ON at the rear or the STB.

- Check the power supply from SMPS. At **CN901**, the normal voltage of each pin is shown below. If there's no voltage or incorrect value(±10%), replace SMPS.

Pin No.	Value(Voltage)
Pin 1	3.3
Pin 2	Ground(0)
Pin 3	5
Pin 4	8
Pin 5	12
Pin 6	Ground(0)
Pin 7	24

3.3 System Test

Symptom : The STB doesn't boot or intermittently acting after power on.
Concerned Part : Crystal(**X101**)

Solution :

- Basically, the STB uses 60.000MHz Crystal clock. CPU(**U100**) gets 60.000MHz system clock, and then generates other clocks for system use. If this clock is abnormal, the STB doesn't work correctly.

- To verify this clock, check **R126**.

- If the waveform of the clock is unlike as shown below, it is possible that crystal(**X101**) is damaged. Check components near the crystal(that is **R126, C112, C113, C114** and **L101**), soldering state, direction of part insertion etc. If you can't find any problem, replacement of crystal is required.

60.000MHz CLOCK
Check Point : R126

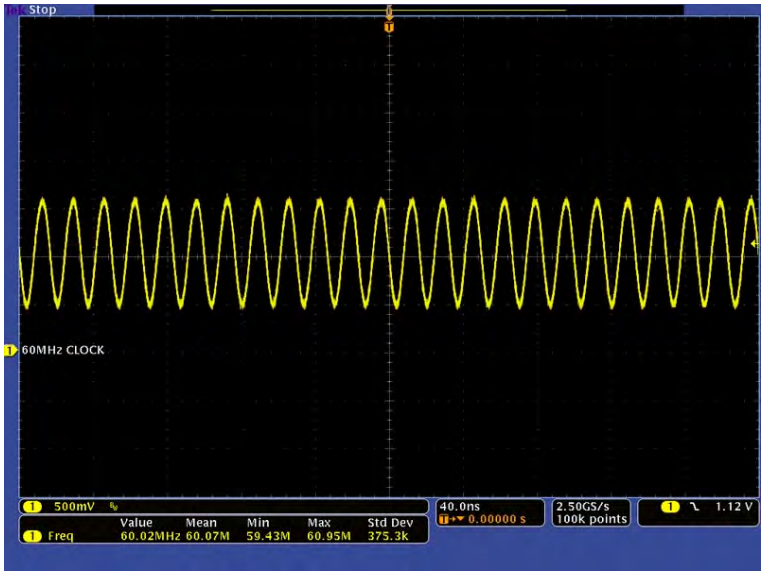

Symptom : The STB doesn't boot or intermittently acting after power on.
Concerned Part : CPU(**U100**), Flash ROM((**U501**), SDRAM(**U502**)

Solution :

- Generally, STB starts boot sequence after that power is on. If power supply of a STB is normal and the set doesn't start boot sequence, it is possible that signals between CPU and Flash ROM or CPU and SDRAM are abnormal.

- Check the reset and chip enable signal of Flash ROM(**U502**).
  And check the clock of SDRAM(**U501**).

- Or, you can solder again major ICs concerned with boot sequence. That is, CPU(**U100**), Flash ROM(**R502**) and SDRAM(**U501**). Be cautious, when replacing or re-soldering components. The static of soldering may damage the components. Check the general install, soldering condition and wrong or reverse insertion of parts.

RESET
Check Point :
Pin 12 of U502

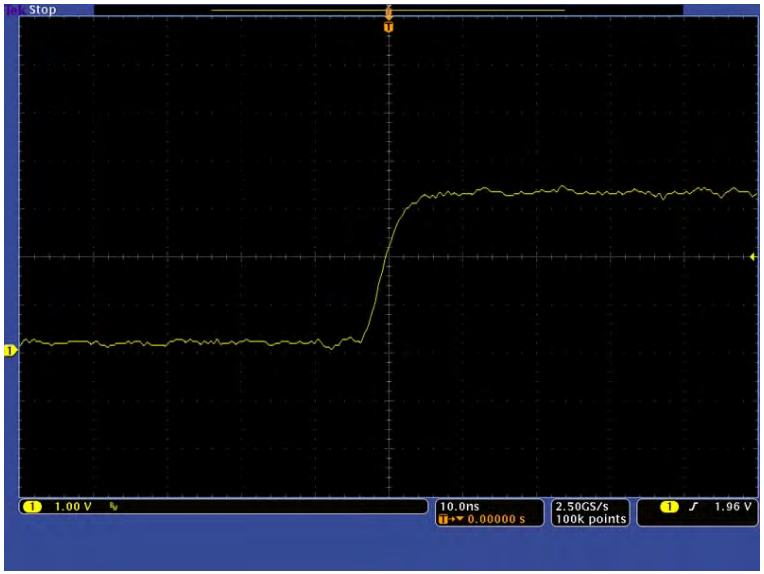

CHIP SELECT
Check Point :
Pin 26 of U502

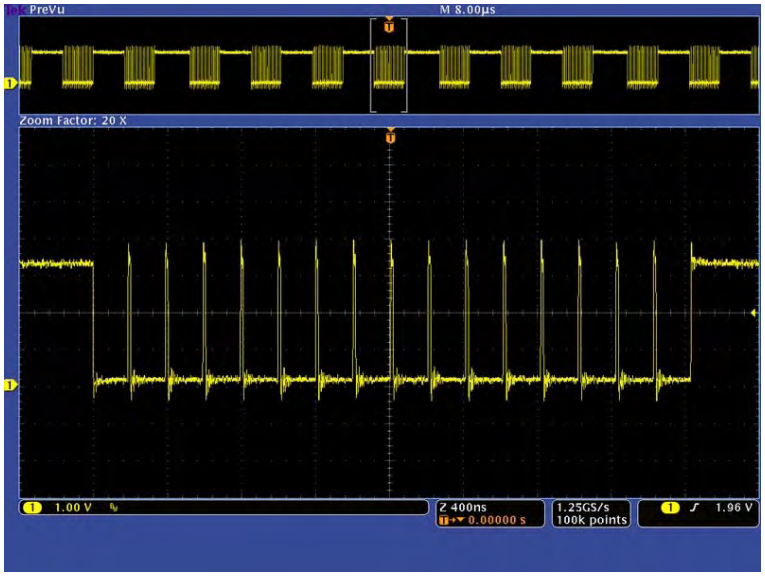

SDRAM CLOCK
Check Point : R514

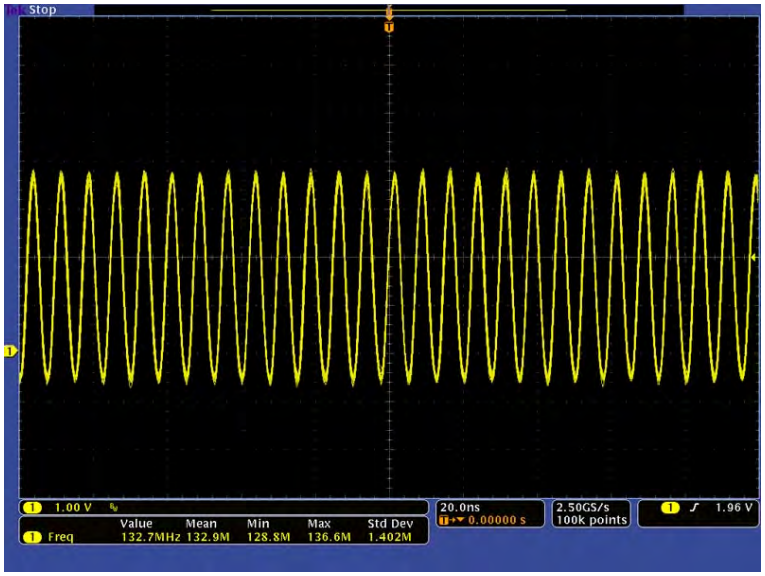

Symptom : The STB doesn't boot and display error message in front panel.
Concerned Part : Flash ROM((**U501**)

Solution :

- If the STB doesn't boot and display error message(E-01, E-10, E-12 etc.) in front panel, it is possible that the software in the STB is wrong. In this case, you have to update suitable software.

- When you want to download new software, just follow below directions

  (1) Connect a RS-232 cable between your STB and PC.
  (2) Execute software download program in your PC that is offered by manufacture.
  (3) Click on 'Open file' to select firmware which will be download and select suitable IRD file.
  (4) Click on 'Download'.
  (5) Power on your STB, then software downloading procedure start automatically.

- There's an alternative way to download software. If you have a external USB memory stick, you can update software via USB.

  (1) Copy new software to USB memory device.
  (2) Power on your STB.
  (3) Insert USB memory device to USB slot of STB. Then pop-up window will be shown.
  (4) Select the software what you want to download and press OK button in your remote controller. Then software downloading procedure starts automatically.

3.4 MPEG and A/V Test

Symptom : Any of video output is abnormal or there's no video output.
Concerned Part : MPEG Decoder(**U100**)

Solution :

- MPEG decoder has several video outputs. That is CVBS and Component Video (R/G/B). Check the video signals as shown below using 100% color bar.

CVBS
Check Point : L404

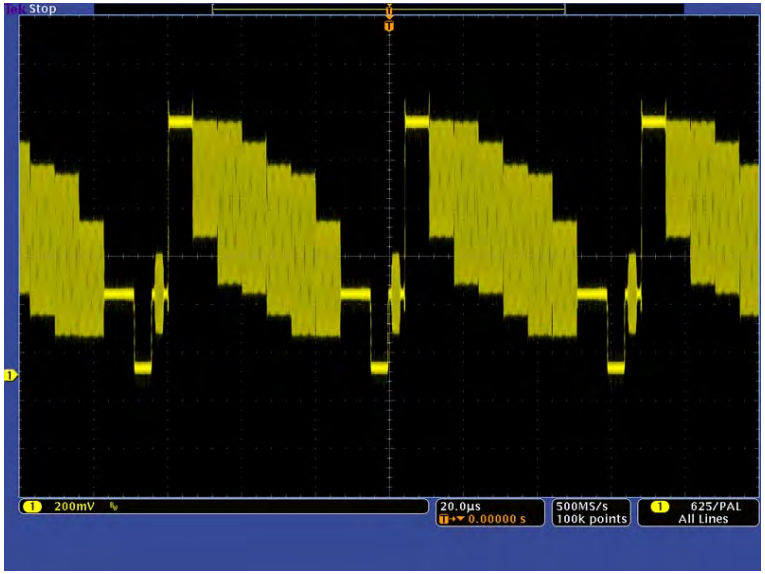

R
Check Point : L403

G
Check Point : L402

B
Check Point : L401

- If there's no video signal at above check points, it's possible that MPEG decoder(**U100**) is damaged. In this case, replace MPEG decoder.

- If all the waveforms are OK, but still STB has no video in any output port, check the components that is related to RCA, RF, SCART jack.

Symptom : Screen shows seriously broken image or freezing image.
Concerned Part : SDRAM(**U502**)

Solution :

- Basically, MPEG decoder uses SDRAM as temporary memory. Therefore, abnormal working of SDRAM causes broken screen or freezing screen. In this case, check the SDRAM control signal as below.

- SDRAM is also concerned with boot sequence. If there's any problem with SDRAM, there's a possibility of booting failure.(Refer to **3.3 System Test**)

SDRAM Chip select
Check Point :
Pin 19 of U502

SDRAM CLOCK
Check Point : R514

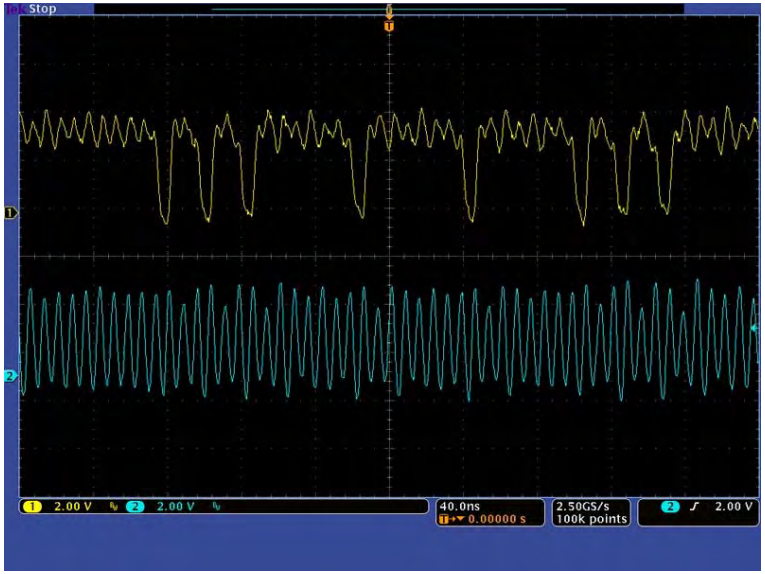

- The SDRAM clock frequency is about 133MHz. If the above signals are okay, examine the signal for all address and data pins of SDRAM. If you can't find any problem with this examination, check the short of pins, soldering state and cold-soldering, etc.

- Replacing the SDRAM should be the last option.

Symptom : There's no audio.
Concerned Part : Audio DAC(**U301**)

Solution :

- If there's no audio(RF modulator or RCA jack), check digital audio data input to audio DAC(**U301**).

- If the audio main clock XCLK(8.192~12.288MHz) is acting unstably, check the soldering state of CPU(**U100**). And check the clock(60.000MHz) of crystal(**X101**). If CPU and crystal are okay, then check the signals into audio DAC(**U301**). All signals to audio DAC are likely to as shown below.

LR Clock
Check Point :
Pin 3 of U301

Serial DATA
Check Point :
Pin 1 of U301

BCLK
Check Point :
Pin 2 of U301

XCLK
Check Point :
Pin 4 of U301

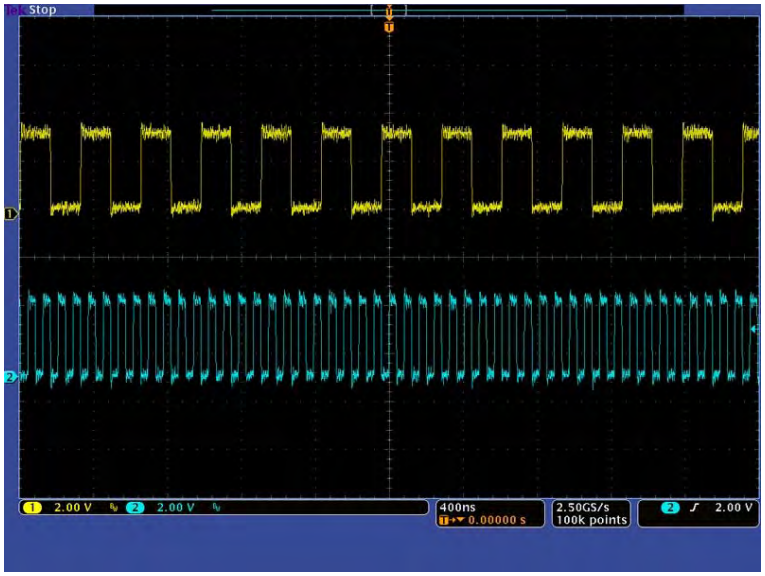

- If the signals into audio DAC are not much the same as above shape, CPU can be replaced. These signals are all correct, but there's no audio, you can check the output of audio DAC. The picture below shows the output waveform of audio DAC at normal operation.

Audio Left
Check Point :
Pin 5 of U301

Audio Right
Check Point :
Pin 8 of U301

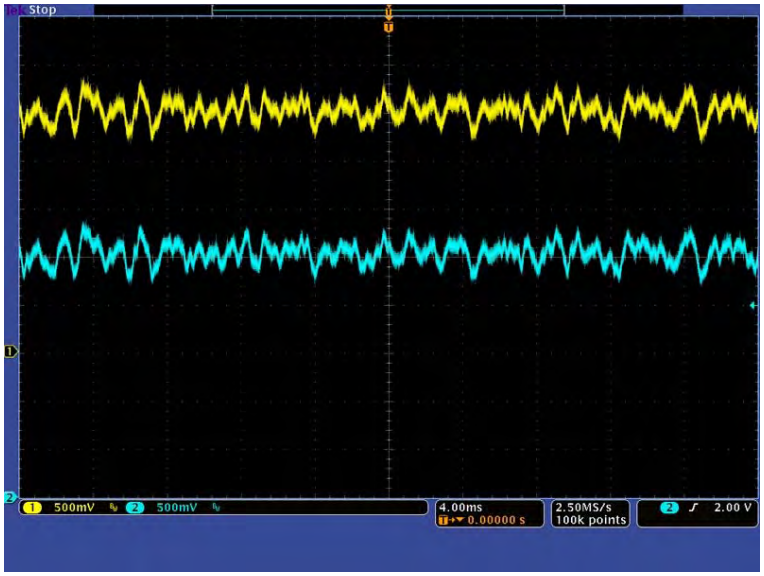

- If there are no signals, audio DAC maybe damaged. Then you can try to replace the audio DAC. If the output of audio DAC is normal, trace the route of analog audio signal from audio DAC output to RF modulator, RCA jack.

- Like video, audio is a part of analog. So, most failures are probably found in soldering and poor components.

3.5 Channel Test

Symptom : You can't scan channels and antenna signal level or quality is very low.
Concerned Part : Tuner(**TU101**)

Solution :

- First of all, make sure that your antenna setting is correct and antenna cable is connected correctly. If that is okay, check below points of LNB power control part.

  a. 14V(vertical) or 18V(horizontal) at **BD101**
  → If there's no voltage, check **U101**.
  b. 3.3V at **BD102, BD103**
  → If there's no voltage, check **U102**.

- If all of these powers are correct and the STB still have problem, check all of signals associated with tuner. Refer to below check points.

Pin 1 : LNB B voltage(14V or 18V)
Pin 2 : LNB A voltage(14V or 18V)
Pin 3 : 3.3V supply for LNA(3.3V)
Pin 4 : 3.3V supply for tuner(3.3V)
Pin 5 : Q channel output.
Pin 6 : I channel output.
Pin 7 : AGC control input.(about 1.3V)
Pin 8 : I2C data(3.3V pk-to-pk)
Pin 9 : I2C clock(3.3V pk-to-pk)
Pin 10 : Clock reference output

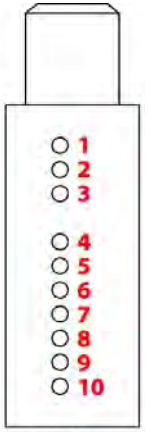

BOTTOM VIEW

- The waveforms of each pin are shown below.

Q output
Check Point :
Pin 5 of TU101

I output
Check Point :
Pin 6 of TU101

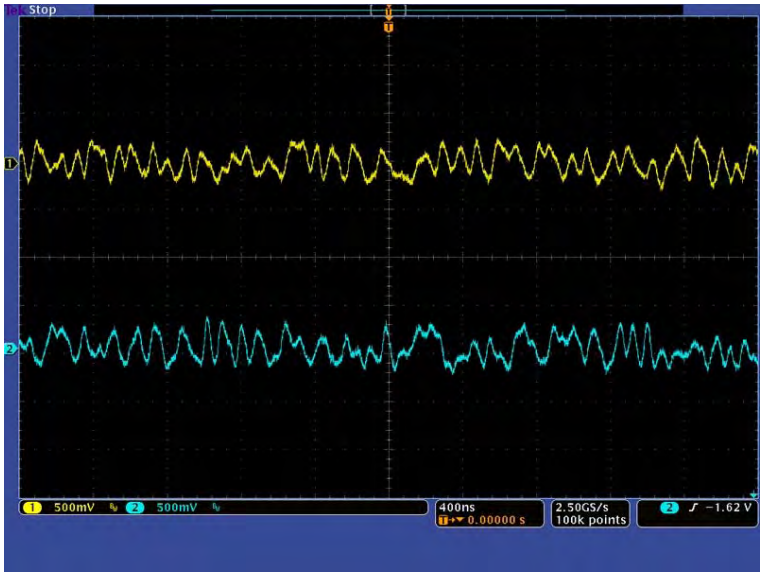

I2C DATA
Check Point :
Pin 8 of TU101

I2C CLOCK
Check Point :
Pin 9 of TU101

CLOCK OUT
Check Point :
Pin 10 of TU101

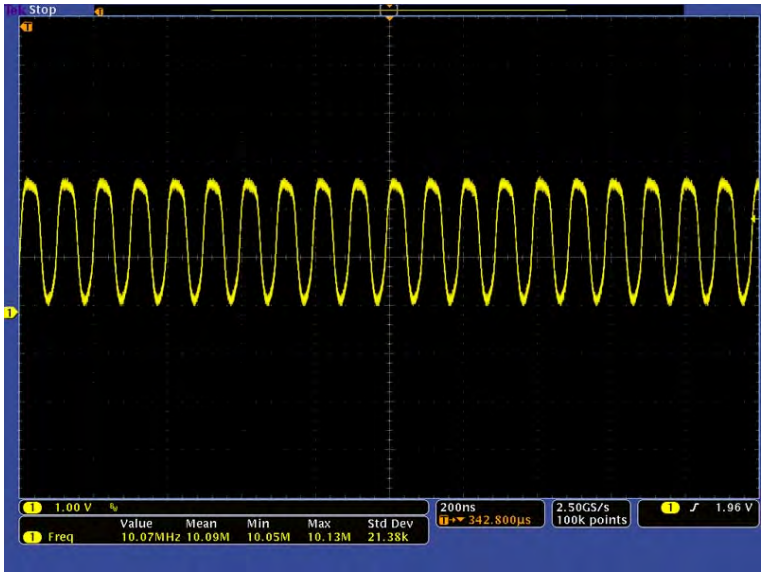

- Any of these signal is unlike with reference, check the trace of associate value. All these values are correct, it is possible that tuner is damaged. In this case, replace the tuner.

3.6 USB Test

Symptom : STB can't detect external USB device.
Concerned Part : USB sub-board

Solution :

- USB external devices(memory stick or external HDD) must meet below requirements.
  a. Since the STB supports FAT32 and FAT16 file systems, you must format USB device with FAT32 or FAT16 file system before use.
  b. It is possible that some HDD operates malfunction due to insufficient power. In this case, connect DC power cable or auxiliary power cable.

- If all requirements shown above but still have problem with USB devices, replace USB sub-board.

4. SCHEMATICS

4.1 Main Board

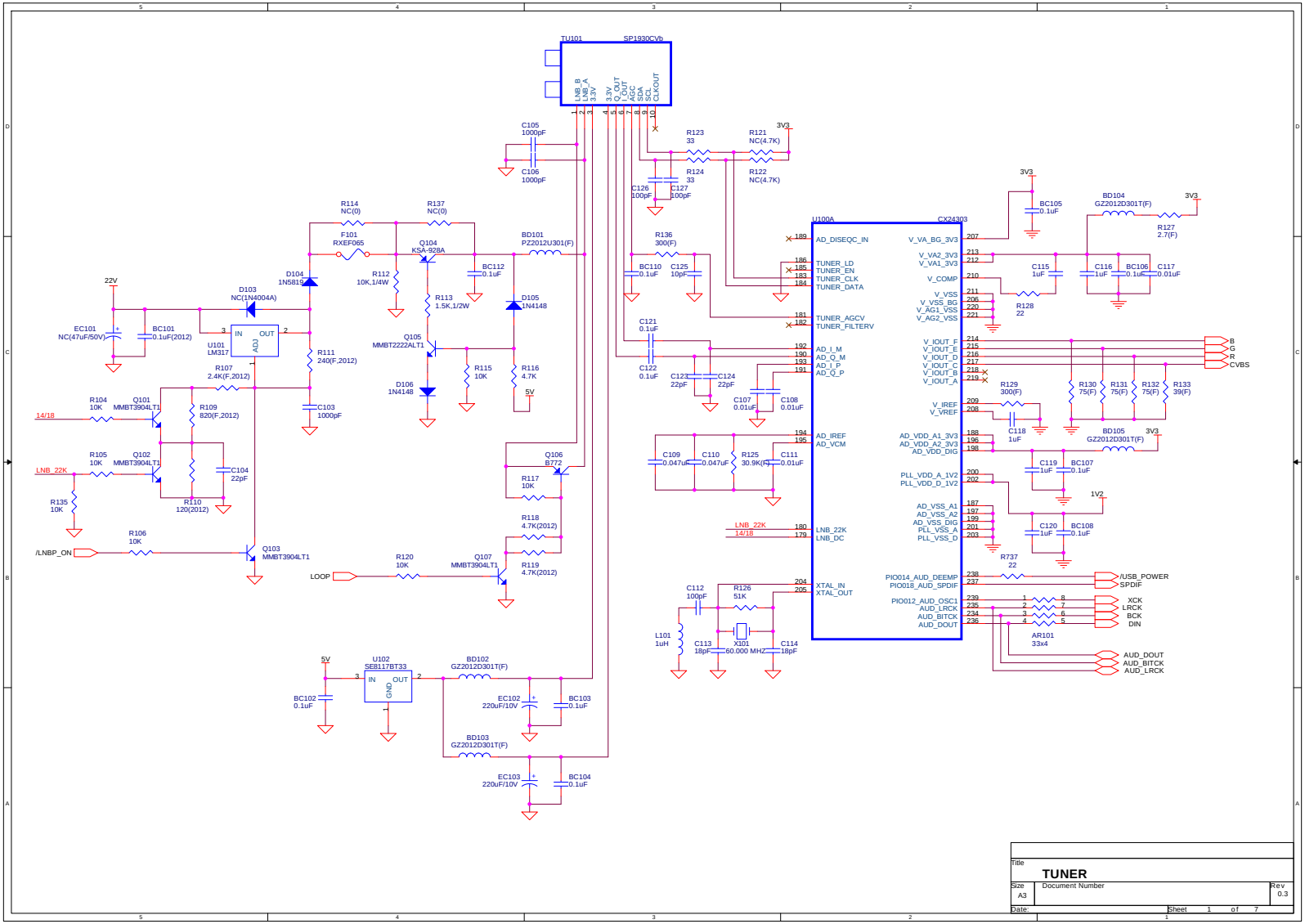

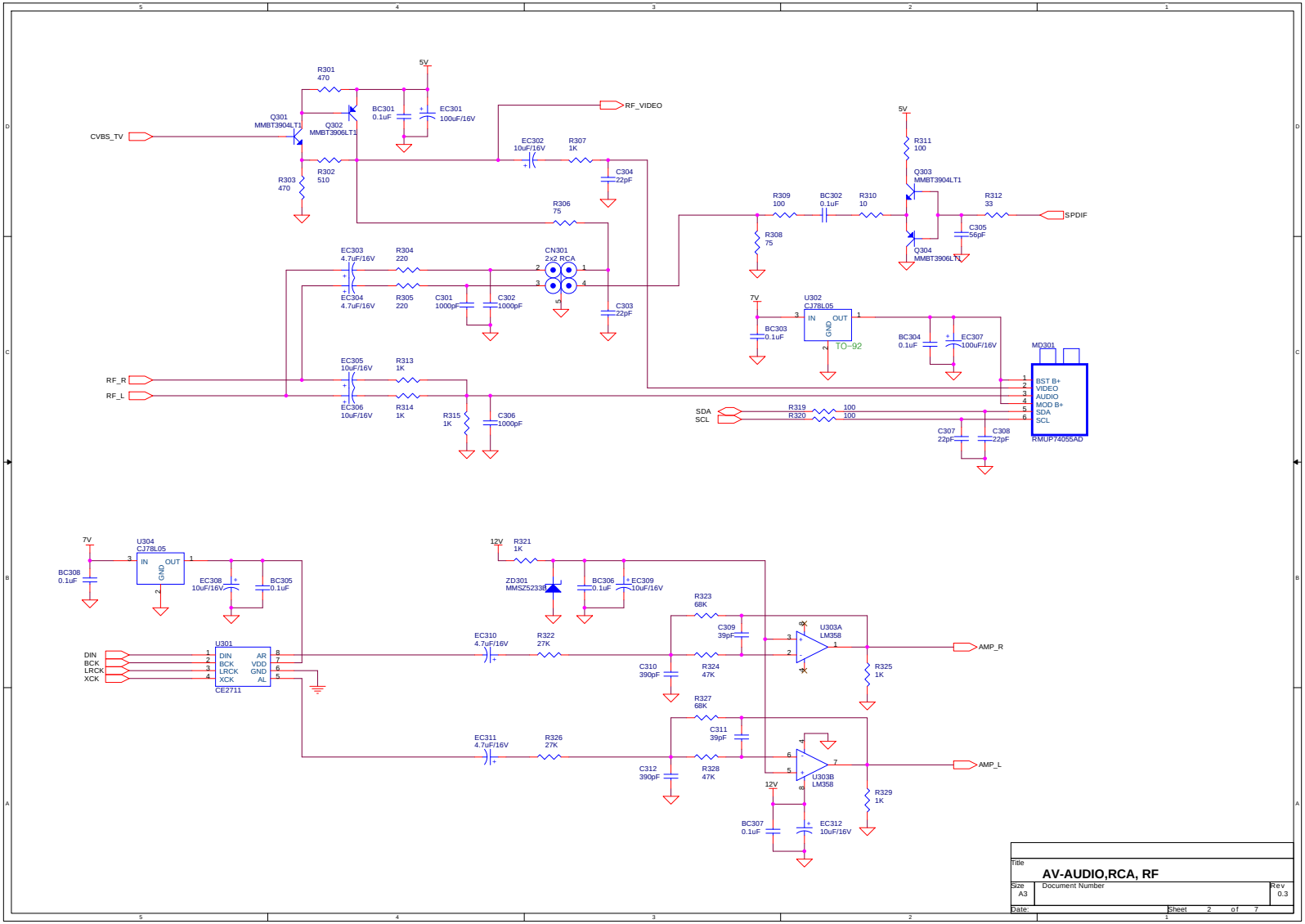
CVBS_TV
Q301 MMBT3904LT1
Q302 MMBT3906LT1
R301 470
R302 510
R303 470
5V
BC301 0.1uF
EC301 100uF/16V
RF_VIDEO
EC302 10uF/16V
R307 1K
C304 22pF
R306 75
R309 100
BC302 0.1uF
R310 10
R311 100
Q303 MMBT3904LT1
Q304 MMBT3906LT1
R312 33
SPDIF
C305 56pF
R308 75
EC303 4.7uF/16V
EC304 4.7uF/16V
R304 220
R305 220
C301 1000pF
C302 1000pF
CN301 2x2 RCA
C303 22pF
7V
U302 CJ78L05
IN OUT GND
TO-92
BC303 0.1uF
BC304 0.1uF
EC307 100uF/16V
MD301
BST B+
VIDEO
AUDIO
MOD B+
SDA
SCL
RMUP74055AD
RF_R
RF_L
EC305 10uF/16V
EC306 10uF/16V
R313 1K
R314 1K
R315 1K
C306 1000pF
SDA
SCL
R319 100
R320 100
C307 22pF
C308 22pF
U304 CJ78L05
BC308 0.1uF
EC308 10uF/16V
BC305 0.1uF
12V
R321 1K
ZD301 MMSZ5233B
BC306 0.1uF
EC309 10uF/16V
R323 68K
C309 39pF
U303A LM358
AMP_R
R325 1K
DIN
BCK
LRCK
XCK
U301 CE2711
AR VDD GND AL
EC310 4.7uF/16V
R322 27K
C310 390pF
R324 47K
R327 68K
C311 39pF
EC311 4.7uF/16V
R326 27K
C312 390pF
R328 47K
U303B LM358
AMP_L
R329 1K
BC307 0.1uF
EC312 10uF/16V
Title
AV-AUDIO,RCA, RF
Size A3
Document Number
Rev 0.3
Date:
Sheet 2 of 7

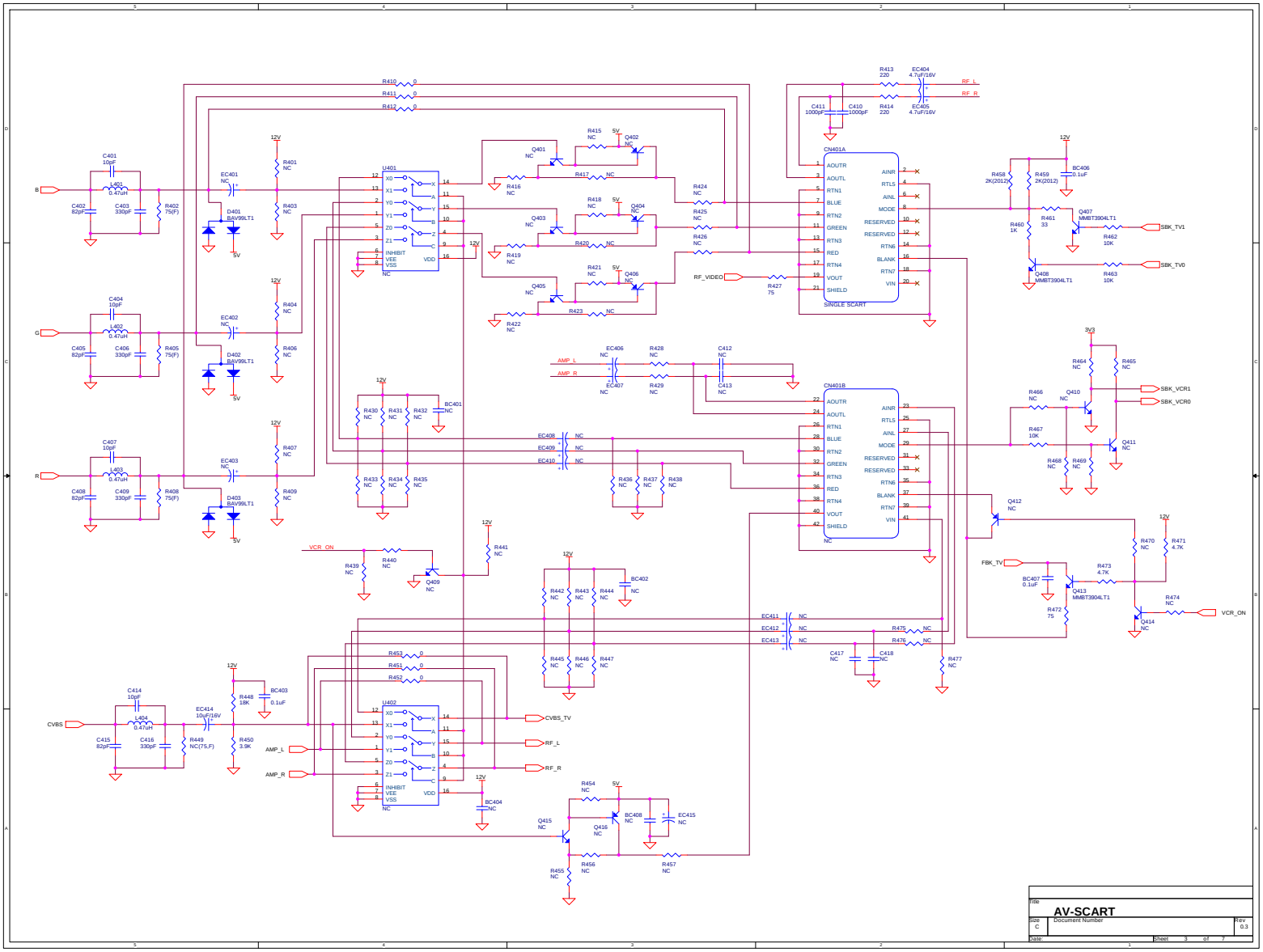
AV-SCART
Document Number
Rev 0.3
Size C
Sheet 3 of 7
CN401A
CN401B
SINGLE SCART
U401
U402
RF_VIDEO
RF_L
RF_R
SBK_TV1
SBK_TV0
SBK_VCR1
SBK_VCR0
VCR_ON
FBK_TV
CVBS_TV
AMP_L
AMP_R
CVBS
12V
5V
3V3

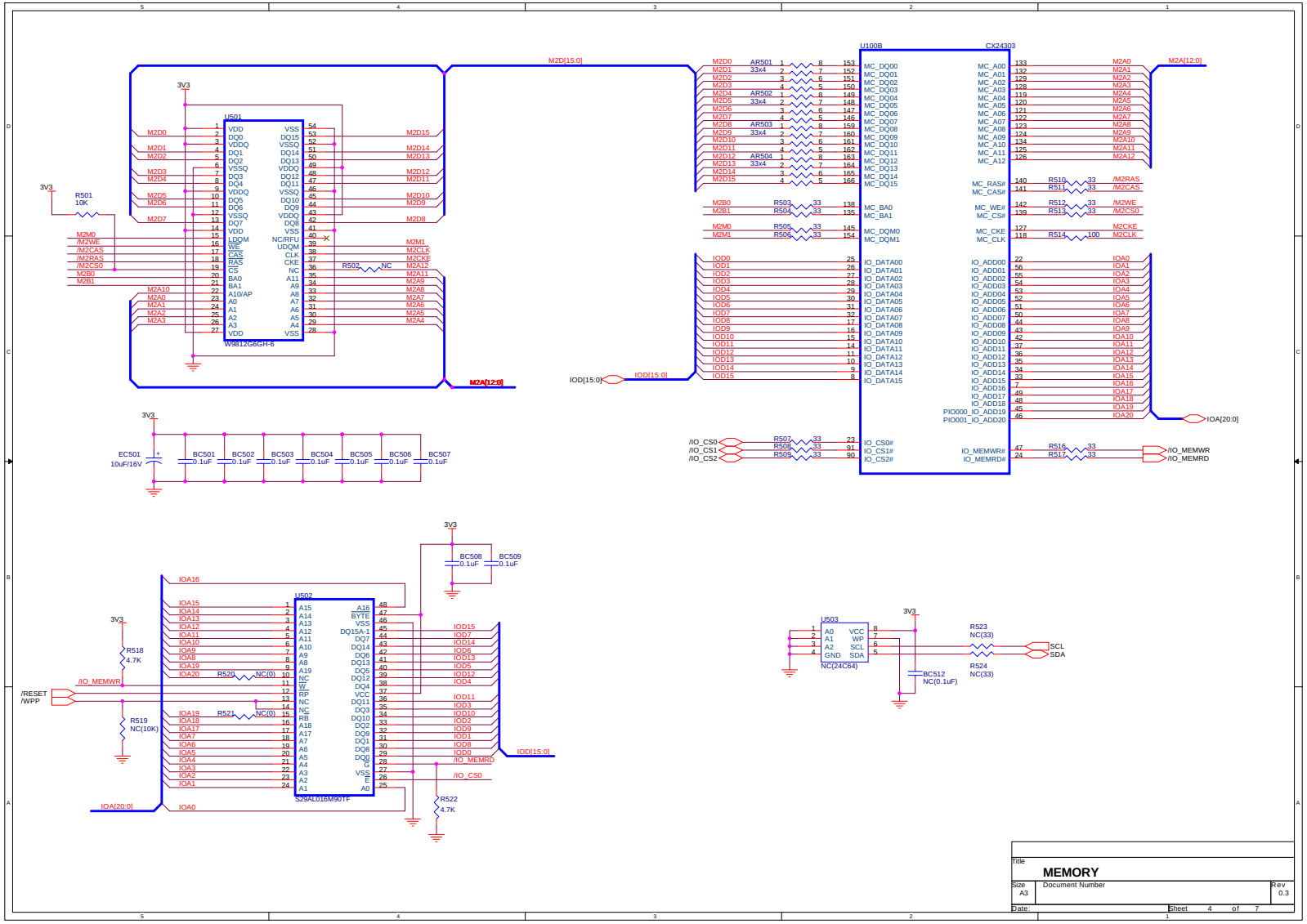
U501
W9812G6GH-6
U100B
CX24303
U502
S29AL016M90TF
U503
NC(24C64)
M2D[15:0]
M2A[12:0]
IOD[15:0]
IOA[20:0]
/IO_MEMWR
/IO_MEMRD
/IO_CS0
/IO_CS1
/IO_CS2
/RESET
/WPP
SCL
SDA
3V3
EC501
10uF/16V
R501
10K
R518
4.7K
R519
NC(10K)
R522
4.7K
R523
NC(33)
R524
NC(33)
BC512
NC(0.1uF)
Title
MEMORY
Size
A3
Document Number
Rev
0.3
Date:
Sheet 4 of 7

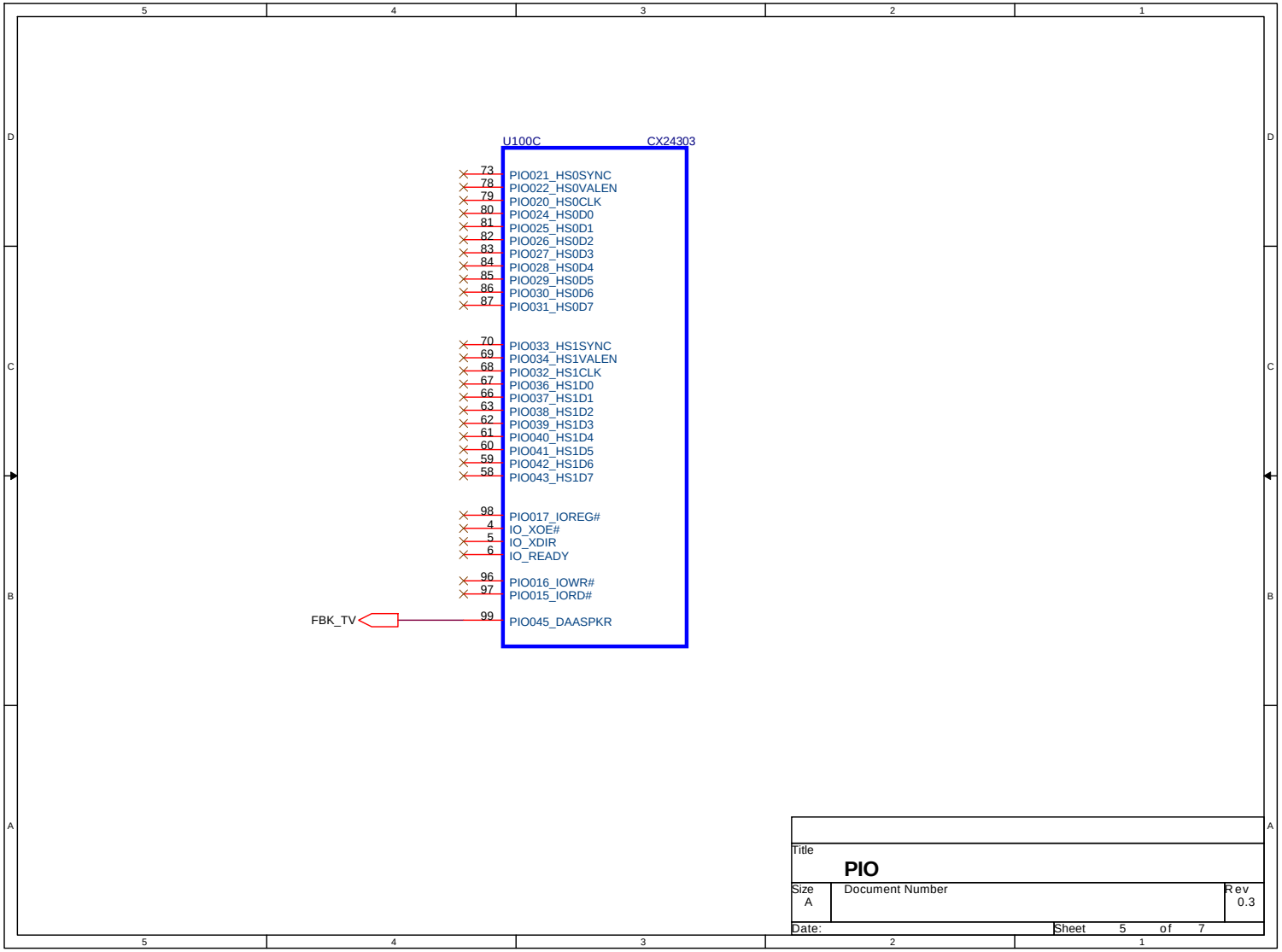
U100C
CX24303
73 PIO021_HS0SYNC
78 PIO022_HS0VALEN
79 PIO020_HS0CLK
80 PIO024_HS0D0
81 PIO025_HS0D1
82 PIO026_HS0D2
83 PIO027_HS0D3
84 PIO028_HS0D4
85 PIO029_HS0D5
86 PIO030_HS0D6
87 PIO031_HS0D7
70 PIO033_HS1SYNC
69 PIO034_HS1VALEN
68 PIO032_HS1CLK
67 PIO036_HS1D0
66 PIO037_HS1D1
63 PIO038_HS1D2
62 PIO039_HS1D3
61 PIO040_HS1D4
60 PIO041_HS1D5
59 PIO042_HS1D6
58 PIO043_HS1D7
98 PIO017_IOREG#
4 IO_XOE#
5 IO_XDIR
6 IO_READY
96 PIO016_IOWR#
97 PIO015_IORD#
FBK_TV
99 PIO045_DAASPKR
Title
PIO
Size
A
Document Number
Rev
0.3
Date:
Sheet 5 of 7

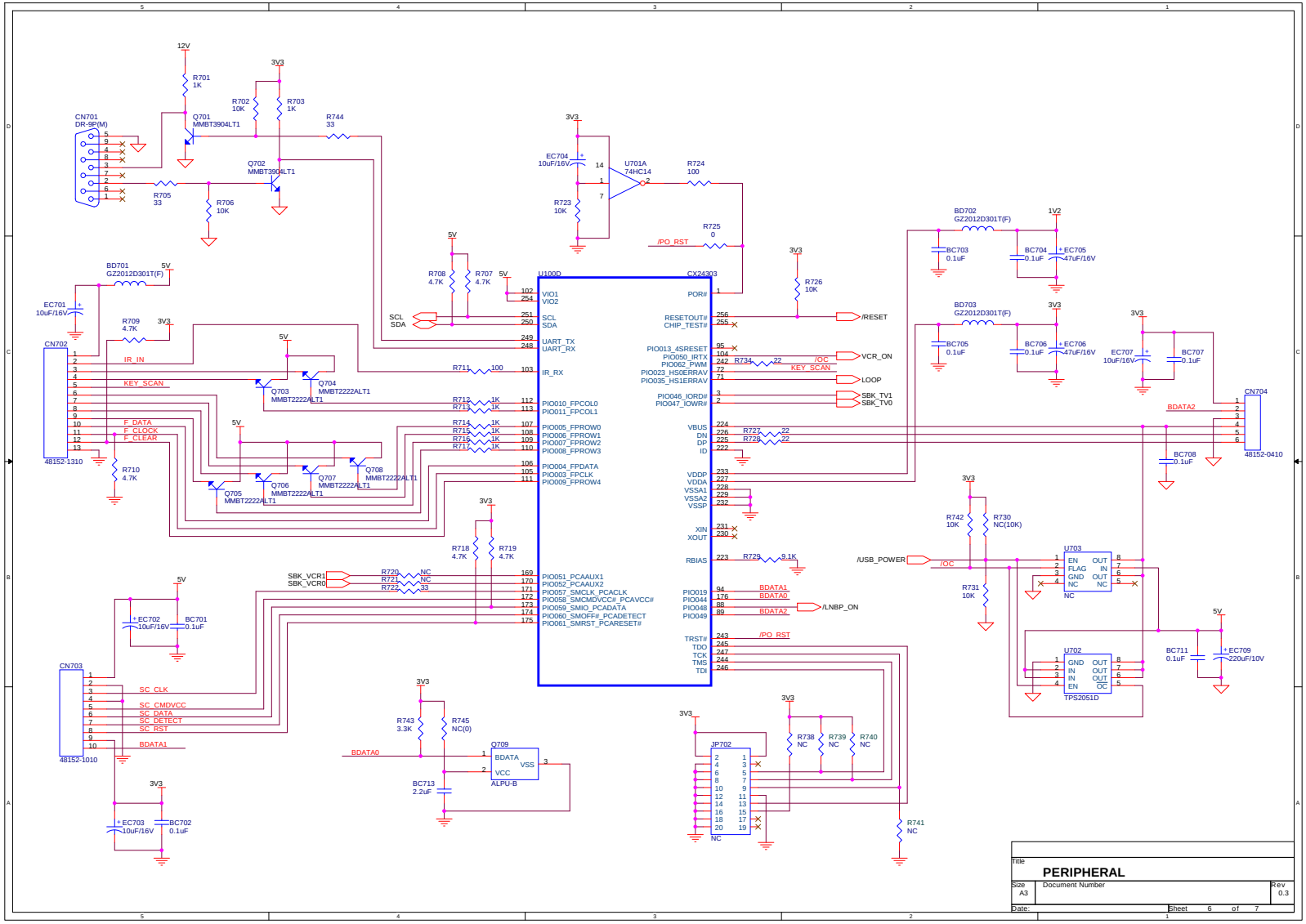
PERIPHERAL
Document Number
Rev 0.3
Sheet 6 of 7
Date:
Size A3
U100D
CX24303
CN701 DR-9P(M)
CN702 48152-1310
CN703 48152-1010
CN704 48152-0410
U701A 74HC14
U703 TPS2051D
U702 TPS2051D
JP702
Q709 ALPU-B
/RESET
VCR_ON
LOOP
SBK_TV1
SBK_TV0
/LNBP_ON
/USB_POWER
/OC
/PO_RST
KEY_SCAN
BDATA2
BDATA1
BDATA0
SC_CLK
SC_CMDVCC
SC_DATA
SC_DETECT
SC_RST
F_DATA
F_CLOCK
F_CLEAR
IR_IN
SCL
SDA
SBK_VCR1
SBK_VCR0

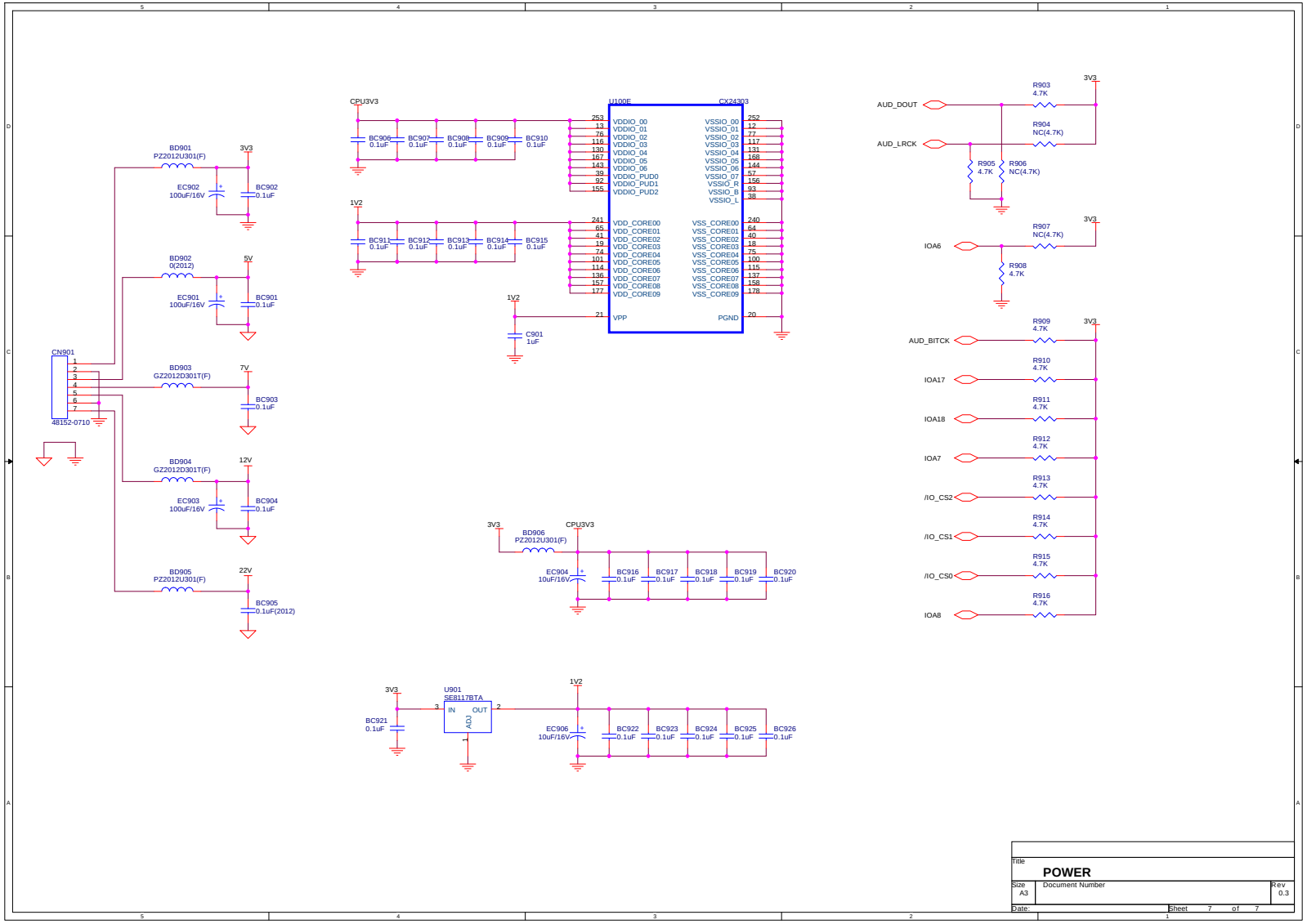
CN901
48152-0710
BD901
PZ2012U301(F)
3V3
EC902
100uF/16V
BC902
0.1uF
BD902
0(2012)
5V
EC901
100uF/16V
BC901
0.1uF
BD903
GZ2012D301T(F)
7V
BC903
0.1uF
BD904
GZ2012D301T(F)
12V
EC903
100uF/16V
BC904
0.1uF
BD905
PZ2012U301(F)
22V
BC905
0.1uF(2012)
CPU3V3
BC906 BC907 BC908 BC909 BC910
0.1uF
1V2
BC911 BC912 BC913 BC914 BC915
0.1uF
U100E
CX24303
VDDIO_00 VDDIO_01 VDDIO_02 VDDIO_03 VDDIO_04 VDDIO_05 VDDIO_06 VDDIO_PUD0 VDDIO_PUD1 VDDIO_PUD2
VDD_CORE00 VDD_CORE01 VDD_CORE02 VDD_CORE03 VDD_CORE04 VDD_CORE05 VDD_CORE06 VDD_CORE07 VDD_CORE08 VDD_CORE09
VPP
VSSIO_00 VSSIO_01 VSSIO_02 VSSIO_03 VSSIO_04 VSSIO_05 VSSIO_06 VSSIO_07 VSSIO_R VSSIO_B VSSIO_L
VSS_CORE00 VSS_CORE01 VSS_CORE02 VSS_CORE03 VSS_CORE04 VSS_CORE05 VSS_CORE06 VSS_CORE07 VSS_CORE08 VSS_CORE09
PGND
C901
1uF
AUD_DOUT
AUD_LRCK
R903
4.7K
R904
NC(4.7K)
R905
4.7K
R906
NC(4.7K)
IOA6
R907
NC(4.7K)
R908
4.7K
AUD_BITCK
IOA17
IOA18
IOA7
/IO_CS2
/IO_CS1
/IO_CS0
IOA8
R909 R910 R911 R912 R913 R914 R915 R916
4.7K
BD906
PZ2012U301(F)
EC904
10uF/16V
BC916 BC917 BC918 BC919 BC920
0.1uF
U901
SE8117BTA
IN
OUT
ADJ
BC921
0.1uF
EC906
10uF/16V
BC922 BC923 BC924 BC925 BC926
0.1uF
Title
POWER
Size
A3
Document Number
Rev
0.3
Date:
Sheet 7 of 7

4.2 Front Board

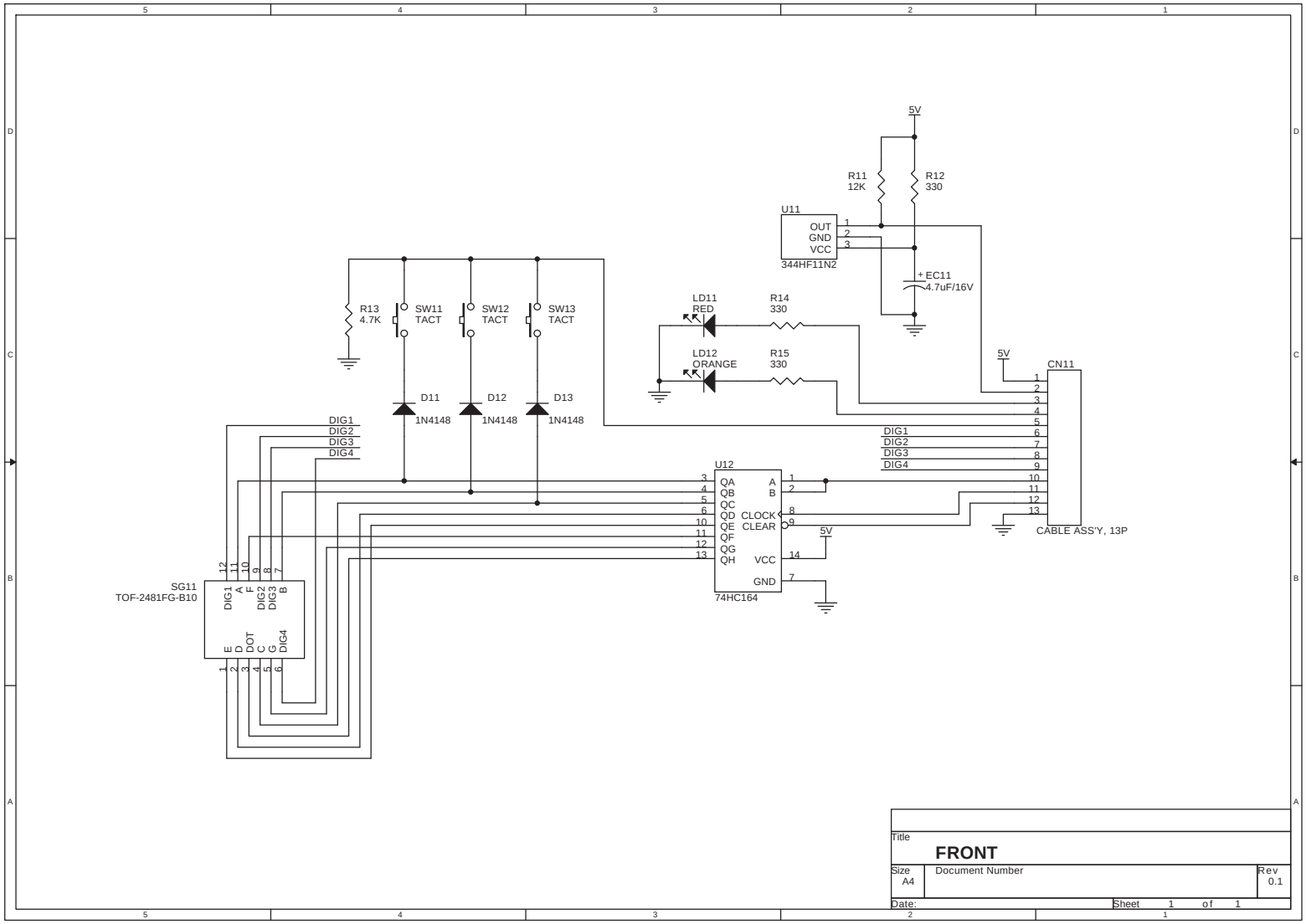

4.2 USB Board

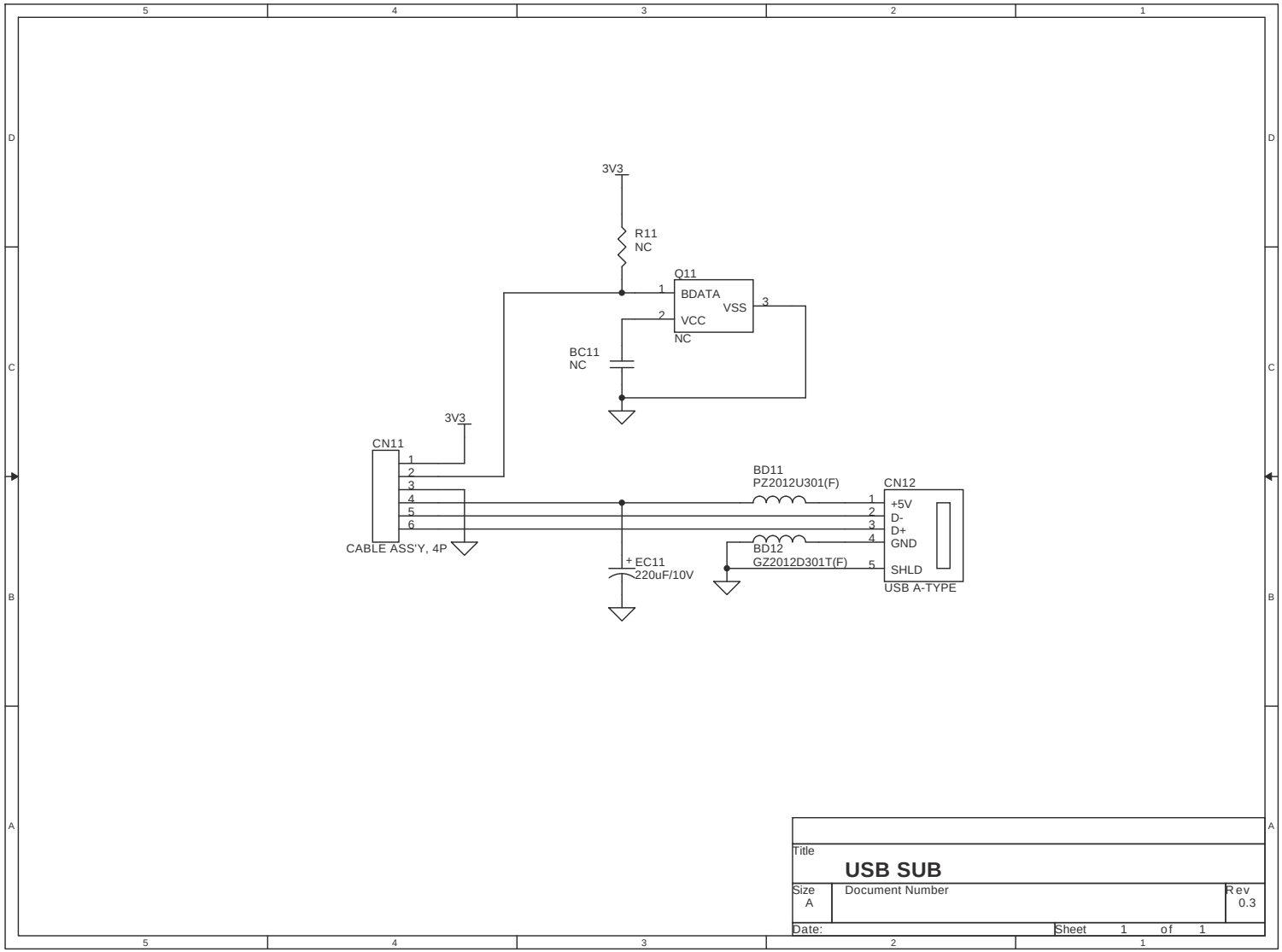
3V3
R11
NC
Q11
BDATA
VSS
VCC
NC
BC11
NC
3V3
CN11
CABLE ASS'Y, 4P
BD11
PZ2012U301(F)
CN12
+5V
D-
D+
GND
SHLD
USB A-TYPE
BD12
GZ2012D301T(F)
EC11
220uF/10V
Title
USB SUB
Size
A
Document Number
Rev
0.3
Date:
Sheet 1 of 1

5. BILL OF MATERIALS

MAIN BOARD		
SPECIFICATION	Q'TY	Location
DIP-HEAT SINK, 23*14.5*18*22(PIN), TO-220,2 HOLE, ROHS	1	(U101)
SCREW, TT2,BIN+, SIZE : 3.0*6BB, SILVER	1	(U101)
DIP-CON, SINGLE SCART CONNECTOR, CS-107(21PIN), ROHS	1	CN401
DIP-CON, DRJACK, DR-9P(M), w/ SCREW, ROHS	1	CN701
DIP-CON, 48152-0410 (TJC3-4A), 4P HEADER, 2.5mm, ROHS	1	CN704
DIP-CON, 48152-0710 (TJC3-7A), 7P HEADER, 2.5mm, ROHS	1	CN901
DIP-CON, 48152-1010 (TJC3-10A), 10P HEADER, 2.5mm, ROHS	1	CN703
DIP-CON, 48152-1310 (TJC3-13A), 13P HEADER, 2.5mm, ROHS	1	CN702
DIP-CON, AV4-8.4-7/PB, 2x2 RCA, ROHS	1	CN301
DIP-TRANSISTOR, KSA-928A (TO-92MOD), PNP, ROHS	1	Q104
DIP-TRANSISTOR, B772 (TO-126), PNP, ROHS	1	Q106
DIP-REGULATOR, LM317T (TO-220), STM, ROHS	1	U101
DIP-X-TAL, 60.000 MHZ,18PF, 3rd Overtone, 20ppm,ROHS	1	X101
DIP-REGULATOR, CJ78L05 (TO-92), CJ-ELEC, ROHS	2	U302,U304
AXIAL-DIODE, 1N5819 (DO-41), ROHS	1	D104
AXIAL-DIODE, 1N4148 (DO-41), ROHS	2	D105,D106
AXIAL-RES, J, 10K,1/4W, 103J, HAN RYUK, ROHS	1	R112
AXIAL-RES, J, 1.5K,1/2W, 152J, HAN RYUK, ROHS	1	R113
RADIAL-CAP,ELEC, 220UF, 10V, SMS, 6.3*11, 5MM TP 85℃, G-LUXON, ROHS	3	EC102,EC103,EC709
RADIAL-CAP,ELEC, 100UF, 16V, SMS, 6.3*11, 5MM TP 85℃, G-LUXON, ROHS	5	EC301,EC307,EC901,EC902,EC903
RADIAL-CAP,ELEC, 10UF, 16V, SMS, 5*11, 5MM TP 85℃, G-LUXON, ROHS	15	EC302,EC305,EC306,EC308,EC309,EC312,EC414,EC501,EC701,EC702, EC703,EC704,EC707,EC904,EC906
RADIAL-CAP,ELEC, 4.7UF, 50V, SMS, 5*11, 5MM TP 85℃, G-LUXON, ROHS	6	EC303,EC304,EC310,EC311,EC404,EC405
RADIAL-CAP,ELEC, 47UF, 16V, SMS, 5*11, 5MM TP 85℃, G-LUXON, ROHS	2	EC705,EC706
RADIAL-POLY SW, RXEF065, Hold Current=0.65A, ROHS	1	F101
PCB-MAIN, S2100-V1.1, 2-LAYER, SIZE=168*120mm, ROHS	1	
PAK-LABEL, SERIAL NO., Board 25*5MM	1	Main Board=1
SMD-BEAD, GZ2012D301T(F), |Z|=300 OHM, Ir=500mA, SUNLORD, ROHS	9	BD102,BD103,BD104,BD105,BD701,BD702,BD703,BD903,BD904

SMD-BEAD, PZ2012U301(F), |Z|=300 OHM, Ir=1500mA, SUNLORD, ROHS	4	BD101,BD901,BD905,BD906
SMD-RES, 2012, J, 1/10, 0, 000J, ROHS	1	BD902
SMD-CAP, 1608, J, 50V, 100PF, C101, ROHS	3	C112,C126,C127
SMD-CAP, 1608, K, 50V, 1000PF, C102, ROHS	8	C103,C105,C106,C301,C302,C306,C410,C411
SMD-CAP, 1608, K, 50V, 0.01UF, C103, ROHS	4	C107,C108,C111,C117
SMD-CAP, 1608, Z, 25V, 0.1UF, C104, ROHS	65	BC102,BC103,BC104,BC105,BC106,BC107,BC108,BC110,BC112,C121, C122,BC301,BC302,BC303,BC304,BC305,BC306,BC307,BC308,BC403, BC406,BC407,BC501,BC502,BC503,BC504,BC505,BC506,BC507,BC508, BC509,BC701,BC702,BC703,BC704,BC705,BC706,BC707,BC708,BC711, BC901,BC902,BC903,BC904,BC906,BC907,BC908,BC909,BC910,BC911, BC912,BC913,BC914,BC915,BC916,BC917,BC918,BC919,BC920,BC921, BC922,BC923,BC924,BC925,BC926
SMD-CAP, 2012, Z, 50V, 0.1UF(2012), C104, ROHS	2	BC101,BC905
SMD-CAP, 1608, Z, 16V, 1UF, C105, ROHS	6	C115,C116,C118,C119,C120,C901
SMD-CAP, 1608, J, 50V, 18PF, C180, ROHS	2	C113,C114
SMD-CAP, 1608, J, 50V, 22PF, C220, ROHS	7	C104,C123,C124,C303,C304,C307,C308
SMD-CAP, 1608, Z, 10V, 2.2UF, C225, ROHS	1	BC713
SMD-CAP, 1608, K, 50V, 0.047UF, C473, ROHS	2	C109,C110
SMD-RES,ARRAY, 3216, J, 1/4, 33(3216), 330J, 33x4, ROHS	5	AR101,AR501,AR502,AR503,AR504
SMD-CAP, 1608, D, 50V, 10PF, C100, ROHS	5	C125,C401,C404,C407,C414
SMD-CAP, 1608, J, 50V, 56PF, C560, ROHS	1	C305
SMD-CAP, 1608, J, 50V, 39PF, C390, ROHS	2	C309,C311
SMD-CAP, 1608, J, 50V, 390PF, C391, ROHS	2	C310,C312
SMD-CAP, 1608, J, 50V, 82PF, C820, ROHS	4	C402,C405,C408,C415
SMD-CAP, 1608, J, 50V, 330PF, C331, ROHS	4	C403,C406,C409,C416
SMD-DIODE, BAV99LT1 (SOT-23), ROHS	3	D401,D402,D403
SMD-INDUCTOR, SDFL2012Q1R0KT(F), 1uH, SUNLORD, ROHS	1	L101
SMD-INDUCTOR, SDFL2012LR47KT(F), 0.47uH, SUNLORD, ROHS	4	L401,L402,L403,L404
SMD-TRANSISTOR, MMBT3904LT1 (SOT-23), NPN, ROHS	11	Q101,Q102,Q103,Q107,Q301,Q303,Q407,Q408,Q413,Q701,Q702
SMD-TRANSISTOR, MMBT2222ALT1 (SOT-23), NPN, ROHS	7	Q105,Q703,Q704,Q705,Q706,Q707,Q708

SMD-TRANSISTOR, MMBT3906LT1 (SOT-23), PNP, ROHS	2	Q302,Q304
SMD-IC, Protection IC ALPU-B (SOT-23F), NEOWINE, ROHS	1	Q709
SMD-RES, 1608, J, 1/16, 10K, 103J, ROHS	16	R104,R105,R106,R115,R117,R120,R135,R462,R463,R501, R702,R706,R723,R726,R731,R742
SMD-RES, 2012, F, 1/10, 2.4K(F,2012), 242F, ROHS	1	R107
SMD-RES, 2012, F, 1/10, 820(F,2012), 821F, ROHS	1	R109
SMD-RES, 2012, J, 1/10, 120(2012), 121J, ROHS	1	R110
SMD-RES, 2012, F, 1/10, 240(F,2012), 241F, ROHS	1	R111
SMD-RES, 1608, J, 1/16, 4.7K, 472J, ROHS	22	R116,R471,R473,R518,R522,R707,R708,R709,R710,R718, R719,R903,R905,R908,R909,R910,R911,R912,R913,R914, R915,R916
SMD-RES, 2012, J, 1/10, 4.7K(2012), 472J, ROHS	2	R118,R119
SMD-RES, 1608, J, 1/16, 33, 330J, ROHS	20	R123,R124,R312,R461,R503,R504,R505,R506,R507,R508, R509,R510,R511,R512,R513,R516,R517,R705,R722,R744
SMD-RES, 1608, F, 1/16, 30.9K(F),303R9F, ROHS	1	R125
SMD-RES, 1608, J, 1/16, 51K, 513J, ROHS	1	R126
SMD-RES, 1608, F, 1/16, 2.7(F), 2R7F, ROHS	1	R127
SMD-RES, 1608, J, 1/16, 22, 220J, ROHS	5	R128,R727,R728,R734,R737
SMD-RES, 1608, F, 1/16, 300(F), 301F, ROHS	2	R129,R136
SMD-RES, 1608, F, 1/16, 75(F), 750F, ROHS	3	R130,R131,R132
SMD-RES, 1608, F, 1/16, 39(F), 390F, ROHS	1	R133
SMD-RES, 1608, J, 1/16, 470, 471J, ROHS	2	R301,R303
SMD-RES, 1608, J, 1/16, 510, 511J, ROHS	1	R302
SMD-RES, 1608, J, 1/16, 220, 221J, ROHS	4	R304,R305,R413,R414
SMD-RES, 1608, J, 1/16, 75, 750J, ROHS	4	R306,R308,R427,R472
SMD-RES, 1608, J, 1/16, 1K, 102J, ROHS	16	R307,R313,R314,R315,R321,R325,R329,R460,R701,R703, R712,R713,R714,R715,R716,R717
SMD-RES, 1608, J, 1/16, 100, 101J, ROHS	7	R309,R311,R319,R320,R514,R711,R724
SMD-RES, 1608, J, 1/16, 10, 100J, ROHS	1	R310
SMD-RES, 1608, J, 1/16, 27K, 273J, ROHS	2	R322,R326
SMD-RES, 1608, J, 1/16, 68K, 683J, ROHS	2	R323,R327

SMD-RES, 1608, J, 1/16, 47K, 473J, ROHS	2	R324,R328
SMD-RES, 1608, J, 1/16, 0, 000J, ROHS	6	R410,R411,R412,R451,R452,R453
SMD-RES, 1608, J, 1/16, 18K, 183J, ROHS	1	R448
SMD-RES, 1608, J, 1/16, 3.9K, 392J, ROHS	1	R450
SMD-RES, 2012, J, 1/10, 2K(2012), 202J, ROHS	2	R458,R459
SMD-RES, 1608, F, 1/16, 9.1K(F), 912F, ROHS	1	R729
SMD-RES, 1608, J, 1/16, 3.3K, 332J, ROHS	1	R743
SMD-IC, MPEG/CPU CX24303 (QFP-256P), conexant, ROHS	1	U100
SMD-REGULATOR, SE8117BT33-LF-3.3V (SOT-223),SEAWARD, ROHS	1	U102
SMD-IC, Audio DAC CE2711 (SO-8P), CEI,ROHS	1	U301
SMD-IC, LM358 (SO-8P), HTC, ROHS	1	U303
SMD-IC, 128M SDRAM W9812G6GH-6 (TSOP-54P), WINBOND, ROHS	1	U501
SMD-IC, 2MB FLASH-ROM S29AL016M90TFI010,1M*16 (TSOP-48P),SPANSION, ROHS	1	U502
SMD-IC, 74HC14D (SO-14P), PHILIPS, ROHS	1	U701
SMD-IC, USB Power SW TPS2051BDR (SO-8P), TI, ROHS	1	U702
SMD-REGULATOR, SE8117BTA-LF-ADJ (SOT-223), SEAWARD, ROHS	1	U901
SMD-DIODE, MMSZ5233B (SOD-123), Vz=6V, ROHS	1	ZD301

FRONT BOARD		
SPECIFICATION	Q'TY	Location
DIP-MODULE, 7-SEG, LIN-28416BG,(SIZE: 32.1*5.90*7.0*3.2)7mm, ROHS	1	SG11
DIP-MODULE, IR RX, 344HF11N2, 12.4mm, Pb-free	1	U11
DIP-CON, CABLE ASS'Y, 13P, STRAIGHT, 165mm, 2.5mm, Pb-free	1	CN11
DIP-IC, 74HCT164N (PDIP-16), PHILIPS, Pb-free	1	U12
DIP-LED SUPPORT, 8.2*3.5mm BLACK ABS	2	(LD11),(LD12)
PCB-FRONT, 26A0-3K, FR-V1.0, 1-LAYER, SIZE=118*34.4mm, Pb-free	1	
AXIAL-DIODE, 1N4148 (DO-41), Pb-free	3	D11,D12,D13
AXIAL-RES, J, 12K,1/6W, 123J,CR012123JT, Pb-free	1	R11
AXIAL-RES, J, 330,1/6W, 331J,CR012331JT, Pb-free	3	R12,R14,R15
AXIAL-RES, J, 4.7K,1/6W, 472J,CR012472JT, Pb-free	1	R13
AXIAL, JUMPER WIRE-NS-S, 52MM, Pb-free	6	JP1,JP2,JP3,JP4,JP5,JP6
RADIAL-CAP,ELEC, 4.7UF, 16V, SRE, 4*6 TP Pb-free	1	EC11
RADIAL-LED, XLY031308C(GREEN), 3Φ, ROHS	1	LD12
RADIAL-LED, XLY031308A(RED), 3Φ, ROHS	1	LD11
RADIAL-SWITCH, TACT SW, 2P, 220g, Pb-free	3	SW11,SW12,SW13

USB BOARD		
SPECIFICATION	Q'TY	Location
RADIAL-CAP,ELEC, 220UF, 10V, SRE, 4*6 TP Pb-free	1	EC11
DIP-CON, CABLE ASS'Y, 4P, STRAIGHT, 180mm, 2.5mm, Pb-free	1	CN11
DIP-CON, USB JACK (A-TYPE), STRAIGHT, Pb-free	1	CN12
PCB-USB, 1-LAYER, USB-V1.0 SIZE=32*21mm, Pb-free	1	
SMD-BEAD, GZ2012D301T(F), |Z|=300 OHM, Ir=500mA, SUNLORD, Pb-free	1	BD12
SMD-BEAD, PZ2012U301(F), |Z|=300 OHM, Ir=1500mA, SUNLORD, Pb-free	1	BD11

6. GERBER DATA

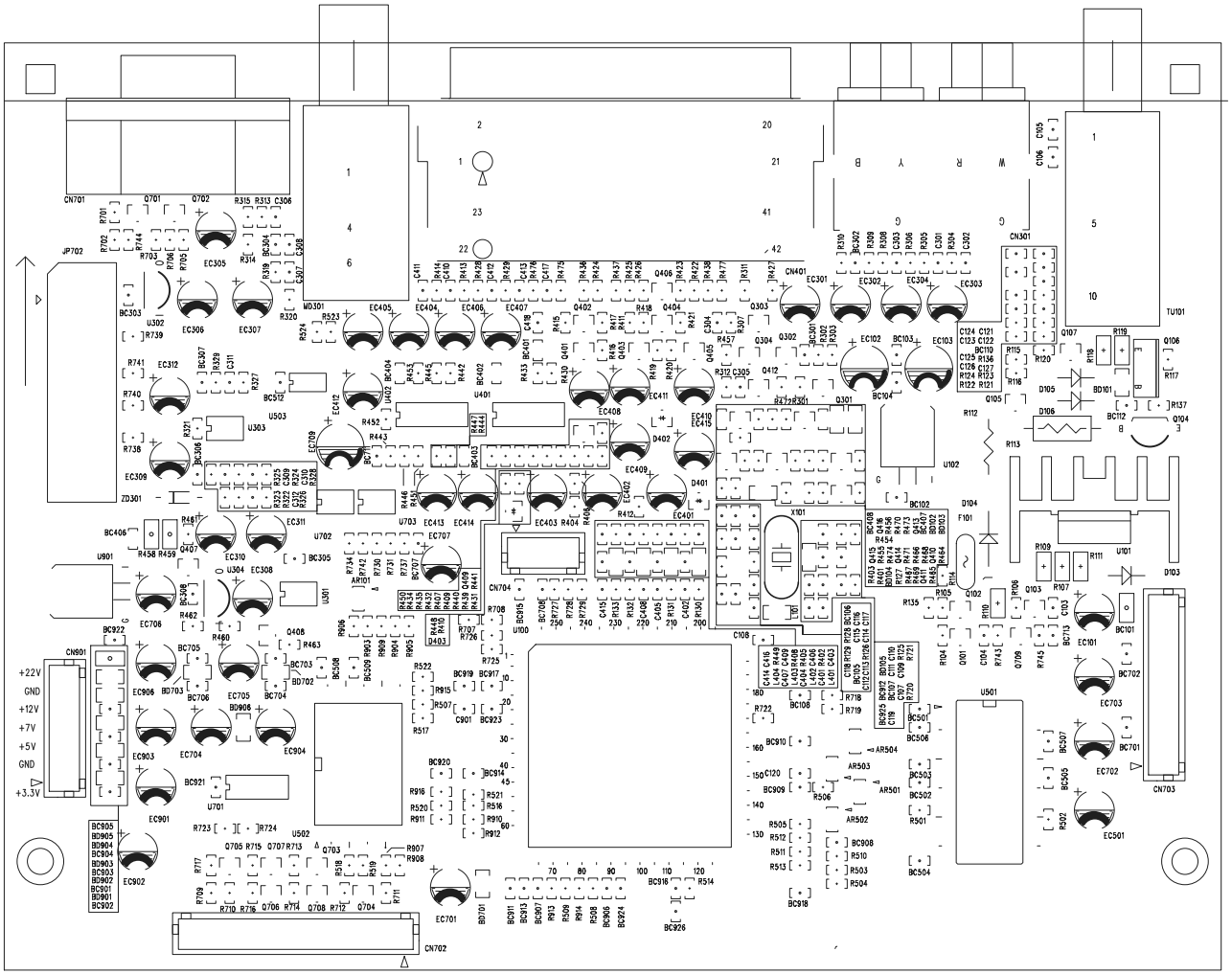

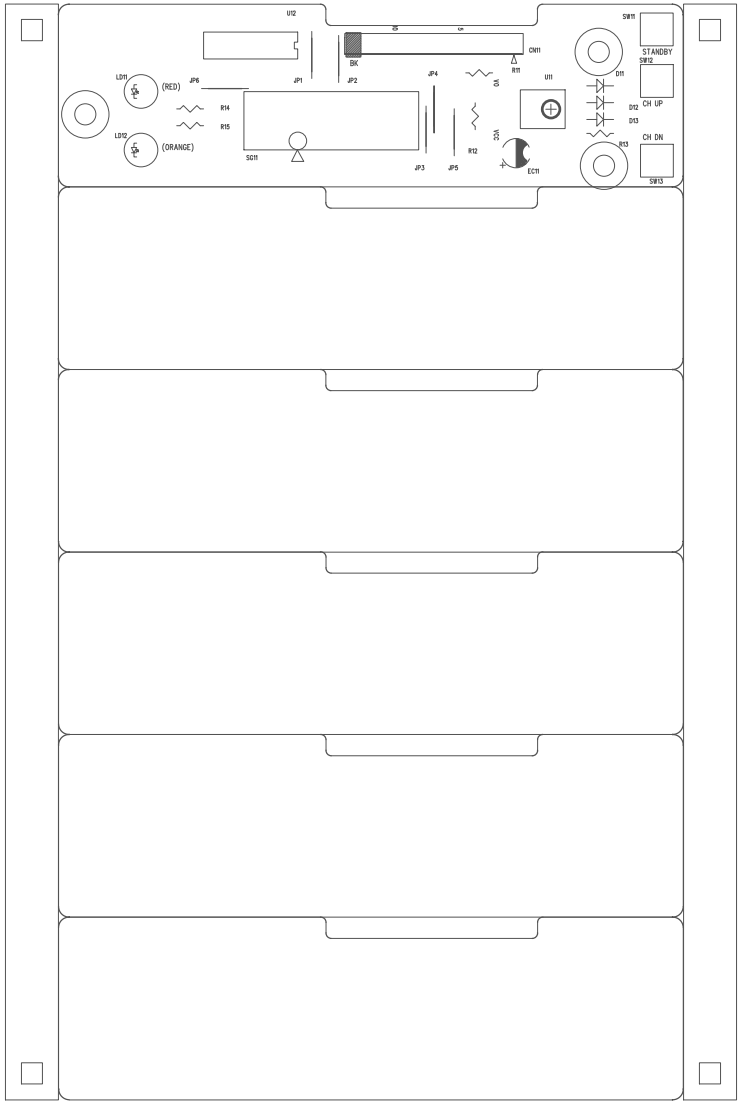
U12
BK
CN11
R11
SW11
STANDBY
SW12
LD11
(RED)
JP6
JP1
JP2
JP4
R5
U11
D11
R14
R15
D12
CH UP
D13
LD12
(ORANGE)
SG11
JP3
JP5
R12
R13
EC11
CH DN
SW13

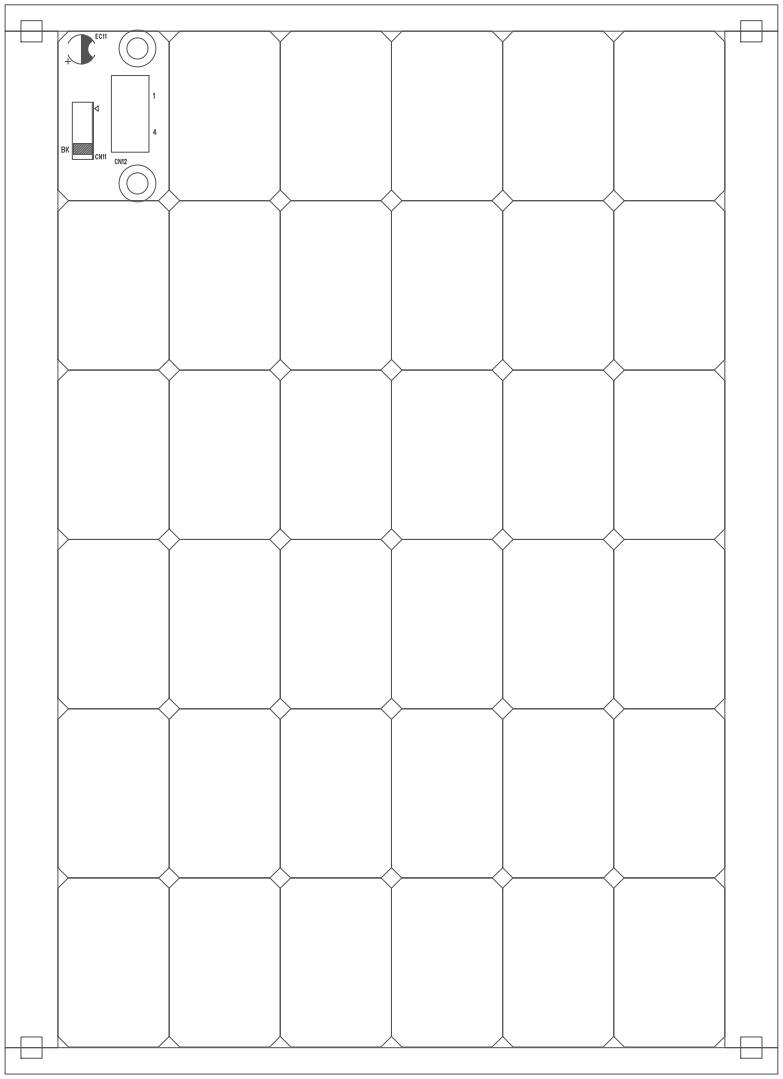
EC11
1
4
BK
CN11
CN12