LG PDP42V6

General Information

PDP Module

SAFETY PRECAUTIONS

POP Module is a display device to be divided into a Panel part and a Drive part. The Panel part consists of Electrodes, Phosphor, various dielectrics and gas, and the Drive part includes electronic circuitry and PCB.
When using/handling this PDP Module, pay attention to the below warning and cautions.

⚠ Warning
Indicates a hazard that may lead to death or injury if the warning is ignored and the product is handled incorrectly.

⚠ Caution
Indicates a hazard that can lead to injury or damage to property if the caution is ignored and the product is handled incorrectly.

⚠ WARNING

1. Do not supply a voltage higher than that specified to this product. This may damage the product and may cause a fire.

2. Do not use this product in locations where the humidity is extremely high, where it may be splashed with water, or where flammable materials surround it. Do not install or use the product in a location that does no satisfy the specified environmental conditions. This may damage the product and may cause a fire.

3. If a foreign substance (such as water, metal, or liquid) gets inside the product, immediately turn off the power. Continuing to use the product, it is may cause fire or electric shock.

4. If the product emits smoke, and abnormal smell, or makes an abnormal sound, immediately turn off the power. Continuing to use the product, it may cause fire or electric shock.

5. Do not disconnect or connect the connector while power to the product is on. It takes some time for the voltage to drop to a sufficiently low level after the power has been turned off. Confirm that the voltage has dropped to a safe level before disconnecting or connecting the connector.

6. Do not pull out or insert the power cable from/to an outlet with wet hands. It may cause electric shock.

7. Do not damage or modify the power cable. It may cause fire or electric shock.

8. If the power cable is damaged, or if the connector is loose, do not use the product: otherwise, this can lead to fire or electric shock.

9. If the power connector or the connector of the power cable becomes dirty or dusty, wipe it with a dry cloth. Otherwise, this can lead to fire.

10. PDP Module uses a high voltage (Max.450V dc). Keep the cautions concerning electric shock and do not touch the Device circuitry when handling the POP Unit. And because the capacitor of the Device circuitry may remain charged at the moment of Power OFF, standing by for 1 minute is required in order to touch the Device circuitry.

⚠ CAUTION

1) Do not place this product in a location that is subject to heavy vibration, or on an unstable surface such as an inclined surface. The product may fall off or fall over, causing injuries.

2. Before disconnecting cable from the product, be sure to turn off the power. Be sure to hold the connector when disconnecting cables. Pulling a cable with excessive force may cause the core of the cable to be exposed or break the cable, and this can lead to fire or electric shock.

3. This product should be moved by two or more persons. If one person attempts to carry this product alone, he/she may be injured.

4. This product contains glass. The glass may break, causing injuries, if shock, vibration, heat, or distortion is applied to the product.

5. The temperature of the glass of the display may rise to 80°C or more depending on the conditions of use. If you touch the glass inadvertently, you may be burned.

6. If glass surface of the display breaks or is scratched, do not touch the broken pieces or the scratches with bare hands. You may be injured.

7. PDP Module requires to be handled with care not to be touched with metal or hard materials, and must not be stressed by heat or mechanical impact.

8. There are some exposed components on the rear panel of this product. Touching these components may cause an electric shock.

9. When moving the product, be sure to turn off the power and disconnect all the cables. While moving the product, watch your step. The product may be dropped or all, leading to injuries of electric shock.

10. In order to protect static electricity due to C-MOS circuitry of the Drive part, wear a wrist band to protect static electricity when handling.

11. If cleaning the Panel, wipe it with a soft cloth moistened with water or a neutral detergent and squeezed, being careful not to touch the connector part of the Panel. And don't use chemical materials like thinner or benzene.

12. If this product is used as a display board to display a static image, "image sticking" occurs. This means that the luminance of areas of the display that remain lit for a long time drops compared with luminance of areas that are lit for a shorter time, causing uneven luminance across the display.
The degree to which this occurs is in proportion to the luminance at which the display is used. To prevent this phenomenon, therefore, avoid static images as much as possible and design your system so that it is used at a low luminance, by reducing signal level difference between bright area and less bright area through signal processing.

13. Because PDP Module emits heat from the Glass Panel part and the Drive circuitry, the environmental temperature must not be over 40°C. The temperature of the Glass Panel part is especially high owing to heat from internal Drive circuitry. And because the PDP Module is driven by high voltage, it must avoid conductive materials.

14. If inserting components or circuit board in order to repair, be sure to fix a lead line to the connector before soldering.

15. If inserting high-power resistor (metal-oxide film resistor or metal film resistor) in order to repair, insert it as 10mm away as from a board.

16. During repairs, high voltage or high temperature components must be put away from a lead line.

17. This is a Cold Chassis but you had better use a cold transformer for safety during repairs. If repairing electricity source part, you must use the cold transformer.

18. Do not place an object on the glass surface of the display. The glass may break or be scratched.

19. This product may be damaged if it is subject to excessive stresses (such as excessive voltage, current, or temperature). The absolute maximum ratings specify the limits of these stresses.

20. The recommended operating conditions are conditions in which the normal operation of this product is guaranteed. All the rated values of the electrical specifications are guaranteed within these conditions. Always use the product within the range of the recommended operating conditions. Otherwise, the reliability of the product may be degraded.

21. This product has a glass display surface. Design your system so that excessive shock and load are not applied to the glass. Exercise care that the vent at the corner of the glass panel is not damaged.
If the glass panel or vent is damaged, the product is inoperable.

22. Do not cover or wrap the product with a cloth or other covering while power is supplied to the product.

23. Before turning on power to the product, check the wiring of the product and confirm that the supply voltage is within the rated voltage range. If the wiring is wrong or if a voltage outside the rated range is applied, the product may malfunction or be damaged.

24. Do not store this product in a location where temperature and humidity are high. This may cause the product to malfunction. Because this product uses a discharge phenomenon, it may take time to light (operation may be delayed) when the product is used after it has been stored for a long time. In this case, it is recommended to light all cells for about 2 hours (aging).

25. This product is made from various materials such as glass, metal, and plastic. When discarding it, be sure to contact a professional waste disposal operator.

26. If faults occur due to arbitrary modification or disassembly, LG Electronics is not responsible for function, qualify or other items.

27. Use of the product with a combination of parameters, conditions, or logic not specified in the specifications of this product is not guaranteed. If intending to use the product in such a way, be sure to consult LGE in advance.

28. Within the warranty period, general faults that occur due to defects in components such as ICs will be rectified by LGE without charge. However, IMAGE STICKING due to misapplying the above (12) provision is not included in the warranty. Repairs due to the other faults may be charged for depending on responsibility for the faults.

Adjustment

1. Application Object
This standard is applied to the PDP42V6#### PDP Module which is manufactured by the manufacturing team of PDP promotion department or elsewhere.

2. Notes
1) Without any special specification, the Module should be at the condition of preliminaries more than 10 minutes before adjusting.

- Service signal: 100% Full White signal
- Service DC voltage: Vcc: 5V, Va: 65V, Vs: 185V
- DC/DC Pack voltage : Vsetup: 200V, Vscw: 11 5V,
- Vy: -75V
- Preliminaries environment : Temp (25±5°C), Relative humidity (65±10%)

2) Module should get the Aging for the equilibrium after finishing the assembling. Aging condition is shown below.

- Service signal: 100% Full White, Red, Green, Blue pattern signal (Service time of each pattern : within 5 minutes / cycle)
- Service DC voltage : Match the voltage with the set up voltage in the first adjustment.
- Aging time : More than 4Hrs
- Aging environment : Temp (60±2°C), Relative humidity-Less than 75%

3) Module adjustment should be followed by below sequence.

- Setting up the initial voltage and adjusting the voltage wave form of Vsetup
- Measuring the Margin of Vs voltage and deciding the voltage
- Adjusting and checking the voltage of DC/DC pack (Vsetup, Vscw, -Vy)
- Adjusting the voltage wave form of Vset-down
- Measuring the Margin of Vset-up voltage and deciding the voltage
- Adjusting the wave form of final voltage

But, these items above can be changed by the consideration of mass production. (When changing the sequence, there should be an agreement of the Module development 2Gr./ QA Gr./ Manufacturing Gr.)

4) Without any special specification, you should adjust the Module in the environment of Temp (25±5°C) and Relative humidity (65±10%)

⚠ Caution
If you let the still image more than 10 minutes (especially The Digital pattern or Cross Hatch Pattern which has clear gradation), after image can be presented in the black level part of screen.

3. Adjustment items

3-1. Adjusting the Board Group
1) Adjusting the voltage wave form of Vset-up
2) Adjusting the voltage wave form of Vset-down
3) Adjusting the voltage wave form of Vramp

3-2 Adjustment after assembling

(PDP Module adjustment)
1) Setting up the initial voltage and adjusting the voltage wave form of Vsetup
2) Measuring the voltage Margin of Vs and deciding the voltage
3) Adjusting and checking the voltage of DC/DC pack (Vsetup, Vscw, -Vy)
4) Adjusting the voltage wave form of Vset-down
5) Measuring the Margin of Vset-up voltage and deciding the voltage
6) Adjusting the wave form of final voltage

4. Adjusting the Board Group
(Applying the Jig Set)

4-1. Using Tools
1) Digital oscilloscope: More than 200MHz
2) DVM (Digital Multimeter): Fluke 87 or similar one
3) Signal generator: VG-825 or similar one
4) DC power supply

- DC power supply for Vs (1) : Should be changeable more than 0-200V/ more than 10A
- DC power supply for Va (1) : Should be changeable more than 0-100V/ more than 5A
- DC power supply for 5V (1) : Should be changeable more than 0-10V/ more than 10A
- DC-DC Converter Jig (1) : The Jig which has voltage equivalent output of PDP42V6#### Module after taking the Vs, Va, 5V voltage
- Voltage stability of power supply : Within ±1% for Vs/Va, within ±3% for 5V

4-2. Connection diagram of measuring instrument and setting up the initial voltage
1) Connection diagram of measuring instrument Refer to Fig. 1.(Connection diagram of measuring instrument that adjusting the voltage wave form)

Formation and Specification of Module

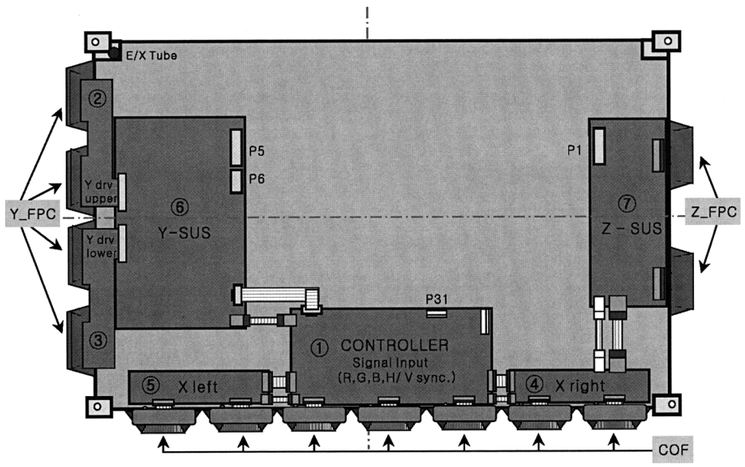

External Cable Connection

NO	Connector	Input Voltage & Signal
1	P1[Z SUS B/D]	5V, Va, Vs
2	P5[Y SUS B/D]	Vs
3	P6[Y SUS B/D]	5V
4	P31[CTRL B/D]	Video Signal

NO	Part No.		Description
①	6871QCH034A	PWB(PCB) ASSY	LVDS CTRL B/D ASSY
②	6871QDH066A	PWB(PCB) ASSY	Y DRV UPPER B/D ASSY
③	6871QDH067A	PWB(PCB) ASSY	Y DRV LOWER B/D ASSY
④	6871QRH037A	PWB(PCB) ASSY	X RIGHT B/D ASSY
⑤	6871QLH034A	PWB(PCB) ASSY	X LEFT B/D ASSY
⑥	6871QYH029A	PWB(PCB) ASSY	Y SUS B/D ASSY
⑦	6871QZH033A	PWB(PCB) ASSY	Z SUS B/D ASSY

2) Setting up the initial voltage
Initially setting up voltage : Vcc: 5V, Va: 65V, Vs: 185V But, Initially setting up voltage can be changed by the set up range according to the Module's characteristic.

4-3. How to Adjust
1) Adjusting the Voltage Wave form of Vsetup
- Connect measuring instrument like the connection diagram Fig. 1.
- Turn on the power of the measuring instrument like the **<Caution>** item Fig. 1.
- Connect the oscilloscope probe to P4 connecter (80 Pin) of Y-SUS PCB and GND.
- Turn the VR1 of Y-SUS PCB and make the "A" wave form Fig. 2 to be 20±1μs.

2) Adjusting Vset-down Voltage Waveform
Turn the VR2 of Y-SUS PCB and make the "B" wave form Fig. 2 to be 150±5μs.

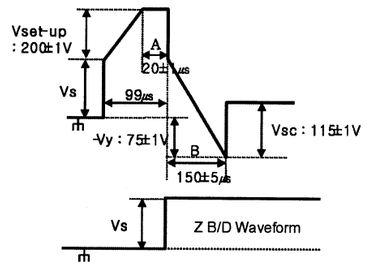

(Fig. 2) Y, Z set-up Waveform

3) Adjusting the Voltage Wave form of Vramp
- Connect oscilloscope Probe to the B37 Pin on Z PCB and the GND.
- Turn the VR3 of Z PCB and make the "C" waveform Fig. 3 to be 7μs.

But, in case of not setting up the Test point, produce same output and adjust waveform connect to other pattern or parts which has no possibility of short.

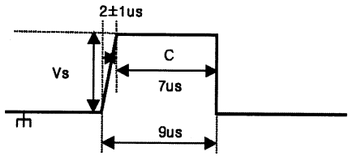

5. Adjustment after Assembling (PDP Module Adjustment)

5-1. Using Tools

1)Digital oscilloscope : More than 200MHz
2)DVM (Digital Multimeter): Fluke 87 or similar one
3)Signal generator: VG-825 or similar one
4)DC power supply
- DC power supply for Vs(1): Should be changeable more than 0-200V/ more than 10A
- DC power supply for Va (1): Should be changeable more than 0-100V/ more than 5A
- DC power supply for 5V (1): Should be changeable more than 0-10V/ more than 10A
- DC-DC Converter Jig (1): The Jig which has voltage equivalent output of PDP42V6#### Module after taking the Vs, Va, 5V voltage
- Voltage stability of power supply: Within ±1% for Vs/Va, within ±3% for 5V

5-2. Connection diagram of measuring instrument and setting up the initial voltage

1) Connection diagram of measuring instrument. Refer to figure 1. (Connection diagram of measuring instrument that adjusting the voltage wave form)
2) Setting up the initial voltage
Initially setting up voltage: Vcc: 5V, Va: 65V, Vs: 185V

But, Initially setting up voltage can be changed by the set up range according to the Module's characteristic.

5-3. How to Adjust

1) Adjusting initial voltage waveform
Check the voltage wave form like the mentioned way on the 4-3 (How to adjust) and readjust the wave form when it is wrong.

2) Checking the DC/DC pack voltage
- Convert the signal of signal generator to the 100% Full White signal
- Connect the GND terminal of DVM to the R30's right leg of the Y B/D and set the Plus terminal to the left leg of R30 to check the Vscw voltage (115±1V) and when there is abnormality in voltage turn the variable resistor (VR5) of DC/DC Pack (Vscw) on Y B/D to adjust.
- Connect the GND terminal of DVM to the R31's right leg of the Y B/D and set the Plus terminal to the left leg of R31 to check the -Vy voltage (-75 ±1V) and when there is abnormality in voltage turn the variable resistor (VR6) of DC/DC Pack (-Vy) on Y B/D to adjust.
- Connect the GND terminal of DVM to the R27's right leg of the Y B/D and set the Plus terminal to the left leg of R27 to check the Vsetup voltage (200±1V) and when there is abnormality in voltage turn the variable resistor(VR4) of DC/DC Pack(Vsetup) on Y B/D to adjust.

3) Measuring the Vs voltage Margin and deciding the voltage
- Convert the signal of signal generator to the 100% Full Red signal.
- Turn the voltage adjusting knob of Vs DC power supply to the voltage -down direction and make the cell of screen tumed off.
- Turn the voltage adjusting knob of Vs DC power supply to the voltage -up direction until the cell of screen tumed on. The first voltage, which make the cell of full screen turned on, is named as Vsmin1 and record it. Tum the voltage adjusting knob of Vs DC power supply to the voltage-up direction slowly until the cell of screen turned off or over electric discharge. The first voltage, which makes the cell of screen tumed off or over electric discharge, is named as Vsmax1 and records it. (Only, Vs voltage variable passes over the maximum 190V)

- Convert the signal of signal generator to the 100% Full Green signal.
- Repeat the adjustment (2) item and name each voltage as Vsmin2/Vsmax2 and record them.
- Convert the signal of signal generator to 100% Full Blue signal.
- Repeat the adjustment (2) item and name each voltage as Vsmin3/Vsmax3 and record them.

- Convert the signal of signal generator to 100% Full White signal.
- Repeat the adjustment (2) item and name each voltage as Vsmin4/Vsmax4 and record them.

- Convert the signal of signal generator to 100% Full Black signal.
- Repeat the adjustment (2) item and name each voltage as Vsmin5/Vsmax5 and record them.
- At this time decided Vs voltage adds 6V to Max value (Vsmin1~Vsmin5) and set up the voltage within the set-up range (180V < Vs ≤ 190V) in consideration of other features.
- Turn the voltage adjusting knob of Vs DC power supply make deciding the Vs voltage.
- Adjust Vset-down waveform using setting up Vs voltage like mentioned on the 4-3.

4) Adjusting the final voltage waveform
Check the voltage waveform like the mentioned way on the 4-3 (How to adjust) and re-adjust the waveform when it is twisted.

5) DC-DC Pack Voltage Set up Range
Vsetup: 185V ~ 225V
Vsc: 90V ~ 120V
-Vy: -60V ~ -80V

Trouble Shooting

1. Checking for no Picture
A screen doesn display at all and condition of black pattern or power off.

1) Check whether the CTRL B/D LED (D10, D11, D12, D13, D17) is turned on or not.
2) Check the power and signal cable of CTRL B/D.
3) X B/D, Y B/D, Z B/D is well plugged in.
4) Check the connection of X B/D, Y B/D and Z B/D to CTRL B/D.
5) Measure the output wave of X, Y, Z B/D with oscilloscope (more than 200Mhz) and find the fault of B/D by comparing the output wave with following figures.

- Measure Point fo Y B/D : TP (Bead B103)
- Measure Point fo Z B/D : TP (Bead B37)
- Measure Point fo X B/D : COF TP

6) Check the SCAN (Y side) IC
7) Check the DATA (X side) COF IC
8) Replace the CTRL B/D.

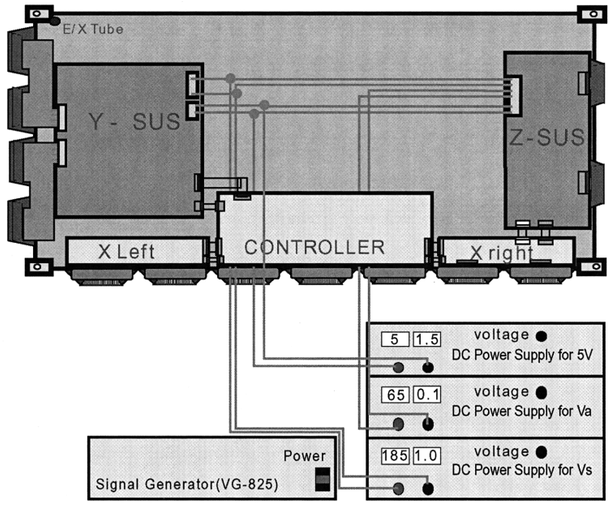

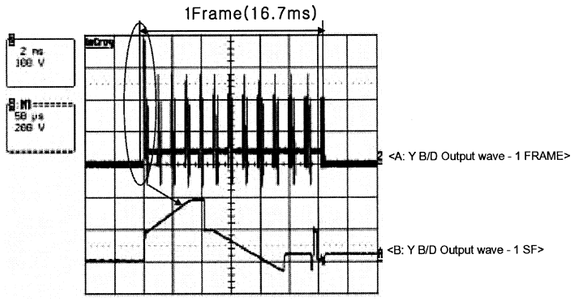

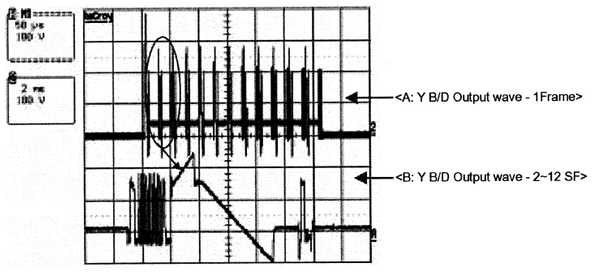

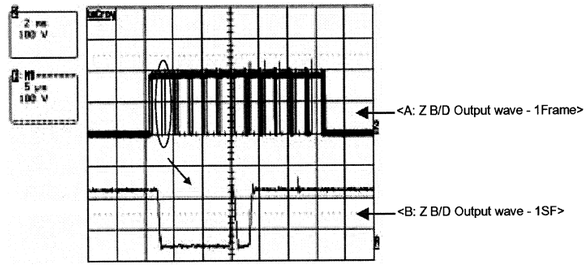

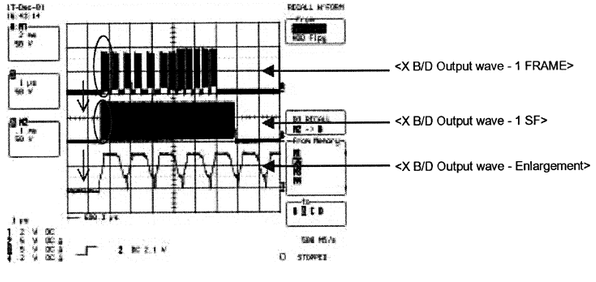

2. Diagnosis Following Display Condition

2-1. 4/7 or 3/7 of the screen doesn't appear

1) Confirm the power connector of X B/D is well plugged in.
2) Confirm the connection between CTRL B/D and X B/D.
3) If fault still present, replace relevant X B/D.

*** Relationship between screen and X B/D**

Screen	X B/D
Left of the Screen 4/7 <-->	Right X B/D
Right of the Screen 3/7 <-->	Left X B/D

* **Screen Display Form**

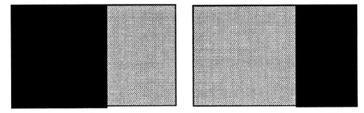

2-2. The screen doesn't show Data COF

1) Confirm the connection between Data COF and X B/D.
2) Confirm whether the Data COF has failed and replace X B/D

*** Example of the screen display form (Anything of the 7 Data COF can be shown)**

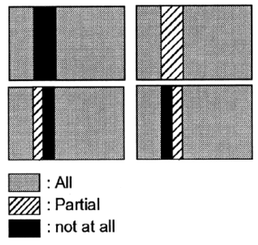

* **How to examine Data COF IC**

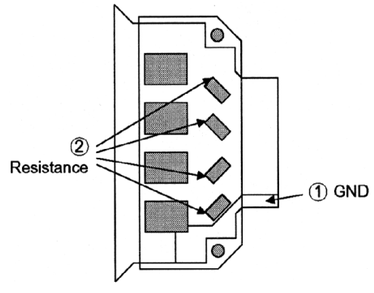

- Change '(1) GND' into ANODE, '(2) Resistance' into CATHOD and then examine the Diode to the forward or reverse direction.
- Measure the resistance value (10Ω)

2-3. It Generates Unusual Pattern of Data COF IC unit

1) In case of generating unusual pattern of Data COF IC unit as following picture, there is problem in the check that is input into Data COF IC
2) In case of <case 1, 2, 3>
- Confirm the connection of Data COF connector
- Replace the relevant X B/D

3) In case of <case 4, 5>
- Confirm the connection from CTRL to X B/D
- If fault still present, replace relevant XB/D or CTRL B/D

*** Screen Display Form**

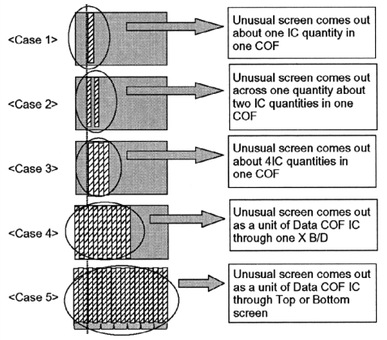

2-4. Regular Stripe is Generated about the Quantity of one Data COF IC or more

1) In case of generating regular stripe about the quantity of one Data COF IC, there is a problem at the output of output-flatworm of X B/D
In case of generating regular stripe about the quantity of two Data COF IC, that means the data which is conveyed from CTRL B/D doesn't conveyed well.
2) Confirm the XB/D connection connector plugged in well.
3) If fault still present, replace relevant XB/D or CTRL B/D.

*** Relationship between screen and X B/D**

Screen	X B/D
Left of the Screen 4/7 <-->	Right X B/D
Right of the Screen 3/7 <-->	Left X B/D

*** Screen Display Form**

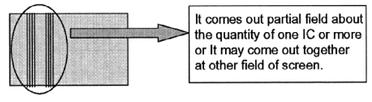

2-5. The screen display has a problem for Scan FPC

1) There may be a problem between Scan FPC and Y B/D.
2) Check the connection of Y B/D and Scan FPC.
3) If the Scan IC has failed, replace the Y DRV B/D.

*** Screen Display Form**

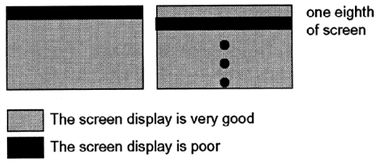

*** Check Function of Scan IC**

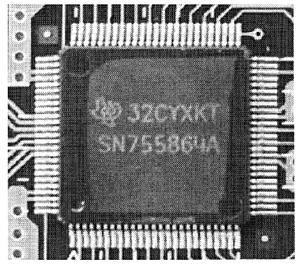

LG PDP42V6

2-6. The screen has a vertical line with regular gap. (A vertical stripe flash at special color)

1) This is a problem with control B/D.
2) Replace Control B/D.

* **Screen Display Form**

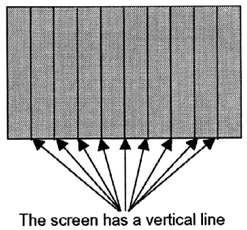

The screen has a vertical line with regular gap

2-7. A data copy is happened into vertical direction

1) In this case, it's due to incorrect marking of scan wave.
2) Replace Y DRV B/D or Y SUS B/D.

*** Screen Display Form**

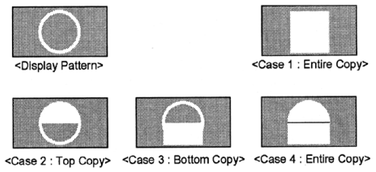

2-8.The screen has one or several vertical line

1) In this case, It isn't a problem with controller B/D or X B/D.
2) It may be one of the following.
- Panel is out of order
- Open or short of DATA COF FPC attached panel
- DATA COF attached panel is out of order
3) Replace Module.

* **Screen Display Form**

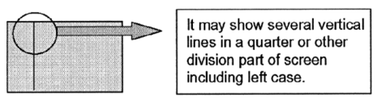

2-9. The screen has one or several horizontal lines

1) In this case, there isn't a problem with controller B/D or X B/D.
2) It may be one of the following.
- Panel is out of order
- Open or short of SCAN FPC attached panel
- SCAN IC attached panel is out of order
3) Replace Y DRV B/D

*** Screen Display Form**

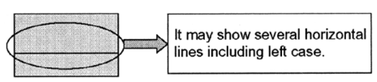

2-10. The screen displays input signal pattern but the brightness is dark

1) In this case, Z B/D operation isn't complete.
2) Check the power cord of Z B/D.
3) Check the connector of Z B/D and Controller B/D.
4) Replace the Controller B/D or Z B/D.

2-11. The screen displays other color partially on full white screen or discharges partially on full black screen.

1) Check the declination of Y B/D set up, set down wave.
2) Check the declination of Z B/D ramp wave.
3) Measure each output wave with oscilloscope (more than 200Mhz) and compare the data with below figure data. Adjust the Y B/D set up (Test-up: B/C set down (Test-down: D) and Z B/D ramp (ramp: F/G) declination by changing VR1/VR2/VR3.

- Measuring Point of Y B/D : B103 (SUS_UP)
- Measuring Point of Z B/D : B37 (SUS_OUT)

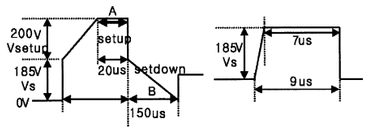

Y Output Voltage Wave form Z RAMP Voltage Wave form

2-12. A center of screen is darker than a edge of screen at full white pattern.

1) In this case, it's a problem with Z B/D ramp wave.
2) Check the connection cable of Z B/D and CTRL B/D.
3) Replace the Z B/D.

*** Screen Display Form**

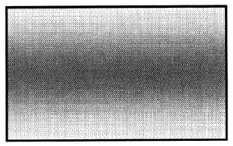

2-13. It doesn't display a specified brightness at specified color

1) Check the connector of CTRL B/D input signal.
2) Replace the CTRL B/D.

3. Checking for component damage

3-1. Y IPM (IC12) or Z IPM (IC4) damage

1) When the internal Sustain_FET of Y IPM (IC 12) or Z IPM (IC 4) is damaged, screen doesn't be shown or electrical discharge is generated.
- Test Point: GND~B103(Y B/D), GND~B37(Z B/D)
- Wave format: B103 (Y B/D) or B37 (Z B/D) has no wave output

2) When the internal ER_FET of Y IPM (IC 12) or Z IPM (IC 4) is damaged, Y IPM or Z IPM emission is increased.
- Test Point: GND~B103 (Y B/D), GND~B37(Z B/D)
- Wave format: As shown (Fig. 1)

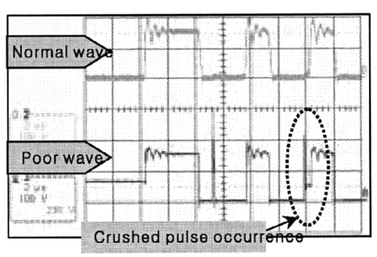

(Fig. 1) When the ER_FET is damaged

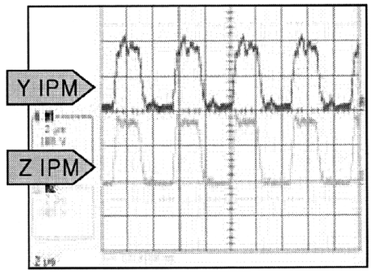

<IPM Normal Output Wave >

- Measurance position: Sustain section enlarge the after measuring B103 wave of Y B/D and B37 wave of Z B/D. (Full White Pattern)

3-2. FET Ass'y (Y B/D: HS1) damage

1) When Set_Up FET is damaged, screen doesn't appear
- Test Point: Enlarge after measuring GND~B103 (Y B/D)
- Wave format: As shown (Fig. 2)

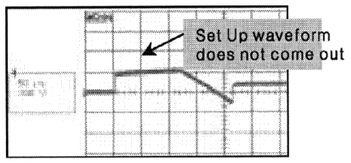

(Fig. 2) When the Set_Up FET is damaged

2) When Set_Down FET is damaged, electric discharge of entire screen is generated.
- Test Point: Enlarge the after measuring GND~B103 (Y B/D)
- Wave format: As shown (Fig. 3)

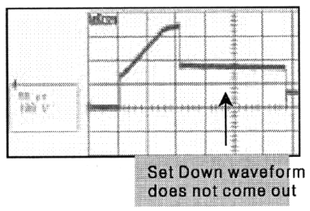

(Fig. 3) When the Set_Down FET is damaged

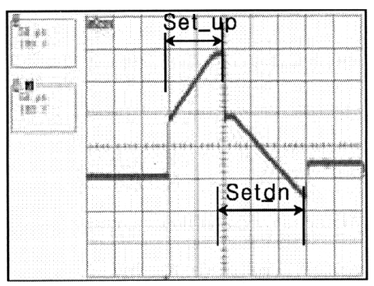

<FET Ass'y Normal Output Wave >

3-3. SCAN IC (Y drv B/D: IC1~8) damaged

1) In case of SCAN IC poor, one horizontal line may appear on screen.
- Test Point: ICT measurance of GND~Y drive B/D output
- Wave format: As shown (Fig. 4)

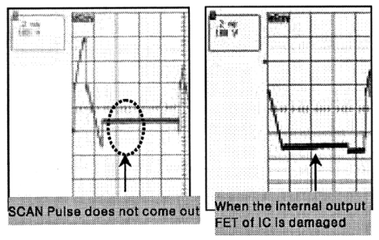

(Fig. 4) When SCAN IC is poor

2) Screen may not appear when SCAN IC is damaged by SCAN IC poor, external electricity or spark.
- Test Point: ICT measurance of GND~Y drive B/D output
- Wave format: Output wave format isn't output (You can see the damage for Y drive B/D Top or Bottom's SCAN IC)

3) Screen shaked horizontally when Y dry B/D Top and Bottom cable is poor
- Test Point: ICT measurance of GND~Y drive B/D output
- Wave format: As shown (Fig. 5)

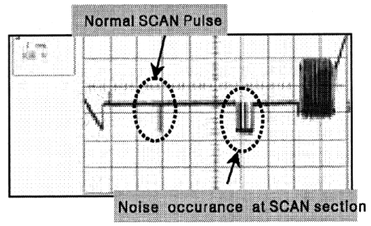

(Fig. 5) When Y drv B/D Top and Bottom cable is poor

4) In case of shorting the SCAN IC output by a dust, foreign substance, it may overiap two horizontal lines on screen.
- Test Point: ICT measurance of GND~Y drive B/D output
- Wave format: As shown (Fig. 6)

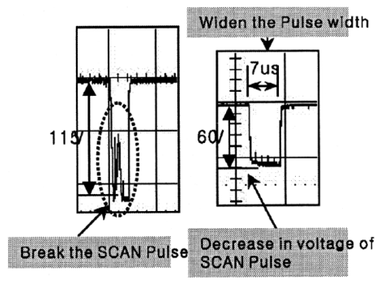

(Fig. 6) When SCAN IC output is short

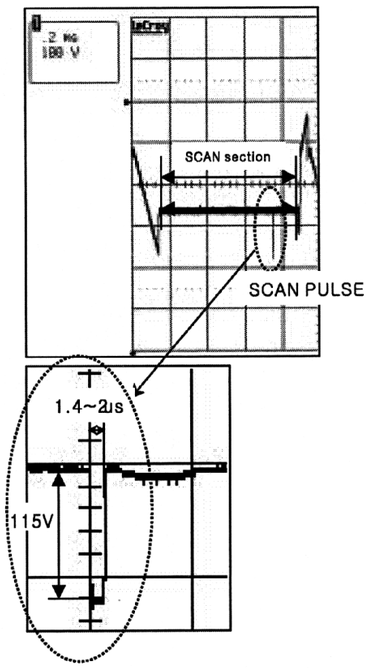

<SCAN IC Normal Output Wave >

- Measuring position: SCAN section enlarge the after measuring output ICT of Y drive B/D. (Pull White Pattern)

3-4. COF damage

1) In case of shorting or opening the IC output of COP, it may show one or several vertical lines.
- Test Point: Enlarge the after measuring output TP of GND~COF
- Wave format: As shown Output of (Fig. 7)

In case of normal wave output, when STB signal is generated, maintain High output. And when STB signal is generated again must be fall Low.
But when IC of COF is poor, STB signal is not generated Output falls with Low.

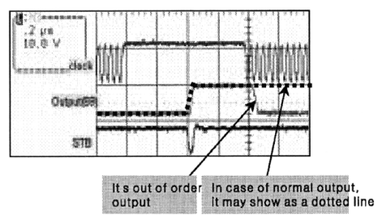

(Fig. 7) When IC output of COF is poor

2) In case of being damage IC of COF or power resistance, the screen doesn't be shown or happens discharge partially.
- Test Point: Enlarge the after measuring output TP of GND~COF
- Wave format: Output wave doesn't appear

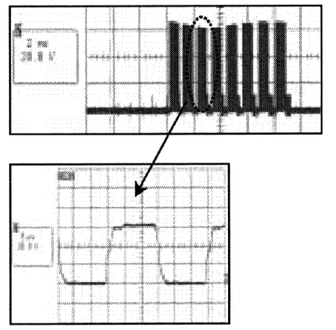

<COF Normal Output Wave >

3-5. Crystal (CTRL B/D: X1) damage

1) When Crystal is damaged, the screen doesn't appear.
- Test Point: Measuring 3pin of GND~Crystal (Ctrl B/D: X1)
- Wave format: Output wave doesn't come out

2) In case of unusual launch of the Crystal, it may blink the screen.
- Wave format: As shown (Fig. 8)

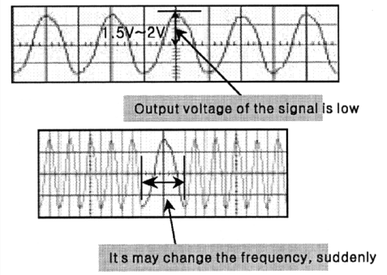

(Fig. 8) When Crystal is poor

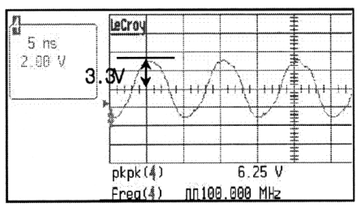

<Crystal Normal Output Wave >

- Measuring position: Measuring output 3pin of Crystal (X1:100MHZ) on Ctrl B/D (Full White Pattern)

PART LIST

	Part Codes	Part Definition	Quantity
BOARDS AND MODULES	031491	PLUG AC INLET TWO PHASE NOISE FILTER	1
	R79110	L6B PDP CHASIS 42"	1
	R82172	CU ASSY 42P6L43	1
	R82175	SPEAKER BOARD COMPLETED L6B PDP 42"	1
	R82185	SCART BOARD COMPLETED L6B PDP 42"	1
	X47102	PDP 42" LG V6 PANEL VE PW SP.DAEGIL PSU	1
	ZR1910	ADAPTOR SPS 180W 24/5 12/5 PFC 2PIN(LISH	1
	ZR4187R	R/C L6B SASI REMOTE CONTROL JAECS SILVER	1
BRAND-BEKO/TEST 42P6B43 SIL CU	038980R	MAIN CABLE PC/MONITOR 2MT EUROWITH FERR	1
	X24251F	FRONT COVER 42"PDP B43 WITH KEY.B.SIL.P.	1
CU ASSY 42P6L43	010860R	TACT SW LONG STEN	1
	303447R	LED 3MM RED-BLUE LIGITEK LSRFSBK2092	1
	452521R-1	IR RECEIVER TSOP34838 SS1A	1
	R82174	CU PN 42P6L43 (X24193-01)	1
FRONT FRAME 42P6B43 SILVER(V6)	010690R	ROCKER SWITCH R19 DPST	1
	R73028	MESH FILTER (E)M4213JW0345L S1(SKC)V6	1
	R79356	42" PDP L6B V6 AV BOARD BOX	1
	R79357	42" PDP L6B V6 AV BD BOX BACK COV.BOT	1
	R79362	42" PDP L6B LG V6 PW BOARD MONT.SH. IRON	1
	R79363	42" PDP L6B LG V6 PW BD MONT.SH. IRON EA	1
	X24204F	LENS IR/LED 42" PDP MODELP	1
	X24262F	"KNOB PRG UP/DOWN SIL. P.ED 42""PDP MOD.	1
	X24330	FRONT COV.ALU.SUP.RIG/LEFT LG-SDI+EMI+CU	1
	X24331	FRONT COVER ALU.SUPP.BOTTOM LG+EMI+CUSH	1
	X24332	FRONT COVER ALU.SUPP.TOP LG+EMI+CUSHION	1
	X24355	42" PDP BACK COVER B43/B41 MODEL	1
	X24359	42" PDPLG PANEK BRIDGE RIGHT	1
	X24360	42" PDPLG PANEK BRIDGE LEFT	1
	X24380	42" PDP ANGLE IRON	1
	X24805	STROPOR TOP LEFT-RIGHT 42 PDP PLS	1
	X24806	STROPOR BOT.LEFT-RIGHT 42 PDP PLS	1
	X41359	42" PDP PANEL CONNECTION PART LG V6	1
	X52372	42" PDP BACK COVER COMP.SCREW(M8)	1
L6B CHASSIS	031194	CONN.HOUS.4P 2317-4S JST B 4B-XH-A WHITE	1
	031245	CONN.HOUS.2P 2317-2S JST B 2B-XH-A WHITE	1
	031251	SCART SOCKET 14.1	2
	031299	CONN.HOUS.10P 2317-10S JST4B-XH-A BEYAZ	1
	031358	CONN. VGA B10B	1
	031423R	HEADPHONE JACK YKB21-5103	1
	031476	CONN.HOUSING.12P 2MM 89400-1210 MOLEX	1
	031508R	CONN. RF IEC TO RCA	1
	031658	CONN.HOUSING.10P 2MMM 89400-1010 MOLEX	1
	031769R	CONN.HOUS.4P 2317-4S JST B 4B-XH-A RED	1
	031795	KONN.S-VHS	1
	032945R	CONN.MALE 2*15 30LU MOLEX 53505-3090	1
	053352R	COIL- CHOKE 10UH R0814 14.1	4
	053500R	COIL 10UH K AXIAL LAL04	2
	053725R	COIL-CHIP 10UH %20/0805	18
	053782R	COIL 47UH K LAL04	2
	053881R	COIL 1UH K LAL04 AXIAL	4
	053901R	COIL SHOKE TOROID 100UH M 0.07R	2
	054290	FUSE 5.0A 250V ROUND	2
	054290R	FUSE 5.0A 250V ROUND	2
	055622R	FERRIT BEAD-CHIP 100MHZ 4A	2
	055628	FERRIT ARRAY 1K BK32164M102-T/1206 T&R	1
	055628R	FERRIT ARRAY 1K BK32164M102-T/1206 T&R	1
	056010R	SAW FILTER OFW K9656M	2
	056013R	CRYSTAL 4 MHZ HC49-U	2
	056119	CRYSTAL 14.31818MHz CL=18PF30/30PPMHC49U	1
	056119R	CRYSTAL 14.31818 MHz / HC49U	1
	056121R	CRYSTAL 10 MHz / HC49U 20PF 30PPM	1
	056708R	SAW FILTER OFW K3958M	2
	056753R	CRYSTALL 24.576MHZ 20PF 30PPM	2
	056952R	CRYSTAL 18.432MHZ +-30PPM	1
	102397R	CFR 3.9K J 1/4W /6 52MM	1
L6B CHASSIS	111395R	RMO 390R J 1W	2

	Part Codes	Part Definition	Quantity
	170102R	RC-CHIP 10R J 1/8W /1206	2
	170112R	RC-CHIP 2K J 1/16W /0603 TAPE	1
	170154R	RC-CHIP 150R J 1/16W /0603 TAPE	3
	170181R	RC-CHIP 18R J 1/16W /0603	8
	170474R	RC-CHIP 47R J 1/16W /0603 TAPE	12
	170560R	RC-CHIP 56R J 1/16W /0603 TAPE	8
	170686R	RC-CHIP 68R J 1/10W /0603	3
	170751R	RC-CHIP 75R J 1/10W/0603	15
	171108R	RC-CHIP 100R J 1/10W /0603	51
	171224R	RC-CHIP 220R J 1/16W/0603 TAPE	4
	171275R	RC-CHIP 270R F 1/10W /0603	1
	171336R	RC-CHIP 330R J 1/16W /0603 TAPE	3
	171472R	RC-CHIP 470R J 1/16W /0603 TAPE	3
	171562	RC-CHIP 560R J 1/16W/0603 TAPE	1
	171562R	RC-CHIP 560R J 1/16W/0603 TAPE	1
	171683R	RC-CHIP 680R J 1/16W /0603	7
	171824R	RC-CHIP 820R J 1/16W /0603 TAPE	1
	172104R	RC-CHIP 1K J 1/16W /0603	2
	172111R	RC-CHIP 1K J 1/10W /0603	32
	172112	RC-CHIP 1K 1% 1/10W /0603	2
	172112R	RC-CHIP 1K 1% 1/10W /0603	2
	172228R	RC-CHIP 2.2K J 1/10W /0603	5
	172336R	RC-CHIP 3.3K J 1/16W /0603	14
	172393R	RC-CHIP 3.9K J 1/16W/0603 TAPE	1
	172473R	RC-CHIP 4.7K J 1/10W /0603	37
	172567R	RC-CHIP 5.6K J 1/16W /0603 TAPE	2
	172686	RC-CHIP 6.8K J 1/16W /0603	2
	172686R	RC-CHIP 6.8K J 1/16W /0603	2
	172824R	RC-CHIP 8.2K J 1/16W /0603 TAPE	1
	173100R	RC-CHIP 10K J 1/10W /0603	23
	173108R	RC-CHIP 10K J 1/16W /0603	2
	173124R	RC-CHIP 12K J 1/16W /0603 TAPE	4
	173228R	RC-CHIP 22K J 1/10W /0603	6
	173229	RC-CHIP 22K J 1/16W /0603	2
	173229R	RC-CHIP 22K J 1/16W /0603	2
	173332R	RC-CHIP 33K J 1/16W /0603 TAPE	2
	173563R	RC-CHIP 56K J 1/16W /0603	2
	174152R	RC-CHIP 150K J 1/16W /0603 TAPE	2
	175105R	RC-CHIP 1M J 1/16W/0603 T&R	2
	175221R	RC-CHIP 2.2M J 1/16W /0603	1
	179005R	RC-CHIP 0R /0603 1.6*0.8 TAPE	75
	179475R	RC-CHIP 4.7R J 1/16W/0603	2
	190471R	R-ARRAY-CHIP 47R*4/YC16	25
	250332	EC 3.3UF 50V 11*5 R:5	1
	250332R	EC 3.3UF 50V 11*5 R:5	1
	250333R	EC 3.3UF 16V 11*5 R:5	1
	251112R	EC 10UF 50V RS 11*5 TAPING R=5MM	9
	251222R	EC 22UF 50V RS 11*6.3 TAPING	8
	251475R	EC 47UF 63V 11*6.3 R:5	13
	252105R	EC 100UF 50V 12*8 R:5	6
	252112R	EC 100UF 16V 11*6 R:5	28
	252241R	EC 220UF 35V WL 16*8 LESR/HRPL	2
	253109	EC 1000UF 35V 30*10 R:5	4
	273121R	C-PEM 10NF J 100V R:5	5
	274227	C-PEM 220NF J 50V R:5	4
	274227R	C-PEM 220NF J 50V R:5	4
	274474R	C-PEM 470NF J 63V R:5	6
	280107R	TC-CHIP 1UF 25V /A3216	2
	280225R	TC-CHIP 2.2UF 10V /A3216	2
	290019R	CC-CHIP 1.8PF C 50V/0603 NPO	2
	290107R	CC-CHIP 10PF J 50V /0603 NPO TAPE	5
	290122R	CC-CHIP 12PF J 50V /0603	3
	290186R	CC-CHIP 18PF J 50V /0603 NPO	5
	290223R	CC-CHIP 22PF J 50V /0603 NPO TAPE	2
	290335R	CC-CHIP 33PF J 50V /0603 NPO TAPE	1
	290390R	CC-CHIP 39PF J 50V /0805 NPO	4
	290391R	CC-CHIP 39PF J 50V /0603 NPO	6
L6B CHASSIS	290475R	CC-CHIP 47PF J 50V /0603 NPO TAPE	3
	291104R	CC-CHIP 100PF J 50V /0603 NPO	4

	Part Codes	Part Definition	Quantity
	291155R	CC-CHIP 150PF J 50V /0603 TAPE	10
	291393	CC-CHIP 390PF J 50V /0603 NPO TAPE	2
	291393R	CC-CHIP 390PF J 50V /0603 NPO TAPE	2
	292114R	CC-CHIP 1NF K 50V /0603 X7R	51
	292115R	CC-CHIP 1NF J 50V /0603	4
	292153R	CC-CHIP 1.5NF K 50V /0603 X7R TAPE	2
	292392R	CC-CHIP 3.9NF K 50V /0603 X7R	1
	292475R	CC-CHIP 4.7NF K 50V /0603 X7R	2
	293391R	CC-CHIP 39NF K 50V /0603 X7R	1
	293478R	CC-CHIP 47NF K 25V /0603 X7R TAPE	36
	294122R	CC-CHIP 100NF K 50V /0603 X7R	205
	294234R	CC-CHIP 220NF K 16V /0603 X7R	27
	294476R	CC-CHIP 470NF K 16V /0805 X7R	6
	302318	DIODE Z. BZX55C33 52MM	1
	302318R	DIODE Z. BZX55C33 52MM	1
	302948R	DIODE 1N4007	1
	303180-AS	DIODE 1N5820 SCHOTTKY FERRIT	2
	303195R	DIODE 4148 MELF SOD-80C	8
	303197	DIODE BAV70	2
	303197R	DIODE BAV70	2
	303223R	DIODE-CHIP BA682 SOD80	2
	303420	DIODE-CHIP BA591 SOT323 TAPE	2
	303818R	DIODE-CHIP BAV99LT1 SOT23 T&R	9
	303864R	DIODE Z.TZMC5V6-5.6V SOD80C	2
	303867R	DIODE-CHIP SL23 DO214AA	4
	401141R	TRN-CHIP BC848BLT1G SOT23	25
	401372R	TRN FDS9933A	1
	451569R	IC-CHIP TDA9886T/V3 118(SO24) T&R	2
	452863R	IC MT48LC4M16A2P-7E SDRAM 54PIN TSOP	1
	453007	IC LM2596S-5.0	1
	453095R	IC-CHIP NCP1117DTARK G (DPAK) T&R TO252	1
	453124R	IC-CHIP NCP1117DT33RK G TO-252 PACKAGE	4
	453195R	IC PI5V330WEX SOIC(W)	1
	453233	IC-CHIP AM29LV160DB-90EC (TRAY)TSOP48	1
	453261	IC-CHIP 24LC21A-I/SN-CMOS18K/2.5V SE.T&R	2
	453262R	IC-CHIP AD9887AKSZ-100 DUAL IN.FACE TRAY	1
	453263R	IC-CHIP AT24C64AN-10SU-2.7 SO8 T&R	1
	453271R	IC-CHIP TEA6415CDT -VIDEO-MAT-SW.T&R	1
	453294R	IC-CHIP LM2576D2TR4-005V 3A TO263 STPT&R	1
	453310R	IC-CHIP SAA7118E/V1/M5 BGA156 T&R	2
	453346R	IC-CHIP PW1231A L	1
	453347R	IC-CHIP PW181A-10V L BGA352	1
	453349R	IC-CHIP TLC7733 /SO8	1
	453350R	IC-CHIP PCF8591 /SO16	1
	453351R	IC-CHIP TEA6420DT T&R	1
	453352R	IC-CHIP MSP3410-MQFP64	1
	453428R	IC-CHIP LM317MDTRK G TO-252 T&R	1
	453494R	IC-CHIP TRIPATH TA2024 STEREO CLAS-D T&R	1
	453921R	IC-CHIP DS90C385A MTD56	1
	R84501R	CABLE L=65MM GREEN AWG28	1
	Y11136R	TUNER HOR.PHILLIPS UV1316/A I H-4	1
	Y11501R	CABLE RF TUNER L=50MM L5B PH.TUN.	1
	Y51136RPH1	TUNER PH UV1316T/SIGH-3 SPL ASIMTRK YAT	1
	Y51501R	CABLE PIP TUNER L=230MM	1
L6B PDP 42" CABLE V6 PANEL	055145R	FERRIT CORE Z=276R (100MHZ) STEWARD	1
	R79525R	KONN.CAB.4PL=150MM 250G2-H04 FERRIT	1
	R82523-AS	CABLE L6B PDP 42" POW.SUP.2 PIN L=530MM	1
	R82527-AS	CABLE WITH.TERM.L=500MM YEL-GR AWG22	1
	R82535-AS	CABLE WITH.KON.2P L=480+340MM FERRIT	1
	X56523-AS	CABLE WITH TERM SW-LINE FILTRE L=110MM	1
	X56525-AS	CABLE WITH.KONN.2P L=60MM	1
	X56525R	CABLE WITH.KONN.2P L=60MM	1

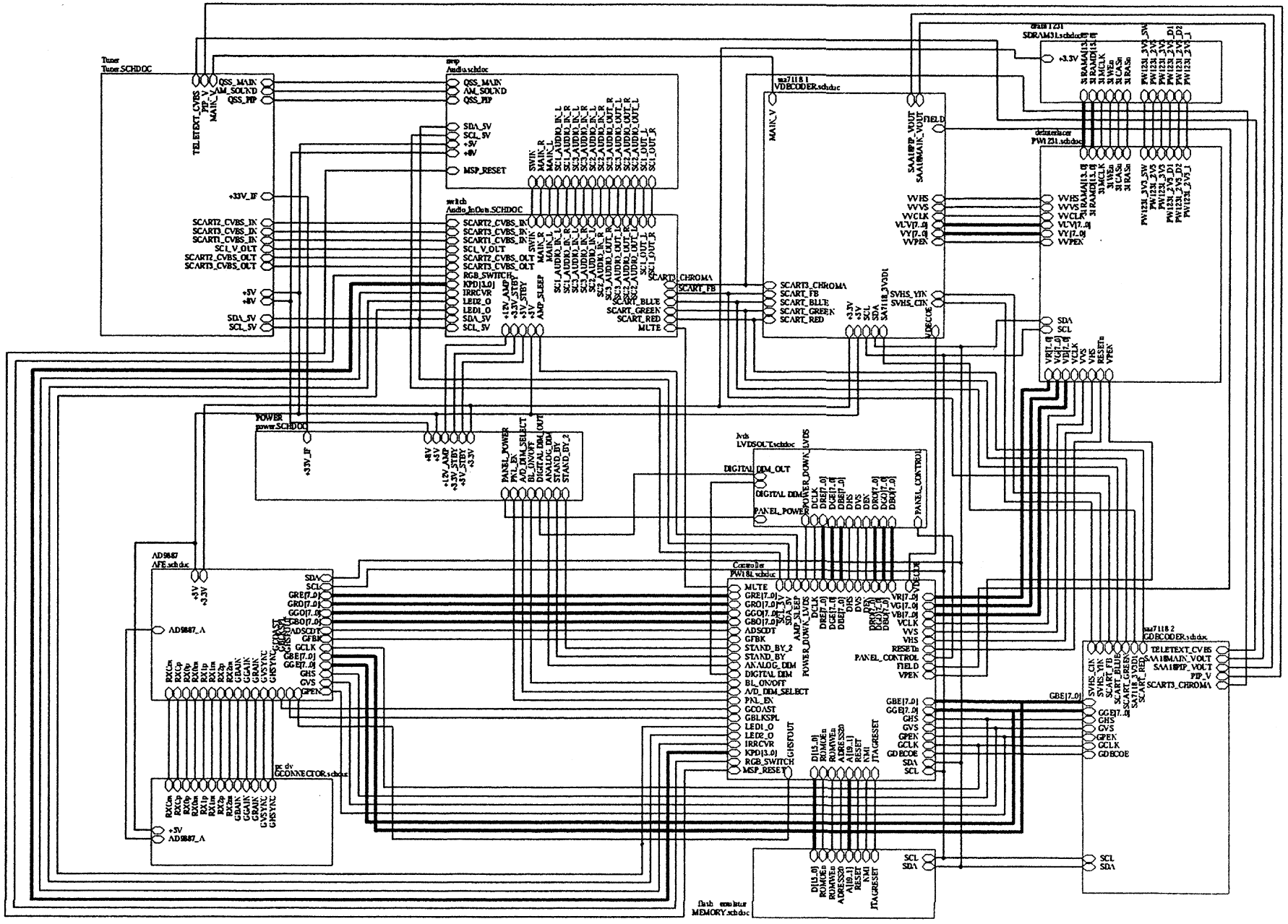
Tuner
Tuner.SCHDOC
TELETEXT_CVBS
PIP_V
MAIN_V
QSS_MAIN
AM_SOUND
QSS_PIP
msp
Audio.schdoc
SDA_5V
SCL_5V
+5V
+8V
MSP_RESET
SWIN
MAIN_R
MAIN_L
SC1_AUDIO_IN_L
SC1_AUDIO_IN_R
SC3_AUDIO_IN_L
SC3_AUDIO_IN_R
SC2_AUDIO_IN_L
SC2_AUDIO_IN_R
SC3_AUDIO_OUT_R
SC3_AUDIO_OUT_L
SC2_AUDIO_OUT_R
SC2_AUDIO_OUT_L
SC1_OUT_L
SC1_OUT_R
+33V_IF
SCART2_CVBS_IN
SCART3_CVBS_IN
SCART1_CVBS_IN
SC1_V_OUT
SCART2_CVBS_OUT
SCART3_CVBS_OUT
switch
Audio_InOuts.SCHDOC
RGB_SWITCH
KPD[3..0]
IRRCVR
LED2_O
LED1_O
+12V_AMP
+3.3V_STBY
+5V_STBY
AMP_SLEEP
SCART3_CHROMA
SCART_FB
SCART_BLUE
SCART_GREEN
SCART_RED
MUTE
+3.3V
SDRAM31.schdoc
SAA18MAIN_VOUT
FIELD
deinterlacer
PW1231.schdoc
VVHS
VVVS
VVCLK
VLV[7..0]
VY[7..0]
VVPEN
SVHS_YIN
SVHS_CIN
SDA
SCL
VR[7..0]
VG[7..0]
VB[7..0]
VCLK
VVS
VHS
RESETn
VPEN
POWER
power.SCHDOC
PANEL_POWER
PNL_EN
A/D_DIM_SELECT
BL_ON/OFF
DIGITAL DIM_OUT
ANALOG_DIM
STAND_BY_2
lvds
LVDSOUT.schdoc
DIGITAL DIM_OUT
DIGITAL DIM
PANEL_POWER
POWER_DOWN_LVDS
DCLK
DRE[7..0]
DGE[7..0]
DBE[7..0]
DHS
DVS
DEN
DRO[7..0]
DGO[7..0]
DBO[7..0]
PANEL_CONTROL
AD9887
AFE.schdoc
+5V
+3.3V
AD9887_A
SDA
SCL
GRE[7..0]
GRO[7..0]
GGO[7..0]
GBO[7..0]
ADSCDT
GFBK
GCLK
GBE[7..0]
GGE[7..0]
GHS
GVS
GPEN
RXCm
RXCp
RXOp
RXOm
RX1p
RX1m
RX2p
RX2m
GBAIN
GGAIN
GRAIN
GVSYNC
GHSYNC
Controller
PW181.schdoc
MUTE
GRE[7..0]
GRO[7..0]
GGO[7..0]
GBO[7..0]
ADSCDT
GFBK
STAND_BY_2
STAND_BY
ANALOG_DIM
DIGITAL DIM
BL_ON/OFF
A/D_DIM_SELECT
PNL_EN
GCOAST
GBLKSPL
LED1_O
LED2_O
IRRCVR
KPD[3..0]
RGB_SWITCH
MSP_RESET
VR[7..0]
VG[7..0]
VB[7..0]
VCLK
VVS
VHS
RESETn
PANEL_CONTROL
FIELD
VPEN
GBE[7..0]
GGE[7..0]
GHS
GVS
GPEN
GCLK
GDECOE
SDA
SCL
GHSFOUT
D[15..0]
ROMOEn
ROMWEn
ADRESS20
A[19..1]
RESET
NMI
JTAGRESET
pc dv
GCONNECTOR.schdoc
+5V
AD9887_A
flash emulator
MEMORY.schdoc
SCL
SDA
SAA18MAIN_VOUT
SAA18PIP_VOUT
PIP_V
SCART3_CHROMA
GBE[7..0]
GGE[7..0]
GHS
GVS
GPEN
GCLK
GDECOE
SCL
SDA

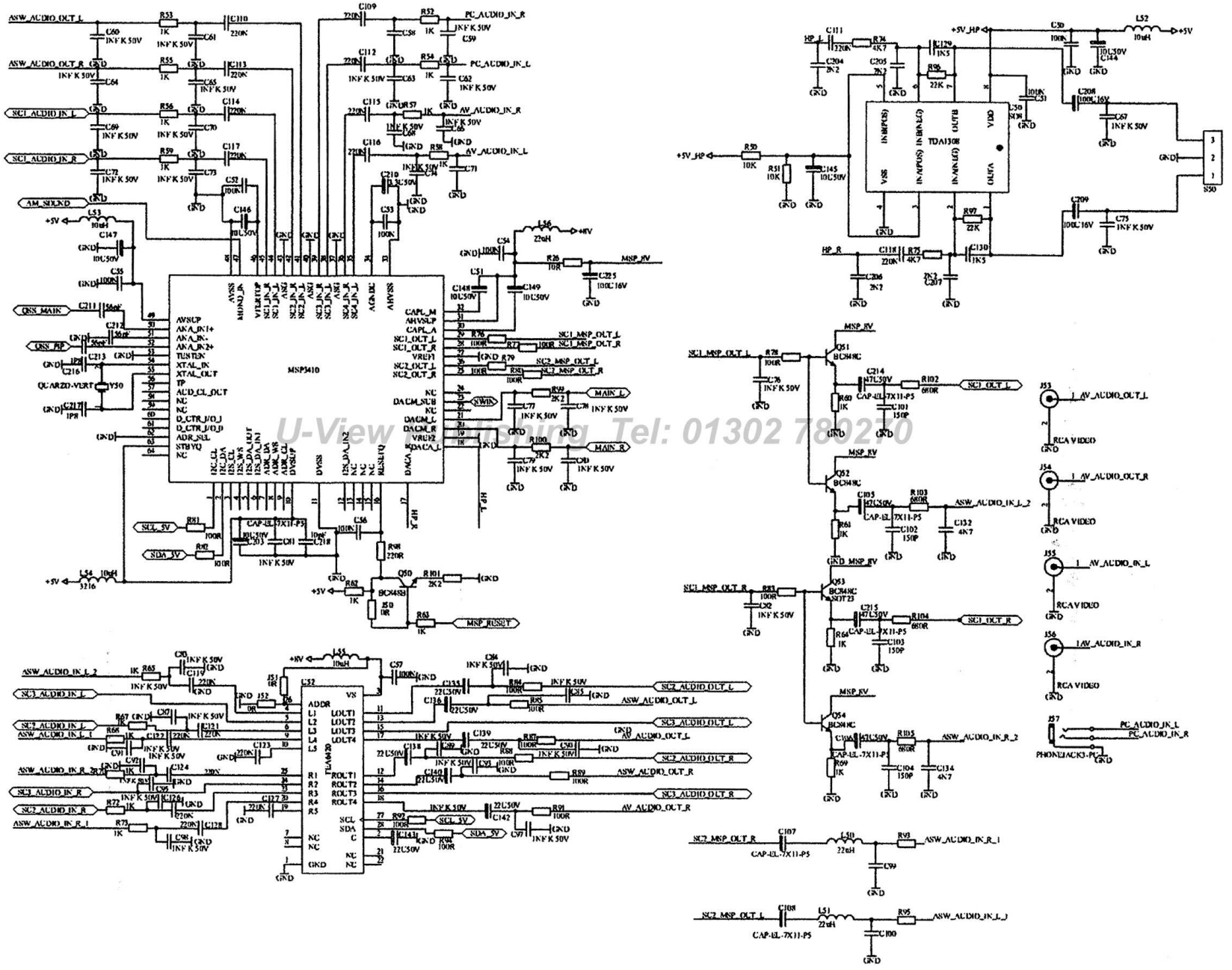

U-View Publishing Tel: 01302 780270

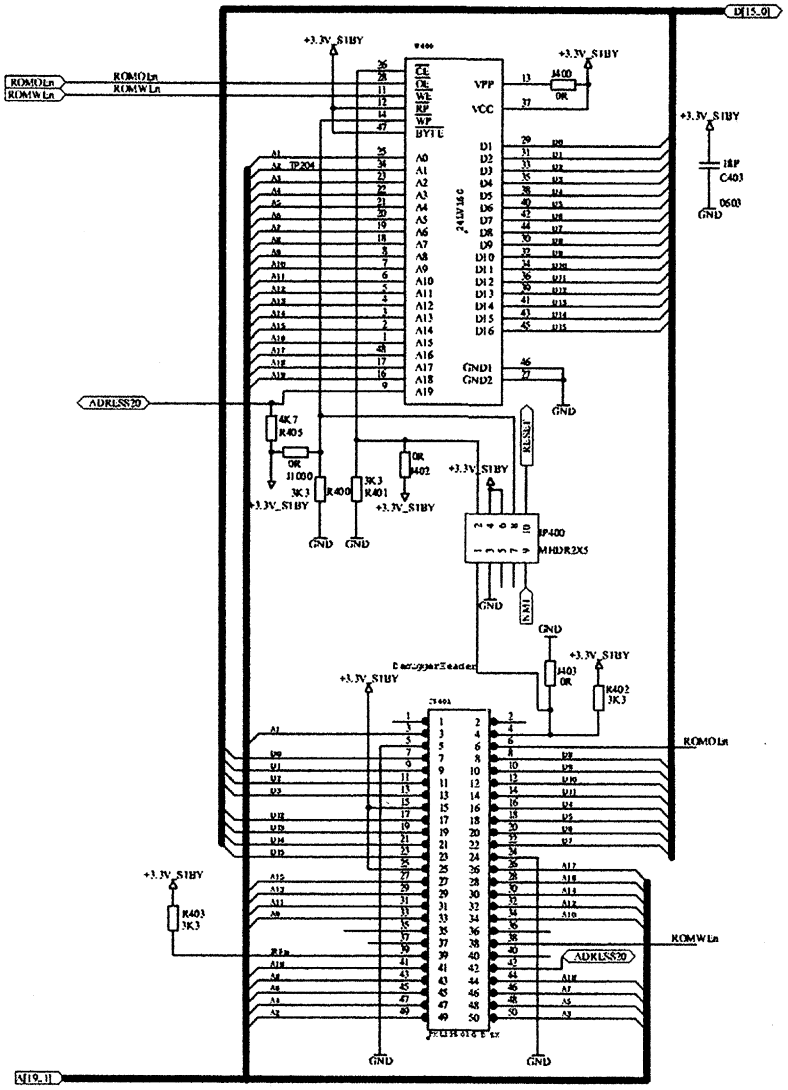

FLASH MEMORY -RESET IC

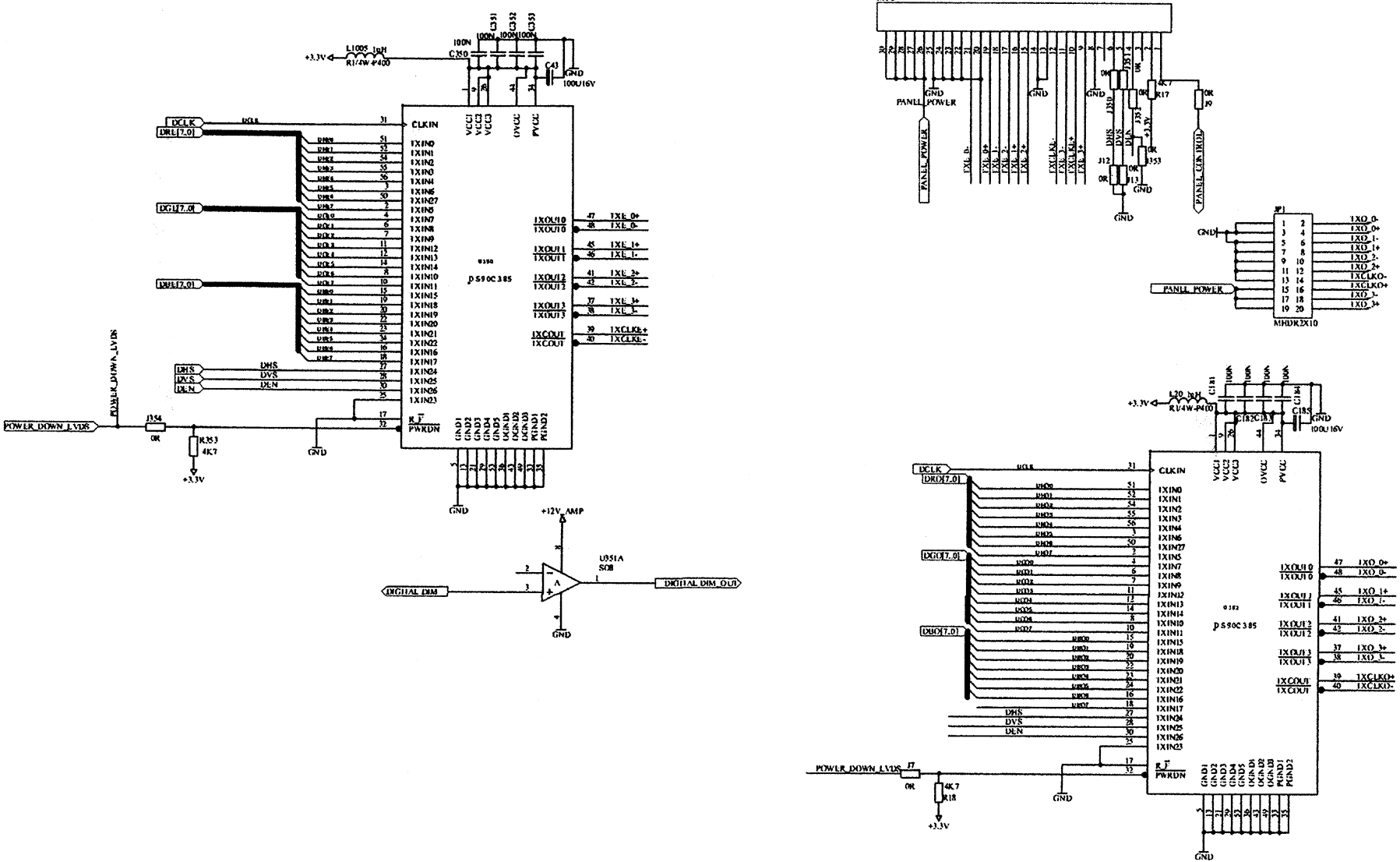

S350
PANEL_POWER
PANEL_CONTROL
JP1
MHDR2X10
DCLK
DRE[7.0]
DGE[7.0]
DBE[7.0]
DHS
DVS
DEN
POWER_DOWN_LVDS
J354
R353
4K7
+3.3V
GND
CLKIN
PS90C385
PWRDN
+12V_AMP
U351A
S08
DIGITAL_DIM
DIGITAL_DIM_OUT
L1005
R1/4W-P400
C350
C43
100U16V
L20
R1/4W-P400
C185
100U16V
DRO[7.0]
DGO[7.0]
DBO[7.0]
R18

MICROPROCESSOR

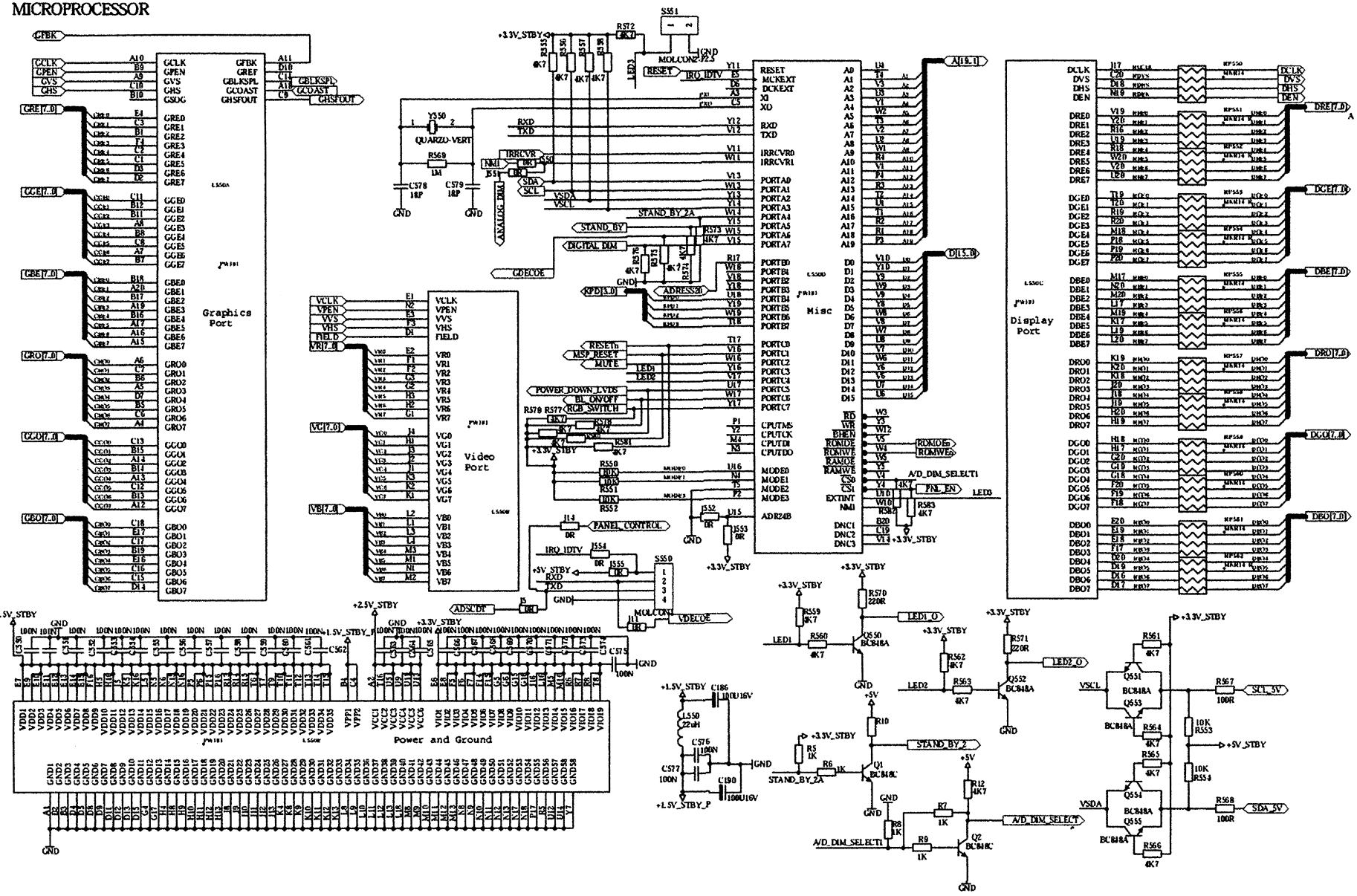

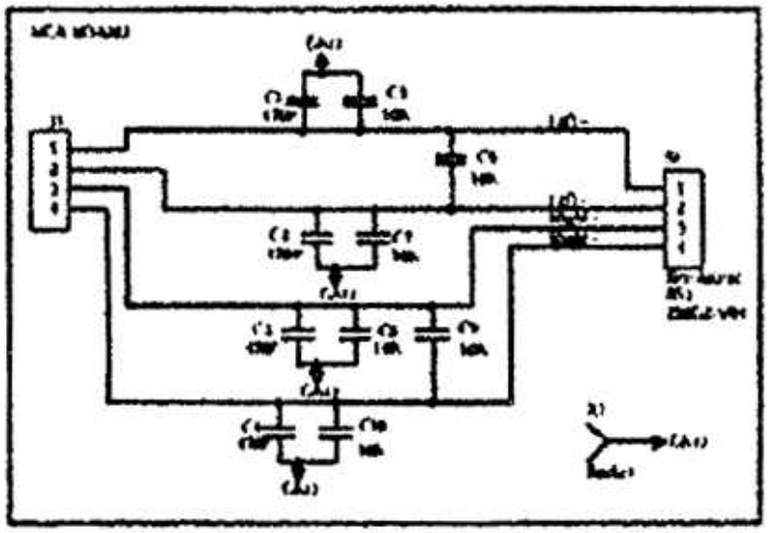

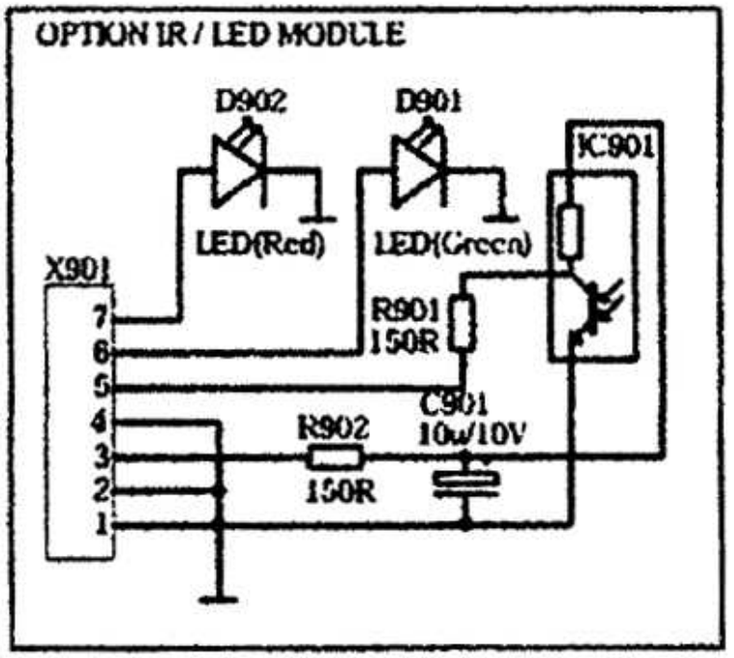

KEYBOARD MODULE

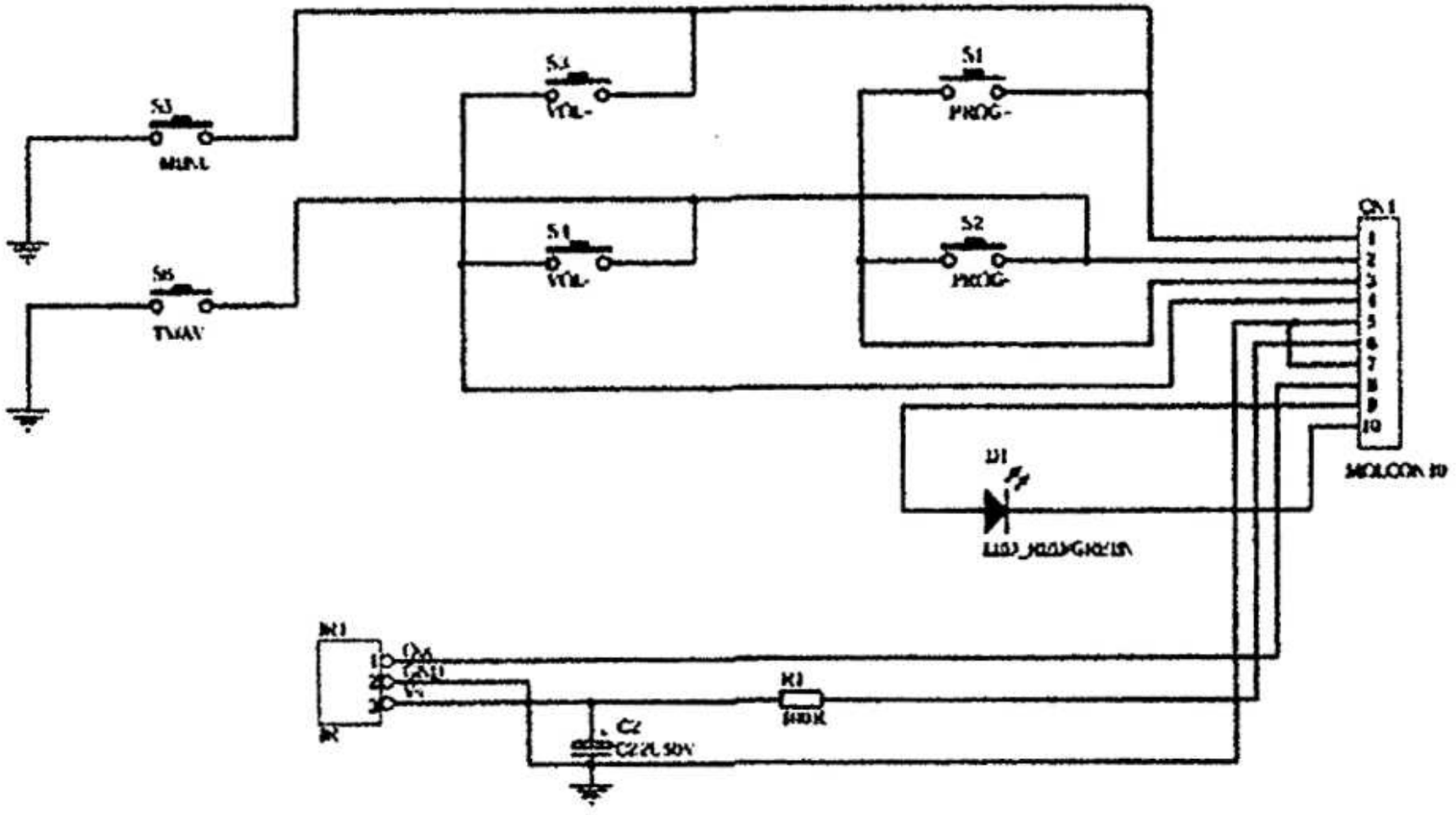

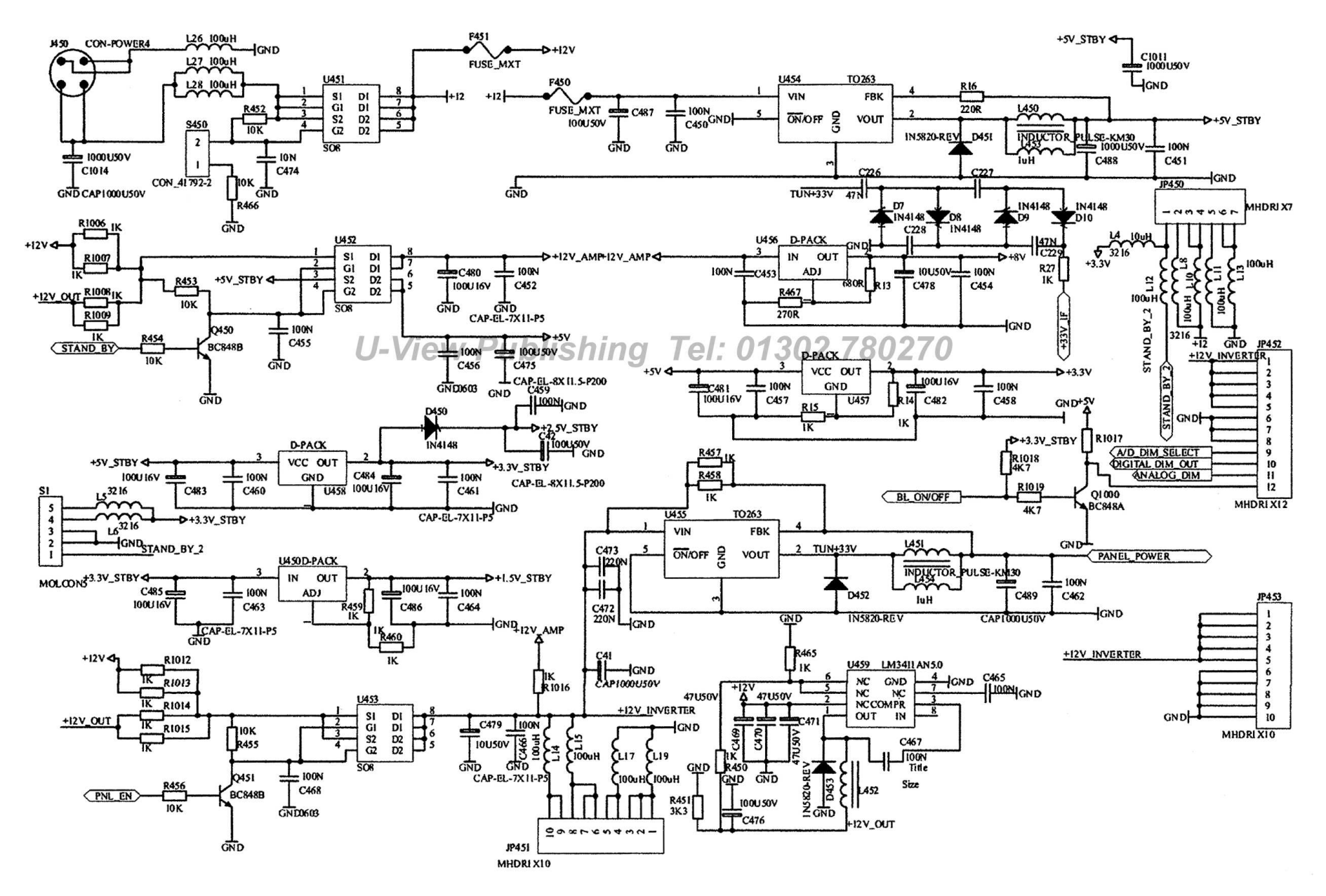

U-View Publishing Tel: 01302 780270

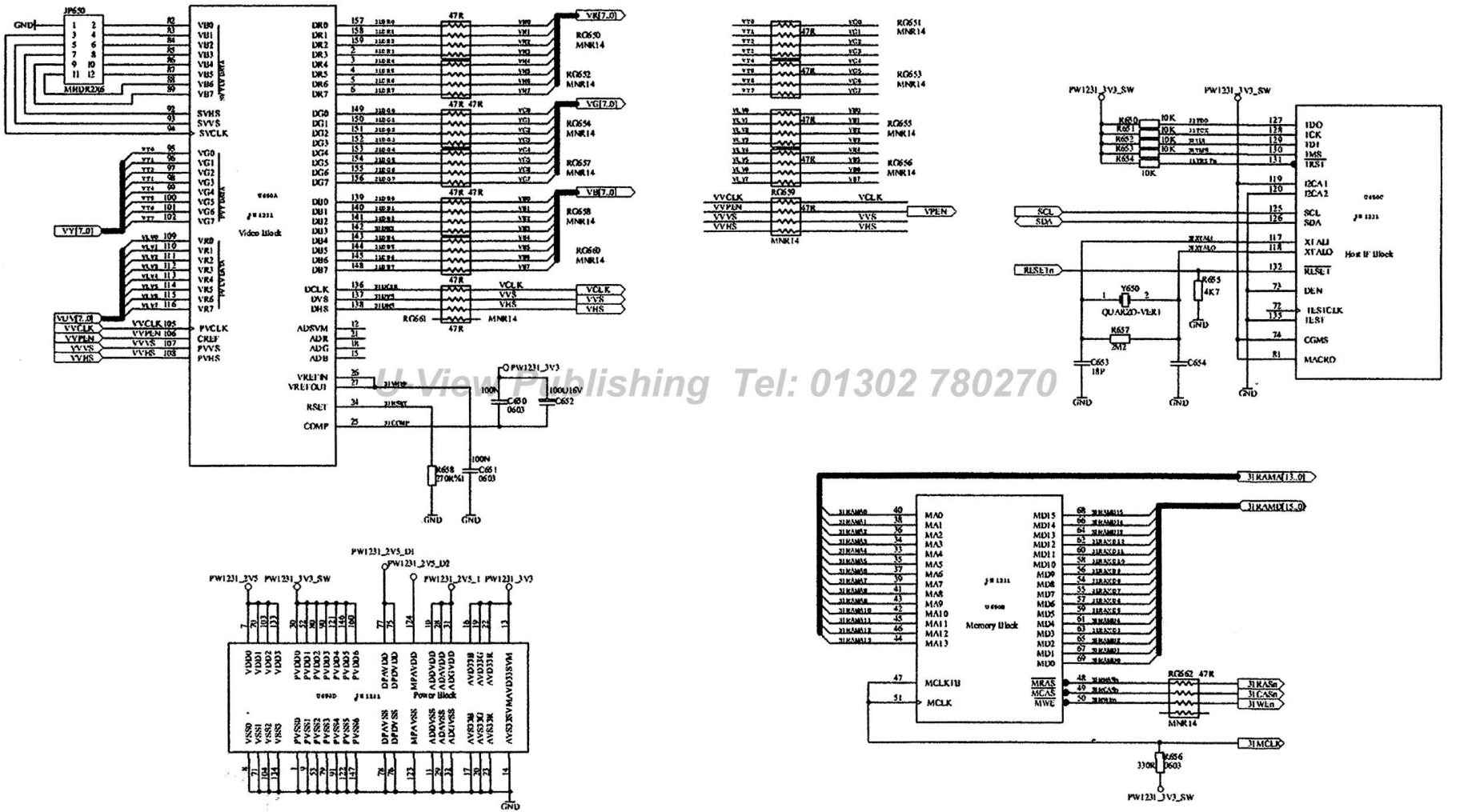

UView Publishing Tel: 01302 780270

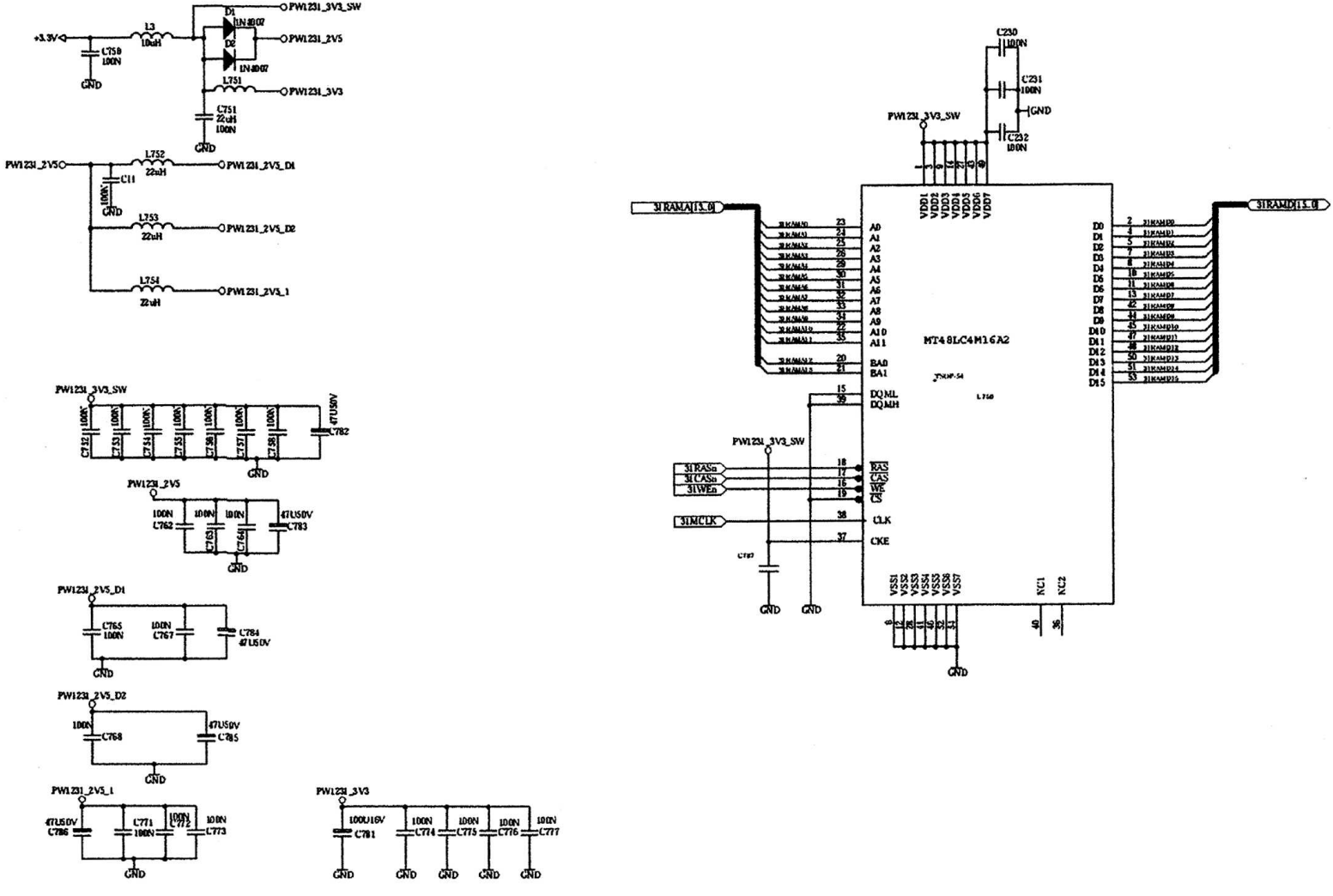
+3.3V
L3
10uH
C750
100N
GND
D1
1N4007
D2
1N4007
PW1231_3V3_SW
PW1231_2V5
L751
PW1231_3V3
C751
22uH
100N
GND
PW1231_2V5
L752
22uH
PW1231_2V5_D1
C11
100N
GND
L753
22uH
PW1231_2V5_D2
L754
22uH
PW1231_2V5_1
PW1231_3V3_SW
C752
100N
C753
100N
C754
100N
C755
100N
C758
100N
C757
100N
C758
100N
47U50V
C782
GND
PW1231_2V5
100N
C762
100N
C763
100N
C764
47U50V
C783
GND
PW1231_2V5_D1
C765
100N
100N
C767
C784
47U50V
GND
PW1231_2V5_D2
100N
C768
47U50V
C785
GND
PW1231_2V5_1
47U50V
C786
C771
100N
100N
C772
100N
C773
GND
PW1231_3V3
100U16V
C781
100N
C774
100N
C775
100N
C776
100N
C777
GND
GND
GND
GND
GND
C230
100N
C231
100N
GND
C232
100N
PW1231_3V3_SW
VDD1
VDD2
VDD3
VDD4
VDD5
VDD6
VDD7
31RAMA[15..0]
A0
A1
A2
A3
A4
A5
A6
A7
A8
A9
A10
A11
BA0
BA1
MT48LC4M16A2
DQML
DQMH
CLK
CKE
RAS
CAS
WE
CS
D0
D1
D2
D3
D4
D5
D6
D7
D8
D9
D10
D11
D12
D13
D14
D15
31RAMD[15..0]
31RASn
31CASn
31WEn
31MCLK
PW1231_3V3_SW
GND
GND
VSS1
VSS2
VSS3
VSS4
VSS5
VSS6
VSS7
NC1
NC2
GND

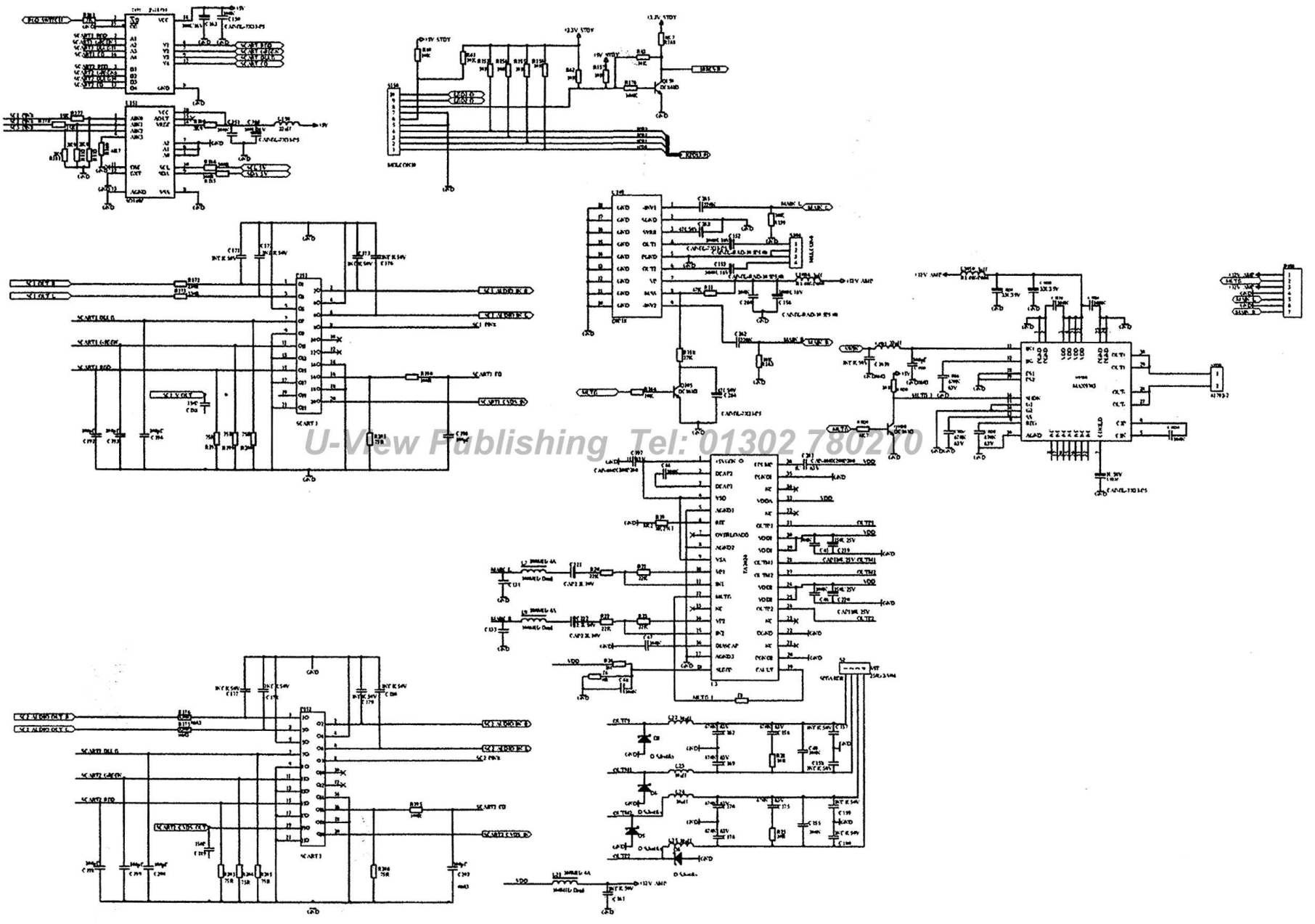
U-View Publishing Tel: 01302 780210

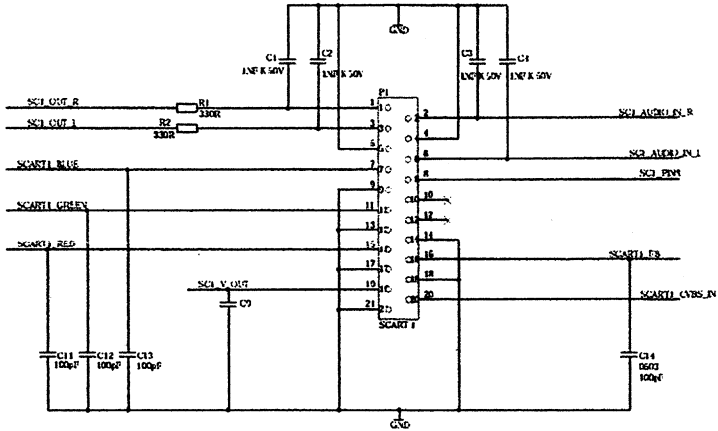
GND
C1
1NF/K 50V
C2
1NF/K 50V
C3
1NF/K 50V
C4
1NF/K 50V
SCI_OUT_R
SCI_OUT_L
R1
330R
R2
330R
P1
SCI_AUDIO_IN_R
SCI_AUDIO_IN_L
SCI_PIN8
SCART1_BLUE
SCART1_GREEN
SCART1_RED
SCART1_FB
SCI_V_OUT
SCART1_CVBS_IN
C9
C11
100pF
C12
100pF
C13
100pF
C14
0603
100nF
SCART 1
GND

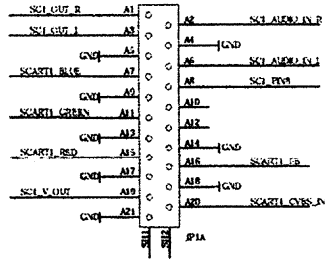
SCI_OUT_R
SCI_OUT_L
GND
SCART1_BLUE
GND
SCART1_GREEN
GND
SCART1_RED
GND
SCI_V_OUT
GND
SCI_AUDIO_IN_R
GND
SCI_AUDIO_IN_L
SCI_PIN8
SCART1_FB
GND
SCART1_CVBS_IN
JP1A

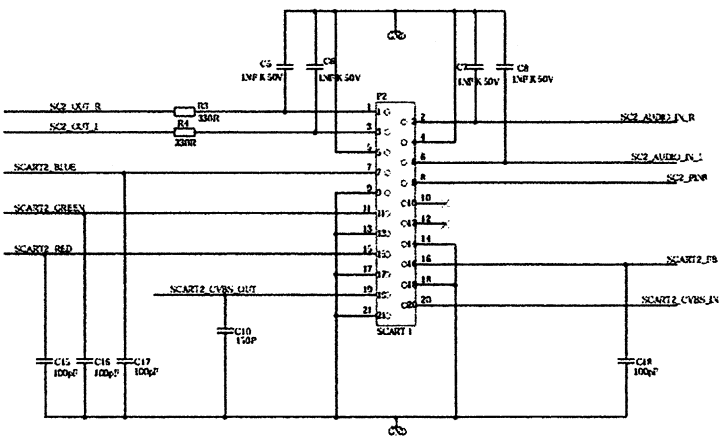
GND
C5
1NF/K 50V
C6
1NF/K 50V
C7
1NF/K 50V
C8
1NF/K 50V
SCI_OUT_R
SCI_OUT_L
R3
330R
R4
330R
P2
SCI_AUDIO_IN_R
SCI_AUDIO_IN_L
SCI_PIN8
SCART2_BLUE
SCART2_GREEN
SCART2_RED
SCART2_FB
SCART2_CVBS_OUT
SCART2_CVBS_IN
C10
150P
C15
100pF
C16
100pF
C17
100pF
C18
100pF
SCART 1
GND

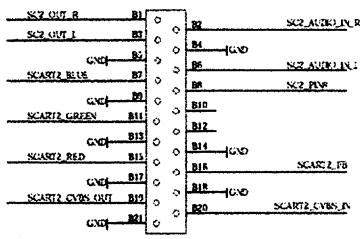
SCI_OUT_R
SCI_OUT_L
GND
SCART2_BLUE
GND
SCART2_GREEN
GND
SCART2_RED
GND
SCART2_CVBS_OUT
GND
SCI_AUDIO_IN_R
GND
SCI_AUDIO_IN_L
SCI_PIN8
SCART2_FB
GND
SCART2_CVBS_IN
JP1B

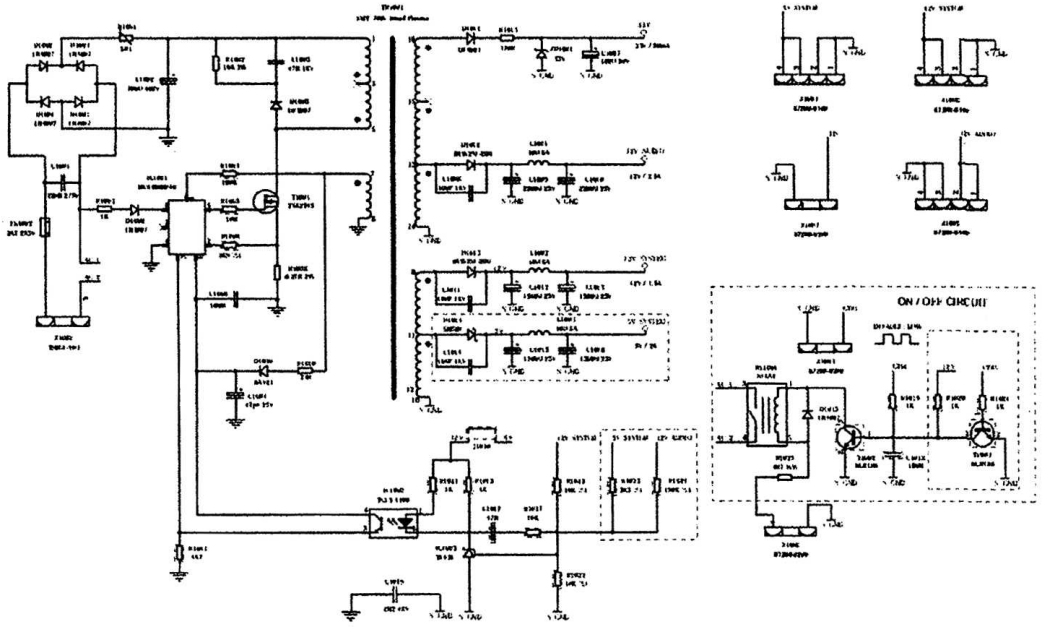
ON / OFF CIRCUIT

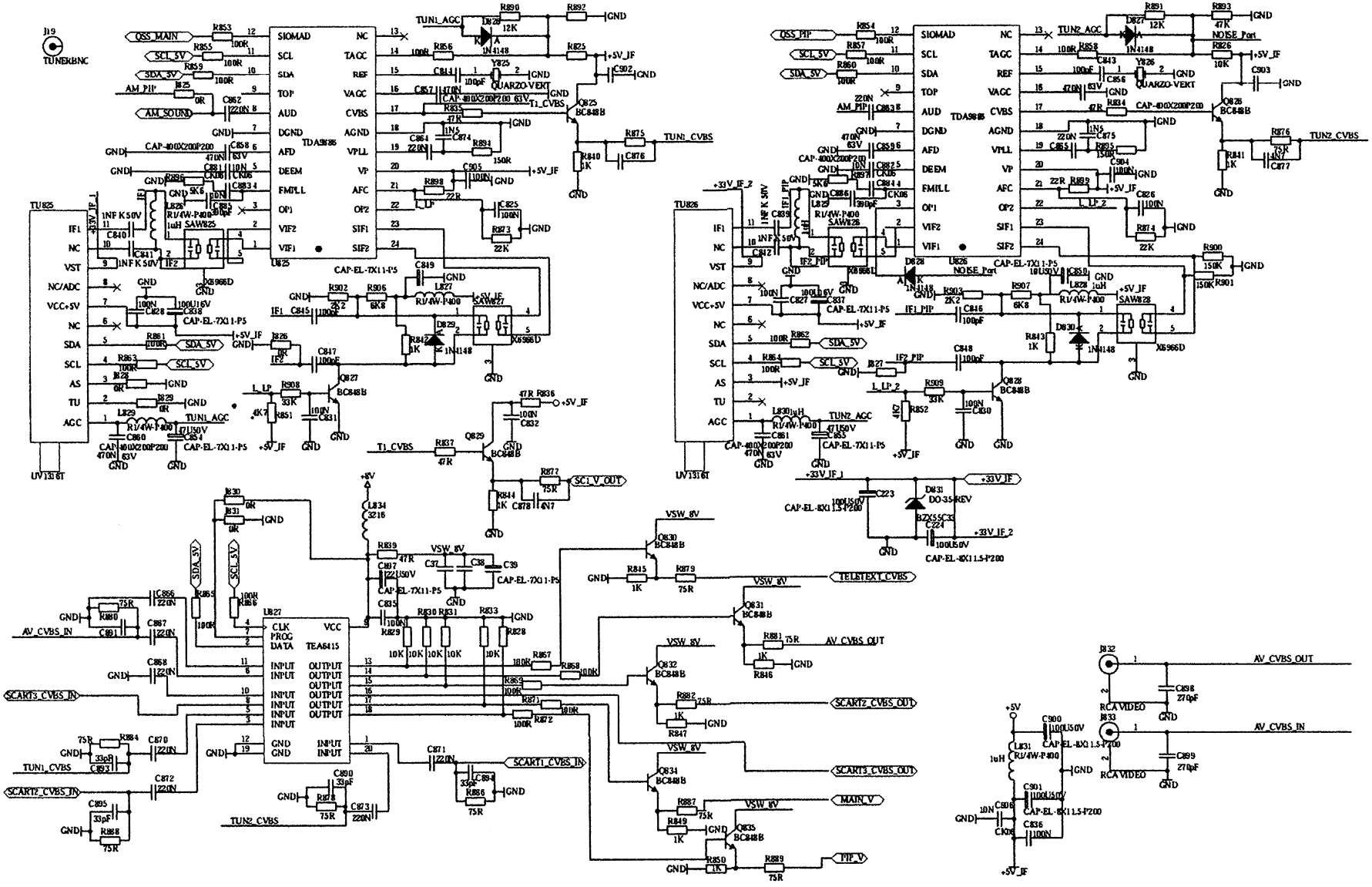

J19
TUNERBNC
QSS_MAIN
SCL_5V
SDA_5V
AM_PIP
AM_SOUND
TDA9886
U825
TU825
UV1316T
TUN1_AGC
TUN1_CVBS
TUN2_AGC
TUN2_CVBS
QUARZO-VERT
NOISE_Port
TU826
U826
U827
TEA6415
AV_CVBS_IN
SCART3_CVBS_IN
SCART2_CVBS_IN
SCART1_CVBS_IN
TUN2_CVBS
TELETEXT_CVBS
AV_CVBS_OUT
SCART2_CVBS_OUT
SCART3_CVBS_OUT
MAIN_V
PIP_V
J832
J833
RCA VIDEO

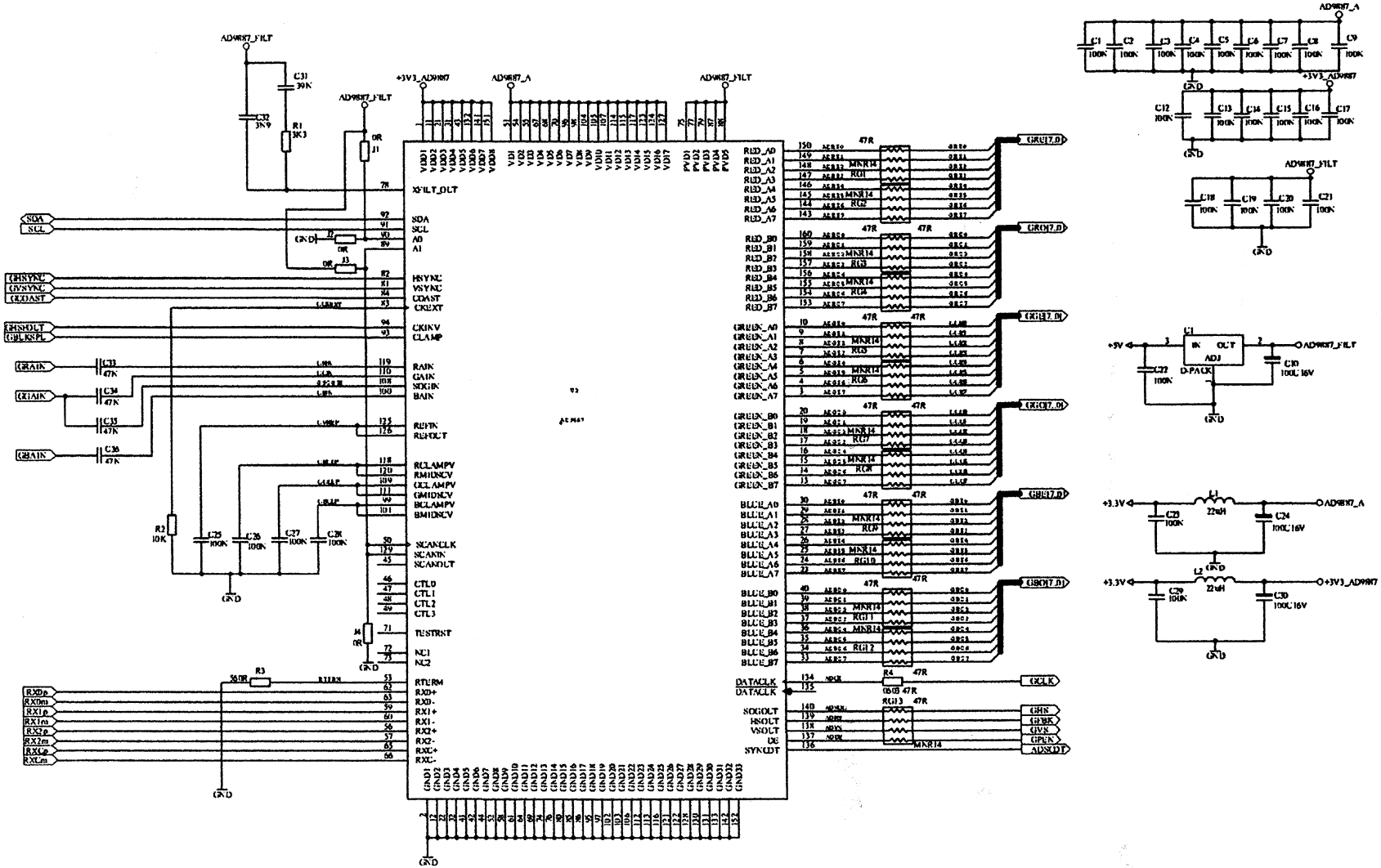
AD9887_FILT
+3V3_AD9887
AD9887_A
C31 39K
C32 3N9
R1 3K3
0R J1
XFILT_OUT
SDA
SCL
HSYNC
VSYNC
CDAST
CKEXT
CKINV
CLAMP
RAIN
GAIN
SOGIN
BAIN
REFIN
REFOUT
RCLAMPV
RMIDSCV
GCLAMPV
GMIDSCV
BCLAMPV
BMIDSCV
SCANCLK
SCANIN
SCANOUT
CTL0
CTL1
CTL2
CTL3
TESTRST
NC1
NC2
RTERM
RXO+
RXO-
RXI+
RXI-
RX2+
RX2-
RXC+
RXC-
RED_A0
RED_A1
RED_A2
RED_A3
RED_A4
RED_A5
RED_A6
RED_A7
RED_B0
RED_B1
RED_B2
RED_B3
RED_B4
RED_B5
RED_B6
RED_B7
GREEN_A0
GREEN_A1
GREEN_A2
GREEN_A3
GREEN_A4
GREEN_A5
GREEN_A6
GREEN_A7
GREEN_B0
GREEN_B1
GREEN_B2
GREEN_B3
GREEN_B4
GREEN_B5
GREEN_B6
GREEN_B7
BLUE_A0
BLUE_A1
BLUE_A2
BLUE_A3
BLUE_A4
BLUE_A5
BLUE_A6
BLUE_A7
BLUE_B0
BLUE_B1
BLUE_B2
BLUE_B3
BLUE_B4
BLUE_B5
BLUE_B6
BLUE_B7
DATACLK
SOGOUT
HSOUT
VSOUT
DE
SYNCOUT
GND
C1 100N
C2 100N
C3 100N
C4 100N
C5 100N
C6 100N
C7 100N
C8 100N
C9 100N
C12 100N
C13 100N
C14 100N
C15 100N
C16 100N
C17 100N
C18 100N
C19 100N
C20 100N
C21 100N
U1
IN
OUT
ADJ
D-PACK
C22 100N
C10 100U 16V
5V
L1 22uH
L2 22uH
C23 100N
C24 100U16V
C29 100N
C30 100U16V

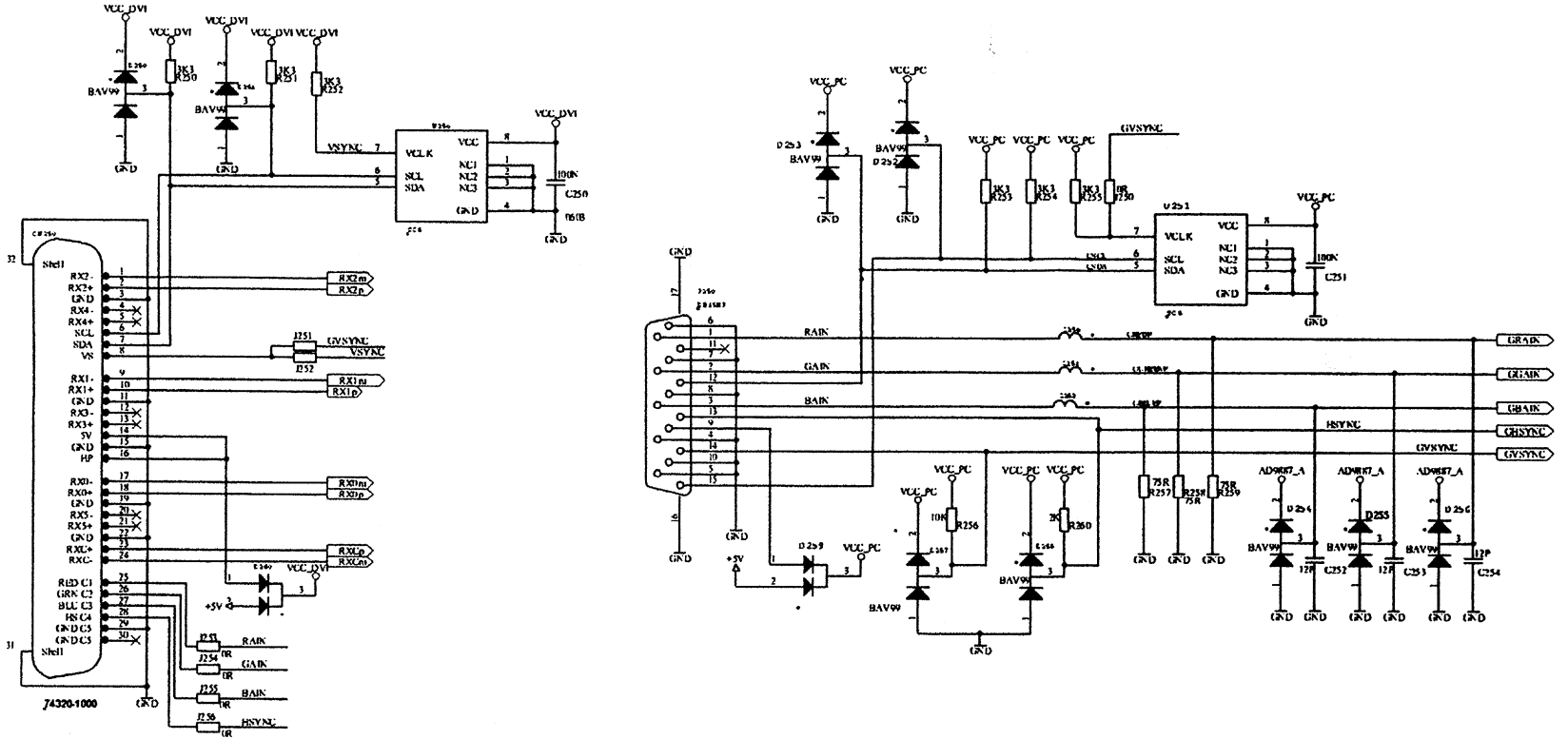

VCC_DVI
BAV99
GND
VSYNC
VCLK
SCL
SDA
VCC
NC1
NC2
NC3
100N
C250
Shell
RX2-
RX2+
RX4-
RX4+
VS
RX1-
RX1+
RX3-
RX3+
5V
HP
RX0-
RX0+
RX5-
RX5+
RXC+
RXC-
RED C1
GRN C2
BLU C3
HS C4
GND C5
GVSYNC
RX2m
RX2p
RX1m
RX1p
RX0m
RX0p
RXCp
RXCm
+5V
RAIN
GAIN
BAIN
HSYNC
74320-1000
VCC_PC
GVSYNC
RAIN
GAIN
BAIN
HSYNC
GRAIN
GGAIN
GBAIN
GHSYNC
GVSYNC
AD9887_A

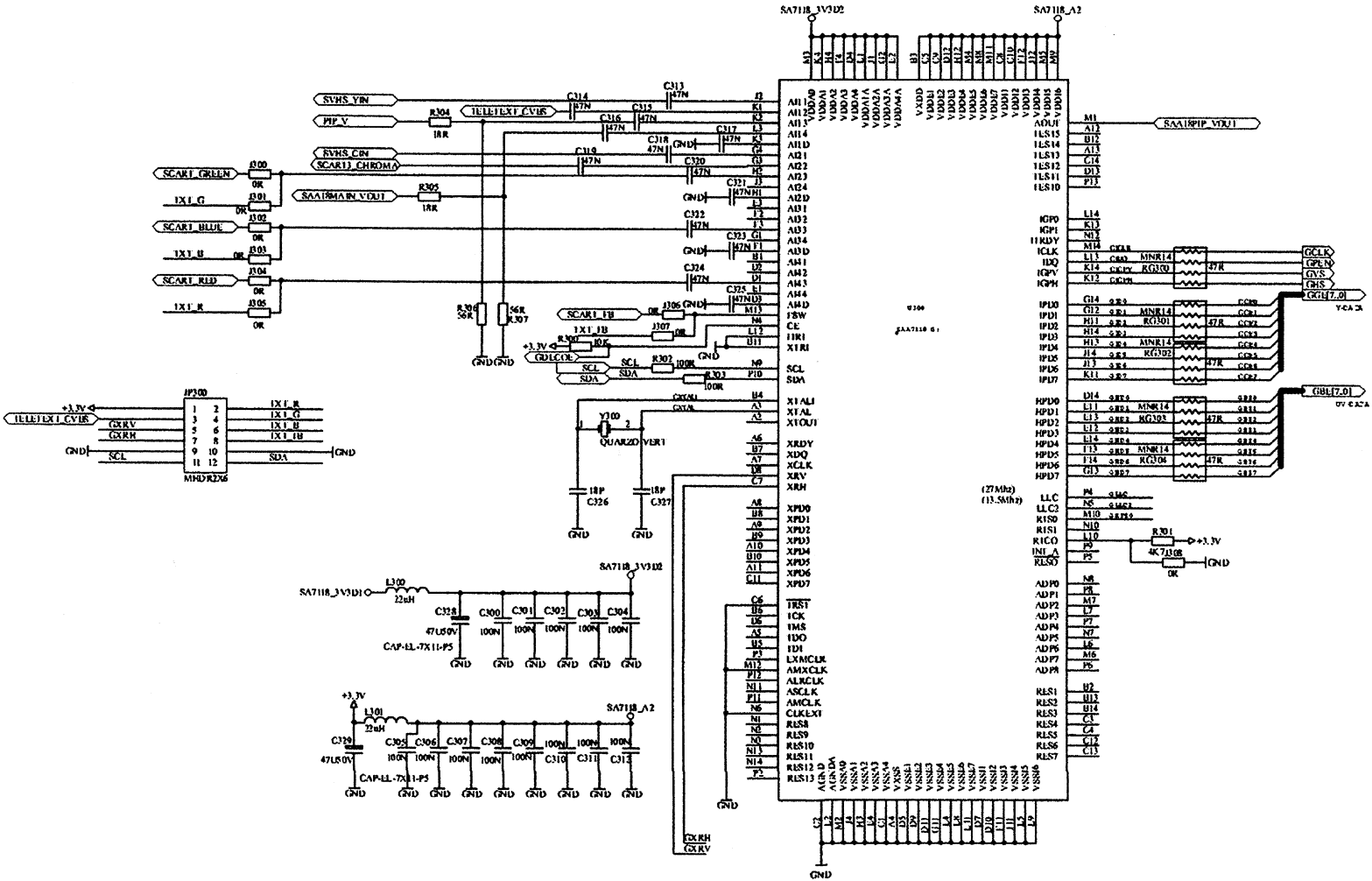
SA7118_3V3D2
SA7118_A2
SVHS_YIN
PIP_V
TELETEXT_CVBS
SVHS_CIN
SCART3_CHROMA
SCART_GREEN
SAA18MAIN_VOUT
SCART_BLUE
SCART_RED
SCART_FB
GDLCOL
SAA18PIP_VOUT
GCLK
GPEN
GVS
GHS
GGE[7..0]
GBE[7..0]
JP300
MHDR2X6
Y300
QUARZOVERT
(27Mhz)
(13.5Mhz)
L300
22uH
L301
22uH
CAP-EL-7X11-P5
GND

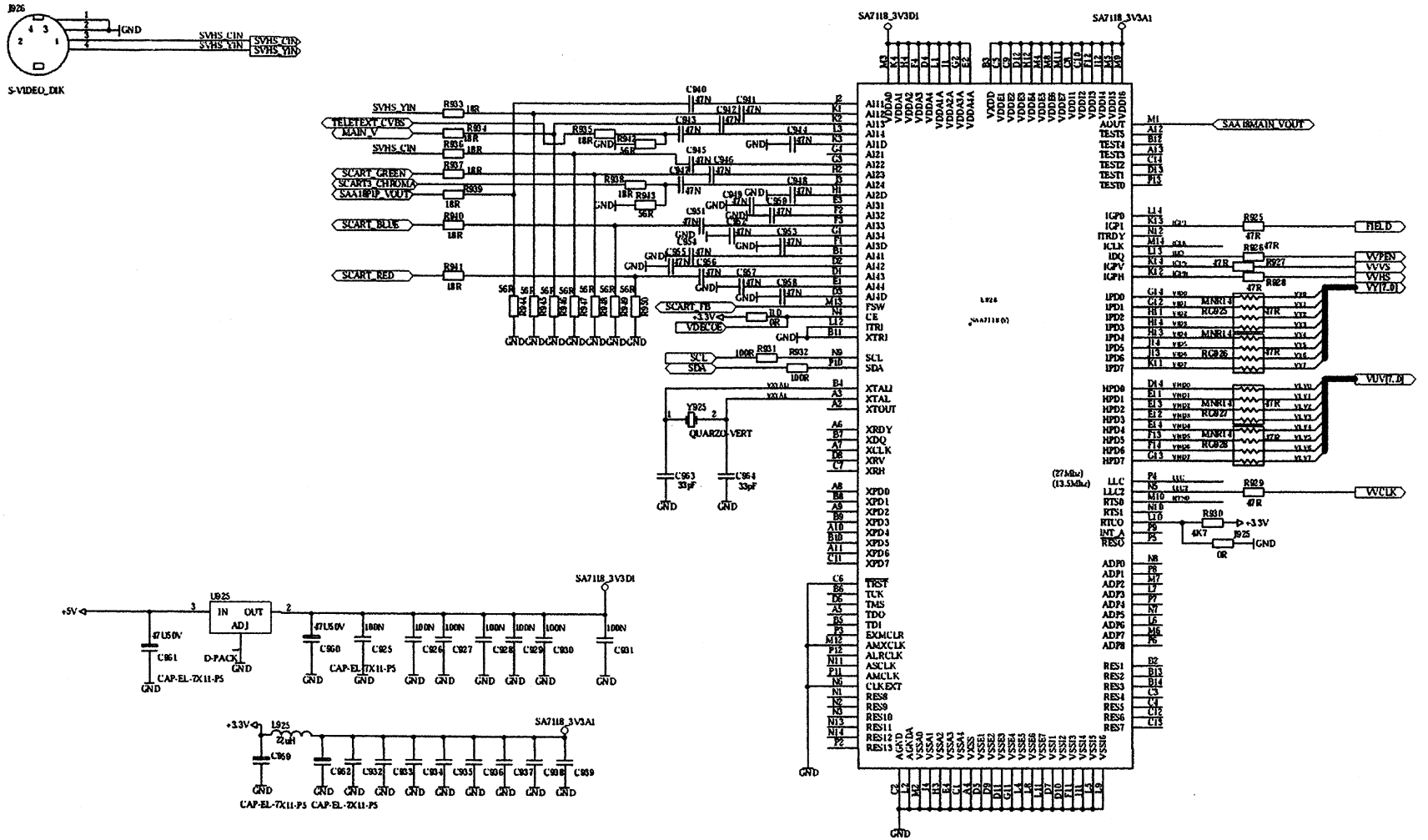
J926
S-VIDEO_DIK
SVHS_CIN
SVHS_YIN
TELETEXT_CVBS
MAIN_V
SCART_GREEN
SCART3_CHROMA
SAA18PIP_VOUT
SCART_BLUE
SCART_RED
SCART_FB
VDECOE
SCL
SDA
Y925
QUARZO-VERT
C963
33pF
C964
33pF
SA7118_3V3D1
SA7118_3V3A1
SAA18MAIN_VOUT
FIELD
VVPEN
VVVS
VVHS
VY[7..0]
VUV[7..0]
VVCLK
(27Mhz)
(13.5Mhz)
U925
IN
OUT
ADJ
D-PACK
+5V
+3.3V
L925
22uH
CAP-EL-7X11-P5
GND