SPECIFICATION
FOR
APPROVAL

(•) **Preliminary Specification**
( ) **Final Specification**

Title	26.0” WXGA TFT LCD

BUYER	Sanyo
MODEL	

SUPPLIER	LG.Philips LCD Co., Ltd.
*MODEL	LC260W01
SUFFIX	A5K1

*When you obtain standard approval,
please use the above model name without suffix

APPROVED BY	SIGNATURE DATE
/	
/	
/	

Please return 1 copy for your confirmation with your signature and comments.

APPROVED BY	SIGNATURE DATE
M.H Park / G. Manager	
REVIEWED BY	
J.T Kim / S. Manager	
PREPARED BY	
J.H.Yoon / Engineer	

TV Products Engineering Dept.
LG. Philips LCD Co., Ltd

Contents

No	ITEM	Page
	COVER	1
	CONTENTS	2
	RECORD OF REVISIONS	3
1	GENERAL DESCRIPTION	4
2	ABSOLUTE MAXIMUM RATINGS	5
3	ELECTRICAL SPECIFICATIONS	6
3-1	ELECTRICAL CHARACTREISTICS	6
3-2	INTERFACE CONNECTIONS	8
3-3	SIGNAL TIMING SPECIFICATIONS	12
3-4	SIGNAL TIMING WAVEFORMS	13
3-5	COLOR INPUT DATA REFERNECE	14
3-6	POWER SEQUENCE	15
4	OPTICAL SFECIFICATIONS	16
5	MECHANICAL CHARACTERISTICS	20
6	RELIABLITY	23
7	INTERNATIONAL STANDARDS	24
7-1	SAFETY	
7-2	EMC	
8	PACKING	25
8-1	DESIGNATION OF LOT MARK	
8-2	PACKING FORM	
9	PRECAUTIONS	26

RECORD OF REVISIONS

Revision No	Revision Date	Page	DESCRIPTION
0.0	Dec.10. 2003	-	Preliminary Specification

1. General Description

The LC260W01 is a Color Active Matrix Liquid Crystal Display with an integral Cold Cathode Fluorescent Lamp(CCFL) backlight system. The matrix employs a-Si Thin Film Transistor as the active element. It is a transmissive type display operating in the normally black mode. This TFT-LCD has a 26.0 inch diagonally measured active display area with WXGA resolution (768 vertical by 1280 horizontal pixel array). Each pixel is divided into Red, Green and Blue sub-pixels or dots which are arranged in vertical stripes. Gray scale or the brightness of the sub-pixel color is determined with a 8-bit gray scale signal for each dot, thus, presenting a palette of more than 16.7M(true) colors with 8Bit.
The LC260W01 has been designed to apply the 8Bit LVDS interface.
It is intended to support LCD TV, PCTV where high brightness, wide viewing angle, high color saturation, and high color are important.

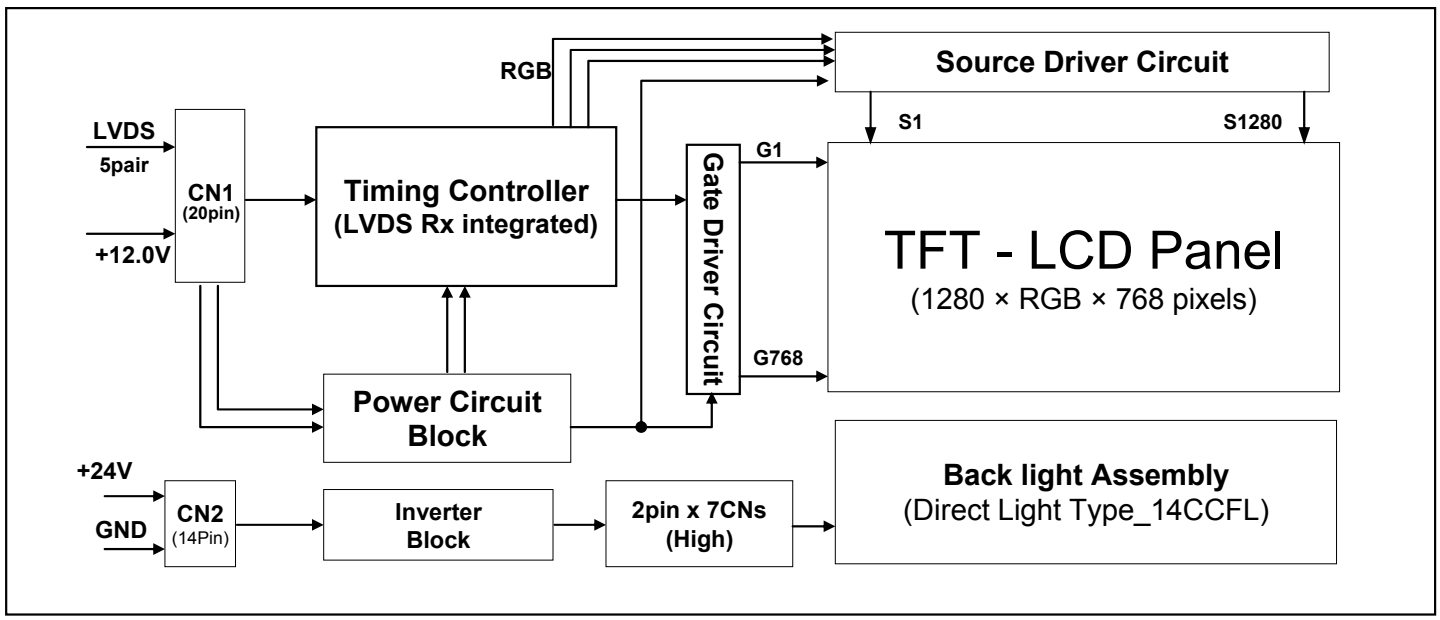

General Features

Active Screen Size	26.0 inches(660.40mm) diagonal
Outline Dimension	622.0(H) x 389.0(V) x 53.0(D) mm(Typ.)
Pixel Pitch	0.1475mm x 0.4425mm x RGB
Pixel Format	1280 horiz. By 768 vert. Pixels RGB strip arrangement
Color Depth	16.7M colors
Luminance, White	450 cd/m^2 (Center 1 points typ.)
Viewing Angle(CR>10)	View Angle Free (R/L 176(Typ.), U/D 176(Typ.))
Power Consumption	Total TBD Watt (Typ.) [LCM 4.14W / Inverter TBD W]
Weight	TBD g (Typ.)
Display Operating Mode	Transmissive mode, Normally Black
Surface Treatment	Hard coating(3H), Anti-glare treatment of the front polarizer,

2. Absolute Maximum Ratings

The following are maximum values which, if exceeded, may cause faulty operation or damage to the unit.

Table 1. ABSOLUTE MAXIMUM RATINGS

Parameter	Symbol	Values		Units	Notes
		Min	Max		
Power Input Voltage	V_{LCD}	-0.3	+14.0	Vdc	at 25 ± 5°C
Operating Temperature	TOP	0	+50	°C	1
Storage Temperature	TST	-20	+60	°C	
Operating Ambient Humidity	HOP	10	90	%RH	
Storage Humidity	HST	10	90	%RH	

Notes : 1. Temperature and relative humidity range are shown in the figure below.
Wet bulb temperature should be 39 °C Max, and no condensation of water.

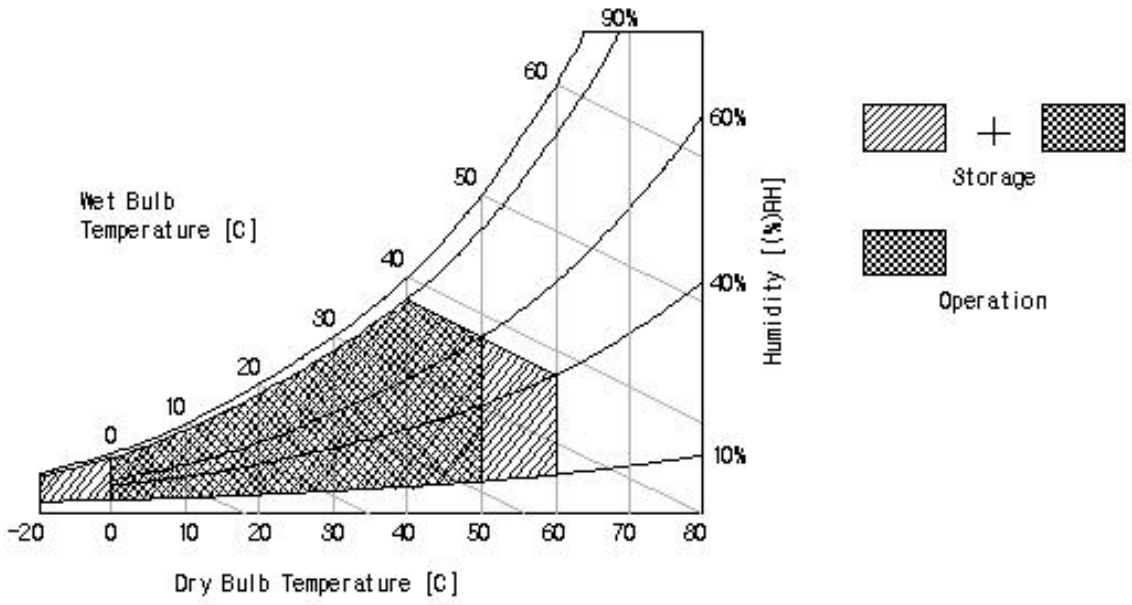

3. Electrical Specifications

3-1. Electrical Characteristics

The LC260W01 requires two power inputs. One is employed to power the LCD electronics and to drive the TFT array and liquid crystal. The second input power for the CCFL/Backlight, is to power the inverter.

Table 2_1. LCD PANEL ELECTRICAL CHARACTERISTICS

Parameter	Symbol	Values			Unit	Notes
		Min	Typ	Max		
Module :						
Power Supply Input Voltage	V_{LCD}	11.4	12.0	12.6	Vdc	
Power Supply Input Current	I_{LCD}	-	345	400	mA	1
		-	400	520	mA	2
Power Consumption	P_{LCD}	-	4.14	4.8	Watt	1
Rush current	I_{RUSH}	-	-	3.0	A	3

Notes: 1. The specified current and power consumption are under the V_{LCD}=12.0V, 25°C,f_V=60Hz condition whereas mosaic pattern(8 x 6) is displayed and f_V is the frame frequency.
2. The current is specified at the maximum current pattern.
3. The duration of rush current is about 2ms and rising time of Power Input is 1ms(min).

White : 255 Gray
Black : 0 Gray

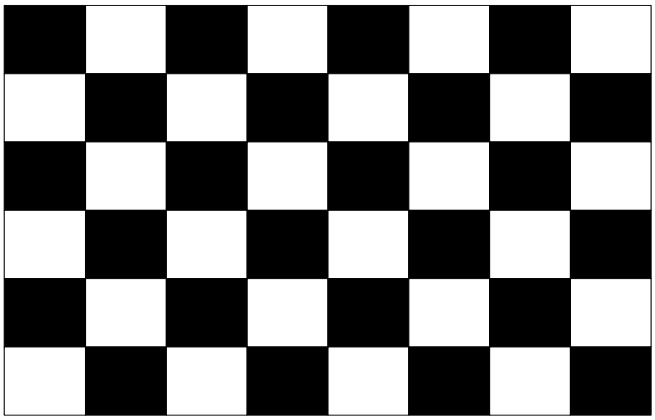

Table 2_2. INVERTER ELECTRICAL CHARACTERISTICS

Parameter	Symbol	Condition	Values			Unit	Notes
			Min.	Typ.	Max.		
Inverter :							
Input Voltage	V_{DDB}		22.8	24.0	25.2	V	1
Input Current	I_{DDB}	VBR(max) = 3.3V	TBD	TBD	TBD	A	1
		VBR(min) = 0V	TBD	TBD	TBD	A	
Input Power	P_B		TBD	TBD	TBD	Watt	
B/L on/off control	$V_{ON/OFF}$	Lamp ON = High	2.0		3.3	V	
		Lamp OFF =Low	0.0		1.0	V	
Brightness Adj	V_{BR}		0		3.3	V	
Lamp :							
Life Time			50,000			Hrs	2

Notes : 1. The specified current and power consumption are under the typical supply Input voltage, 16.5V.
2. The life is determined as the time at which luminance of the lamp is 50% compared to that of initial value at the typical lamp current on condition of continuous operating at 25 ± 2°C.
3. Electrical characteristics are determined after the unit has been 'ON' and stable for approximately 2Hrs in a dark environment at 25 °C± 2°C.

3-2. Interface Connections

This LCD employs Two interface connections, a 20 pin connector is used for the module electronics and a 14Pin Connector is used for the integral backlight system.

3-2-1. LCD Module

- LCD Connector : DF14H-20P-1.25H(Manufactured by Hirose) or Equivalent
- Mating connector : DF14-20S-1.25C(Manufactured by Hirose) or Equivalent

Table 3. MODULE CONNECTOR PIN CONFIGURATION

Pin No	Symbol	Description	Output Pin # (LVDS Tx)
1	V_{LCD}	Power Supply +12.0V	
2	V_{LCD}	Power Supply +12.0V	
3	GND	Power Ground.	
4	GND	Power Ground	
5	RA-	LVDS Receiver Signal(-)	PIN#48
6	RA+	LVDS Receiver Signal(+)	PIN#47
7	GND	Ground	
8	RB-	LVDS Receiver Signal(-)	PIN#46
9	RB+	LVDS Receiver Signal(+)	PIN#45
10	GND	Ground	
11	RC-	LVDS Receiver Signal(-)	PIN#42
12	RC+	LVDS Receiver Signal(+)	PIN#41
13	GND	Ground	
14	RCLK-	LVDS Receiver Clock Signal(-)	PIN#40
15	RCLK+	LVDS Receiver Clock Signal(+)	PIN#39
16	GND	Ground	
17	RD-	LVDS Receiver Signal(-)	PIN#38
18	RD+	LVDS Receiver Signal(+)	PIN#37
19	GND	Ground	
20	GND	Ground	

Notes : 1. The 20nd pin should be ground.
2. All GND(ground) pins should be connected together and to Vss which should also be connected to the LCD's metal frame.
3. All V_{LCD} (power input) pins should be connected together.
4. Input Level of LVDS signal is based on the IEA 664 Standard.

Rear view of LCM

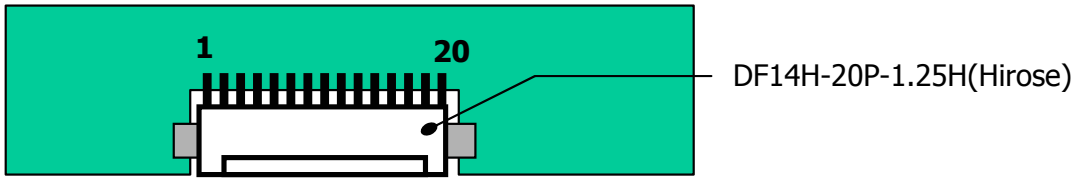

Table 4. REQUIRED SIGNAL ASSIGNMENT FOR FLATLINK'S Transmitter(THC63LVDM83A/LVDF83A)

Pin #	Pin Name	Symbol	Description	Output
51	TA0	Red0 [LSB]	Red Pixel Data	RA- RA+
52	TA1	Red1	Red Pixel Data	
54	TA2	Red2	Red Pixel Data	
55	TA3	Red3	Red Pixel Data	
56	TA4	Red4	Red Pixel Data	
2	TD1	Red7 [MSB]	Red Pixel Data	RD- RD+
3	TA5	Red5	Red Pixel Data	RA- RA+
4	TA6	Green0 [LSB]	Green Pixel Data	
6	TB0	Green1	Green Pixel Data	RB- RB+
7	TB1	Green2	Green Pixel Data	
8	TD2	Green6	Green Pixel Data	RD- RD+
10	TD3	Green7 [MSB]	Green Pixel Data	
11	TB2	Green3	Green Pixel Data	RB- RB+
12	TB3	Green4	Green Pixel Data	
14	TB4	Green5	Green Pixel Data	
15	TB5	Blue0 [LSB]	Blue Pixel Data	
16	TD4	Blue6	Blue Pixel Data	RD- RD+
18	TD5	Blue7 [MSB]	Blue Pixel Data	
19	TB6	Blue1	Blue Pixel Data	RB- RB+
20	TC0	Blue2	Blue Pixel Data	RC- RC+
22	TC1	Blue3	Blue Pixel Data	
23	TC2	Blue4	Blue Pixel Data	
24	TC3	Blue5	Blue Pixel Data	
25	TD6	RES		RD- RD+
27	TC4	Hsync.	No connection, If unnecessary	RC- RC+
28	TC5	Vsync.	No connection, If unnecessary	
30	TC6	EN	Data Enable	
50	TD0	Red6	Red Pixel Data	RD- RD+

Notes: 1. Refer to LVDS Transmitter Data Sheet for detail descriptions.
2. 7 means MSB and 0 means LSB at R,G,B pixel data.

Table 5. REQUIRED SIGNAL ASSIGNMENT FOR LVDS Transmitter (THC63LVDM83A / LVDF83A) Compatible : NS DS90C383/384

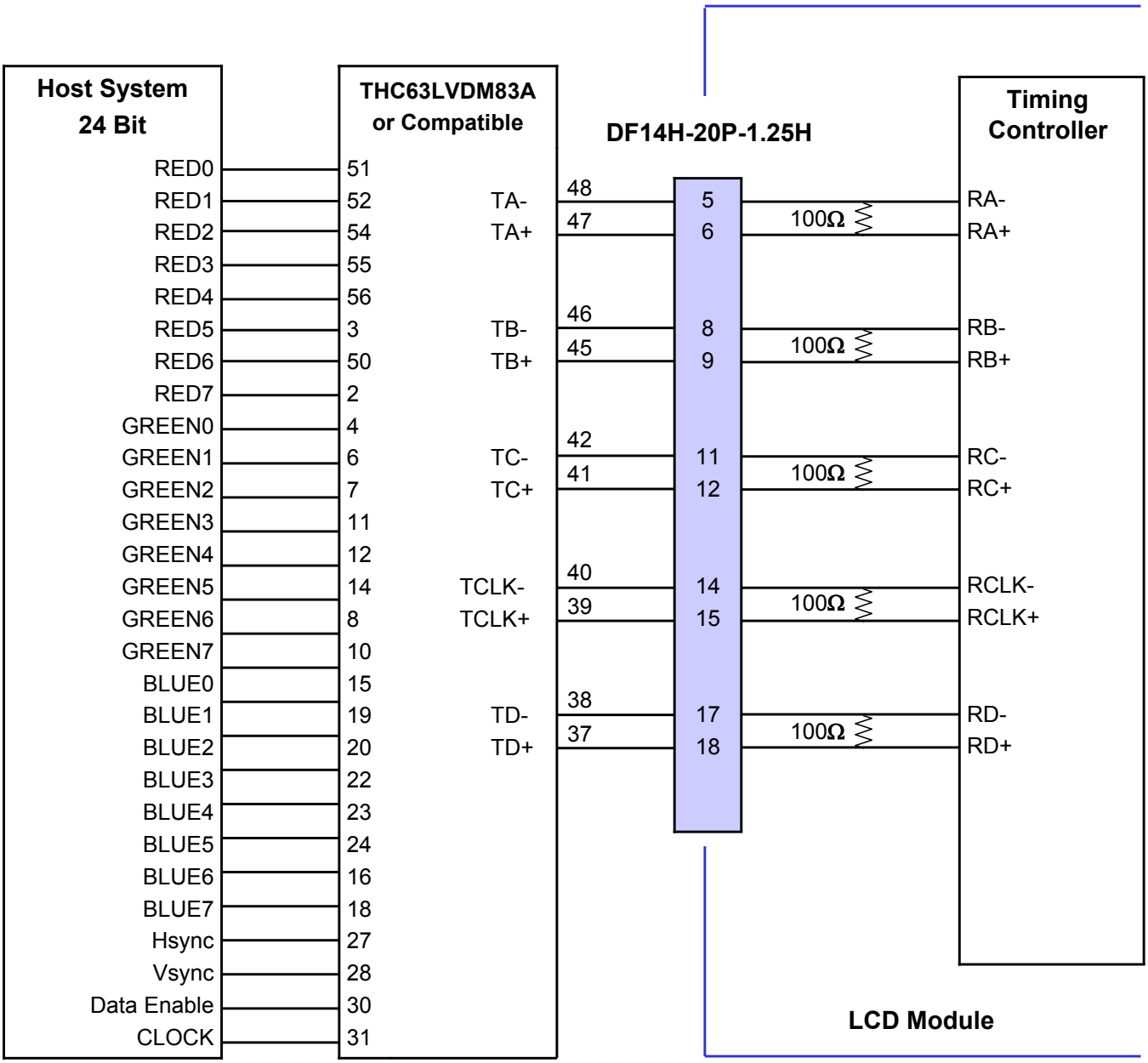

Notes : The LCD Module uses a 100Ohm resistor between positive and negative lines of each receiver input.

3-2-2. Backlight Inverter

- Inverter Connector : S14B-PH-SM3 Side entry type (Manufactured by JST) or Equivalent
- Mating Connector : PHR-14(Manufactured by JST) or Equivalent

Table 6. INVERTER CONNECTOR PIN CONFIGULATION

Pin No	Symbol	Description	Remarks
1	V_{BL}	Power Supply +24V	
2	V_{BL}	Power Supply +24V	
3	V_{BL}	Power Supply +24V	
4	V_{BL}	Power Supply +24V	
5	V_{BL}	Power Supply +24V	
6	GND	Backlight Ground	Note 1
7	GND	Backlight Ground	
8	GND	Backlight Ground	
9	GND	Backlight Ground	
10	GND	Backlight Ground	
11	Panel Detect	Not Define	
12	$V_{ON/OFF}$	Backlight On/off Signal	(On :2.0V~3.3V/Off :0.0~0.8V)
13	V_{BR}	Brightness Adjustable Voltage	(Max :3.3V / Min :0.0V)
14	GND	Signal Ground	

Notes : 1. GND is connected to the LCD's metal frame.

Rear view of LCM

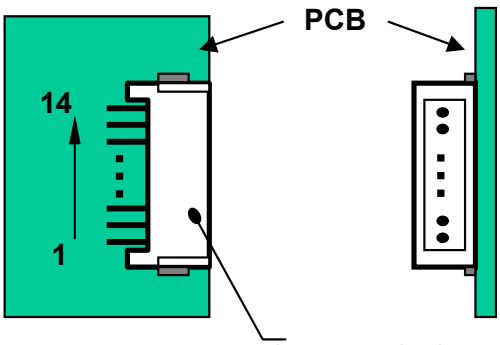

S14B-PH-SM3-TB
(JST : Japan Solderless Terminal Co.,Ltd.)

3-3. Signal Timing Specifications

This is the signal timing required at the input of the LVDS Transmitter. All of the interface signal timing should be satisfied with the following specifications for it's proper operation.

Table 7. TIMING TABLE

ITEM	Symbol		Min	Typ	Max	Unit	Note
DCLK	Period	tCLK	12.2	12.5	-	ns	
	Frequency	-	-	80	82	MHz	
Hsync	Period	tHP	1328	1648	-	tCLK	
	Frequency	fH	44.0	48.54	-	kHz	
	Width	tWH	8	16	-	tCLK	
Vsync	Period	tVP	775	810	-	tHP	Note 1) PAL : 47~53Hz NTSC: 57~63Hz
	Frequency	fV	47	60	63	Hz	
	Width	tWV	2	6	-	tHP	
DE (Data Enable)	Horizontal Valid	tHV	1280	1280	1280	tCLK	
	Horizontal Back Porch	tHBP	16	80	-		
	Horizontal Front Porch	tHFP	24	272	-		
	Horizontal Blank	-	48	368	-		
	Vertical Valid	tVV	768	768	768	tHP	
	Vertical Back Porch	tVBP	3	20	-		
	Vertical Front Porch	tVFP	2	16	-		
	Vertical Blank	-	7	42	-		

Notes : Hsync period and Hsync width-active should be even number times of tCLK. If the value is odd number times of tCLK, display control signal can be asynchronous. In order to operate this LCM a Hsync., Vsync and DE(data enable) signals should be used.

1. The performance of the electro-optical characteristics are may be influenced by variance of the vertical refresh rates.
2. Vsync, Hsync should be keep the above specification.
3. Hsync Period,Hsync Width, and Horizontal Back Porch should be any times of character number (8).

3-4. Signal Timing Waveforms

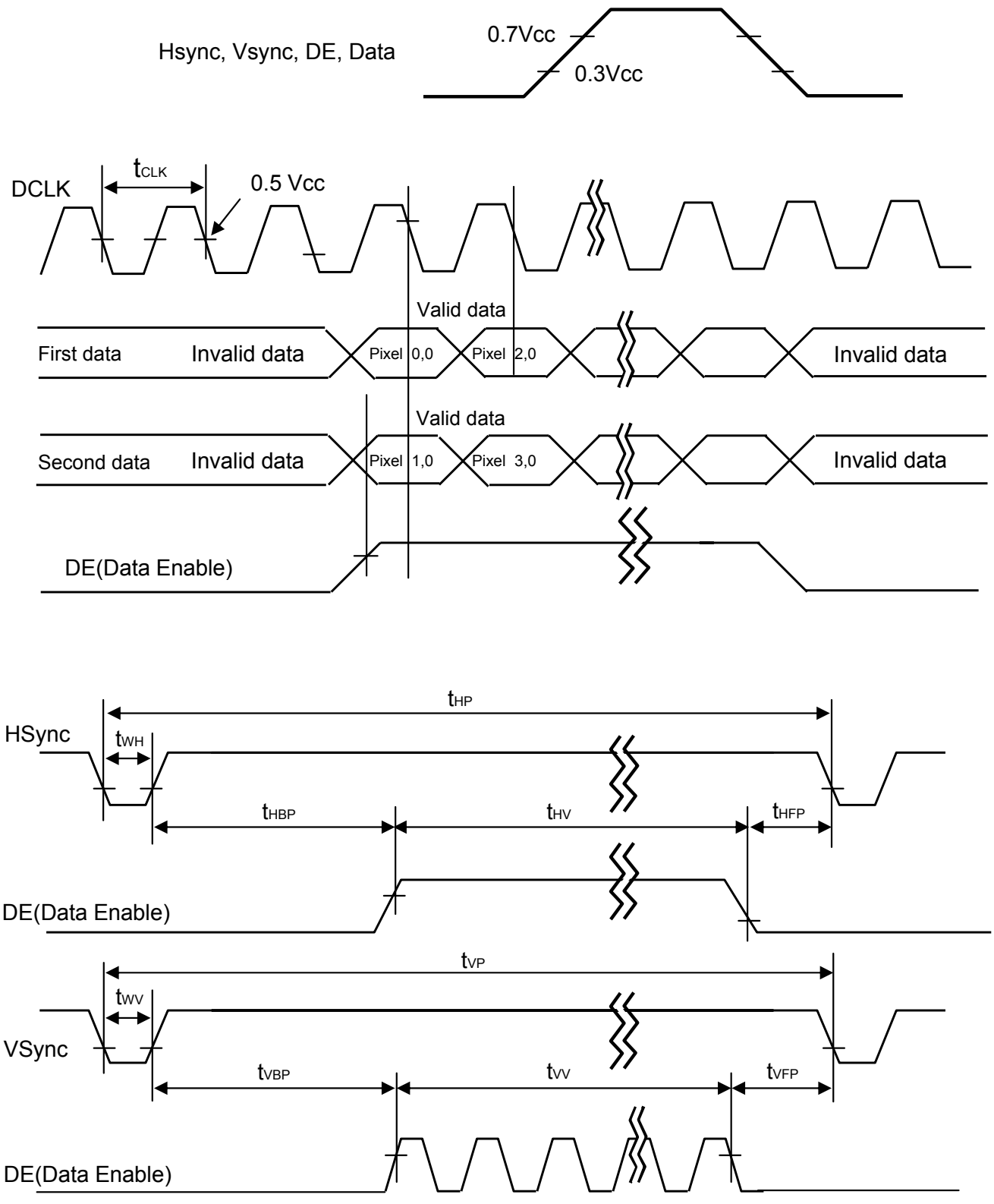

3-5. Color Input Data Reference

The Brightness of each primary color(red,green,blue) is based on the 8-bit gray scale data input for the color; the higher the binary input, the brighter the color. The table below provides a reference for color versus data input.

Table 8. COLOR DATA REFERENCE

Color		Input Color Data																									
		RED								GREEN								BLUE									
		MSB							LSB	MSB							LSB	MSB							LSB		
		R7	R6	R5	R4	R3	R2	R1	R0	G7	G6	G5	G4	G3	G2	G1	G0	B7	B6	B5	B4	B3	B2	B1	B0		
Basic Color	Black	0	0	0	0	0	0	0	0	0	0	0	0	0	0	0	0	0	0	0	0	0	0	0	0		
	Red (255)	1	1	1	1	1	1	1	1	0	0	0	0	0	0	0	0	0	0	0	0	0	0	0	0		
	Green (255)	0	0	0	0	0	0	0	0	1	1	1	1	1	1	1	1	0	0	0	0	0	0	0	0		
	Blue (255)	0	0	0	0	0	0	0	0	0	0	0	0	0	0	0	0	1	1	1	1	1	1	1	1		
	Cyan	0	0	0	0	0	0	0	0	1	1	1	1	1	1	1	1	1	1	1	1	1	1	1	1		
	Magenta	1	1	1	1	1	1	1	1	0	0	0	0	0	0	0	0	1	1	1	1	1	1	1	1		
	Yellow	1	1	1	1	1	1	1	1	1	1	1	1	1	1	1	1	0	0	0	0	0	0	0	0		
	White	1	1	1	1	1	1	1	1	1	1	1	1	1	1	1	1	1	1	1	1	1	1	1	1		
RED	RED (000) Dark	0	0	0	0	0	0	0	0	0	0	0	0	0	0	0	0	0	0	0	0	0	0	0	0		
	RED (001)	0	0	0	0	0	0	0	1	0	0	0	0	0	0	0	0	0	0	0	0	0	0	0	0		
	...	...								...								...									
	RED (254)	1	1	1	1	1	1	1	0	0	0	0	0	0	0	0	0	0	0	0	0	0	0	0	0		
	RED (255)	1	1	1	1	1	1	1	1	0	0	0	0	0	0	0	0	0	0	0	0	0	0	0	0		
GREEN	GREEN (000) Dark	0	0	0	0	0	0	0	0	0	0	0	0	0	0	0	0	0	0	0	0	0	0	0	0		
	GREEN (001)	0	0	0	0	0	0	0	0	0	0	0	0	0	0	0	1	0	0	0	0	0	0	0	0		
	...	...								...								...									
	GREEN (254)	0	0	0	0	0	0	0	0	1	1	1	1	1	1	1	0	0	0	0	0	0	0	0	0		
	GREEN (255)	0	0	0	0	0	0	0	0	1	1	1	1	1	1	1	1	0	0	0	0	0	0	0	0		
BLUE	BLUE (000) Dark	0	0	0	0	0	0	0	0	0	0	0	0	0	0	0	0	0	0	0	0	0	0	0	0		
	BLUE (001)	0	0	0	0	0	0	0	0	0	0	0	0	0	0	0	0	0	0	0	0	0	0	0	1		
	...	...								...								...									
	BLUE (254)	0	0	0	0	0	0	0	0	0	0	0	0	0	0	0	0	1	1	1	1	1	1	1	0		
	BLUE (255)	0	0	0	0	0	0	0	0	0	0	0	0	0	0	0	0	1	1	1	1	1	1	1	1		

3-6. Power Sequence

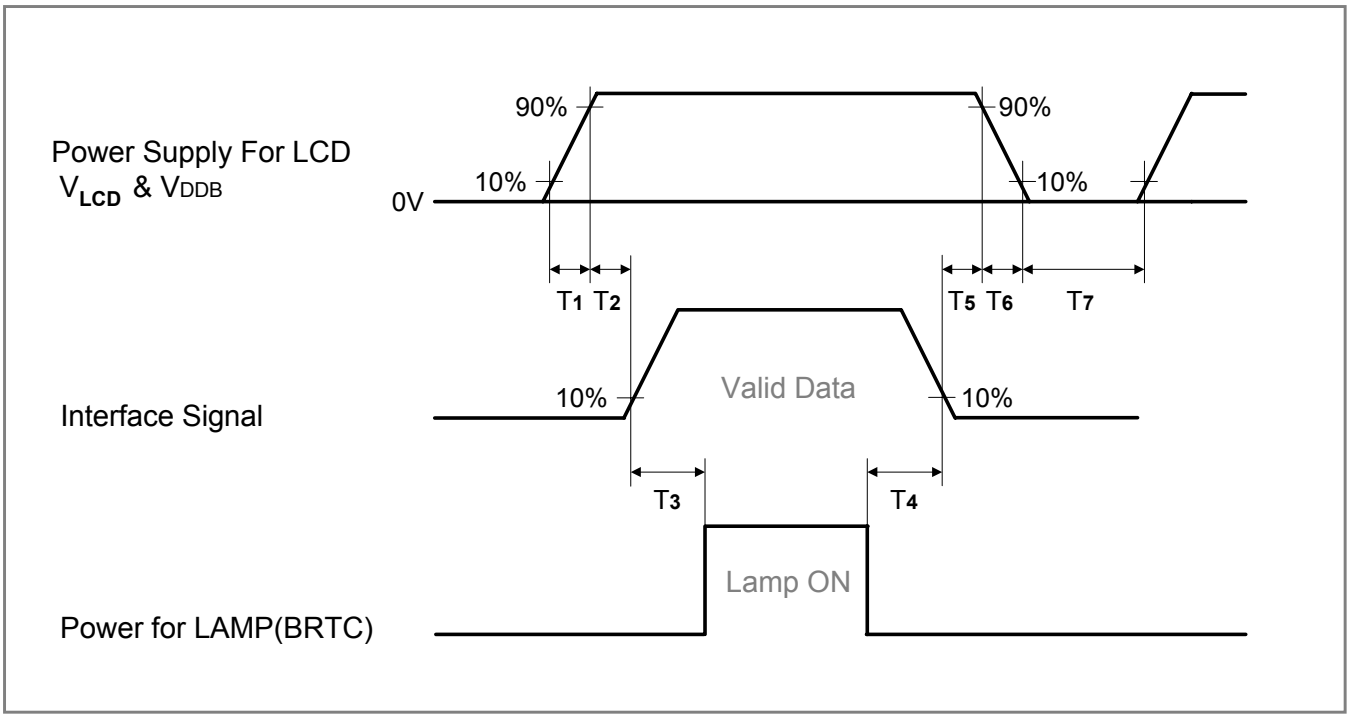

Table 9. POWER SEQUENCE

Parameter	Values			Units
	Min	Typ	Max	
T1	1	-	10	ms
T2	0.5	-	50	ms
T3	200	-	-	ms
T4	200	-	-	ms
T5	0.5	-	50	ms
T6	-	-	10	ms
T7	1	-	-	s

Notes : 1. Please avoid floating state of interface signal at invalid period.
2. When the interface signal is invalid, be sure to pull down the power supply for LCD V_{LCD} to 0V.
3. Lamp power must be turn on after power supply for LCD an interface signal are valid.

4. Optical Specification

Optical characteristics are determined after the unit has been 'ON' and stable for approximately 30min in a dark environment at 25±2°C. The values specified are at an approximate distance 50cm from the LCD surface at a viewing angle of Φ and θ equal to 0 °.
FIG. 1 presents additional information concerning the measurement equipment and method.

FIG. 1 Optical Characteristic Measurement Equipment and Method

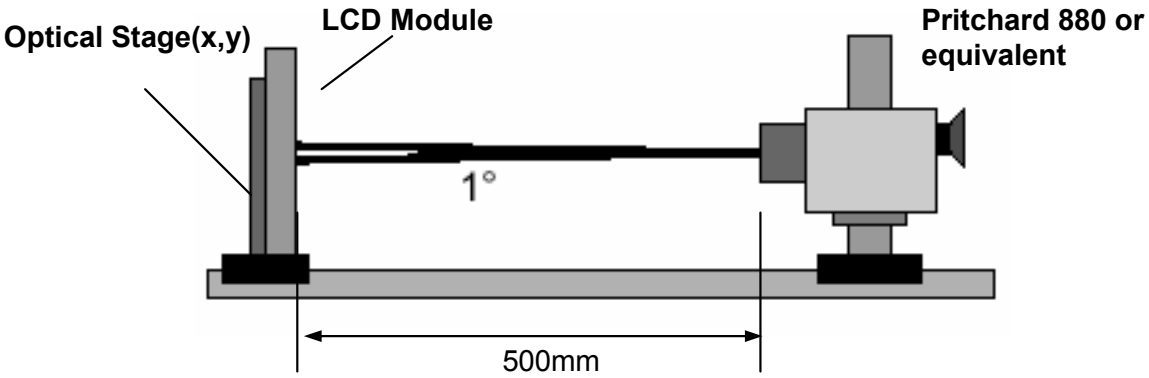

Table 10. OPTICAL CHARACTERISTICS

Ta:25±2 °C, V_{LCD}:12.0V, fv:60Hz, Dclk:80MHz, V_{BR}=High

Parameter		Symbol	Values			Units	Notes
			Min	Typ	Max		
Contrast Ratio		CR	350	500			1
Surface Luminance, white		L_{WH}	300	450		cd/m^2	2
Luminance Variation		δ_{WHITE} | 5P		-	TBD		3
Response Time	Rise Time	TrR		7.5	TBD	ms	4
	Decay Time	TrD		8.5	TBD		
Color Coordinates							
	RED	RX	Typ –0.03	TBD	Typ +0.03		
		RY		TBD			
	GREEN	GX		TBD			
		GY		TBD			
	BLUE	BX		TBD			
		BY		TBD			
	WHITE	WX		0.285			
		WY		0.293			
Viewing Angle (CR>10)							
	x axis, right(ϕ=0°)	θr	85	88	-	degree	5
	x axis, left (ϕ=180°)	θl	85	88	-		
	y axis, up (ϕ=90°)	θu	85	88	-		
	y axis, down (ϕ=270°)	θd	85	88	-		
Gray Scale				TBD			6

Notes : 1. Contrast Ratio(CR) is defined mathematically as :

$$\text{Contrast Ratio} = \frac{\text{Surface Luminance with all white pixels}}{\text{Surface Luminance with all black pixels}}$$

Surface luminance is the center point(1).

2. Surface luminance is the center point(1) across the LCD surface 50cm from the surface with all pixels displaying white under the condition of I_{BL}=6mArms. For more information see FIG 1.

3. The variation in surface luminance , δ WHITE is defined by measuring L_{ON} at watch test position 1 through 5, and then dividing maximum L_{ON} of 5 points luminance by minimum L_{ON} of each 5points luminance. For more information see FIG 2.

δ WHITE = Maximum (L_{ON1}, L_{ON2}, ..., L_{ON5}) / Minimum (L_{ON1}, L_{ON2}, ..., L_{ON5})

4. Response time is the time required for the display to transition from black to white (Rise Time, T_{rR}) and from white to black (Decay Time, T_{rD}). For additional information see FIG 3.

5. Viewing angle is the angle at which the contrast ratio is greater than 10. The angles are determined for the horizontal or x axis and the vertical or y axis with respect to the z axis which is normal to the LCD surface. For more information see FIG 4.

6. Gray scale specification
Gamma Value is approximately 2.2. For more information see Table 11.

Table 11. Gray Scale Specification

Gray Level	Luminance [%] (Typ)
L0	0.30
L15	0.65
L31	1.20
L47	2.50
L63	4.68
L79	7.80
L95	11.7
L111	16.0
L127	21.2
L143	27.7
L159	35.2
L175	43.5
L191	53.0
L207	63.7
L223	75.4
L239	86.4
L255	100

FIG. 2 Luminance

<measuring point for surface luminance & measuring point for luminance variation>

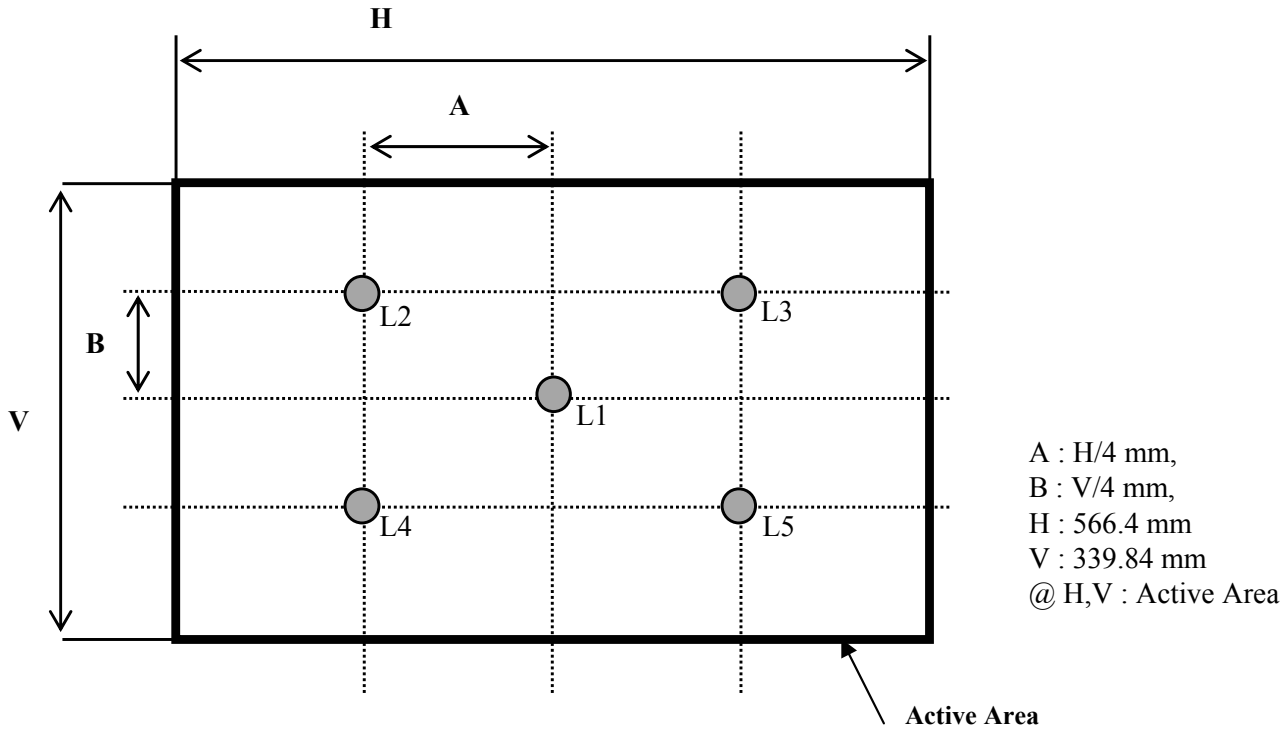

A : H/4 mm,
B : V/4 mm,
H : 566.4 mm
V : 339.84 mm
@ H,V : Active Area

FIG. 3 Response Time

The response time is defined as the following figure and shall be measured by switching the input signal for “black” and “white”.

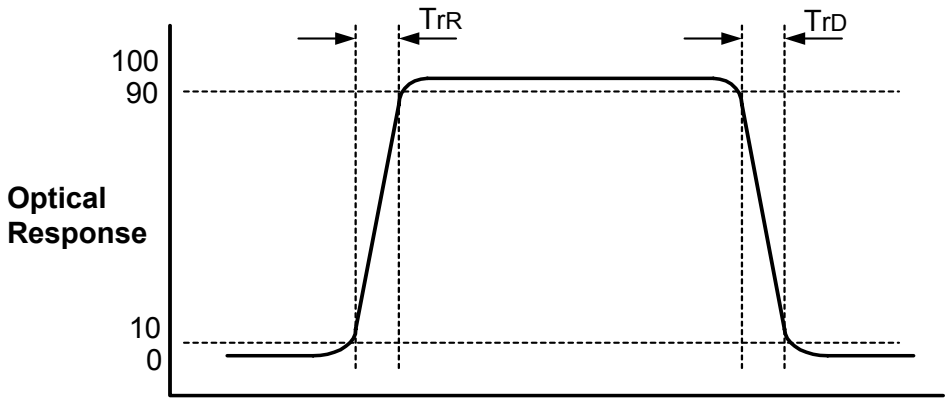

FIG. 4 Viewing angle

<Dimension of viewing angle range>

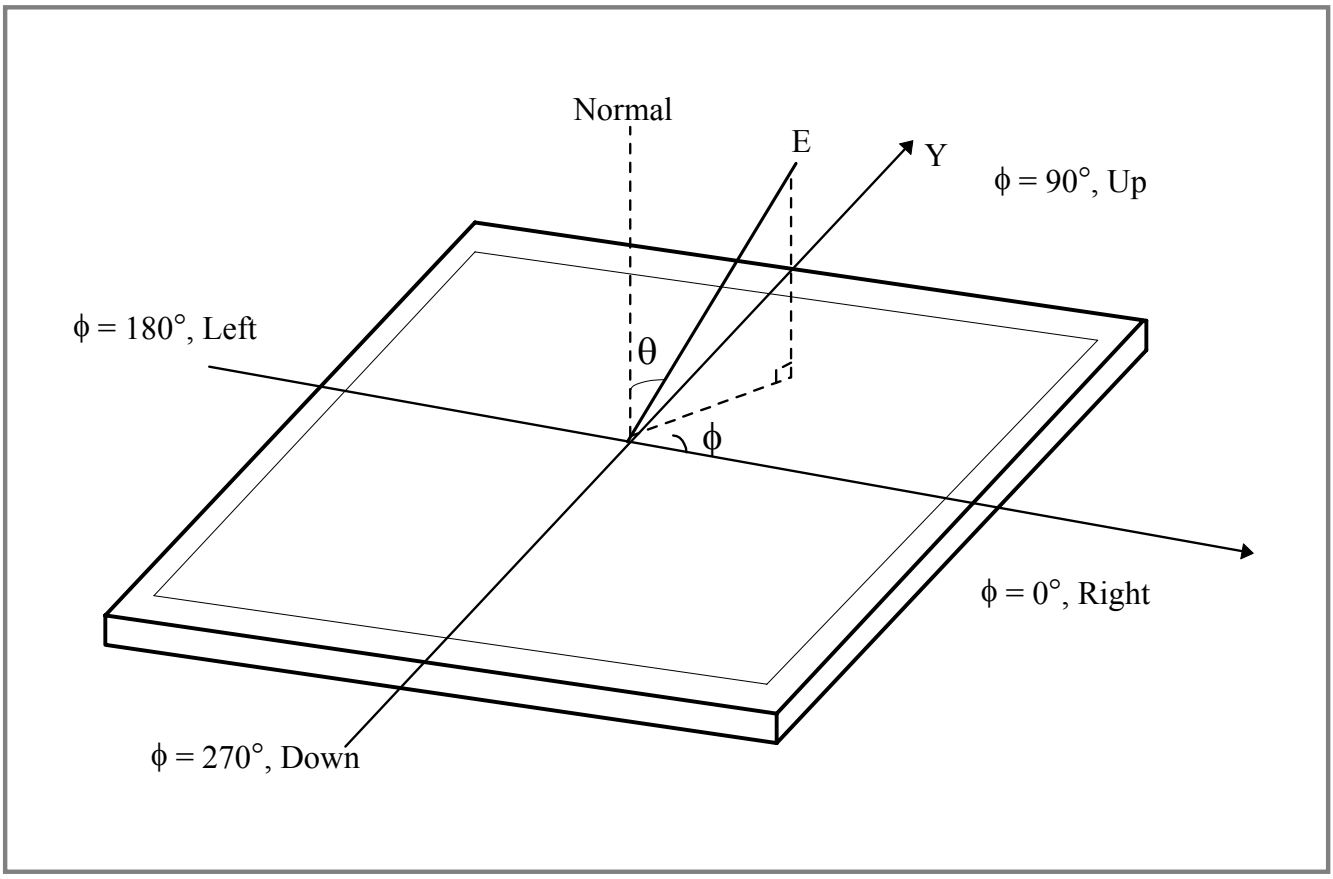

5. Mechanical Characteristics

The contents provide general mechanical characteristics. In addition the figures in the next page are detailed mechanical drawing of the LCD.

Outline Dimension	Horizontal	622.0mm
	Vertical	389.0mm
	Depth	53.0mm
Bezel Area	Horizontal	571.4mm
	Vertical	344.9mm
Active Display Area	Horizontal	566.4mm
	Vertical	339.84mm
Weight	TBD	
Surface Treatment	Hard coating(3H) Anti-glare treatment of the front polarizer	

Note : See Attached Drawing(Front / Rear View)

<FRONT VIEW>

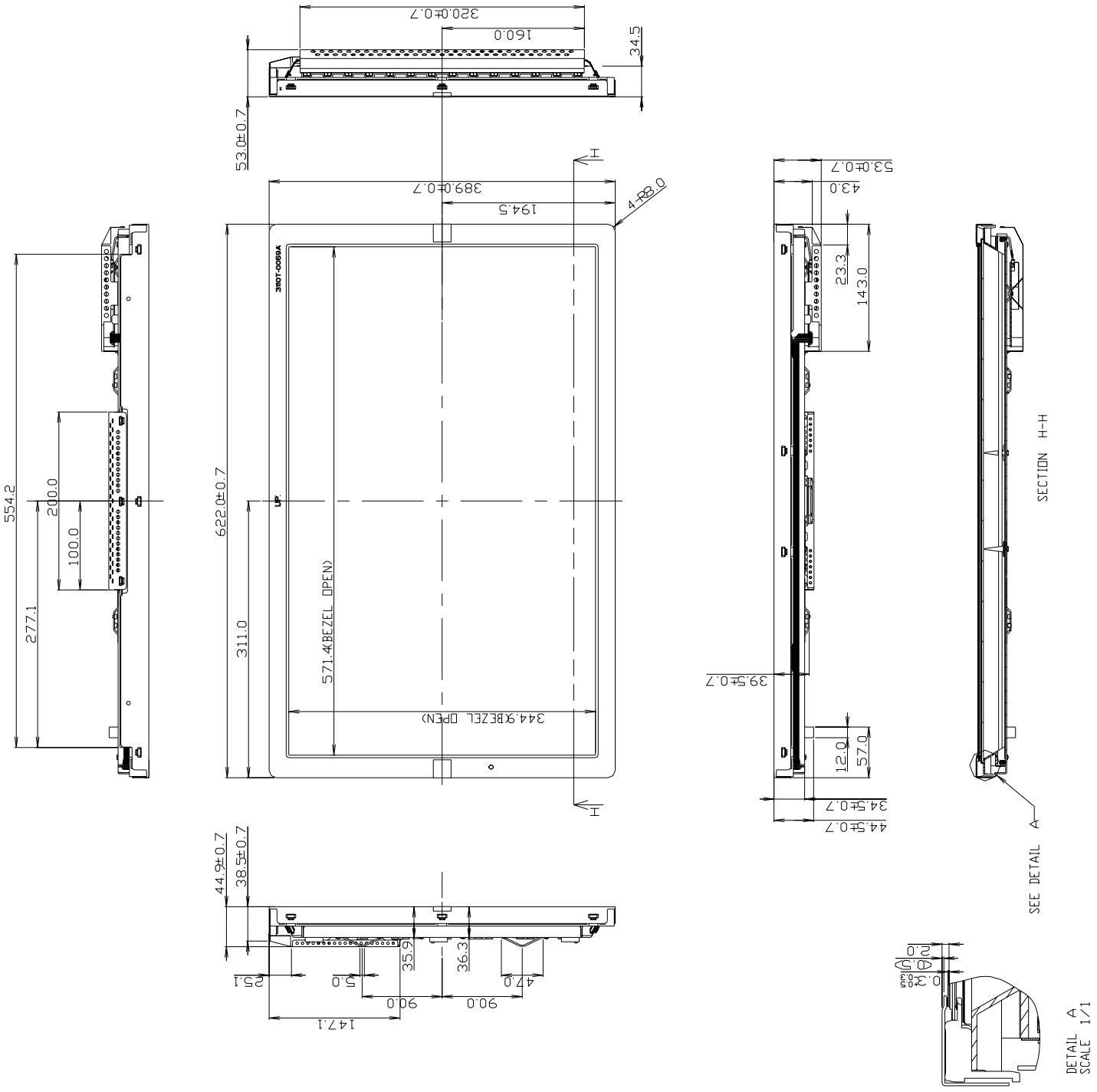
320.0±0.7
160.0
34.5
53.0±0.7
389.0±0.7
194.5
4-R3.0
554.2
200.0
100.0
277.1
622.0±0.7
311.0
571.4(BEZEL OPEN)
344.9(BEZEL OPEN)
53.0±0.7
43.0
23.3
143.0
39.5±0.7
12.0
57.0
34.5±0.7
44.5±0.7
SECTION H-H
SEE DETAIL A
44.9±0.7
38.5±0.7
35.9
36.3
2.1
5.0
47.0
90.0
90.0
147.1
DETAIL A
SCALE 1/1

<REAR VIEW>

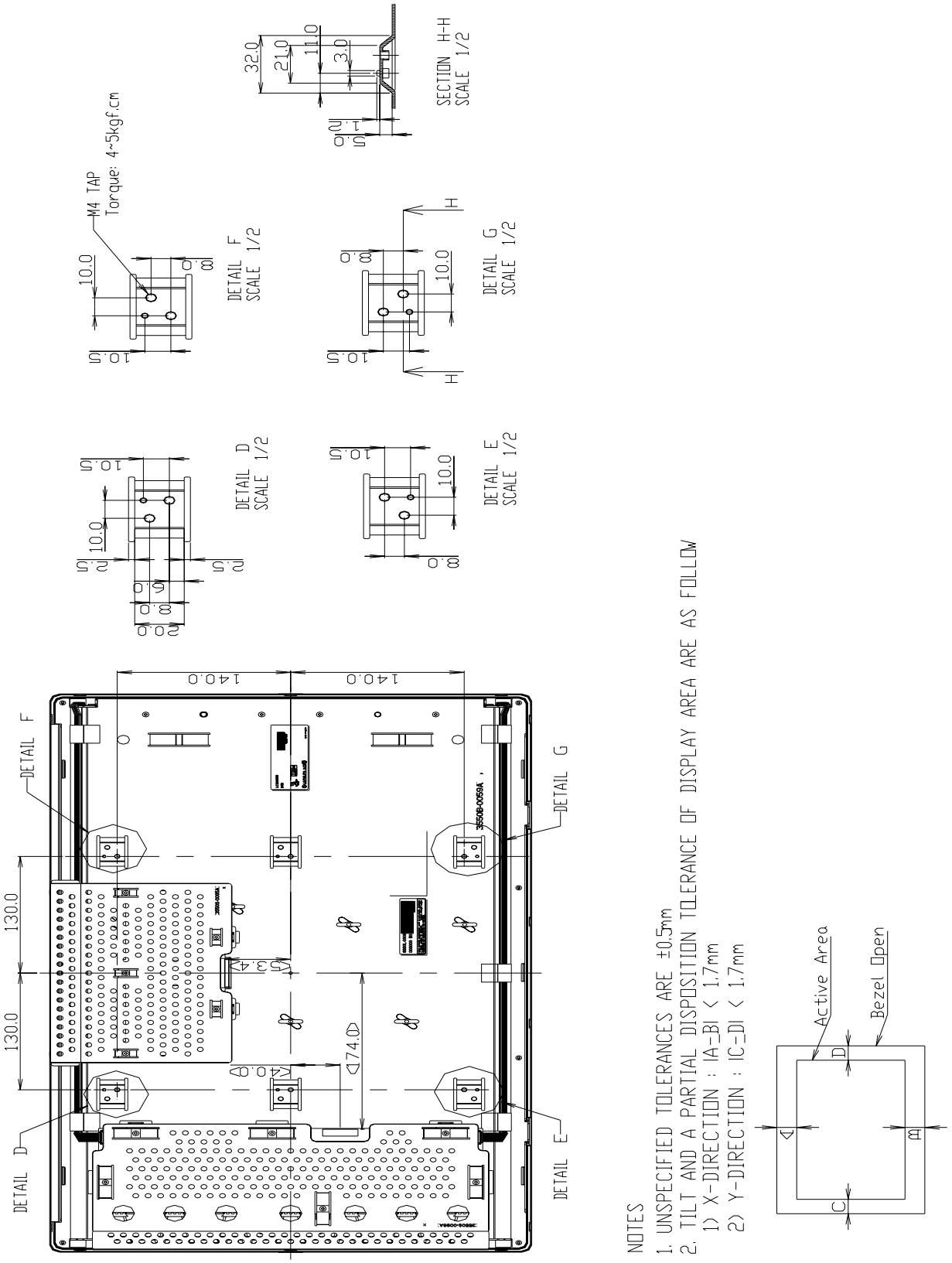
SECTION H-H
SCALE 1/2
32.0
21.0
11.0
3.0
M4 TAP
Torque: 4~5kgf.cm
DETAIL F
SCALE 1/2
DETAIL G
SCALE 1/2
DETAIL D
SCALE 1/2
DETAIL E
SCALE 1/2
10.0
140.0
130.0
174.0
DETAIL F
DETAIL G
DETAIL D
DETAIL E
NOTES
1. UNSPECIFIED TOLERANCES ARE ±0.5mm
2. TILT AND A PARTIAL DISPOSITION TOLERANCE OF DISPLAY AREA ARE AS FOLLOW
1) X-DIRECTION : IA-BI < 1.7mm
2) Y-DIRECTION : IC-DI < 1.7mm
Active Area
Bezel Open

6. Reliability

Environment test condition

No	Test Item	Condition
1	High temperature storage test	Ta= 60°C 240h
2	Low temperature storage test	Ta= -20°C 240h
3	High temperature operation test	Ta= 50°C 50%RH 240h
4	Low temperature operation test	Ta= 0°C 240h
5	Vibration test (non-operating)	Wave form : random Vibration level : 1.0Grms Bandwidth : 10-500Hz Duration : X,Y,Z, 10 min One time each direction
6	Shock test (non-operating)	Shock level : 100Grms Waveform : half sine wave, 2ms Direction : ±X, ±Y, ±Z One time each direction
7	Humidity condition Operation	Ta= 40 °C ,90%RH
8	Altitude operating storage / shipment	0 - 14,000 feet(4267.2m) 0 - 40,000 feet(12192m)

7. International Standards

7-1. Safety

a) UL 60950 Third Edition, Underwriters Laboratories, Inc. Dated Dec. 11, 2000.
Standard for Safety of Information Technology Equipment Including Electrical Business Equipment.
b) CAN/CSA C22.2 No. 60950, Third Edition, Canadian Standards Association, Dec. 1, 2000.
Standard for Safety of Information Technology Equipment Including Electrical Business Equipment.
c) EN 60950 : 2000, Third Edition
IEC 60950 : 1999, Third Edition
European Committee for Electrotechnical Standardization(CENELEC)
EUROPEAN STANDARD for Safety of Information Technology Equipment Including Electrical Business Equipment.

7-2. EMC

a) ANSI C63.4 “Methods of Measurement of Radio-Noise Emissions from Low-Voltage Electrical and Electrical Equipment in the Range of 9kHZ to 40GHz. “American National Standards Institute(ANSI), 1992
b) C.I.S.P.R “Limits and Methods of Measurement of Radio Interface Characteristics of Information Technology Equipment.“ International Special Committee on Radio Interference.
c) EN 55022 “Limits and Methods of Measurement of Radio Interface Characteristics of Information Technology Equipment.“ European Committee for Electrotechnical Standardization.(CENELEC), 1998 (Including A1:2000)

8. Packing

8-1. Designation of Lot Mark

a) Lot Mark

A	B	C	D	E	F	G	H	I	J	K	L	M

A,B,C : SIZE
D : YEAR
E : MONTH
F,G : PANEL CODE
H : ASSEMBLY CODE
I,J,K,L,M : SERIAL NO.

Note

1. YEAR

Year	97	98	99	2000	2001	2002	2003	2004	2005	2006	2007
Mark	7	8	9	0	1	2	3	4	5	6	7

2. MONTH

Month	Jan	Feb	Mar	Apr	May	Jun	Jul	Aug	Sep	Oct	Nov	Dec
Mark	1	2	3	4	5	6	7	8	9	A	B	C

3. Serial No.

Year	1 ~ 99999	100000 ~
Mark	00001 ~ 99999	A0001 ~ A9999, ... , Z9999

b) Location of Lot Mark

Serial NO. is printed on the label. The label is attached to the backside of the LCD module.
This is subject to change without prior notice.

8-2. Packing Form

a) Package quantity in one box : 4pcs

b) Box Size : 853X497X555

9. PRECAUTIONS

Please pay attention to the followings when you use this TFT LCD module.

9-1. MOUNTING PRECAUTIONS

(1) You must mount a module using holes arranged in four corners or four sides.
(2) You should consider the mounting structure so that uneven force (ex. Twisted stress) is not applied to the module. And the case on which a module is mounted should have sufficient strength so that external force is not transmitted directly to the module.
(3) Please attach the surface transparent protective plate to the surface in order to protect the polarizer. Transparent protective plate should have sufficient strength in order to the resist external force.
(4) You should adopt radiation structure to satisfy the temperature specification.
(5) Acetic acid type and chlorine type materials for the cover case are not desirable because the former generates corrosive gas of attacking the polarizer at high temperature and the latter causes circuit break by electro-chemical reaction.
(6) Do not touch, push or rub the exposed polarizers with glass, tweezers or anything harder than HB pencil lead. And please do not rub with dust clothes with chemical treatment.
Do not touch the surface of polarizer for bare hand or greasy cloth.(Some cosmetics are detrimental to the polarizer.)
(7) When the surface becomes dusty, please wipe gently with absorbent cotton or other soft materials like chamois soaks with petroleum benzene. Normal-hexane is recommended for cleaning the adhesives used to attach front / rear polarizers. Do not use acetone, toluene and alcohol because they cause chemical damage to the polarizer.
(8) Wipe off saliva or water drops as soon as possible. Their long time contact with polarizer causes deformations and color fading.
(9) Do not open the case because inside circuits do not have sufficient strength.

9-2. OPERATING PRECAUTIONS

(1) The spike noise causes the mis-operation of circuits. It should be lower than following voltage :
V=±200mV(Over and under shoot voltage)

(2) Response time depends on the temperature.(In lower temperature, it becomes longer.)
(3) Brightness depends on the temperature. (In lower temperature, it becomes lower.)
And in lower temperature, response time(required time that brightness is stable after turned on) becomes longer.
(4) Be careful for condensation at sudden temperature change. Condensation makes damage to polarizer or electrical contacted parts. And after fading condensation, smear or spot will occur.
(5) When fixed patterns are displayed for a long time, remnant image is likely to occur.
(6) Module has high frequency circuits. Sufficient suppression to the electromagnetic interference shall be done by system manufacturers. Grounding and shielding methods may be important to minimized the interference.
(7) Please do not give any mechanical and/or acoustical impact to LCM. Otherwise, LCM can not be operated its full characteristics perfectly.
(8) A screw which is fastened up the steels should be a machine screw (if not, it causes metal foreign material and deal LCM a fatal blow)
(9) Please do not set LCD on its edge.

9-3. ELECTROSTATIC DISCHARGE CONTROL

Since a module is composed of electronic circuits, it is not strong to electrostatic discharge. Make certain that treatment persons are connected to ground through wrist band etc. And don't touch interface pin directly.

9-4. PRECAUTIONS FOR STRONG LIGHT EXPOSURE

Strong light exposure causes degradation of polarizer and color filter.

9-5. STORAGE

When storing modules as spares for a long time, the following precautions are necessary.

(1) Store them in a dark place. Do not expose the module to sunlight or fluorescent light. Keep the temperature between 5°C and 35°C at normal humidity.
(2) The polarizer surface should not come in contact with any other object.
It is recommended that they be stored in the container in which they were shipped.

9-6. HANDLING PRECAUTIONS FOR PROTECTION FILM

(1) The protection film is attached to the bezel with a small masking tape.
When the protection film is peeled off, static electricity is generated between the film and polarizer. This should be peeled off slowly and carefully by people who are electrically grounded and with well ion-blown equipment or in such a condition, etc.
(2) When the module with protection film attached is stored for a long time, sometimes there remains a very small amount of glue still on the bezel after the protection film is peeled off.
(3) You can remove the glue easily. When the glue remains on the bezel surface or its vestige is recognized, please wipe them off with absorbent cotton waste or other soft material like chamois soaked with normal -hexane.