TECHNICAL DESCRIPTION

Trademarks:
Canon Inc.'s trademark, logos, product names, service marks and those trademark, logos, product names, service marks licensed to Canon Inc. by any of its affiliate or subsidiary are registered or unregistered marks of Canon Inc. or such affiliate or subsidiary in Japan and/or other countries.
Adobe, the Adobe logo, Acrobat, the Acrobat logo and Reader are either registered trademarks or trademarks of Adobe Systems Incorporated in the United States of America and/or other countries.
All other trademarks, product names, service marks are generally either registered or unregistered marks of their respective owners.

Copyright:
All copyrights in the content of this Service Manual are owned or controlled by Canon Inc. You are not permitted to copy, reproduce, download, modify, adapt or translate in any way the content of this Service Manual for any purpose other than the purpose contemplated herein without prior written consent of Canon Inc.

CONTENTS

1. Functions of each unit
   1.1 MAIN PCB ASS'Y ---------- 1
   1.2 TOP PCB ASS'Y ---------- 1
2. Outline of Circuits
   2.1 Power Supply Control ---------- 2
      2.1.1 Power Supply Block Diagram ---------- 2
      2.1.2 Power Supply Control Sequence ---------- 2
   2.2 Signal Processing ---------- 3
      2.2.1 System Control ---------- 3
      2.2.2 Picture Processing ---------- 4
3. Troubleshooting
   3.1 When an Error Code is Displayed ---------- 5
   3.2 When a Problem Occurs ---------- 7
   3.3 Simplified Troubleshooting ---------- 8
      3.3.1 Points to Check When the Power Does Not Come On ---------- 8
      3.3.2 Points to Check When the Flash Does Not Work ---------- 9
      3.3.3 Points to Check When the LCD Is Not Correct ---------- 9
   3.4 Check Pad ---------- 10
      3.4.1 Check Pad Table ---------- 10
      3.4.2 Position of the Check Pad ---------- 11

1. Functions of each unit

1.1 MAIN PCB ASS'Y

1) Driving the CCD Sensor.
2) Conversion of the image signal from the analog signal to the digital signal.
3) Controlling the power supply and the system. (Refer to Sections 2.1 and 2.2.)
4) Image processing, and reading and writing the image signal to and from the SD card. (Refer to Section 2.2.2.)
5) Power supply drive (DC/DC converter).
6) Battery control circuit.
7) Flash drive and charging circuit for the flash.
8) Back Light drive for LCD.

1.2 TOP PCB ASS'Y

1) Power supply, Shutter Button.

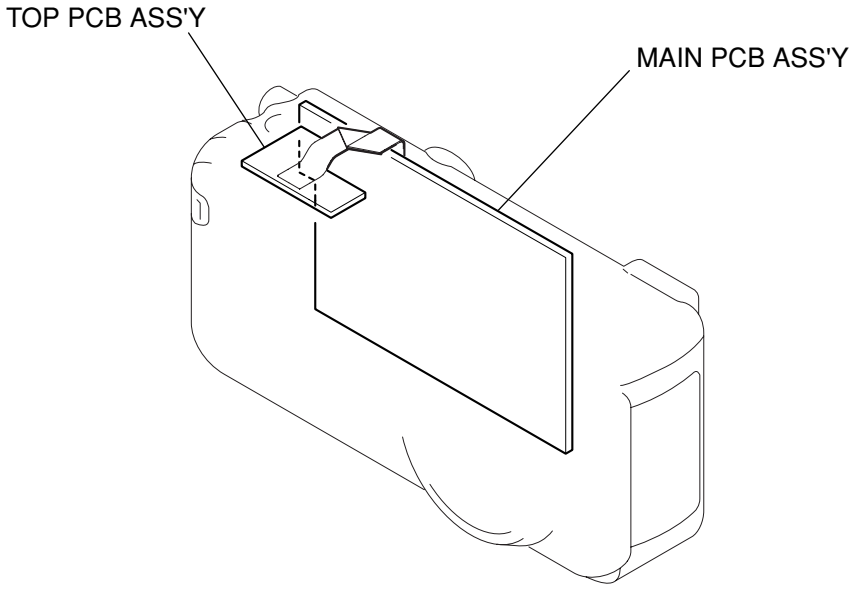

Fig. 1 CIRCUIT BOARD LOCATION

2. Outline of Circuits

2.1 Power Supply Control

The power supply is controlled by the DIGIC II mounted on the MAIN PCB ASS'Y.

2.1.1 Power Supply Block Diagram

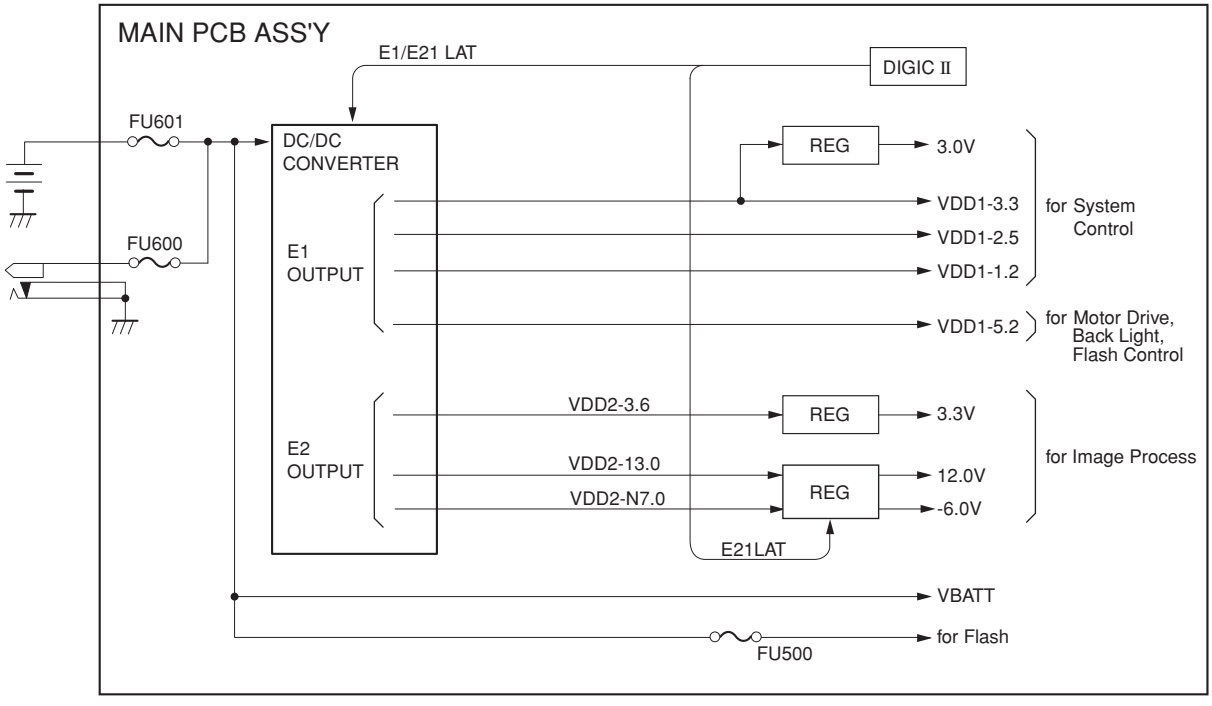

Fig. 2 Power System Block Diagram

2.1.2 Power Supply Control Sequence

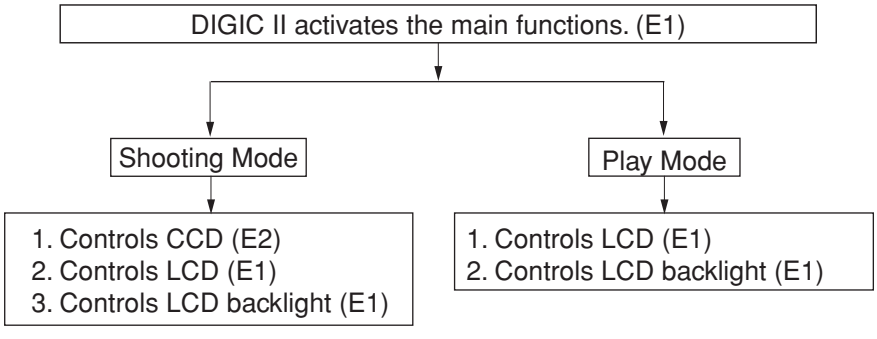

2.2 Signal Processing

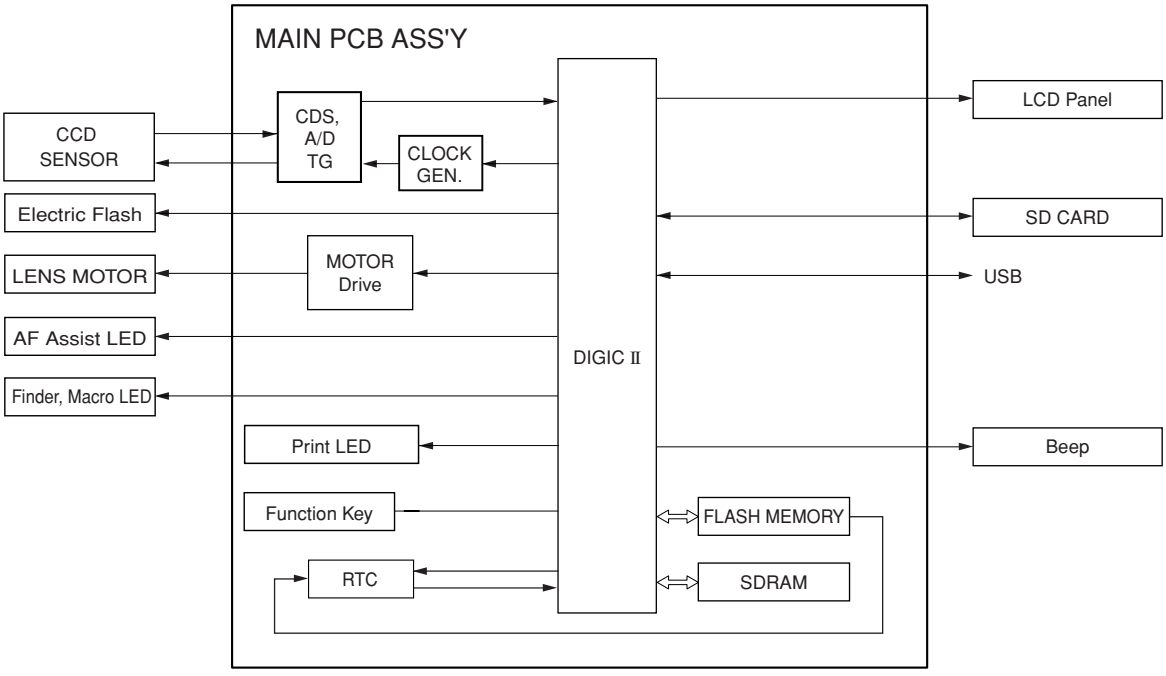

Fig. 3 Signal System Block Diagram

2.2.1 System Control

The DIGIC II on the MAIN PCB ASS'Y controls the motor ahd shutter of optical unit, Image processing, operation KEY receiver, Digital communication and flowing circuits.

- CDS, A/D, TG : CCD signal processing, Conversion of the digital data, Creation of the CCD drive pulse
- RTC : Clock count for watch
- AF Assist LED : AF auxiliary lamp
- Electric Flash : Flash and charging circuit
- FLASH MEMORY : Firmware memory

2.2.2 Picture Processing

1) The drive pulse of the CCD sensor is created by the CDS, A/D, and TG.
   The picture signal by the drive pulse is output from CCD sensor.
   The output signal of the CCD picture is converted to the signal processing and the digital data by the CDS, A/D, and TG converters, and is sent to the DIGIC II.
   - The CDS, A/D, and TG are operated by both the sync. signal from the DIGIC II and the Clock from the Clock generator.
2) The DIGIC II circuit performs the following signal processing.
   - Processes the picture data (using the SDRAM).
   - Writes and reads the picture data to and from the SD card.
   - Outputs digital video signal to the LCD.
   - Inputs and outputs digital signal for the USB terminal.

3. Troubleshooting

3.1 When an Error Code is Displayed

[Remedy]

- Check for any abnormalities in the mounting of probable faulty parts or connector connections referring to the table below.
- Try replacing probable faulty parts referring to the below.

[NOTE]

- The error code is displayed on the LCD Monitor.
- Adjustments must be performed after the part has been replaced. For details, see the Adjustments chapter.

Error Code	Name	Occurrence Conditions	Cause and Probable Faulty Part
E01	AE TIME OUT	AE processing did not end within the specified time.	MAIN PCB ASS'Y
E02	AF TIME OUT	AF processing did not end within the specified time.	MAIN PCB ASS'Y
			OPTICAL UNIT
		The focus lens was not driven.	MAIN PCB ASS'Y
			OPTICAL UNIT
E03	EF TIME OUT	Auto Flash Control did not end within the specified time.	MAIN PCB ASS'Y
			OPTICAL UNIT
E04	AWB TIME OUT	AWB processing did not end within the specified time.	MAIN PCB ASS'Y
E09	JPEG DMA TIME OUT	JPEG processing did not end within the specified time.	MAIN PCB ASS'Y
E10	JPEG IC ERROR	JPEG compression processing did not end within the specified time.	MAIN PCB ASS'Y
E14	UNKNOWN	When an error of unknown cause occurs.	UNKNOWN
E16	IMAGING TIME OUT	When communication between CPU and peripheral IC is not completed within the specified time during recording using EVF or after completion of recording.	MAIN PCB ASS'Y
E18	ZOOM LENS ERROR	Movement of the lens barrel did not end within the specified time.	MAIN PCB ASS'Y
			OPTICAL UNIT
E23	MEMORY CARD NO SPACE	When the Memory Card becomes full during writing of photographed images to Memory Card, writing is repeatedly performed with the JPEG compression ratio successively increased to reduce the size of the image file until it can be successfully written to Memory Card. This error occurs when writing of the JPEG image file fails after 10 retries at increasingly higher compression ratios.	MAIN PCB ASS'Y

Error Code	Name	Occurrence Conditions	Cause and Probable Faulty Part
E24	POWER ON ERROR	The power of the imaging circuit on the MAIN PCB ASS'Y was not detected.	MAIN PCB ASS'Y
E26	CAPTURE TIME OUT	Writing of the photograph image to SDRAM did not end within the specified time.	MAIN PCB ASS'Y
E27	MEMORY WRITE TIME OVER	Data form the buffer was not written to the memory card within the specified time.	MEMORY CARD
E52	QUICK REVIEW ERROR	Review of the photograph image failed.	MAIN PCB ASS'Y

3.2 When a Problem Occurs

[Remedy]

- Check for any abnormalities in the mounting of probable faulty parts or connector connections referring to the table below.
- Try replacing probable faulty parts referring to the table below.

[NOTE]

- Adjustments must be performed after the part has been replaced. For details, see the Adjustments chapter.

Problem (when an error code is not displayed)	Defect position	Reference
The camera does not work.	MAIN PCB ASS'Y /CARD LID	CARD COVER OPEN DETECT SW ON cannot be turned on.
		CARD LID deformation
	BATTERY LID	BATTERY COVER OPEN DETECT SW ON cannot be turned on.
		BATTERY LID deformation
	TOP PCB ASS'Y	POWER SW ON cannot be turned on.
		POWER BUTTON cannot be turned on.
	FUSE (MAIN PCB ASS'Y)	FU600, FU601
The image is not displayed on the LCD Monitor.	MAIN PCB ASS'Y	
	LCD UNIT	
The photograph image is abnormal.	OPTICAL UNIT	
	MAIN PCB ASS'Y	
The zoom does not function.	OPTICAL UNIT	
	MAIN PCB ASS'Y	
The Built-in Flash does not fire.	FLASH UNIT	
	MAIN PCB ASS'Y	
	FUSE (MAIN PCB ASS'Y)	FU500
Communications with the personal computer is not possible.	MAIN PCB ASS'Y	
The SD card is not recognized.	SD CARD	
	MAIN PCB ASS'Y	DETECT SW ON cannot be turned on.
Buttons/The Mode dial do not work.	TOP PCB ASS'Y	
	MAIN PCB ASS'Y	

3.3 Simplified Troubleshooting

[Remedy]

- Check for any abnormalities in the mounting of probable faulty parts or connector connections referring to the table below.
- Try replacing probable faulty parts referring to the table below.

[NOTE]

- Adjustments must be performed after parts are replaced. For details, see the Adjustments chapter.

3.3.1 Points to Check When the Power Does Not Come On

	Procedure/Check point	Conceivable cause
1	Check whether the power is turned on when the AC adapter is connected.	If the power comes on: • FUSE FU601 of MAIN PCB ASS'Y is defective. • The battery of the connection is defective. • Soldering of MAIN PCB ASS'Y is defective.
2	Check whether the power is turned on when the battery is inserted.	If the power comes on: • FUSE FU600 of MAIN PCB ASS'Y is defective. • Soldering of MAIN PCB ASS'Y is defective.
3	Remove the rear cover, and discharge the capacitor.	
4	Close the battery cover.	
5	Check whether the power is turned on when short-circuiting the 1st pin (POWER_SW) and the 2nd pin (VBATT_RLS) of MAIN PCB ASS'Y's connecter CN1002 (5 pins in all). 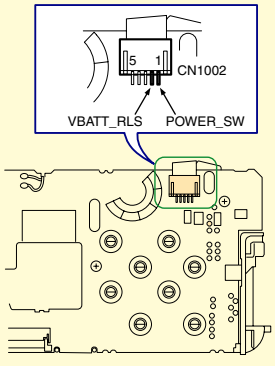 	If the power comes on: • TOP PCB ASS'Y is defective. If the power does not turn on. • MAIN PCB ASS'Y is defective.

	Procedure/Check point	Conceivable cause
6	Measure the voltage of the check pad CP602 of MAIN PCB ASS'Y. 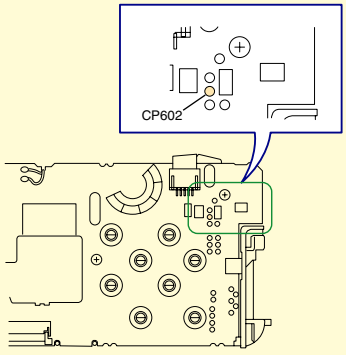	If there is not as much voltage as the input voltage to the camera: • MAIN PCB ASS'Y is defective.

3.3.2 Points to Check When the Flash Does Not Work

	Procedure/Check point	Conceivable cause
1	Remove the rear cover.	
2	Measure the conduction of FUSE FU 500 on MAIN PCB ASS'Y to check if it is normal.	If FUSE FU 500 is normal: • MAIN PCB ASS'Y is defective.

3.3.3 Points to Check When the LCD Is Not Correct

	Procedure/Check point	Conceivable cause
1	Turn the power on.	
2	Check if the display of the LCD PANEL is not turned off by pressing the DISP button.	If the LCD PANEL display is weak: • The LCD UNIT could be defective. When the LCD PANEL display is faded and E18 occurs after the power is turned on:
3	Check whether the screen turns white momentarily (or continuously) when the power is turned on.	If the screen turns white momentarily (or continuously): • The flexible board may be defective. If replacing the flexible board does not fix it: • LCD PANEL defect. (There is a possibility that the flexible board has been cut off.) If replacing the LCD PANEL does not fix it (If LCD PANEL is normal.): • MAIN PCB ASS'Y defect.
4	Toggle between the shooting mode and playback mode while looking into the barrel. Check whether the mechanical shutter opens and closes when toggling the mode.	If the mechanical shutter does not open/close when toggling the mode: • The OPTICAL UNIT could be defective.

3.4 Check Pad

It is possible to measure the voltage on the board by using a check pad.

3.4.1 Check Pad Table

[CAUTION]

- When measuring with a check pad, be careful not to short-circuit the pad next to the measured one.

MAIN PCB ASS'Y

Pad number	Signal	Voltage	Timing for measurement
CP612	VDD1-3.3	3.3V	After the power is turned on.
CP607	VDD1-1.2	1.2V	
CP608	VDD1-2.5	2.5V	
CP610	VDD2-3.6	3.6V	During the shooting mode.
CP614	VDD2-13.0	13.0V	
CP615	VDD2-N7.0	-7.0V	
CP609	VDD1-5.2	5.2V	After the power is turned on.
CP602	VBATT	Battery voltage or 7.4V (CA-PS700)	When a battery is inserted or while the AC adapter is connected.
CP604			
CP606			
CP603	GND	GND	
CP605			

3.4.2 Position of the Check Pad

[CAUTION]

- When measuring with a check pad, be careful not to short-circuit the pad next to the one being measured.

[NOTE]

- Refer to section 3.4.1 for the measurement timing when measuring by check pad.
- Confirm the position of other check pads on DIAGRAMS.
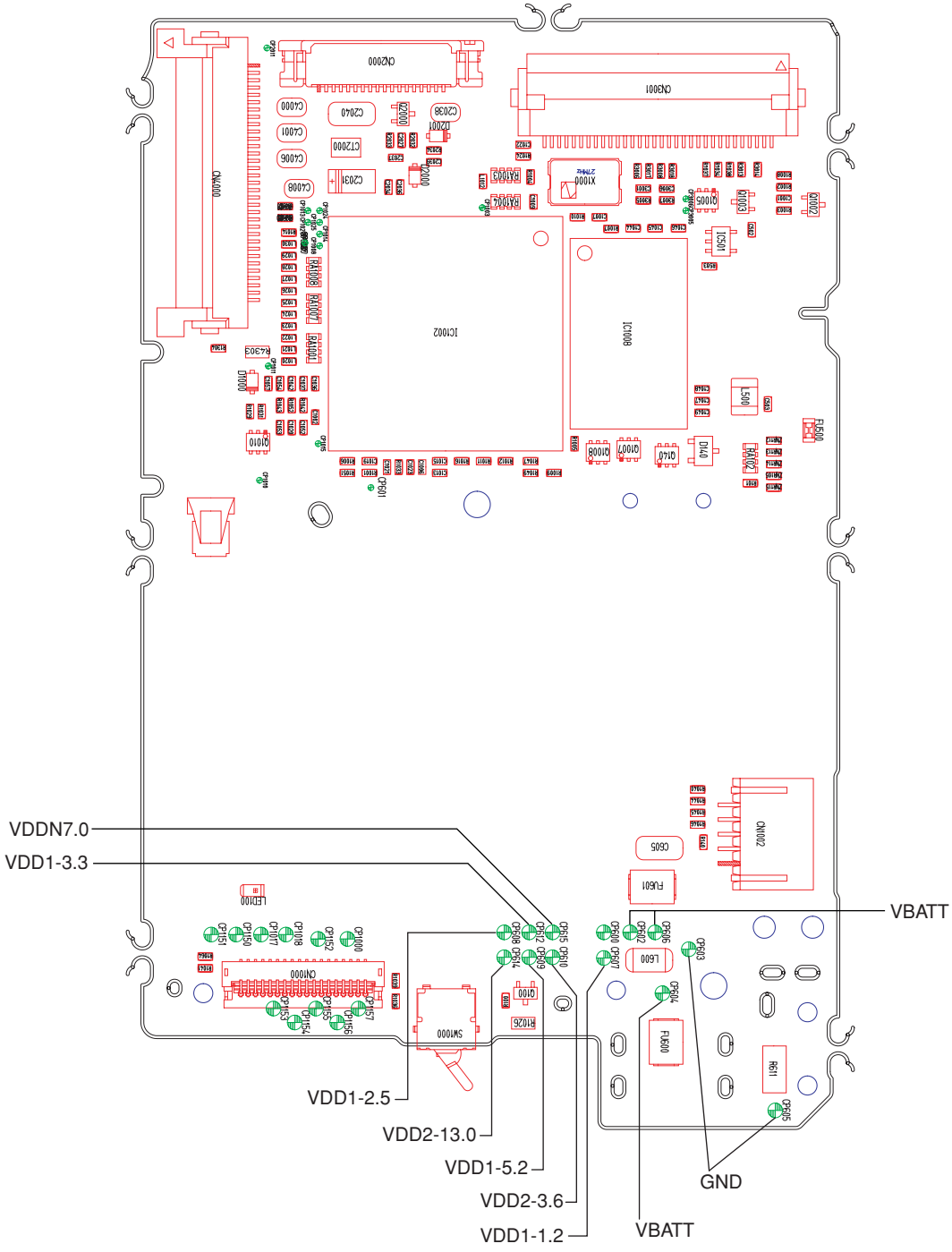
MAIN PCB ASS'Y