DISASSEMBLY

Trademarks:
Canon Inc.'s trademark, logos, product names, service marks and those trademark, logos, product names, service marks licensed to Canon Inc. by any of its affiliate or subsidiary are registered or unregistered marks of Canon Inc. or such affiliate or subsidiary in Japan and/or other countries.
Adobe, the Adobe logo, Acrobat, the Acrobat logo and Reader are either registered trademarks or trademarks of Adobe Systems Incorporated in the United States of America and/or other countries.
All other trademarks, product names, service marks are generally either registered or unregistered marks of their respective owners.

Copyright:
All copyrights in the content of this Service Manual are owned or controlled by Canon Inc. You are not permitted to copy, reproduce, download, modify, adapt or translate in any way the content of this Service Manual for any purpose other than the purpose contemplated herein without prior written consent of Canon Inc.

CONTENTS

1. Before Starting the Repair Work
   1.1 Precautions on Flash High Voltage Circuit ---------- 1
   1.2 List of Tools ---------- 1
   1.3 List of Supplies ---------- 1
   1.4 Connectors for FPC Board ---------- 2
2. Disassembly
   2.1 Procedure ---------- 3
   2.2 LITHIUM BATTERY HOLDER, LITHIUM BATTERY ---------- 4
   2.3 FRONT COVER UNIT ---------- 5
   2.4 REAR COVER SECTION-(1) ---------- 6
   2.5 REAR COVER SECTION-(2) ---------- 7
   2.6 LCD UNIT ---------- 8
   2.7 CROSS KEY BUTTON, PRINT BUTTON UNIT, MENU BUTTON, SET BUTTON ---------- 9
   2.8 MODE DIAL, MODE DIAL CONTACT, MODE DIAL BALL ---------- 10
   2.9 BATTERY COVER UNIT, BATTERY COVER SHAFT ---------- 11
   2.10 FINDER UNIT-(1) ---------- 12
   2.11 FINDER UNIT-(2) ---------- 13
   2.12 TOP PCB ASS'Y, GND PLATE ---------- 14
   2.13 MAIN PCB SECTION-(1) ---------- 15
   2.14 MAIN PCB SECTION-(2) ---------- 16
   2.15 MAIN PCB SECTION-(3) ---------- 17
   2.16 MAIN PCB SECTION-(4) ---------- 18
   2.17 TRIGGER CAP, MAIN SHEET ---------- 19
   2.18 FLASH UNIT, BUZZER UNIT-(1) ---------- 20
   2.19 FLASH UNIT, BUZZER UNIT-(2) ---------- 21
   2.20 MAIN PCB ASS'Y, SD GASKET, EMI SHEET ---------- 22
   2.21 CAPACITOR ---------- 23
   2.22 OPTICAL UNIT ---------- 24
   2.23 FRONT PLATE, BARRIER COVER-(1) ---------- 25
   2.24 FRONT PLATE, BARRIER COVER-(2) ---------- 26
   2.25 BARRIER PLATE, BARRIER CLOSE SPRING ---------- 27
   2.26 Screw List ---------- 28

1. Before Starting the Repair Work

Be sure to read the following precautions before starting the repair work.

1.1 Precautions on Flash High Voltage Circuit

- After the REAR COVER UNIT is removed, be sure to discharge the main capacitor.
  (Discharging resistor: 1 kΩ, approx. 5 W.)
- First contact the GND ⊖ terminal of the main capacitor with the discharging resistor. Then contact the positive ⊕ terminal of the main capacitor.

CAUTION:
This is a high voltage circuit, so be careful of electric shock.

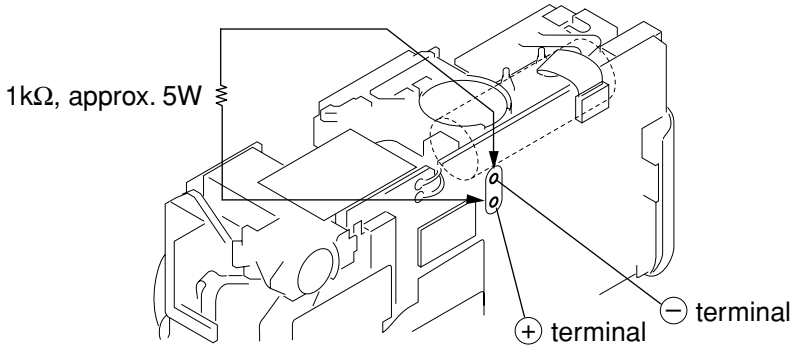

Fig. 1 Precautions on flash high voltage circuit

1.2 List of Tools

The following tools are used for re-assembling during service.

(1) List of tools

New	Name of tools	Part No.	Remarks
	Screwdriver (Commercially Available)		
	Tweezers (Commercially Available)		
	Soldering iron (Commercially Available)		

1.3 List of Supplies

The following supplies are used for re-assembling during service.
This product uses a lead-free solder for mounting.
To repair this product, use a lead-free solder.

(1) List of supplies

New	Name of supplies	Part No.	Remarks
	ADHESIVE TAPE SONY T4000	CY4-6012-000	Double-sided Tape (6mm × 50m roll)
	ADHESIVE TAPE 3M No.56	CY4-6018-000	Electric insulation Tape (15mm × 66m roll)
	LEAD FREE SOLDER RMA-98	CY9-4045-000	Lead-free solder
	LOGENEST RAMBDA A-74	CY9-8102-000	
	DIA BOND No.1663G	CY9-8129-000	

1.4 Connectors for FPC Board

This product uses four types of connectors for the FPC board.

① Type A

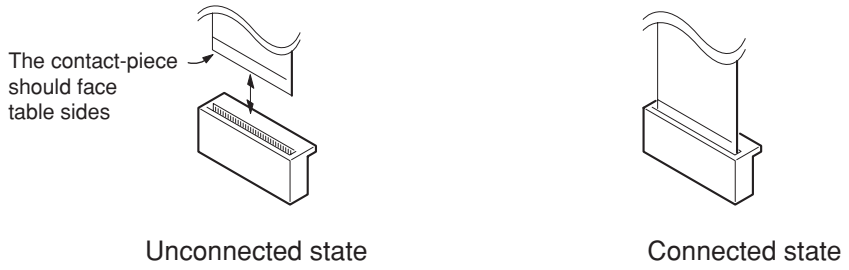

② Type B

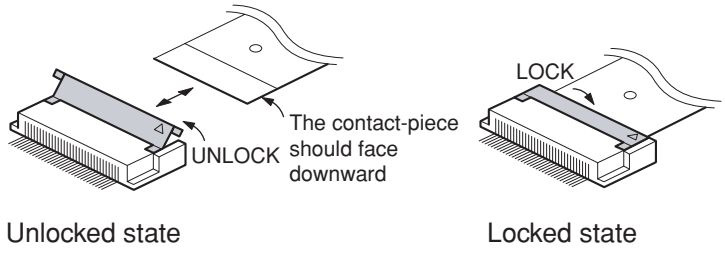

③ Type C

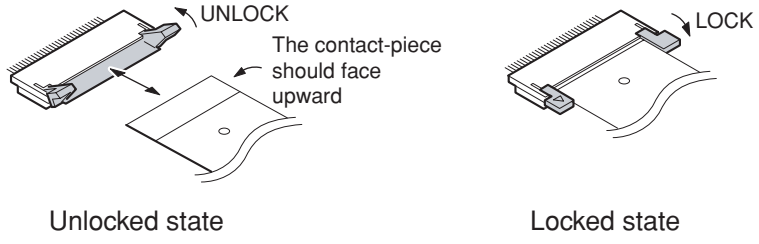

④ Type D

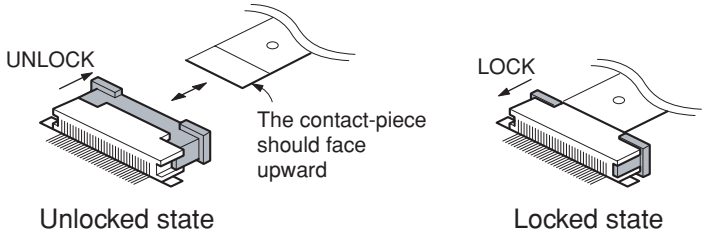

Fig. 2 Connectors for FPC board

CAUTIONS:

1. For Type B, Type C and Type D connectors, make sure to set them to the unlocked state before removing and inserting FPC board. After FPC board is inserted, set them to the locked state.
2. The FPC board is equipped with the holes as shown. Use them for removal and insertion by inserting the tweezers into them as required.

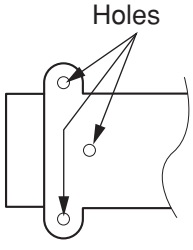

Fig. 3 Holes for removal

2. Disassembly

2.1 Procedure

Disassembly procedure of PowerShot A410 is shown by the following flowchart.
Reverse the disassembly procedure to reassemble them. ∗ The pages to refer to are shown in parentheses ( ).

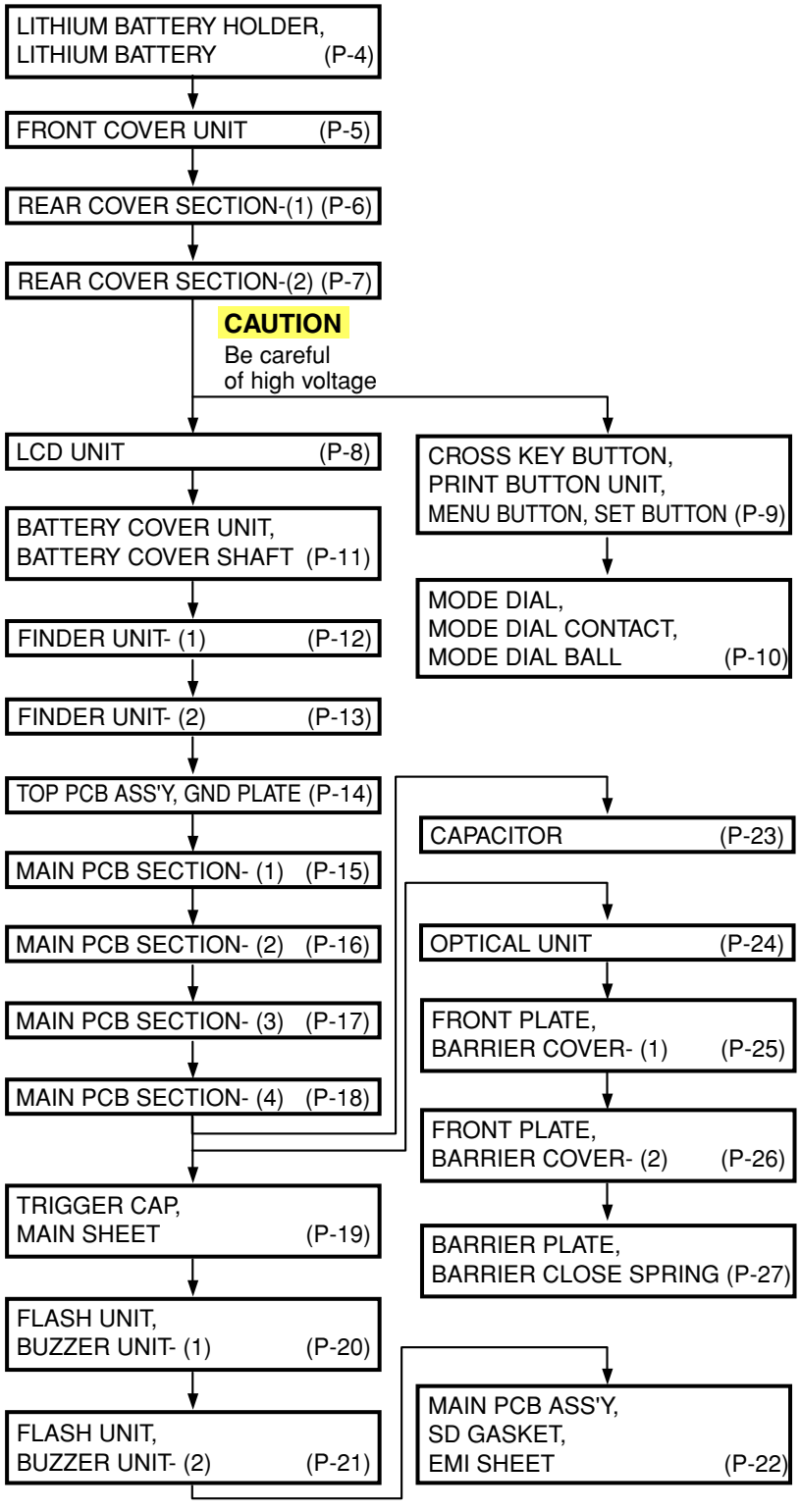

2.2 LITHIUM BATTERY HOLDER, LITHIUM BATTERY

(1) Disengage the two claws, and remove the LITHIUM BATTERY HOLDER.
(2) Remove the LITHIUM BATTERY.

NOTE (Assembly)

Be careful not to make mistake about + and - direction.

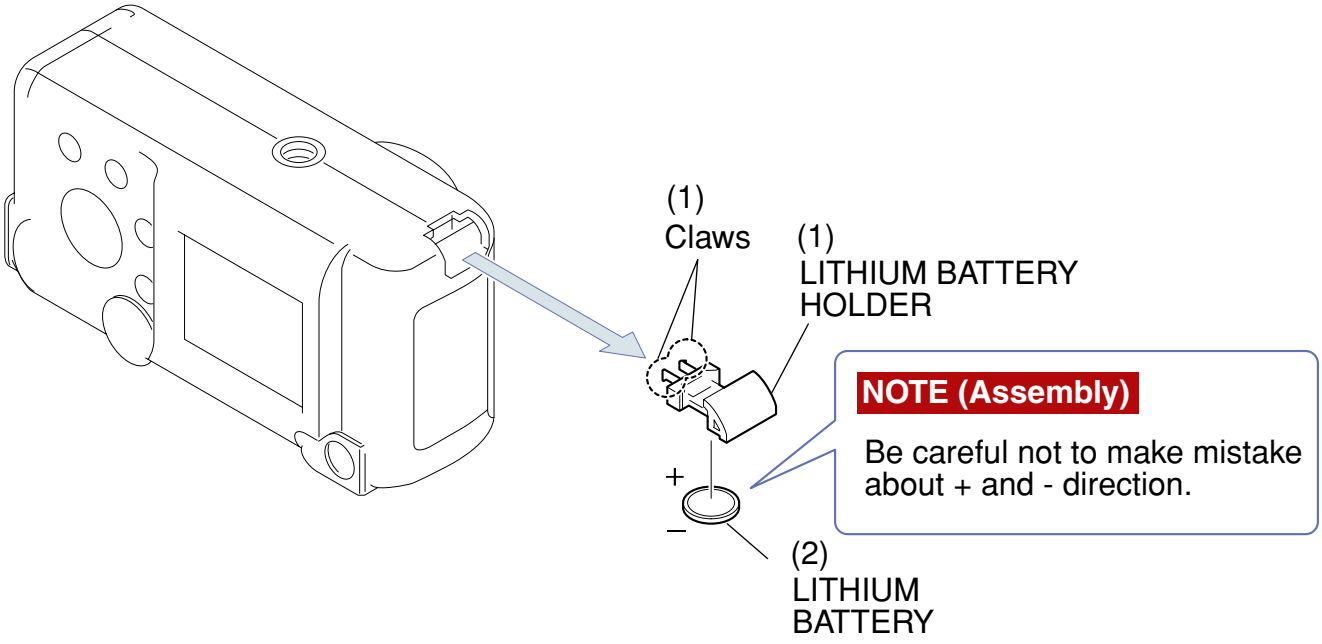

2.3 FRONT COVER UNIT

(1) Open the JACK COVER, and remove the screw ⓐ × 1.
(2) Remove the screws ⓐ × 4.
(3) Disengage the two claws, and remove the FRONT COVER UNIT.

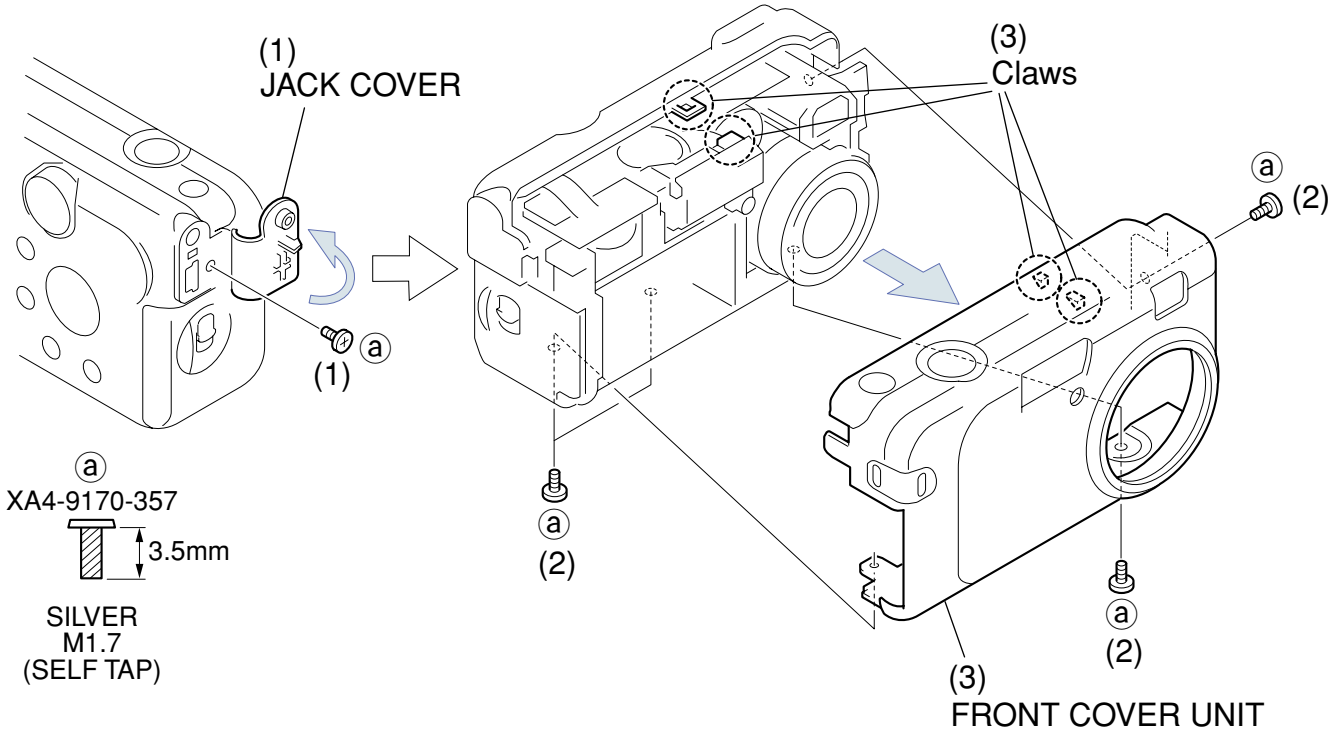

2.4 REAR COVER SECTION-(1)

(1) Remove the REAR COVER SECTION from the main unit as shown in the figure, and remove the JACK COVER.

CAUTION

Be careful not to damage the FPC boards or connectors.

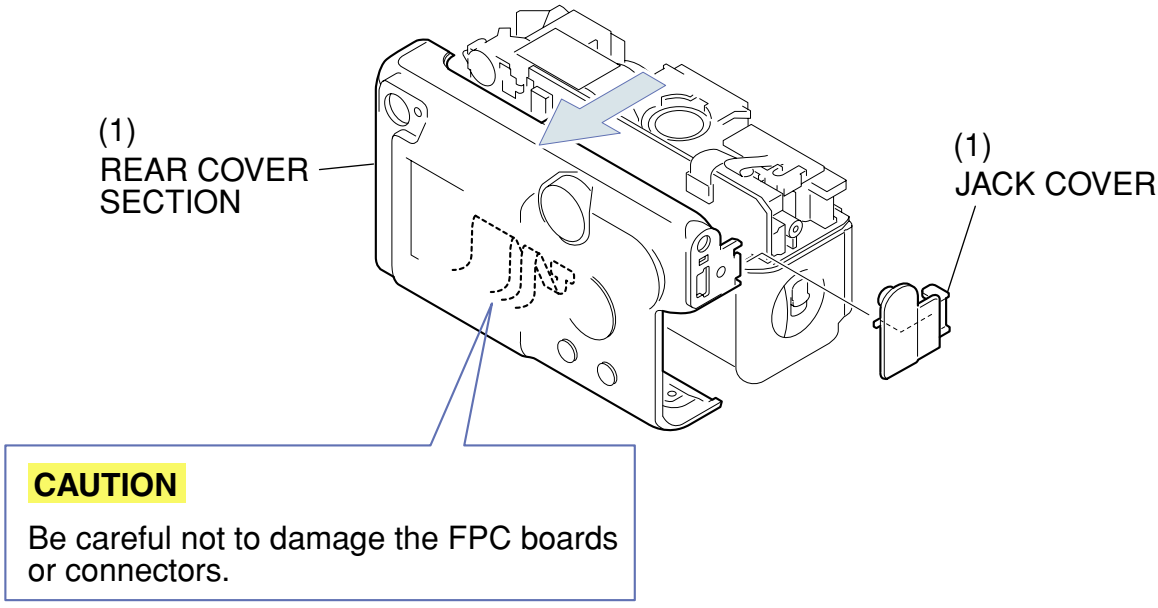

2.5 REAR COVER SECTION-(2)

(1) Disconnect the connector, and remove the soldering in three places.

(2) Disengage the two dowels of the FPC board, and remove the REAR COVER SECTION.

CAUTION

Never touch the terminals of the capacitor. Be sure to discharge the capacitor by using the discharging resistor (1kΩ, approx. 5W).

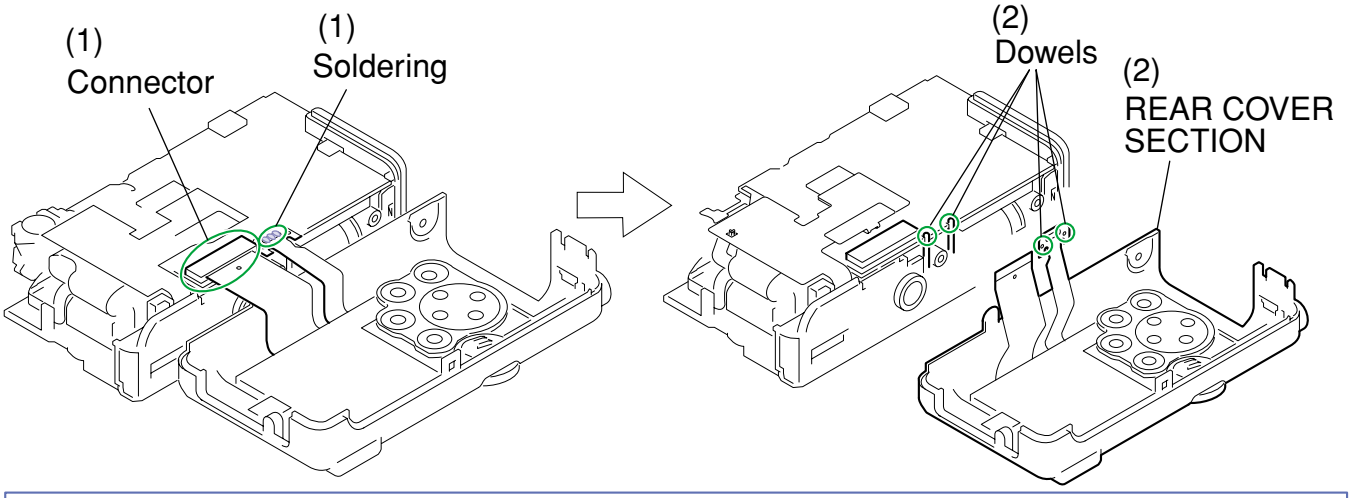

CAUTION

Discharging of the capacitor:
Never touch the terminals of the capacitor.
Be sure to discharge the capacitor by
using the discharging resistor (1kΩ, approx. 5W).

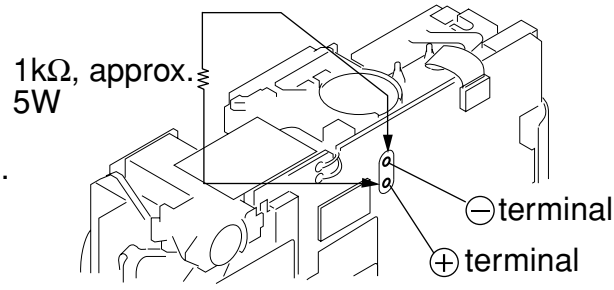

2.6 LCD UNIT

(1) Peel off the PROTECTION TAPE.

(2) Remove the screws ⓑ × 3, disengage the two positioning dowels, and remove the LCD UNIT.

NOTE (Assembly)

When the PROTECTION TAPE has lost adhesion, attach the ELECTRIC INSULATION TAPE (2 pieces) double-layered to cover the screw.

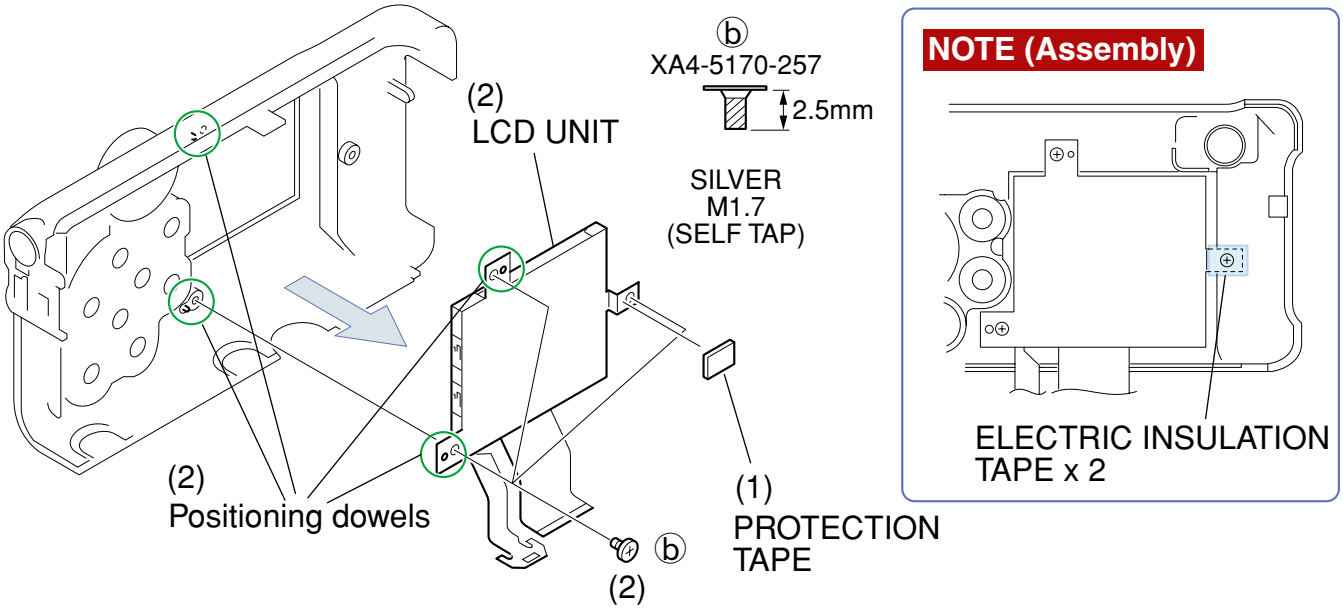

2.7 CROSS KEY BUTTON, PRINT BUTTON UNIT, MENU BUTTON, SET BUTTON

(1) Disengage the three dowels, and remove the REAR BUTTON SECTION.

(2) Remove the CROSS KEY BUTTON, the PRINT BUTTON UNIT, the SET BUTTON, and the MENU BUTTON (2 pieces) from the BUTTON BASE.

NOTE (Assembly)

Align the groove of the CROSS KEY BUTTON and the groove of the PRINT BUTTON UNIT with the two positioning dowels of the BUTTON BASE, and fix them as shown in the figure. Attach the SET BUTTON and the MENU BUTTON (2 pieces) on the BUTTON BASE as shown in the figure.

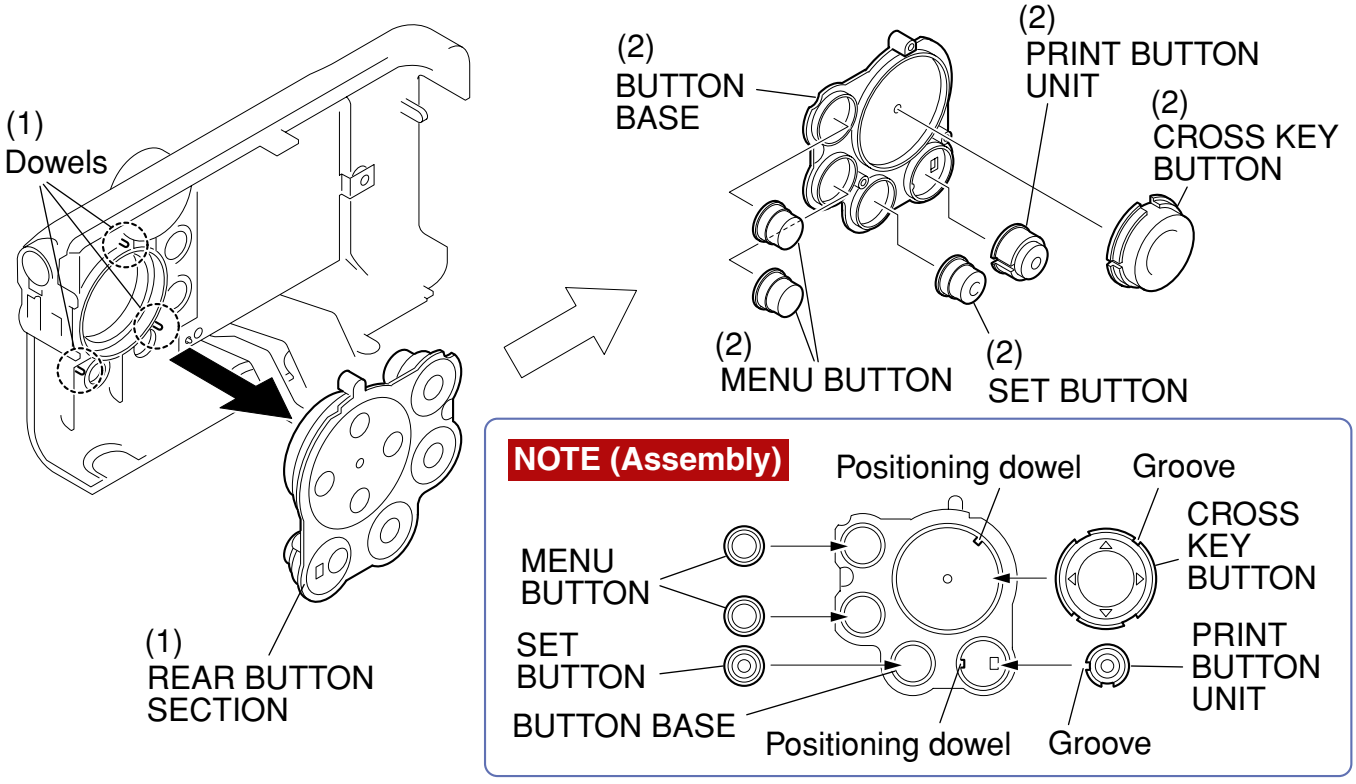

2.8 MODE DIAL, MODE DIAL CONTACT, MODE DIAL BALL

(1) Remove off the screw ⓑ × 1.

(2) Remove the MODE DIAL, the MODE DIAL CONTACT, and the MODE DIAL BALL.

CAUTION

Be careful not to drop the MODE DIAL BALL.

NOTE (Assembly)

Apply the LOGENEST RAMBDA A-74 to the positions shown in the figure.

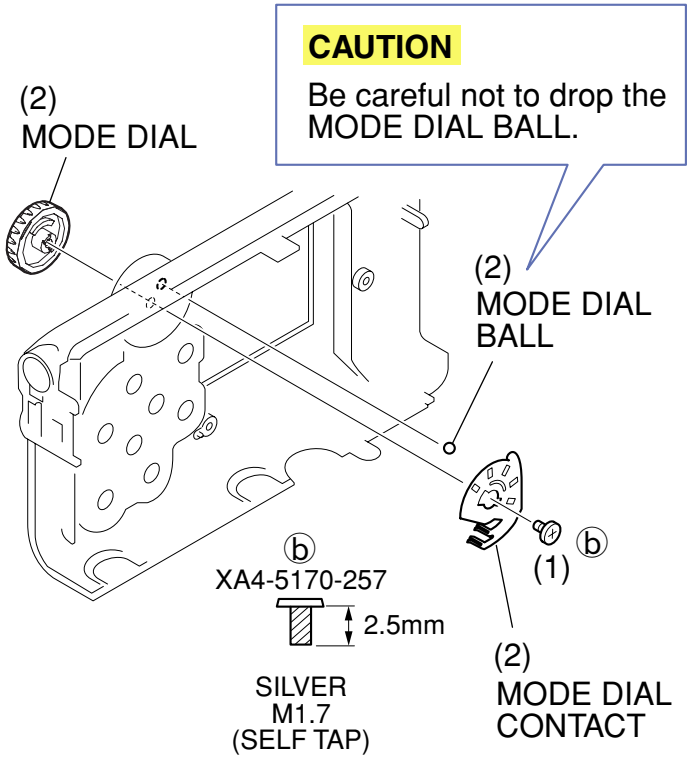

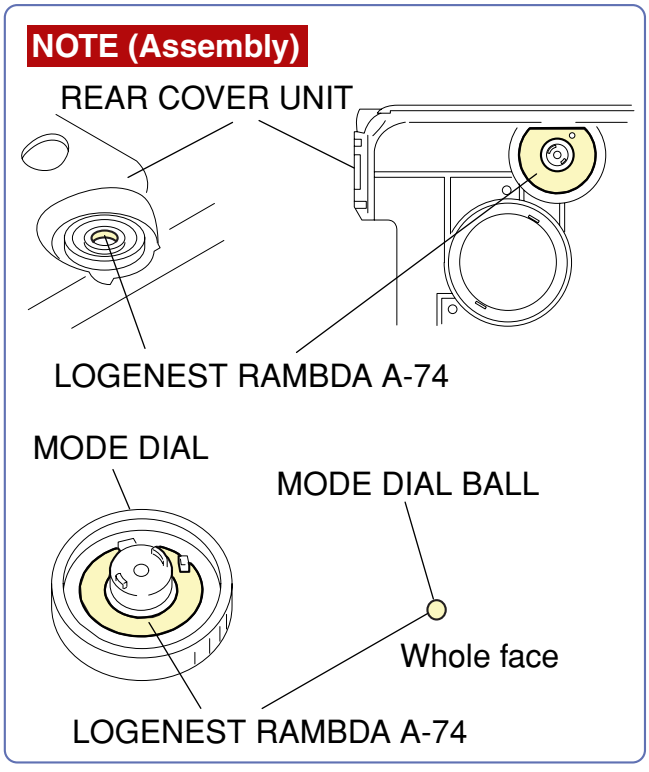

2.9 BATTERY COVER UNIT, BATTERY COVER SHAFT

(1) Peel off the SHAFT SHEET.

(2) Remove the BATTERY COVER SHAFT and the BATTERY COVER UNIT.

NOTE (Assembly)

Insert the tail of the spring of the BATTERY COVER UNIT into the hole A as shown in the figure.

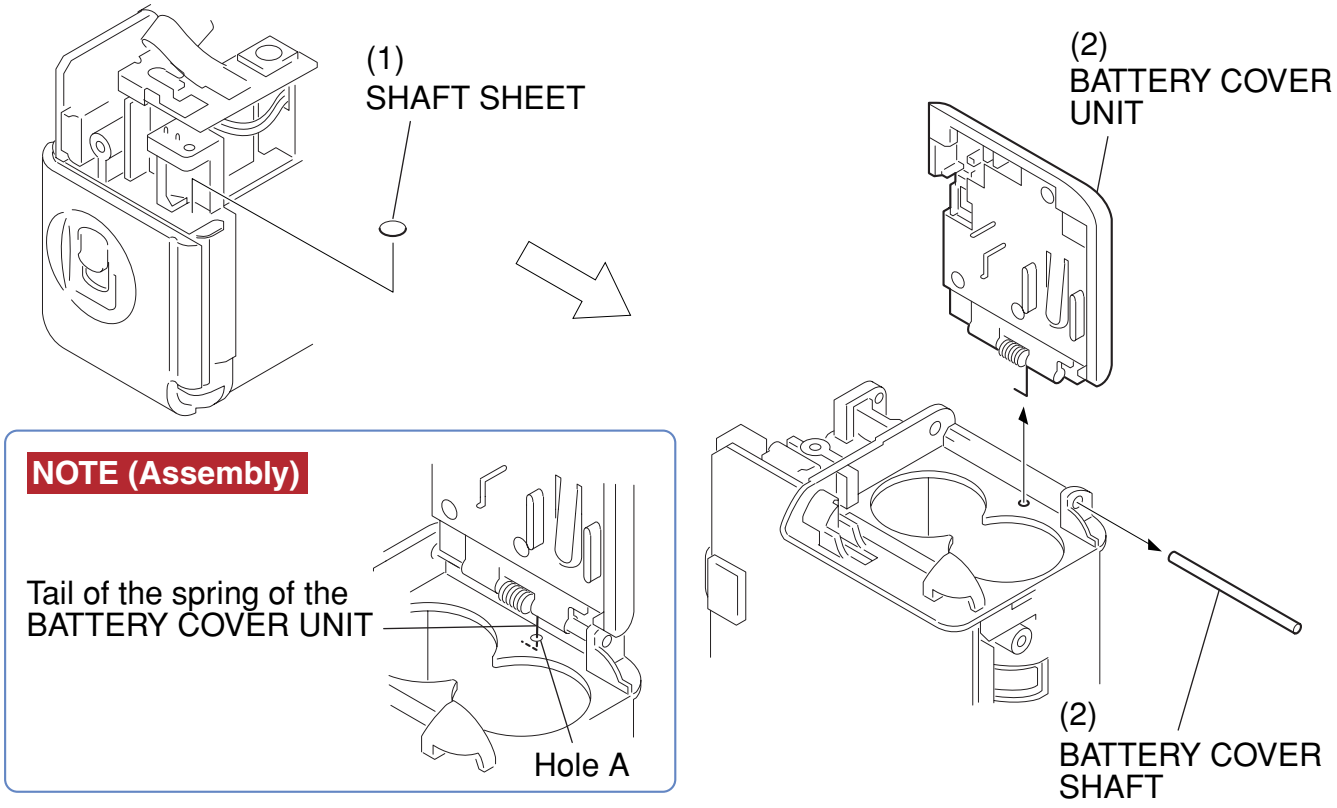

2.10 FINDER UNIT-(1)

(1) Peel off the ELECTRIC INSULATION TAPE (15mm × 20mm).

NOTE (Assembly)

Attach the ELECTRIC INSULATION TAPE (15mm × 20mm) (1 piece) at the position shown in the figure.

(2) Disengage the two dowels, and remove the LED unit.

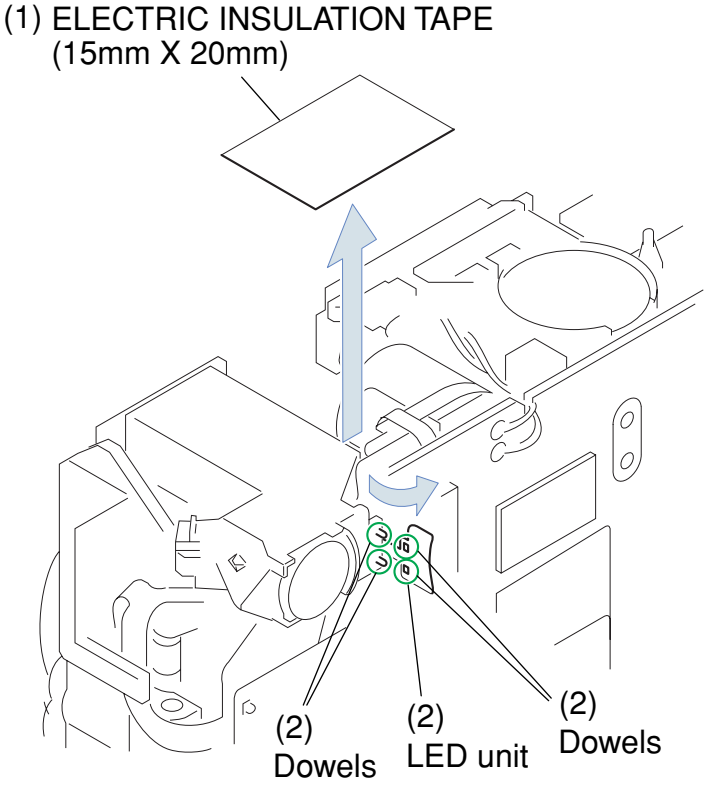

NOTE (Assembly)

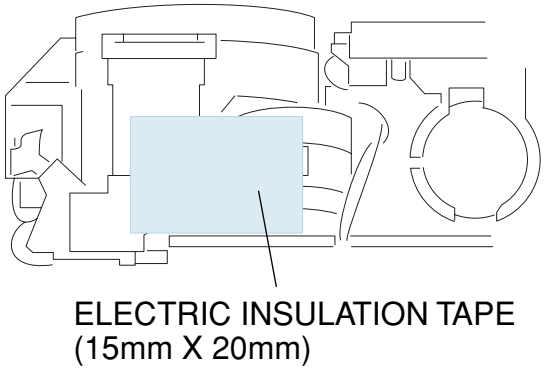

2.11 FINDER UNIT-(2)

(1) Remove the screws ⓒ × 2, disengage the three dowels, and remove the FINDER UNIT.

NOTE (Assembly)

[1] Apply the voltage (DC 2.0V) across the motor terminal to drive the motor until the motor stops and the barrel fully comes out.

[2] Move the lens of the FINDER UNIT forward until it stops.
Install the FINDER UNIT to the main unit by engaging the front dowel first.

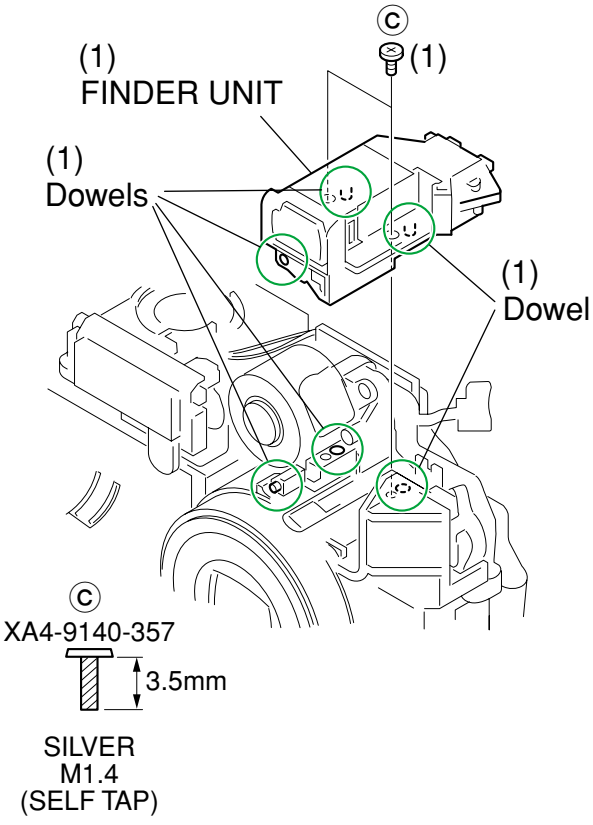

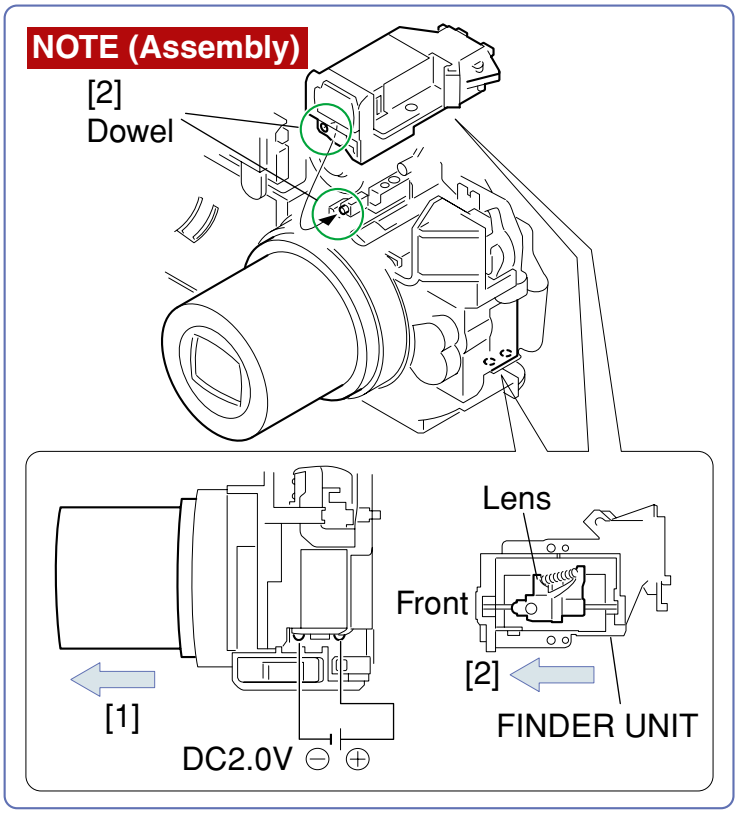

2.12 TOP PCB ASS'Y GND PLATE

(1) Disconnect the connector, and remove the screw ⓓ × 1.

(2) Remove the GND PLATE, disengage the two dowels, and remove the TOP PCB ASS'Y.

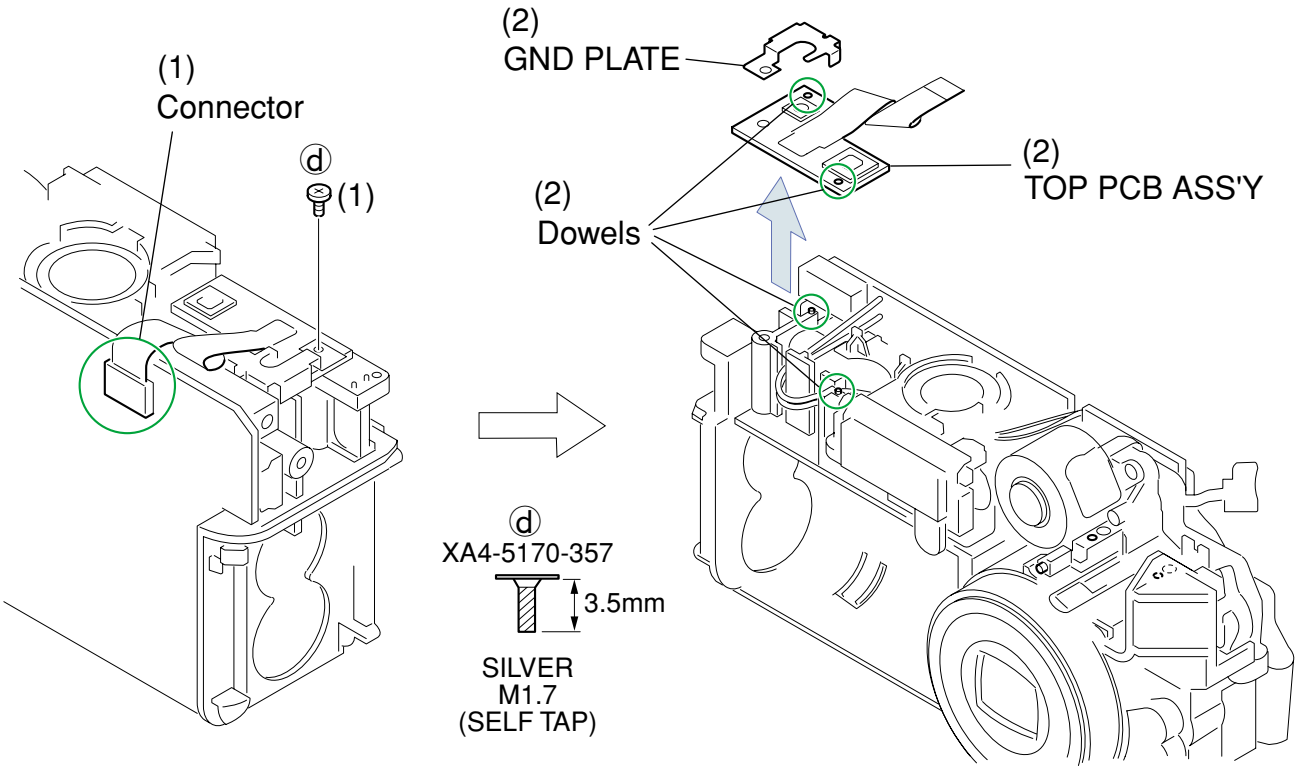

2.13 MAIN PCB SECTION-(1)

(1) Peel off the MAIN SHEET from the adherent area in the direction of the arrow, and remove the soldering in one place.

(2) Disengage the dowel, and peel off the MAIN SHEET from the adherent area as shown in the figure.

NOTE (Assembly)

Attach the DOUBLE-SIDED TAPE (16mm × 8mm) (1 piece) at the position shown in the figure. Bend the MAIN SHEET as shown in the figure, and fold the portion A to attach it to the adherent area.

(3) Disconnect the two connectors.

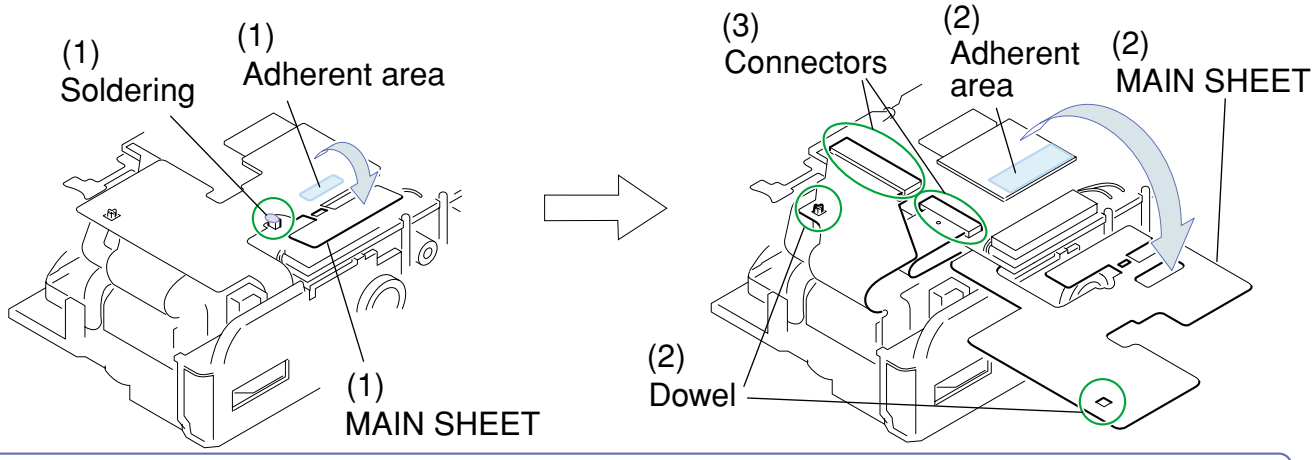

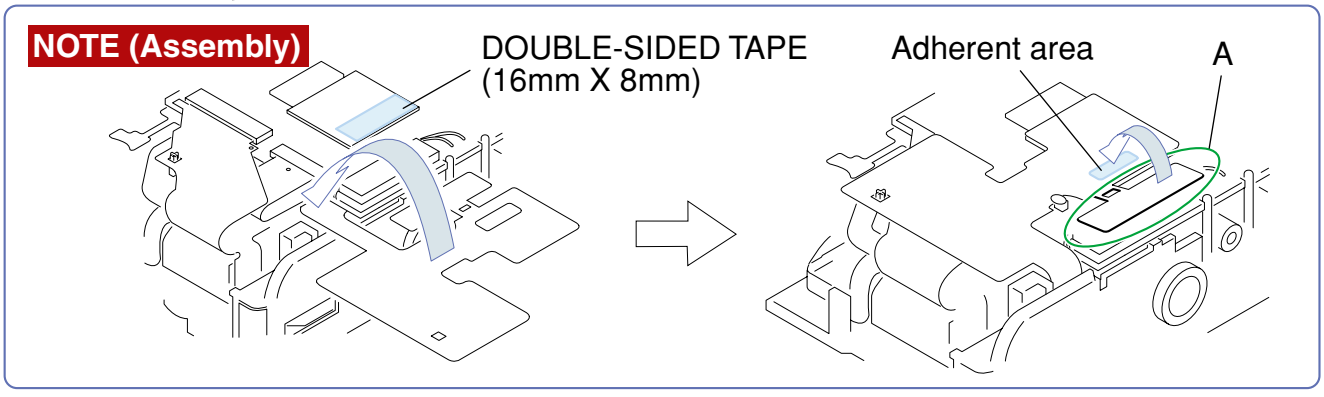

2.14 MAIN PCB SECTION-(2)

(1) Remove the DIA BOND , and then remove the soldering in eight places.

(2) Remove the lead wires from the groove of the MAIN PCB ASS'Y.

NOTE (Assembly)

Solder each lead wire as shown in the figure. Apply the DIA BOND No.1663G to the position shown in the figure.

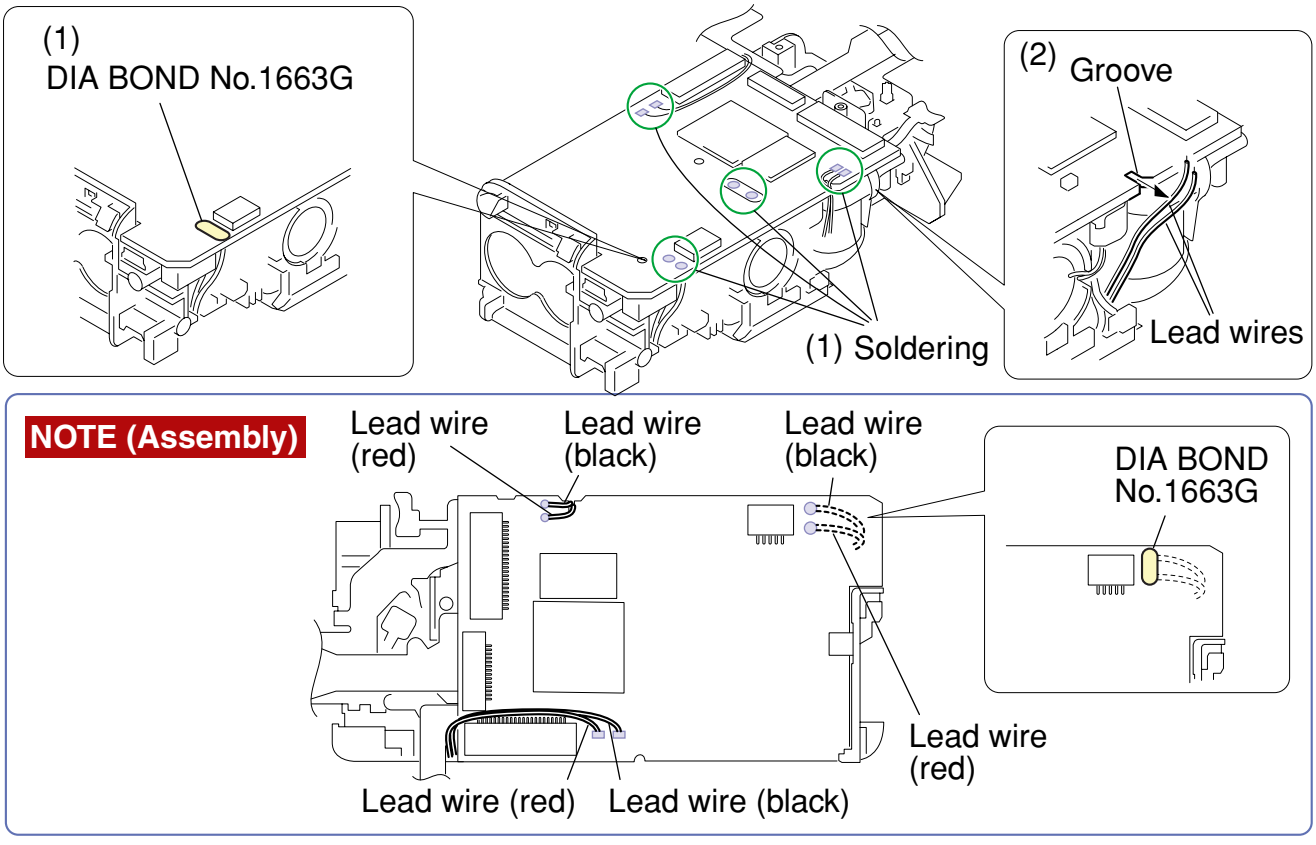

2.15 MAIN PCB SECTION-(3)

(1) Remove the screws ⓓ × 2.

(2) Remove the lead wires from the two holes and from the two grooves, and remove the screw ⓓ × 1.

NOTE (Assembly)

Insert the two lead wires (black and red) into the two holes as shown in the figure. (Hole A → black, Hole B → red)

Route the two lead wires through the two grooves as shown in the figure.

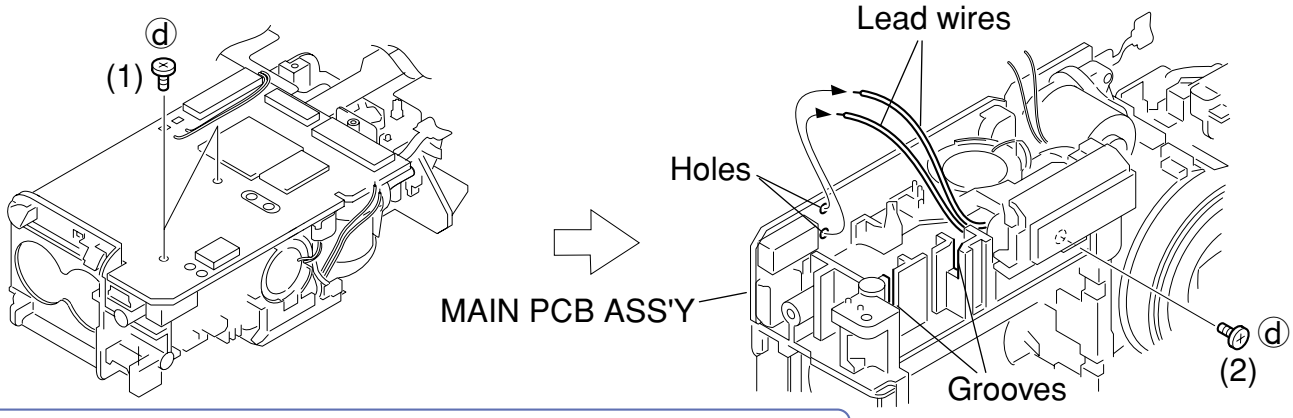

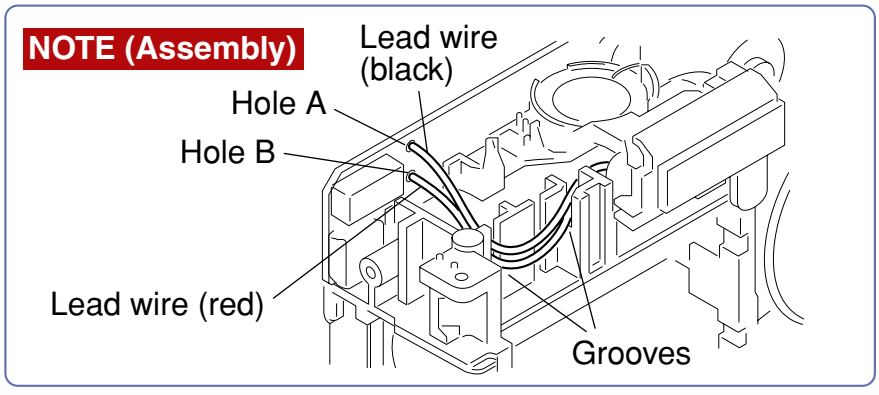

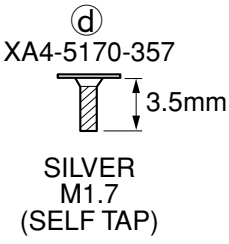

2.16 MAIN PCB SECTION-(4)

(1) Raise the FINDER UNIT to remove it from the adherent area of the capacitor and to disengage the hook.

(2) Disengage the five dowels and the hook, and remove the MAIN PCB SECTION (while avoiding the switch unit).

CAUTION

Be careful not to damage the switch unit.

Be sure that the soldered portions do not pull up the leads of the capacitor.

NOTE (Assembly)

Attach the DOUBLE-SIDED TAPE (5mm × 5mm) (1 piece) at the position shown in the figure.

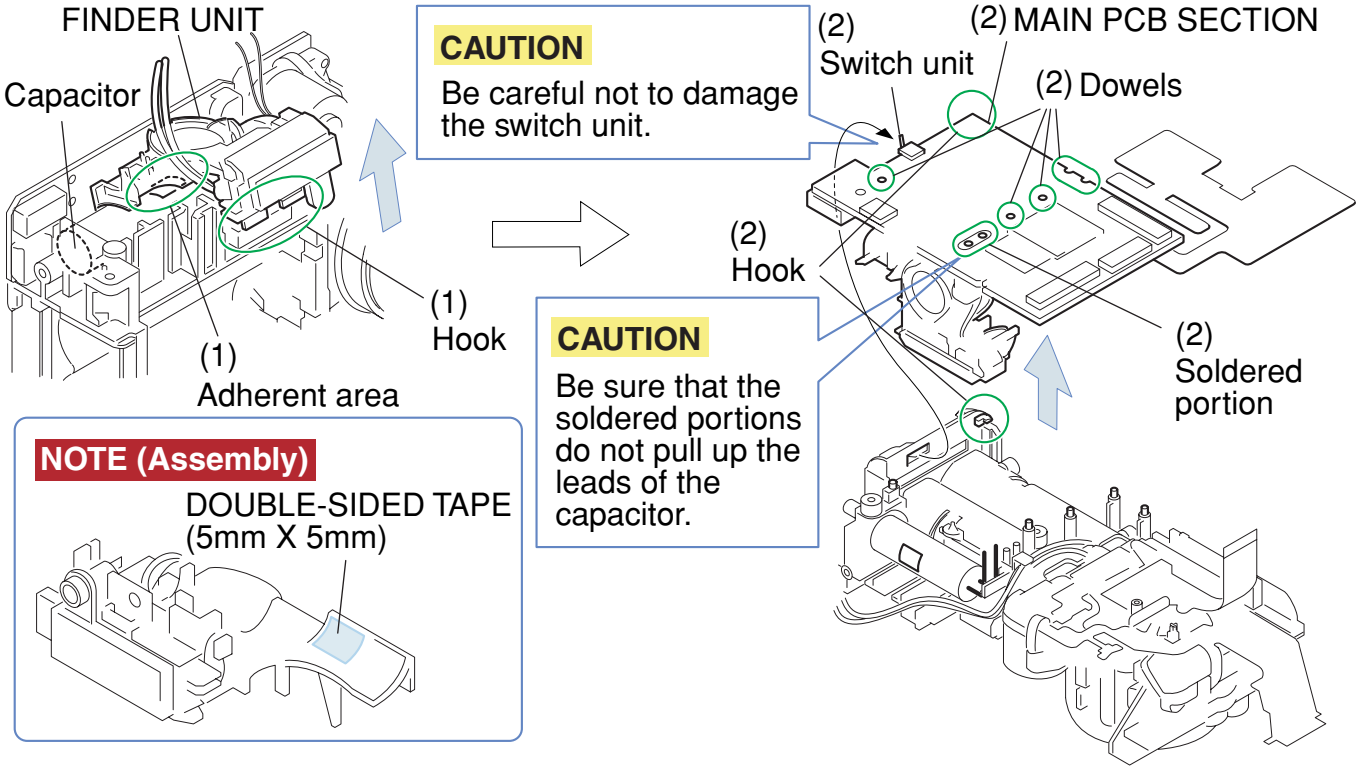

2.17 TRIGGER CAP, MAIN SHEET

(1) Remove the TRIGGER CAP from the MAIN PCB ASS'Y.

NOTE1 (Assembly)

Insert the lead wire through the TRIGGER CAP opening, and then attach the TRIGGER CAP.

(2) Peel off the MAIN SHEET.

NOTE2 (Assembly)

Attach the DOUBLE-SIDED TAPE (8mm × 15mm) (1 piece) at the position shown in the figure, and attach the MAIN SHEET by aligning its holes with the element IC1000 and the element T500.

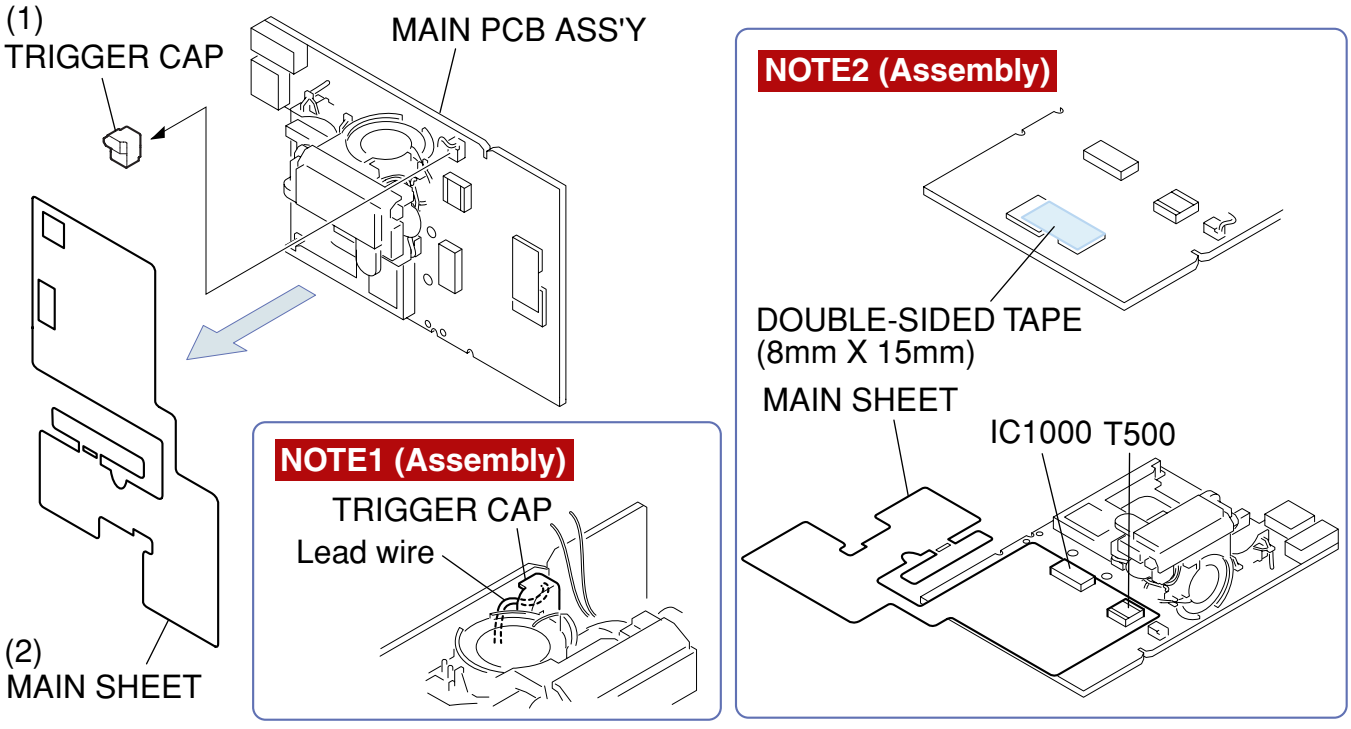

2.18 FLASH UNIT, BUZZER UNIT-(1)

(1) Remove the soldering in five places.

(2) Remove the lead wires from the adherent area, and remove the FLASH UNIT and the BUZZER UNIT together as an assembled unit.

NOTE (Assembly)

Solder each lead wire as shown in the figure.

Attach the DOUBLE-SIDED TAPE (5mm × 10mm) (1 piece) between the two ICs to fix the lead wires.

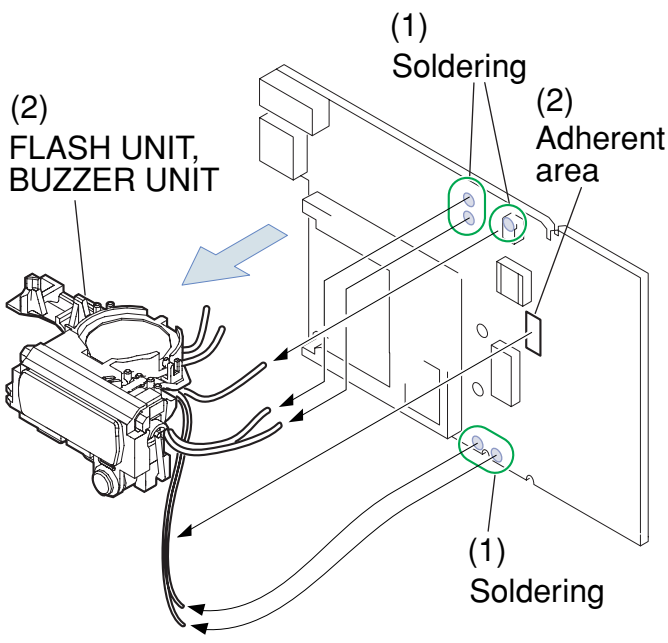

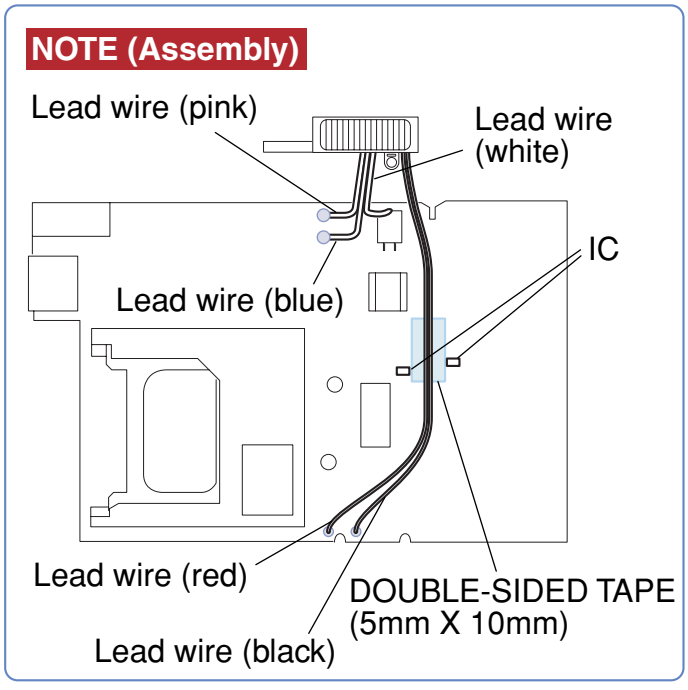

2.19 FLASH UNIT, BUZZER UNIT-(2)

(1) Remove the lead wires from the groove.

NOTE1 (Assembly)

Secure the lead wires in the groove as shown in the figure.

(2) Remove the three DIA BOND-adherent areas, and separate the FLASH UNIT and the BUZZER UNIT.

NOTE2 (Assembly)

Apply the DIA BOND No.1663G to the positions shown in the figure.

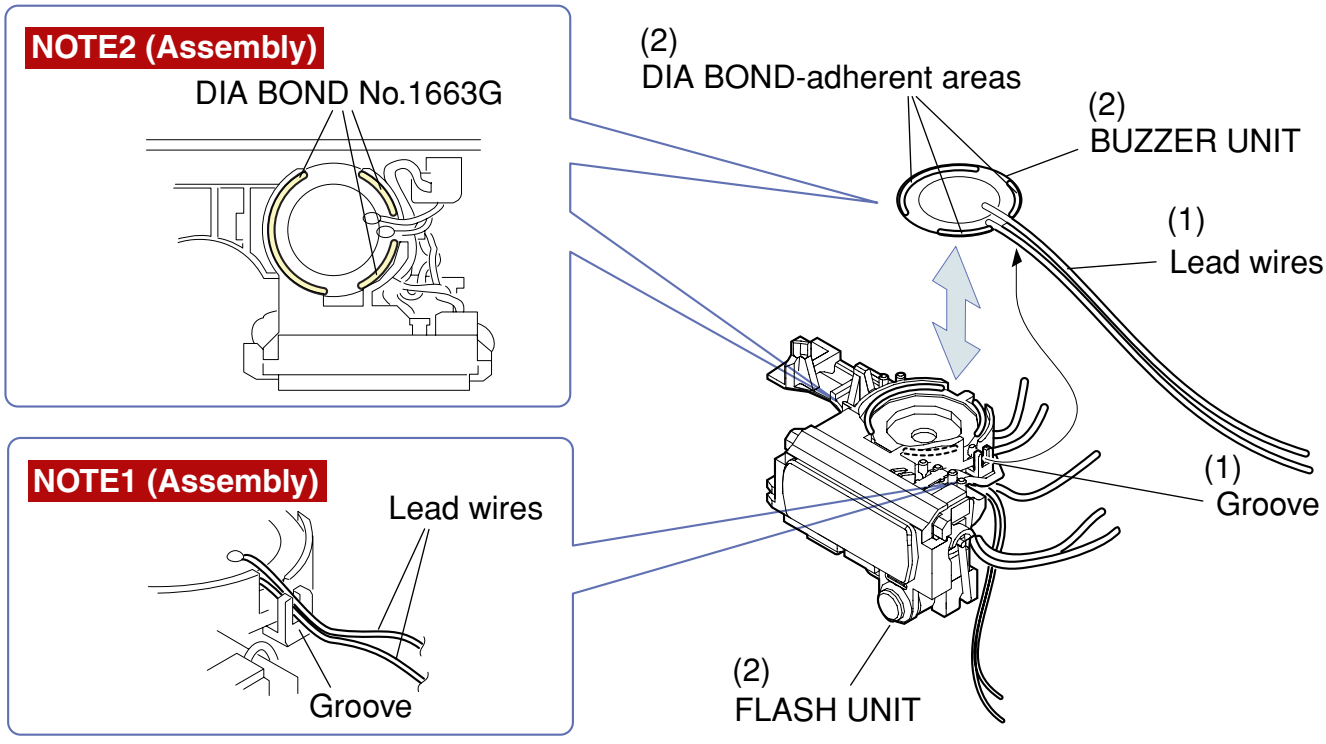

2.20 MAIN PCB ASS'Y, SD GASKET, EMI SHEET

(1) Peel off the EMI SHEET from the MAIN PCB ASS'Y.

NOTE1 (Assembly)

Attach the EMI SHEET at the position shown in the figure.

(2) Remove the SD GASKET from the bottom of the SD connector of the MAIN PCB ASS'Y.

NOTE2 (Assembly)

Insert the SD GASKET while pressing in the direction of the arrow, making sure that it does not protrude from the SD connector.

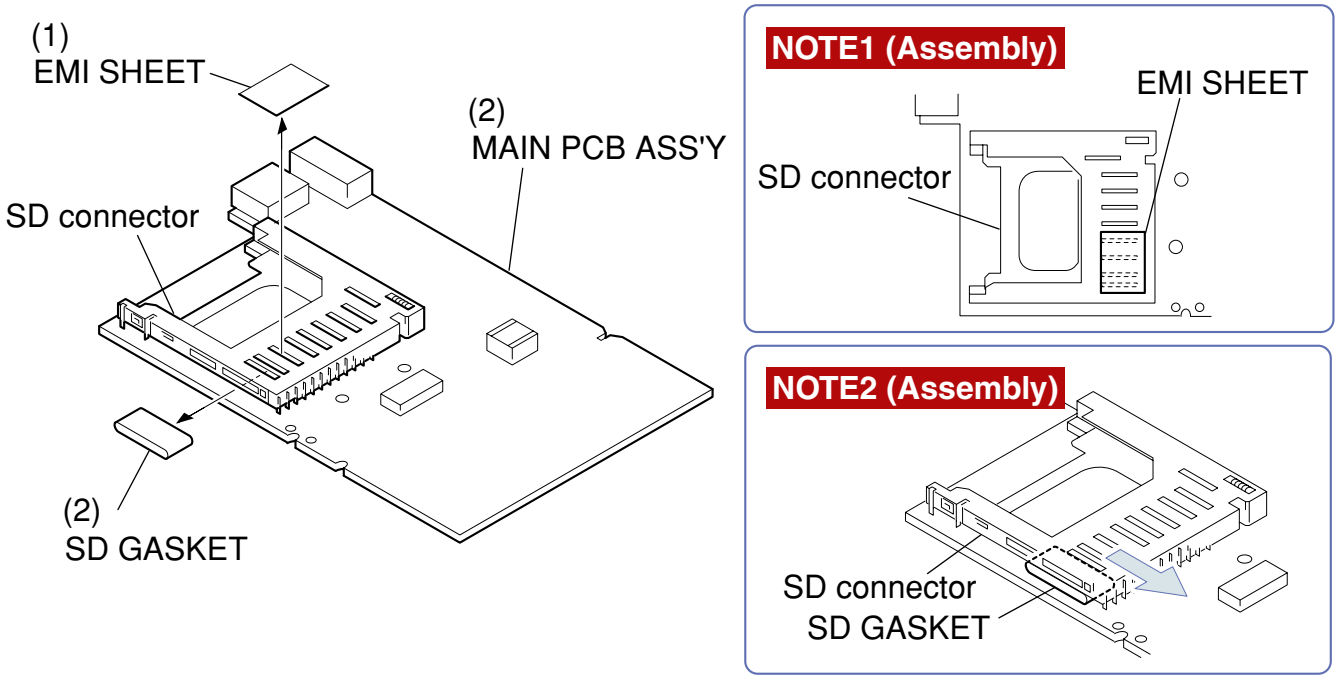

2.21 CAPACITOR

(1) Remove the CAPACITOR.

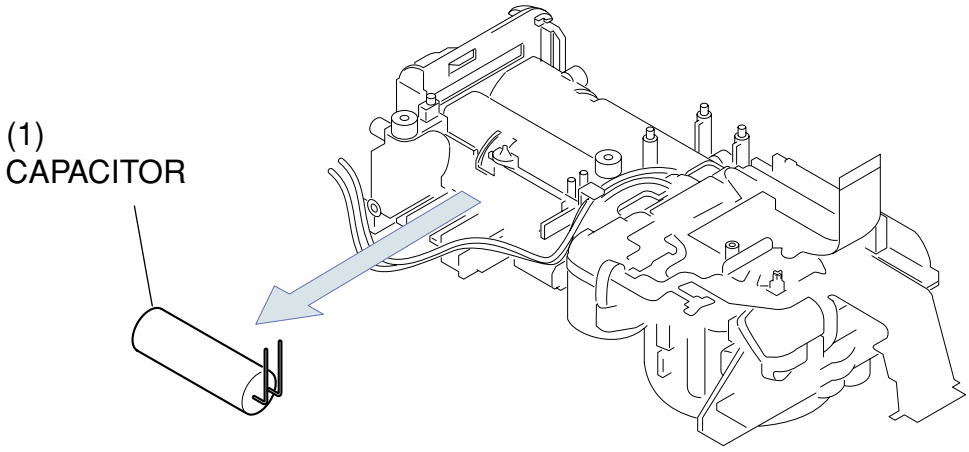

2.22 OPTICAL UNIT

(1) Peel off the ELECTRIC INSULATION TAPE (20mm × 30mm).

NOTE1 (Assembly)

Attach the ELECTRIC INSULATION TAPE (20mm × 30mm) (1 piece) at the position shown in the figure.

(2) Remove the screws ⓔ × 3, disengage the two dowels, and remove the OPTICAL UNIT.

NOTE2 (Assembly)

Route the lead wires as shown in the figure.

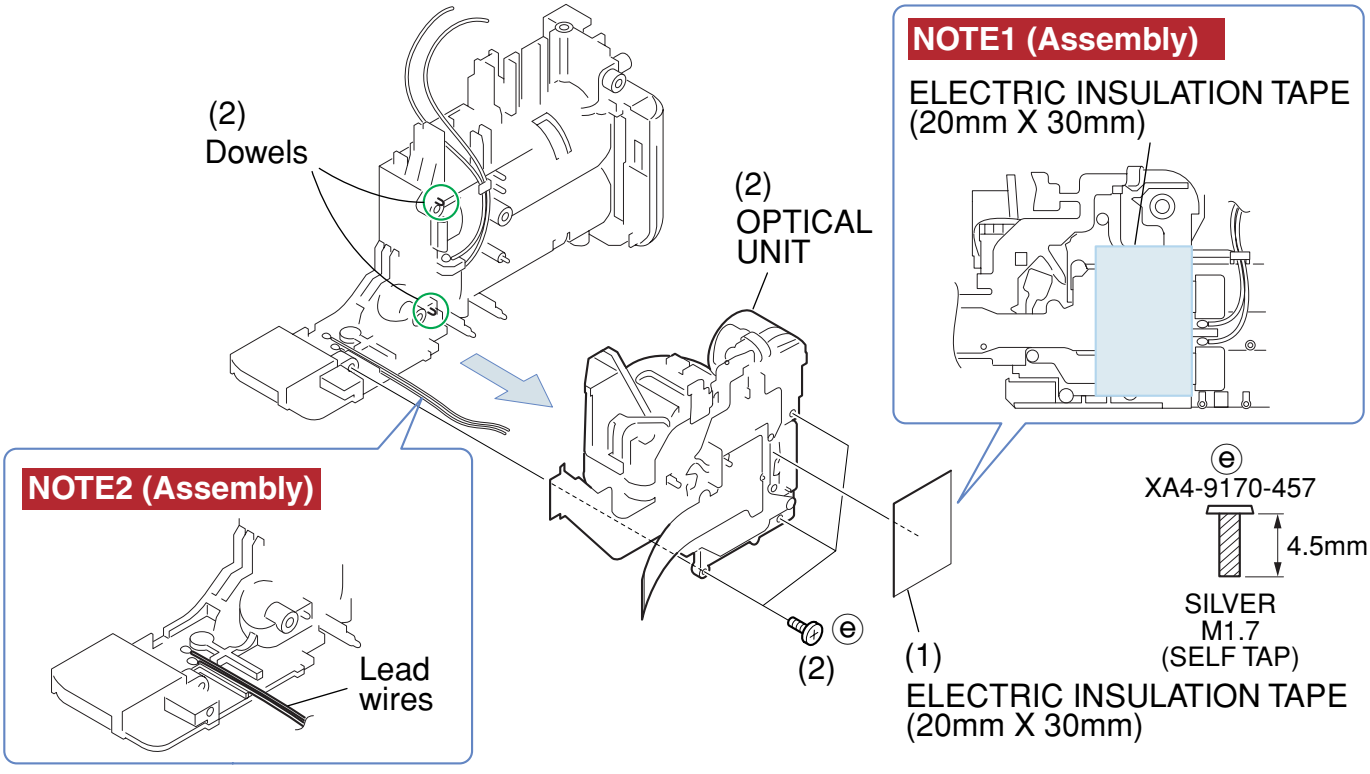

2.23 FRONT PLATE, BARRIER COVER-(1)

(1) Apply the voltage (DC 2.0V) across the motor terminal to drive the motor until the motor stops and the barrel fully comes out.

(2) Insert the tweezers into the FRONT PLATE as shown in the figure, disengage the two claws, and remove the FRONT PLATE, BARRIER COVER, and the FRONT PLATE TAPE together as an assembled unit.

CAUTION

Be careful not to drop the BARRIER PLATE.

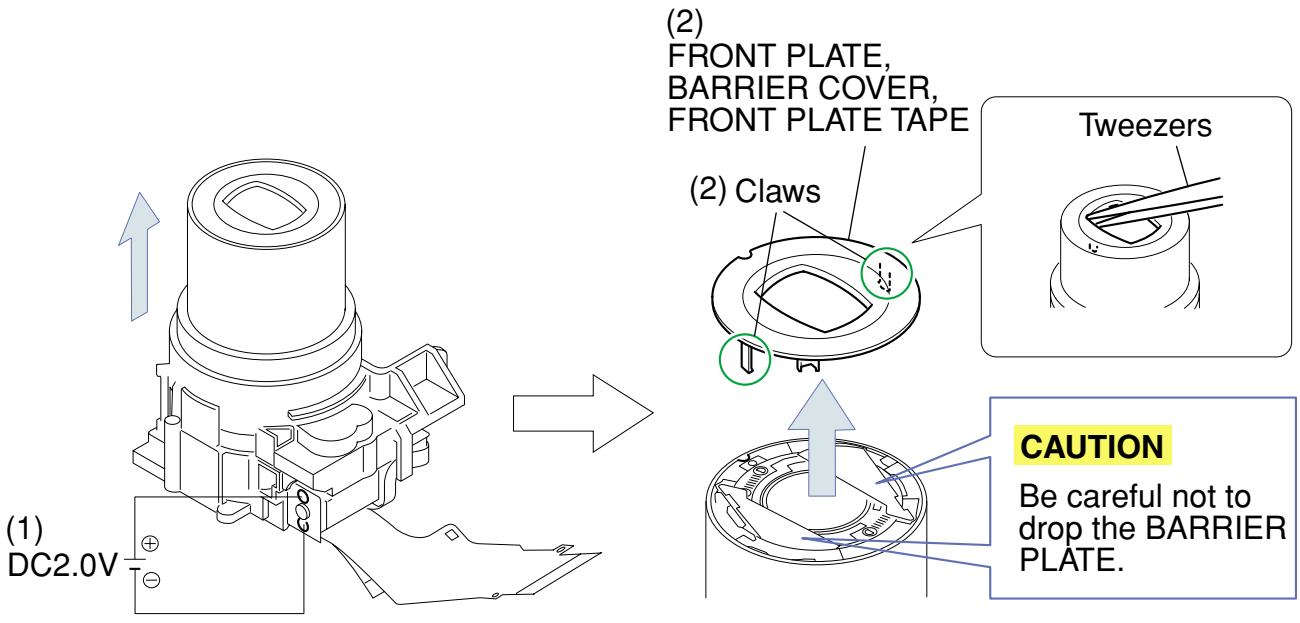

2.24 FRONT PLATE, BARRIER COVER-(2)

(1) Separate the FRONT PLATE and the BARRIER COVER, which are fixed together with the FRONT PLATE TAPE.

NOTE (Assembly)

Install the BARRIER COVER to the OPTICAL UNIT, apply the DIA BOND No.1663G at the position shown in the figure, and then attach the FRONT CAP TAPE and the FRONT PLATE in this order.

Be sure to align the positioning dowel when attaching the FRONT PLATE.

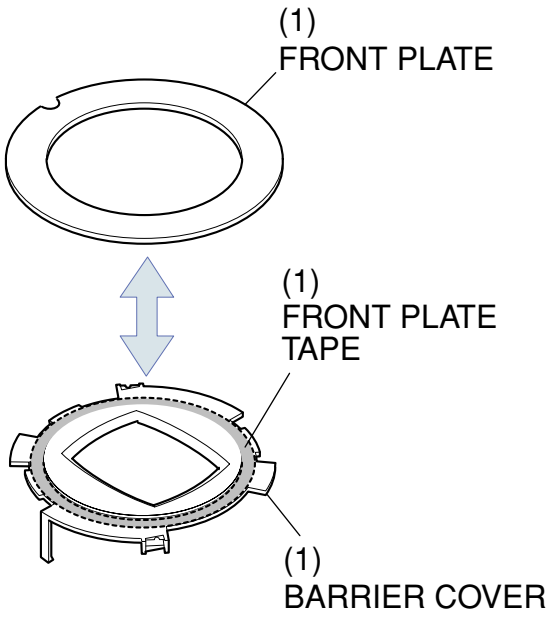

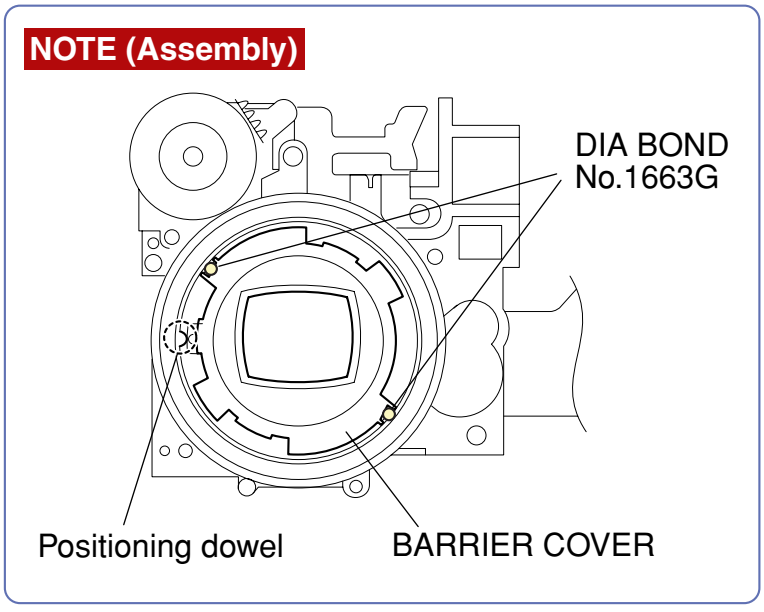

2.25 BARRIER PLATE, BARRIER CLOSE SPRING

(1) Remove the BARRIER PLATE (2 pieces).
(2) Remove the BARRIER CLOSE SPRING (2 pieces).

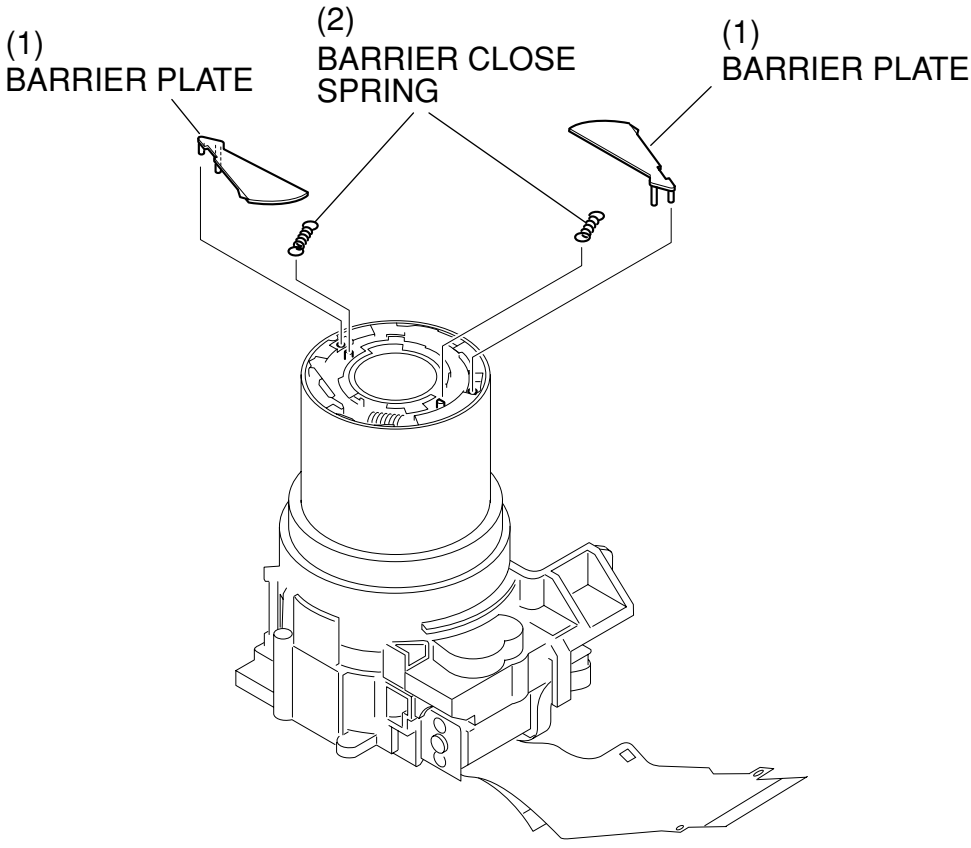
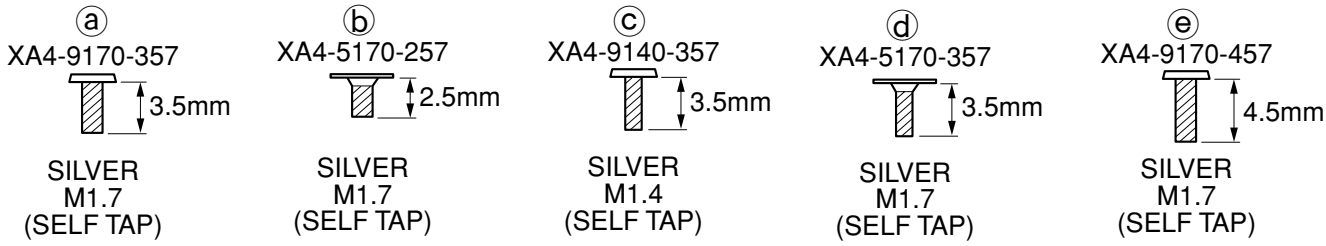
2.26 Screw List