ORDER NO. KM40901804CE
F1

Service Manual

Telephone Equipment

Call Display Compatible

DECT 6.0

Model No. KX-TG6411CT
KX-TG6412CS
KX-TG6413CT
KX-TG6414CT
KX-TGA641CS
KX-TGA641CT

Expandable Digital Cordless Phone

S: Pearl Silver Version
T: Black Metallic Version
(for Canada)

KX-TGA641CS/T
(Handset)

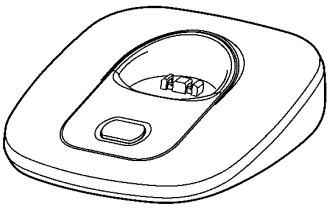

KX-TG6411CS/T
(Base Unit)

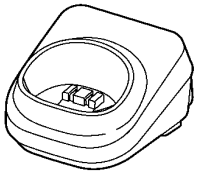

(Charger Unit)

Configuration for each model

Model No	Base Unit	Handset	Charger Unit	Expandable
KX-TG6411	1 (TG6411)	1 (TGA641)		Up to 6
KX-TG6412	1 (TG6411)	2 (TGA641)	1	Up to 6
KX-TG6413	1 (TG6411)	3 (TGA641)	2	Up to 6
KX-TG6414	1 (TG6411)	4 (TGA641)	3	Up to 6

* For the optional accessory (KX-TGA641), refer to KX-TG6431/32/33/34 service manual.

Panasonic®

© Panasonic Communications Co., Ltd. 2009. Unauthorized copying and distribution is a violation of law.

⚠ WARNING

This service information is designed for experienced repair technicians only and is not designed for use by the general public. It does not contain warnings or cautions to advise non-technical individuals of potential dangers in attempting to service a product. Products powered by electricity should be serviced or repaired only by experienced professional technicians. Any attempt to service or repair the product or products dealt with in this service information by anyone else could result in serious injury or death.

IMPORTANT SAFETY NOTICE

There are special components used in this equipment which are important for safety. These parts are marked by ⚠ in the Schematic Diagrams, Circuit Board Diagrams, Exploded Views and Replacement Parts List. It is essential that these critical parts should be replaced with manufacturer's specified parts to prevent shock, fire or other hazards. Do not modify the original design without permission of manufacturer.

IMPORTANT INFORMATION ABOUT LEAD FREE, (PbF), SOLDERING

If lead free solder was used in the manufacture of this product, the printed circuit boards will be marked PbF. Standard leaded, (Pb), solder can be used as usual on boards without the PbF mark.
When this mark does appear, please read and follow the special instructions described in this manual on the use of PbF and how it might be permissible to use Pb solder during service and repair work.

- When you note the serial number, write down all 11 digits. The serial number may be found on the bottom of the unit.
- The illustrations in this Service Manual may vary slightly from the actual product.

Note for TABLE OF CONTENTS:
Because sections 4, 5 and 6 of this manual are extracts from the operating instructions for this model, they are subject to change without notice. You can download and refer to the original operating instructions on TSN Server for further information.

TABLE OF CONTENTS

PAGE

1 Safety Precautions ---------- 4
1.1. For Service Technicians ---------- 4
2 Warning ---------- 4
2.1. Battery Caution ---------- 4
3 Specifications ---------- 5
4 Location of Controls and Components ---------- 6
4.1. Controls ---------- 6
4.2. Display ---------- 6
5 Installation Instructions ---------- 7
5.1. Connections ---------- 7
5.2. Battery ---------- 7
6 Operating Instructions ---------- 9
6.1. Programmable Settings ---------- 9
6.2. Error Messages ---------- 12
6.3. Troubleshooting ---------- 13
7 Schematic Diagram ---------- 15
7.1. For Schematic Diagram ---------- 15
7.2. Schematic Diagram (Base Unit_Main) ---------- 16
7.3. Schematic Diagram (Base Unit_RF Part) ---------- 18
7.4. Schematic Diagram (Handset_Main) ---------- 20
7.5. Schematic Diagram (Handset_RF Part) ---------- 22
7.6. Schematic Diagram (Charger Unit) ---------- 24
8 Exploded View and Replacement Parts List ---------- 25

1 Safety Precautions

1.1. For Service Technicians

- **Repair service shall be provided in accordance with repair technology information such as service manual so as to prevent fires, injury or electric shock, which can be caused by improper repair work**.
  1. When repair services are provided, neither the products nor their parts or members shall be remodeled.
  2. If a lead wire assembly is supplied as a repair part, the lead wire assembly shall be replaced.
  3. FASTON terminals shall be plugged straight in and unplugged straight out.

- **ICs and LSIs are vulnerable to static electricity.**
  When repairing, the following precautions will help prevent recurring malfunctions.
  1. Cover plastic parts boxes with aluminum foil.
  2. Ground the soldering irons.
  3. Use a conductive mat on worktable.
  4. Do not grasp IC or LSI pins with bare fingers.

2 Warning

2.1. Battery Caution

Risk of explosion if battery is replaced by an incorrect type. Dispose of used batteries according to the instructions.

IL Y A RISQUE D'EXPLOSION SI LA BATTERIE EST REMPLACÉE PAR UNE BATTERIE DE TYPE INCORRECT.METTRE AU REBUT LES BATTERIES USAGÉES CONFORMÉMENT AUX INSTRUCTIONS

3 Specifications

■ **Standard:**
DECT 6.0 (Digital Enhanced Cordless Telecommunications 6.0)

■ **Number of channels:**
60 Duplex Channels

■ **Frequency range:**
1.92 GHz to 1.93 GHz

■ **Duplex procedure:**
TDMA (Time Division Multiple Access)

■ **Channel spacing:**
1,728 kHz

■ **Bit rate:**
1,152 kbit/s

■ **Modulation:**
GFSK (Gaussian Frequency Shift Keying)

■ **RF transmission power:**
115 mW (Max.)

■ **Voice coding:**
ADPCM 32 kbit/s

	Base Unit	Handset	Charger
Power source	AC Adaptor (PQLV219Z, 120 V AC, 60 Hz)	Rechargeable Ni-MH battery AAA (R03) size (1.2 V 630 mAh)	AC Adaptor (PQLV219Z, 120 V AC, 60 Hz)
Receiving Method	Super Heterodyne	Super Heterodyne	—
Oscillation Method	PLL synthesizer	PLL synthesizer	—
Detecting Method	Quadrature Discriminator	Quadrature Discriminator	—
Tolerance of OSC Frequency	13.824 MHz ±100 Hz	13.824 MHz ±100 Hz	—
Modulation Method	Frequency Modulation	Frequency Modulation	—
ID Code	40 bit	40 bit	—
Ringer Equivalence No. (REN)	0.1	—	—
Dialing Mode	—	Tone (DTMF)/Pulse	—
Redial	—	Up to 48 digits	—
Speed Dialer	—	Up to 32 digits (Phonebook)	—
Power Consumption	Standby: Approx. 1.1 W Maximum: Approx. 4.4W	11 days at Standby, 5 hours at Talk	Standby: Approx. 0.1 W Maximum: Approx. 2.6 W
Operating Conditions	0 ˚C - 40 ˚C (32 ˚F - 104 ˚F) 20 % – 80 % relative air humidity (dry)	0 ˚C - 40 ˚C (32 ˚F - 104 ˚F) 20 % – 80 % relative air humidity (dry)	0 ˚C - 40 ˚C (32 ˚F - 104 ˚F) 20 % – 80 % relative air humidity (dry)
Dimensions (H x W x D)	Approx. 54 mm x 126 mm x 126 mm	Approx. 158 mm x 48 mm x 32 mm	Approx. 52 mm x 75 mm x 87 mm
Mass (Weight)	Approx. 140 g	Approx. 130 g	Approx. 60 g

Note:
- Design and specifications are subject to change without notice.

Note for Service:
- **Optional headset:** RP-TCA86, RP-TCA94, RP-TCA95
- **Operation range:** Up to 300 m outdoors, Up to 50 m indoors, depending on the condition.
- **Analog telephone connection:** Telephone Line

4 Location of Controls and Components

4.1. Controls

4.1.1. Base Unit

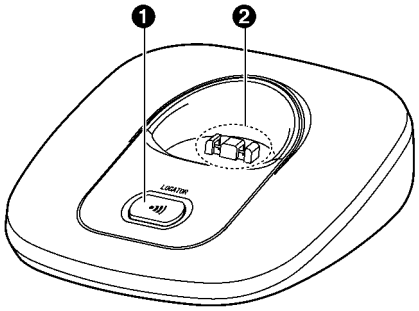

❶ 【LOCATOR】
❷ Charge contacts

4.1.2. Handset

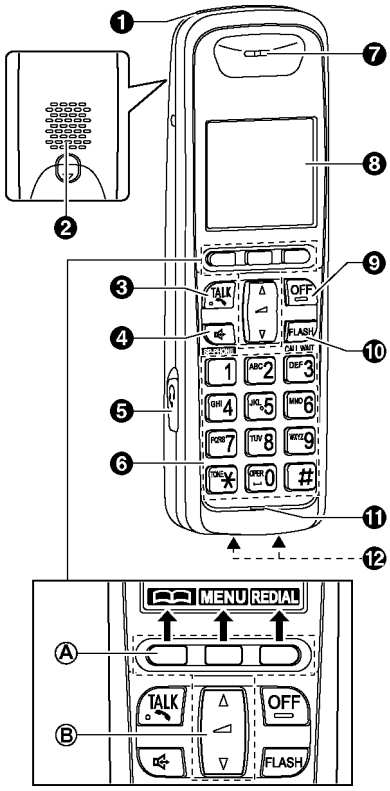

❶ Charge indicator
Ringer indicator
Message indicator
❷ Speaker
❸ 【 】(TALK)
❹ 【 】(SP-PHONE: Speakerphone)
❺ Headset jack
❻ Dial keypad (【✱】: TONE)
❼ Receiver
❽ Display
❾ 【OFF】
❿ 【FLASH】【CALL WAIT】
⓫ Microphone
⓬ Charge contacts

Control type

Ⓐ Soft keys

The handset features 3 soft keys. By pressing a soft key, you can select the feature shown directly above it on the display.

Ⓑ Navigator key/ (Volume) key

By pressing this key (【▲】or【▼】) repeatedly, you can:

- scroll through (up or down) various lists or items
- adjust the receiver or speaker volume (up or down) while talking
- move the cursor (left or right) to edit number or name

4.2. Display

Handset display items

Item	Meaning
	Within range of a base unit
	Out of range of a base unit
IN USE	The line is in use. ● When flashing: – The call is put on hold. ● When flashing rapidly: An incoming call is now being received.
	Speaker is on.
	Ringer volume is off.
	Night mode is on.
BOOST	Clarity booster is on.
	Alarm is on.
1	Handset number
	Battery level
	Blocked call

5 Installation Instructions

5.1. Connections

- Use only the supplied Panasonic AC adaptor PQLV219Z.

Base unit

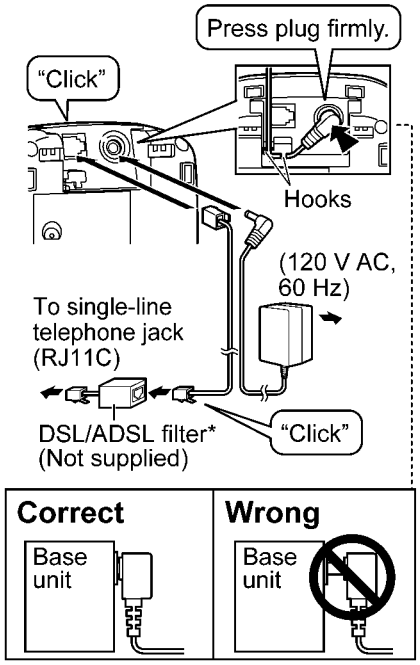

*For DSL/ADSL service users

Charger

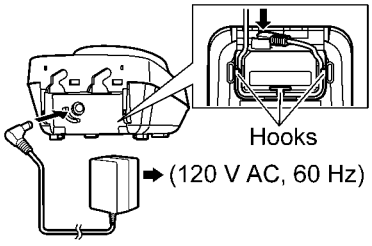

Note:

- The AC adaptor must remain connected at all times. (It is normal for the adaptor to feel warm during use.)
- The AC adaptor should be connected to a vertically oriented or floor-mounted AC outlet. Do not connect the AC adaptor to a ceiling-mounted AC outlet, as the weight of the adaptor may cause it to become disconnected.

During a power failure

The unit will not work during a power failure.
We recommend connecting a corded-type telephone (without AC adaptor) to the same telephone line or to the same telephone line jack using a Panasonic T-adaptor.
Emergency power can be supplied to the unit by connecting a Panasonic battery back-up power supply.

5.2. Battery

5.2.1. Battery Installation

- USE ONLY Ni-MH batteries AAA (R03) size.
- Do NOT use Alkaline/Manganese/Ni-Cd batteries.
- Confirm correct polarities (⊕, ⊖).

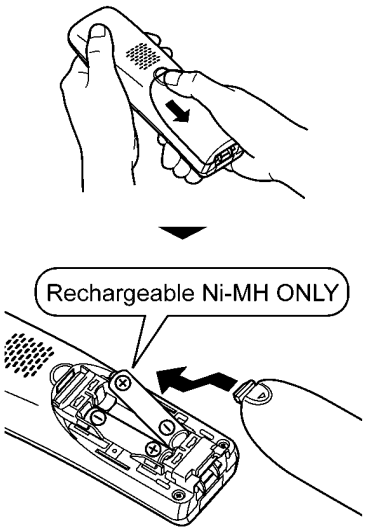

Note:

- Use the supplied rechargeable batteries. For replacement, we recommend using the Panasonic rechargeable batteries HHR-4DPA.
- Wipe the battery ends (⊕, ⊖) with a dry cloth.
- Avoid touching the battery ends (⊕, ⊖) or the unit contacts.

Attention:

A nickel metal hydride battery that is recyclable powers the product you have purchased.
Please call 1-800-8-BATTERY (1-800-822-8837) for information on how to recycle this battery.

5.2.2. Battery Charge

Charge for about 7 hours.

- When the batteries are fully charged, the charge indicator goes off.

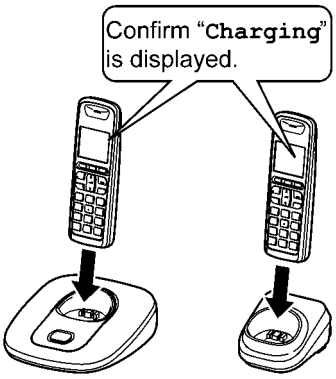

Note:

- It is normal for the handset to feel warm during charging.
- Clean the charge contacts of the handset, base unit, and charger with a soft and dry cloth. Clean if the unit is exposed to grease, dust, or high humidity.

Note for service:

The battery strength may not be indicated correctly if the battery is disconnected and connected again, even after it is fully charged. In that case, by recharging the battery as mentioned above, you will get a correct indication of the battery strength.

5.2.3. Battery Level

Icon	Battery level
	High
	Medium
	Low
	Needs charging.
	Empty

Note:

- The batteries need to be charged if the handset beeps while you are engaged in a call.

5.2.4. Panasonic Ni-MH Battery Performance (supplied batteries)

Operation	Operating time
In continuous use	5 hours max.*1
Not in use (standby)	11 days max.

*1 When the clarity booster feature is turned on: 3 hours max.

Note:

- Actual battery performance depends on a combination of how often the handset is in use and how often it is not in use (standby).
- Even after the handset is fully charged, the handset can be left on the base unit or charger without any ill effect on the batteries.
- The battery level may not be displayed correctly after you replace the batteries. In this case, place the handset on the base unit or charger and let it charge for at least 7 hours.

6 Operating Instructions

6.1. Programmable Settings

You can customize the unit by programming the following features using the handset.
To access the features, there are 2 methods:
– scrolling through the display menus
– using the direct commands

- Direct command is the main method used in this service manual.

6.1.1. Programming by Scrolling through the Display Menus

1 **[MENU]**
2 Press **[▼]** or **[▲]** to select the desired main menu. → **[SELECT]**
3 Press **[▼]** or **[▲]** to select the desired item in sub-menu 1. → **[SELECT]**
- In some cases, you may need to select from sub-menu 2. → **[SELECT]**

4 Press **[▼]** or **[▲]** to select the desired setting. → **[SAVE]**
- This step may vary depending on the feature being programmed.
- To exit the operation, press **[OFF]**.

Main menu	Sub-menu 1	Sub-menu 2
Caller list	–	–
Set date / time	Date and time*1	–
	Alarm	–
	Time adjust*1	–
V.M. access	–	–
Intercom	–	–
Initial setting	Ringer setting	Ringer volume
		Ringer tone
		Night mode – On / Off – Start / End
	Set date / time	Date and time*1
		Alarm
		Time adjust*1
	Voice Mail	Store V.M. no.*1
		VM tone detect*1
	Call block*1	–
	Message alert	–
	Display setting	LCD contrast
	Key tone	–
	Auto talk	–
	Caller ID edit*1	–
	Set tel line	Set dial mode*1
		Set flash time*1
		Set line mode*1
		C. WTG options
	Registration	Register handset
		Deregistration
	Change language	Display
Customer support	–	–

*1 If you program these settings using one of the handsets, you do not need to program the same item using another handset.

6.1.2. Programming using the Direct Commands

1 [MENU] → [#]

2 Enter the desired feature code.

3 Enter the desired setting code. → [SAVE]

- This step may vary depending on the feature being programmed.
- To exit the operation, press [OFF].

Note:

- In the following table, < > indicates the default settings.

Feature	Feature code	Setting code	System setting*1
Alarm	[7][2][0]	[1]: Once [2]: Daily [0]: <Off>	–
Auto talk*2	[2][0][0]	[1]: On [0]: <Off>	–
Block w/o num. (Block calls without phone number)	[2][4][0]	[1]: On [0]: <Off>	●
Call block	[2][1][7]	–	●
Caller list	[2][1][3]	–	–
Customer support*3	[6][8][0]	–	–
C.WTG options (Call Waiting Deluxe options)	[2][1][5]	[1]: On [0]: <Off>	–
Date and time	[1][0][1]	–	●
Deregistration	[1][3][1]	–	–
Display (Change language)	[1][1][0]	[1]: <English> [2]: Français	–
Intercom	[2][7][4]	–	–
Key tone*4	[1][6][5]	[1]: <On> [0]: Off	–
LCD contrast (Display contrast)	[1][4][5]	[1]–[6]: Level 1–6 <3>	–
Message alert	[3][4][0]	[1]: <On> [0]: Off	–
Register handset	[1][3][0]	–	–
Ringer tone*5, *6 (Handset)	[1][6][1]	[1]–[3]: Tone <1>–3 [4]–[7]: Melody 1–4	–
Ringer volume*7 (Handset)	[1][6][0]	[1]: Low [2]: Medium [3]: <High> [0]: Off	–
Set dial mode	[1][2][0]	[1]: Pulse [2]: <Tone>	●
Set flash time*8	[1][2][1]	[0]: 900ms [1]: <700ms> [2]: 600ms [3]: 400ms [4]: 300ms [5]: 250ms [*]: 200ms [#]: 160ms [6]: 110ms [7]: 100ms [8]: 90ms [9]: 80ms	●
Set line mode*9	[1][2][2]	[1]: A [2]: <B>	●
Night mode (On/Off)	[2][3][8]	[1]: On [0]: <Off>	–
Night mode (Start/End)	[2][3][7]	<11:00 PM/06:00 AM>	–
Store V.M. no. (V.M.: Voice Mail)	[3][3][1]	–	●
Time adjust*10 (Caller ID subscribers only)	[2][2][6]	[1]: <Caller ID auto> [0]: Manual	●
V.M. access (V.M.: Voice Mail)	[3][3][0]	–	–
VM tone detect (VM: Voice Mail)	[3][3][2]	[1]: <On> [0]: Off	●

*1 If "System setting" column is checked, you do not need to program the same item using another handset.
*2 If you subscribe to a Caller ID service and want to view the caller's information after lifting up the handset to answer a call, turn off this feature.
*3 The handset can display the Internet address where you can download the operating instructions or get further information for this product, using your computer.
*4 Turn this feature off if you prefer not to hear key tones while you are dialing or pressing any keys, including confirmation tones and error tones.
*5 If you subscribe to a distinctive ring service (such as IDENTA-RING), select a tone (tone 1 to 3). If you select a melody, you cannot distinguish lines by their ringers.
*6 If you select one of the melody ringer tones, the ringer tone continues to play for several seconds even if the caller has already hung up. You may either hear a dial tone or no one on the line when you answer the call.
*7 When the ringer volume is turned off, 🔕 is displayed and the handset does not ring for outside calls.
However even when the ringer volume is set to off, the handset rings at the low level for alarm, intercom calls, and paging.
*8 The flash time depends on your telephone exchange or host PBX. Contact your PBX supplier if necessary.
*9 Generally, the line mode setting should not be adjusted. If IN USE is not displayed when another phone connected to the same line is in use, you need to change the line mode to "A".
*10 This feature allows the unit to automatically adjust the date and time setting when caller information is received. To use this feature, set the date and time first.

6.2. Error Messages

If the unit detects a problem, one of the following messages is shown on the display.

Display message	Cause/solution
Busy or **System busy. Try again later.**	● The called unit is in use. ● Other units are in use and the system is busy. Try again later. ● The handset you are using is too far from the base unit. Move closer and try again. ● The handset's registration may have been canceled. Re-register the handset.
Check tel line	● The supplied telephone line cord has not been connected yet or not connected properly. Check the connections.
Use rechargeable battery.	● A wrong type of battery such as Alkaline or Manganese was inserted. Use only the rechargeable Ni-MH batteries.
Error!!	● The handset's registration has failed. Move the handset and base unit away from all electrical appliances and try again.
Invalid	● There is no handset registered to the base unit matching the handset number you entered. ● The handset is not registered to the base unit. Register the handset.
No link. Reconnect base AC adaptor.	● The handset has lost communication with the base unit. Move closer to the base unit and try again. ● Unplug the base unit's AC adaptor to reset the unit. Reconnect the adaptor and try again. ● The handset's registration may have been canceled. Re-register the handset.
Requires subscription to Caller ID.	● You must subscribe to a Caller ID service. Once you receive caller information after subscribing to a Caller ID service, this message will not be displayed.
Store V.M. no.	● You have not stored the voice mail access number. Store the number.

6.3. Troubleshooting

If you still have difficulties after following the instructions in this section, disconnect the base unit's AC adaptor, then reconnect the base unit's AC adaptor. Remove the batteries from the handset, and then insert the batteries into the handset again.

General use

Problem	Cause/solution
The unit does not work.	• Make sure the batteries are installed correctly. • Fully charge the batteries. • Check the connections. • Unplug the base unit's AC adaptor to reset the unit. Reconnect the adaptor and try again. • The handset has not been registered to the base unit. Register the handset.
I cannot hear a dial tone.	• The base unit's AC adaptor or telephone line cord is not connected. Check the connections. • If you are using a splitter to connect the unit, remove the splitter and connect the unit to the wall jack directly. If the unit operates properly, check the splitter. • Disconnect the base unit from the telephone line and connect the line to a known working telephone. If the working telephone operates properly, contact our service personnel to have the unit repaired. If the working telephone does not operate properly, contact your service provider/telephone company.
The indicator on the handset flashes slowly.	• New voice mail messages have been recorded. Listen to the new voice mail messages.

Programmable settings

Problem	Cause/solution
I have changed the display language to a language I cannot read.	• Change the display language.
While programming, the handset starts to ring.	• A call is being received. Answer the call and start again after hanging up.
I cannot register a handset to a base unit.	• The maximum number of handsets (6) is already registered to the base unit. Cancel unused handset registrations from the base unit. • Place the handset and the base unit away from other electrical appliances.

Battery recharge

Problem	Cause/solution
The handset beeps and/or flashes.	• Battery charge is low. Fully charge the batteries.
I fully charged the batteries, but still flashes or is displayed.	• Clean the charge contacts and charge again. • It is time to replace the batteries.
I fully charged the batteries, but the operating time seems to be shorter.	• Clean the battery ends (⊕, ⊖) and the charge contacts with a dry cloth and charge again.

Making/answering calls, intercom

Problem	Cause/solution
is displayed.	• The handset is too far from the base unit. Move closer. • The base unit's AC adaptor is not properly connected. Reconnect AC adaptor to the base unit. • You are using the handset or base unit in an area with high electrical interference. Re-position the base unit and use the handset away from sources of interference. • The handset is not registered to the base unit. Register it.
Noise is heard, sound cuts in and out.	• You are using the handset or base unit in an area with high electrical interference. Re-position the base unit and use the handset away from sources of interference. • Move closer to the base unit. • If you use a DSL/ADSL service, we recommend connecting a DSL/ADSL filter between the base unit and the telephone line jack. Contact your DSL/ADSL provider for details.
The handset does not ring.	• The ringer volume is turned off. Adjust the ringer volume. • Night mode is turned on. Turn it off.
I cannot make a call.	• The dialing mode may be set incorrectly. Change the setting. • The handset is too far from the base unit. Move closer and try again.
I cannot make long distance calls.	• Make sure that you have long distance service.

Liquid damage

Problem	Cause/solution
Liquid or other form of moisture has entered the handset/base unit.	• Disconnect the AC adaptor and telephone line cord from the base unit. Remove the batteries from the handset and leave to dry for at least 3 days. After the handset/base unit are completely dry, reconnect the AC adaptor and telephone line cord. Insert the batteries and charge fully before use.

Caution:

- To avoid permanent damage, do not use a microwave oven to speed up the drying process.

7 Schematic Diagram

7.1. For Schematic Diagram

7.1.1. Base Unit (Schematic Diagram (Base Unit_Main))

Notes:

1. DC voltage measurements are taken with voltmeter from the negative voltage line.

> Important Safety Notice:
> Components identified by ⚠ mark have special characteristics important for safety. When replacing any of these components, use only the manufacturer's specified parts.

2. The schematic diagrams may be modified at any time with the development of new technology.

7.1.2. Handset (Schematic Diagram (Handset_Main))

Notes:

1. DC voltage measurements are taken with an oscilloscope or a tester with a ground.
2. The schematic diagrams may be modified at any time with the development of new technology.

7.1.3. Charger Unit (Schematic Diagram (Charger Unit))

Notes:

1. DC voltage measurements are taken with voltmeter from the negative voltage line.

> Important Safety Notice:
> Components identified by ⚠ mark have special characteristics important for safety. When replacing any of these components, use only the manufacturer's specified parts.

2. The schematic diagrams may be modified at any time with the development of new technology.

7.2. Schematic Diagram (Base Unit_Main)

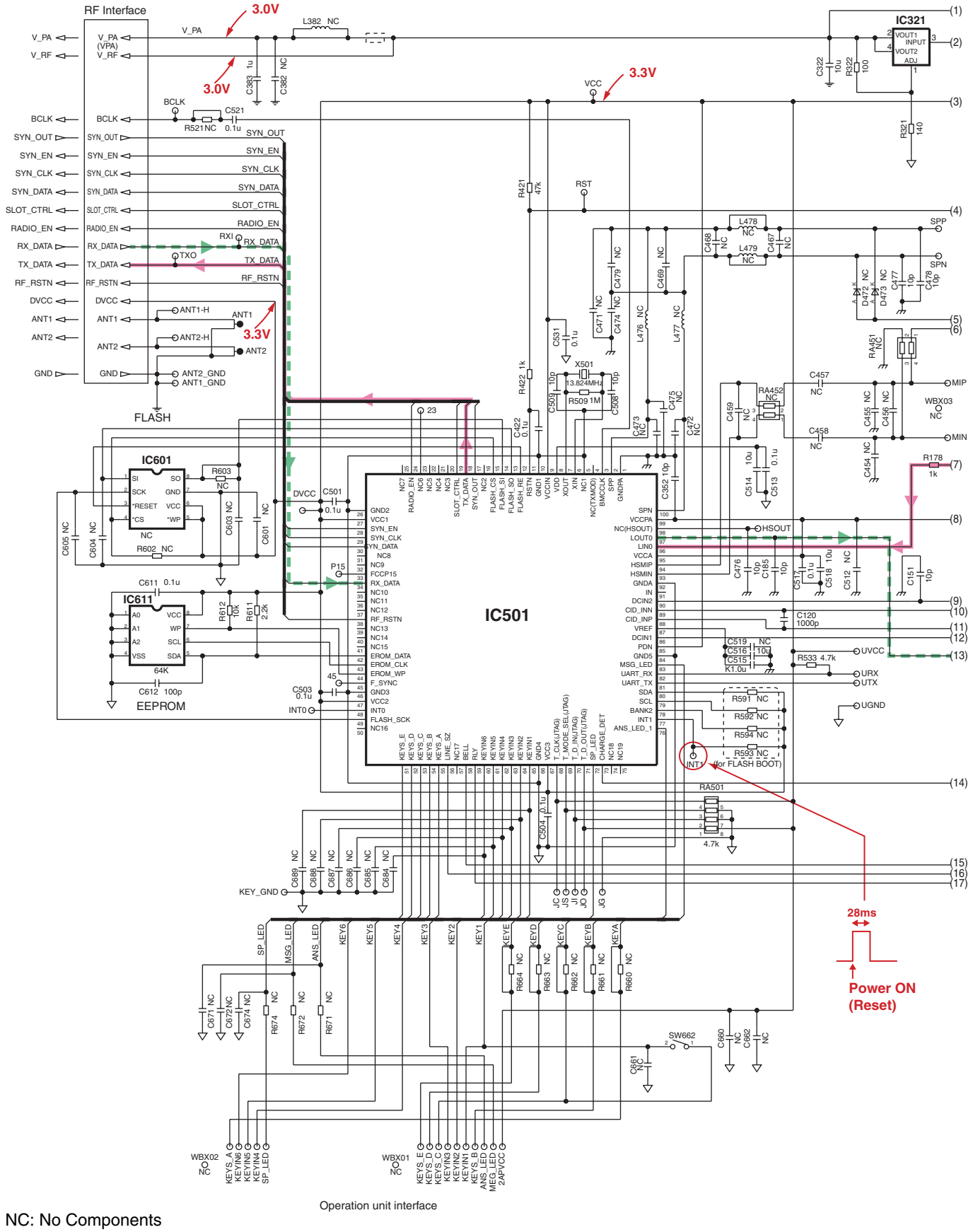

NC: No Components

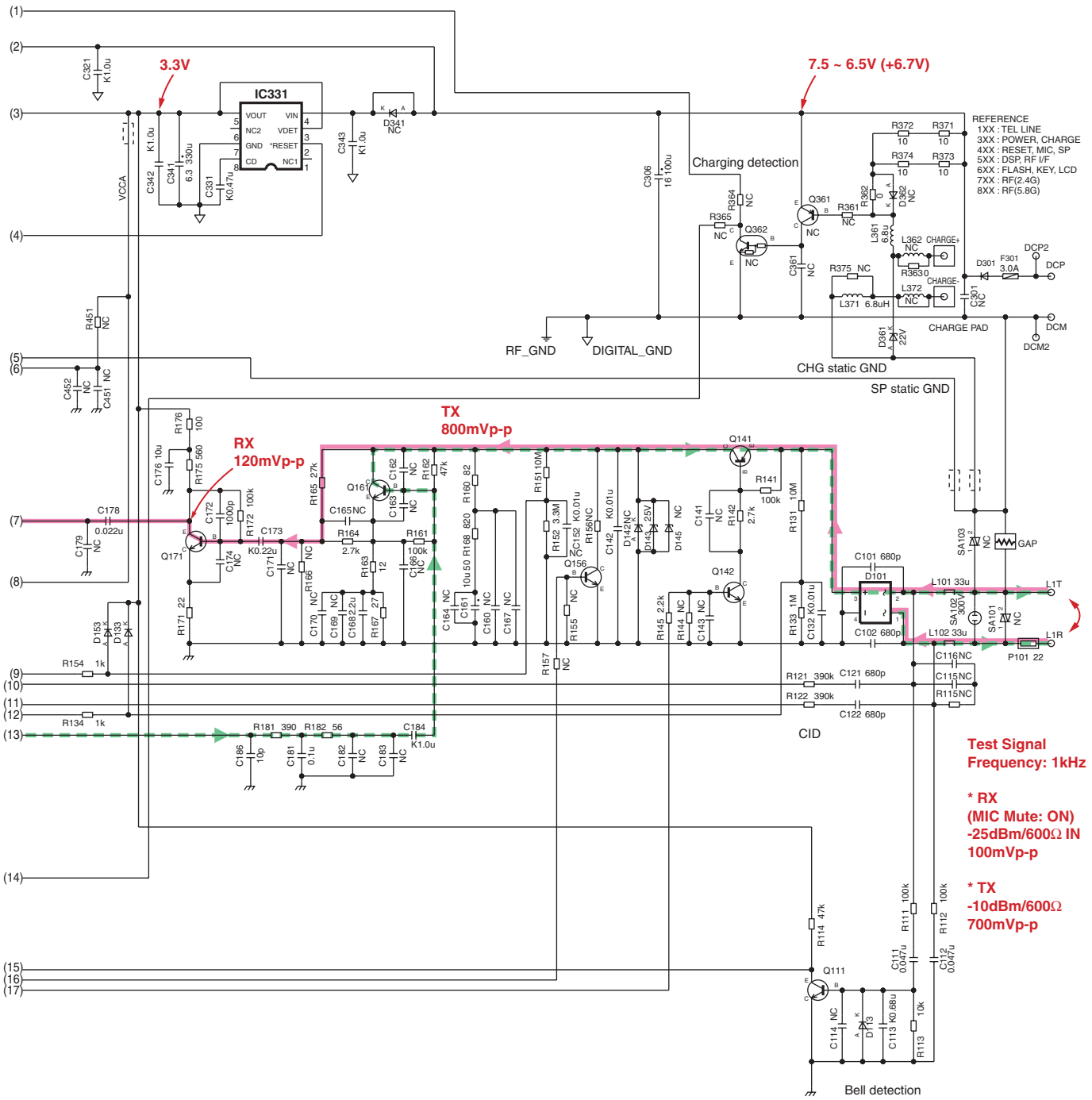

NC: No Components

KX-TG6411/6412/6413/6414C SCHEMATIC DIAGRAM (Base Unit_Main)

7.3. Schematic Diagram (Base Unit_RF Part)

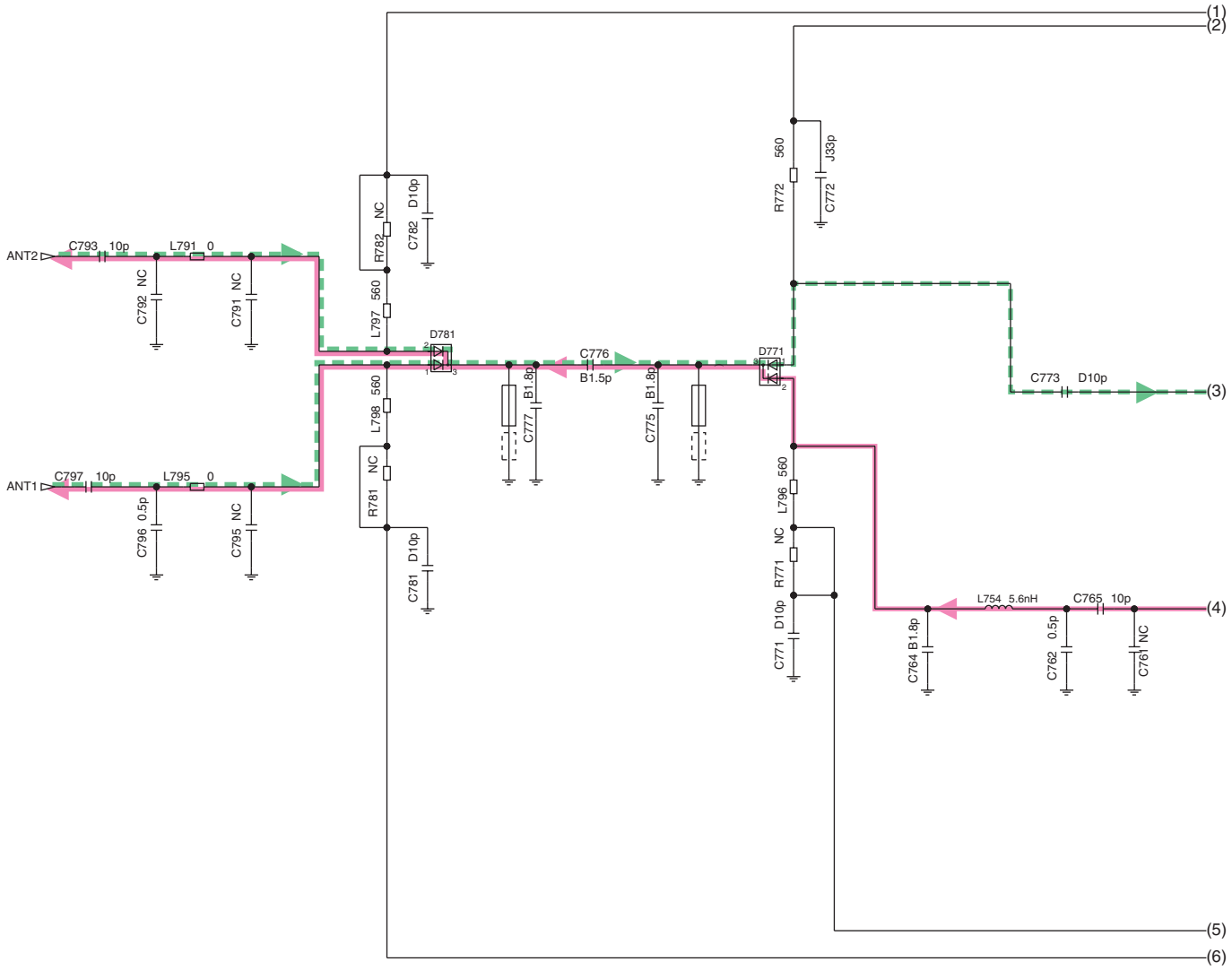

NC: No Components

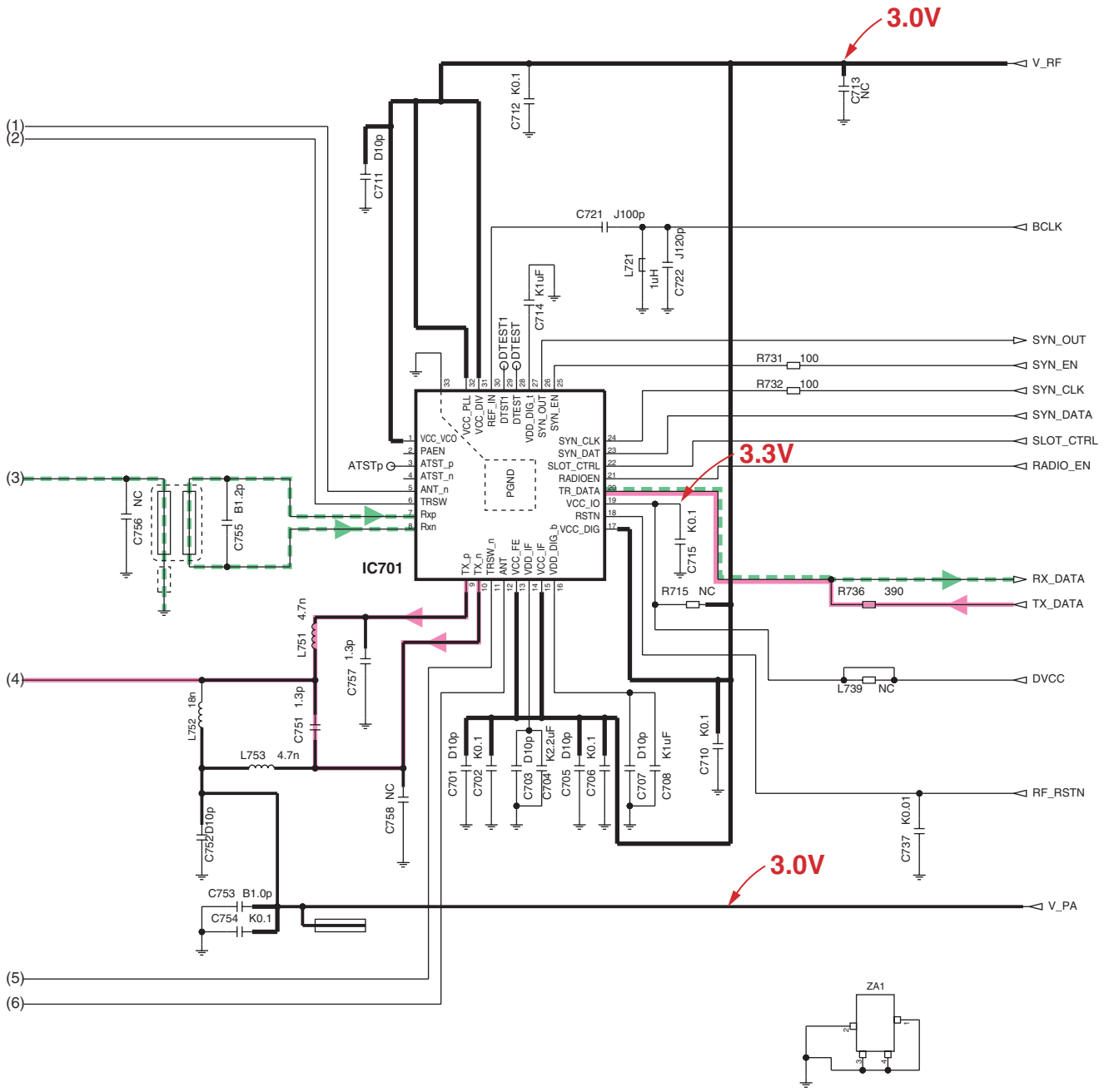

NC: No Components

KX-TG6411/6412/6413/6414 SCHEMATIC DIAGRAM (Base Unit_RF Part)

7.4. Schematic Diagram (Handset_Main)

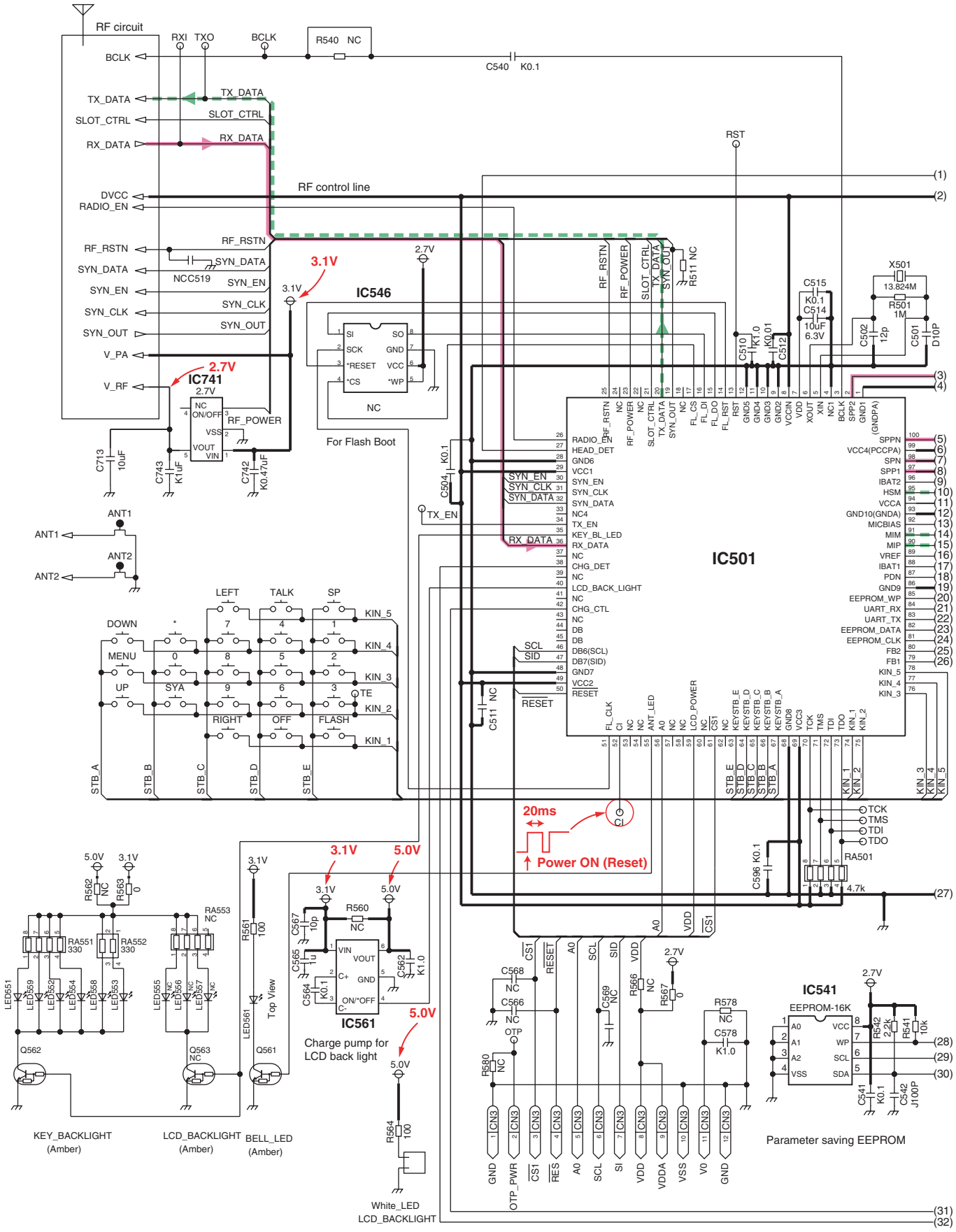

NC: No Components

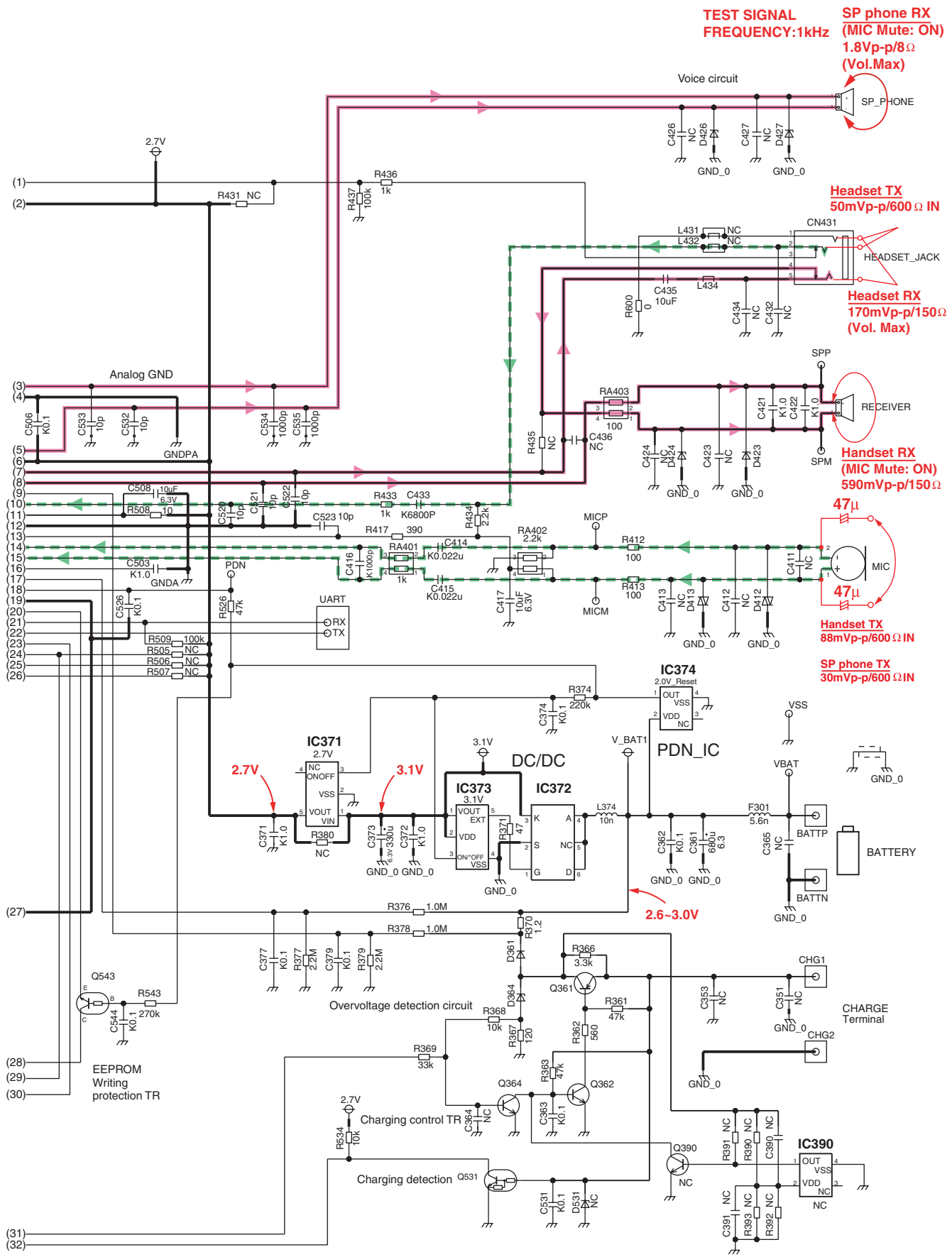

KX-TGA641 SCHEMATIC DIAGRAM (Handset_Main)

7.5. Schematic Diagram (Handset_RF Part)

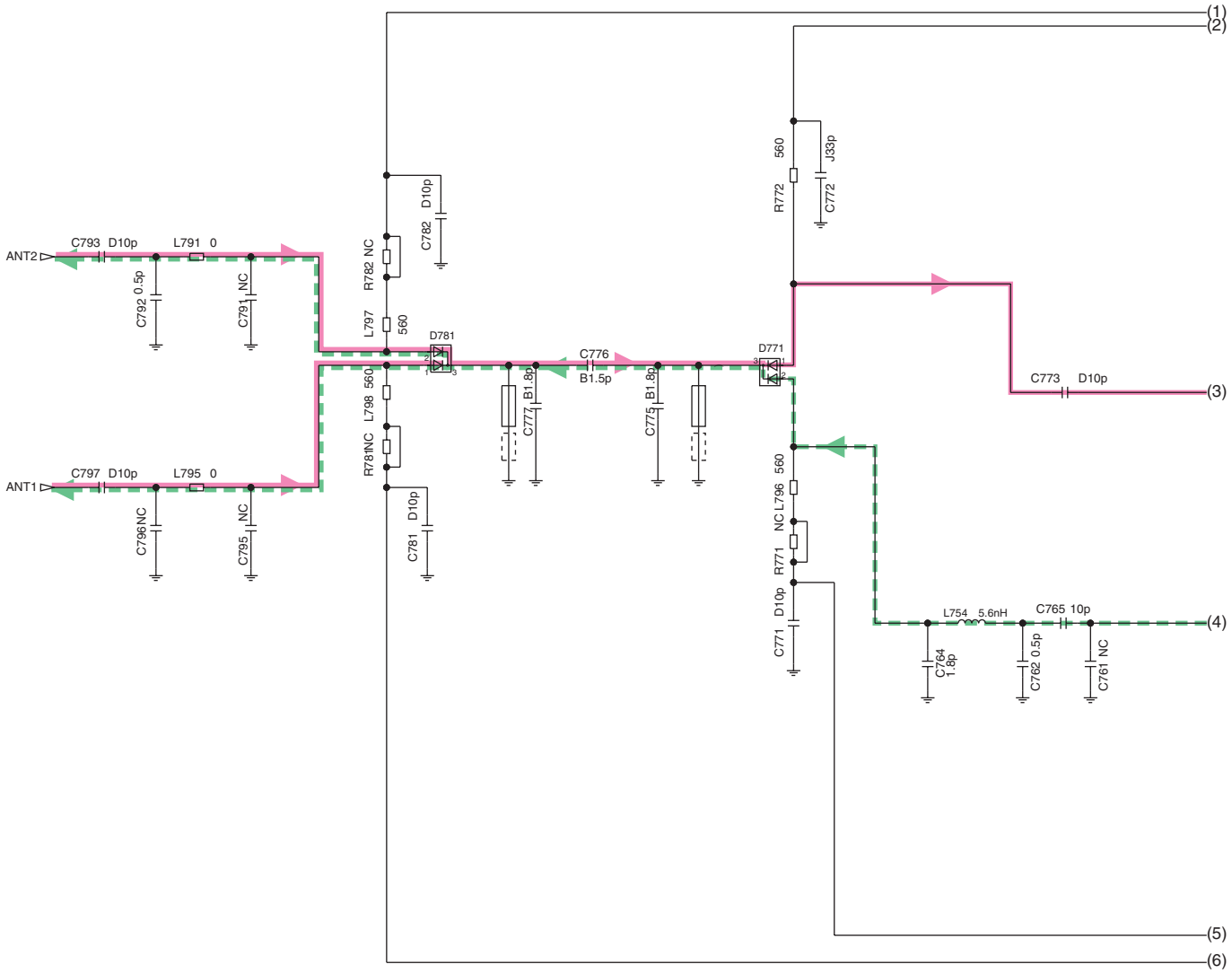

NC: No Components

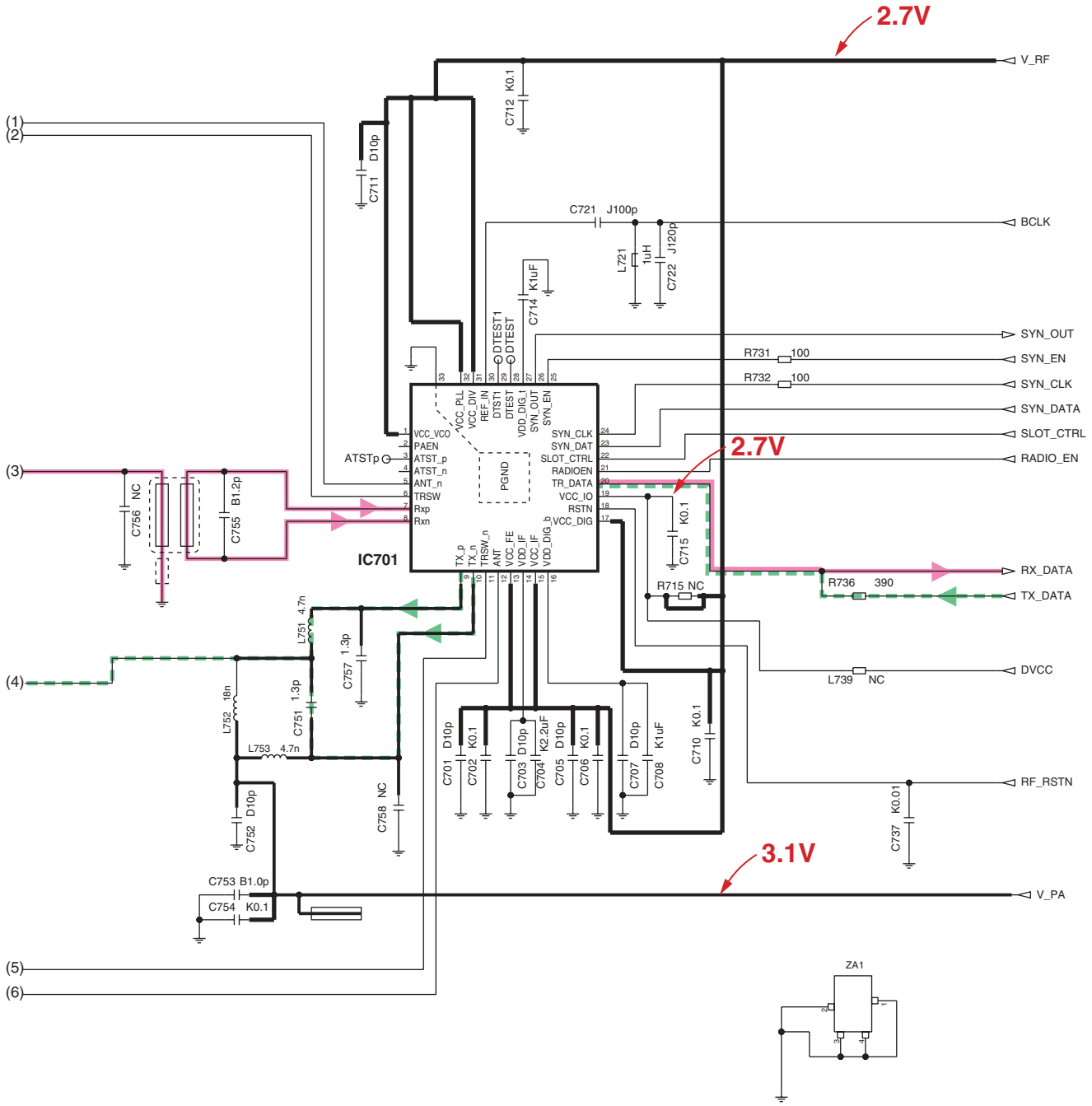

NC: No Components

KX-TGA641 SCHEMATIC DIAGRAM (Handset_RF Part)

7.6. Schematic Diagram (Charger Unit)

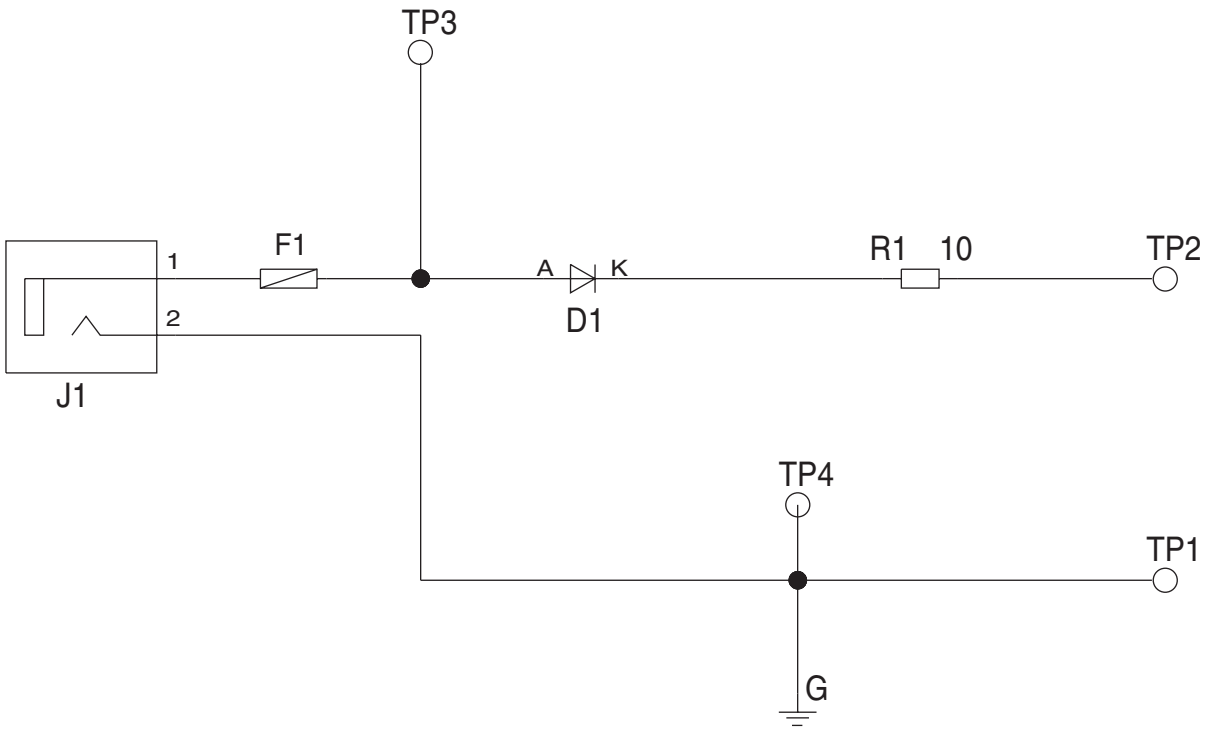

SCHEMATIC DIAGRAM (Charger Unit)

8 Exploded View and Replacement Parts List

1. RTL (Retention Time Limited)

   Note:

   The “RTL” marking indicates that its Retention Time is Limited.
   When production is discontinued, this item will continue to be available only for a specific period of time.
   This period of time depends on the type of item, and the local laws governing parts and product retention. At the end of this period, the item will no longer be available.
2. Important safety notice

   Components identified by the ⚠ mark indicates special characteristics important for safety. When replacing any of these components, only use specified manufacture’s parts.
3. ISO code (Example: ABS-94HB) of the remarks column shows quality of the material and a flame resisting grade about plastics.

Note:

(*1) You can download and refer to the Operating Instructions (Instruction book) on TSN Server.

Safety	Ref. No.	Part No.	Part Name & Description	Remark
⚠	A1	PQLV219Z	AC ADAPTOR	
	A2	PQJA10075Z	CORD, TELEPHONE	
	A3	PNKL1010Z1	STAND, WALL MOUNT (for KX-TG6411CT) (for KX-TG6413CT) (for KX-TG6414CT)	PS-HB
	A3	PNKL1010Z2	STAND, WALL MOUNT (for KX-TG6412CS)	PS-HB
	A4	PNQX1625Z	INSTRUCTION BOOK (for English) (*1)	
	A5	PNQX1626Z	INSTRUCTION BOOK (for France) (*1)	ABS-HB
	A6	PNKE1029Z1	HANGER, BELT CLIP (for KX-TG6411CT) (for KX-TG6413CT) (for KX-TG6414CT)	ABS-HB
	A6	PNKE1029Z2	HANGER, BELT CLIP (for KX-TG6412CS)	
	A7	PNLC1008ZT	CHARGER UNIT ASS'Y (RTL) (for KX-TG6413CT) (for KX-TG6414CT)	
	A7	PNLC1008ZS	CHARGER UNIT ASS'Y (RTL) (for KX-TG6412CS)	
	A8	PNHS1079Z	SPACER, BATTERY	
	A9	PNKK1027Z1	LID, BATTERY COVER (for KX-TG6411CT) (for KX-TG6413CT) (for KX-TG6414CT)	ABS-HB
	A9	PNKK1027Z2	LID, BATTERY COVER (for KX-TG6412CS)	ABS-HB

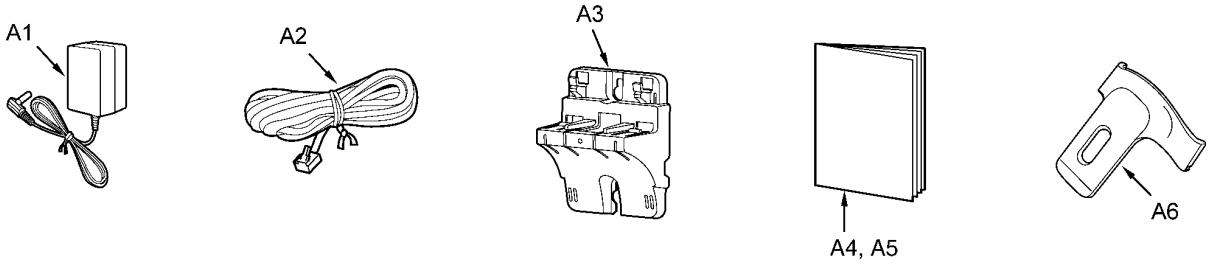

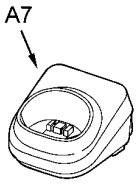

* Attach the SPACER (A8) to the exact location described below.

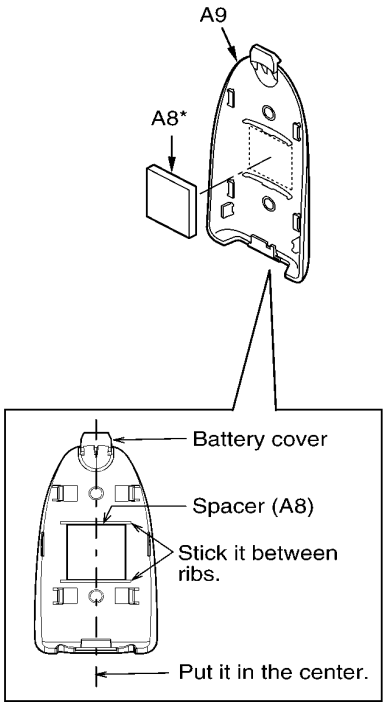

Y.M
KXTG6411CT
KXTG6412CS
KXTG6413CT
KXTG6414CT
KXTGA641CS
KXTGA641CT