TEAC®

SERVICE MANUAL

LCM642

6.4" TFT LCD COLOUR MONITOR

Effective: January, 1999

LCM642SERV

BLOCK DIAGRAM

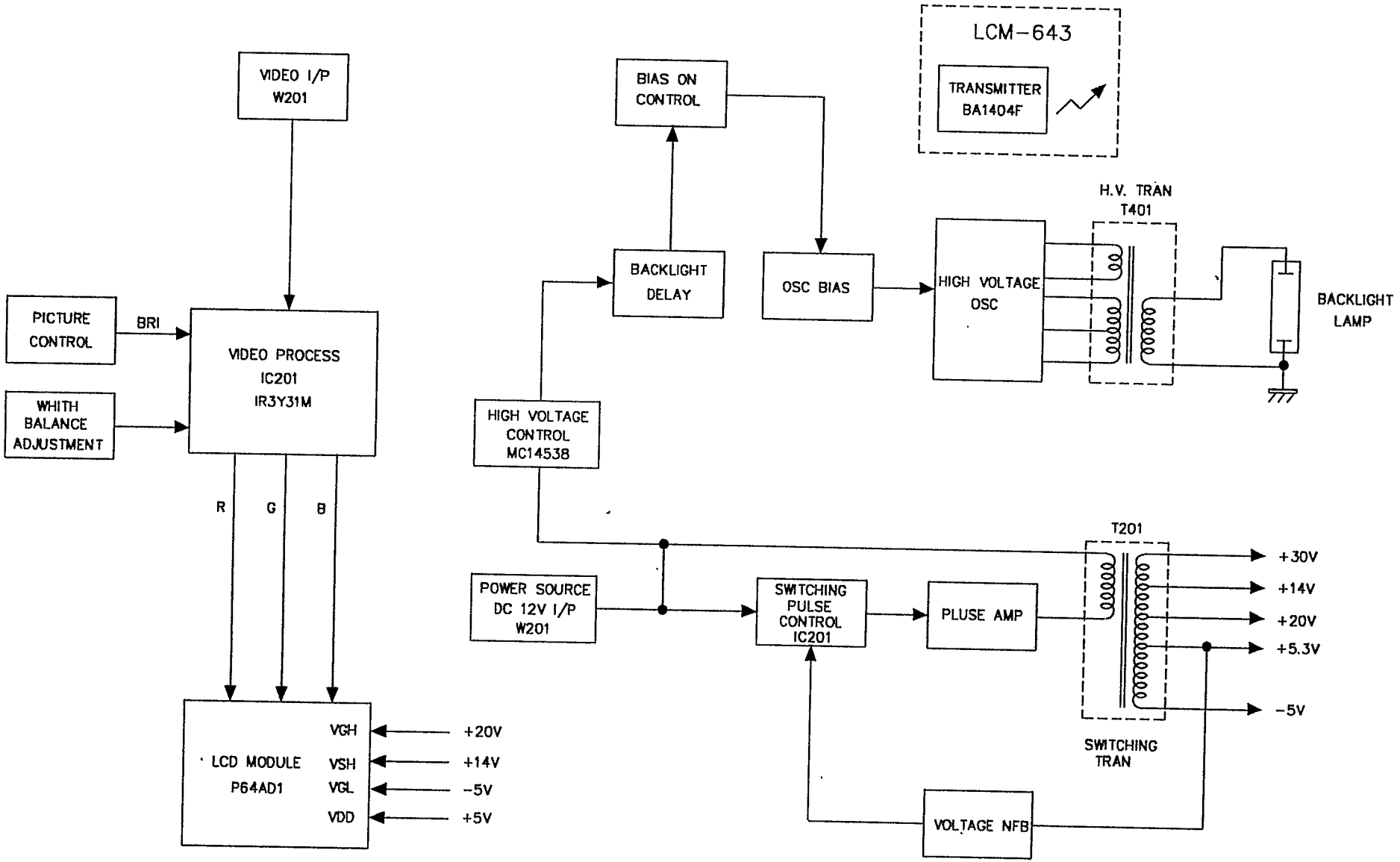

LCM-642
LCM-643

ACTION ELECTRONICS CO., LTD
TV ELECTRICAL SPECIFICATION

REVISION	0

MODEL NO: LCM-642 NTSC/PAL
SUPPLY VOLTAGE: DC 12V

DATE: 87/03/09
TEST: 邓

PAGE1

DESCRITION	UNIT	LIMIT	NOMINAL	NO.1	NO.2	NO.3	NO.4
VA TEST							
H.V. MAX.	Vp-p	2.1K	2.5K				
Q101 C PIN	Vp-p	15	17				
D101 14VDC	V	14±0.4	14				
L102 5VDC	V	5 +0.2 -0	5				
D102 20VDC	V	20+3 -1	20				
D104 30VDC	V	30+3 -1	30				
D105 -5VDC	V	-5±0.2	-5				
DC CONSUMPTION	W	9	6				
AC CONSUMPTION	W	—	—				
LUMINANCE	LUX	150	220				

91-T9-0001

ALIGNMENT PROCEDURE

1. WORKING VOLTAGES CONFIRMATION

1) 5.0V voltage adjustment:
   Adjust S102 to make the voltage of the positive pole of C116 be 5.10 ± 0.05V.

2) Other working voltages confirmation:
   C110 ⊕ : 14V ± 1V
   C113 ⊕ : 20V ± 1.5V
   C122 ⊕ : 30V ± 2V
   C120 ⊕ : −5V ± 0.5V

2. H−POSITION ADJUSTMENT

If the picture is not at the center of the screen, adjust the H−POS on the back of LCD to get the correct horizontal position.

MAIM P.C.B TOP VIEW

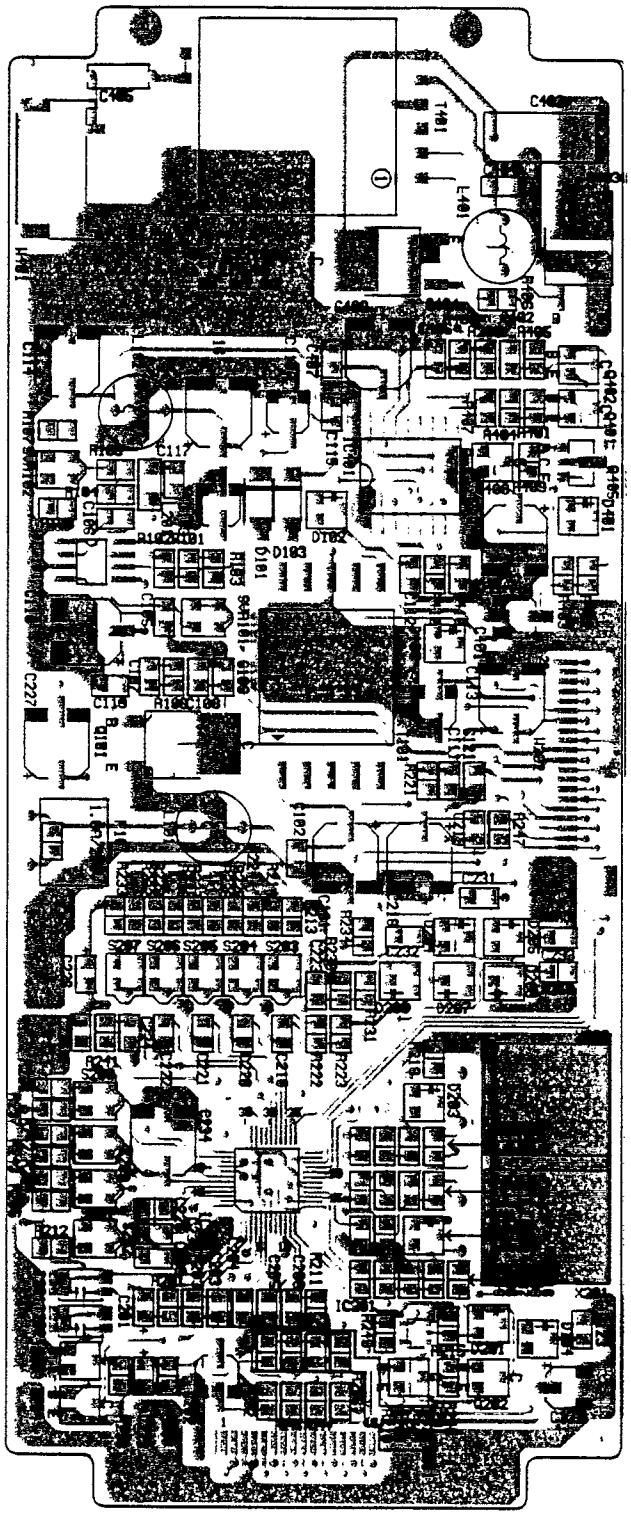

CONTROL P.C.B TOP VIEW

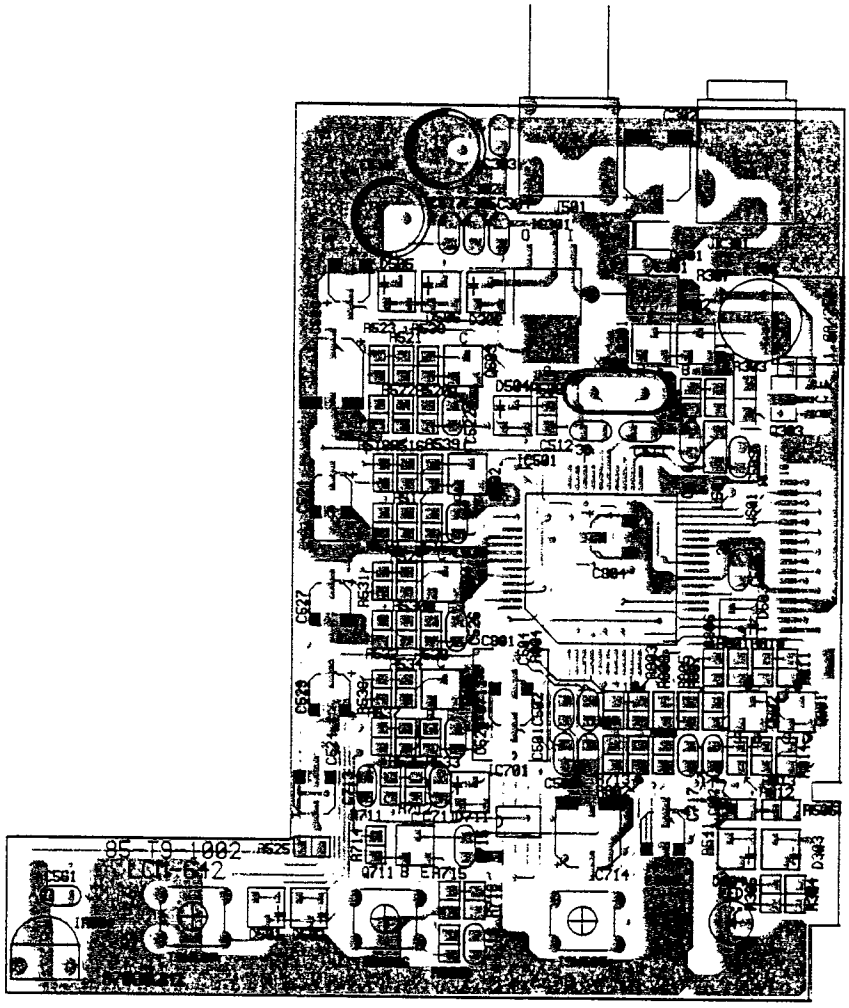

TROUBLE SHOOTING FLOW CHART

A.

No Raster

↓ YES

Check DC input jack.
Check adaptor power.

↓ NO

Check Back-Lite
connection wire.

↓ NO

Check DC 12V on L401

↓ NO

Check Q403, Q404
collector output.

↓ NO

Check T401 Hi-voltage
output.

TROUBLE SHOOTING FLOW CHART

B.

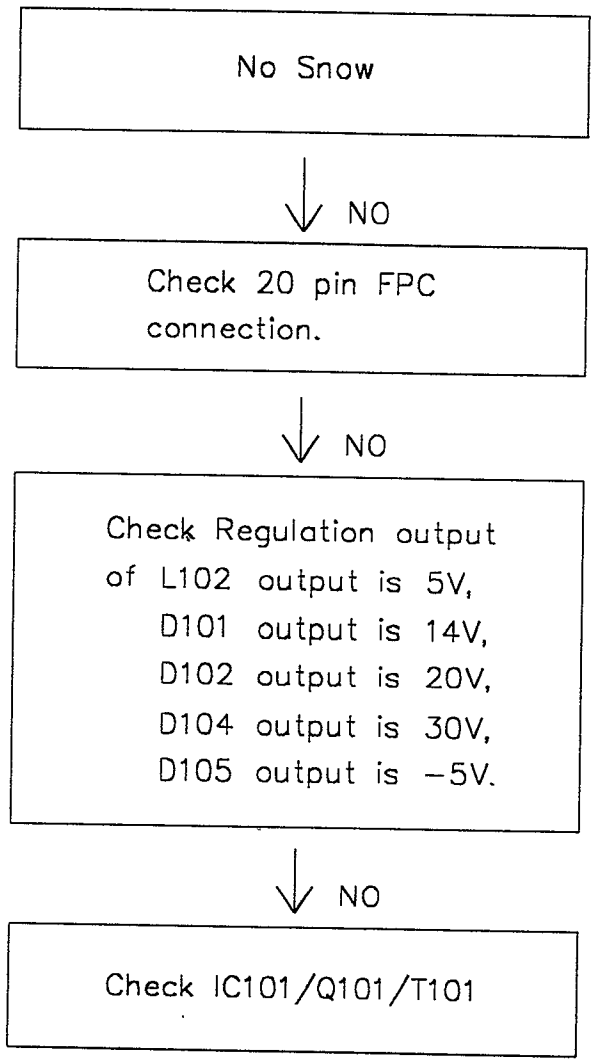

LCM-642(OSD) EXPLODED VIEW

No.	PART NAME	Q'TY
1	F-CAB	1
2	B-CAB	1
3	SW.KNOB	1
4	6.4" LED PANEL	1
5	MAIN PCB	1
6	CONTROL PCB	1
7	FUNCTION PLT	1
8	MODEL PLT	1
9	BREAKET	1
10	SCREW TP 1.7*5 RD+	4
11	SCREW TP 2.6*8 RD+	4
12	SCREW TP 2.0*6 FL+	6
13		
14		
15		
16		

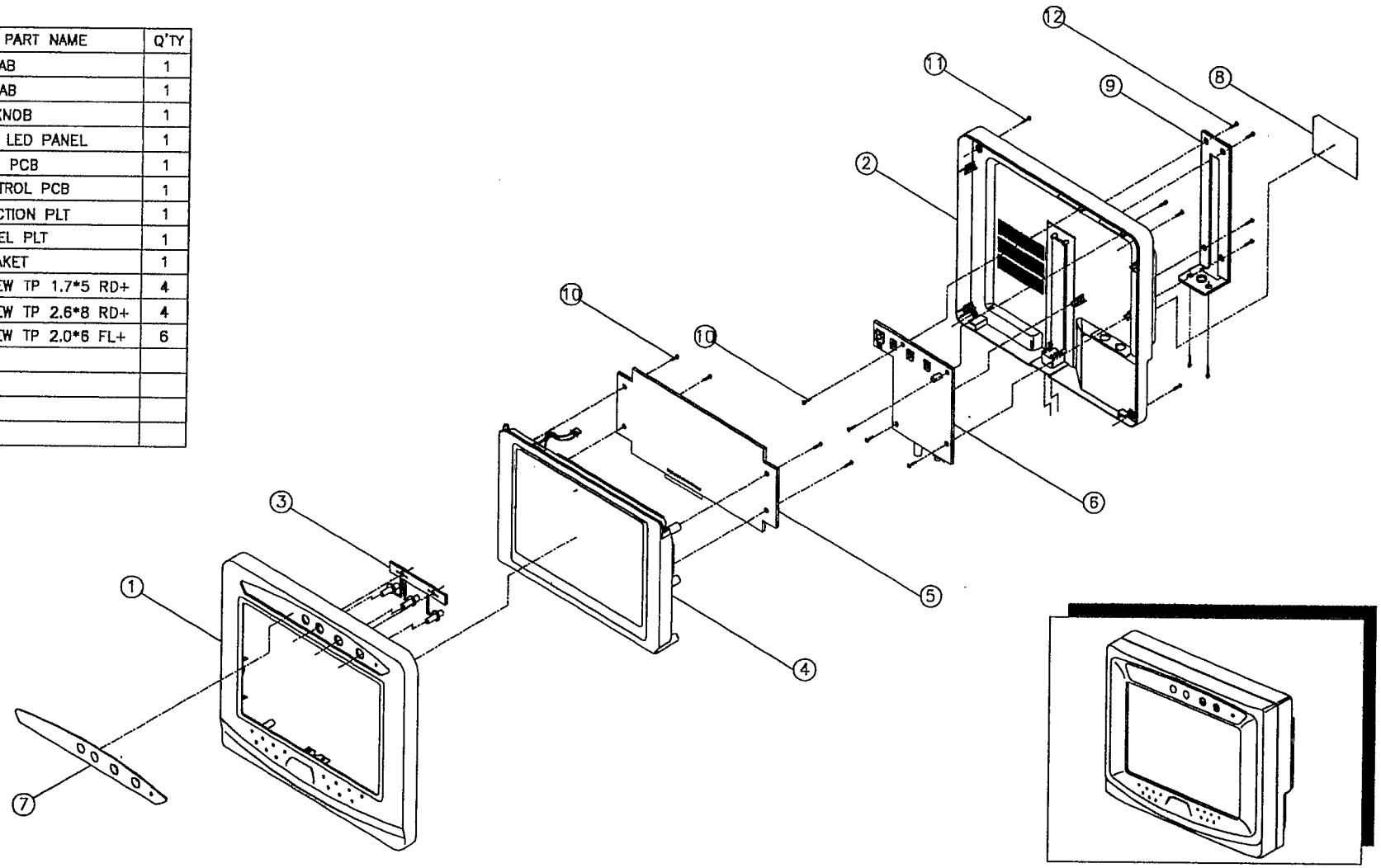

表代號: BMR28
表日期: 98/12/16
品料號: LCM642-OAS007

** SPARE PARTS LIST **

規格: LCM-642A "OFFBOAD" 6.4" LCD M

頁 次: 1
印表時間: 11:36

次	料品代號	料品規格	單位	單位用量	單價	金額	插件位置	備註
	02-T9-0007	FINAL LCM-642A "OFFBOAD"	EA	1.0000	0.0000	0.0000		
	02-T9-1101	MAIN PCB ASS'Y 642 N/P	EA	1.0000	0.0000	0.0000		
	02-T9-1103	BRIGHT PCB ASS'Y 642	EA	1.0000	0.0000	0.0000		
	TOTAL: (02)					0.0000		
	04-T9-1101	MAIN PCB ASS'Y 642 N/P	EA	1.0000	0.0000	0.0000		
	04-T9-1103	BRIGHT PCB ASS'Y 642	EA	1.0000	0.0000	0.0000		
	TOTAL: (04)					0.0000		
	10-05-1026	IC FA7610P(N) 8P 富士 S	EA	1.0000	0.8535	0.8535		IC101
	10-15-1005	IC MC14538BDW SOP16	EA	1.0000	0.3900	0.3900		IC401
	10-15-1069	IC BU4SU69 SMP5 ROHM	EA	1.0000	0.1257	0.1257		IC301
	10-20-0129	IC IR3Y31M QFP48 SHARP	EA	1.0000	4.1167	4.1167		IC201
	TOTAL: (10)					5.4859		
	11-27-6403	LCD P64AD1 6.4" RGB PRIME	EA	1.0000	209.5197	209.5197		
	TOTAL: (11)					209.5197		
	12-05-5006	X'TAL 4.43MHZ H	EA	1.0000	0.2835	0.2835		X201
	12-05-5008	X'TAL 3.579545MHZ H	EA	1.0000	0.2600	0.2600		X202
	12-62-2001	TR 2SA1037K(B) T146 R	EA	2.0000	0.0272	0.0544		Q202 401
	12-63-1001	TR 2SC 3518-ZK CHIP NEC	EA	3.0000	0.4072	1.2216		Q101 403 4
	12-63-2002	TR 2SB1073R SMD PNP/PANASO	EA	1.0000	0 1709	0.1709		C405
	12-64-1002	TR DTC144EK T146 R	EA	5.0000	0.0341	0.1705		Q201 203 2
	12-66-6201	TR 2SK208 "R" SMT TOSHIBA	EA	2.0000	0.1153	0.2306		Q801 802
	TOTAL: (12)					2.3915		
	13-65-1001	D MA158 CHIP 松下 BAS21	EA	1.0000	0.1185	0.1185		D303
	13-65-1002	D MA701A/RB160L-40 CHIP	EA	2.0000	0.1094	0.2188		D103
	13-65-1003	D MA152K/DAN 212K CHIP	EA	11.0000	0.0368	0.4048		D102 104 1
	13-65-1012	D RS1J CHIP ROHM	EA	1.0000	0.0823	0.0823		D101
	TOTAL: (13)					0.8244		
	16-62-1000	RESISTOR 0 1/10W CP	EA	16.0000	0.0016	0.0256		R214 222 2
	16-62-1100	RESISTOR 10 1/10W CP	EA	2.0000	0.0016	0.0032		R407
	16-62-1102	RESISTOR 1K 1/10W CP	EA	6.0000	0.0016	0.0096		R209 235 4
	16-62-1103	RESISTOR 10K 1/10W CP	EA	3.0000	0.0016	0.0048		R208 218 4
	16-62-1104	RESISTOR 100K 1/10W CP	EA	3.0000	0.0016	0.0048		R248 408
	16-62-1105	RESISTOR 1M 1/10W CP	EA	2.0000	0.0016	0.0032		R211 239
	16-62-1106	RESISTOR 10M 1/10W CP	EA	4.0000	0.0016	0.0064		R203
	16-62-1153	RESISTOR 15K 1/10W CP	EA	4.0000	0.0016	0.0064		R212 232 2
	16-62-1154	RESISTOR 150K 1/10W CP	EA	3.0000	0.0016	0.0048		R229
	16-62-1183	RESISTOR 18K 1/10W CP (080	EA	2.0000	0.0016	0.0032		R238 243
	16-62-1184	RESISTOR 180K 1/10W CP	EA	1.0000	0.0016	0.0016		R102
	16-62-1221	RESISTOR 220 1/10W CP	EA	1.0000	0.0016	0.0016		R403

代號: BMR28
日期: 98/12/16
料號: LCM642-0AS007

** SPARE PARTS LIST **

規格: LCM-642A "OFFBOAD" 6.4" LCD M

印表時間: 11:36

料品代號	料品規格	單位	單位用量	單價	金額	插件位置	備註
16-62-1222	RESISTOR 2K2 1/10W CP	EA	5.0000	0.0016	0.0080		R108 201 2
16-62-1223	RESISTOR 22K 1/10W CP	EA	8.0000	0.0016	0.0128		R107 213 2
16-62-1273	RESISTOR 27K 1/10W CP	EA	8.0000	0.0016	0.0128		S202 S203+
16-62-1333	RESISTOR 33K 1/10W CP	EA	1.0000	0.0016	0.0016		R103
16-62-1334	RESISTOR 330K 1/10W CP	EA	2.0000	0.0016	0.0032		R104 240
16-62-1391	RESISTOR 390 1/10W CP	EA	1.0000	0.0016	0.0016		R106
16-62-1393	RESISTOR 39K 1/10W CP	EA	1.0000	0.0016	0.0016		R231
16-62-1394	RESISTOR 390K 1/10W CP	EA	1.0000	0.0016	0.0016		R101
16-62-1470	RESISTER 47 OHM 1/10W CP	EA	2.0000	0.0016	0.0032		R221 250
16-62-1472	RESISTOR 4.7K 1/10W CP	EA	2.0000	0.0016	0.0032		R215 230
16-62-1473	RESISTOR 47K 1/10W CP	EA	1.0000	0.0016	0.0016		R402
16-62-1479	RESISTOR 4.7R 1/10W CP	EA	1.0000	0.0022	0.0022		R804
16-62-1561	RESISTOR 560 1/10W CP	EA	6.0000	0.0016	0.0096		R206 234 2
16-62-1562	RESISTOR 5K6 1/10W CP	EA	3.0000	0.0016	0.0048		R207 219
16-62-1563	RESISTOR 56K 1/10W CP	EA	1.0000	0.0016	0.0016		R205
16-62-1682	RESISTOR 6K8 1/10W CP	EA	5.0000	0.0016	0.0080		R204 210 2
16-62-1684	RESISTOR 680K 1/10W CP	EA	1.0000	0.0016	0.0016		R241
16-62-1750	RESISTOR 75 1/10W CP	EA	1.0000	0.0016	0.0016		R202
16-62-1822	RESISTOR 8K2 1/10W CP	EA	4.0000	0.0016	0.0064		R105 220 2
OTAL: (16)					0.1622		
17-0F-1390	CERAMIC CAP 39P/3KV 5%	EA	1.0000	0.0325	0.0325		C405
17-87-1104	DMPP 0.1U/250V	EA	1.0000	0.0717	0.0717		C403
17-G5-1159	MPE CAP 1.5U/63V 5%	EA	1.0000	0.2340	0.2340		C528
OTAL: (17)					0.3382		
18-01-3005	FILTER C TRAP 3.6MHZ TDK N	EA	1.0000	0.6370	0.6370		T201
18-03-3005	FILTER C TRAP 4.4MHZ TDK N	EA	1.0000	0.6370	0.6370		T202
OTAL: (18)					1.2740		
19-43-2331	CHOKE 0.5A 330UH	EA	3.0000	0.0659	0.1977		L101 102 4
19-81-3270	CHIP CHOKE 27UH 3225 TDK	EA	1.0000	0.0958	0.0958		L201
OTAL: (19)					0.2935		
21-42-1020B	CHIP SEMI VR 1K RH03A3A13X	EA	1.0000	0.0651	0.0651		S102
21-42-1030B	CHIP SEMI VR 10K RH03A3A14	EA	1.0000	0.0656	0.0656		S101
21-42-4730B	CHIP SEMI VR 47K RH03A3AS4	EA	3.0000	0.0654	0.1962		S204 205 2
OTAL: (21)					0.3269		
22-82-0214	SWITCH TACT	EA	2.0000	0.0389	0.0778		TSW505 506
OTAL: (22)					0.0778		
23-05-5901	DC JACK 5.9 2A 台灣星電	EA	1.0000	0.1733	0.1733		JK301
23-06-0018	JACK RCA YELLOW (SW)	EA	1.0000	0.0997	0.0997		J501
OTAL: (23)					0.2730		

料品代號	料品規格	單位	單位用量	單價	金額	插件位置	備註
24-56-0280	WAFER 2P 8.0MM JST	EA	1.0000	0.1820	0.1820		W401
24-56-1602	WAFER 16P 1.0M/M U-CP	EA	1.0000	0.3380	0.3380		W501
24-56-1603	WAFER 16P 1.0M/M D-CP	EA	1.0000	0.3380	0.3380		W201
24-56-2013	WAFER 20P 1.0MM D-CP	EA	1.0000	0.4333	0.4333		W202
24-71-1602	BUS LINE 16P	EA	1.0000	0.2302	0.2302		
24-71-2002	BUS LINE 20P	EA	1.0000	0.3108	0.3108		
TOTAL: (24)					1.8323		
25-20-1621	MINI FUSE 1.6A	EA	1.0000	0.2297	0.2297		F301
TOTAL: (25)					0.2297		
28-11-2101	CERAMIC CAP 100P/10V CP C	EA	1.0000	0.0074	0.0074		C233
28-11-2561	CERAMIC CAP 560P/10V CP	EA	1.0000	0.0074	0.0074		C406
28-11-2681	CERAMIC CAP 680P/10V CP	EA	1.0000	0.0076	0.0076		C203
28-11-2821	CERAMIC CAP 820P/10V CP	EA	1.0000	0.0074	0.0074		C410
28-11-4102	CERAMIC CAP 1000P/10V CP C	EA	1.0000	0.0074	0.0074		C106
28-11-4103	CERAMIC CAP .01U/10V CP C	EA	27.0000	0.0074	0.1998		C102 107 1
28-11-4104	CHIP CERAMIC CAP .1U C	EA	3.0000	0.0074	0.0222		C208 404
28-11-4105	CHIP CERAMIC CAP 1U	EA	7.0000	0.0303	0.2121		C201 215 2
28-11-4152	CHIP CERAMIC CAP .0015U 0	EA	1.0000	0.0074	0.0074		C105
28-11-4223	CHIP CERAMIC CAP.022U TDK	EA	1.0000	0.0078	0.0078		C108
28-11-4473	CHIP CERAMIC CAP .047U C	EA	3.0000	0.0076	0.0228		C119 205 4
28-11-4474	CHIP CERAMIC CAP .47U TDK	EA	1.0000	0.0239	0.0239		C213
28-11-4682	CERAMIC CAP 0.0068U CP	EA	1.0000	0.0106	0.0106		C228
28-22-3100	CHIP EC 10U/16V	EA	2.0000	0.0659	0.1318		C103 202
28-22-3101	CHIP ELEC CAP 100U/16V	EA	7.0000	0 0823	0.5761		C114 116 1
28-22-3470	CHIP EC 47U/16V	EA	2.0000	0.0823	0.1646		C101 408
28-22-3479	CHIP EC 4.7U/16V	EA	1.0000	0.0740	0.0740		C401
28-23-3470	CHIP EC 47U/25V	EA	1.0000	0.0867	0.0867		C113
28-24-3100	CHIP EC 10U/35V	EA	3.0000	0.0703	0.2109		C110 120
28-24-3479	CHIP EC 4.7U/35V	EA	1.0000	0.0659	0.0659		C803
28-51-3470	CHIP TAN CAP 47U/10V	EA	1.0000	0.1820	0.1820		C234
TOTAL: (28)					2.0358		
29-32-5001	LED 5D RED	EA	1.0000	0.0390	0.0390		LED
TOTAL: (29)					0.0390		
38-93-0216	CAR CORD (LCD)	EA	1.0000	0.9317	0.9317		
TOTAL: (38)					0.9317		
39-90-0014	SWITCH TRANSFORMER 642	EA	1.0000	0.9403	0.9403		T101
39-91-0014	TRANSFORMER H.V.(6") SMD C	EA	1.0000	1.6900	1.6900		T401
TOTAL: (39)					2.6303		
50-T9-1007	MODEL PLT 642 "OFFROAD"	EA	1.0000	0.0650	0.0650		

代號: BMR28 ** SPARE PARTS LIST ** 頁 次: 4
日期: 98/12/16 印表時間: 11:36
料號: LCM642-0AS007 規格: LCM-642A "OFFROAD" 6.4" LCD M

料品代號	料品規格	單位	單位用量	單價	金額	插件位置	備註
TOTAL: (50)					0.0650		
51-T9-0204	FUNCTION PLT 642 "OFFROAD"	EA	1.0000	0.3423	0.3423		BRI 2孔
TOTAL: (51)					0.3423		
69-21-1705	SCREW TP 1.7% RD+	EA	8.0000	0.0035	0.0280		
69-22-2610	SCREW TP 2.6*10	EA	4.0000	0.0048	0.0192		
69-27-2006	SCREW TP 2*6 FL+	EA	6.0000	0.0035	0.0210		
TOTAL: (69)					0.0682		
85-T9-1001	MAIN PCB 153*63*1.0M/M	EA	1.0000	2.0367	2.0367		
85-T9-1002	CONTROL PCB 91*85*1.0MM	EA	1.0000	1.8633	1.8633		
TOTAL: (85)					3.9000		
87-T9-0101	BREAKET BK 642	EA	1.0000	0.4236	0.4236		
TOTAL: (87)					0.4236		
88-01-0808	LED HOLD 7.5mm	EA	1.0000	0.0217	0.0217		
88-T9-0101	F-CAB GM 642	EA	1.0000	0.4853	0.4853		
88-T9-0201	B-CAB GM 642	EA	1.0000	0.6179	0.6179		
88-T9-0301	KNOB BK 642	EA	1.0000	0.0303	0.0303		
TOTAL: (88)					1.1552		
90-S6-1215	(生管) SERIAL NO LABEL "OF	EA	3.0000	0.0195	0.0585		
90-S8-1006	C-TICK LABEL	EA	0.1700	0.0295	0.0050		
90-S8-2006	TOTAL CARE ALBEL "TEAC"	EA	1.0000	0.0295	0.0295		
90-T9-1007	"生管" BAR CODE ALBEL	EA	0.1700	0.0000	0.0000		
TOTAL: (90)					0.0930		
91-S6-2215	W/C 403A "OFF ROAD"	EA	1.0000	0.1300	0.1300		
91-T9-1007	I/B 642 "OFFROAD"	EA	1.0000	0.3120	0.3120		
TOTAL: (91)					0.4420		
93-T9-1007	G/B 642 "OFFROAD"	EA	1.0000	1.0400	1.0400		
TOTAL: (93)					1.0400		
94-T9-1003	CTN 642 空白 6台裝	EA	0.1700	1.0833	0.1841		
TOTAL: (94)					0.1841		
96-T9-0101	POLYFOAM LCM-642	EA	1.0000	0.4117	0.4117		
TOTAL: (96)					0.4117		

代號: BMR28 ** SPARE PARTS LIST ** 頁 次: 5
日期: 98/12/16 印表時間: 11:36
料號: LCM642-0AS007 規格: LCM-642A "OFFBOAD" 6.4" LCD M

料品代號	料 品 規 格	單位	單位用量	單價	金額	插件位置	備 註
97-01-2622	PE BAG 26*22	KG	0.0030	2.4385	0.0073		
TOTAL: (97)					0.0073		
L:					236.7983		

代號: BMR28　　** SPARE PARTS LIST **　　頁　次: 1
日期: 98/12/16　　印表時間: 11:38
料號: 02T91101　　規格: MAIN PCB ASS'Y 642 N/P

料品代號	料品規格		單位	單位用量	單價	金額	插件位置	備註
04-T9-1101	MAIN PCB ASS'Y 642 N/P		EA	1.0000	0.0000	0.0000		
TOTAL: (04)						0.0000		
10-05-1026	IC FA7610P(N) 8P 窄上	S	EA	1.0000	0.8535	0.8535		IC101
10-15-1005	IC MC14538BDW SOP16		EA	1.0000	0.3900	0.3900		IC401
10-15-1069	IC BU4S069 SMP5 ROHM		EA	1.0000	0.1257	0.1257		IC301
10-20-0129	IC LE3Y31M QFP48 SHARP		EA	1.0000	4.1167	4.1167		IC201
TOTAL: (10)						5.4859		
12-05-5006	X'TAL 4.43MHZ	H	EA	1.0000	0.2835	0.2835		X201
12-05-5008	X'TAL 3.579545MHZ	H	EA	1.0000	0.2600	0.2600		X202
12-62-2001	TR 2SA1037K(B) T146	R	EA	2.0000	0.0272	0.0544		Q202 401
12-63-1001	TR 2SC 3518-ZK CHIP NEC		EA	3.0000	0.4072	1.2216		Q101 403 4
12-63-2002	TR 2SB1073R SMD PNP/PANASO		EA	1.0000	0.1709	0.1709		C405
12-64-1002	TR DTC144EK T146	R	EA	5.0000	0.0341	0.1705		Q201 203 2
TOTAL: (12)						2.1609		
13-65-1002	D MA701A/RB160L-40 CHIP		EA	1.0000	0.1094	0.1094		D103
13-65-1003	D MA152K/DAN 212K CHIP		EA	11.0000	0.0368	0.4048		D102 104 1
13-65-1012	D RS1J CHIP ROHM		EA	1.0000	0.0823	0.0823		D101
TOTAL: (13)						0.5965		
16-62-1000	RESISTOR 0 1/10W CP		EA	10.0000	0.0016	0.0160		R214 222 2
16-62-1100	RESISTOR 10 1/10W CP		EA	1.0000	0.0016	0.0016		R407
16-62-1102	RESISTOR 1K 1/10W CP		EA	6.0000	0.0016	0.0096		R209 235 4
16-62-1103	RESISTOR 10K 1/10W CP		EA	3.0000	0.0016	0.0048		R208 218 4
16-62-1104	RESISTOR 100K 1/10W CP		EA	2.0000	0.0016	0.0032		R248 408
16-62-1105	RESISTOR 1M 1/10W CP		EA	2.0000	0.0016	0.0032		R211 239
16-62-1106	RESISTOR 10M 1/10W CP		EA	1.0000	0.0016	0.0016		R203
16-62-1153	RESISTOR 15K 1/10W CP		EA	3.0000	0.0016	0.0048		R212 232 2
16-62-1154	RESISTOR 150K 1/10W CP		EA	1.0000	0.0016	0.0016		R229
16-62-1183	RESISTOR 18K 1/10W CP (080		EA	2.0000	0.0016	0.0032		R238 243
16-62-1184	RESISTOR 180K 1/10W CP		EA	1.0000	0.0016	0.0016		R102
16-62-1221	RESISTOR 220 1/10W CP		EA	1.0000	0.0016	0.0016		R403
16-62-1222	RESISTOR 2K2 1/10W CP		EA	4.0000	0.0016	0.0064		R108 201 2
16-62-1223	RESISTOR 22K 1/10W CP		EA	8.0000	0.0016	0.0128		R107 213 2
16-62-1273	RESISTOR 27K 1/10W CP		EA	7.0000	0.0016	0.0112		S202 S203 4
16-62-1333	RESISTOR 33K 1/10W CP		EA	1.0000	0.0016	0.0016		R103
16-62-1334	RESISTOR 330K 1/10W CP		EA	2.0000	0.0016	0.0032		R104 240
16-62-1391	RESISTOR 390 1/10W CP		EA	1.0000	0.0016	0.0016		R106
16-62-1393	RESISTOR 39K 1/10W CP		EA	1.0000	0.0016	0.0016		R231
16-62-1394	RESISTOR 390K 1/10W CP		EA	1.0000	0.0016	0.0016		R101
16-62-1470	RESISTER 47 OHM 1/10W CP		EA	2.0000	0.0016	0.0032		R221 250
16-62-1472	RESISTOR 4.7K 1/10W CP		EA	2.0000	0.0016	0.0032		R215 230
16-62-1473	RESISTOR 47K 1/10W CP		EA	1.0000	0.0016	0.0016		R402
16-62-1561	RESISTOR 560 1/10W CP		EA	6.0000	0.0016	0.0096		R206 234 2
16-62-1562	RESISTOR 5K6 1/10W CP		EA	2.0000	0.0016	0.0032		R207 219

代號: BMR28　　** SPARE PARTS LIST **　　頁　次: 2
日期: 98/12/16　　印表時間: 11:38
料號: 02T91101　　規格: MAIN PCB ASS'Y 642 N/P

料品代號	料品規格	單位	單位用量	單價	金額	插件位置	備註
16-62-1563	RESISTOR 56K 1/10W CP	EA	1.0000	0.0016	0.0016		R205
16-62-1682	RESISTOR 6K8 1/10W CP	EA	4.0000	0.0016	0.0064		R204 210 2
16-62-1684	RESISTOR 680K 1/10W CP	EA	1.0000	0.0016	0.0016		R241
16-62-1750	RESISTOR 75 1/10W CP	EA	1.0000	0.0016	0.0016		R202
16-62-1822	RESISTOR 8K2 1/10W CP	EA	4.0000	0.0016	0.0064		R105 220 2
TOTAL: (16)					0.1312		
17-0F-1390	CERAMIC CAP 39P/3KV 5%	EA	1.0000	0.0325	0.0325		C405
17-87-1104	DMFP 0.1U/250V	EA	1.0000	0.0717	0.0717		C403
TOTAL: (17)					0.1042		
18-01-3005	FILTER C TRAP 3.6MHZ TDK N	EA	1.0000	0.6370	0.6370		T201
18-03-3005	FILTER C TRAP 4.4MHZ TDK N	EA	1.0000	0.6370	0.6370		T202
TOTAL: (18)					1.2740		
19-43-2331	CHOKE 0.5A 330UH	EA	3.0000	0.0659	0.1977		L101 102 4
19-81-3270	CHIP CHOKE 27UH 3225 TDK	EA	1.0000	0.0958	0.0958		L201
TOTAL: (19)					0.2935		
21-42-1020B	CHIP SEMI VR 1K RH03A3A13X	EA	1.0000	0.0651	0.0651		S102
21-42-1030B	CHIP SEMI VR 10K RH03A3A14	EA	1.0000	0.0656	0.0656		S101
21-42-4730B	CHIP SEMI VR 47K RH03A3AS4	EA	3.0000	0.0654	0.1962		S204 205 2
TOTAL: (21)					0.3269		
24-56-0280	WAFER 2P 8.0MM JST	EA	1.0000	0.1820	0.1820		W401
24-56-1603	WAFER 16P 1.0M/M D-CP	EA	1.0000	0.3380	0.3380		W201
24-56-2013	WAFER 20P 1.0MM D-CP	EA	1.0000	0.4333	0.4333		W202
TOTAL: (24)					0.9533		
28-11-2101	CERAMIC CAP 100P/10V CP C	EA	1.0000	0.0074	0.0074		C233
28-11-2561	CERAMIC CAP 560P/10V CP	EA	1.0000	0.0074	0.0074		C406
28-11-2681	CERAMIC CAP 680P/10V CP	EA	1.0000	0.0076	0.0076		C203
28-11-2821	CERAMIC CAP 820P/10V CP	EA	1.0000	0.0074	0.0074		C410
28-11-4102	CERAMIC CAP 1000P/10V CP C	EA	1.0000	0.0074	0.0074		C106
28-11-4103	CERAMIC CAP .01U/10V CP C	EA	25.0000	0.0074	0.1850		C102 107 1
28-11-4104	CHIP CERAMIC CAP .1U C	EA	2.0000	0.0074	0.0148		C208 404
28-11-4105	CHIP CERAMIC CAP 1U	EA	7.0000	0.0303	0.2121		C201 215 2
28-11-4152	CHIP CERAMIC CAP .0015U 0	EA	1.0000	0.0074	0.0074		C105
28-11-4223	CHIP CERAMIC CAP.022U TDK	EA	1.0000	0.0078	0.0078		C108
28-11-4473	CHIP CERAMIC CAP .047U C	EA	3.0000	0.0076	0.0228		C119 205 4
28-11-4474	CHIP CERAMIC CAP .47U TDK	EA	1.0000	0.0239	0.0239		C213
28-11-4682	CERAMIC CAP 0.0068U CP	EA	1.0000	0.0106	0.0106		C228
28-22-3100	CHIP EC 10U/16V	EA	2.0000	0.0659	0.1318		C103 202
28-22-3101	CHIP ELEC CAP 100U/16V	EA	6.0000	0.0823	0.4938		C114 116 1
28-22-3470	CHIP EC 47U/16V	EA	2.0000	0.0823	0.1646		C101 408

代號: BMB28 ** SPARE PARTS LIST ** 頁 次: 3
日期: 98/12/16 印表時間: 11:38
料號: 02T91101 規格: MAIN PCB ASS'Y 642 N/P

料品代號	料 品 規 格	單位	單位用量	單價	金額	插件位置	備 註
28-22-3479	CHIP EC 4.7U/16V	EA	1.0000	0.0740	0.0740		C401
28-23-3470	CHIP EC 47U/25V	EA	1.0000	0.0867	0.0867		C113
28-24-3100	CHIP EC 10U/35V	EA	2.0000	0.0703	0.1406		C110 120
28-51-3470	CHIP TAN CAP 47U/10V	EA	1.0000	0.1820	0.1820		C254
-TOTAL: (28)					1.7951		
39-90-0014	SWITCH TRANSFORMER 642	EA	1.0000	0.9403	0.9403		T101
39-91-0014	TRANSFORMER H.V.(6") SMD C	EA	1.0000	1.6900	1.6900		T401
-TOTAL: (39)					2.6303		
85-T9-1001	MAIN PCB 153*63*1.0M/M	EA	1.0000	2.0367	2.0367		
-TOTAL: (85)					2.0367		
AL:					17.7885		

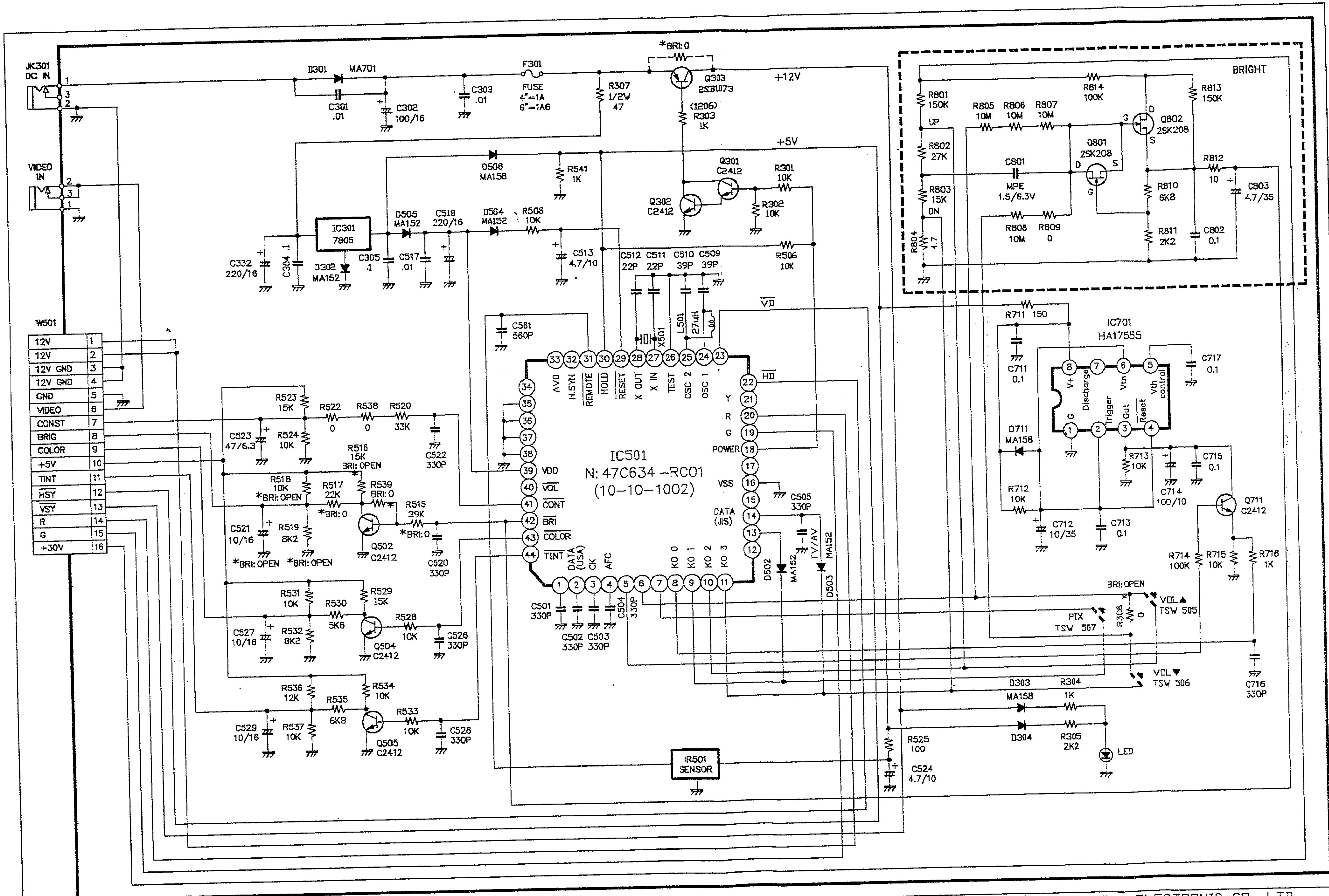

SUBFIX	MOD RECORD
AA	1997/12/16
AB	
AC	
AD	
AE	

ACTION ELECTRONIS CO., LTD.
信誓電子股份有限公司

TITLE: LCM-641/642 SCHEMATIC DIAGRAM (CONTROL)

DRAWN	CHECK	APPROVED	DRAWING NO	REV
曾美華			05-T9-1101	0
				SH3

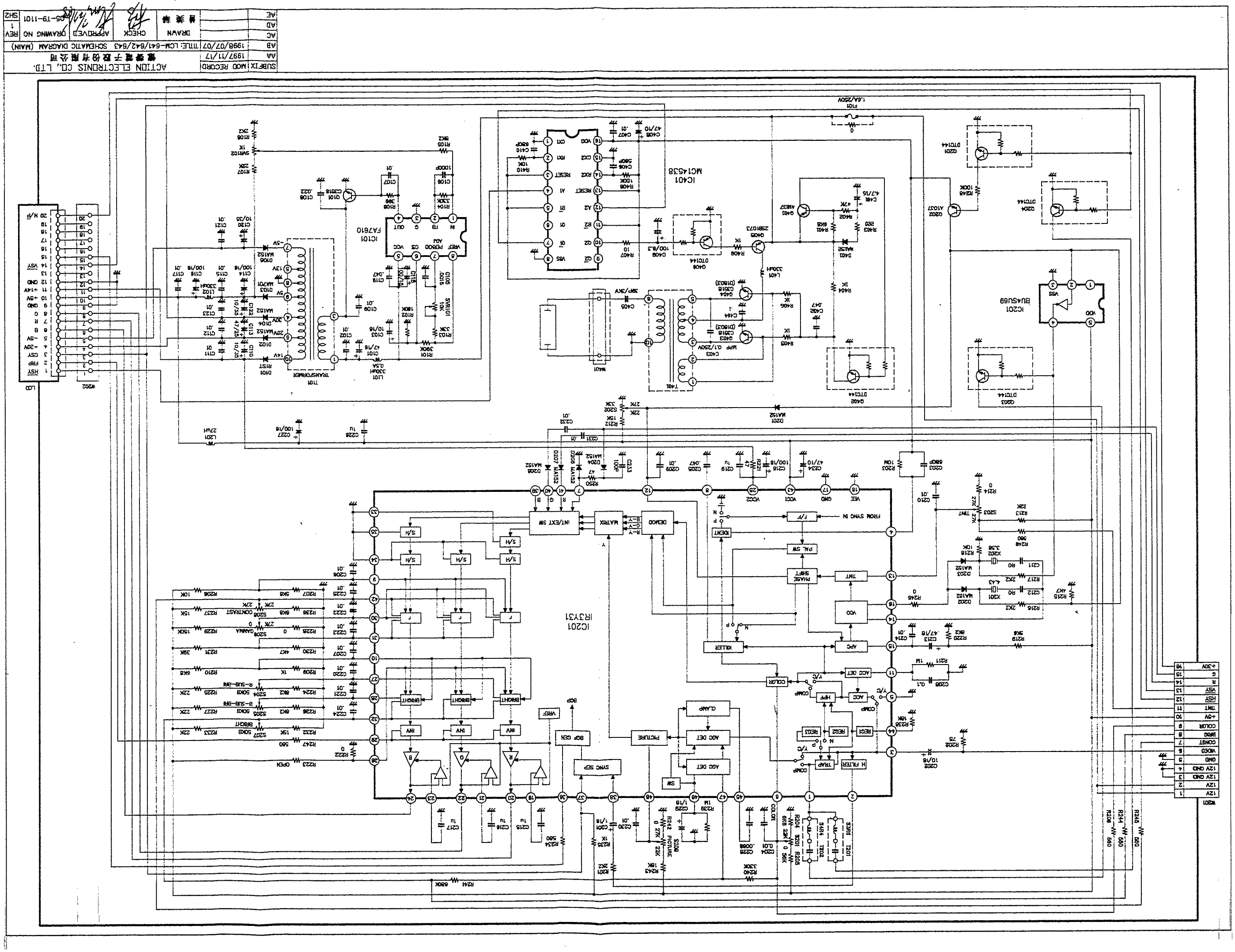
IC201
IR3Y31
IC401
MC14538
IC101
FA7610
IC201
BU4SU69
T101
TRANSFORMER
T401
M401
M201
M202
LCD
FROM SYNC IN
MATRIX
DEMOD
INT/EXT SW
PHASE SHIFT
PAL SW
IDENT
VCO
APC
KILLER
ACC DET
COLOR
HPF
BRIGHT
CONTRAST
PICTURE
CLAMP
SYNC SEP
BGP GEN
H FILTER
TRAP
SW
S/H
INV
VREF
SUBFIX
MOD RECORD
AA 1997/11/17
AB 1998/07/07
AC
AD
AE
ACTION ELECTRONIS CO., LTD.
東陽電子股份有限公司
TITLE: LCM-641/642/643 SCHEMATIC DIAGRAM (MAIN)
DRAWN
CHECK
APPROVED
DRAWING NO
05-19-1101
REV
1
SH2