LG TRAINING CENTER

1080P
Direct View LCD
Training

47LE8500

LED Backlights

NetCast ENTERTAINMENT ACCESS

LG
Life's Good

LCD-DV Troubleshooting
47" Class Full HD 1080P
LCD TV (47" diagonally)

wireless
1080p Ready

Published July 23, 2010
Updated August 3rd, 2010

OUTLINE

Preliminary Section:

Contact Information, Preliminary Matters, Specifications,
LCD Overview, General Troubleshooting Steps,
Signal Distribution, Disassembly Instructions and Voltages

Disassembly Section: Removal of Circuit Boards

Troubleshooting Section: Board Operation Troubleshooting of :

- Switch Mode Power Supply
- **Inverter Boards Main and Secondary (LED Backlight Drivers)**
- Main Board
- **Extension Boards**
- **Ft Control Board**
- **Soft Touch Keys**
- **Speakers**

47LE8500 LCD Direct View Display

Section 1

This Section will cover Contact Information and remind the Technician of Important Safety Precautions for the Customers Safety as well as the Technician and the Equipment.

Basic Troubleshooting Techniques which can save time and money sometimes can be overlooked. These techniques will also be presented.

This Section will get the Technician familiar with the Disassembly, Identification and Layout of the LCD Display Panel.

At the end of this Section the Technician should be able to Identify the Circuit Boards and have the ability and knowledge necessary to safely remove and replace any Circuit Board or Assembly.

IMPORTANT SAFETY NOTICE

The information in this training manual is intended for use by persons possessing an adequate background in electrical equipment, electronic devices, and mechanical systems. In any attempt to repair a major Product, personal injury and property damage can result. The manufacturer or seller maintains no liability for the interpretation of this information, nor can it assume any liability in conjunction with its use. When servicing this product, under no circumstances should the original design be modified or altered without permission from LG Electronics. Unauthorized modifications will not only void the warranty, but may lead to property damage or user injury. If wires, screws, clips, straps, nuts, or washers used to complete a ground path are removed for service, they must be returned to their original positions and properly fastened.

CAUTION

To avoid personal injury, disconnect the power before servicing this product. If electrical power is required for diagnosis or test purposes, disconnect the power immediately after performing the necessary checks. Also be aware that many household products present a weight hazard. At least two people should be involved in the installation or servicing of such devices. Failure to consider the weight of an product could result in physical injury.

ESD Notice (Electrostatic Static Discharge)

Today's sophisticated electronics are electrostatic discharge (ESD) sensitive. ESD can weaken or damage the electronics in a manner that renders them inoperative or reduces the time until their next failure. Connect an ESD wrist strap to a ground connection point or unpainted metal in the product. Alternatively, you can touch your finger repeatedly to a ground connection point or unpainted metal in the product. Before removing a replacement part from its package, touch the anti-static bag to a ground connection point or unpainted metal in the product. Handle the electronic control assembly by its edges only. When repackaging a failed electronic control assembly in an anti-static bag, observe these same precautions.

Regulatory Information

This equipment has been tested and found to comply with the limits for a Class B digital device, pursuant to Part 15 of the FCC Rules. These limits are designed to provide reasonable protection against harmful interference when the equipment is operated in a residential installation. This equipment generates, uses, and can radiate radio frequency energy, and, if not installed and used in accordance with the instruction manual, may cause harmful interference to radio communications. However, there is no guarantee that interference will not occur in a particular installation. If this equipment does cause harmful interference to radio or television reception, which can be determined by turning the equipment off and on, the user is encouraged to try to correct the interference by one or more of the following measures: Reorient or relocate the receiving antenna; Increase the separation between the equipment and the receiver; Connect the equipment to an outlet on a different circuit than that to which the receiver is connected; or consult the dealer or an experienced radio/TV technician for help.

LG Contact Information

Customer Service (and Part Sales)	**(800) 243-0000**
Technical Support (and Part Sales)	**(800) 847-7597**
USA Website (GSFS)	**http://gsfs-america.lge.com**
Customer Service Website	**us.lgservice.com**
Knowledgebase Website	**lgtechassist.com** ← New: Software Downloads Technical Assistance
LG Web Training	**lge.webex.com** ← Presentations with Audio/Video and Screen Marks
LG CS Academy	**lgcsacademy.com** ← **http://136.166.4.200**

LCD-DV:	**32LG40, 32LH30, 37LH55, 42LG60, 42LG70, 42LH20, 42LH40, 42LH50, 42LH90, 42SL80, 47LG90, 47LH85, 47LE8500**
PLASMA:	**42PG20, 42PQ20, 42PQ30, 50PG20, 50PJ350, 50PK750, 50PS80, 50PS60, 60PK750, 60PS11, 60PS60, 60PS80**

Also available on the Plasma Page:
PDP Panel Alignment Handbook, Schematics with Bookmarks
Plasma Control Board ROM Update (Jig required)

New Training Materials on the Learning Academy site

Published July 2010 by LG Technical Support and Training
LG Electronics Alabama, Inc.
201 James Record Road, Huntsville, AL, 35813.

Safety and Handling Regulations

1. Approximately 20 minute pre-run time is required before making any picture performance adjustments from the Menu.
2. Refer to the Voltage/Current silk screening on the Switch Mode Power Supply.
3. C-MOS circuits are sensitive to static electricity.
   Use caution when dealing with these IC and circuits.
4. Exercise care when making voltage and waveform checks to prevent costly short circuits from damaging the unit.
5. Be cautious of lost screws and other metal objects to prevent a possible short in the circuitry.

Checking Points to be Considered

1. Check the appearance of the Replacement Panel and Circuit Boards for both physical damage and part number accuracy.
2. Check the model label. Verify model names and board model matches.
3. Check details of defective condition and history. Example: Oscillator failure dead set, etc…

Basic Troubleshooting Steps

Define, Localize, Isolate and Correct

•**Define** Look at the symptom carefully and determine what circuits could be causing the failure. Use your senses Sight, Smell, Touch and Hearing. Look for burned parts and check for possible overheated components. Capacitors will sometimes leak dielectric material and give off a distinct odor. Frequency of power supplies will change with the load, or listen for relay closing etc. Observation of the front Power LED may give some clues.

•**Localize** After carefully checking the symptom and determining the circuits to be checked and after giving a thorough examination using your senses the first check should always be the DC Supply Voltages to those circuits under test. Always confirm the supplies are not only the proper level but be sure they are noise free. If the supplies are missing check the resistance for possible short circuits.

•**Isolate** To further isolate the failure, check for the proper waveforms with the Oscilloscope to make a final determination of the failure. Look for correct Amplitude Phasing and Timing of the signals also check for the proper Duty Cycle of the signals. Sometimes “glitches” or “road bumps” will be an indication of an imminent failure.

•**Correct** The final step is to correct the problem. Be careful of ESD and make sure to check the DC Supplies for proper levels. Make all necessary adjustments and lastly always perform a Safety AC Leakage Test before returning the product back to the Customer.

47LE8500 PRODUCT INFORMATION SECTION

This section of the manual will discuss the specifications of the
47LE8500
LCD Direct View Display

Wireless Media Box (Sold Separately)

The Wireless Media box communicates to the television via a wireless receiver called a "Dongle". The Dongle attaches to the Television via two connections:

1. HDMI Cable from the Dongle to the TV to transfer Audio and Video Signals.
2. Wired Remote cable between the TV and Dongle for Control Functions.

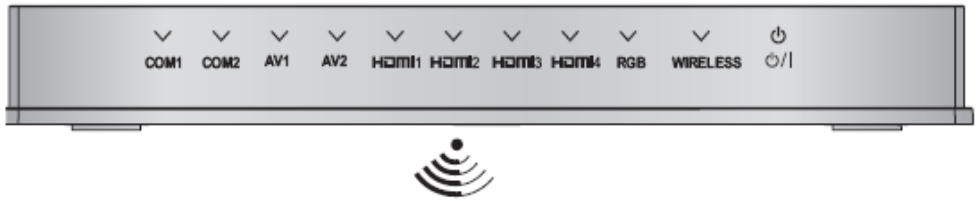

Media Box

Wired Remote to control the Media Box

TV A/V Inputs

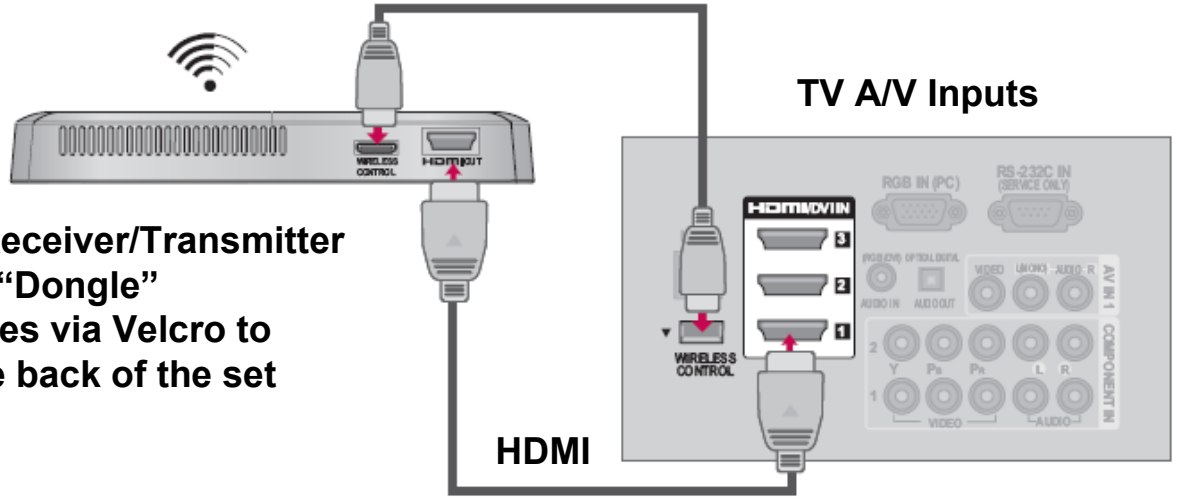

Wireless Receiver/Transmitter "Dongle" Attaches via Velcro to the back of the set

HDMI

Wireless LAN (Sold Separately)

Using the LG Wireless LAN for Broadband/[1]DLNA Adaptor, which is sold separately, allows the TV to connect to a wireless LAN network. The DLNA adaptor attaches to the Television via either of the two USB connections:

[1](DLNA: Digital Living Network Alliance)

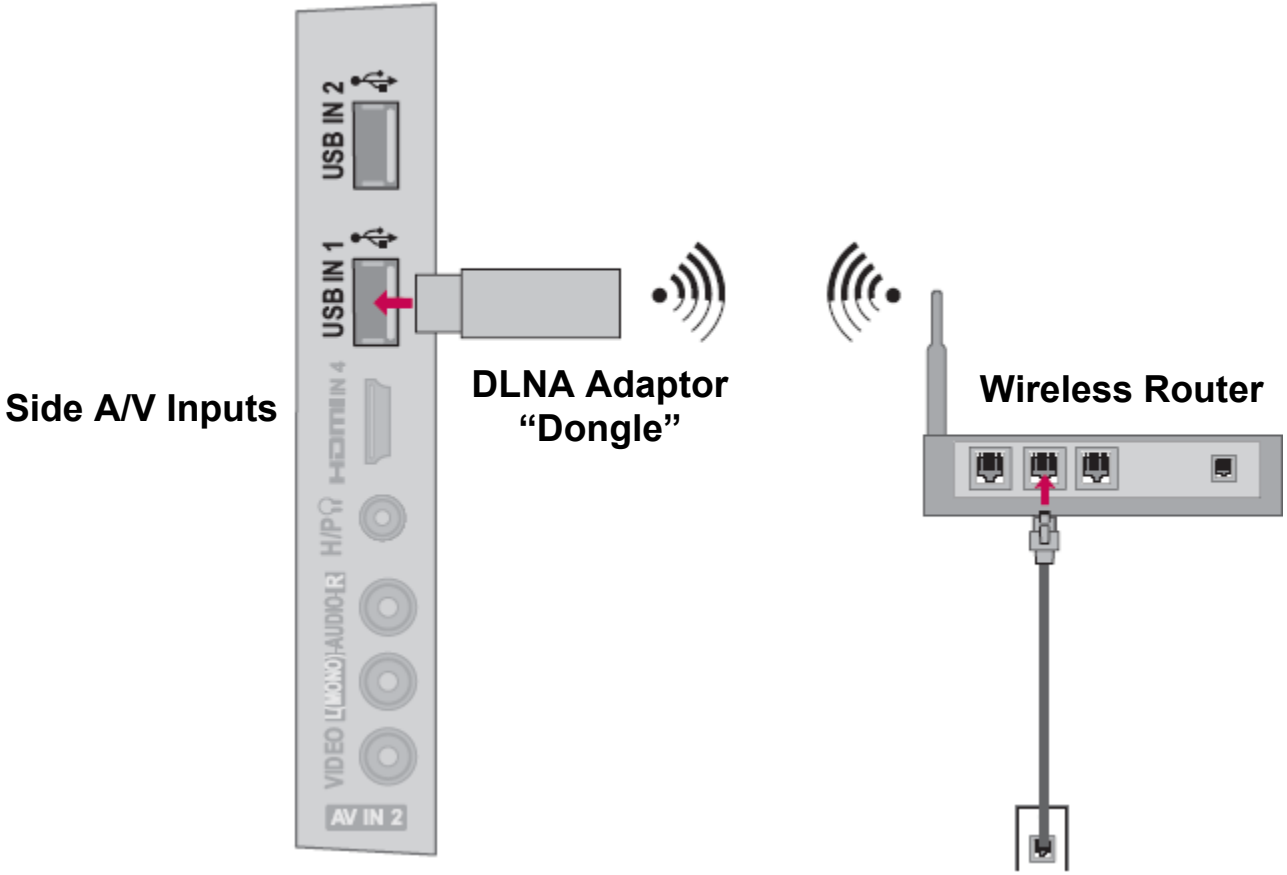

Key TV Features

- INFINIA Series*
- Full LED Slim w/Local Dimming
- THX Certified Display
- NetCast™ Entertainment Access* (Wi-Fi® Ready)
- Wireless 1080p Ready*
- DLNA Certified®
- TruMotion 240Hz
- Full HD 1080p Resolution
- 9M:1 Dynamic Contrast Ratio
- Seamless Design
- Picture Wizard II (Easy Picture Calibration)
- Smart Energy Saving
- ENERGY STAR® Qualified
- XD Engine
- Intelligent Sensor
- AV Mode II (Cinema, Sports, Game)
- Clear Voice II
- ISFccc® Ready
- 24P Real Cinema
- USB 2.0 (JPEG, MP3, DivX HD)
- DivX® HD
- 4 HDMI™ V.1.3 w/Deep Color
- SIMPLINK™ Connectivity
- Dolby® Digital 5.1 Decoder
- Infinite Sound

47LE8500 Logo Familiarization Page 1 of 4

New definition television. LG's INFINIA TVs are redefining home entertainment. Even beyond their jaw-dropping design, they offer access to virtually unlimited entertainment through broadband connectivity and freedom with wireless HD capability.

You don't have to take our word for it that this is an amazing TV. To earn THX certification, our TV's passed more than 30 rigorous tests, ensuring you're bringing an uncompromised HD experience home - as the director wanted it.

Entertainment on tap. NetCast Entertainment Access brings the best Internet services direct to your TV—no computer required. Instantly access movies and TV shows, news and weather and the world's largest library of HD movies in 1080p.

47LE8500 Logo Familiarization Page 2 of 4

FULL HD RESOLUTION 1080P HD Resolution Pixels: 1920 (H) × 1080 (V)
Enjoy twice the picture quality of standard HDTV with almost double the pixel resolution. See sharper details like never before. Just imagine a Blu-ray disc or video game seen on your new LG Full HD 1080p TV.

HDMI (1.3 Deep Color) Digital multi-connectivity
HDMI (1.3 Deep color) provides a wider bandwidth (340MHz, 10.2Gbps) than that of HDMI 1.2, delivering a broader range of colors, and also drastically improves the data-transmission speed.

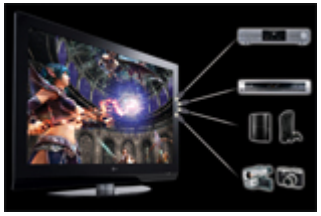

Invisible Speaker
Personally tuned by Mr. Mark Levinson for LG
TAKE IT TO THE EDGE newly introduces 'Invisible Speaker' system, guaranteeing first class audio quality personally tuned by Mr. Mark Levinson, world renowned as an audio authority. It provides Full Sweet Spot and realistic sound equal to that of theaters with its Invisible Speaker.

Dual XD Engine
Realizing optimal quality for all images
One XD Engine optimizes the images from RF signals as another XD Engine optimizes them from External inputs. Dual XD Engine presents images with optimal quality two times higher than those of previous models.

47LE8500 Logo Familiarization Page 3 of 4

AV Mode "One click" Cinema, THX Cinema, Sport, Game mode.
TAKE IT TO THE EDGE is a true multimedia TV with an AV Mode which allows you to choose from 4 different modes of Cinema, Sports and Game by a single click of a remote control.

Clear Voice Clearer dialogue sound
Automatically enhances and amplifies the sound of the human voice frequency range to provide high-quality dialogue when background noise swells.

Save Energy, Save Money
It reduces the plasma display's power consumption.
The default factory setting complies with the Energy Star requirements and is adjusted to the comfortable level to be viewed at home.
(Turns on Intelligent Sensor).

Save Energy, Save Money
Home electronic products use energy when they're off to power features like clock displays and remote controls. Those that have earned the ENERGY STAR use as much as 60% less energy to perform these functions, while providing the same performance at the same price as less-efficient models. Less energy means you pay less on your energy bill. Draws less than 1 Watt in stand by.

47LE8500 Logo Familiarization Page 4 of 4

Wireless Ready
Wireless 1080p Connectivity lets you cut loose from messy wires and still get a stunning Full HD picture. Disclaimer: Wireless media kit required and sold separately.

Picture Wizard
Get easy self-calibration with on-screen reference points for key picture quality elements such as black level, color, tint, sharpness and backlight levels. Take the guesswork out of picture adjustments with this simple-to-use feature. It's not actually magic, but it will sure seem that way.

Seamless Design
You'll love the stunning picture while it's on and marvel at its appearance while it's off. The display is a seamless, edge-to-edge panel of glass over an ultra-slim, almost unnoticeable bezel. It's a sleek, elegant, virtually border-free design that will appeal to even the most refined sense of style.

TruMotion 240Hz
See sports, video games and high-speed action with virtually no motion blur and in crystal clarity with LG's TruMotion 240Hz technology. Now your TV can keep up with the fastest moving scenes.

47LE8500 Remote Control

p/n AKB72914003

TOP PORTION

BOTTOM PORTION

Accessing the Service Menu

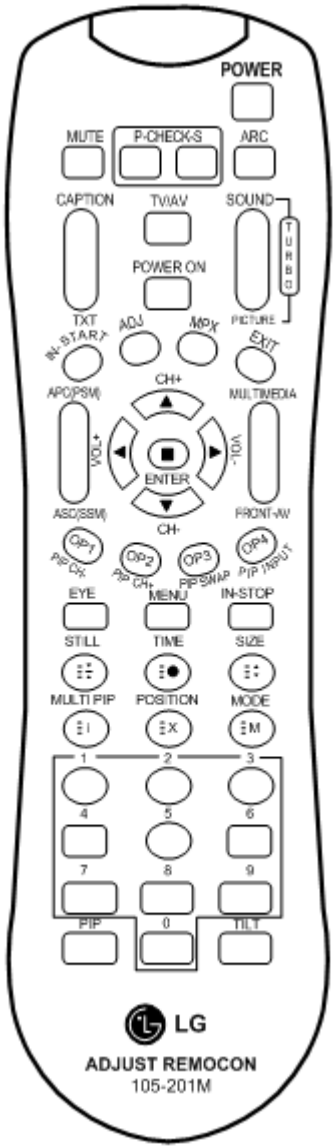

105-201M

To access the Service Menu.

1) **You must have either Service Remote. p/n 105-201M or p/n MKJ39170828**
2) **Press "In-Start"**
3) **A Password screen appears.**
4) **Enter the Password.**

Note: A Password is required to enter the Service Menu. Enter; **0000**

Note: If **0000** does not work use **0413.**

MKJ39170828

TV Rear Input / Output Jacks

USB1 or USB2 for Software Upgrades, Wireless Dungle, Music and Photos

Side In/Out

Rear In/Out Jacks

LAN

Wireless Media Box Remote Jack

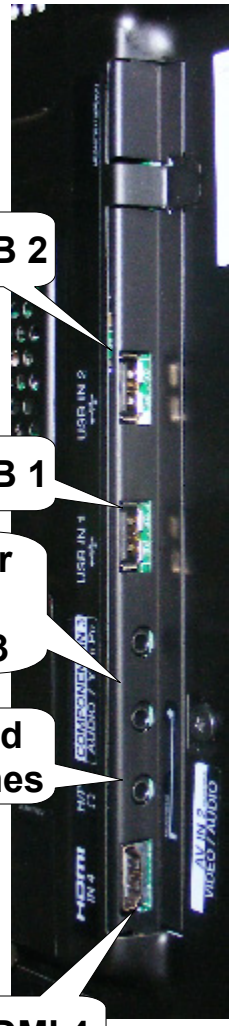

USB 2

USB 1

Component or Composite Video/Audio 3

Head Phones

HDMI 4

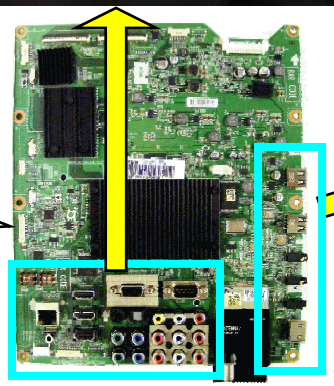

MAIN BOARD Rear and Side Input/Output locations

Software Updates (New and Changed Functions)

A wireless Internet Connection will work for Automatic Software Downloads., however if there are problems completing download, a Wired Internet Connection is preferred

For network setup assistance, press the green button for the Simple Manual

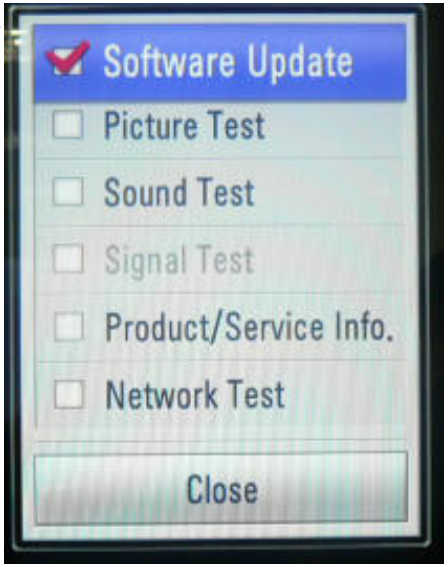

Bring up the Customer's Menu then Press the Red button on Remote

With Software Update Highlighted, Press Select on Remote

Scroll down to item 9 Network Connections

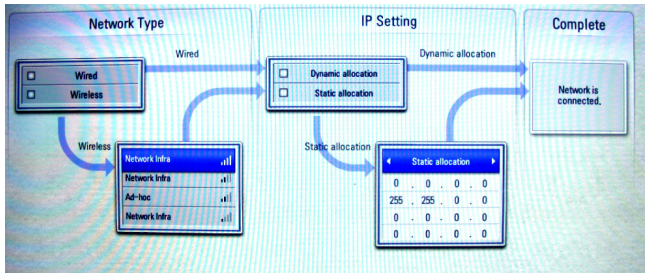

Continue on next page

Software Updates (New and Changed Functions) Continued

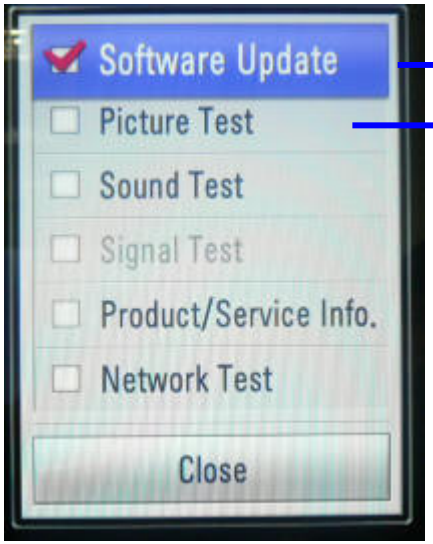

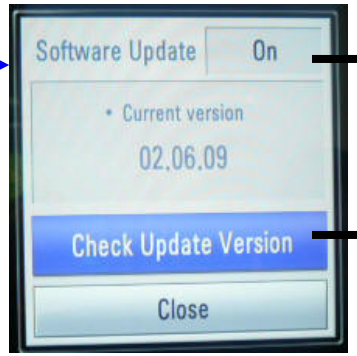

Automatic Internet Software Update
- Off : Automatic Software update does not work
- On : if new Software released, Software download notice appears at turn on with two choices, Yes and Remind Me Later.

Check Update version
- comparison current software version and Released software version

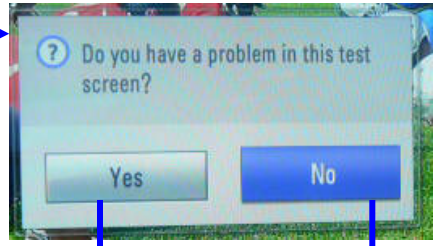

Additional TV Checks can be made by Scrolling down.
Picture, Sound and Network Test

After completion of the test, a Pop up menu is displayed with preloaded back ground picture. Select NO if everything is OK.

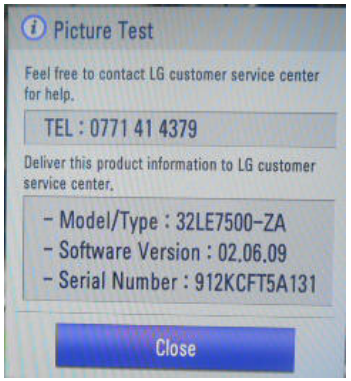

If you select Yes;
Service call number, Model name, SW version and serial No. is displayed.
Note: Confirm the “Suffix” of the model number.

If the Main board is replaced, the Model and Serial number must be reinserted into memory. See Model Number D/L.

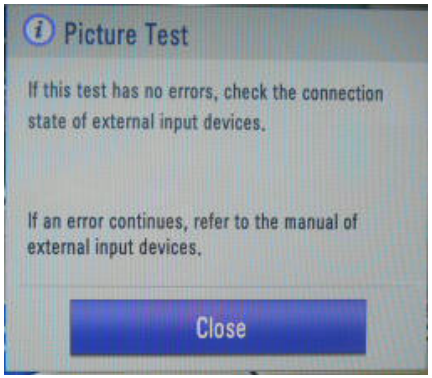

USB Automatic Software Download Instructions

1) Create an LG_DTV folder on the USB Flash Drive

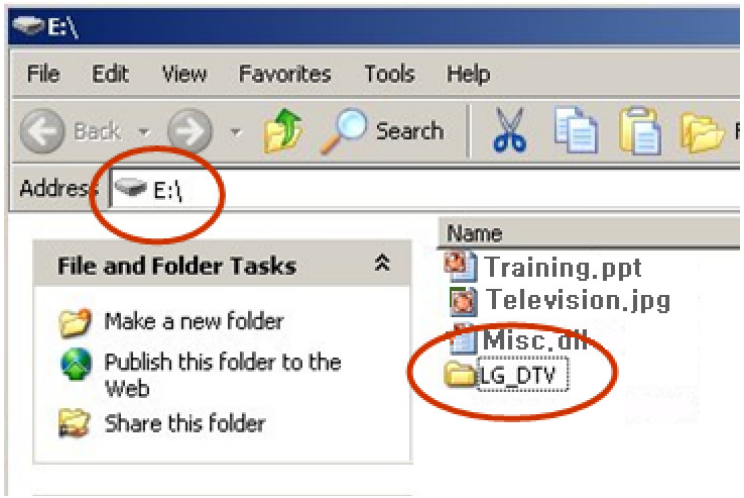

2) Copy new software (xxx.epk) to "LG_DTV" folder. Make sure to have correct software file.
3) With TV turned on, insert USB flash drive.
4) You can see the message "TV Software Upgrade" (See figure to right)
5) Cursor left and highlight "START" Button and push "Enter" button using the remote control.
6) You can see the download progress Bar.
7) Do not unplug until unit has automatically restarted.
8) When download is completed, you will see "COMPLETE".
9) Your TV will be restarted automatically.

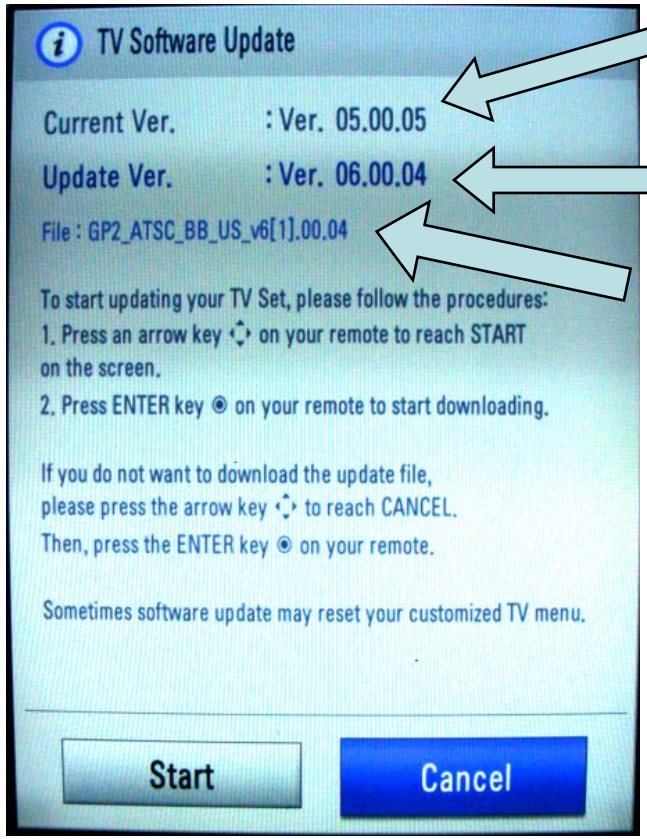

Currently Installed Version

Software Version found on the USB Flash Drive

File found on the USB Flash Drive

*** CAUTION:**
Do not remove AC power or the USB Flash Drive. Do not turn off Power, during the upgrade process.

Software Files are now available from LGTechassist.com

Manual Software Download:

Prepare the Jump Drive as described in the “USB Automatic Download” section and insert it into either of the USB ports.
Bring up the Customer’s Menu and scroll to “OPTIONS”.
Press the “FAV” key 7 times to bring up the Manual Download Screen.

Highlight the Software update file and press “SELECT” to begin the download process.

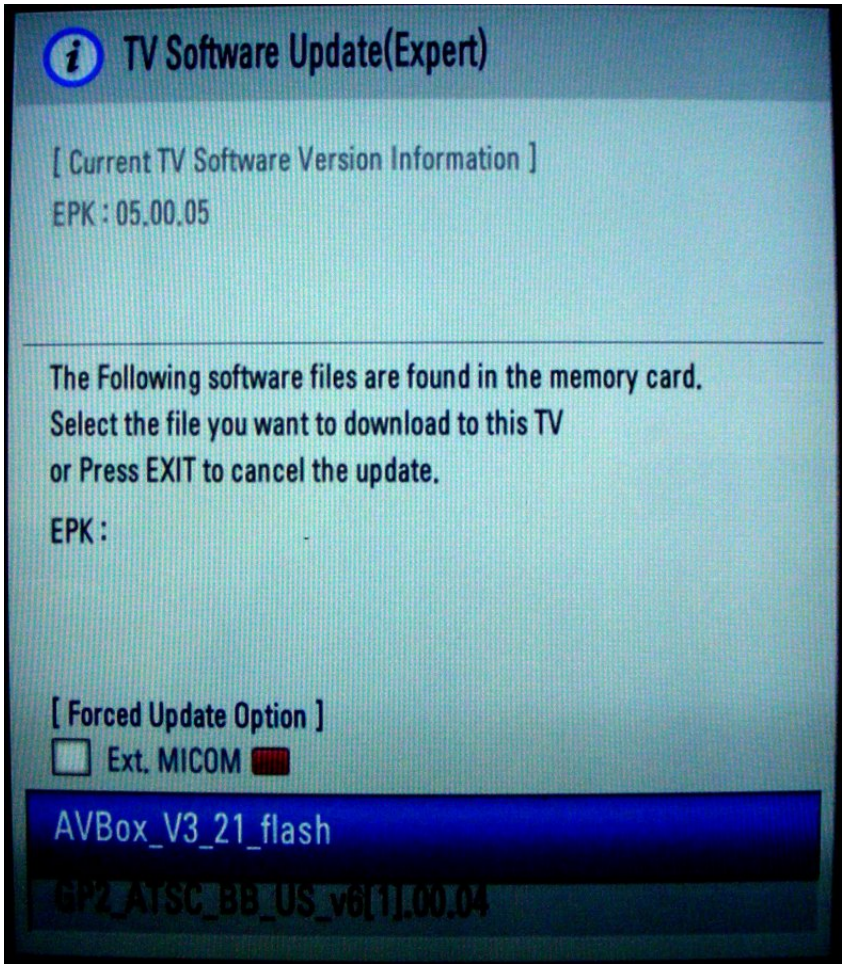

Example of files found
On the Jump Drive

WARNING:
Use extreme Caution when using the Manual “Forced” Download Menu. Any file can be downloaded when selected and may cause the Main board to become inoperative if the incorrect file was selected.

Service Menu: Adding the Model and Serial Number

Bring up the Service Menu using the Service Remote.
Scroll down to item 6. Model Number D/L to highlight.
Press “Select” or “Cursor Right”.

Change the Model and Serial Number to match.
To Change the Model Number
Use the cursor right or left to select the area to change. Use the cursor up or down to change.
Cursor right until there is no text cursor blinking.
Scroll down to highlight “Serial Number” and change.

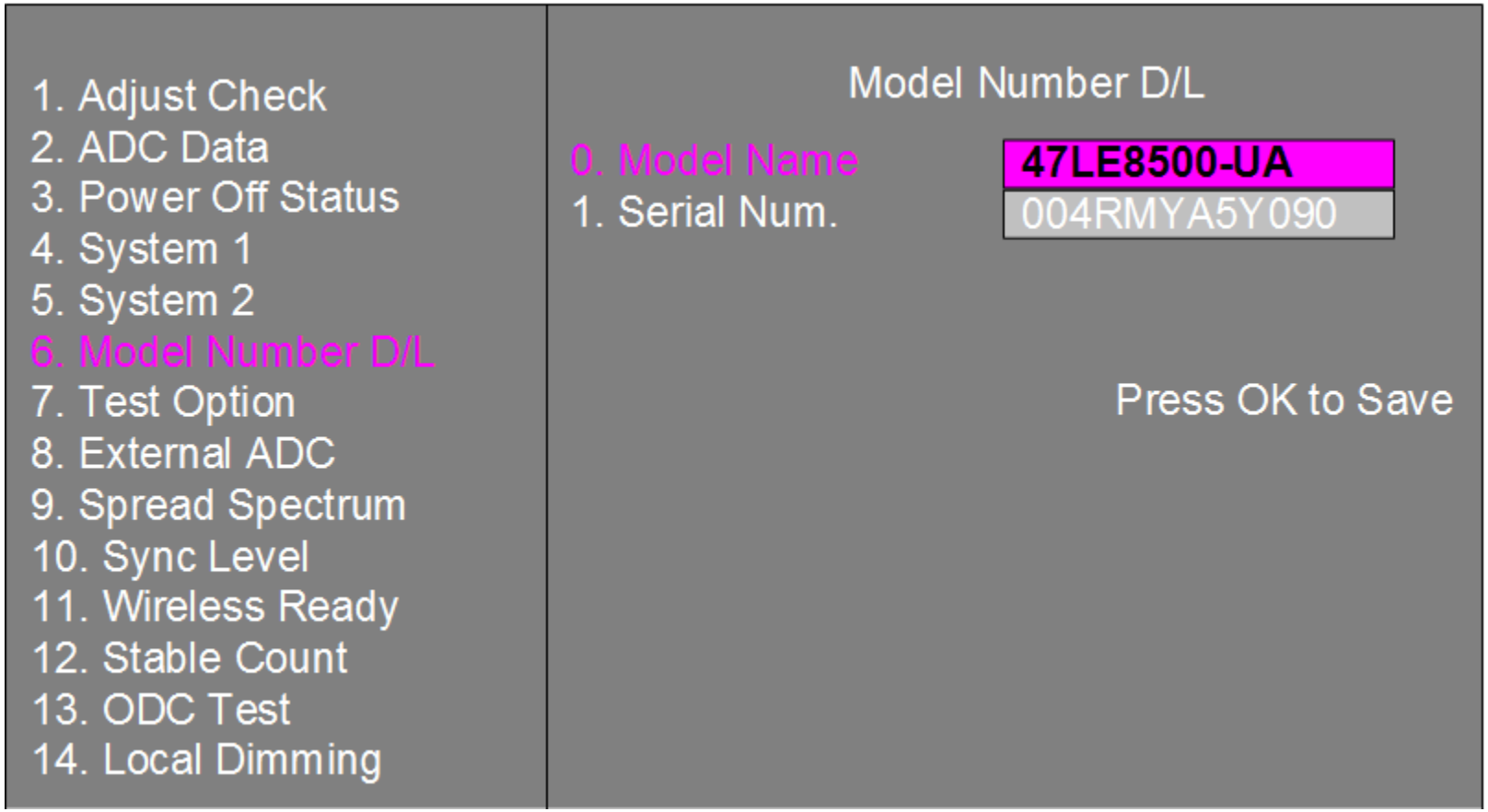

Service Menu: Downloading EDID Data Pg 1 of 2

1) Press "ADJ" key.

2) Select menu,
Either "PCM EDID D/L" or AC3 EDID D/L

EZ ADJUST

0. Tool Option1
1. Tool Option2
2. Tool Option3
3. Tool Option4
4. Tool Option5
5. Country Group
6. ADC Calibration
7. White Balance
8. 10 Point WB
9. Test Pattern
10. PCM EDID D/L
11. AC3 EDID D/L
12. Sub B/C

EZ ADJUST

0. Tool Option1
1. Tool Option2
2. Tool Option3
3. Tool Option4
4. Tool Option5
5. Country Group
6. ADC Calibration
7. White Balance
8. 10 Point WB
9. Test Pattern
10. PCM EDID D/L
11. AC3 EDID D/L
12. Sub B/C

EZ ADJUST

0. Tool Option1
1. Tool Option2
2. Tool Option3
3. Tool Option4
4. Tool Option5
5. Country Group
6. ADC Calibration
7. White Balance
8. 10 Point WB
9. Test Pattern
10. PCM EDID D/L
11. AC3 EDID D/L
12. Sub B/C

Service Menu: Downloading EDID Data Pg 2 of 2

3) Highlight "Start" then Press "Select" key.

4) When Writing appears Downloading in progress

5) Downloading Complete

When PCM EDID D/L was selected

PCM EDID D/L	
HDMI1	NG
HDMI2	NG
HDMI3	NG
RGB	NG
Start	Reset

PCM EDID D/L	
HDMI1	Writing...
HDMI2	Writing...
HDMI3	Writing...
RGB	Writing...
Start	Reset

PCM EDID D/L	
HDMI1	OK/(PCM)
HDMI2	OK/(PCM)
HDMI3	OK/(PCM)
RGB	OK/(PCM)
Start	Reset

When AC3 EDID D/L was selected

AC3 EDID D/L	
HDMI1	NG
HDMI2	NG
HDMI3	NG
RGB	NG
Start	Reset

AC3 EDID D/L	
HDMI1	Writing...
HDMI2	Writing...
HDMI3	Writing...
RGB	Writing...
Start	Reset

AC3 EDID D/L	
HDMI1	OK/(AC3)
HDMI2	OK/(AC3)
HDMI3	OK/(AC3)
RGB	OK/(AC3)
Start	Reset

Note: When PCM is downloaded, AC3 will be N/G and when AC3 is downloaded PCM will be N/G. This means that when PCM is OK, PCM audio is priority and when AC3 is OK, AC3 audio is priority.

47LE8500 Product Dimensions

Wattage
Local Dimming 90W
Full White 130W
Stand By 0.1W

There must be at least 4 inches of Clearance on all sides

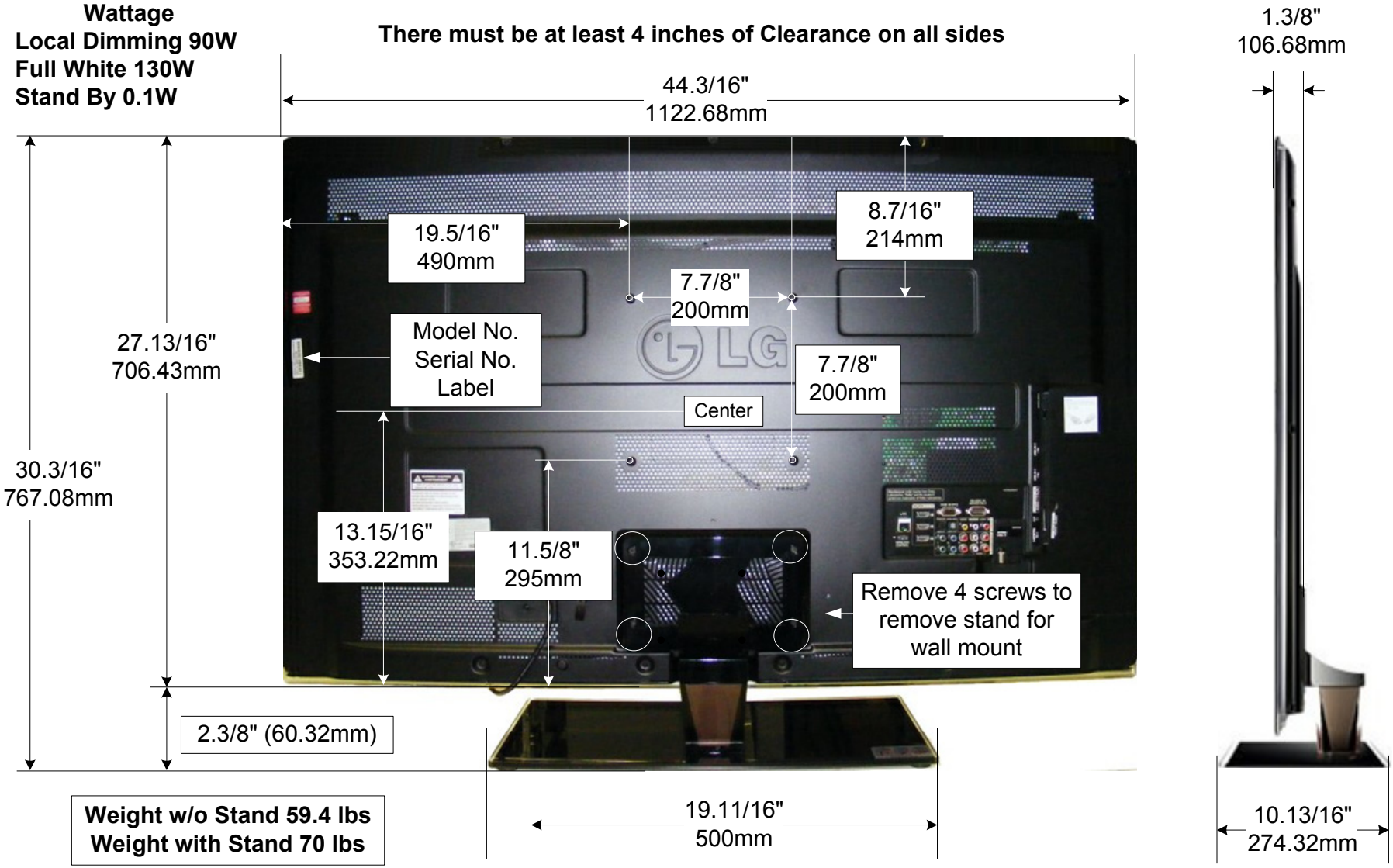

Weight w/o Stand 59.4 lbs
Weight with Stand 70 lbs

Disassembly:

This section of the manual will discuss Disassembly, Layout (Circuit Board Identification) of the 47LE8500 LCD Direct View Television.

Upon completion of this section the Technician will have a better understanding of the disassembly procedures, the layout of the printed circuit boards and be able to identify each board.

Removing the Back Cover

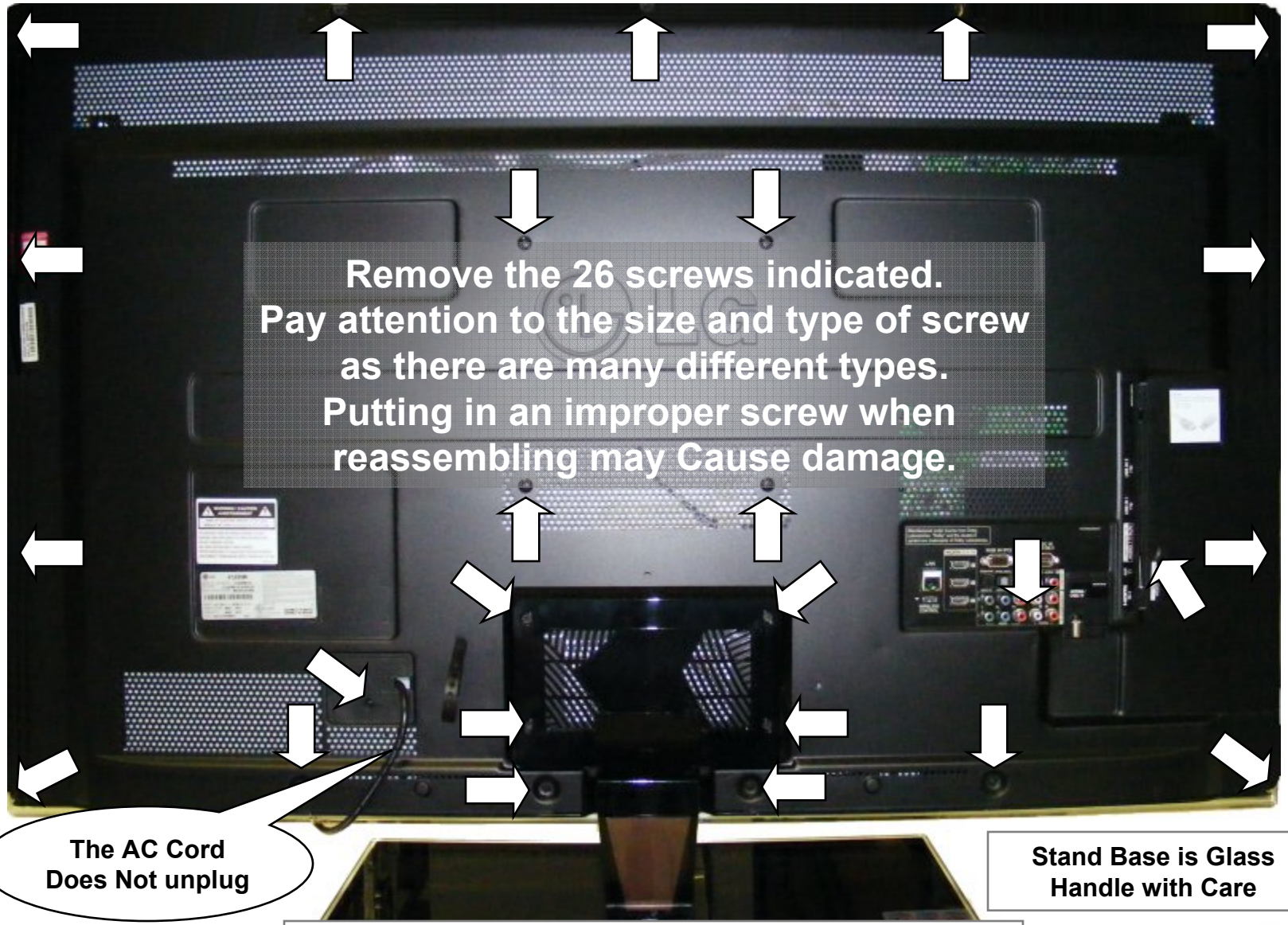

The AC Cord Does Not unplug

Stand Base is Glass Handle with Care

The Stand has to be removed before removing the back.

Circuit Board Layout

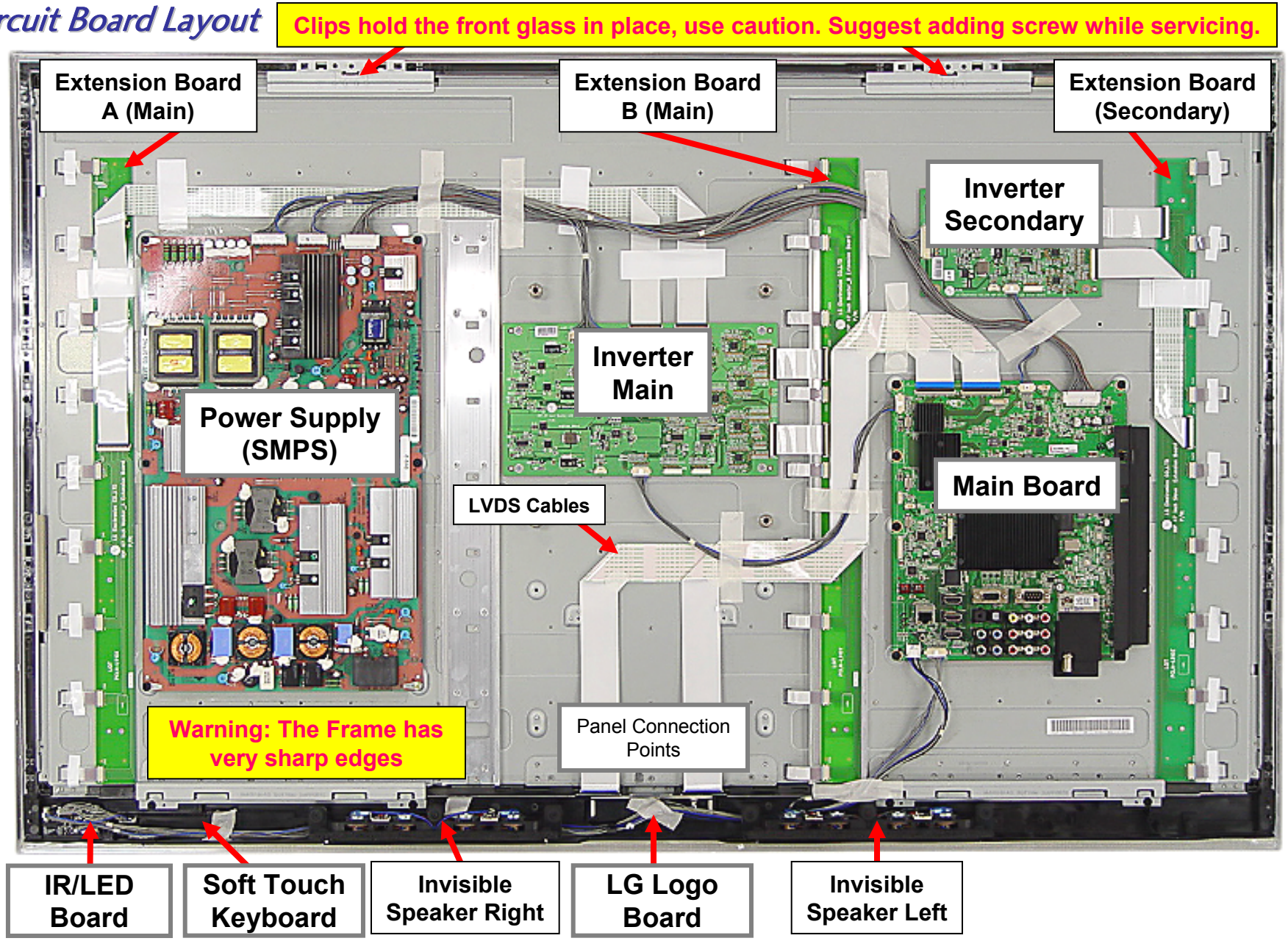

47LE8500 Connector Identification Diagram

If the Panel is replaced, reset the UTTTime.
Service Menu, System 1 Item 12

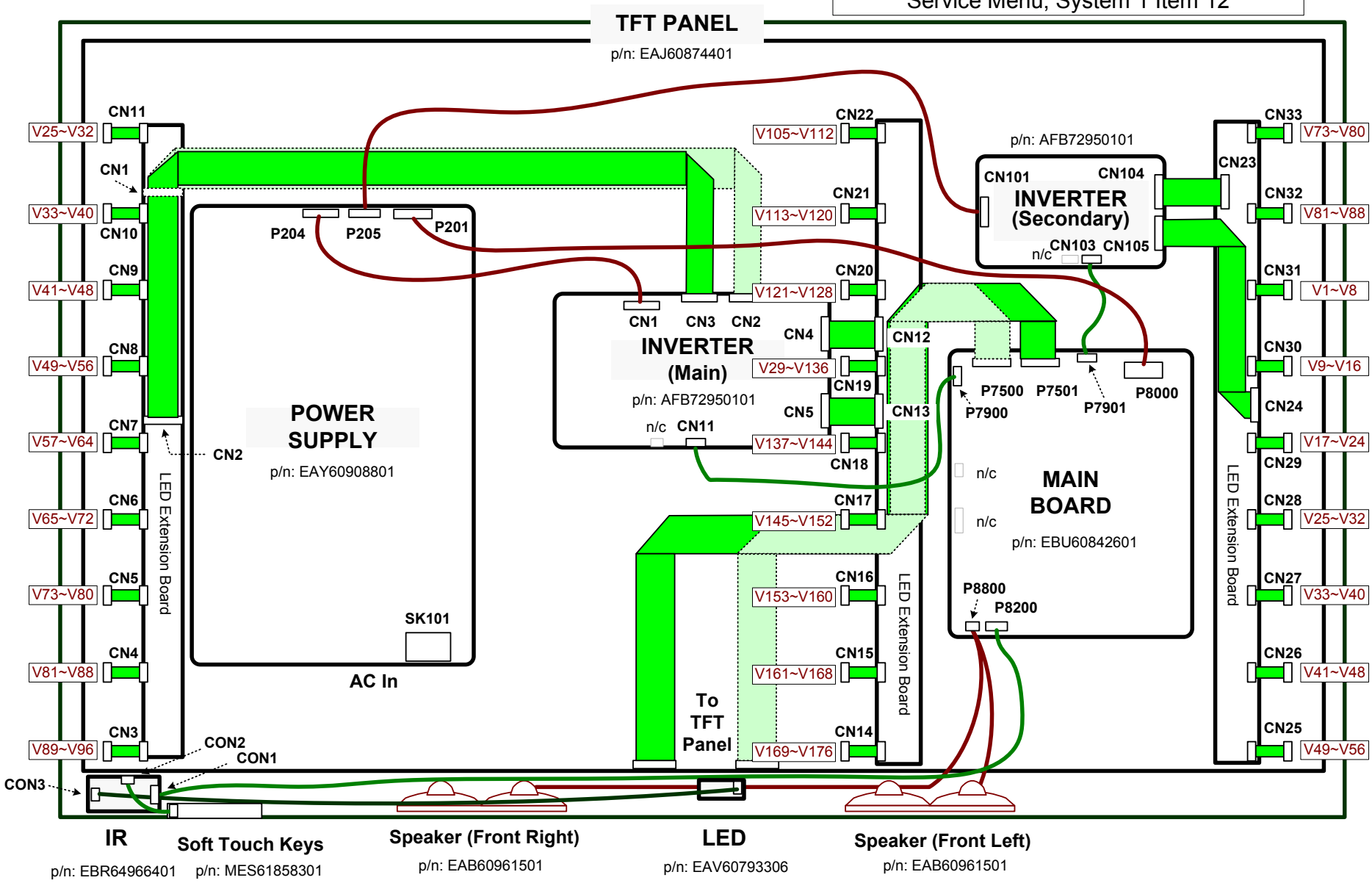

Power Supply Board Removal

Board is "Thin", be careful not to flex.

1

Disconnect P201, P205, P204 and AC In SK101.

2

Remove the 6 screws indicated by the arrows.

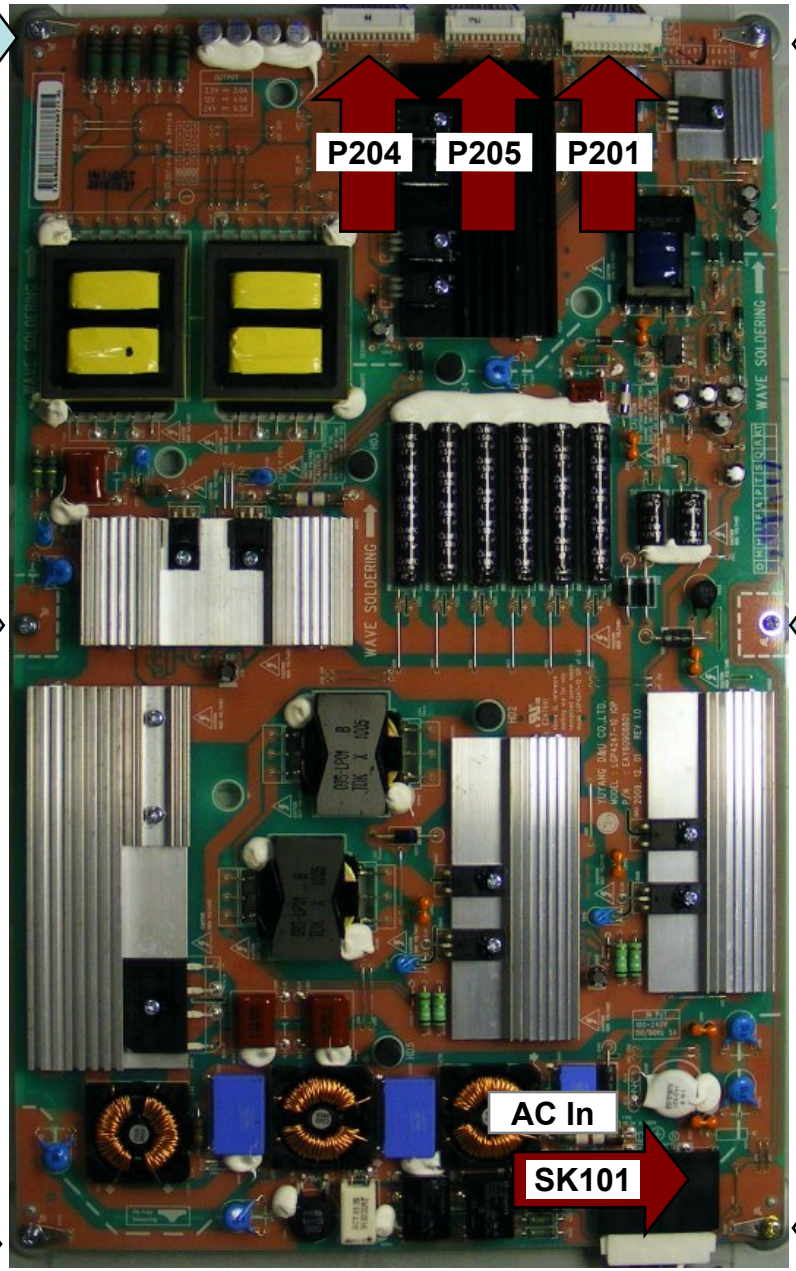

p/n EAY60908801

P201

Press in gently on the two tabs to release lock

SK101 fits very snug into it's connector.

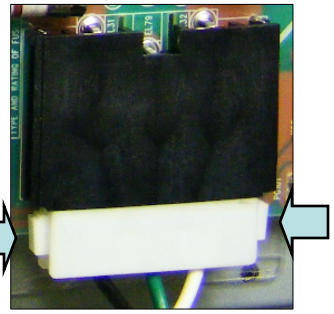

Press in on the two tabs to release lock

Removing the Main Board

p/n EBU60842601

1

Disconnect P7500, P7501, P7900, P7901, P8000, P8200 and P8800

2

Remove any tape holding down any cables. Remove the 7 screws indicated by the arrows.

3

Remove decorative plastic and remove the board.

NOTE: Always check on top and behind the Large ICs. And look for a piece of Chocolate (Heat Transfer Material). Be sure to transfer to new Board if present.

Flip the locking tab upward, pull the LVDS ribbon out.

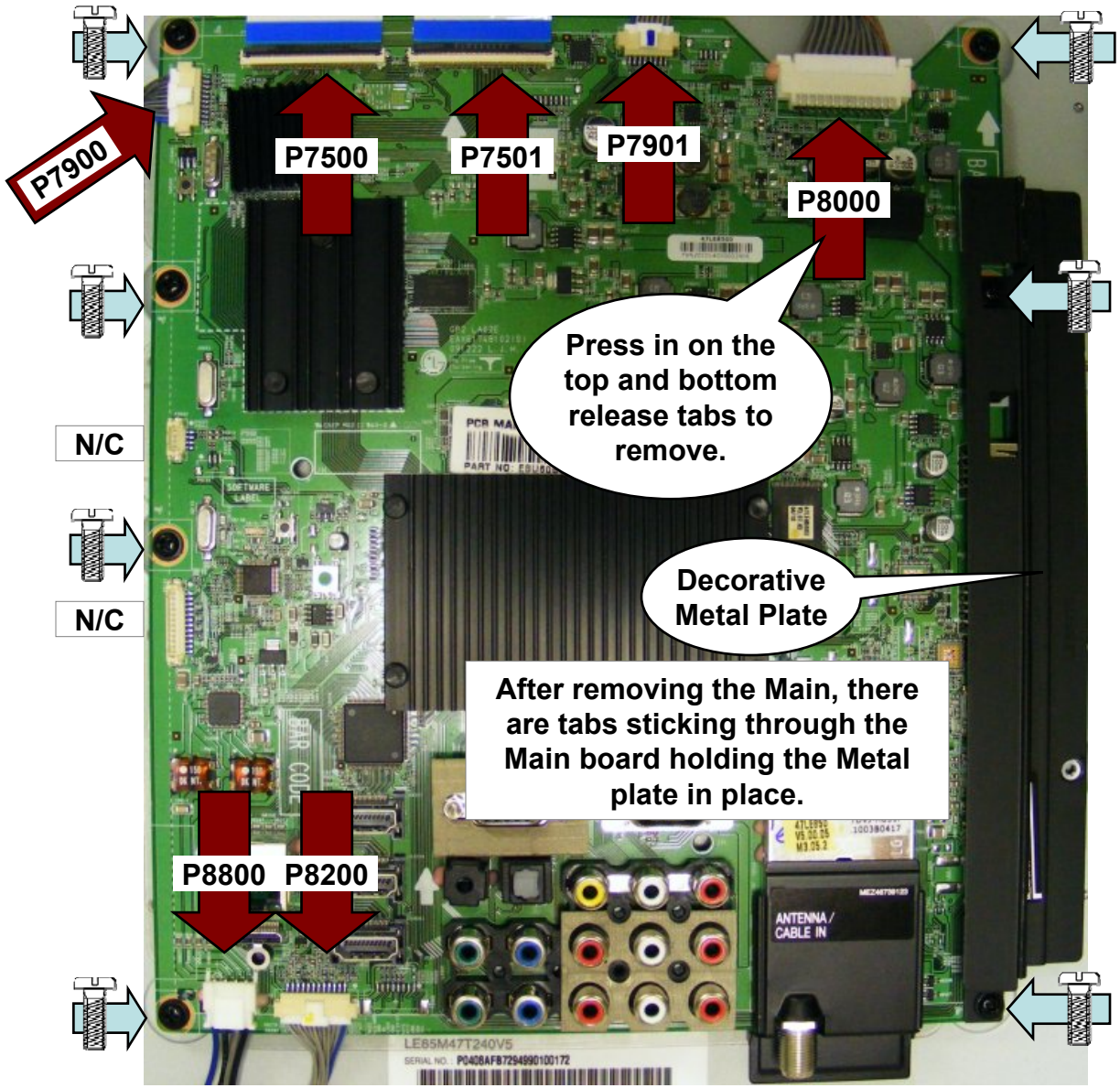

Removing the Inverter (Main) Board

p/n AFB72950101 (Comes with Inverter Secondary)

Board will run without Inverter (Secondary)

1

Disconnect CN1, CN2, CN3 and CN11.

2

Remove the 4 screws indicated by the arrows. Remove the Inverter.

Use caution, do not allow screws to fall.

NOTE: If Servicing the Board, leave the screws installed to provide stability and grounding.

Flip the locking tab upward, pull the ribbons out.

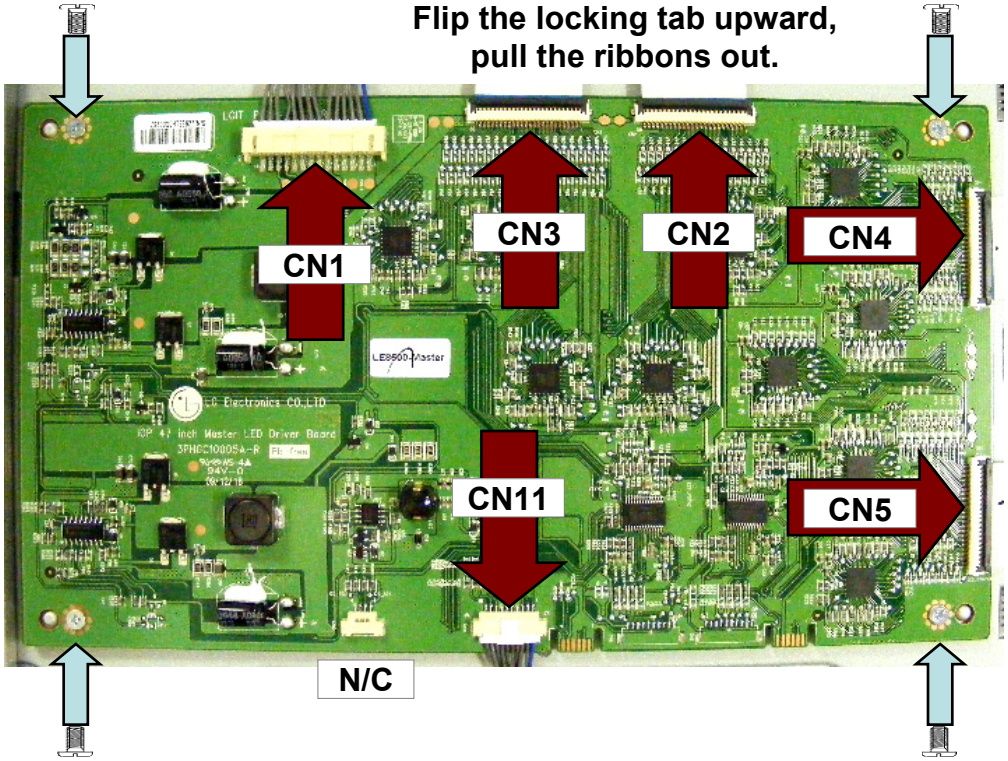

On CN2, CN3, CN4 and CN5 Flip the locking tab upward, pull the ribbons out.

Removing the Inverter (Secondary) Board

p/n AFB72950101 (Comes with Inverter Main)

1

Disconnect CN101, CN103, CN104 and CN105.

2

Remove the 4 screws indicated by the arrows. Remove the Inverter.

Use caution, do not allow screws to fall.

NOTE: If Servicing the Board, leave the screws installed to provide stability and grounding.

Board will run without Inverter (Main)

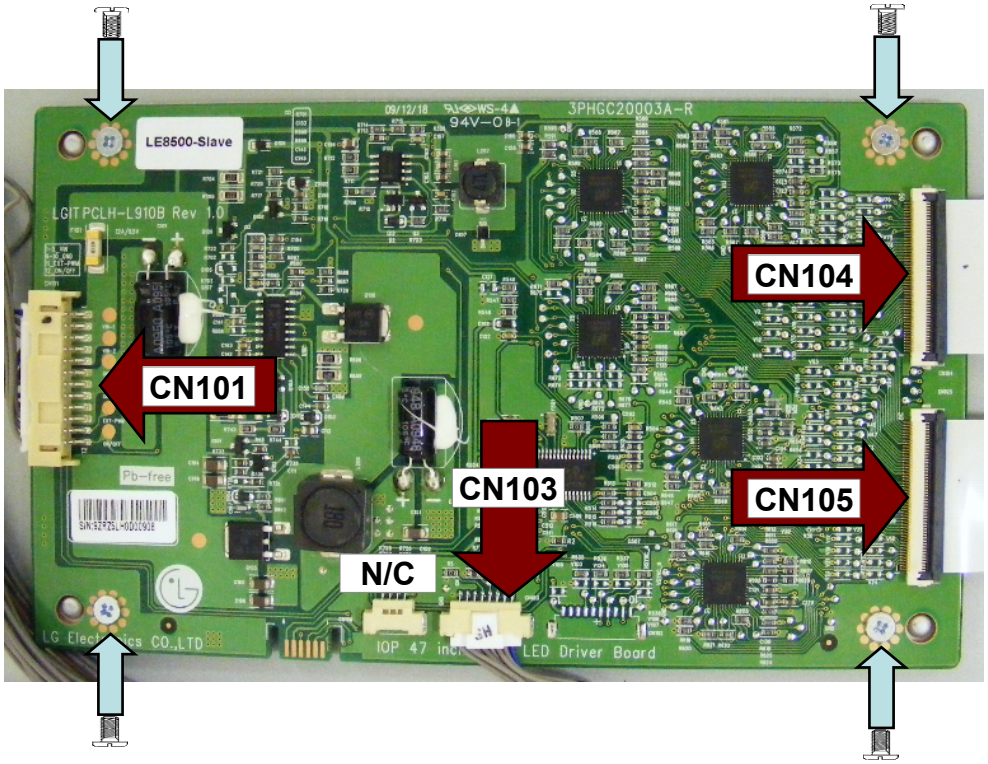

On CN104 and CN105 Flip the locking tab upward, pull the ribbons out.

Removing Front IR Board

p/n EBR64966401

1. Disconnect CON1, CON2 and CON3 connectors.
2. Press upward on the two tabs at the top. Tilt the board downward and lift straight up.

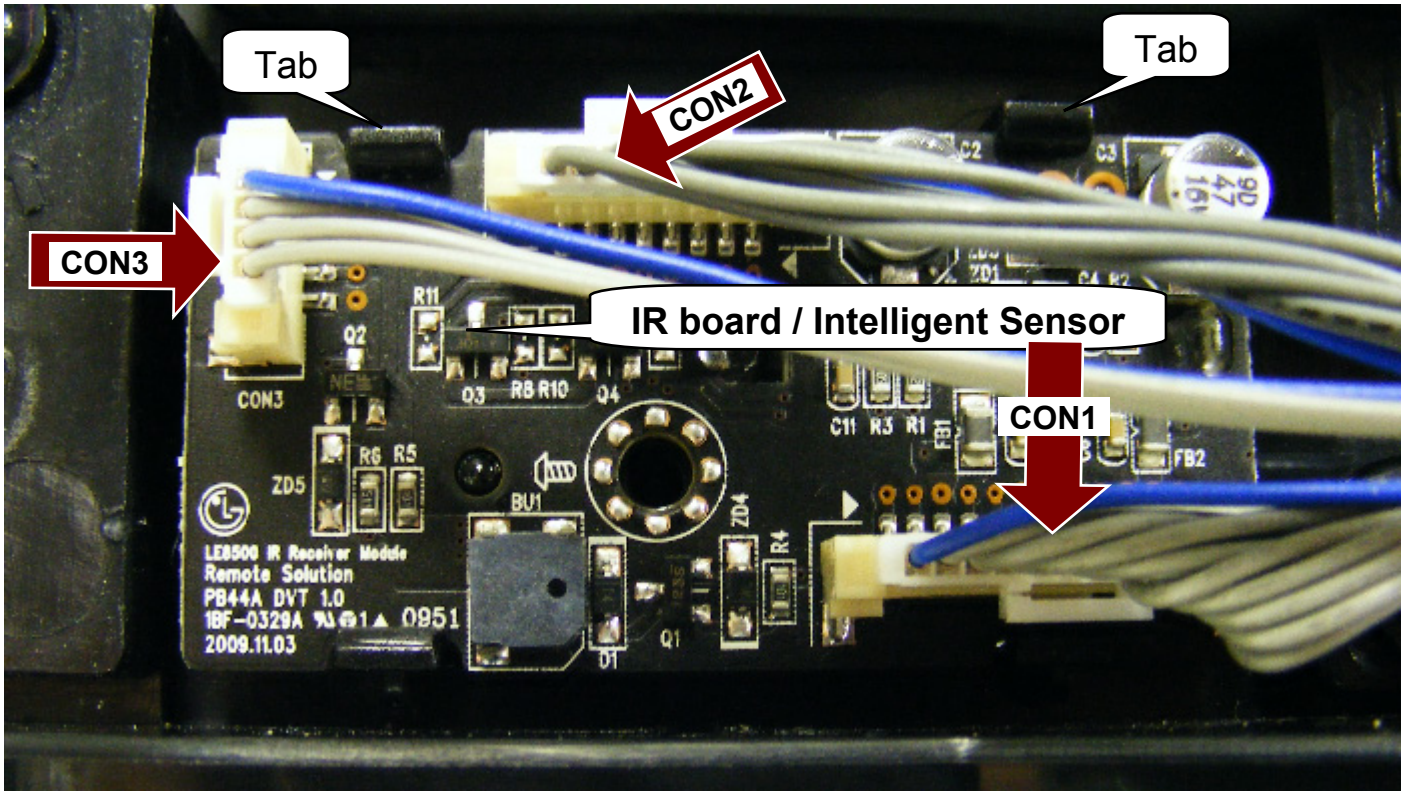

Troubleshooting:

This section of the manual will discuss troubleshooting.

Upon completion of this section the Technician will have a better understanding of how to diagnosis and resolve problems.

POWER SUPPLY SECTION

This switch mode power supply develops Stand By 3.5V at all times when AC is applied.
At power on, it develops 12V and 24V for the Main board And 24V for the Inverters.

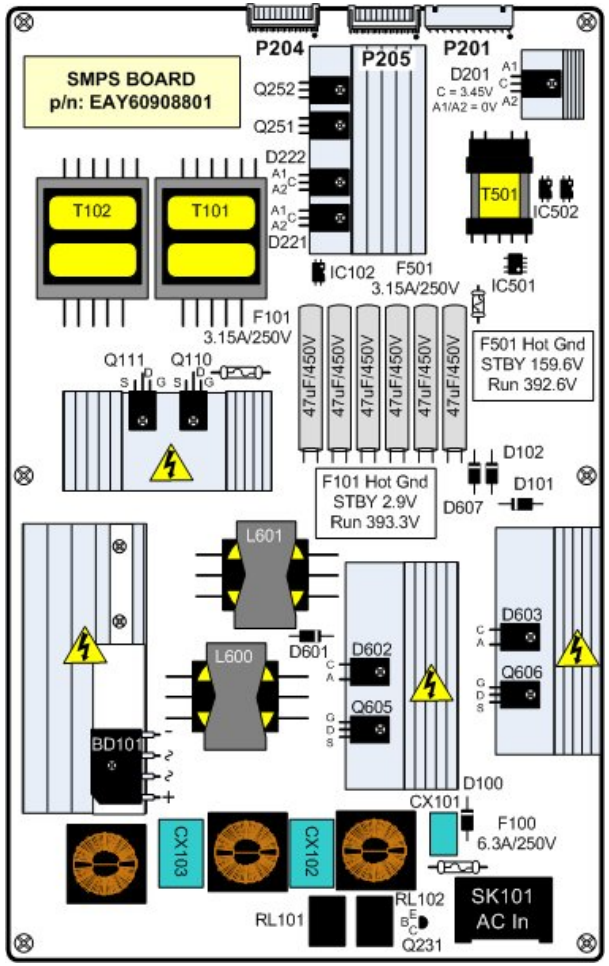

This power supply draws less than 1 watt during stand by mode. The fuse F501 reads 159.6V (from hot ground) during this time. (F101 is <3V)

When the controller chip receives the PWR-ON command 3.3V via P201 Pin 1, the primary section increases its current supplying ability. Both Primary fuses F101 and F501 now read a little more than 390V.

P201 Connector: (To Main Board)
12V is routed out P201 pins 17, 19 and 21 and 24V is routed out P201 pins 2, 3 and 4.

P204 Connector: (To Inverter Main Board)
24V is routed out P204 pins 1 through 5.

P205 Connector: (To Inverter Secondary Board)
24V is routed out P205 pins 1 through 5.

Power Supply (SMPS) Board Layout

p/n EAY60908801

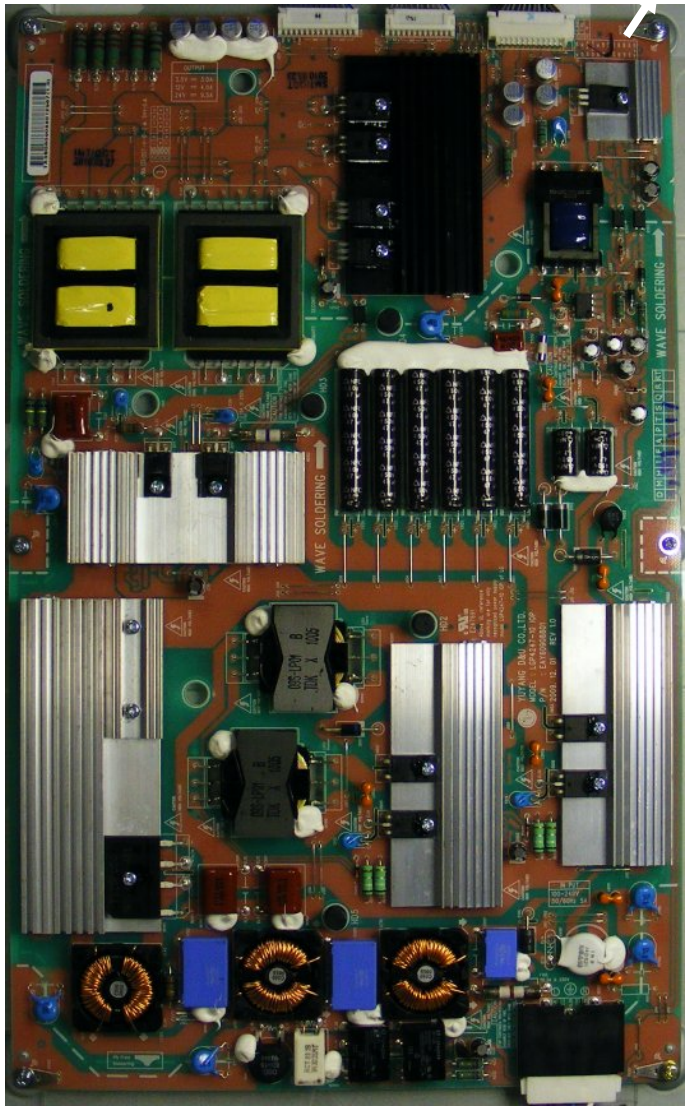

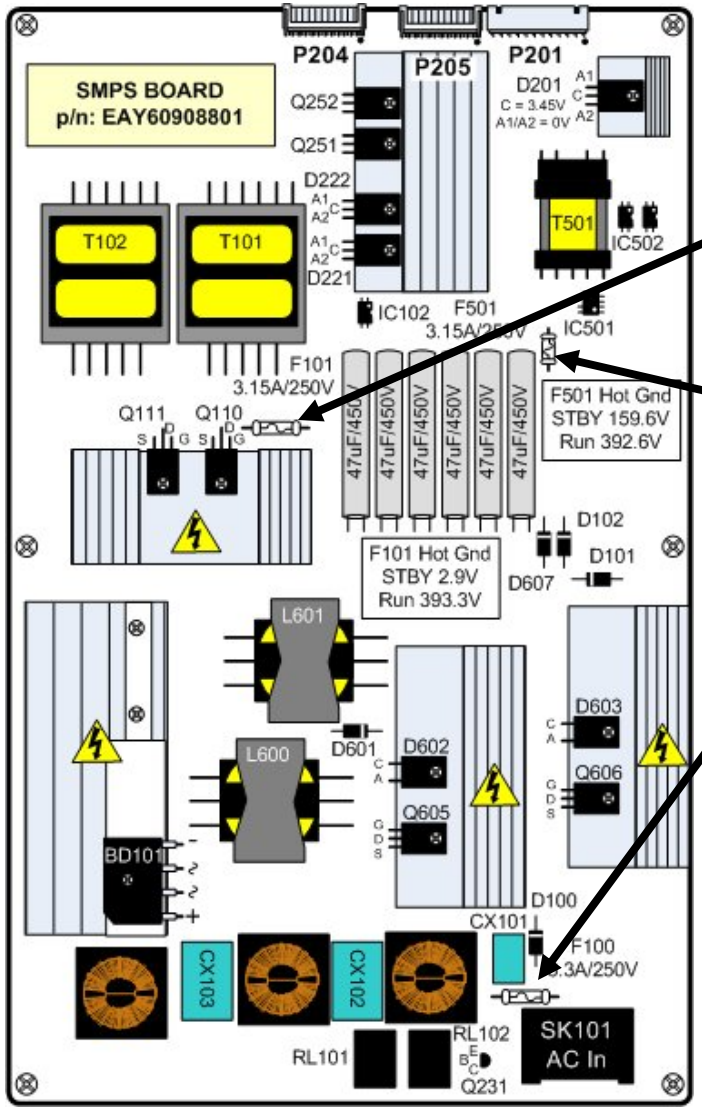

F101
3.15A/250V
STBY 2.9V
Run 393.3V
From Hot Gnd

F501
3.15A/250V
STBY 159.6V
Run 392.6V
From Hot Gnd

F100
6.3A/250V
AC Protect

Hot Ground Shock Hazard

47LE8500 Power Supply Start Up Sequence

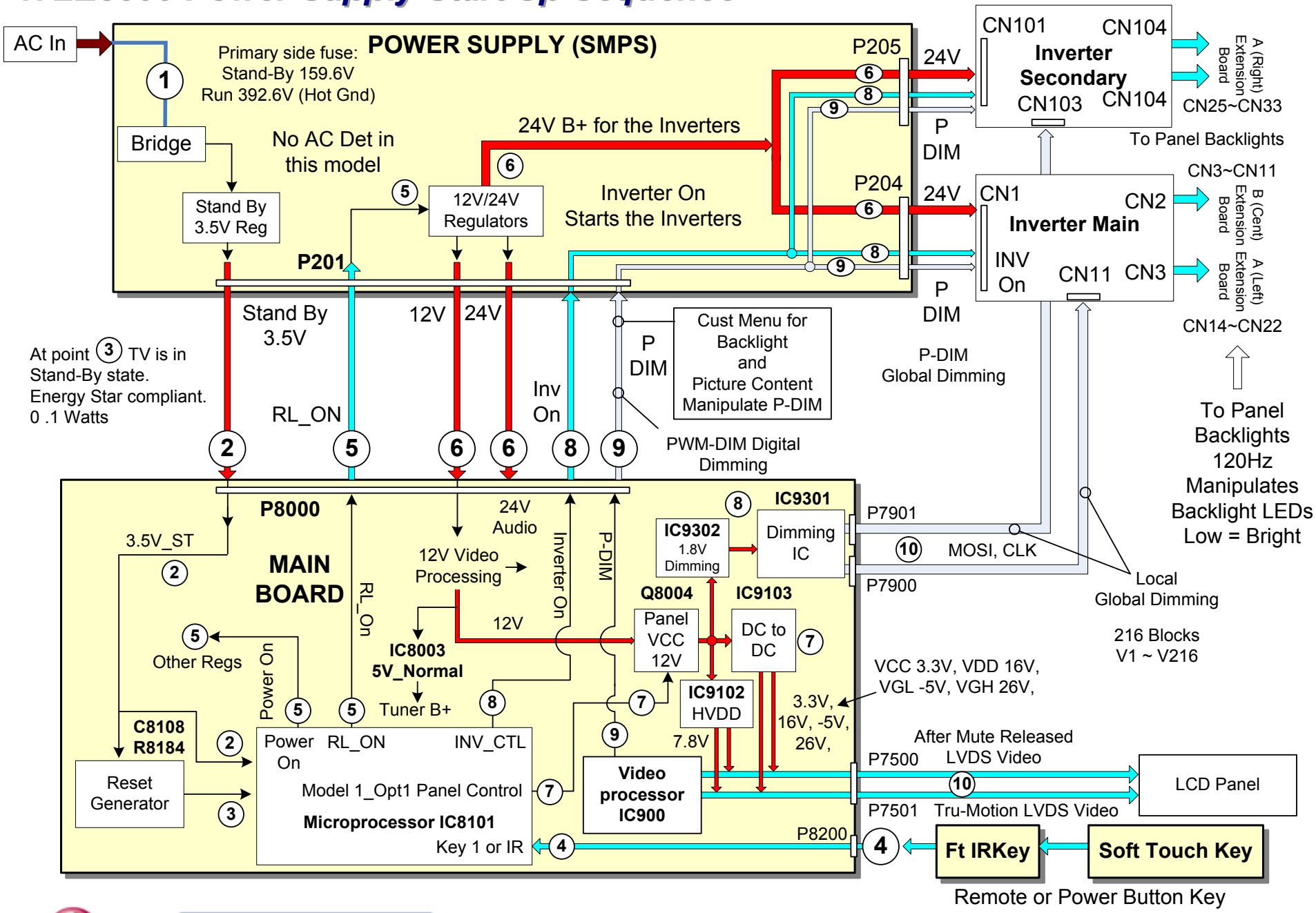

47LE8500 Television Turn On Commands Circuit Drawing

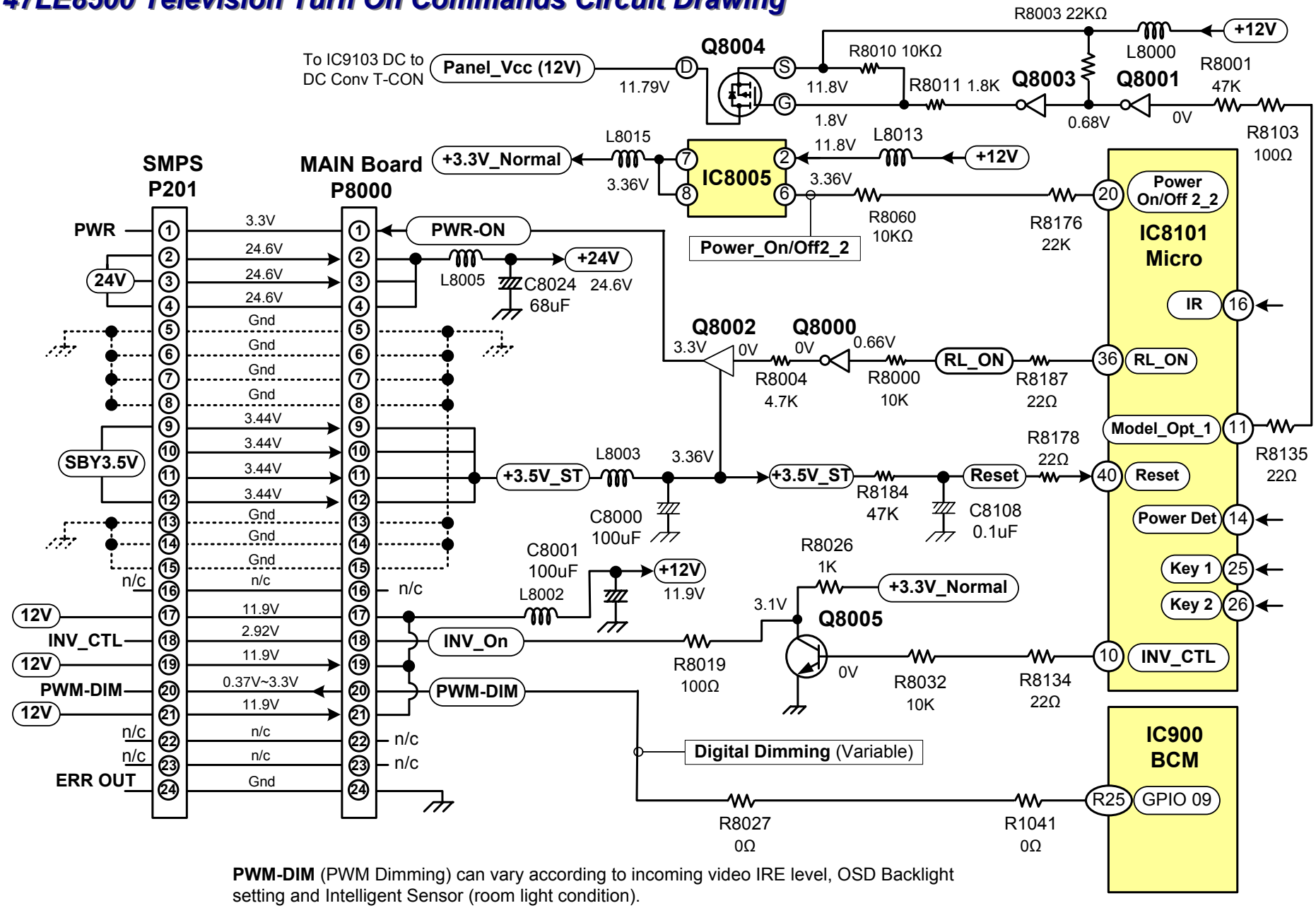

PWM-DIM (PWM Dimming) can vary according to incoming video IRE level, OSD Backlight setting and Intelligent Sensor (room light condition).
Range 0.37V to 3.3V.

Power Supply Board Low Voltage Test 1

AC Should not be applied at any time while adding jumpers or While unplugging connectors as damage to the circuit Board may occur.

a) When AC is applied, the SMPS "MUST" be producing STBY 3.5V on pins 9, 10, 11 or 12 of P201.

If 3.5V Standby is not being generated, the SMPS is defective and must be replaced. There is no need to continue with the next test.
But, make sure AC is arriving at the connector SK101.

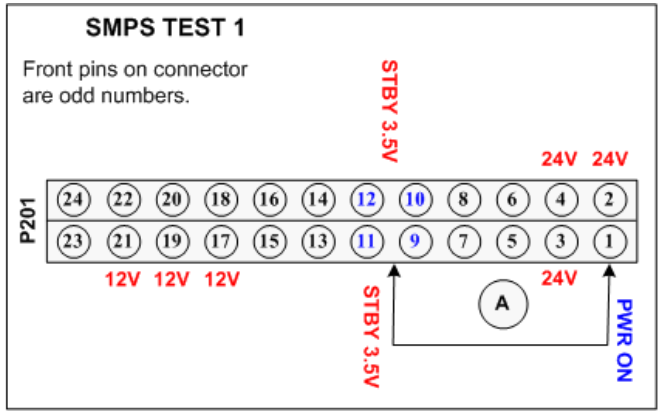

Pin 1 is the Brown Wire

(b) Unplug P8000 on the Main Board to make insertion of the Jumpers easier.
Use P700 Side to insert resistors

TEST 1:

No Backlights during this test

(1) Add a jumper between (3.5V STBY) pin 7, 8, 9 or 10 and Pin 1 (PWR_ON). Apply AC.
This will turn on the power supply, relays will click.
a) Check that the 24V and 12V power supplies are turned on,
- P201 (12V pins 17, 19 and 21)
- P201 (24V pins 2, 3 and 4)
- P204 and P205 (24V pins 1 through 5) to the Inverters

(2) Remove AC power

Power Supply Board Backlights Test 2

Continue if the 1st test was OK.
Leave original jumper in place.

(3) Add another jumper between (STBY_3.5V) pin 9, 10, 11 or 12 and Pin 18 (INV_On).

(4) Apply AC Power. Simulating a Power and Backlight On command.

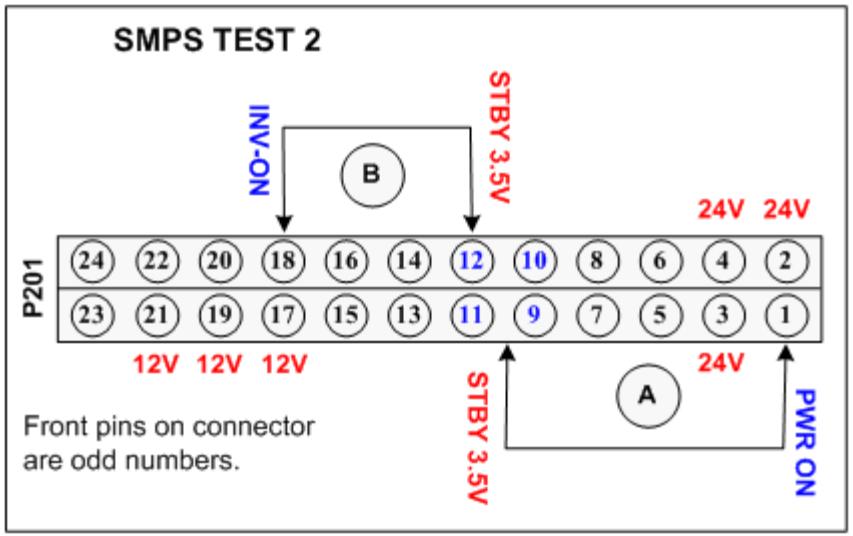

Pin 1 is the Brown Wire

Backlights Normal:
a) If normal, the backlights should turn on. SMPS OK, Inverter OK.

Backlights Abnormal:
a) Recheck all connections.
b) Confirm the INV On/Off line pulling up to at least 3V and arriving at both Inverters.
c) Check the connections to the Inverters.

If the 24V and the Inverter On command is arriving at the Inverters in, then see Inverter Section for further testing.
Note: Either Inverter can run separately.

REMOVE AC POWER:

Power Supply Connector P201 Voltage and Diode Check

P201 Connector "SMPS" to "Main" P8000

Pin	Label	STBY	Run	Diode Check
1	**PWR-ON**	0V	3.3V	1.68V
2-4	**24V**	0V	24.6V	0.424V
5-8	**GND**	GND	GND	GND
9-12	**3.5V**	3.45V	3.44V	Open
13-15	**Gnd**	Gnd	Gnd	Gnd
16	**n/c**	n/c	n/c	Open
17	**12V**	0V	11.9V	1.39V
18	**INV-ON**	0V	2.92V	Open
19	**12V**	0.42V	11.9V	1.39V
20	**(1) P-DIM**	0V	0.37V~3.3V	Open
21	**12V**	0V	11.9V	1.39V
22	**n/c**	n/c	0V	Open
23	**n/c**	n/c	0V	Open
24	**ERROR**	0V	0V	Open

P201 Connector

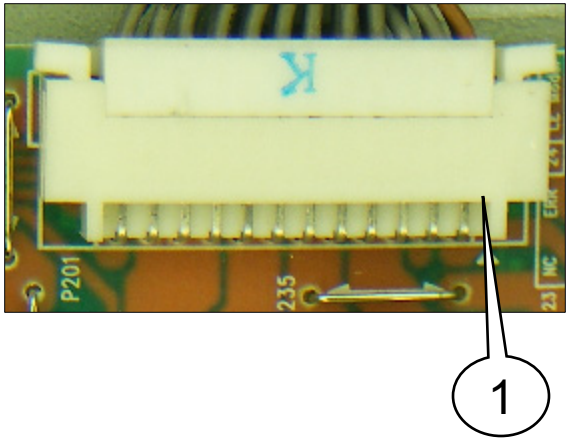

Odd pins are on front row

(1) PDIM Pin 20 can vary according to incoming video IRE level, OSD Backlight setting and then Intelligent Sensor (room light condition) Output from the Video Processor IC900. Range 0.37V to 3.3V.

.

Diode Mode values taken with all Connectors Removed

Power Supply Connector P204 / P205 Voltage and Diode Check

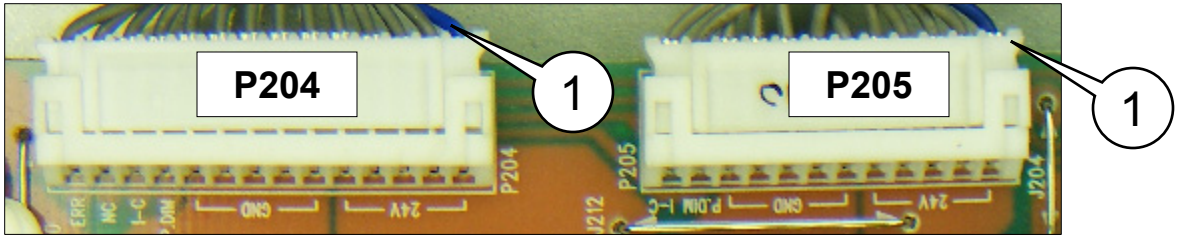

P204 "SMPS" to CN14 "Inverter Main"

Pin	Label	STBY	Run	Diode Check
1-5	**24V**	0V	24.6V	0.424V
6-10	**GND**	GND	GND	GND
11	(1) **P-DIM**	0V	0.37V~3.3V	Open
12	(2) **I-C**	0V	2.92V	Open
13	**n/c**	n/c	n/c	Open
14	**ERROR**	0V	0V	Open

P205 "SMPS" to CN201 "Inverter Secondary"

Pin	Label	STBY	Run	Diode Check
1-5	**24V**	0V	24.6V	0.424V
6-10	**GND**	GND	GND	GND
11	(1) **P-DIM**	0V	0.37V~3.3V	Open
12	(2) **I-C**	0V	2.92V	Open

(1) PDIM Pin 20 can vary according to incoming video IRE level, OSD Backlight setting and then Intelligent Sensor (room light condition) Output from the Video Processor IC900. Range 0.37V to 3.3V.

(2) **I-C** is the Inverter On Control Signal

Diode Mode values taken with all Connectors Removed

Power Supply Connector SK101 Voltage and Diode Check

Diode Mode values taken with all Connectors Removed

SK101 "SMPS" to AC IN

Pin	Label	STBY	Run	Diode Check
EL131	L	120Vac		OL
EL132	N			OL

AC Voltage Readings (From Hot Ground)
Pins 1 and 2 for STBY and RUN.

F100

Bottom Right of SMPS

F100
6.3A/250V
AC IN

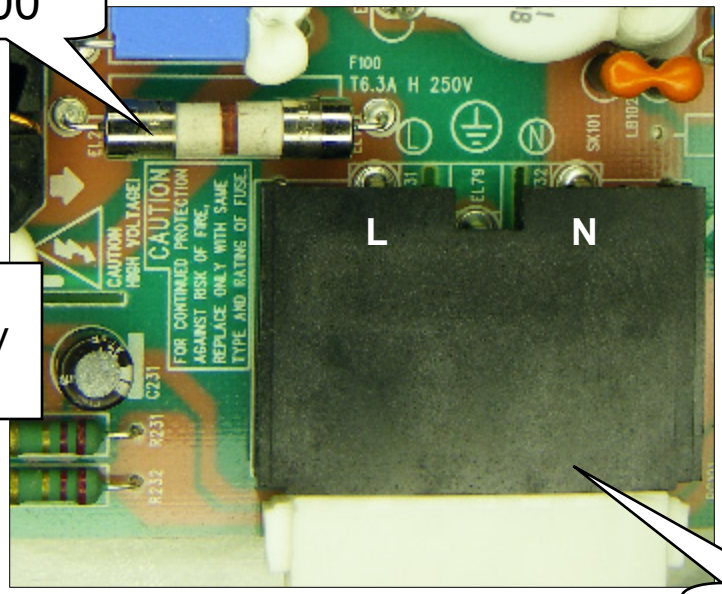

F100 (Diode Check)
Main Power Switch Closed

Red or Black Lead on Fuse (Open)
Other Lead on Hot Ground

SK101

Power Supply F101 and F501 Voltage Checks

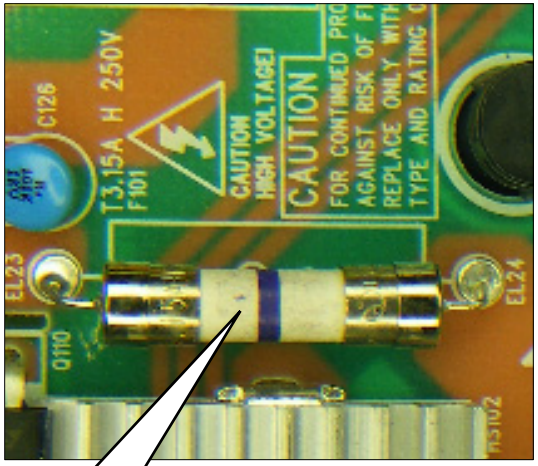

F101

F101
3.15A/250V

From Hot Gnd
STBY 2.9V
Run 393.3V

If reading the voltage on F101 right after power off, it takes a very long time to bleed down to the reading given here.

F501

F501
3.15A/250V

From Hot Gnd
STBY 159.6V
Run 392.6V

INVERTER (LED BACKLIGHTS) SECTION

The Inverter (Main) receives 24V from the SMPS on CN1 pins 1~5 and Inverter (Secondary) receives 24V on CN101 pins 1~5. The Inverter On (INV ON) command arriving on CN1 or CN101 pin 12 starts the Inverter drive signals, (120Hz).
P-DIM is delivered from the Main board through the SMPS to the Inverter on CN1 or CN101 pin 11.
The Inverters are responsible for delivering B+ approx. 13V to each of the 216 LED Blocks. This is accomplished by 3 DC to DC Converters, 2 on Inverter (Main) and 1 on Inverter (Secondary)

Inverter (Main) 13V
- **U101, Q4, Q5, L101 and C75, out CN2 and CN3.**
- **U102, Q7, Q8, L102 and C89, out CN4 and CN5.**

Inverter (Secondary) 13V
- **U101, Q105, Q106, L206 and C151, out CN104 and CN105.**

The Inverters must also deliver grounding pulses (Drive Signals) to each of the 216 LED Blocks. This is accomplished by the 14 switching components, 10 on Inverter (Main) U9~U11 and U13 and 5 on Inverter (Secondary) U2~U5 and U13.

Inverter (Main) has 4 Connectors CN2~CN5 that connect to Extensions boards. The Left hand Extension board (as viewed from the rear) connects to CN2 and CN3 and the Center Extension board connects to CN4 and CN5.

Inverter (Secondary) has 2 Connectors CN104~CN105 that connect to the right hand Extension board (as viewed from the rear) which connects to CN23 and CN24.
Each Extension board has 9 connections to the Backlight LEDs.
There are 4 LEDs per/block, 216 Blocks, 8 Blocks per/cartridge, 3 Cartridges per/bar, 9 bars (rows), 32 LEDs per/cartridge, 96 LEDs per/bar. With a total of 864 LEDs.

IOP Structure Integrated Optic Plate

The Image below shows the actual Backlight Bars used in the 47LE8500.
The Cartridges are assembled from the bottom to the top, like shingles on a roof.

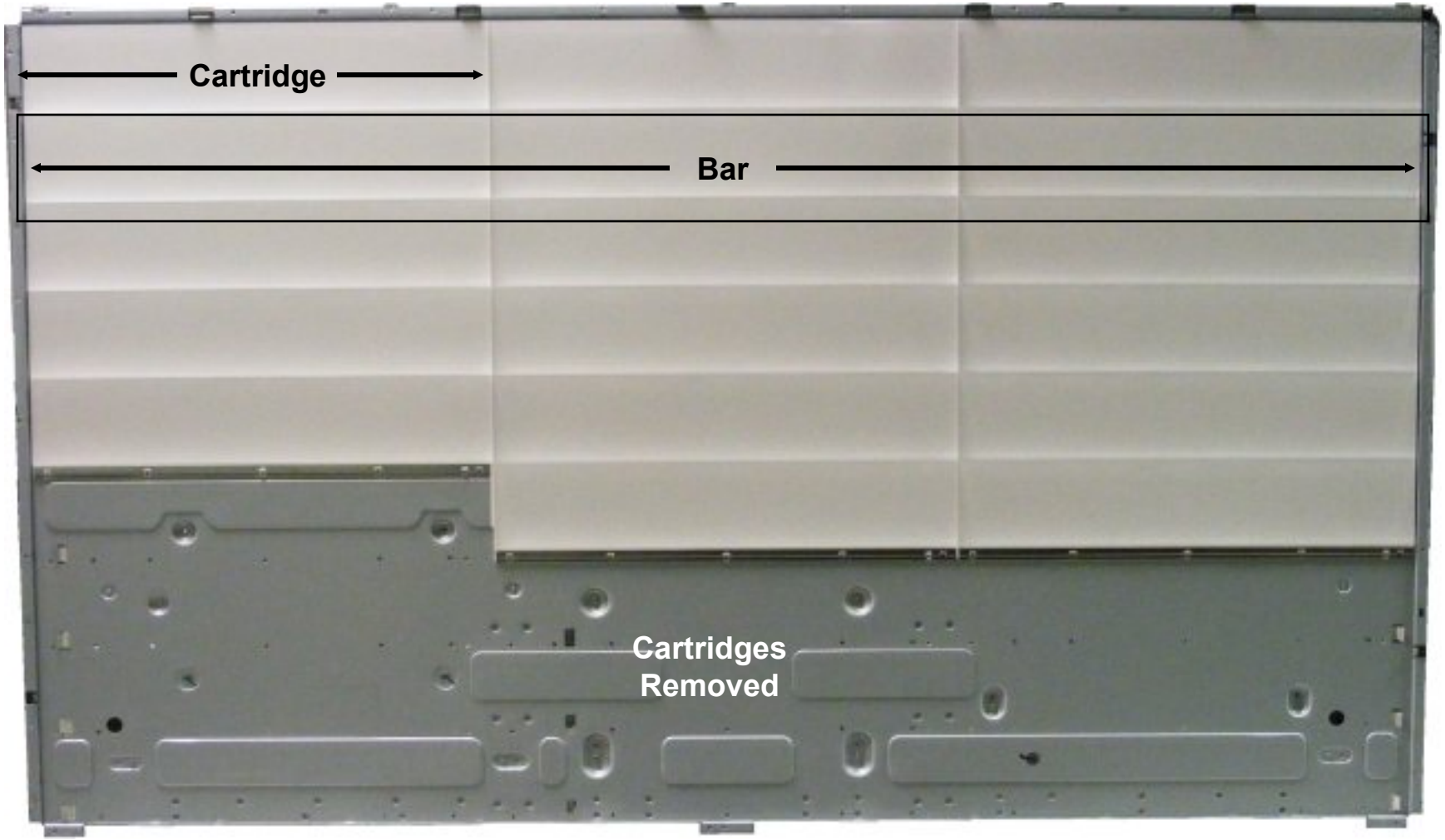

IOP Structure Information

4 LEDs per/block (216 Blocks) 8 Blocks per/cartridge, 9 bars with 3 cartridges per/bar, 32 LEDs per/cartridge, 96 LEDs per/bar. 864 LEDs total.

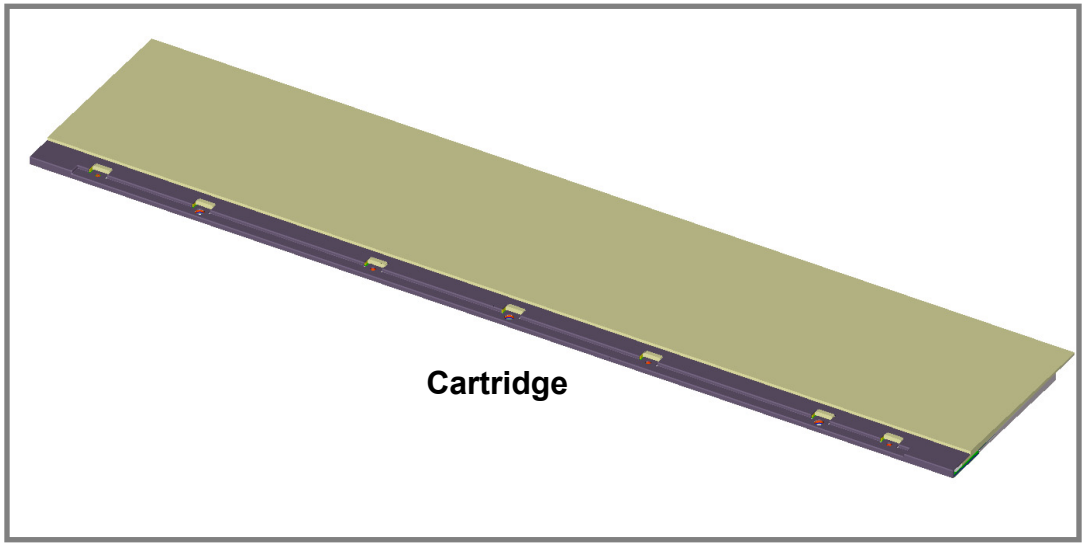

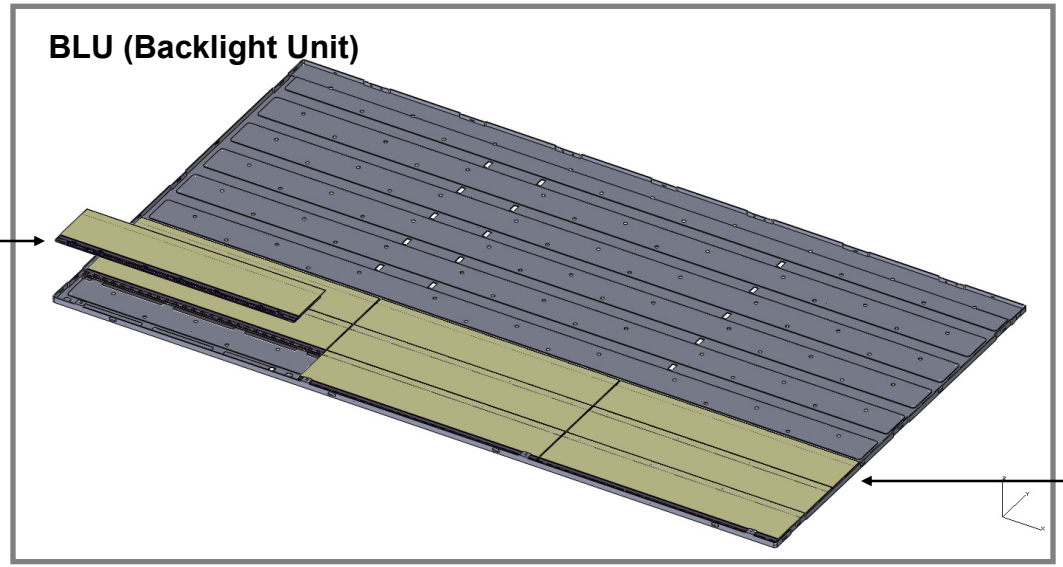

47LE8500 (IOP) Cartridge Breakdown

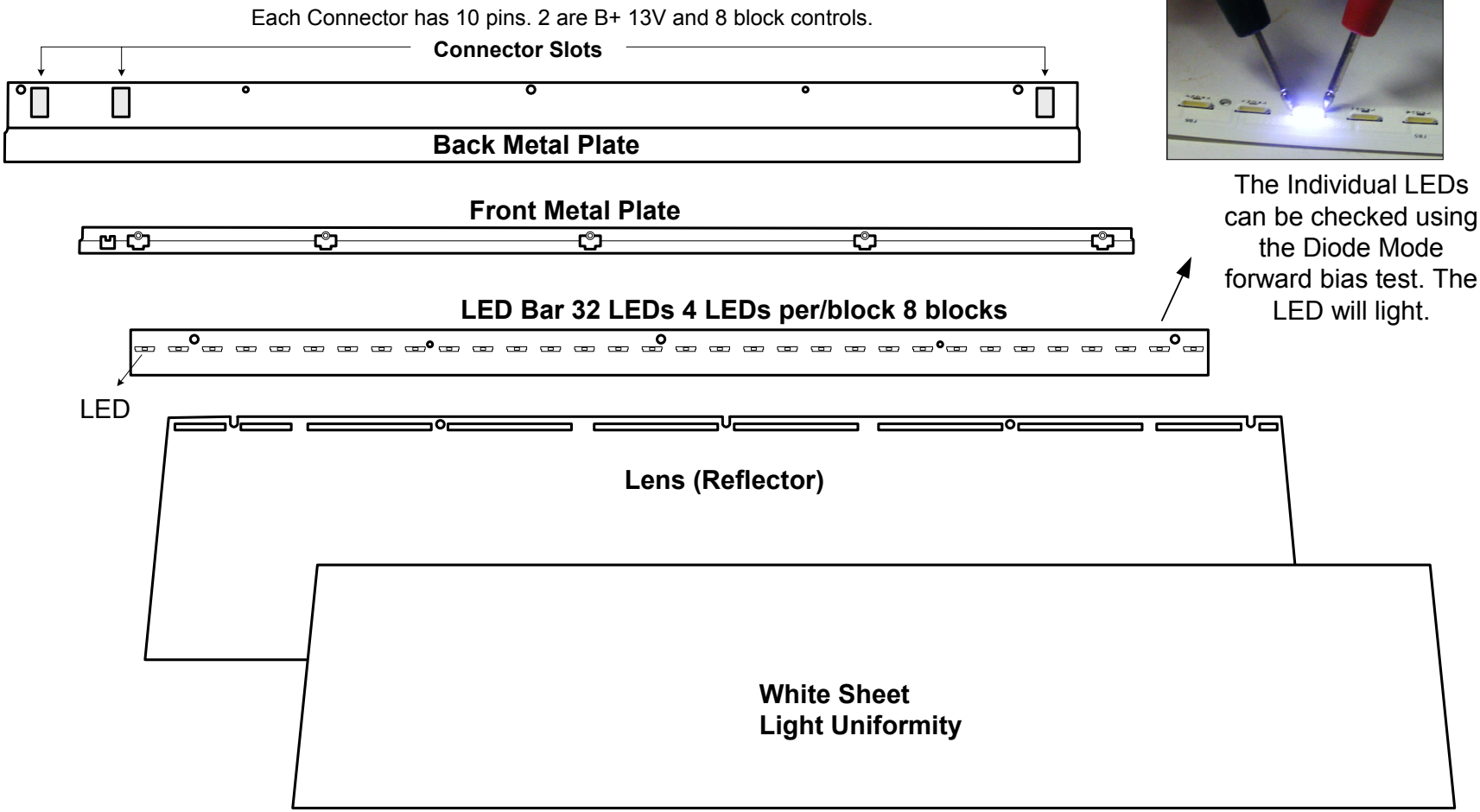

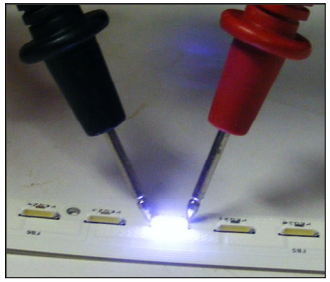

The Individual LEDs can be checked using the Diode Mode forward bias test. The LED will light.

47LE8500 IOP Block Structure Information

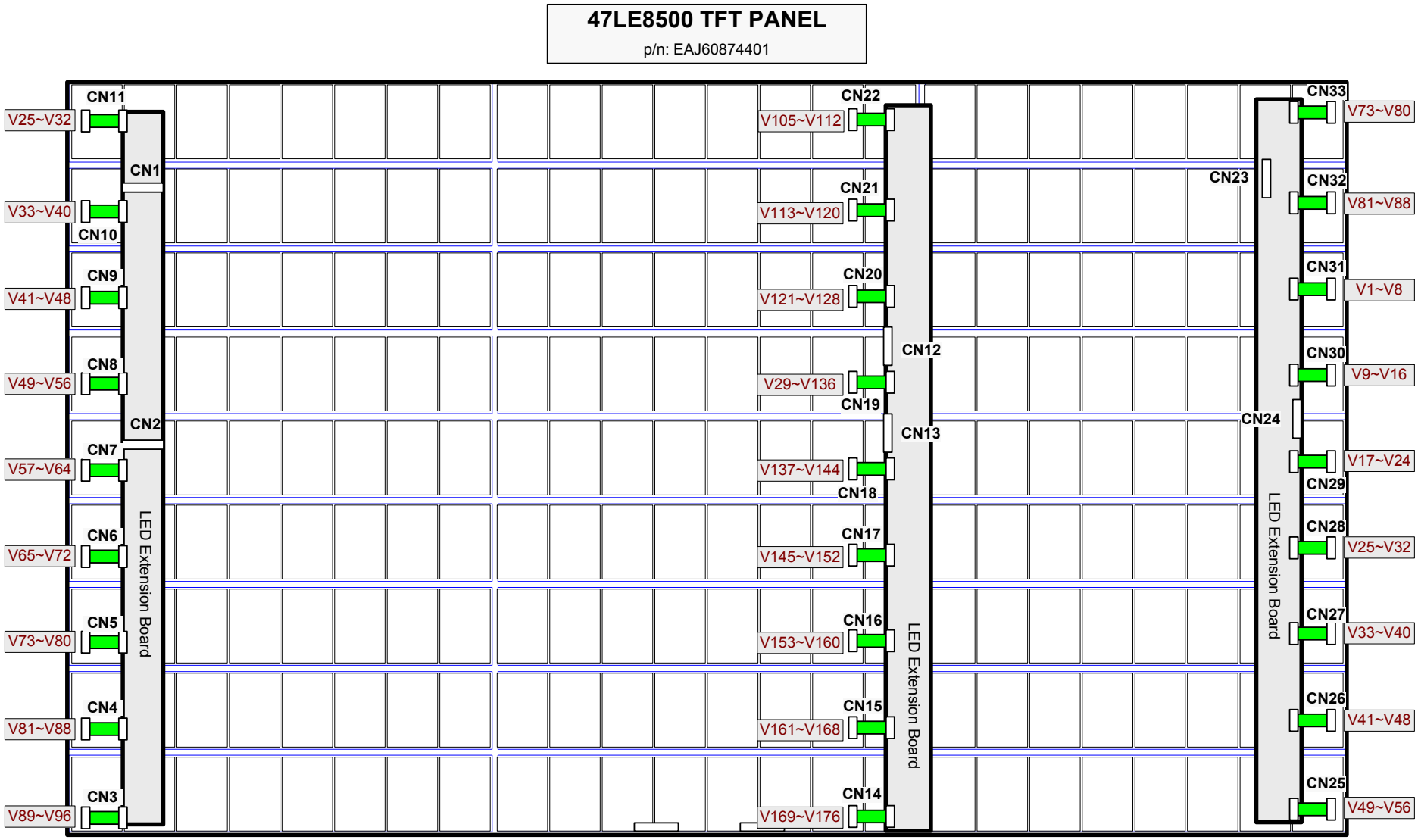

Backlight Blocks
9 Bars (24 Blocks Ea.)
216 Blocks
V1 through V216

LVDS To TFT Panel

3 Extension Boards
9 Connectors Ea.
2 (13V) B+ pins Ea.
8 (V) Connections Ea.
216 (V) Connections

47" Explode View of the IOP Panel

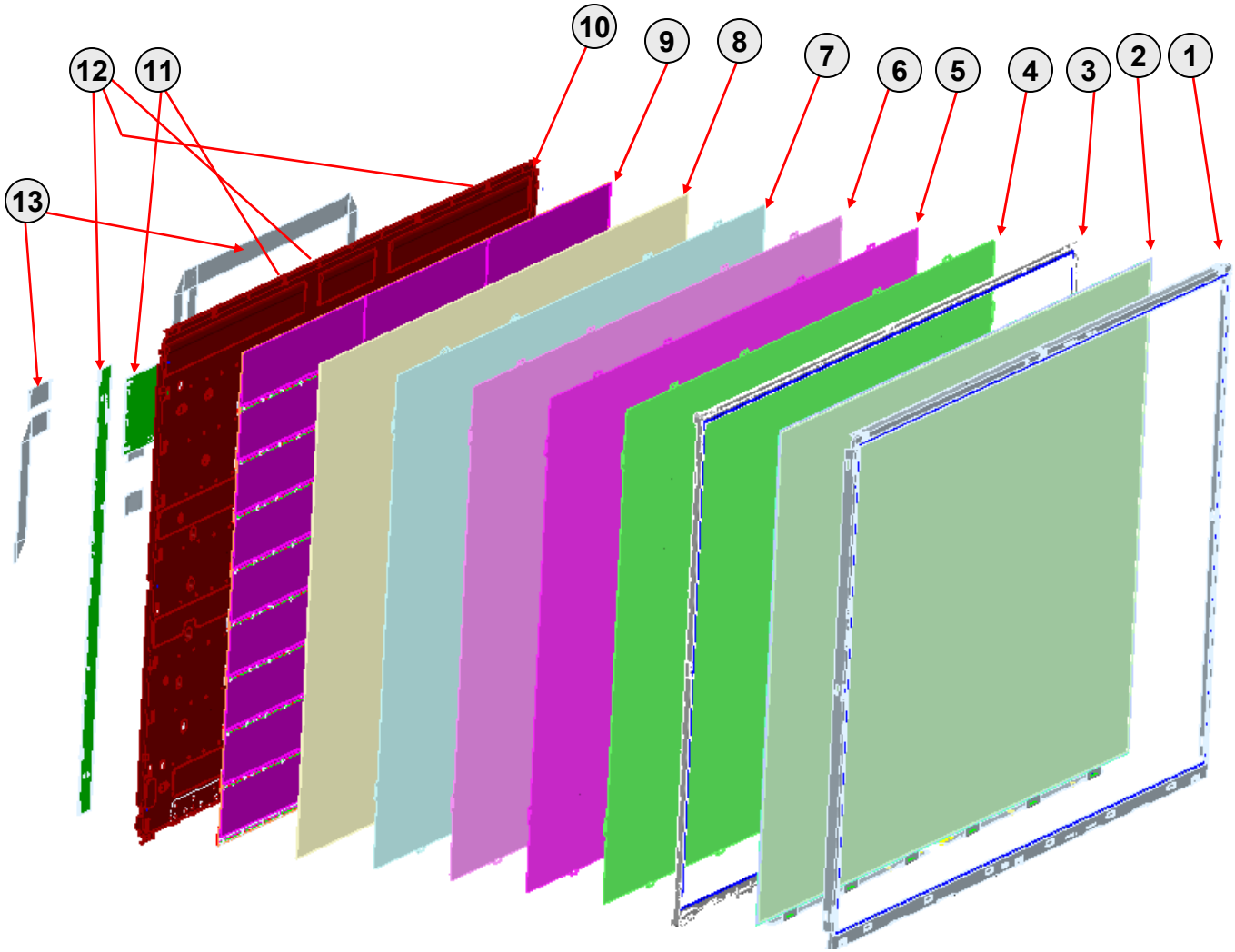

1. Case-Top Ass'y
2. TFT Panel Ass'y
3. Guide Panel
4. Sheet DBEFD
5. Sheet Prism U
6. Sheet Prism L
7. Sheet Diffuser L
8. Plate Diffuser
9. Cartridge Ass'y
10. Cover Bottom
11. Driver Boards (2)
12. Extension Boards (3)
13. FRC

Flexible Ribbon Cables

47LE8500 Inverter Main Layout

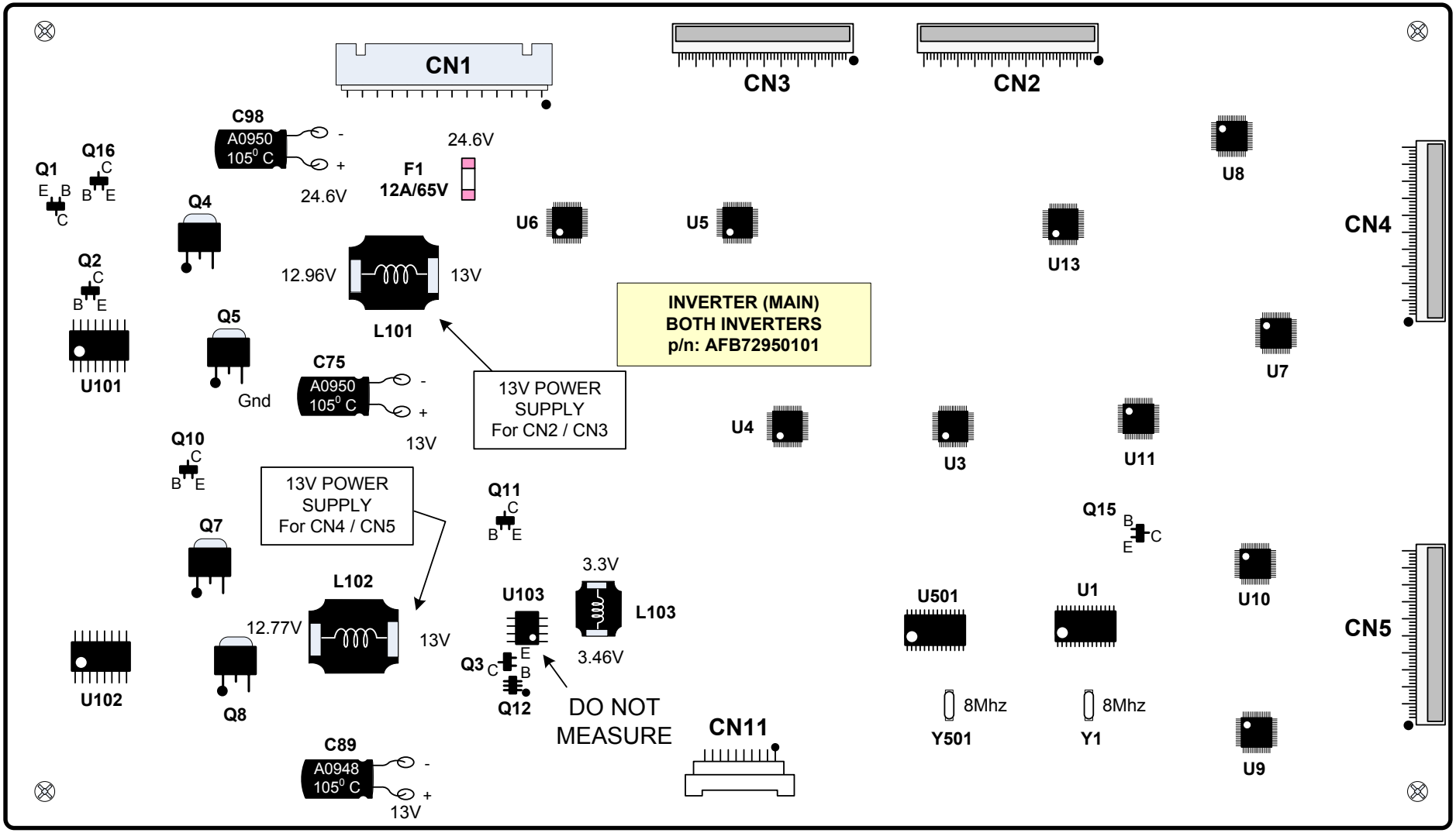

47LE8500 Inverter Secondary Layout

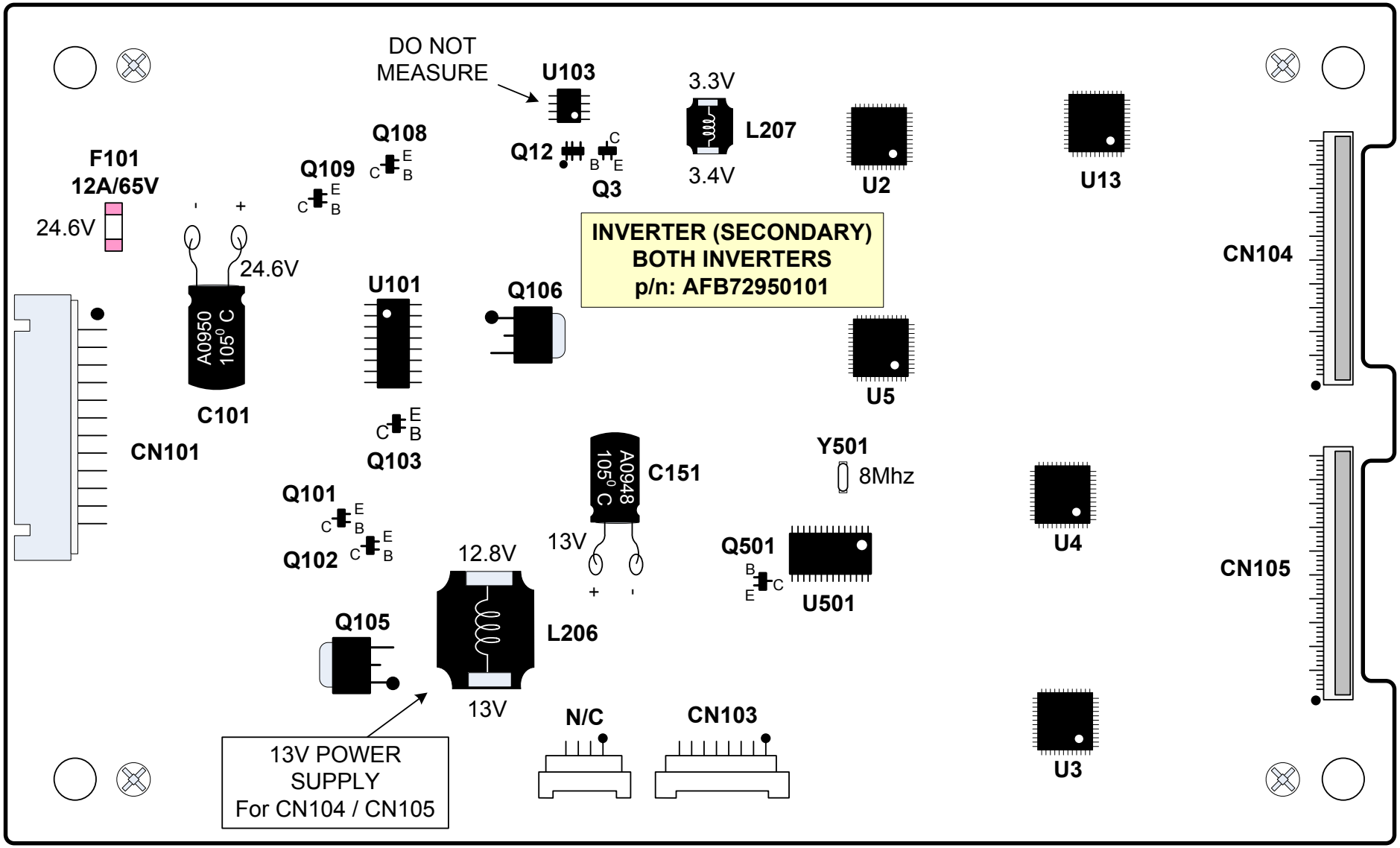

47LE8500 Inverter (Main) B+ Routing

To CN 1 Extension Left
CN3 B+ for LED Blocks.
Pins 1~2, 11~12, 21~22,
31~32, 41~42.

To CN 2 Extension Left
CN2 B+ for LED Blocks.
Pins 9~10, 11~12,
21~22, 31~32

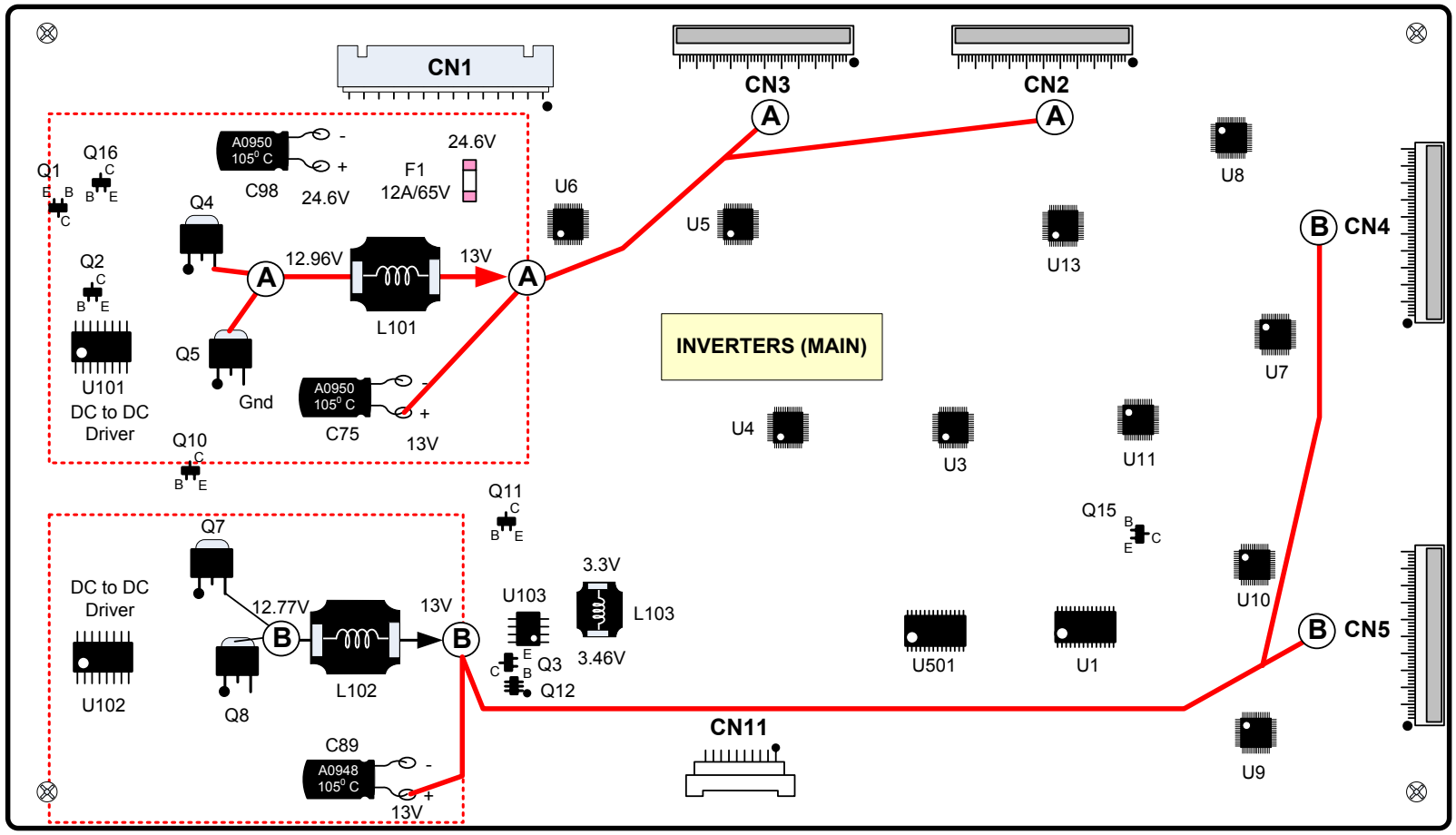

To CN 12
Extension Cent
CN4 B+ for
LED Blocks.
Pins 11~12, 21~22,
31~32, 41~42

To CN 13
Extension Cent
CN5 B+ for
LED Blocks.
Pins 9~10,
19~20, 29~30,
39~40, 49~50.

	Q4		Q5		Q7		Q8
1	18.3V	1	5V	1	18.1V	1	5V
2	24.6V	2	12.9V	2	24.6V	2	12.8V
3	12.9V	3	Gnd	3	12.8V	3	Gnd

(A) 12.92V For Main Extensions Board A (Left Side). To Connectors CN2 and CN3.

(B) 12.92V For Main Extensions Board B (Center). To Connectors CN4 and CN5.

47LE8500 Inverter (Secondary) B+ Routing

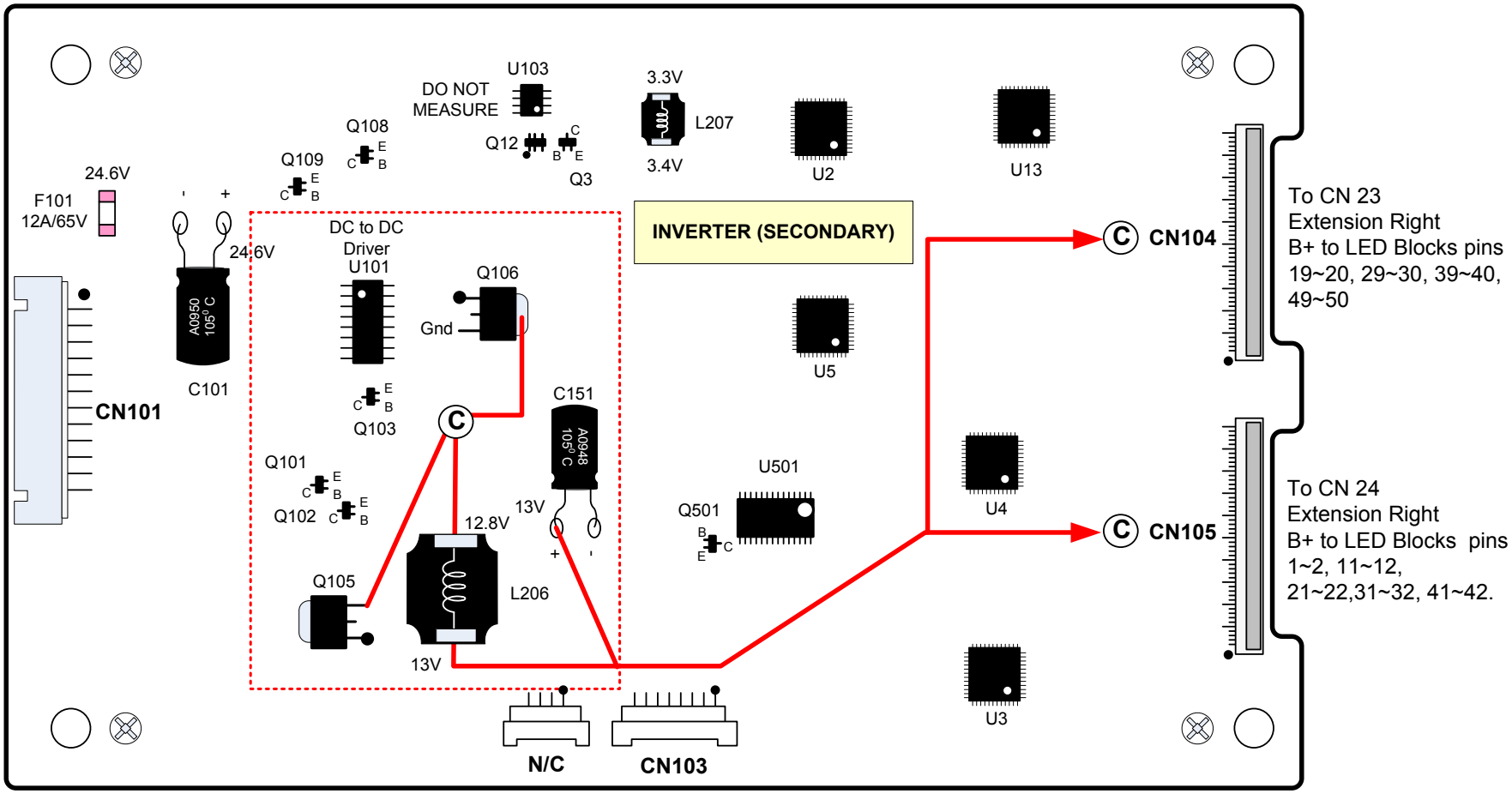

Q105		Q106	
1	18.15V	1	5V
2	24.6V	2	12.8V
3	12.8V	3	Gnd

(C) 13V For Secondary Extensions Board (Right Side) Connectors. To Connectors CN23 and CN24.

Inverter 13V LED B+ DC to DC Converter Troubleshooting

Q5, Q8 or Q106 Pin 1

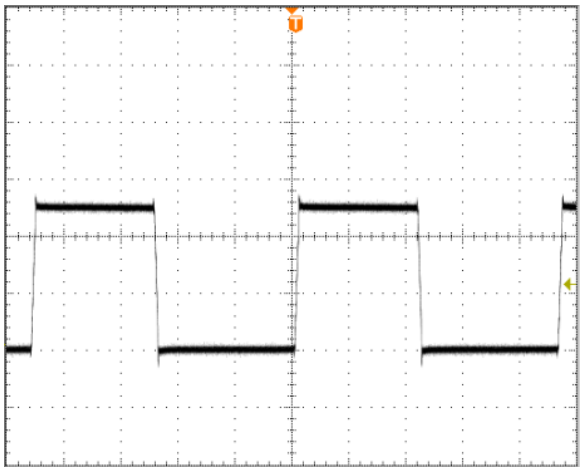

30V p/p 296KHz

Q4, Q7 or Q105 Pin 1

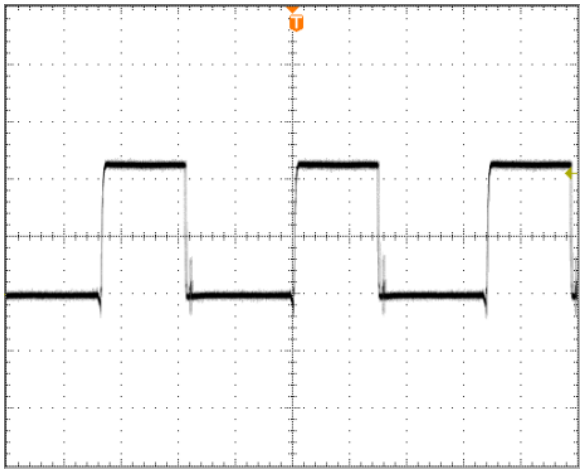

13.5V p/p 296KHz

Q4, Q7 or Q105 Pin 3

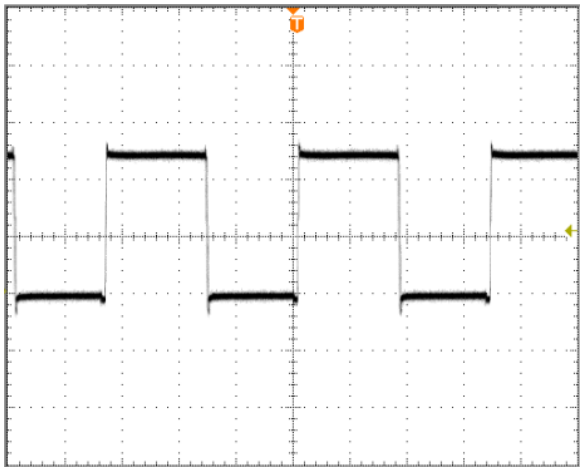

30V p/p 296KHz

Each of the Pin numbers for the Components listed above are the same.

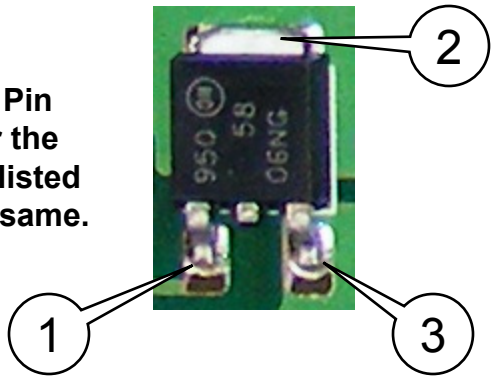

Q5, Q8 or Q106 Pin 3 is Ground

P-DIM (Global Dimming) Explained:
P-DIM (May also be called PWM-DIM, VBR-B, PDS, BCM-VBR-B)

The Video Processor has the output that controls P-DIM. If the Microprocessor is separate from the video processor, then the customer's menu Backlights setting is communicated to the video processor via I2C.

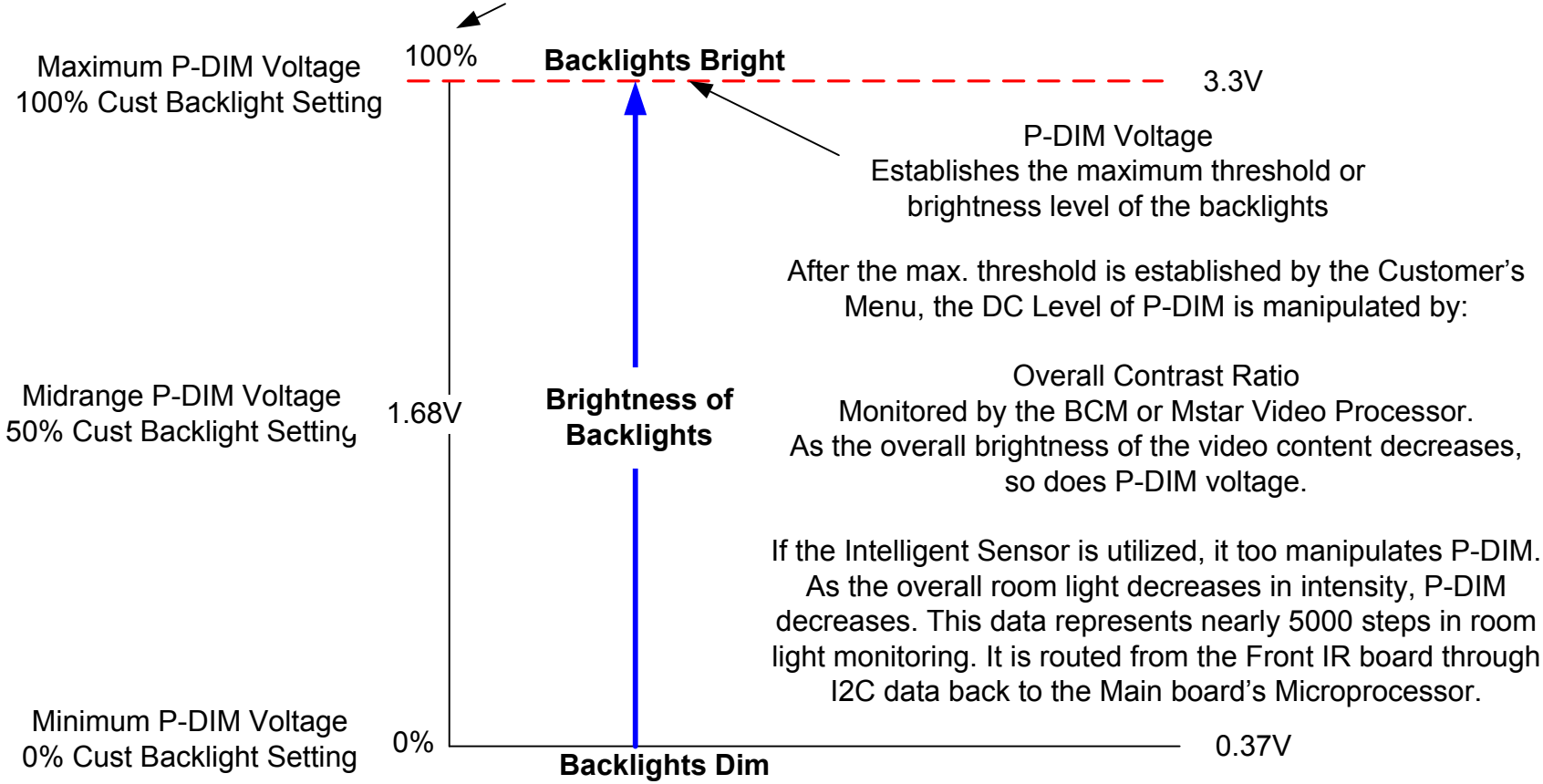

Brightness and Contrast adjustments do not affect P-DIM

Analog Dimming is not used.
It is a fixed voltage. Also called BR1, VBR-A, BCM-VBR-A, ADM

Inverter (Main) Fuse F1 and Inverter (Secondary) Fuse F101 Check

Top Left of the Board
Just under CN1 Connector

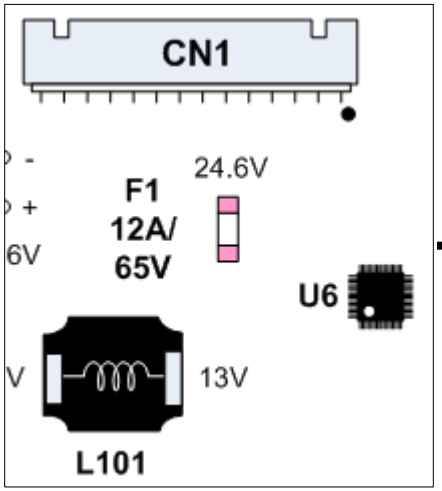

Inverter (Main)

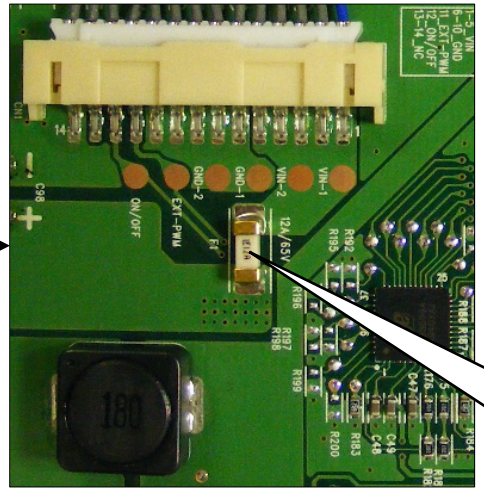

F1 (Diode Mode Check)
1.365V (Red Lead on Fuse)
0.58V (Black Lead on Fuse)

F1
12A/65V

Top Left of the Board
Just to the right of CN101 Connector

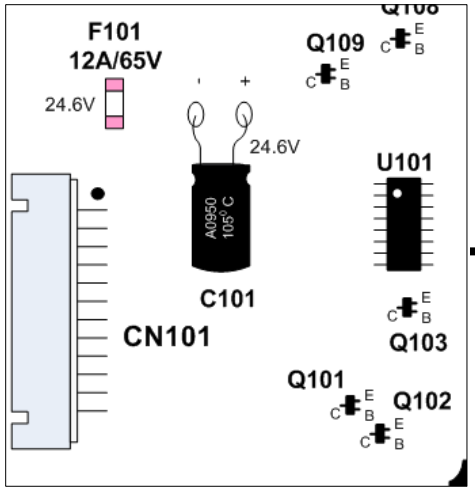

Inverter (Secondary)

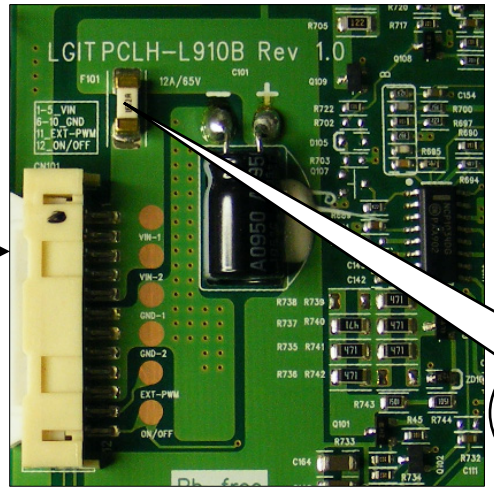

F101 (Diode Mode Check)
1.385V (Red Lead on Fuse)
0.58V (Black Lead on Fuse)

F101
12A/65V

Inverter Crystals Y1, Y501 (Main) and Y501 on (Secondary) Information

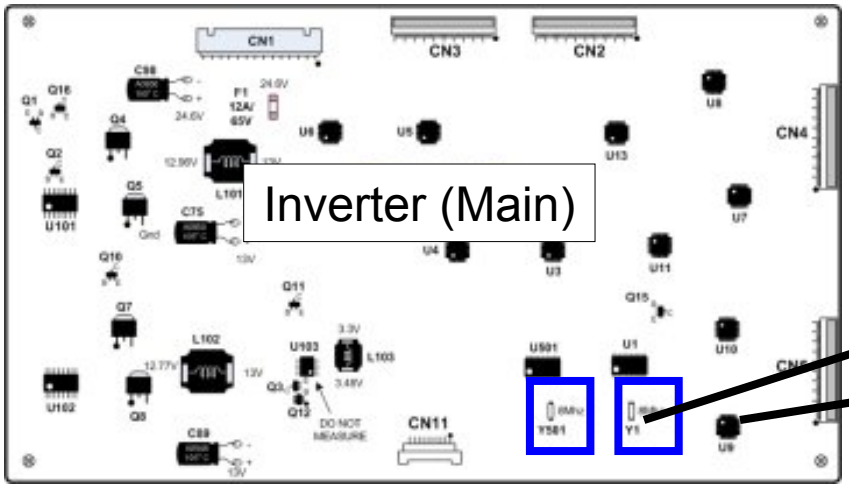

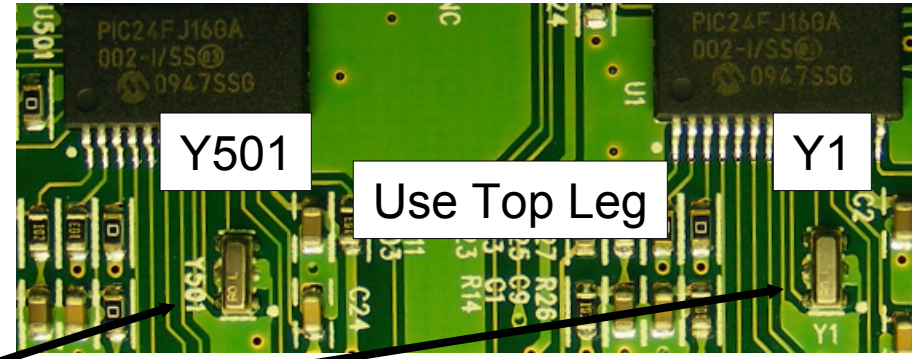

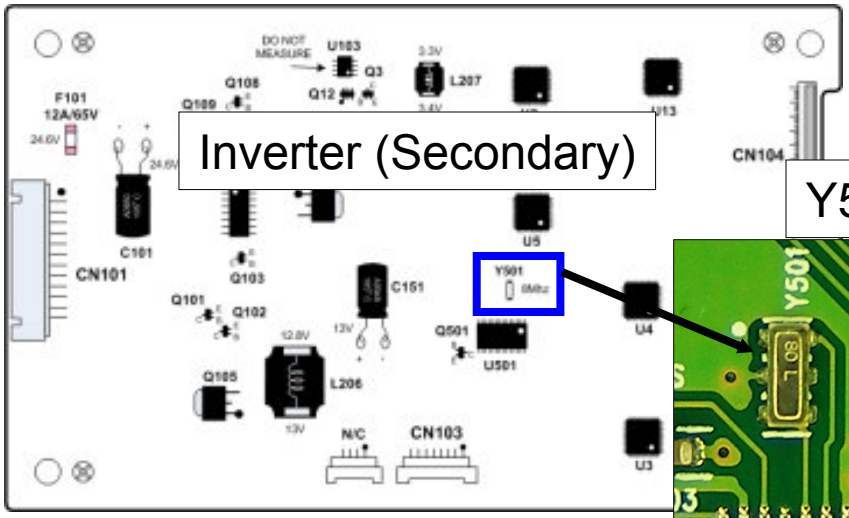

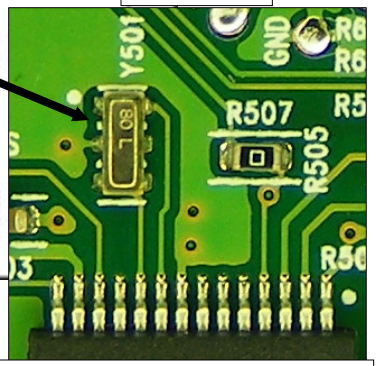

Use Bottom Leg

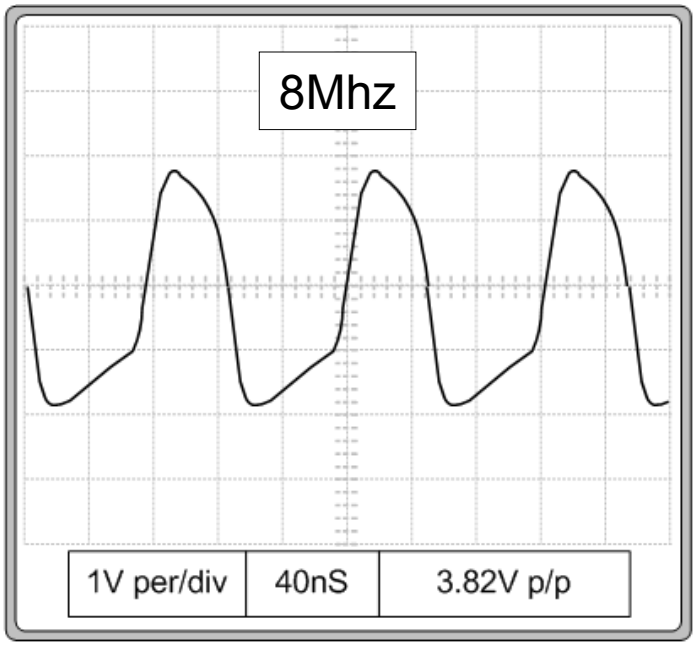

Inverter LED Driver Information

Note: Some of the Vxx numbers are repeated on the Silk Screen between Inverter (Main) and Inverter (Secondary).
But there are a total of 216 (V1 through V216).

The Inverters deliver grounding pulses (Drive Signals) to each of the 216 LED Blocks. This accomplishes Global Dimming and Local Dimming. Each output is labeled Vxx. Grounding each block is accomplished by the 14 switching components, 10 on Inverter (Main) U9~U11 and U13 and 5 on Inverter (Secondary) U2~U5 and U13.

Inverter (Main) has 4 Connectors CN2~CN5 that connect to Extensions boards. The Left hand Extension board (rear view) connects to CN2 and CN3 and the Center Extension board connects to CN4 and CN5.

Example: U5

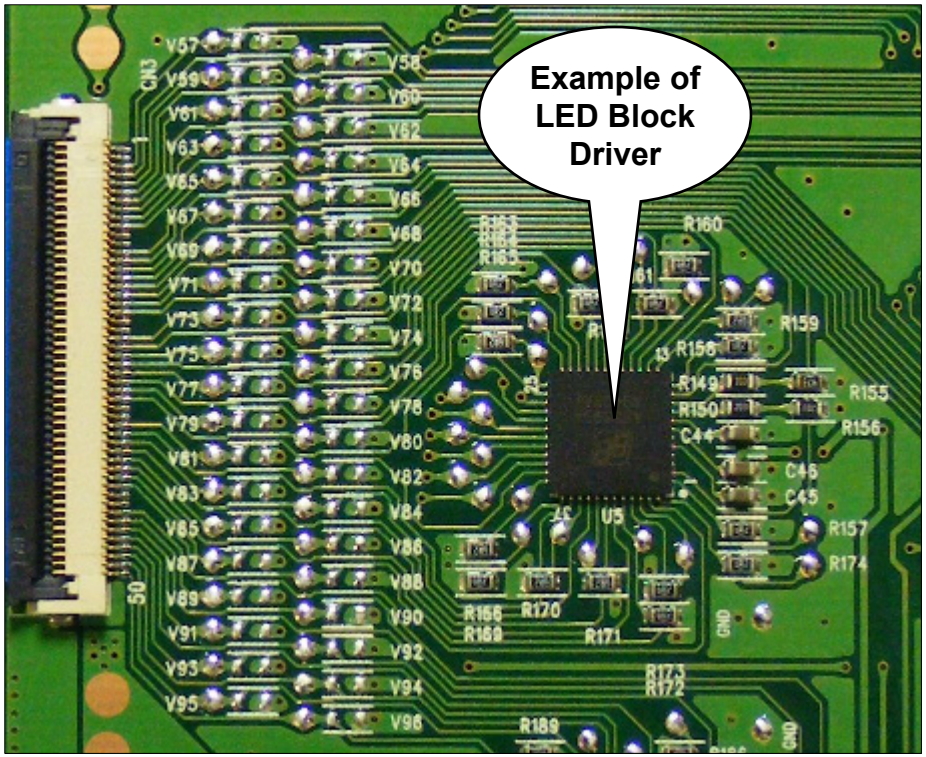

Inverter (Secondary) has 2 Connectors CN104~CN105 that connect to the right hand Extension board (rear view).

Each Extension board has 9 connections to the Backlight LEDs.

Voltage Supplies from Inverter (Secondary) To Extension Board Right

CN104 13V Line Pins
19~20, 29~30, 39~40, 49~50

CN105 13V Line Pins
1~2, 11~12, 21~22,31~32, 41~42

Voltage Supplies from Inverter (Main) To Extension Boards Left and Center

CN2 13V Line Pins
9~10, 11~12, 21~22, 31~32

CN3 13V Line Pins
1~2, 11~12, 21~22, 31~32, 41~42

CN4 13V Line Pins
11~12, 21~22, 31~32, 41~42

CN5 13V Line Pins
9~10, 19~20, 29~30, 39~40, 49~50

LED Drive Signal and Troubleshooting Information

Global Dimming (which affects every LED block at the same time) is accomplished by the P-DIM signal arriving on CN1 pin 11 (Inv Main) and CN101 pin 11 (Inv Secondary). As P-DIM voltage goes up, all drive signals will remain low longer. As P-DIM voltage goes down, all drive signals will remain high longer.
P-DIM has a range of 0.37V to 3.3V.
Local Dimming (which affects individual LED blocks) is also accomplished by these drive signals which are manipulated by the Control Signals entering on CN11 Inv (Main) and CN103 Inv (Secondary).

Drive Signals being delivered to the LED Blocks V1 ~ V216

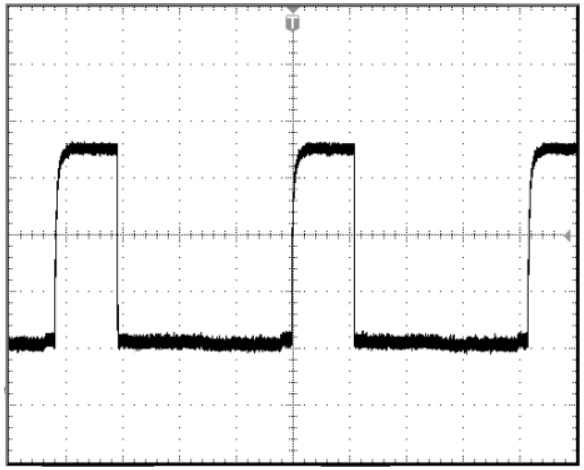

100 IRE
3.68V p/p 120Hz

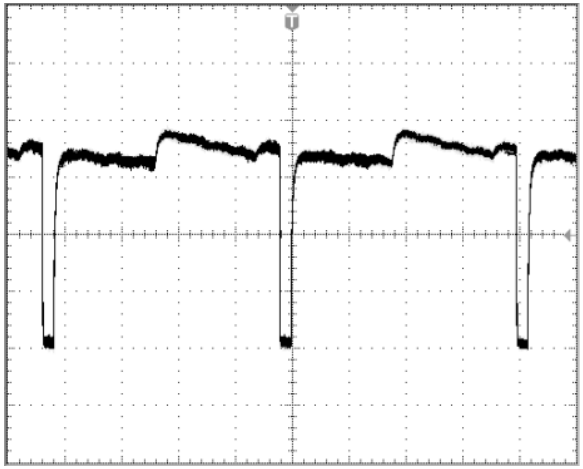

5 IRE
3.88V p/p 120Hz

Note: If a particular block is exhibiting a dimmer level than the other or the overall brightness seems dim, be sure to first check the customer's Menu setting for Backlights. Raise the percentage and see if the overall brightness returns to normal. If not,
1st Check the P-DIM level, it should rise with the percentage shown on screen. 0% = 0.37V to 100% = 3.3V. Follow the P-DIM signal all the way to each Inverter.
2nd Turn off the set and unplug the connector to the Inverters coming from the Main board. If the brightness returns to normal, the Main board is defective. If not, investigate all inverter voltages, if OK, use the grounding of each V block procedure to test the panel's backlight LEDs.

Inverter Board Connector CN3 to Extension (Left) (Voltages)

This gives an example of how the output from an Inverter gets to the individual LED block, but there are 216 blocks (pins) spread out over 6 (50 pin) connectors, please use the Interconnect Diagram for details on all pins.

Inverter Run voltages taken with built in test pattern full white and black screens

CN3 to CN2		Extension Board Left			
Inverter Main		In	Out to	BLOCK	Bright to Dark
CN3	BLOCK	CN2	Panel		Voltage
50	V96	1	CN3 pin 10	V96	0.7V~3.9V
49	V95	2	CN3 pin 09	V95	0.7V~3.9V
48	V94	3	CN3 pin 08	V94	0.7V~3.9V
47	V93	4	CN3 pin 07	V93	0.7V~3.9V
46	V92	5	CN3 pin 06	V92	0.7V~3.9V
45	V91	6	CN3 pin 05	V91	0.7V~3.9V
44	V90	7	CN3 pin 04	V90	0.7V~3.9V
43	V89	8	CN3 pin 03	V89	0.7V~3.9V
42	B+	9	CN3 pin 02	B+	12.55V
41	B+	10	CN3 pin 01	B+	12.55V
40	V88	11	CN4 pin 10	V88	0.7V~3.9V
39	V87	12	CN4 pin 09	V87	0.7V~3.9V
38	V86	13	CN4 pin 08	V86	0.7V~3.9V
37	V85	14	CN4 pin 07	V85	0.7V~3.9V
36	V84	15	CN4 pin 06	V84	0.7V~3.9V
35	V83	16	CN4 pin 05	V83	0.7V~3.9V
34	V82	17	CN4 pin 04	V82	0.7V~3.9V
33	V81	18	CN4 pin 03	V81	0.7V~3.9V
32	B+	19	CN4 pin 02	B+	12.55V
31	B+	20	CN4 pin 01	B+	12.55V

This chart does not show all 50 pins. For all connectors from the Inverters to the Panel, please use the Interconnect Diagram for details on all pins.

Inverter (Main and Secondary) CN1 and CN101 (Voltage and Diode Check)

(1) PDIM Pin 20 can vary according to incoming video IRE level, OSD Backlight setting and then Intelligent Sensor (room light condition) Output from the Video Processor IC900. Range 0.37V to 3.3V.

CN1 "Inverter Main" Connector To P204 "SMPS"

Pin	Label	STBY	Run	Diode Check
1~5	24V	0V	24.6V	0.42V
6~10	GND	GND	GND	GND
11	(1) P-DIM	0V	0.37V~3.3V	Open
12	I-C	0V	2.92V	Open
13	N/C	N/C	N/C	Open
14	ERROR	0V	0V	Open

Inverter On Control

Not Used

CN101 "Inverter Secondary" Connector To P205 "SMPS"

Pin	Label	STBY	Run	Diode Check
1~5	24V	0V	24.6V	0.42V
6~10	GND	GND	GND	GND
11	(1) P-DIM	0V	0.37V~3.3V	Open
12	I-C	0V	2.92V	Open

Inverter On Control

Diode Mode values taken with all Connectors Removed

Inverter (Main) CN11 & Inverter (Secondary) CN103 (Voltage and Diode Check)

Inverter Run voltages taken with built in test pattern

CN11 "Inverter Main" to "Main" P7900

Pin	Label	STBY	Run	Diode Check
1	L_VS	0V	0.05V	Open
2	M0_MOSI	0V	*0.04V~3.26V	Open
3	M0_SCLK	0V	0.23V	Open
4	GND	GND	GND	GND
5	M1_MOSI	0V	*0.04V~3.26V	Open
6	M1_SCLK	0V	0.23V	Open
7	GND	GND	GND	GND
8	S_CS_N	0V	2.6V	1.65V
9	S_MOSI	0V	*0.18V~0.28V	1.61V
10	S_SCLK	0V	2.99V	1.62V

*Black to White

CN103 "Inverter Secondary" to "Main" P7901

Pin	Label	STBY	Run	Diode Check
1	R_VS	0V	0.04V	Open
2	GND	GND	Gnd	GND
3	M2_MOSI	0V	*0.04V~3.2V	Open
4	M2_SCLK	0V	0.23V	Open
5	Gnd	Gnd	Gnd	Gnd
6	n/c	0V	0V	Open
7	n/c	0V	0V	Open
8	Gnd	Gnd	Gnd	Gnd

*Black to White

Diode Mode values taken with all Connectors Removed

Inverter Main and Secondary Local Dimming Control Signals Waveforms

CN11 INVERTER (MAIN) FROM P7900 MAIN BOARD

Inverter Main CN11 pin 01
Black or White Screen

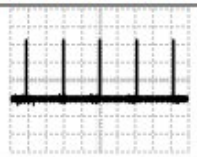

1V per/div	4M Ses	3.66V p/p

Inverter Main CN11 pin 02
Black Screen

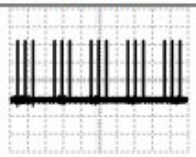

1V per/div	4M Ses	3.70V p/p

Inverter Main CN11 pin 02
White Screen

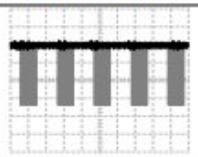

1V per/div	4M Ses	4.22V p/p

Inverter Main CN11 pin 03
Black Screen

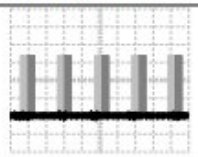

1V per/div	4M Ses	3.70V p/p

Inverter Main CN11 pin 03
White Screen

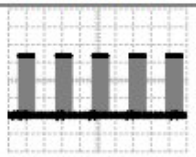

1V per/div	4M Ses	3.96V p/p

Inverter Main CN11 pin 05
Black Screen

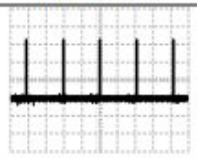

1V per/div	4M Ses	3.66V p/p

Inverter Main CN11 pin 05
White Screen

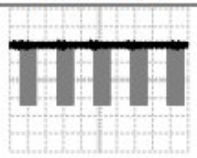

1V per/div	4M Ses	3.98V p/p

Inverter Main CN11 pin 06
Black or White Screen

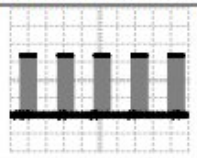

1V per/div	4M Ses	3.98V p/p

Inverter Main CN11 pin 08
Black or White Screen

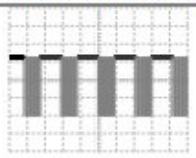

1V per/div	4M Ses	3.76V p/p

Inverter Main CN11 pin 09
Black Screen

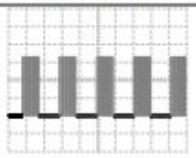

1V per/div	4M Ses	3.66V p/p

Inverter Main CN11 pin 09
White Screen

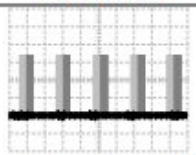

1V per/div	4M Ses	3.88V p/p

Inverter Main CN11 pin 10
Black Screen

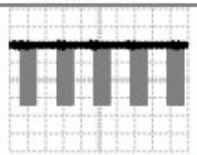

1V per/div	4M Ses	3.88V p/p

Inverter Main CN11 pin 10
White Screen

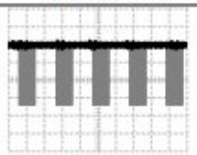

1V per/div	4M Ses	3.68V p/p

For clearer details see the Interconnect Diagram

CN103 INVERTER (SECONDARY) FROM P7901 MAIN BOARD

Inverter Secondary CN103 pin 01
Black or White Screen

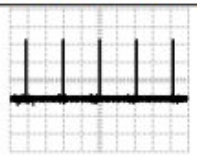

1V per/div	4M Ses	3.52V p/p

Inverter Secondary CN103 pin 03
Black Screen

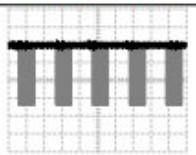

1V per/div	4M Ses	3.56V p/p

Inverter Secondary CN103 pin 03
White Screen

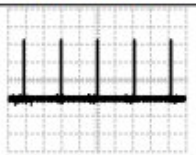

1V per/div	4M Ses	3.56V p/p

Inverter Secondary CN103 pin 04
Black or White Screen

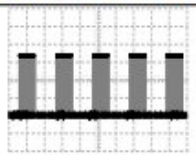

1V per/div	4M Ses	3.62V p/p

MAIN BOARD SECTION

The Main board receives its operational B+ from the Power Supply via P8000.
There are two LVDS cable feeds that are output from the on-board T-CON (TFT Driver) section directly to the Panel. These carry the duel 12 bit LVDS Video signals and the TruMotion 60Hz duel 12 bit LVDS. These signals have already been prepared for the Panel's H and V boards.
The Main board also includes the Tuner, Audio and Audio/Video inputs and selection circuits.

Input Voltages from SMPS.

STAND-BY
- **STBY 3.5V (P8000 pins 9~12)**

RUN
- **12V pins 13 and 14**
- **24V pins 17 and 18.**

The Main board also develops several B+ sources on the board.

STAND-BY VOLTAGES
- **3.3V_ST (Voltage direct from SMPS)**

LVDS
- **Panel_VCC (12V Not generated, but switched from the 12V arriving from the SMPS.**

TUNER and VSB CIRCUIT
- **5V_Normal which is used to make 5V TU**
- **5V_TU**
- **3.3V_TU**
- **1.26V_TU**

WIRELESS VOLTAGES
- **24V (Switched from 24V from SMPS)**

GENERAL
- **5V_Normal**
- **5V_EXT**
- **5V USB**

AUDIO
- **1.8V**
- **3.3V**

BCM IC900 Video Processors
- **1.2V**

IC9301 Tru-Motion and Dimming IC.
- **1.26V_MEMC, 1.5V_MEMC, , D1.5V, D1.8V, and 3.3V**

•T-CON IC9001
- **3.3V_VCC, -5V_VGL, 25V_VGH, 16V_VDD and HVDD (7.7V)**

Main Board Layout

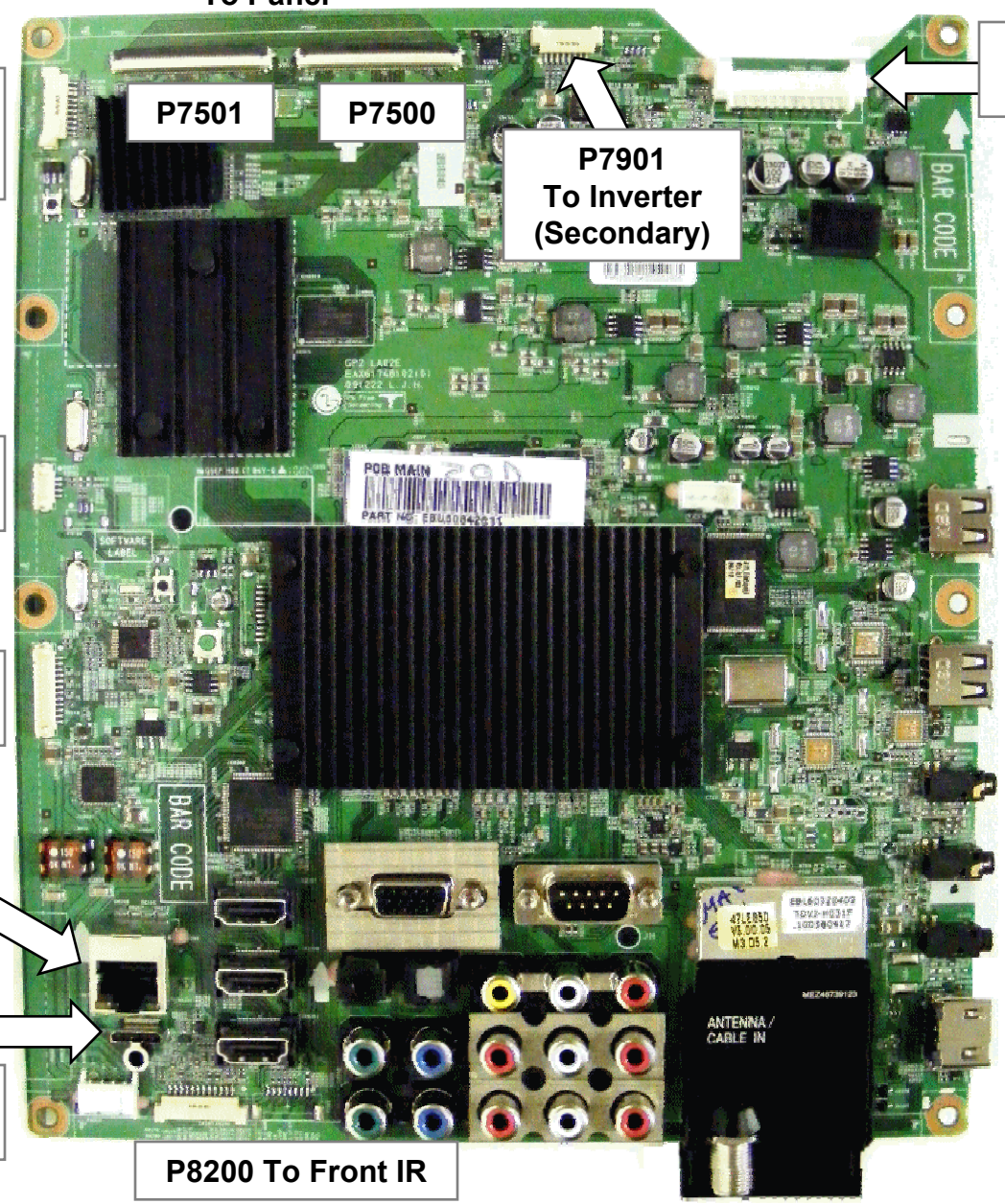

47LE8500 Main Layout

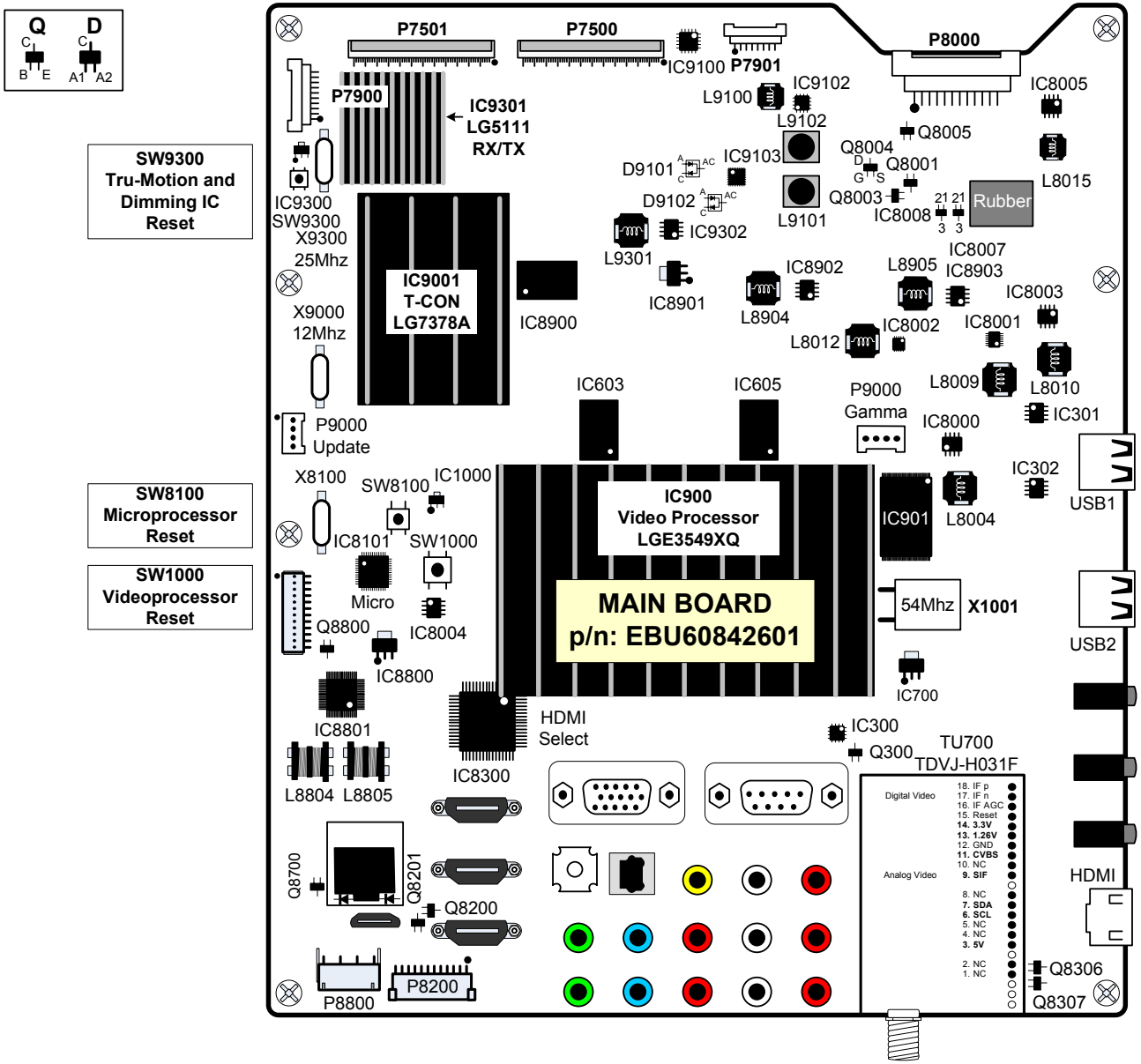

47LE8500 Main (Front Side) Component Voltages

IC300 — Earphone Amp

Pin	
[1]	0V
[2]	0V
[3]	0V
[4]	0V
[5]	0V
[6]	3.3V
[7]	3.3V
[8]	(-1.8V)
[9]	(-0.8V)
[10]	Gnd
[11]	0.9V
[12]	1.8V
[13]	3.3V
[14]	3.3V
[15]	Gnd
[16]	0V

IC301 — Switched 5V for USB 2

Pin	
[1]	Gnd
[2]	5V (In)
[3]	5V
[4]	3.3V
[5]	3.3V
[6]	5V (Out)
[7]	5V (Out)
[8]	n/c

IC302 — Switched 5V for USB 1

Pin	
[1]	Gnd
[2]	5V (In)
[3]	5V
[4]	3.3V
[5]	3.3V
[6]	5V (Out)
[7]	5V (Out)
[8]	n/c

Q300 — Earphone Mute L Out

Pin	
B	0V
C	3.3V
E	Gnd

Q8001 — PANEL_VCC Control 1st Driver

Pin	
B	0V
C	0.68V
E	Gnd

IC700 — (+1.26V_TU) Regulator

Pin	
[1]	0V (Gnd)
[2]	1.26V (Out)
[3]	3.3V (In)

IC1000 — SOC Reset Generator

Pin	
[1]	3.32V (In)
[2]	0V (Gnd)
[3]	3.3V (Out)

IC8000 — 5V Regulator for USB

Pin	
[1]	11.79V (In)
[2]	5V (Out)
[3]	5V (Out)
[4]	10.5V
[5]	3.3V
[6]	0.8V
[7]	4.99V
[8]	0V (Gnd)

IC8001 — D1.2V and A1.2V Regulator

Pin	
[1]	0V (Gnd)
[2]	3.3V
[3]	0V (Gnd)
[4]	1.2V
[5]	3.3V
[6]	n/c
[7]	4.46V
[8]	3.3V
[9]	3.3V
[10]	3.3V
[11]	1.2V
[12]	Gnd
[13]	3.3V
[14]	0.8V

Q8003 — PANEL_VCC Control 2nd Driver

Pin	
B	0.679V
C	0V
E	Gnd

Q8004 — PANEL_VCC Switch

Pin	
S	11.8V (In)
G	1.8V (Enable)
D	11.8V (Out)

IC8002 — (D1.8V) Regulator

Pin	
[1]	5V
[2]	3.34V (In)
[3]	1.8V (Out)
[4]	Gnd
[5]	Gnd
[6]	0.9V
[7]	0.9V
[8]	1V
[9]	2.38V
[10]	3.36V (PWR On/Off1 Ctl)

IC8003 — (+5V_NORMAL) Regulator

Pin	
[1]	0V (Gnd)
[2]	11.8V (In)
[3]	0V (Gnd)
[4]	0.8V
[5]	0.86V
[6]	3.37V (PWR On/Off2 Ctl)
[7]	5V (In)
[8]	5V (In)

IC8004 — A2.5V Regulator for USB

Pin	
[1]	n/c
[2]	3.26V (In)
[3]	3.26V (In)
[4]	n/c
[5]	n/c
[6]	2.55V (Out)
[7]	0.8V
[8]	0V (Gnd)

Q8005 — INV_ON Driver

Pin	
B	0V (INV ON) En
C	3.1V (Out)
E	Gnd

Q8200 — IR Buffer 2nd

Pin	
B	0.02V
C	3.4V
E	Gnd

Q8201 — IR Buffer 1st

Pin	
B	0V
C	3.3V
E	Gnd

IC8005 — (+3.3V_NORMAL) Regulator

Pin	
[1]	0V (Gnd)
[2]	11.8V (In)
[3]	0V (Gnd)
[4]	0.8V
[5]	0.86V
[6]	3.36V (PWR On/Off2 Ctl)
[7]	3.36V (Out)
[8]	3.36V (Out)

IC8007 — Power Det Gen (+12V and +3.5V)

Pin	
[1]	0V (Gnd)
[2]	3.6V (In)
[3]	3.5V (Out)

IC8008 — Power Det Gen (+24V)

Pin	
[1]	0V (Gnd)
[2]	3.6V (In)
[3]	3.7V (Out)

IC8800 — (+1.8V_AMP) Regulator

Pin	
[1]	0V (Gnd)
[2]	1.8V (Out)
[3]	3.295V (In)

IC8901 — (+1.5V_MEMC) Regulator

Pin	
[1]	0V (Gnd)
[2]	1.5V (Out)
[3]	3.3V (In)

Q8306 — HDMI Det

Pin	
B	0V
C	3.3V
E	Gnd

Q8307 — HDMI Det

Pin	
B	0V
C	4.18V
E	Gnd

Q8700 — Wireless PWR Turns on Q8701

Dongle Out	
B	0.66V (0.0V Dongle In)
C	0.14V (24V Dongle In)
E	Gnd

IC8902 — (+1.26V_MEMC) Regulator

Pin	
[1]	0V (Gnd)
[2]	11.8V (In)
[3]	0V (Gnd)
[4]	0.8V
[5]	0.7V
[6]	3.36V (PWR On/Off2 Ctl)
[7]	1.3V (Out)
[8]	1.3V (Out)

IC8903 — (+3.3V_MEMC) Regulator

Pin	
[1]	0V (Gnd)
[2]	11.8V (In)
[3]	0V (Gnd)
[4]	0.8V
[5]	0.8V
[6]	3.36V (PWR On/Off2 Ctl)
[7]	3.3V (Out)
[8]	3.3V (Out)

IC9100 — P-GAMMA Chip

Pin	
[1]	3.3V
[2]	0V (Gnd)
[3]	3.3V (In)
[4]	0V (Gnd)
[5]	6.8V
[6]	6.8V
[7]	15.3V
[8]	15.3V
[9]	n/c
[10]	13.47V
[11]	12.75V
[12]	11.8V
[13]	10V
[14]	5.96V
[15]	4.06V
[16]	15.3V
[17]	0V
[18]	2.96V
[19]	2.33V
[20]	3.3V (In)

Q8800 — AMP_MUTE Pin 25 IC8801

Pin	
B	0V
C	3.336V
E	Gnd

IC9102 — DC to DC HVDD T-CON

Pin	
[1]	0V (Gnd)
[2]	11.72V (In)
[3]	11.72V (In)
[4]	3.25V
[5]	3.2V
[6]	0V
[7]	0V
[8]	11.7V
[9]	0V (Gnd)
[10]	1.13V
[11]	0V (Gnd)
[12]	0V (Gnd)
[13]	0V (Gnd)
[14]	7.7V
[15]	7.7V (HVDD)
[16]	0V (Gnd)

IC9300 — Reset for LG5111

Pin	
[1]	3.32V (In)
[2]	0V (Gnd)
[3]	3.34V (Out)

IC9302 — (1.8V_L/Dimming) Regulator

Pin	
[1]	0V (Gnd)
[2]	11.8V (In)
[3]	0V (Gnd)
[4]	0.8V
[5]	0.76V
[6]	3.34V (PWR On/Off2 Ctl)
[7]	1.8V (In)
[8]	1.8V (In)

D9101 — VGH/VDD Rectifyer

Pin	
A	15.4V
AC	22.2V
C	27.4V (VGH)

D9102 — VGL/VCC Rectifyer

Pin	
A	(-5V VGL)
AC	(-1.9V)
C	0V

47LE8500 Main (Back Side) Layout

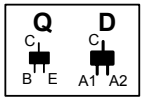

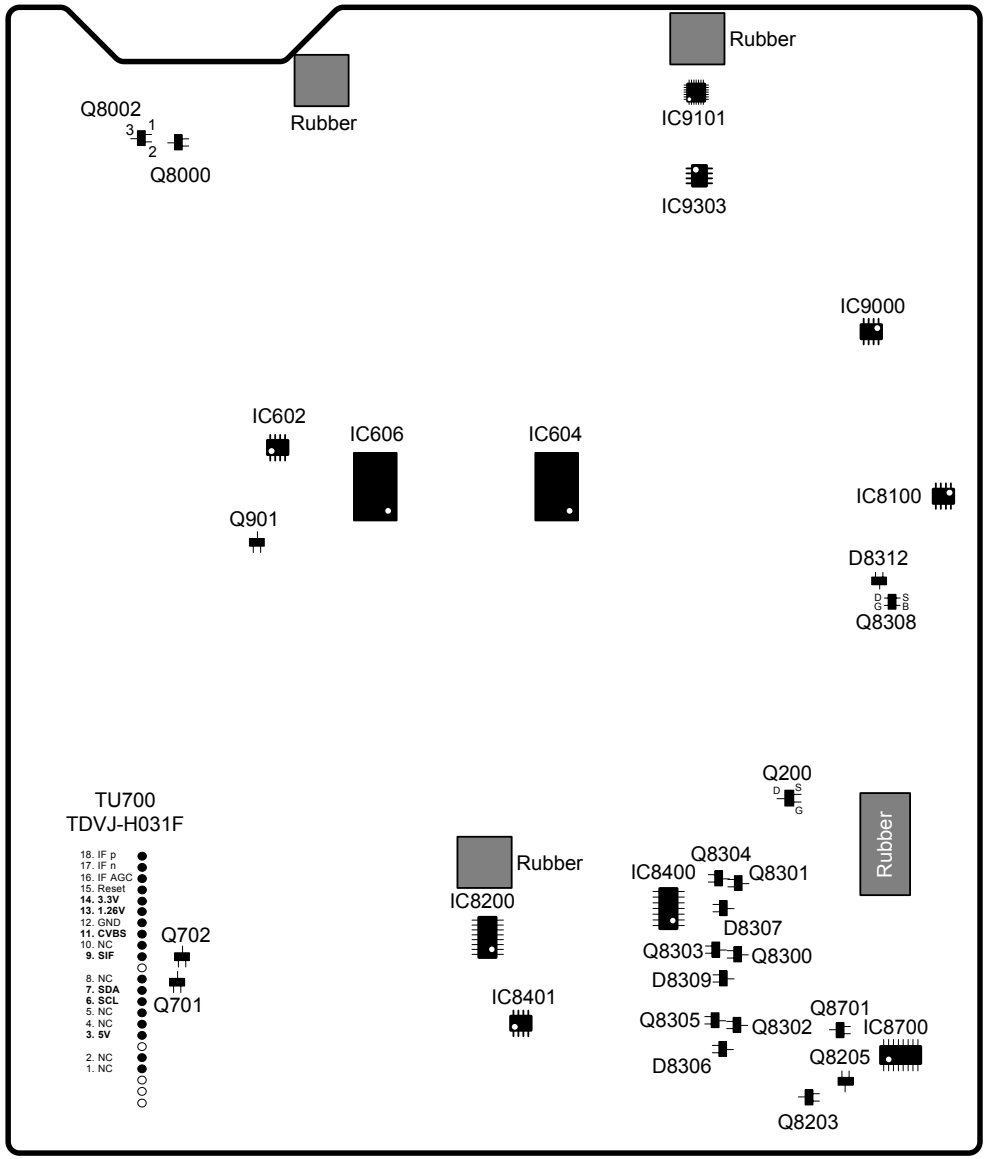

47LE8500 Main (Back Side) Component Voltages

IC602 — D1.8V Regulator

Pin	
[1]	0V (Gnd)
[2]	3.29V (PWR On/Off1 Ctl)
[3]	0.9V (DDR_VTT)
[4]	0.93V
[5]	1.83V
[6]	3.38V (In)
[7]	1.8V (Out)
[8]	0.91V (DDR_VTT)

IC8100 — EEPROM Micro

Pin	
[1]	0V (Gnd)
[2]	0V (Gnd)
[3]	0V (Gnd)
[4]	0V (Gnd)
[5]	3.37V
[6]	3.37V
[7]	0V (Gnd)
[8]	3.37V

IC8200 — RS232 Routing

Pin	
[1]	0V
[2]	0V
[3]	0V
[4]	0V
[5]	0V
[6]	(-5.47V)
[7]	n/c (5.59V)
[8]	n/c (0V)
[9]	n/c (3.3V)
[10]	n/c (0.2V)
[11]	n/c (3.3V)
[12]	3.35V
[13]	0V
[14]	(-5.47V)
[15]	0V (Gnd)
[16]	3.37V

IC8400 — RGB H/V Sync

Pin	
[1]	1.9V
[2]	1.9V
[3]	4.4V
[4]	0V
[5]	0.9V
[6]	n/c (4.5V)
[7]	0V (Gnd)
[8]	n/c (4.5V)
[9]	n/c (1.9V)
[10]	n/c (1.9V)
[11]	n/c (4.5V)
[12]	0.9V
[13]	0.9V
[14]	5V

IC8401 — EDID Data PC

Pin	
[1]	0V (Gnd)
[2]	0V (Gnd)
[3]	0V (Gnd)
[4]	0V (Gnd)
[5]	0.7V
[6]	4.1V
[7]	4.5V
[8]	4.5V (In)

IC9000 — Serial Flash T-CON

Pin	
[1]	0.06V
[2]	0.67V
[3]	3.3V (In)
[4]	0V (Gnd)
[5]	0V
[6]	0.34V
[7]	3.31V (In)
[8]	3.34V (In)

IC8700 — Wireless Buffer

Pin	
[1]	0V (3.3V Dongle In)
[2]	3.3V (0.3V Dongle In)
[3]	n/c
[4]	n/c
[5]	n/c
[6]	Gnd
[7]	Gnd
[8]	Gnd
[9]	n/c
[10]	0.02V
[11]	0V
[12]	3.3V
[13]	0V (3.3V Dongle In)
[14]	3.3V
[15]	3.3V
[16]	3.3V

IC9303 — EEPROM for LG5111

Pin	
[1]	0V (Gnd)
[2]	0V (Gnd)
[3]	0V (Gnd)
[4]	0V (Gnd)
[5]	3.37V
[6]	3.37V
[7]	3.34V
[8]	3.37V (In)

D8306, 7, 9 — 5V Pull Up Routing HDMI SCL/SDA

Pin	
A1	5.04V
C	4.58V
A2	0V

D8312 — 3.5V Pull Up HDMI CEC

Pin	
A1	0V
C	3.26V
A2	3.2V

Q200 — (1.8V_HDMI) Switch

Pin	
S	1.83V (Out)
G	3.35V (PWR On/Off2 Ctl)
D	1.83V (In)

Q701 — Tuner SIF (Sound) Buffer

Pin	
B	0.16V
C	Gnd
E	0.83V

Q702 — Tuner Video (Analog) Buffer

Pin	
B	2.05V
C	2.75V
E	Gnd

Q901 — FLASH_WP for IC901

Pin	
B	0V (Flash_WP)
C	3.36V
E	Gnd

Q8000 — RL_ON (PWR_On) 1st Driver

Pin	
B	0.66V
C	0V
E	Gnd

Q8002 — PWR_ON Switch

Pin	
[1]	3.36V (In)
[2]	0V
[3]	3.3V (Out)

Q8203 — IR Wireless Pass 2nd Driver

Pin	
B	0V
C	3.3V
E	Gnd

Q8205 — IR Wireless Pass 1st Driver

Pin	
B	0.6V
C	0V
E	Gnd

Q8300, 2 — HDMI 2 Det

Pin	
B	4.2V
C	0V
E	Gnd

Q8303, 4, 5 — HDMI 3 Det

Pin	
B	0V
C	4.2V
E	Gnd

Q8308 — CEC Remote HDMI CEC

Pin	
[B]	2.72V
[G]	2.73V
[S]	3.27V
[D]	3.37V

Q8701 — IR Wireless Pass 2nd Driver

Pin	
G	24.5V (2.3V Dongle I
S	24V
D	0V (24.5V Dongle In)

Main Board X9001 and X9000 Crystal Checks

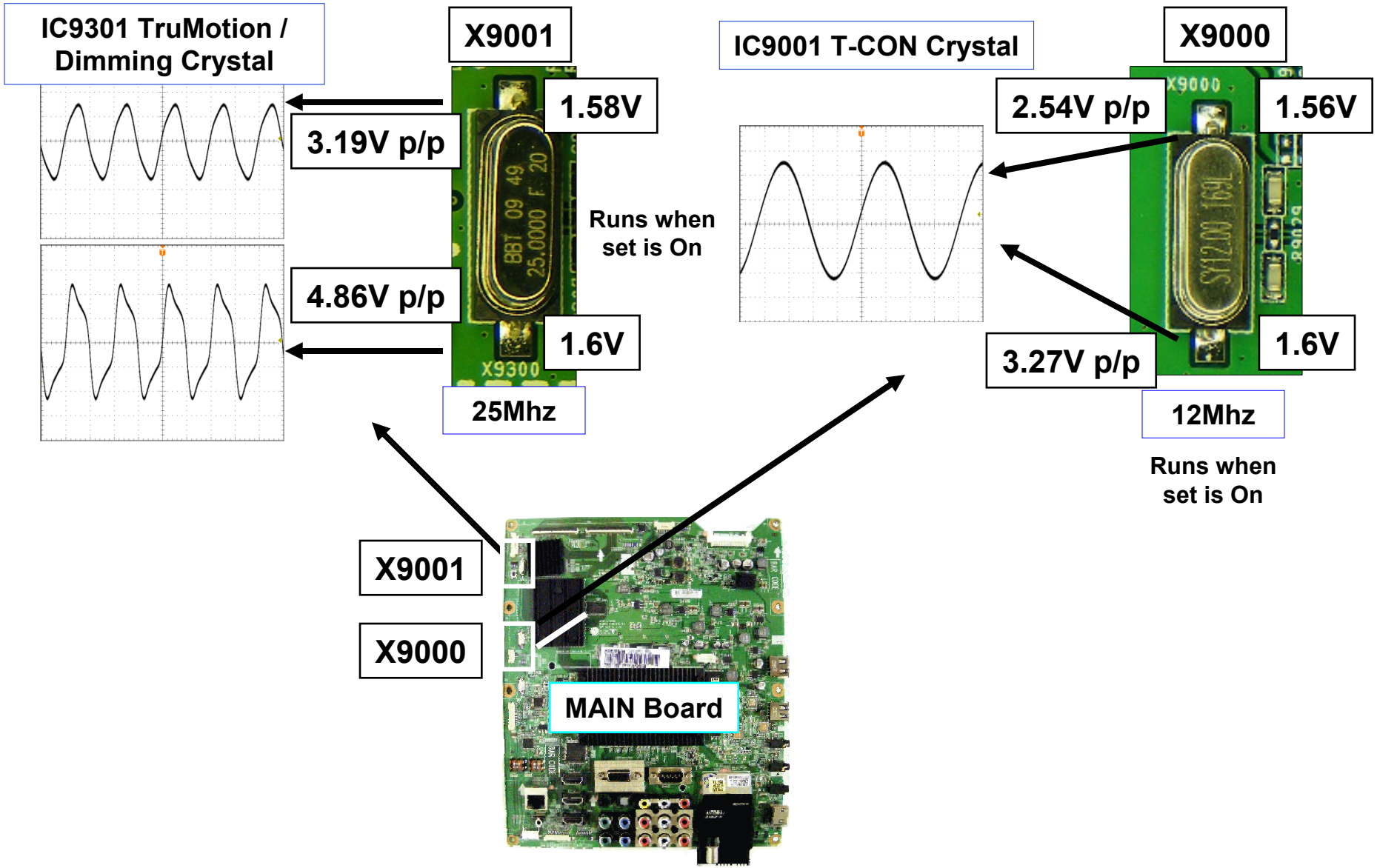

Main Board X8100 and X1001 Crystal Checks

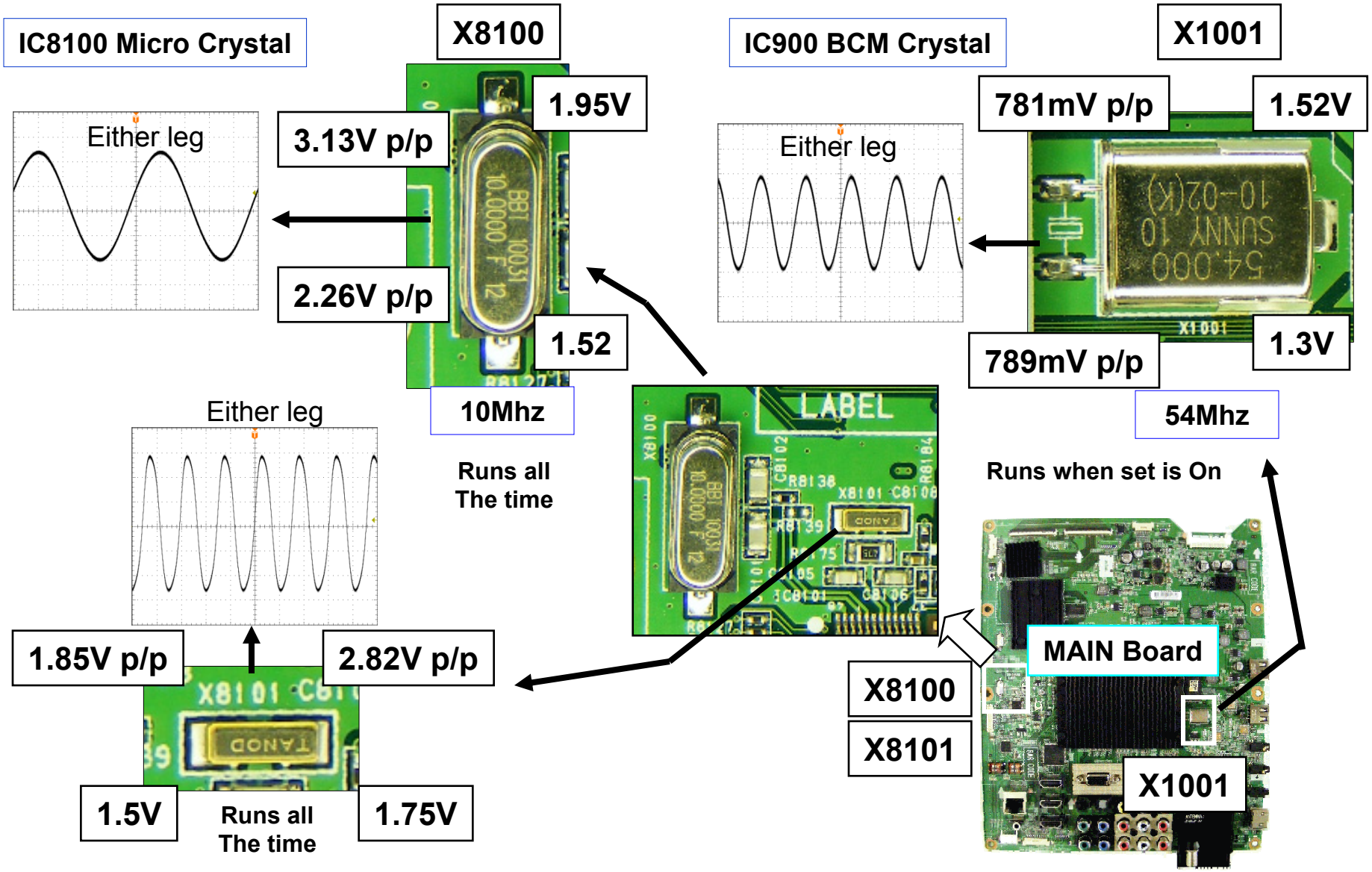

Main Board DC to DC Converter (Voltages for Panel) Checks

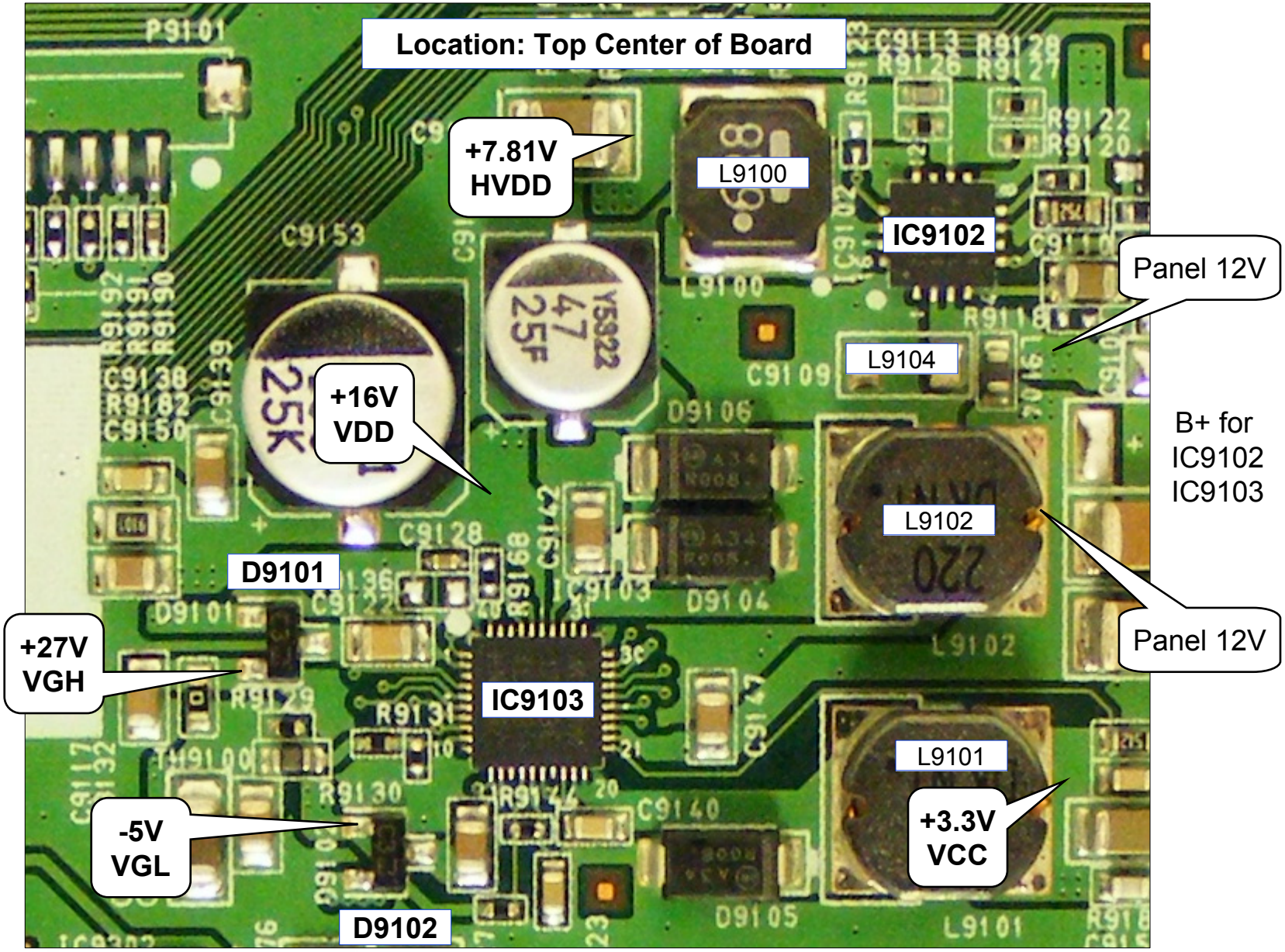

Main Board Additional Panel Voltage Checks

Location: Top Left of Board

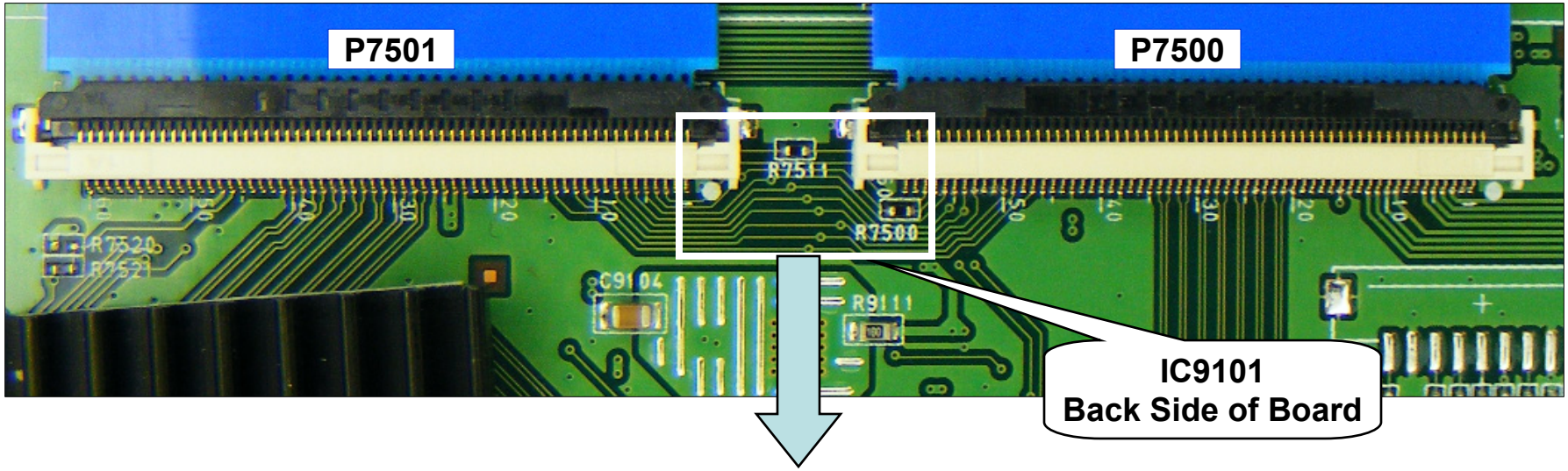

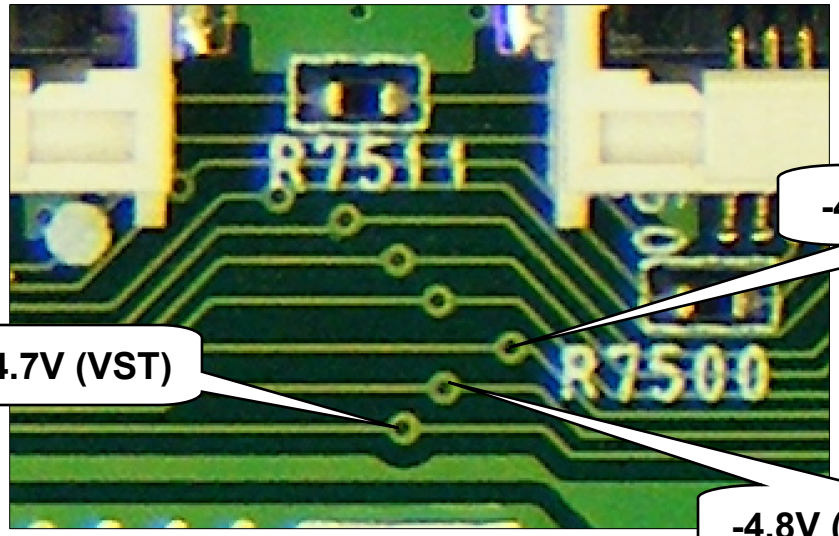

From IC9101 Pin 21

-4.8V (VDD-ODD)

From IC9101 Pin 19

-4.7V (VST)

From IC9101 Pin 20

-4.8V (VDD-EVEN)

Main Board Connector P8000 to Power Supply Voltage and Diode Check

P8000

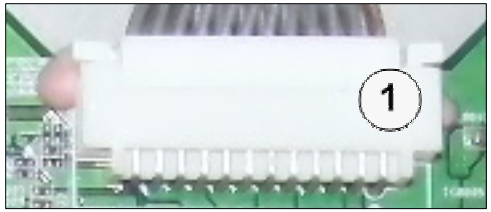

Odd Pins Front Row

P8000 "Main Board" to P201 "SMPS"

Pin	Label	STBY	Run	Diode Check
1	**PWR-ON**	0V	3.3V	Open
2-4	**24V**	0V	24.6V	Open
5-8	**Gnd**	Gnd	Gnd	Gnd
9-12	**3.5V**	3.45V	3.44V	1.24V
13-15	**Gnd**	Gnd	Gnd	Gnd
16	**n/c**	n/c	n/c	Open
17	**12V**	0V	11.9V	Open
18	**INV-ON**	0V	2.92V	1.63V
19	**12V**	0V	11.9V	Open
20	(1) **P-DIM**	0V	0.37V~3.3V	Open
21	**12V**	0V	11.9V	Open
22	**n/c**	n/c	n/c	Open
23	**n/c**	n/c	n/c	Open
24	**ERROR**	0V	0V	Gnd

Diode Mode values taken with all Connectors Removed

(1) PDIM Pin 20 can vary according to incoming video IRE level, OSD Backlight setting and Intelligent Sensor (room light condition). Range 0.37V to 3.3V.

Main Board Connector P7500 to the Panel Voltage and Diode Check

P7500 Connector "Main" to the "Panel"

There are no Stand-By Voltages for the Connector
Diode Mode values taken with all Connectors Removed

Pin	Label	Run	Diode Check
1	Gnd	Gnd	Gnd
2	GMA1	14.91V	Open
3	GMA3	13.5V	Open
4	GMA4	12.78V	Open
5	GMA6	11.88V	Open
6	GMA7	10.02V	Open
7	GMA9	8.02V	Open
8	GMA10	7.48V	Open
9	GMA12	5.99V	Open
10	GMA13	4.08V	Open
11	GMA15	2.98V	Open
12	GMA16	2.35V	Open
13	GMA18	1.06V	Open
14	Gnd	Gnd	Gnd
15	OPT_N	1.06V	2.06V
16	H_CONV	1.07V	Gnd
17	VST_IN	0V	1.06V
18	POL	0.62V	1.06V
19	SOE	0.3V	1.06V
20	Gnd	Gnd	Gnd

Pin	Label	Run	Diode Check
21	LV0+	1.06V	0.9V
22	LV0-	1.27V	1.09V
23	LV1+	1.4V	0.9V
24	LV1-	1.3V	1.09V
25	LV2+	1.03V	0.9V
26	LV2-	1.3V	1.09V
27	LVCLK+	1.16V	0.9V
28	LVCLK-	1.17V	1.09V
29	LV3+	1.07V	0.9V
30	LV3-	1.27V	1.09V
31	LV4+	1.02V	0.9V
32	LV4-	1.3V	1.09V
33	LV5+	1.02V	0.9V
34	LV5-	1.3V	1.09V
35	Gnd	Gnd	Gnd
36	**VCC**	**3.3V**	**1.64V**
37	**VCC**	**3.3V**	**1.64V**
38	Gnd	Gnd	Gnd
39	**HVDD**	**7.81V**	**Open**
40	**HVDD**	**7.81V**	**Open**

Pin	Label	Run	Diode Check
41	**VDD**	**15.57V**	**Open**
42	**VDD**	**15.57V**	**Open**
43	Gnd	Gnd	Gnd
44	VCOM_IN	6.86V	Open
45	VCOM_FB	6.87V	Open
46	Gnd	Gnd	Gnd
47	**VST**	**(-4.7V)**	**1.5V**
48	**VGL**	**(-5V)**	**0.6V**
49	**VDD_EVEN**	**(-4.8V)**	**1.5V**
50	**VDD_ODD**	**(-4.8V)**	**1.5V**
51	**VGI_P (VGL)**	**(-5V)**	**0.6V**
52	**VGI_N (VGH)**	**27.4V**	**Open**
53	CLK6	8V	1.5V
54	CLK5	8V	1.5V
55	CLK4	8V	1.5V
56	CLK3	8V	1.5V
57	CLK2	8V	1.5V
58	CLK1	8V	1.5V
59	Z_OUT	7.7V	Open
60	Gnd	Gnd	Gnd

Main Board Connector P7501 to the Panel Voltage and Diode Check

P7501 Connector "Main" to the "Panel"

There are no Stand-By Voltages for the Connector
Diode Mode values taken with all Connectors Removed

Pin	Label	Run	Diode Check	Pin	Label	Run	Diode Check	Pin	Label	Run	Diode Check
1	Gnd	Gnd	Gnd	**21**	**HVDD**	**7.81V**	**Open**	41	Gnd	Gnd	Gnd
2	Z_OUT	7.7V	Open	**22**	**HVDD**	**7.81V**	**Open**	42	SOE	0.3V	1.06V
3	CLK1	8V	1.5V	23	Gnd	Gnd	Gnd	43	POL	0.62V	1.06V
4	CLK2	8V	1.5V	**24**	**VCC**	**3.3V**	**1.64V**	44	VST_IN	0V	1.06V
5	CLK3	8V	1.5V	**25**	**VCC**	**3.3V**	**1.64V**	45	H_CONV	1.07V	Gnd
6	CLK4	8V	1.5V	26	Gnd	Gnd	Gnd	46	OPT_N	1.06V	2.06V
7	CLK5	8V	1.5V	27	RV0+	1.07V	1.09V	47	Gnd	Gnd	Gnd
8	CLK6	8V	1.5V	28	RV0-	1.12V	0.9V	48	GMA18	1.06V	Open
9	**VGH**	**27.4V**	**Open**	29	RV1+	1.13V	1.09V	49	GMA16	2.35V	Open
10	**VGH**	**(-5V)**	**0.6V**	30	RV1-	1.23V	0.9V	50	GMA15	2.98V	Open
11	**VGH_ODD**	**(-4.8V)**	**1.5V**	31	RV2+	1.13V	1.09V	51	GMA13	4.08V	Open
12	**VGH_EVEN**	**(-4.8V)**	**1.5V**	32	RV2-	1.22V	0.9V	52	GMA12	5.99V	Open
13	**VGL**	**(-5V)**	**0.6V**	33	RVCLK+	1.17V	1.09V	53	GMA10	7.48V	Open
14	**VST**	**(-4.7V)**	**1.5V**	34	RVCLK-	1.18V	0.9V	54	GMA9	8.02V	Open
15	Gnd	Gnd	Gnd	35	RV3+	1.08V	1.09V	55	GMA7	10.02V	Open
16	VCOM_FB	6.87V	Open	36	RV3-	1.27V	0.9V	56	GMA6	11.88V	Open
17	VCOM_IN	6.86V	Open	37	RV4+	1.12V	1.09V	57	GMA4	12.79V	Open
18	Gnd	Gnd	Gnd	38	RV4-	1.22V	0.9V	58	GMA3	13.5V	Open
19	**VDD**	**15.57V**	**Open**	39	RV5+	1.13V	1.09V	59	GMA1	14.91V	Open
20	**VDD**	**15.57V**	**Open**	40	RV5-	1.22V	0.9V	60	Gnd	Gnd	Gnd

Main Board Connector P1200 to (Ft. IR/Intelligent Sensor) Voltage and Diode Check

P8200 Connector "MAIN Board" To P100 "IR Board"

Pin	Label	STBY	Run	Diode Check
1	(1) SCL	3.45V	3.45V	Open
2	(1) SDA	3.45V	3.45V	Open
3	Gnd	Gnd	Gnd	Gnd
4	KEY 1	3.29V	3.29V	1.9V
5	KEY 2	3.29V	3.29V	1.9V
6	3.5V_ST	3.45V	3.45V	1.24V
7	Gnd	Gnd	Gnd	Gnd
8	LED_LOGO	0V	0V	Open
9	(2) IR	1.57V	1.54V	Open
10	Gnd	Gnd	Gnd	Gnd
11	+3.3V_Normal	0V	3.3V	0.59V
12	LED_R/BUZZ	0V	0V	Open

P8200

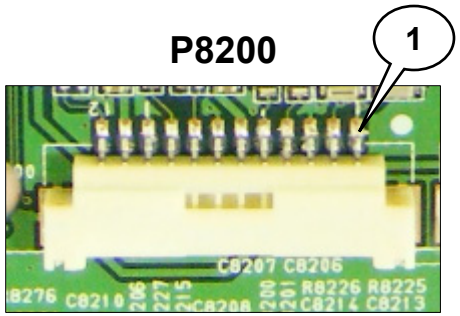

(1) Clock pulses only present when Intelligent Sensor is turned on. (3.7V p/p)
(2) IR pulses (1.6V p/p)

Diode Mode values taken with all Connectors Removed

Main P7900 / P7901 (Voltage and Diode Check)

Inverter Run voltages taken with built in test pattern

P7900 "Main" to "Inverter Main" CN11

Pin	Label	STBY	Run	Diode Check
1	L_VS	0V	0.05V	1.08V
2	M0_MOSI	0V	*0.04V~3.26V	1.08V
3	M0_SCLK	0V	0.23V	1.08V
4	GND	GND	GND	GND
5	M1_MOSI	0V	*0.04V~3.26V	1.08V
6	M1_SCLK	0V	0.23V	1.08V
7	GND	GND	GND	GND
8	S_CS_N	0V	2.6V	1.08V
9	S_MOSI	0V	*0.18V~0.28V	1.08V
10	S_SCLK	0V	2.99V	1.08V

*Black to White

P7901 "Main" to "Inverter Secondary" CN103

Pin	Label	STBY	Run	Diode Check
1	R_VS	0V	0.04V	Open
2	Gnd	Gnd	Gnd	Gnd
3	M2_MOSI	0V	*0.04V~3.2V	1.1V
4	M2_SCLK	0V	0.23V	1.1V
5	Gnd	Gnd	Gnd	Gnd
6	M3_MOSI	0V	0V	1.1V
7	M3_SCLK	0V	0V	1.1V
8	Gnd	Gnd	Gnd	Gnd

*Black to White

Diode Mode values taken with all Connectors Removed

Main Board Connector P8800 to Speakers Voltage and Diode Check

Q8800 (Mute) Active Low.
Normal 3.3V Collector to Pin 25

Use speaker out to test for defective Audio Amp IC8801
Note: (Normal, ½ Audio B+)

P8800 CONNECTOR "Main" to "Speakers"				
Pin	**LABEL**	**SBY**	**Run**	**Diode Check**
1	**SPK-R(-)**	0V	12.3V	Open
2	**SPK-R(+)**	0V	12.3V	Open
3	**SPK-L(-)**	0V	12.3V	Open
4	**SPK-L(+)**	0V	12.3V	Open

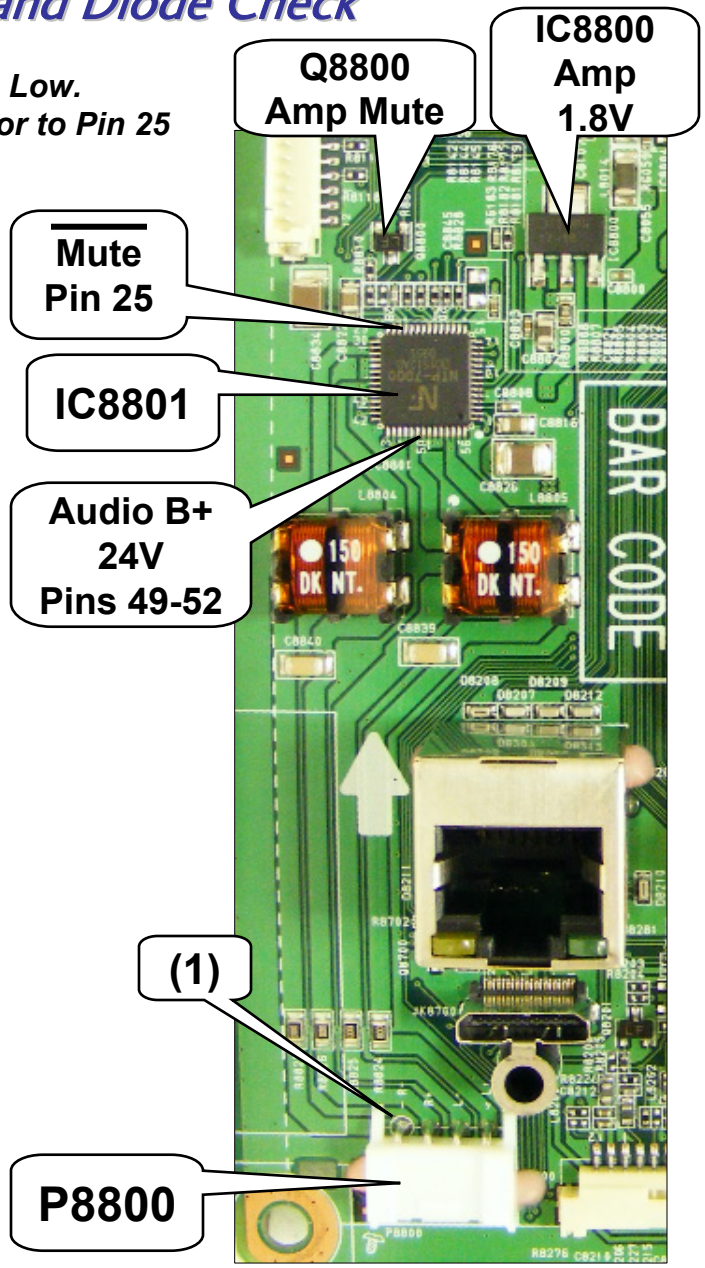

Diode Mode values taken with all Connectors Removed

Main JK8700 Wireless Dongle Jack (Voltage and Diode Check)

JK8700 Jack "MAIN Board" To "Wireless Dungle"

Pin	Label	STBY	Run	Diode Check
1-6	*24V	0V	24V	0.98V
7	Detect	0V	0.3V	0.98V
8	Interrupt	0V	3.3V	1.2V
9	Gnd	0V	Gnd	Gnd
10	n/c	0V	3.3V	1.1V
11	Gnd	0V	Gnd	Gnd
12	I2C_SCL	0V	3.3V	1.02V
13	I2C_SDA	0V	3.3V	1.02V
14	Gnd	0V	Gnd	Gnd
15	Wireless_RX	0V	3.3V	1.17V
16	Wireless_TX	0V	3.3V	1.22V
17	Gnd	0V	Gnd	Gnd
18	IR	0.67V	3.3V	1.37V
19-20	Gnd	0V	Gnd	Gnd

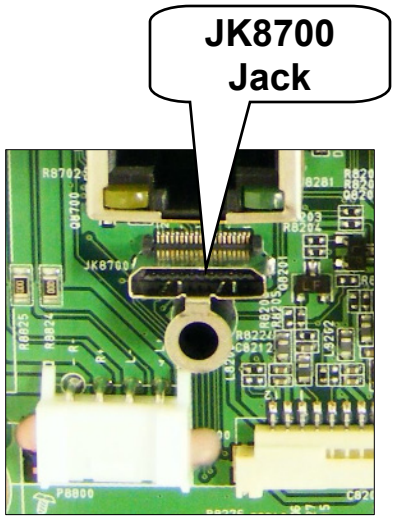

Diode Mode values taken with all Connectors Removed

Voltages with Dongle plugged in.
(Use Dongle side to read voltages. Remove cover).
*24V Switched from Q8701 Drain Back side of the board.
Q8701 turned on by Q8700 front side of the board.
Q8700 turned on by Microprocessor pin 38.

FRONT (IR, INTELLIGENT SENSOR and MOVING LED) SECTION

The Intelligent Sensor and IR board (located on the bottom left as viewed from the rear) contains the IR (Infrared Remote Sensor) and the Intelligent Sensor. This board also connects with the Soft Touch Key Board and the Center LG Logo board. The Center LG Logo lights after power on and the picture appears. Then dims down in about 2 seconds. At power off, it does the reverse.

The IR board receives it operating B+ via CON1 pin 6 (STBY 3.5V).

The IR (Infrared) remote receiver can be measured (1.57V) at pin 9 of connector CON1 or P8200 on the Main board in Stand-By. During run pin 9 reads (1.54V).

The IR pulses (1.6V p/p) CON1 pin 9 are sent to P8200 on the Main board and on to the Microprocessor (IC8101) via pin 16.

The Intelligent Sensor communicates with the Micro/Video Processor IC900 BCM Chip via clock and data lines SCL1 and SDA1 arriving on connector CON1 from P8200 pins 1 and 2 on the Main board.

The Front Power LEDs are controlled by these same Clock and Data lines which communicate with the LED Driver IC U1 on the Soft Touch Key board.

The Key board is routed to the IR board via CON2 and output on CON1 Key 1 and Key 2 lines, (Key 1 pin 4 and Key 2 pin 5). Arriving at P8200 pins 4 and 5 on the Main Board.
Then to the Microprocessor 25 and 26 lines.

Front IR Board (Connections Identified)

p/n EBR64966401

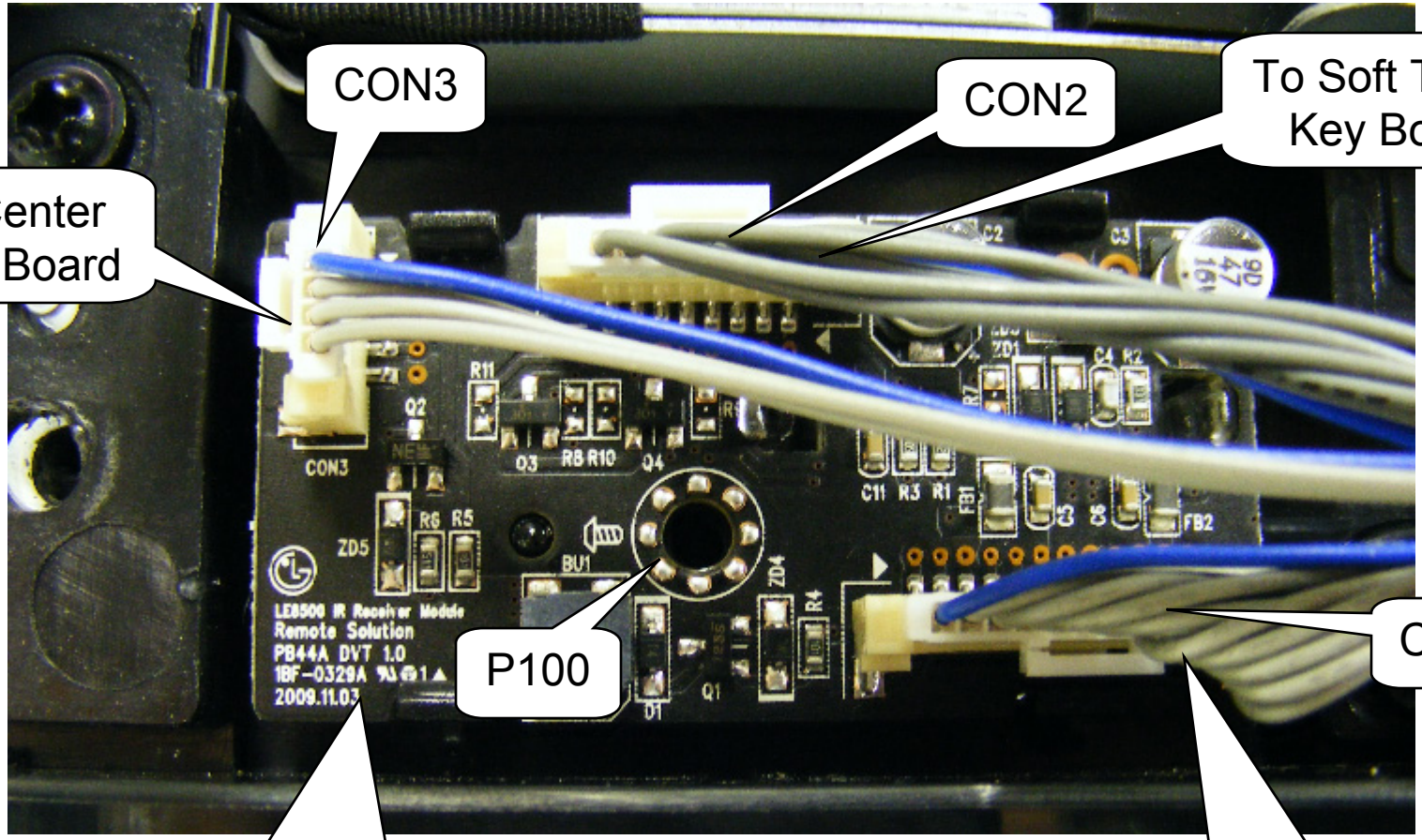

Front Board Connectors CON1, CON2 and CON3 Voltage and Diode Check

CON1 "Front IR" to P8200 " MAIN"

Pin	Label	STBY	Run	Diode Check
1	(1) SCL	3.45V	3.45V	Open
2	(1) SDA	3.45V	3.45V	Open
3	Gnd	Gnd	Gnd	Gnd
4	KEY 1	3.29V	3.29V	Open
5	KEY 2	3.29V	3.29V	Open
6	3.5V_ST	3.45V	3.45V	Open
7	Gnd	Gnd	Gnd	Gnd
8	LED_LOGO	0V	0V	Open
9	(2) IR	1.57V	1.54V	Open
10	Gnd	Gnd	Gnd	Gnd
11	+3.3V_Normal	0V	3.3V	Open
12	LED_R/BUZZ	0V	0V	Open

(1) Clock pulses only present when Intelligent Sensor is turned on. (3.7V p/p)
(2) IR pulses (1.6V p/p)

Diode Mode values taken with all Connectors Removed

CON2 "Front IR" to "Soft Touch Key Board"

Pin	STBY	Run	Diode Check
1	3.45V	3.36V	Open
2	0V	1.63V	Open
3	Gnd	Gnd	Gnd
4	3.3V	3.3V	Open
5	3.28V	3.28V	Open
6	Gnd	Gnd	Gnd
7	3.45V	3.36V	Open
8	3.45V	3.36V	Open

CON3 "Front IR" to "LG Logo Board"

Pin	STBY	Run	Diode Check
1	3.45V	3V	1.5
2	Gnd	Gnd	Gnd
3	1.36V	0.6V	0
4	Gnd	Gnd	Gnd

INVISIBLE SPEAKER SECTION

Speaker
p/n EAB60961501

The 47LE8500 contains the Invisible Speaker system.
The Full Range Speakers point downward, so there is no front viewable speaker grill or air ports.

Installed

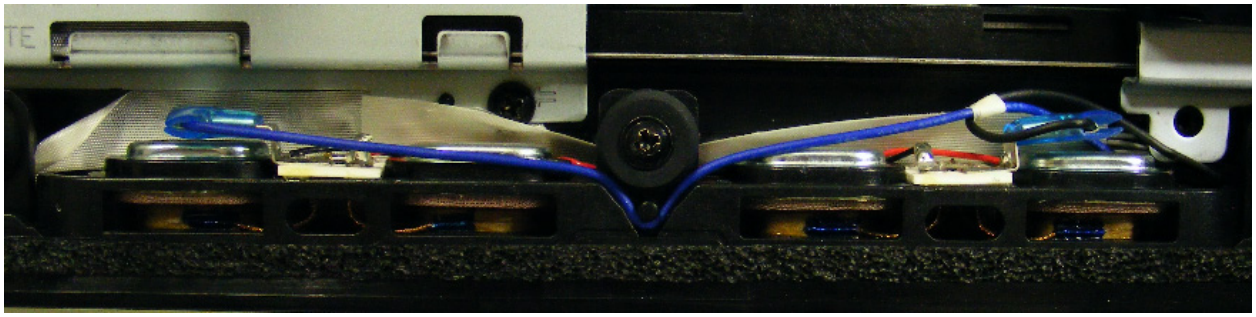

Top View

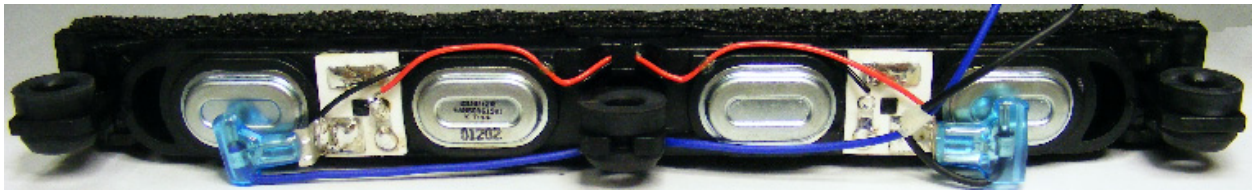

Side View

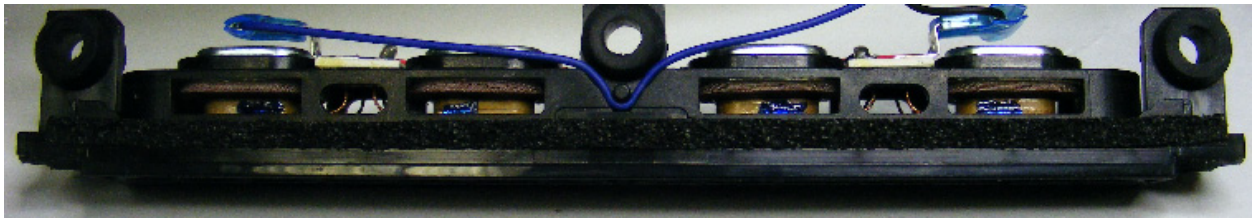

Front View

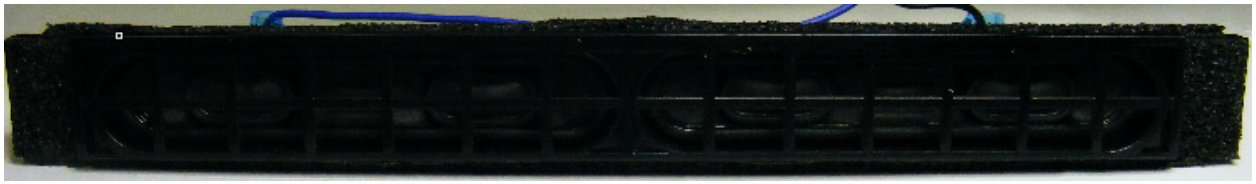

INTERCONNECT DIAGRAM (11 X 17 FOLDOUT SECTION)

This section shows the 11X17 foldout that's available in the Paper and Adobe version of the Training Manual.

The Adobe version of this Training Manual allows the viewer to zoom in and out making reading of the small text easier.
This Power Point shows a graphical representation of the 11 X 17 foldout page so clarity is limited.

47LE8500 INTERCONNECT DIAGRAM

P204 "SMPS" To CN1 "INVERTER Main"

Pin	Label	STBY	Run	Diode
1-5	24V	0V	24.6V	0.424V
6-10	GND	GND	GND	GND
11	(1) P-DIM	0V	0.37V~3.3V	Open
12	(2) I-C	0V	2.92V	Open
13	n/c	n/c	n/c	Open
14	ERROR	0V	0V	Open

P205 "SMPS" To CN201 "INVERTER Secondary"

Pin	Label	STBY	Run	Diode
1-5	24V	0V	24.6V	0.424V
6-10	GND	GND	GND	GND
11	(1) P-DIM	0V	0.37V~3.3V	Open
12	(2) I-C	0V	2.92V	Open

(2) I-C is Inverter On (INV_ON)

Note: If a particular block is exhibiting a dimmer level that the other or the overall brightness seems dim, be sure to first check the customer's Menu setting for Backlights. Raise the percentage and see if the overall brightness returns to normal. If not,
1st: Check the P-DIM level, it should rise with the percentage shown on screen. 100%, 3.3V. Follow the P-DIM signal all the way to each Inverter.
2nd: Turn off the set and unplug the connector to the Inverters coming from the Main board. If the brightness returns to normal, the Main board is defective.

Drive Signals to LED Blocks

Each connector (27 total) to the LED Blocks (216) have two pins delivering B+ 13V and 8 Drive Signals

To force a Block to turn on, simple ground the pin providing the 13V source is present.

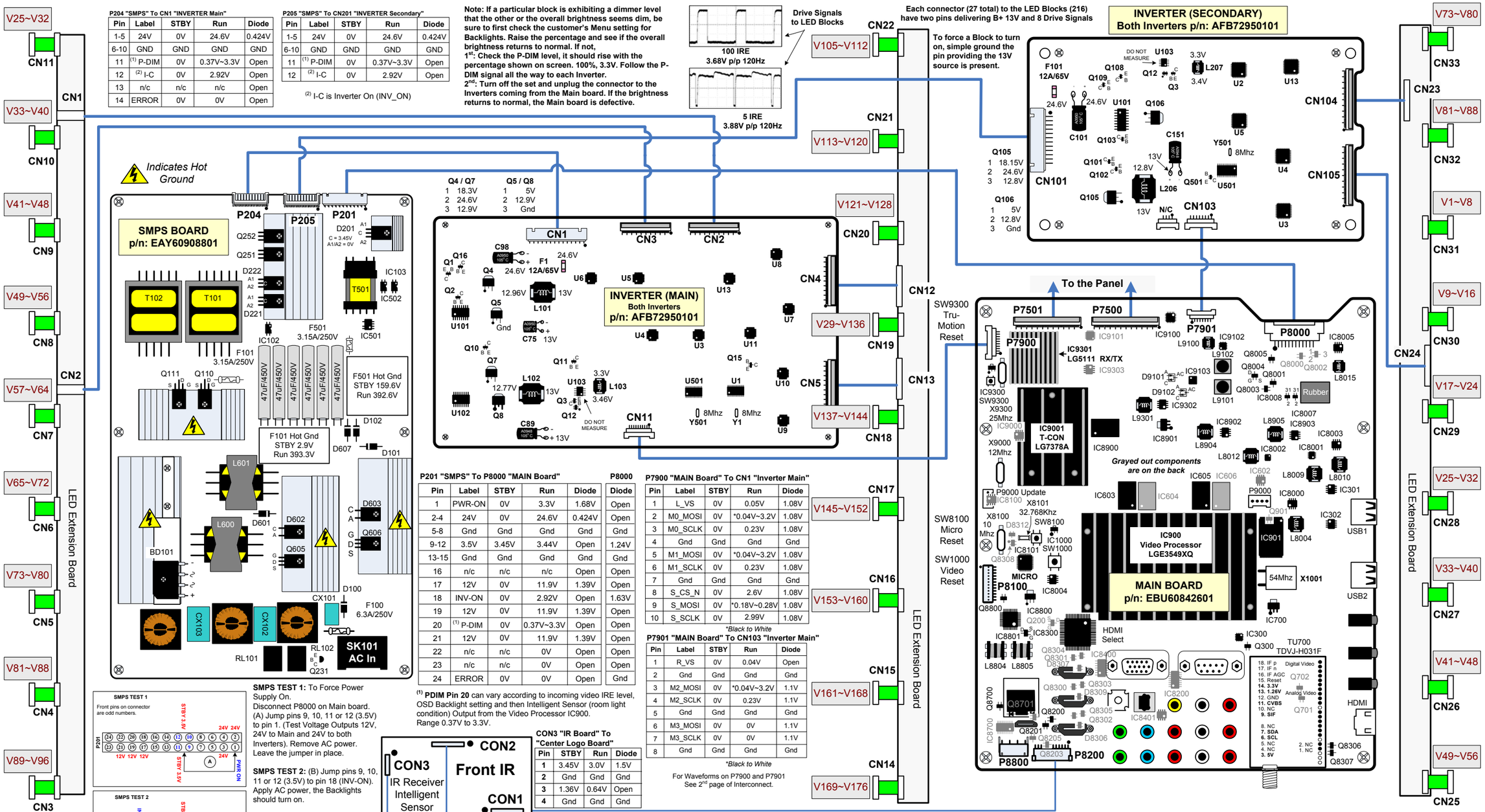

P201 "SMPS" To P8000 "MAIN Board"

Pin	Label	STBY	Run	Diode
1	PWR-ON	0V	3.3V	1.68V
2-4	24V	0V	24.6V	0.424V
5-8	Gnd	Gnd	Gnd	Gnd
9-12	3.5V	3.45V	3.44V	Open
13-15	Gnd	Gnd	Gnd	Gnd
16	n/c	n/c	n/c	Open
17	12V	0V	11.9V	1.39V
18	INV-ON	0V	2.92V	Open
19	12V	0V	11.9V	1.39V
20	(1) P-DIM	0V	0.37V~3.3V	Open
21	12V	0V	11.9V	1.39V
22	n/c	n/c	0V	Open
23	n/c	n/c	0V	Open
24	ERROR	0V	0V	Open

P8000

Diode
Open
Open
Gnd
1.24V
Gnd
Open
Open
1.63V
Open
Open
Open
Open
Gnd

(1) **PDIM Pin 20** can vary according to incoming video IRE level, OSD Backlight setting and then Intelligent Sensor (room light condition) Output from the Video Processor IC900. Range 0.37V to 3.3V.

P7900 "MAIN Board" To CN1 "Inverter Main"

Pin	Label	STBY	Run	Diode
1	L_VS	0V	0.05V	1.08V
2	M0_MOSI	0V	*0.04V~3.2V	1.08V
3	M0_SCLK	0V	0.23V	1.08V
4	Gnd	Gnd	Gnd	Gnd
5	M1_MOSI	0V	*0.04V~3.2V	1.08V
6	M1_SCLK	0V	0.23V	1.08V
7	Gnd	Gnd	Gnd	Gnd
8	S_CS_N	0V	2.6V	1.08V
9	S_MOSI	0V	*0.18V~0.28V	1.08V
10	S_SCLK	0V	2.99V	1.08V

*Black to White

P7901 "MAIN Board" To CN103 "Inverter Main"

Pin	Label	STBY	Run	Diode
1	R_VS	0V	0.04V	Open
2	Gnd	Gnd	Gnd	Gnd
3	M2_MOSI	0V	*0.04V~3.2V	1.1V
4	M2_SCLK	0V	0.23V	1.1V
5	Gnd	Gnd	Gnd	Gnd
6	M3_MOSI	0V	0V	1.1V
7	M3_SCLK	0V	0V	1.1V
8	Gnd	Gnd	Gnd	Gnd

*Black to White

For Waveforms on P7900 and P7901 See 2nd page of Interconnect.

CON3 "IR Board" To "Center Logo Board"

Pin	STBY	Run	Diode
1	3.45V	3.0V	1.5V
2	Gnd	Gnd	Gnd
3	1.36V	0.64V	Open
4	Gnd	Gnd	Gnd

CON2 "IR Board" To "Soft Touch Key Board"

Pin	STBY	Run	Diode	Pin	STBY	Run	Diode
1	3.45V	3.36V	Open	5	3.28V	3.28V	Open
2	0V	1.63V	Open	6	Gnd	Gnd	Gnd
3	Gnd	Gnd	Gnd	7	3.45V	3.36V	Open
4	3.3V	3.3V	Open	8	3.45V	3.36V	Open

P8800 "Main" To "Speakers"

Pin	Label	SBY	Run	Diode
1	SPK-R(-)	0V	12.3V	Open
2	SPK-R(+)	0V	12.3V	Open
3	SPK-L(-)	0V	12.3V	Open
4	SPK-L(+)	0V	12.3V	Open

P8200 "MAIN Board" To CON1 "IR Board"

	Pin	Label	STBY	Run	Diode Check
Intelligent Sensor	1	SCL	3.45V	3.45V	Open
Intelligent Sensor	2	SDA	3.45V	3.45V	Open
	3	Gnd	Gnd	Gnd	Gnd
	4	Key1	3.29V	3.29V	1.9V
	5	Key2	3.29V	3.29V	1.9V
Stand-by	6	3.5V_ST	3.45V	3.45V	1.24V

Pin	Label	STBY	Run	Diode Check
7	Gnd	Gnd	Gnd	Gnd
8	LED_LOGO	0V	0V	Open
9	IR	1.57V	1.54V	Open
10	Gnd	Gnd	Gnd	Gnd
11	3.3V_Normal	0V	3.3V	0.59V
12	LED_BUZZ	0V	0V	Open

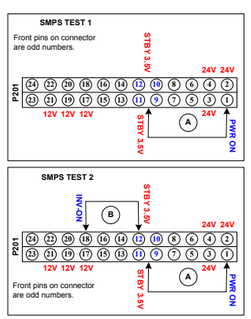

SMPS TEST 1: To Force Power Supply On.
Disconnect P8000 on Main board. (A) Jump pins 9, 10, 11 or 12 (3.5V) to pin 1. (Test Voltage Outputs 12V, 24V to Main and 24V to both Inverters). Remove AC power. Leave the jumper in place.

SMPS TEST 2: (B) Jump pins 9, 10, 11 or 12 (3.5V) to pin 18 (INV-ON). Apply AC power, the Backlights should turn on.

Note; If Inverter Main or Secondary is loading down 24V, each Inverter can be run separately:
Remove AC and Disconnect P204. When AC is reapplied, the Backlight LEDs on the Right (Back View) should turn on.
Remove AC and Disconnect P205 and reinstall P204. When AC is reapplied, the Backlight LEDs on the Left (Back View) should turn on.

42LE8500 Inverter Main and Secondary Local Dimming Control Signals Waveforms

CN11 INVERTER (MAIN) FROM P7900 MAIN BOARD

Inverter Main CN11 pin 01 Black or White Screen

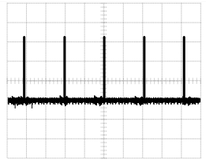

1V per/div	4MSes	3.66V p/p

Inverter Main CN11 pin 02 Black Screen

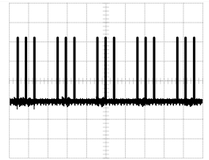

1V per/div	4MSes	3.70V p/p

Inverter Main CN11 pin 02 White Screen

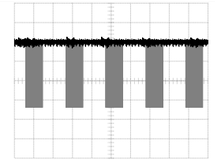

1V per/div	4MSes	4.22V p/p

Inverter Main CN11 pin 03 Black Screen

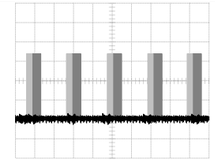

1V per/div	4MSes	3.70V p/p

Inverter Main CN11 pin 03 White Screen

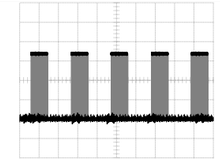

1V per/div	4MSes	3.96V p/p

Inverter Main CN11 pin 05 Black Screen

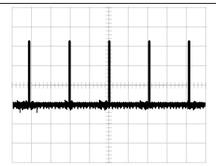

1V per/div	4MSes	3.66V p/p

Inverter Main CN11 pin 05 White Screen

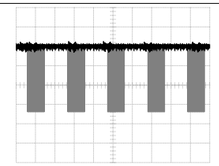

1V per/div	4MSes	3.98V p/p

Inverter Main CN11 pin 06 Black or White Screen

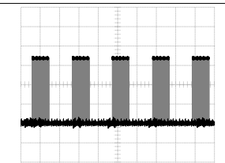

1V per/div	4MSes	3.98V p/p

Inverter Main CN11 pin 08 Black or White Screen

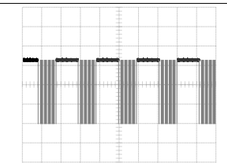

1V per/div	4MSes	3.76V p/p

Inverter Main CN11 pin 09 Black Screen

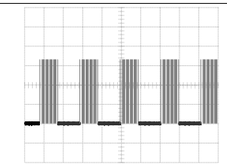

1V per/div	4MSes	3.66V p/p

Inverter Main CN11 pin 09 White Screen

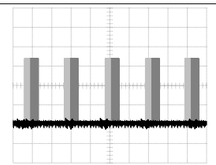

1V per/div	4MSes	3.88V p/p

Inverter Main CN11 pin 11 Black Screen

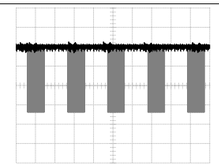

1V per/div	4MSes	3.88V p/p

Inverter Main CN11 pin 11 White Screen

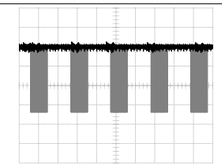

1V per/div	4MSes	3.68V p/p

CN103 INVERTER (SECONDARY) FROM P7901 MAIN BOARD

Inverter Secondary CN103 pin 01 Black or White Screen

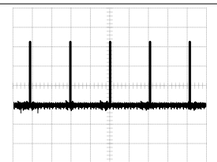

1V per/div	4MSes	3.52V p/p

Inverter Secondary CN103 pin 02 Black Screen

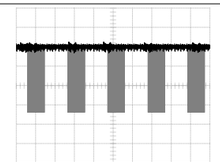

1V per/div	4MSes	3.56V p/p

Inverter Secondary CN103 pin 03 White Screen

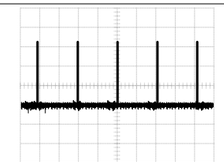

1V per/div	4MSes	3.56V p/p

Inverter Secondary CN103 pin 04 Black or White Screen

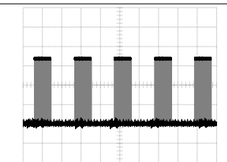

1V per/div	4MSes	3.62V p/p

47LE8500 MAIN (FRONT SIDE) SIMICONDUCTORS

IC700 (+1.26V_TU) Regulator

Pin	
[1]	0V (Gnd)
[2]	1.26V (Out)
[3]	3.3V (In)

IC1000 SOC Reset Generator

Pin	
[1]	3.32V (In)
[2]	0V (Gnd)
[3]	3.3V (Out)

IC8000 5V Regulator for USB

Pin	
[1]	11.79V (In)
[2]	5V (Out)
[3]	5V (Out)
[4]	10.5V
[5]	3.3V
[6]	0.8V
[7]	4.99V
[8]	0V (Gnd)

IC8001 D1.2V and A1.2V Regulator

Pin	
[1]	0V (Gnd)
[2]	3.3V
[3]	0V (Gnd)
[4]	1.2V
[5]	3.3V
[6]	n/c
[7]	4.46V
[8]	3.3V
[9]	3.3V
[10]	3.3V
[11]	1.2V
[12]	Gnd
[13]	3.3V
[14]	0.8V

IC8002 (D1.8V) Regulator

Pin	
[1]	5V
[2]	3.34V (In)
[3]	1.8V (Out)
[4]	Gnd
[5]	Gnd
[6]	0.9V
[7]	0.9V
[8]	1V
[9]	2.38V
[10]	3.36V (PWR On/Off1 Ctl)

IC8003 (+5V_NORMAL) Regulator

Pin	
[1]	0V (Gnd)
[2]	11.8V (In)
[3]	0V (Gnd)
[4]	0.8V
[5]	0.86V
[6]	3.37V (PWR On/Off2 Ctl)
[7]	5V (In)
[8]	5V (In)

IC8004 A2.5V Regulator for USB

Pin	
[1]	n/c
[2]	3.26V (In)
[3]	3.26V (In)
[4]	n/c
[5]	n/c
[6]	2.55V (Out)
[7]	0.8V
[8]	0V (Gnd)

IC8005 (+3.3V_NORMAL) Regulator

Pin	
[1]	0V (Gnd)
[2]	11.8V (In)
[3]	0V (Gnd)
[4]	0.8V
[5]	0.86V
[6]	3.36V (PWR On/Off2 (
[7]	3.36V (Out)
[8]	3.36V (Out)

IC8007 Power Det Gen (+12V and +3.5V)

Pin	
[1]	0V (Gnd)
[2]	3.6V (In)
[3]	3.5V (Out)

IC8008 Power Det Gen (+24V)

Pin	
[1]	0V (Gnd)
[2]	3.6V (In)
[3]	3.7V (Out)

IC8800 (+1.8V_AMP) Regulator

Pin	
[1]	0V (Gnd)
[2]	1.8V (Out)
[3]	3.295V (In)

IC8901 (+1.5V_MEMC) Regulator

Pin	
[1]	0V (Gnd)
[2]	1.5V (Out)
[3]	3.3V (In)

IC8902 (+1.26V_MEMC) Regulator

Pin	
[1]	0V (Gnd)
[2]	11.8V (In)
[3]	0V (Gnd)
[4]	0.8V
[5]	0.7V
[6]	3.36V (PWR On/Off2
[7]	1.3V (Out)
[8]	1.3V (Out)

IC8903 (+3.3V_MEMC) Regulator

Pin	
[1]	0V (Gnd)
[2]	11.8V (In)
[3]	0V (Gnd)
[4]	0.8V
[5]	0.8V
[6]	3.36V (PWR On/Off2 Ctl)
[7]	3.3V (Out)
[8]	3.3V (Out)

IC9100 P-GAMMA Chip

Pin	
[1]	3.3V
[2]	0V (Gnd)
[3]	3.3V (In)
[4]	0V (Gnd)
[5]	6.8V
[6]	6.8V
[7]	15.3V
[8]	15.3V
[9]	n/c
[10]	13.47V
[11]	12.75V
[12]	11.8V
[13]	10V
[14]	5.96V
[15]	4.06V
[16]	15.3V
[17]	0V
[18]	2.96V
[19]	2.33V
[20]	3.3V (In)

IC9102 DC to DC HVDD T-CON

Pin	
[1]	0V (Gnd)
[2]	11.72V (In)
[3]	11.72V (In)
[4]	3.25V
[5]	3.2V
[6]	0V
[7]	0V
[8]	11.7V
[9]	0V (Gnd)
[10]	1.13V
[11]	0V (Gnd)
[12]	0V (Gnd)
[13]	0V (Gnd)
[14]	7.7V
[15]	7.7V (HVDD)
[16]	0V (Gnd)

IC9300 Reset for LG5111

Pin	
[1]	3.32V (In)
[2]	0V (Gnd)
[3]	3.34V (Out)

IC9302 (1.8V_L/Dimming) Regulator

Pin	
[1]	0V (Gnd)
[2]	11.8V (In)
[3]	0V (Gnd)
[4]	0.8V
[5]	0.76V
[6]	3.34V (PWR On/Off2 Ctl)
[7]	1.8V (In)
[8]	1.8V (In)

Q8001 PANEL_VCC Control 1st Driver

Pin	
B	0V
C	0.68V
E	Gnd

Q8003 PANEL_VCC Control 2nd Driver

Pin	
B	0.679V
C	0V
E	Gnd

Q8004 PANEL_VCC Switch

Pin	
S	11.8V (In)
G	1.8V (Enable)
D	11.8V (Out)

Q8005 INV_ON Driver

Pin	
B	0V (INV ON) En
C	3.1V (Out)
E	Gnd

Q8200 IR Buffer 2nd

Pin	
B	
C	
E	Gnd

Q8201 IR Buffer 1st

Pin	
B	0V
C	3.3V
E	Gnd

Q8306 HDMI Det

Pin	
B	0V
C	3.3V
E	Gnd

Q8307 HDMI Det

Pin	
B	0V
C	4.18V
E	Gnd

Q8800 AMP_MUTE Pin 25 IC8801

Pin	
B	0V
C	3.336V
E	Gnd

D9101 VGH/VDD Rectifyer

Pin	
A	15.4V
AC	22.2V
C	27.4V (VGH)

D9102 VGL/VCC Rectifyer

Pin	
A	(-5V VGL)
AC	(-1.9V)
C	0V

47LE8500 MAIN (BACK SIDE) SIMICONDUCTORS

IC602 D1.8V Regulator

Pin	
[1]	0V (Gnd)
[2]	3.29V (PWR On/Off1 Ctl)
[3]	0.9V (DDR_VTT)
[4]	0.93V
[5]	1.83V
[6]	3.38V (In)
[7]	1.8V (Out)
[8]	0.91V (DDR_VTT)

IC8100 EEPROM Micro

Pin	
[1]	0V (Gnd)
[2]	0V (Gnd)
[3]	0V (Gnd)
[4]	0V (Gnd)
[5]	3.37V
[6]	3.37V
[7]	0V (Gnd)
[8]	3.37V

IC8200 RS232 Routing

Pin	
[1]	0V
[2]	0V
[3]	0V
[4]	0V
[5]	0V
[6]	(-5.47V)
[7]	n/c (5.59V)
[8]	n/c (0V)
[9]	n/c (3.3V)
[10]	n/c (0.2V)
[11]	n/c (3.3V)
[12]	3.35V
[13]	0V
[14]	(-5.47V)
[15]	0V (Gnd)
[16]	3.37V

IC8400 RGB H/V Sync

Pin	
[1]	1.9V
[2]	1.9V
[3]	4.4V
[4]	0V
[5]	0.9V
[6]	n/c (4.5V)
[7]	0V (Gnd)
[8]	n/c (4.5V)
[9]	n/c (1.9V)
[10]	n/c (1.9V)
[11]	n/c (4.5V)
[12]	0.9V
[13]	0.9V
[14]	5V

IC8401 EDID Data PC

Pin	
[1]	0V (Gnd)
[2]	0V (Gnd)
[3]	0V (Gnd)
[4]	0V (Gnd)
[5]	0.7V
[6]	4.1V
[7]	4.5V
[8]	4.5V (In)

IC9000 Serial Flash T-CON

Pin	
[1]	0.06V
[2]	0.67V
[3]	3.3V (In)
[4]	0V (Gnd)
[5]	0V
[6]	0.34V
[7]	3.31V (In)
[8]	3.34V (In)

IC9303 EEPROM for LG5111

Pin	
[1]	0V (Gnd)
[2]	0V (Gnd)
[3]	0V (Gnd)
[4]	0V (Gnd)
[5]	3.37V
[6]	3.37V
[7]	3.34V
[8]	3.37V (In)

Q200 (1.8V_HDMI) Switch

Pin	
S	1.83V (Out)
G	3.35V (PWR On/Off2 Ctl)
D	1.83V (In)

Q701 Tuner SIF (Sound) Buffer

Pin	
B	0.16V
C	Gnd
E	0.83V

Q702 Tuner Video (Analog) Buffer

Pin	
B	2.05V
C	2.75V
E	Gnd

Q901 FLASH_WP for IC901

Pin	
B	0V (Flash_WP)
C	3.36V
E	Gnd

Q8000 RL_ON (PWR_On) 1st Driver

Pin	
B	0.66V
C	0V
E	Gnd

Q8002 PWR_ON Switch

Pin	
[1]	3.36V (In)
[2]	0V
[3]	3.3V (Out)

Q8300, 2 HDMI 2 Det

Pin	
B	4.2V
C	0V
E	Gnd

Q8303, 4, 5 HDMI 3 Det

Pin	
B	0V
C	4.2V
E	Gnd

Q8308 CEC Remote HDMI CEC

Pin	
[B]	2.72V
[G]	2.73V
[S]	3.27V
[D]	3.37V

D8312 3.5V Pull Up HDMI CEC

Pin	
A1	0V
C	3.26V
A2	3.2V

D8306, 7, 9 5V Pull Up Routing HDMI SCL/SDA

Pin	
A1	5.04V
C	4.58V
A2	0V

47LE8500 Conclusion Page

LG TRAINING CENTER

Direct View LCD

This concludes the 47LE8500 training session.

LG
Life's Good