Compal Confidential

KAV60 Schematics Document

Intel Diamondville Processor with Calistoga(945GSE) + DDRII + ICH7M

2009-02-22

REV: 1.0

deddy.suyanto@gmail.com

Security Classification	Compal Secret Data		
Issued Date	2006/08/18	Deciphered Date	2007/8/18

THIS SHEET OF ENGINEERING DRAWING IS THE PROPRIETARY PROPERTY OF COMPAL ELECTRONICS, INC. AND CONTAINS CONFIDENTIAL AND TRADE SECRET INFORMATION. THIS SHEET MAY NOT BE TRANSFERED FROM THE CUSTODY OF THE COMPETENT DIVISION OF R&D DEPARTMENT EXCEPT AS AUTHORIZED BY COMPAL ELECTRONICS, INC. NEITHER THIS SHEET NOR THE INFORMATION IT CONTAINS MAY BE USED BY OR DISCLOSED TO ANY THIRD PARTY WITHOUT PRIOR WRITTEN CONSENT OF COMPAL ELECTRONICS, INC.

Compal Electronics, Inc.

Title	Cover Page	
Size B	Document Number KAV60 LA-5141P	Rev 0.2
Date: Sunday, February 22, 2009	Sheet 1 of 40	

Compal Confidential

Model Name : KAV60
File Name : LA-5141P
P/N : DA60000BO00

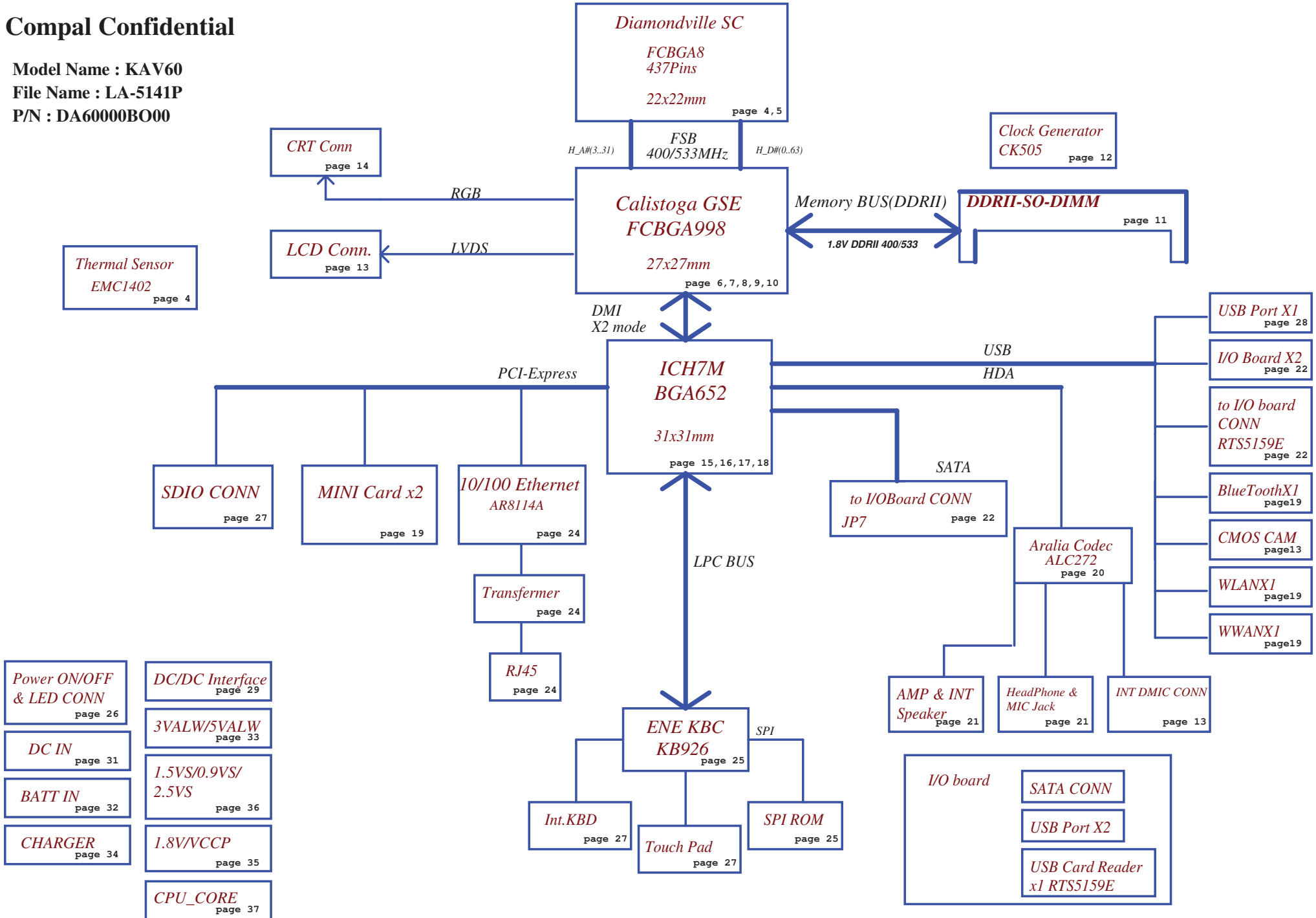

Security Classification	Compal Secret Data		
Issued Date	2006/08/18	Deciphered Date	2007/8/18

THIS SHEET OF ENGINEERING DRAWING IS THE PROPRIETARY PROPERTY OF COMPAL ELECTRONICS, INC. AND CONTAINS CONFIDENTIAL AND TRADE SECRET INFORMATION. THIS SHEET MAY NOT BE TRANSFERED FROM THE CUSTODY OF THE COMPETENT DIVISION OF R&D DEPARTMENT EXCEPT AS AUTHORIZED BY COMPAL ELECTRONICS, INC. NEITHER THIS SHEET NOR THE INFORMATION IT CONTAINS MAY BE USED BY OR DISCLOSED TO ANY THIRD PARTY WITHOUT PRIOR WRITTEN CONSENT OF COMPAL ELECTRONICS, INC.

Compal Electronics, Inc.

Title: Block Diagrams

Size: B | Document Number: KAV60 LA-5141P | Rev: 0.2

Date: Thursday, January 22, 2009 | Sheet 2 of 40

deddy.suyanto@gmail.com

Voltage Rails

Power Plane	Description	S1	S3	S5
VIN	Adapter power supply (19V)	N/A	N/A	N/A
B+	AC or battery power rail for power circuit.	N/A	N/A	N/A
+CPU_CORE	Core voltage for CPU	ON	OFF	OFF
+0.9VS	0.9V switched power rail for DDR terminator	ON	OFF	OFF
+VCCP	VCCP switched power rail	ON	OFF	OFF
+1.5VS	1.5V switched power rail	ON	OFF	OFF
+1.8V	1.8V power rail for DDR	ON	ON	OFF
+2.5VS	2.5V switched power rail	ON	OFF	OFF
+3VALW	3.3V always on power rail	ON	ON	ON*
+3VS	3.3V switched power rail	ON	OFF	OFF
+5VALW	5V always on power rail	ON	ON	ON*
+5VS	5V switched power rail	ON	OFF	OFF
+VSB	VSB always on power rail	ON	ON	ON*
+RTCVCC	RTC power	ON	ON	ON

Note : ON* means that this power plane is ON only with AC power available, otherwise it is OFF.

STATE \ SIGNAL	SLP_S3#	SLP_S4#	SLP_S5#	+VALW	+V	+VS	Clock
Full ON	HIGH	HIGH	HIGH	ON	ON	ON	ON
S1(Power On Suspend)	HIGH	HIGH	HIGH	ON	ON	ON	LOW
S3 (Suspend to RAM)	LOW	HIGH	HIGH	ON	ON	OFF	OFF
S4 (Suspend to Disk)	LOW	LOW	HIGH	ON	OFF	OFF	OFF
S5 (Soft OFF)	LOW	LOW	LOW	ON	OFF	OFF	OFF

BOARD ID Table(Page 25)

ID	BRD ID	Ra	Rb	Vab
0	R01 (EVT)	NC	0	0V
1	R02 (DVT)	100K	8.2K	0.25V
2	R03 (PVT)	100K	18K	0.50V
3	R10A (MP)	100K	NC	3.3V

External PCI Devices

DEVICE	IDSEL #	REQ/GNT #	PIRQ

No PCI Device

EC SM Bus1 address

Device	Address
Smart Battery	0001 011X b
EEPROM(24C16/02)	1010 000X b

EC SM Bus2 address

Device	Address
EMC1402	1001 100X b

ICH7M SM Bus address

Device	Address
Clock Generator (SLG8SP556VTR)	1101 001Xb
DDR DIMMA	1010 000Xb

deddy.suyanto@gmail.com

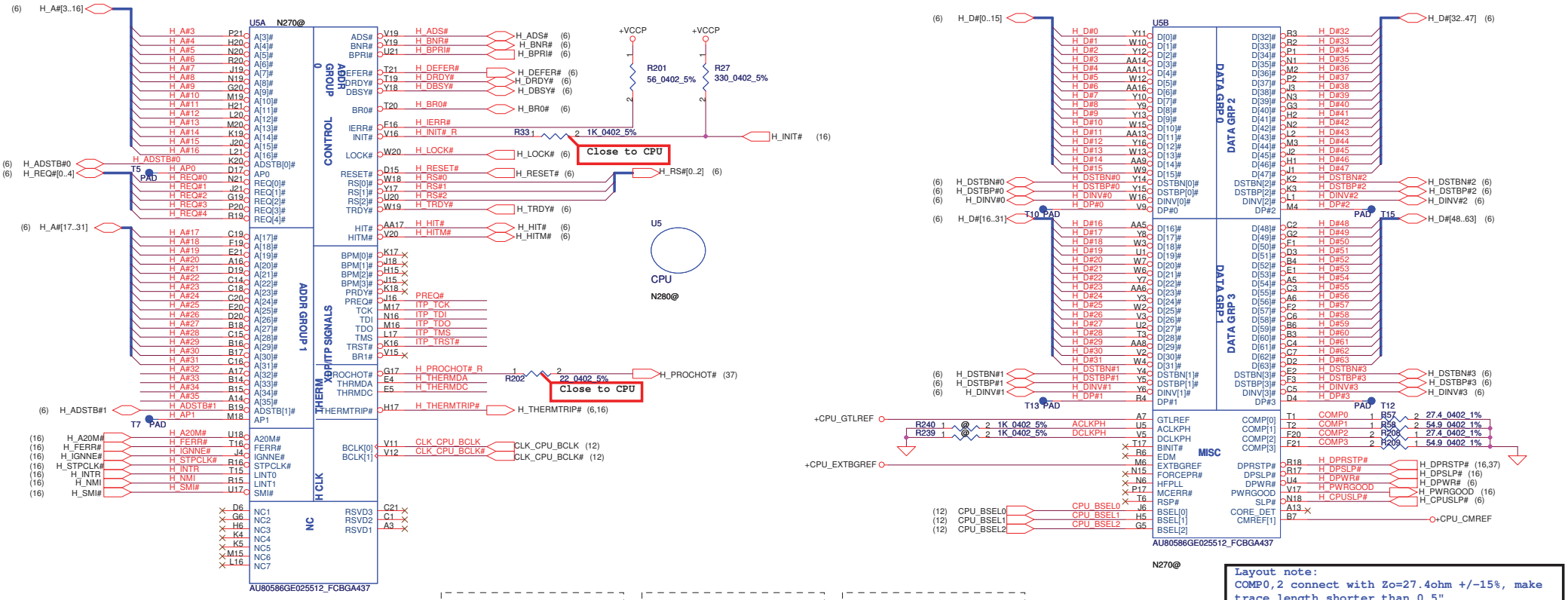

Layout note:
COMP0,2 connect with Zo=27.4ohm +/-15%, make trace length shorter than 0.5"
COMP1,3 connect with Zo=55ohm +/-15%, make trace length shorter than0.5"

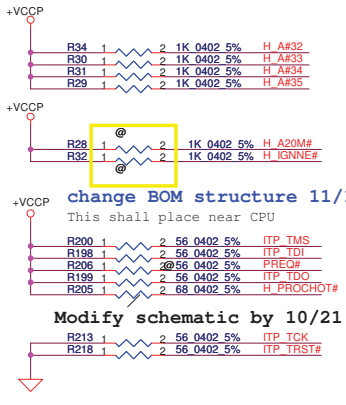

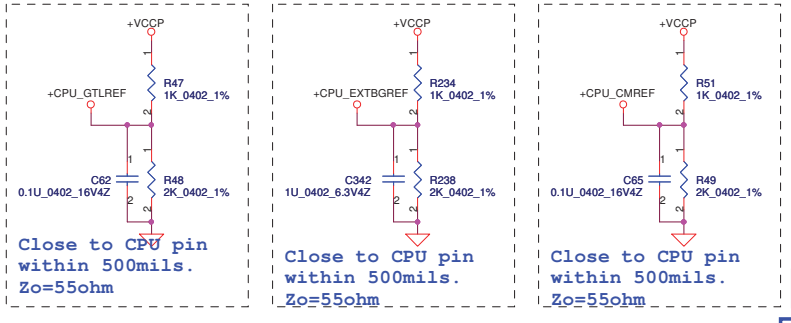

H_THERMDA, H_THERMDC routing together.
Trace width / Spacing = 10 / 10 mil

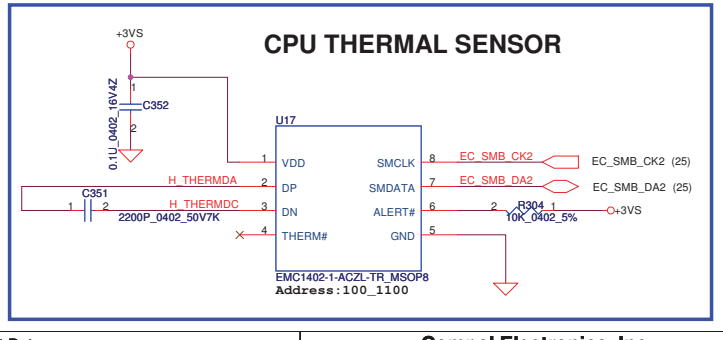

Security Classification	Compal Secret Data		
Issued Date	2006/08/18	Deciphered Date	2007/8/18

THIS SHEET OF ENGINEERING DRAWING IS THE PROPRIETARY PROPERTY OF COMPAL ELECTRONICS, INC. AND CONTAINS CONFIDENTIAL AND TRADE SECRET INFORMATION. THIS SHEET MAY NOT BE TRANSFERED FROM THE CUSTODY OF THE COMPETENT DIVISION OF R&D DEPARTMENT EXCEPT AS AUTHORIZED BY COMPAL ELECTRONICS, INC. NEITHER THIS SHEET NOR THE INFORMATION IT CONTAINS MAY BE USED BY OR DISCLOSED TO ANY THIRD PARTY WITHOUT PRIOR WRITTEN CONSENT OF COMPAL ELECTRONICS, INC.

Compal Electronics, Inc.

Title: Diamondville(1/2)

Size: Custom | Document Number: KAV60 LA-5141P | Rev: 0.2

Date: Sunday, February 22, 2009 | Sheet 4 of 40

deddy.suyanto@gmail.com

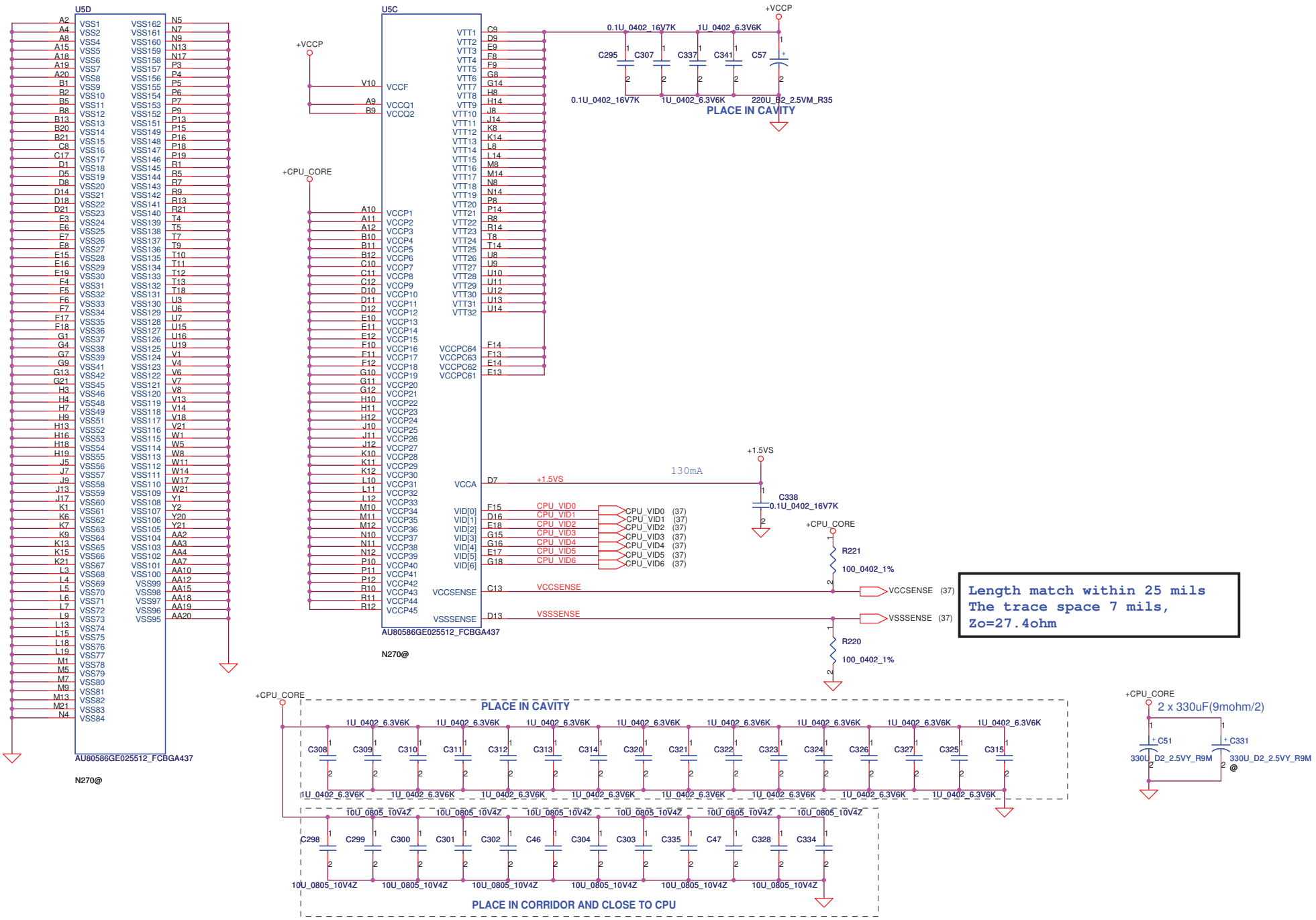

Security Classification	Compal Secret Data		
Issued Date	2006/08/18	Deciphered Date	2007/8/18

THIS SHEET OF ENGINEERING DRAWING IS THE PROPRIETARY PROPERTY OF COMPAL ELECTRONICS, INC. AND CONTAINS CONFIDENTIAL AND TRADE SECRET INFORMATION. THIS SHEET MAY NOT BE TRANSFERED FROM THE CUSTODY OF THE COMPETENT DIVISION OF R&D DEPARTMENT EXCEPT AS AUTHORIZED BY COMPAL ELECTRONICS, INC. NEITHER THIS SHEET NOR THE INFORMATION IT CONTAINS MAY BE USED BY OR DISCLOSED TO ANY THIRD PARTY WITHOUT PRIOR WRITTEN CONSENT OF COMPAL ELECTRONICS, INC.

Compal Electronics, Inc.

Title: Diamondville(2/2)

Size: B | Document Number: KAV60 LA-5141P | Rev: 0.2

Date: Sunday, February 22, 2009 | Sheet 5 of 40

deddy.suyanto@gmail.com

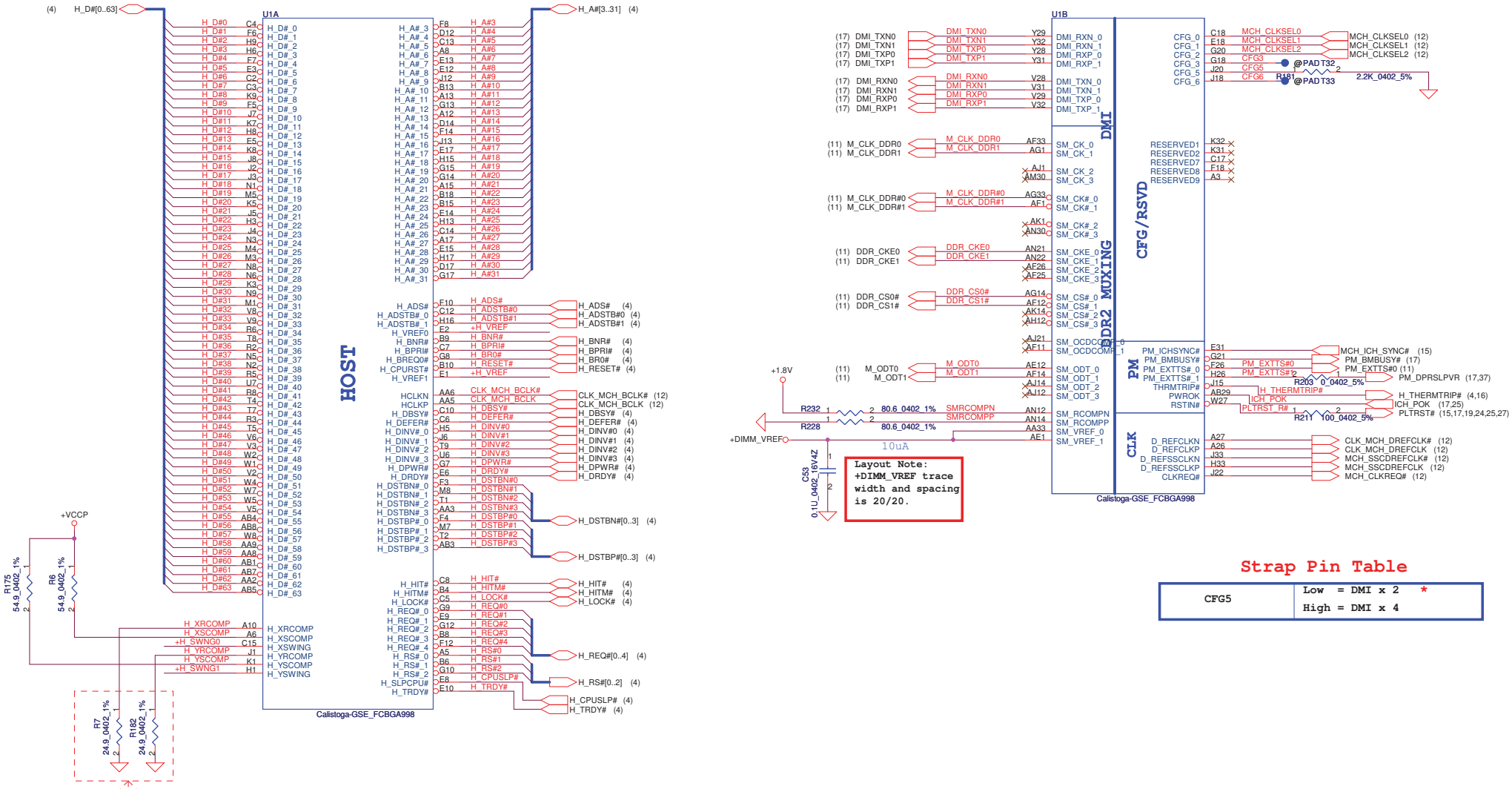

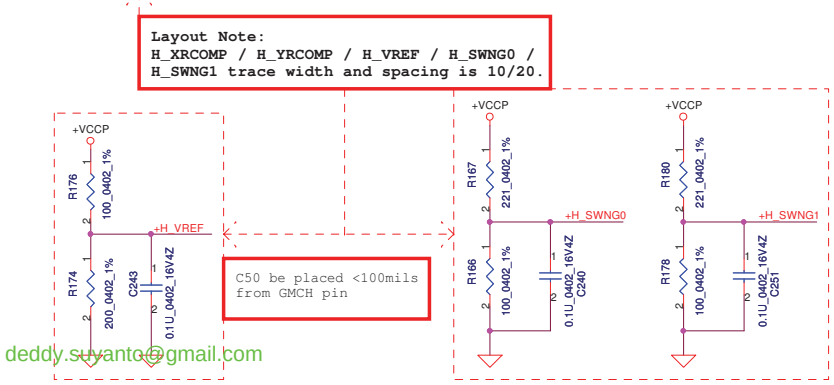

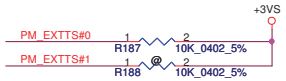

Security Classification	Compal Secret Data		
Issued Date	2006/08/18	Deciphered Date	2007/8/18

THIS SHEET OF ENGINEERING DRAWING IS THE PROPRIETARY PROPERTY OF COMPAL ELECTRONICS, INC. AND CONTAINS CONFIDENTIAL AND TRADE SECRET INFORMATION. THIS SHEET MAY NOT BE TRANSFERED FROM THE CUSTODY OF THE COMPETENT DIVISION OF R&D DEPARTMENT EXCEPT AS AUTHORIZED BY COMPAL ELECTRONICS, INC. NEITHER THIS SHEET NOR THE INFORMATION IT CONTAINS MAY BE USED BY OR DISCLOSED TO ANY THIRD PARTY WITHOUT PRIOR WRITTEN CONSENT OF COMPAL ELECTRONICS, INC.

Compal Electronics, Inc.

Title: Calistoga(1/5)-GTL/DMI/DDR

Size: Custom | Document Number: KAV60 LA-5141P | Rev: 0.2

Date: Sunday, February 22, 2009 | Sheet 6 of 40

deddy.suyanto@gmail.com

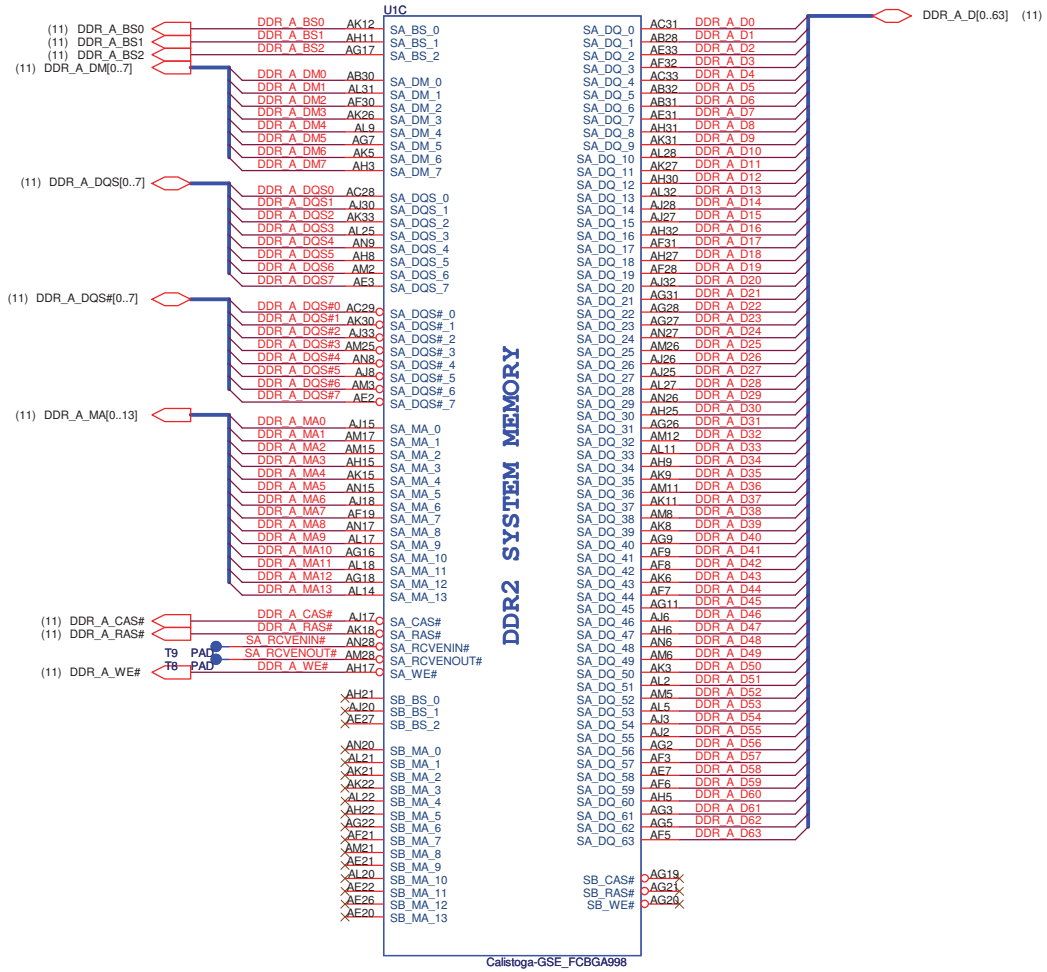

Security Classification	Compal Secret Data		
Issued Date	2006/08/18	Deciphered Date	2007/8/18

THIS SHEET OF ENGINEERING DRAWING IS THE PROPRIETARY PROPERTY OF COMPAL ELECTRONICS, INC. AND CONTAINS CONFIDENTIAL AND TRADE SECRET INFORMATION. THIS SHEET MAY NOT BE TRANSFERED FROM THE CUSTODY OF THE COMPETENT DIVISION OF R&D DEPARTMENT EXCEPT AS AUTHORIZED BY COMPAL ELECTRONICS, INC. NEITHER THIS SHEET NOR THE INFORMATION IT CONTAINS MAY BE USED BY OR DISCLOSED TO ANY THIRD PARTY WITHOUT PRIOR WRITTEN CONSENT OF COMPAL ELECTRONICS, INC.

Compal Electronics, Inc.

Title: Calistoga(2/5)-DDR2

Size: Custom | Document Number: KAV60 LA-5141P | Rev: 0.2

Date: Sunday, February 22, 2009 | Sheet 7 of 40

deddy.suyanto@gmail.com

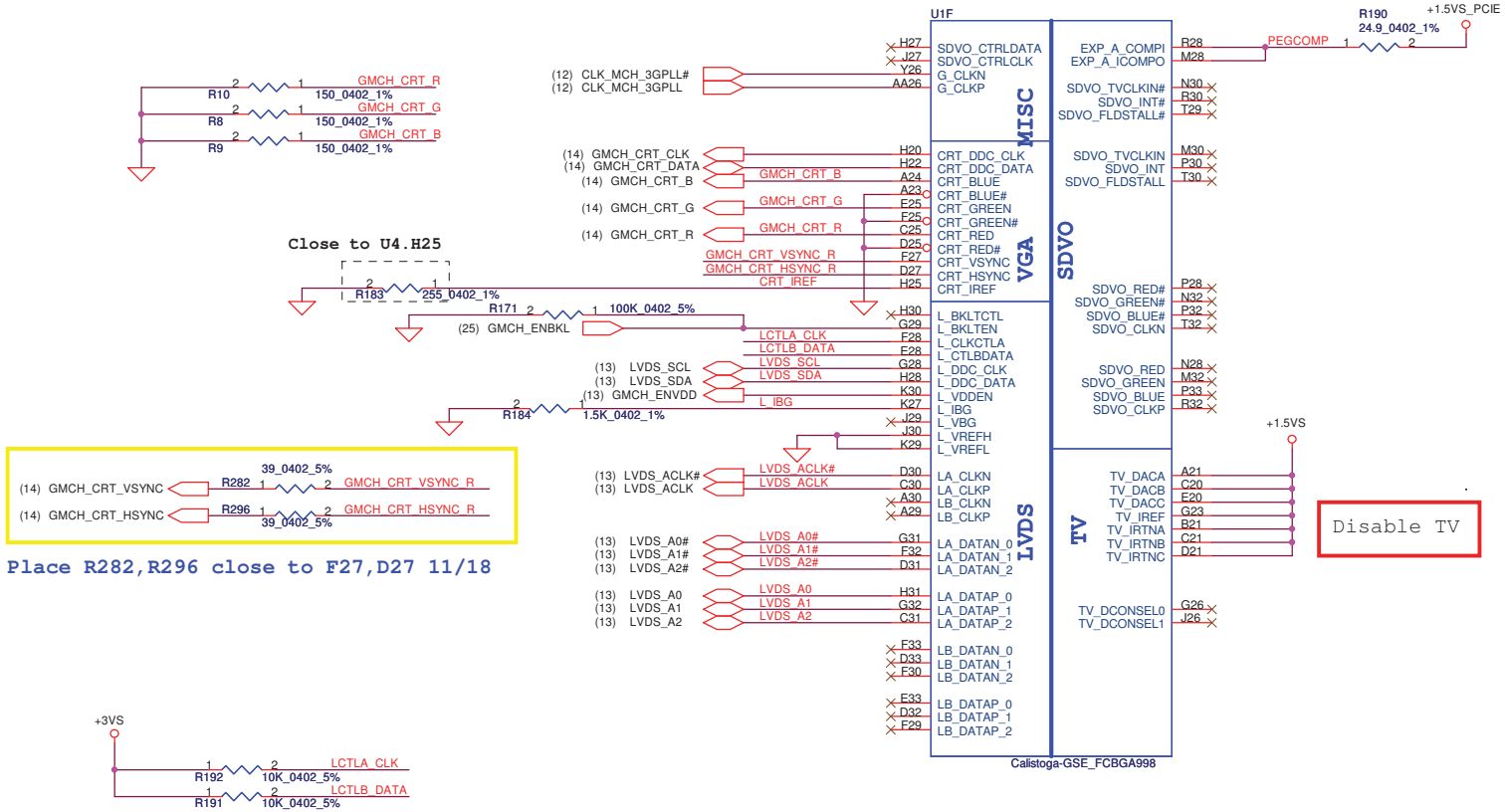

deddy.suyanto@gmail.com

Security Classification	Compal Secret Data		
Issued Date	2006/08/18	Deciphered Date	2007/8/18

THIS SHEET OF ENGINEERING DRAWING IS THE PROPRIETARY PROPERTY OF COMPAL ELECTRONICS, INC. AND CONTAINS CONFIDENTIAL AND TRADE SECRET INFORMATION. THIS SHEET MAY NOT BE TRANSFERED FROM THE CUSTODY OF THE COMPETENT DIVISION OF R&D DEPARTMENT EXCEPT AS AUTHORIZED BY COMPAL ELECTRONICS, INC. NEITHER THIS SHEET NOR THE INFORMATION IT CONTAINS MAY BE USED BY OR DISCLOSED TO ANY THIRD PARTY WITHOUT PRIOR WRITTEN CONSENT OF COMPAL ELECTRONICS, INC.

Compal Electronics, Inc.

Title: Calistoga(3/5)-VGA/LVDS/TV

Size: B | Document Number: KAV60 LA-5141P | Rev: 0.2

Date: Sunday, February 22, 2009 | Sheet 8 of 40

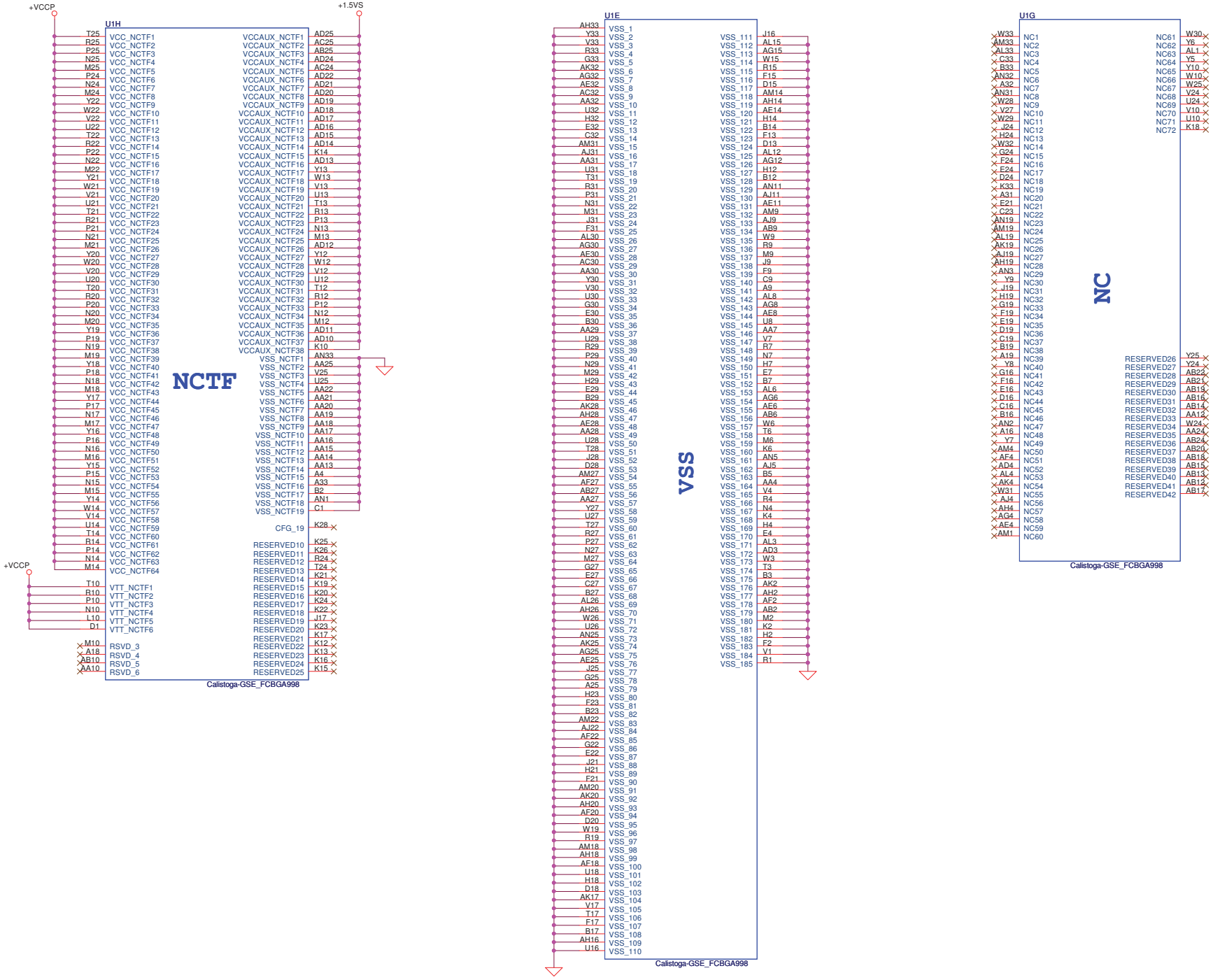

Security Classification	Compal Secret Data		
Issued Date	2006/08/18	Deciphered Date	2007/8/18

THIS SHEET OF ENGINEERING DRAWING IS THE PROPRIETARY PROPERTY OF COMPAL ELECTRONICS, INC. AND CONTAINS CONFIDENTIAL AND TRADE SECRET INFORMATION. THIS SHEET MAY NOT BE TRANSFERED FROM THE CUSTODY OF THE COMPETENT DIVISION OF R&D DEPARTMENT EXCEPT AS AUTHORIZED BY COMPAL ELECTRONICS, INC. NEITHER THIS SHEET NOR THE INFORMATION IT CONTAINS MAY BE USED BY OR DISCLOSED TO ANY THIRD PARTY WITHOUT PRIOR WRITTEN CONSENT OF COMPAL ELECTRONICS, INC.

Compal Electronics, Inc.

Title: Calistoga(4/5)-PWR/GND

Size: Custom | Document Number: KAV60 LA-5141P | Rev: 0.2

Date: Thursday, January 22, 2009 | Sheet 9 of 40

deddy.suyanto@gmail.com

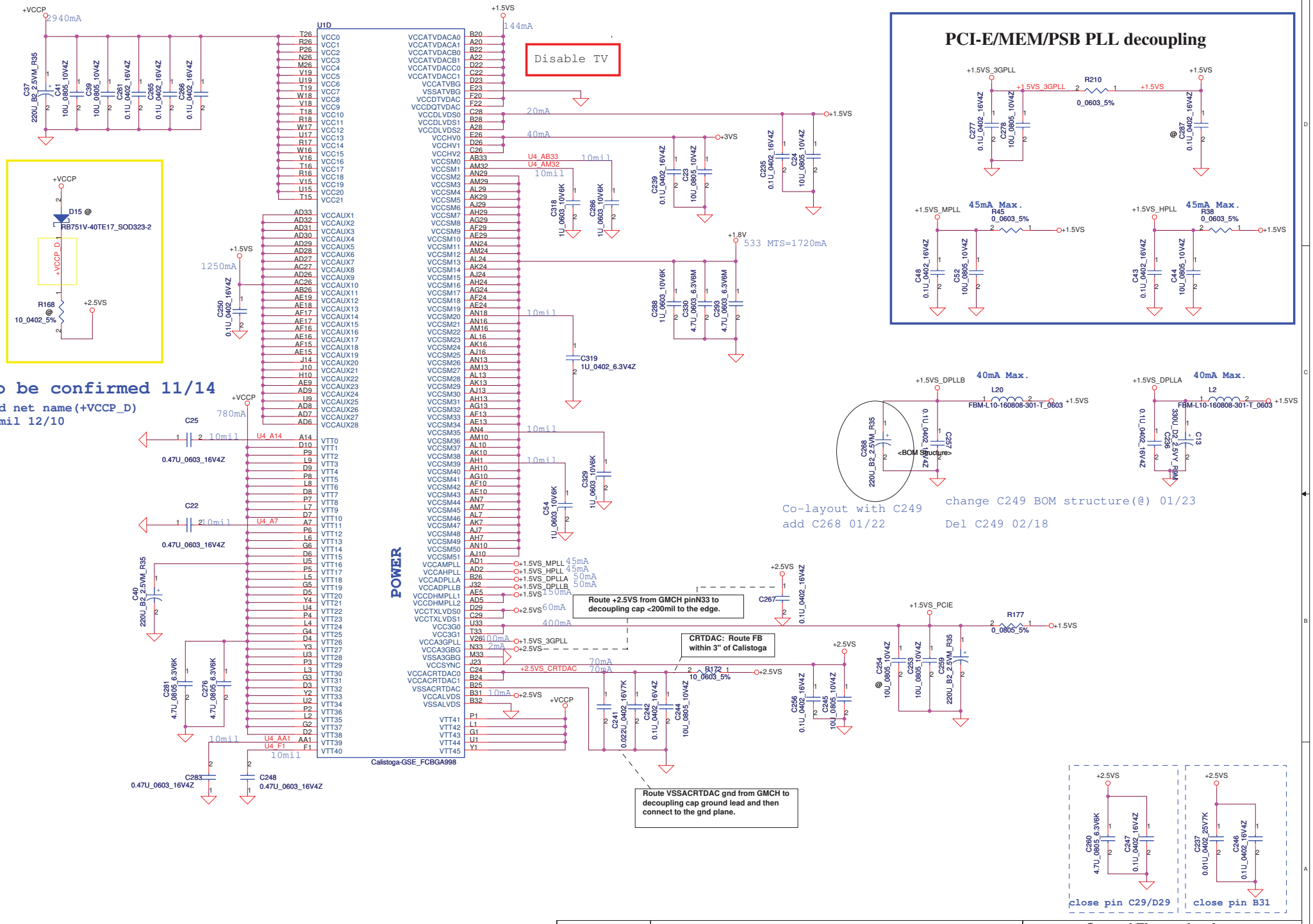

Security Classification	Compal Secret Data		
Issued Date	2006/08/18	Deciphered Date	2007/8/18

THIS SHEET OF ENGINEERING DRAWING IS THE PROPRIETARY PROPERTY OF COMPAL ELECTRONICS, INC. AND CONTAINS CONFIDENTIAL AND TRADE SECRET INFORMATION. THIS SHEET MAY NOT BE TRANSFERED FROM THE CUSTODY OF THE COMPETENT DIVISION OF R&D DEPARTMENT EXCEPT AS AUTHORIZED BY COMPAL ELECTRONICS, INC. NEITHER THIS SHEET NOR THE INFORMATION IT CONTAINS MAY BE USED BY OR DISCLOSED TO ANY THIRD PARTY WITHOUT PRIOR WRITTEN CONSENT OF COMPAL ELECTRONICS, INC.

Compal Electronics, Inc.

Title: Calistoga(5/5)-PWR/GND

Size: Custom | Document Number: KAV60 LA-5141P | Rev: 0.2

Date: Wednesday, February 18, 2009 | Sheet 10 of 40

deddy.suyanto@gmail.com

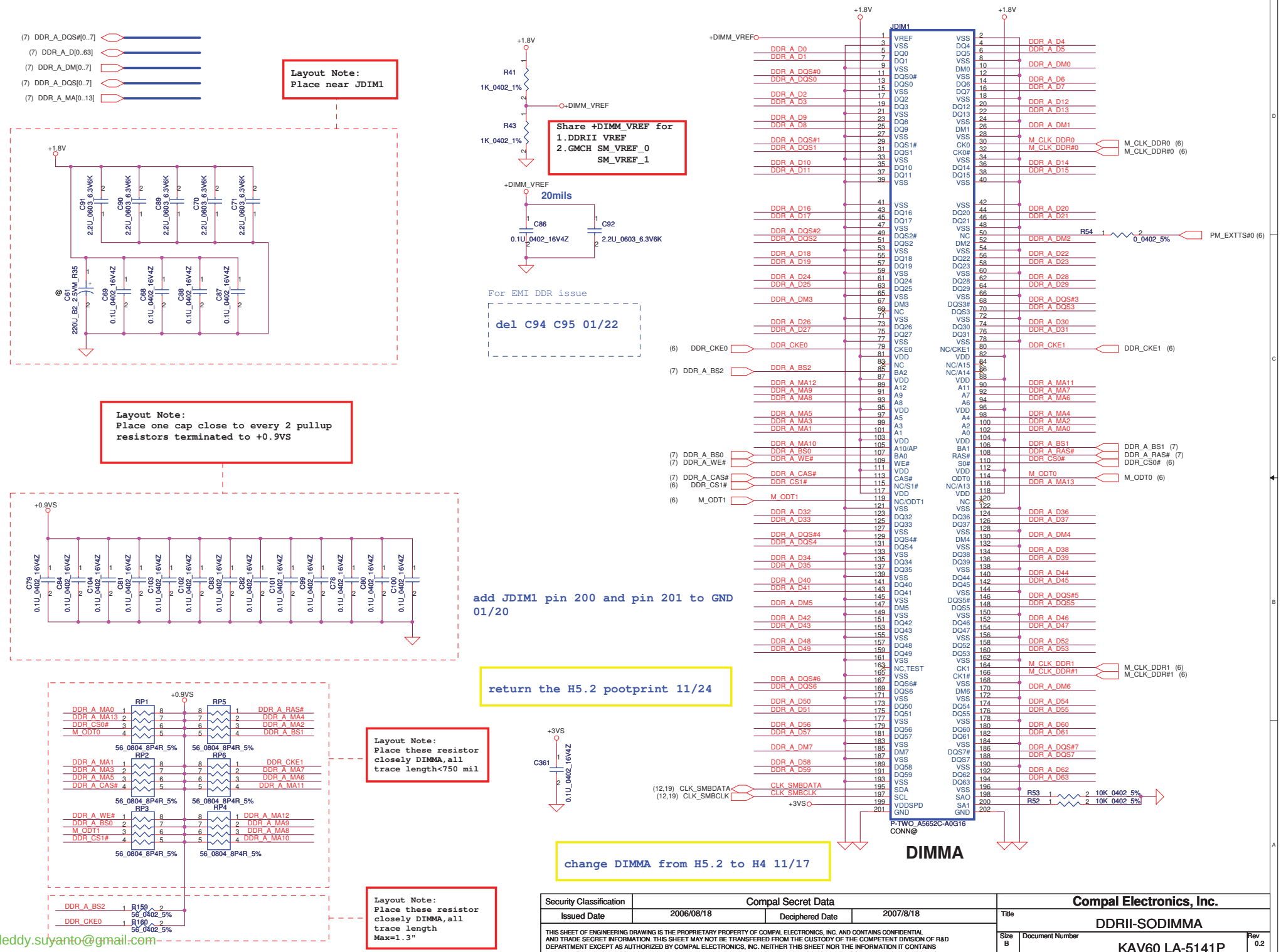

Security Classification	Compal Secret Data		
Issued Date	2006/08/18	Deciphered Date	2007/8/18

THIS SHEET OF ENGINEERING DRAWING IS THE PROPRIETARY PROPERTY OF COMPAL ELECTRONICS, INC. AND CONTAINS CONFIDENTIAL AND TRADE SECRET INFORMATION. THIS SHEET MAY NOT BE TRANSFERED FROM THE CUSTODY OF THE COMPETENT DIVISION OF R&D DEPARTMENT EXCEPT AS AUTHORIZED BY COMPAL ELECTRONICS, INC. NEITHER THIS SHEET NOR THE INFORMATION IT CONTAINS MAY BE USED BY OR DISCLOSED TO ANY THIRD PARTY WITHOUT PRIOR WRITTEN CONSENT OF COMPAL ELECTRONICS, INC.

Compal Electronics, Inc.

Title: DDRII-SODIMMA

Size: B | Document Number: KAV60 LA-5141P | Rev: 0.2

Date: Sunday, February 22, 2009 | Sheet 11 of 40

deddy.suyanto@gmail.com

FSC CLKSEL2	FSB CLKSEL1	FSA CLKSEL0	CPU MHz	SRC MHz	PCI MHz	REF MHz	DOT_96 MHz	USB MHz
0	0	0	266	100	33.3	14.318	96.0	48.0
0	0	1	133	100	33.3	14.318	96.0	48.0
0	1	0	200	100	33.3	14.318	96.0	48.0
0	1	1	166	100	33.3	14.318	96.0	48.0
1	0	0	333	100	33.3	14.318	96.0	48.0
1	0	1	100	100	33.3	14.318	96.0	48.0
1	1	0	400	100	33.3	14.318	96.0	48.0
1	1	1	Reserved					

add C164,C165 01/22

move C159 from P11 to P12 01/22

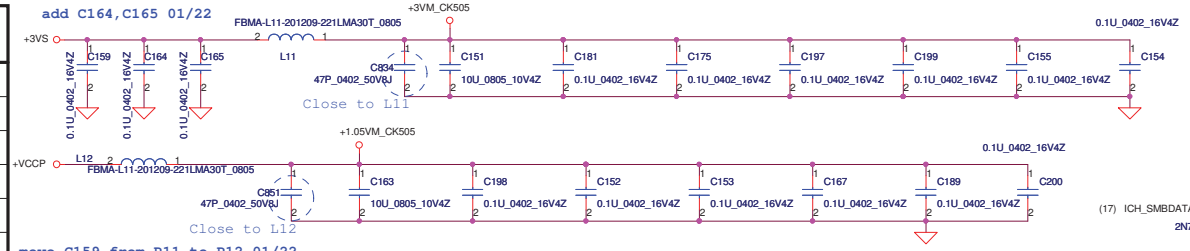

change R112,R108,Q10A,Q10B BOM structure 11/20

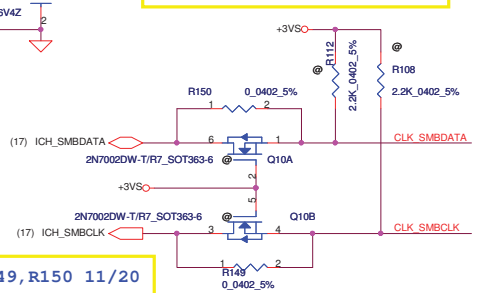

add R149,R150 11/20

SA000020K00 (Silego : SLG8SP556VTR)

SA000020H10 (ICS : ICS9LPRS387AKLFT)

change R141,R140,R147,R81,R91 R82,R97,R95,R98 BOM structure 12/29

change R141,R140,R147,R81,R91 R82,R97,R95,R98 BOM structure 01/17

del R143 and CLK_SD_48M 11/21

Change R137 from 12 ohm to 33 ohm 11/21

change R137 BOM structure 12/15 add R143 12/15

del R143 12/15

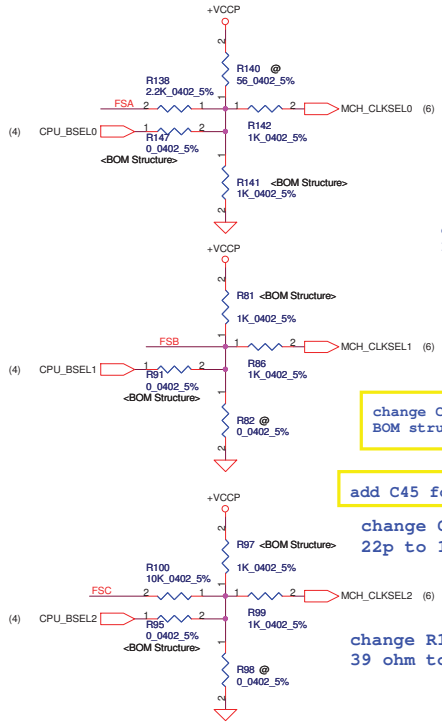

change C32 from 10P to 15p ohm 02/06

change R137 from 33 to 39 ohm 02/06

change C32 C33 C42 C45 BOM structre 12/14

add C45 for keypart 12/14

change C42,C45 from 22p to 15p 02/06

add C32,C33,C42 for keypart 12/08

change R115,R121 from 39 ohm to 47 ohm 02/06

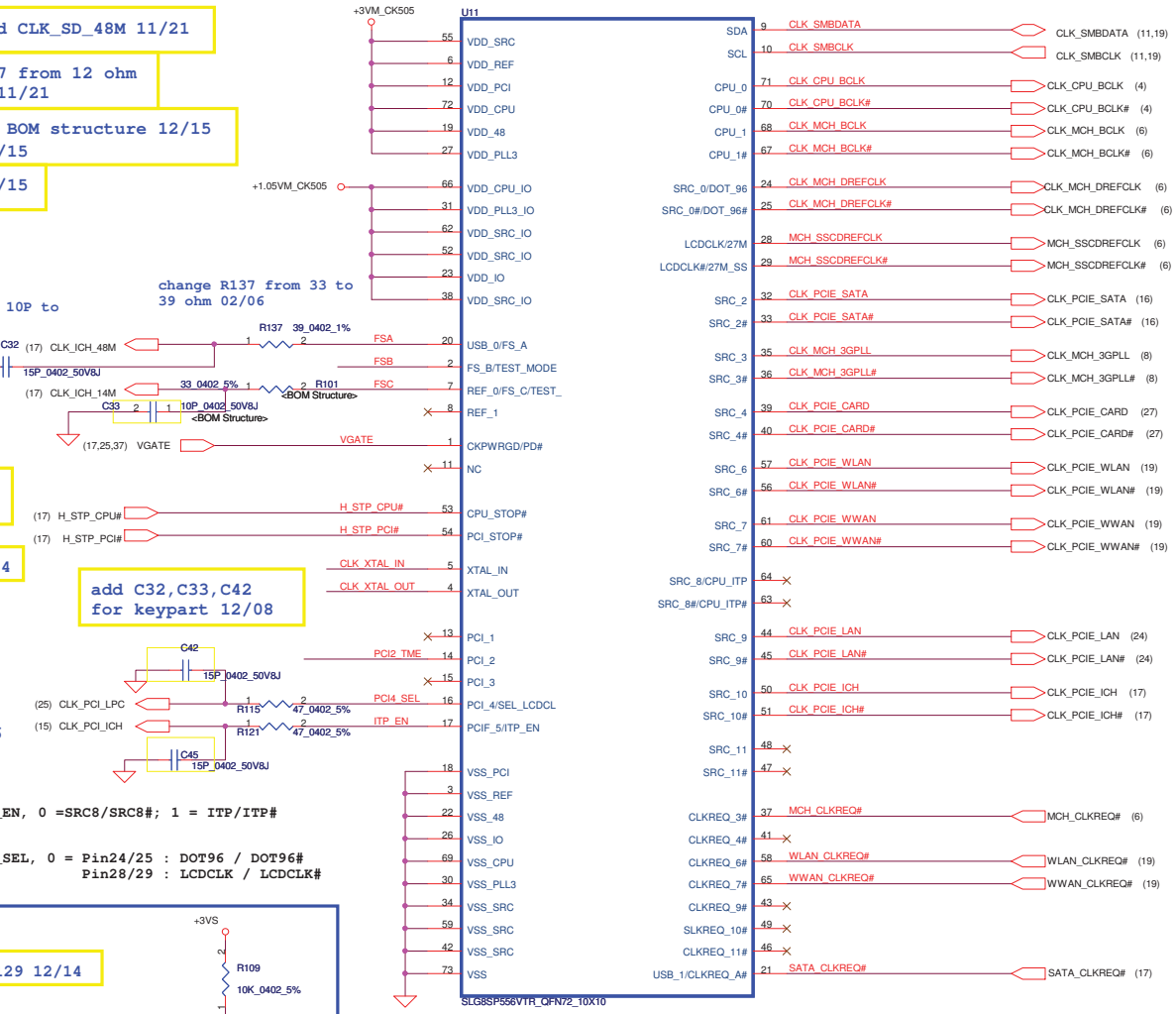

SRC PORT LIST

PORT	DEVICE
SRC0	MCH_DREFCLK
SRC2	SATA HDD
SRC3	MCH_3GPLL
SRC4	PCIE_CARDREADER
SRC6	PCIE_WLAN
SRC7	PCIE_WWAN
SRC8	
SRC9	PCIE_LAN
SRC10	PCIE_ICH
SRC11	

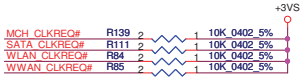

REQ PORT LIST

PORT	DEVICE
REQ_3#	MCH_3GPLL
REQ_4#	
REQ_6#	PCIE_WLAN
REQ_7#	PCIE_WWAN
REQ_9#	
REQ_10#	
REQ_11#	
REQ_A#	SATA

1 = Pin24/25 : SRC_0 / SRC_0#
Pin28/29 : 27M/27M_SS

For PCI2_TME:0=Overclocking of CPU and SRC allowed
(ICS only) 1=Overclocking of CPU and SRC NOT allowed

For ITP_EN, 0 =SRC8/SRC8#; 1 = ITP/ITP#

For PCI4_SEL, 0 = Pin24/25 : DOT96 / DOT96#
Pin28/29 : LCDCLK / LCDCLK#

Routing the trace at least 10mil

deddy.suyanto@gmail.com

change C162 from 27P to 22P 01/23

Del R129 12/14

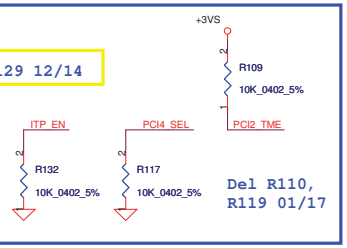

Del R110, R119 01/17

Security Classification	Compal Secret Data		
Issued Date	2007/10/15	Deciphered Date	2007/8/18

THIS SHEET OF ENGINEERING DRAWING IS THE PROPRIETARY PROPERTY OF COMPAL ELECTRONICS, INC. AND CONTAINS CONFIDENTIAL AND TRADE SECRET INFORMATION. THIS SHEET MAY NOT BE TRANSFERED FROM THE CUSTODY OF THE COMPETENT DIVISION OF R&D DEPARTMENT EXCEPT AS AUTHORIZED BY COMPAL ELECTRONICS, INC. NEITHER THIS SHEET NOR THE INFORMATION IT CONTAINS MAY BE USED BY OR DISCLOSED TO ANY THIRD PARTY WITHOUT PRIOR WRITTEN CONSENT OF COMPAL ELECTRONICS, INC.

Compal Electronics, Inc.

Title: Clock Generator CK505

Size | Document Number: KAV60 LA-5141P | Rev: 0.2

Date: Sunday, February 22, 2009 | Sheet 12 of 40

LCD POWER CIRCUIT

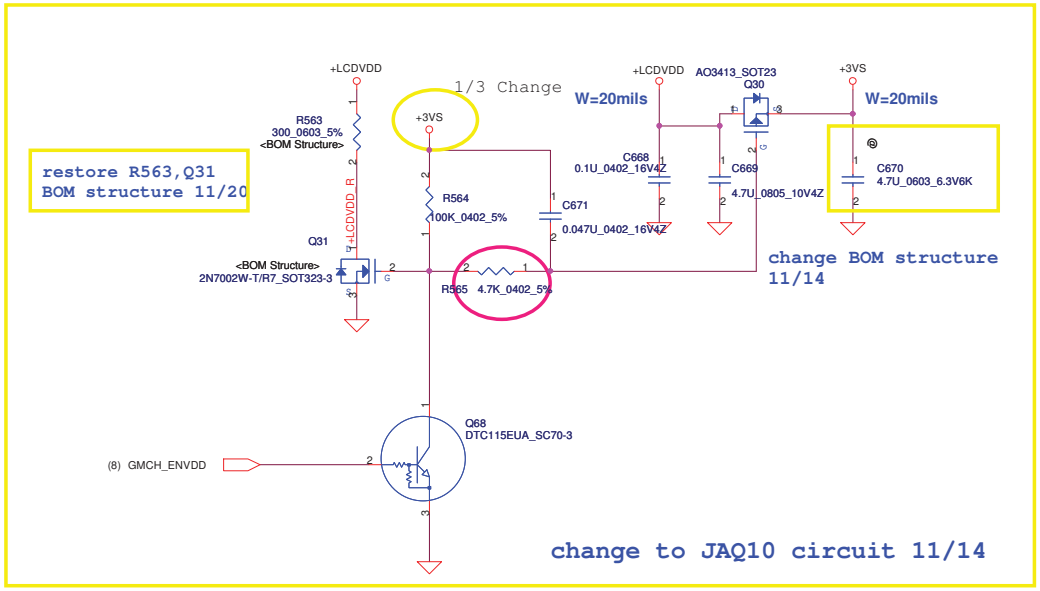

CMOS Camera CONN

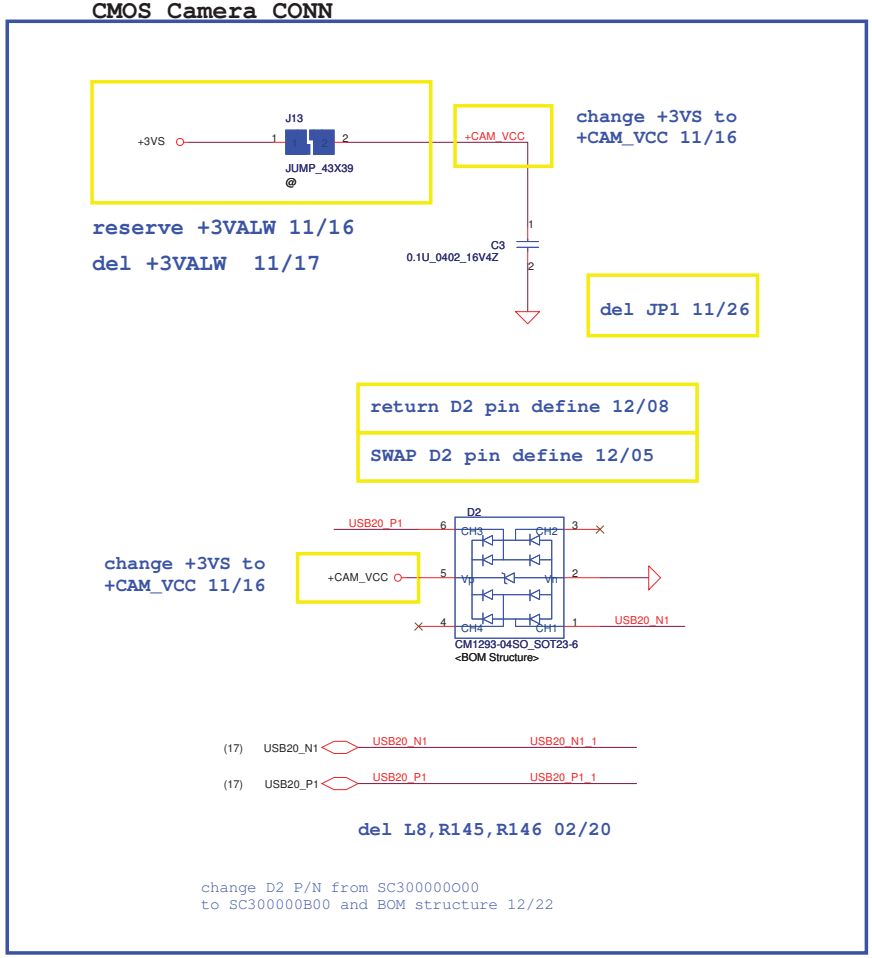

LCD/PANEL BD. Conn.

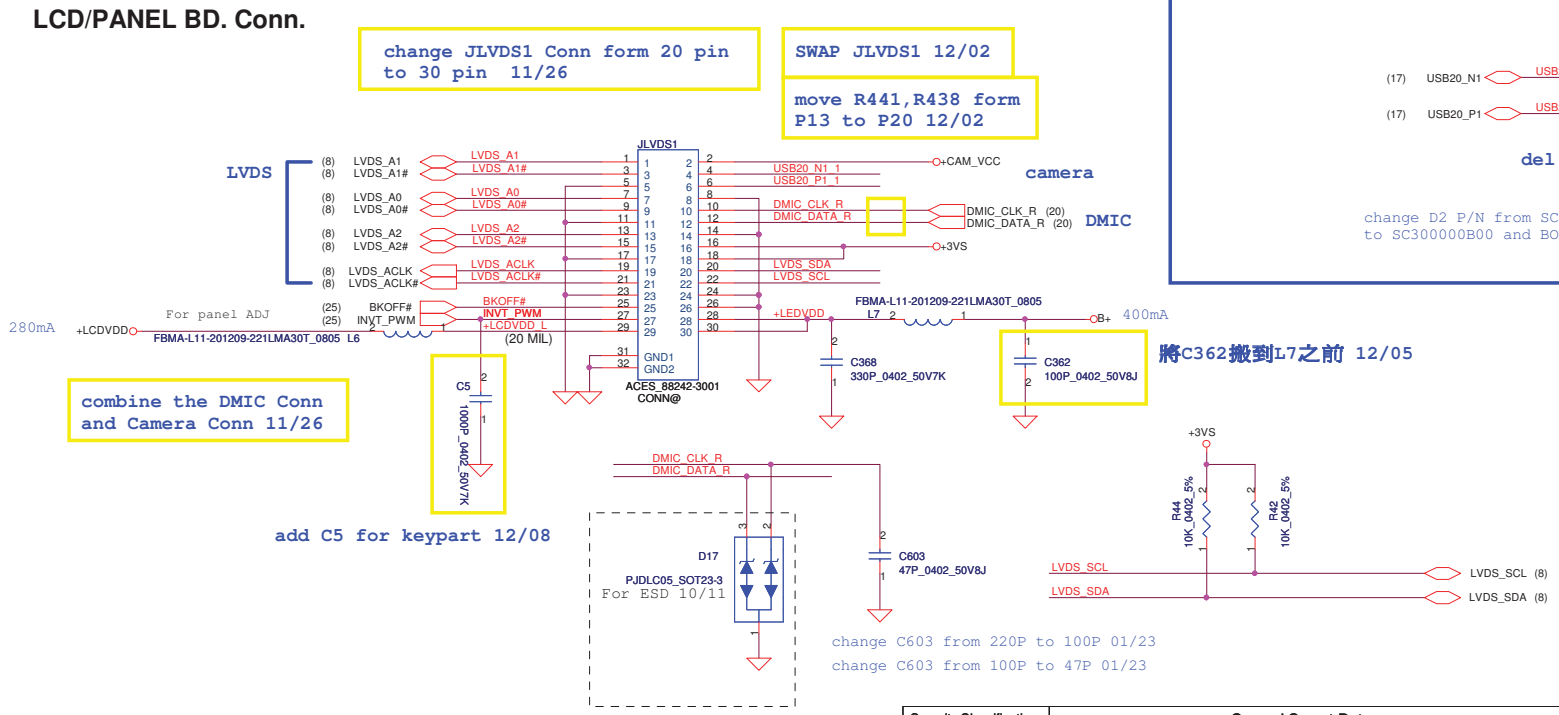

deddy.suyanto@gmail.com

Security Classification	Compal Secret Data		
Issued Date	2006/08/18	Deciphered Date	2007/8/18

THIS SHEET OF ENGINEERING DRAWING IS THE PROPRIETARY PROPERTY OF COMPAL ELECTRONICS, INC. AND CONTAINS CONFIDENTIAL AND TRADE SECRET INFORMATION. THIS SHEET MAY NOT BE TRANSFERED FROM THE CUSTODY OF THE COMPETENT DIVISION OF R&D DEPARTMENT EXCEPT AS AUTHORIZED BY COMPAL ELECTRONICS, INC. NEITHER THIS SHEET NOR THE INFORMATION IT CONTAINS MAY BE USED BY OR DISCLOSED TO ANY THIRD PARTY WITHOUT PRIOR WRITTEN CONSENT OF COMPAL ELECTRONICS, INC.

Compal Electronics, Inc.

Title: LVDS/Camera/DMIC conn

Size: B | Document Number: KAV60 LA-5141P | Rev: 0.2

Date: Sunday, February 22, 2009 | Sheet 13 of 40

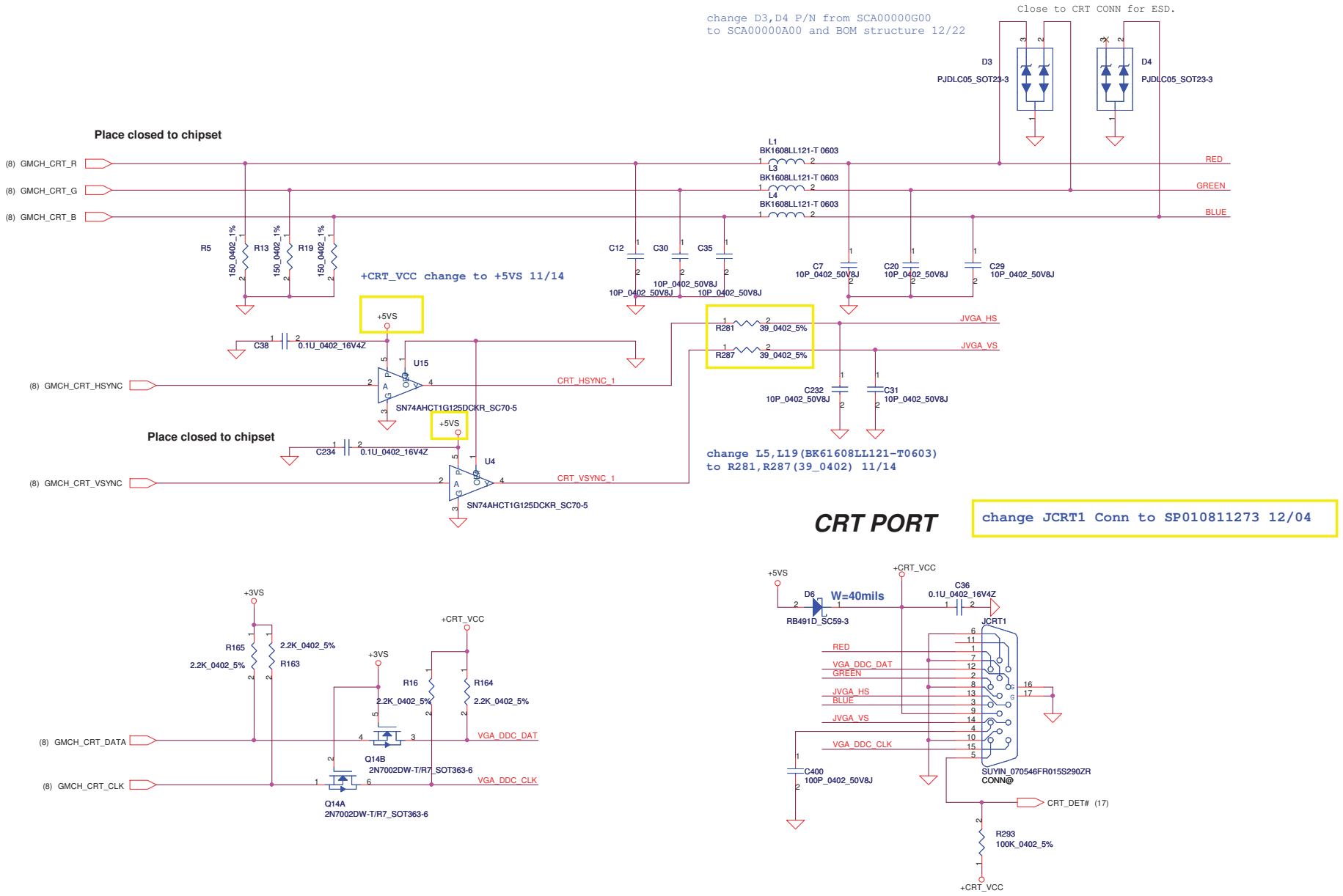

Security Classification	Compal Secret Data		
Issued Date	2006/08/18	Deciphered Date	2007/8/18

THIS SHEET OF ENGINEERING DRAWING IS THE PROPRIETARY PROPERTY OF COMPAL ELECTRONICS, INC. AND CONTAINS CONFIDENTIAL AND TRADE SECRET INFORMATION. THIS SHEET MAY NOT BE TRANSFERED FROM THE CUSTODY OF THE COMPETENT DIVISION OF R&D DEPARTMENT EXCEPT AS AUTHORIZED BY COMPAL ELECTRONICS, INC. NEITHER THIS SHEET NOR THE INFORMATION IT CONTAINS MAY BE USED BY OR DISCLOSED TO ANY THIRD PARTY WITHOUT PRIOR WRITTEN CONSENT OF COMPAL ELECTRONICS, INC.

Compal Electronics, Inc.

Title: CRT PORT

Size: B | Document Number: KAV60 LA-5141P | Rev: 0.2

Date: Sunday, February 22, 2009 | Sheet 14 of 40

deddy.suyanto@gmail.com

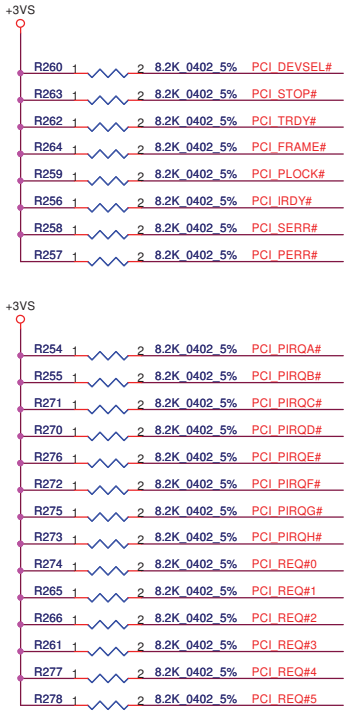

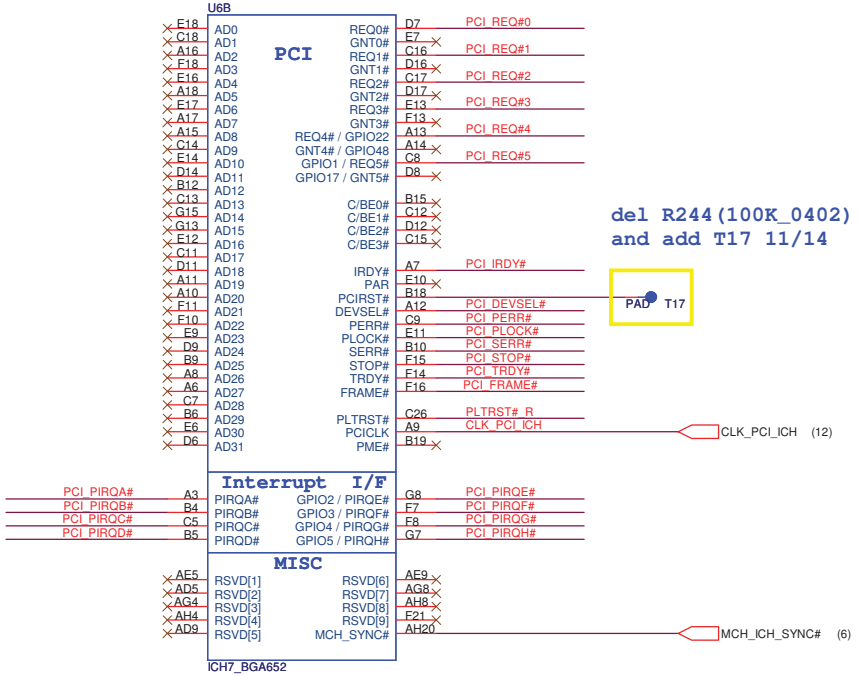

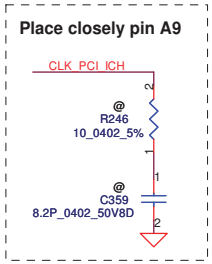

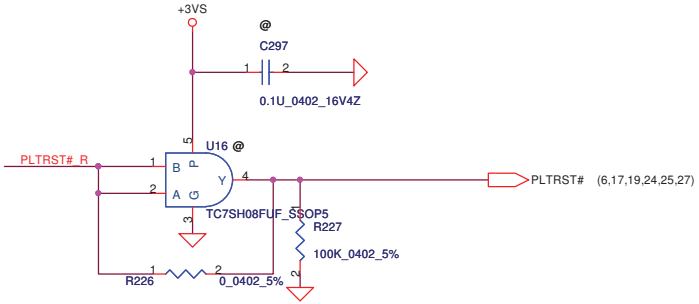

Security Classification	Compal Secret Data		
Issued Date	2006/08/18	Deciphered Date	2007/8/18

THIS SHEET OF ENGINEERING DRAWING IS THE PROPRIETARY PROPERTY OF COMPAL ELECTRONICS, INC. AND CONTAINS CONFIDENTIAL AND TRADE SECRET INFORMATION. THIS SHEET MAY NOT BE TRANSFERED FROM THE CUSTODY OF THE COMPETENT DIVISION OF R&D DEPARTMENT EXCEPT AS AUTHORIZED BY COMPAL ELECTRONICS, INC. NEITHER THIS SHEET NOR THE INFORMATION IT CONTAINS MAY BE USED BY OR DISCLOSED TO ANY THIRD PARTY WITHOUT PRIOR WRITTEN CONSENT OF COMPAL ELECTRONICS, INC.

Compal Electronics, Inc.

Title: ICH7M(1/4)HUB,PCI,HOST

Size | Document Number: KAV60 LA-5141P | Rev: 0.2

Date: Sunday, February 22, 2009 | Sheet 15 of 40

deddy.suyanto@gmail.com

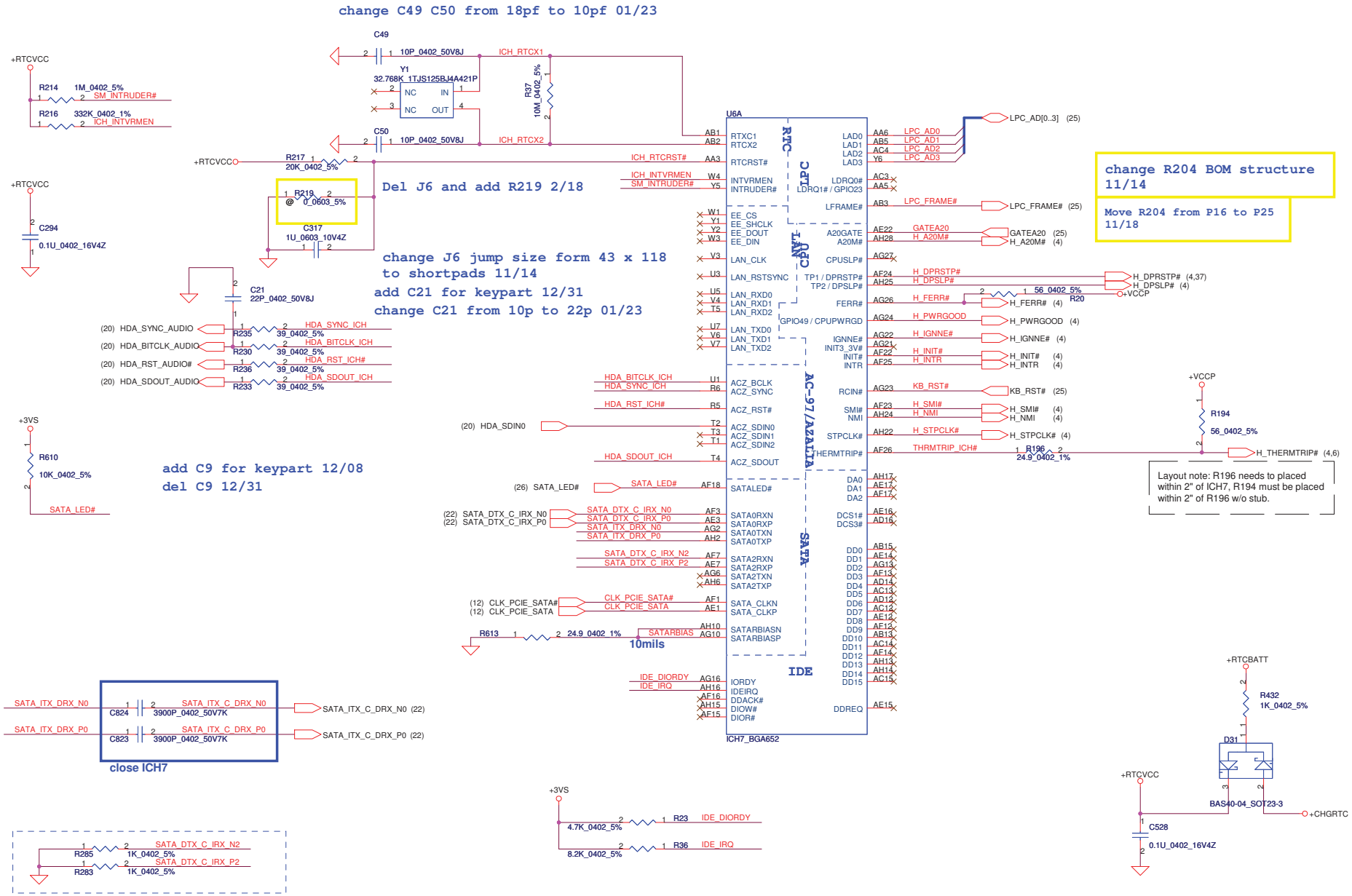

Security Classification	Compal Secret Data		
Issued Date	2006/08/18	Deciphered Date	2007/8/18

THIS SHEET OF ENGINEERING DRAWING IS THE PROPRIETARY PROPERTY OF COMPAL ELECTRONICS, INC. AND CONTAINS CONFIDENTIAL AND TRADE SECRET INFORMATION. THIS SHEET MAY NOT BE TRANSFERED FROM THE CUSTODY OF THE COMPETENT DIVISION OF R&D DEPARTMENT EXCEPT AS AUTHORIZED BY COMPAL ELECTRONICS, INC. NEITHER THIS SHEET NOR THE INFORMATION IT CONTAINS MAY BE USED BY OR DISCLOSED TO ANY THIRD PARTY WITHOUT PRIOR WRITTEN CONSENT OF COMPAL ELECTRONICS, INC.

Compal Electronics, Inc.

Title: ICH7M(2/4)LAN,ATA,LPC,RTC

Size: Custom | Document Number: KAV60 LA-5141P | Rev: 0.2

Date: Sunday, February 22, 2009 | Sheet 16 of 40

deddy.suyanto@gmail.com

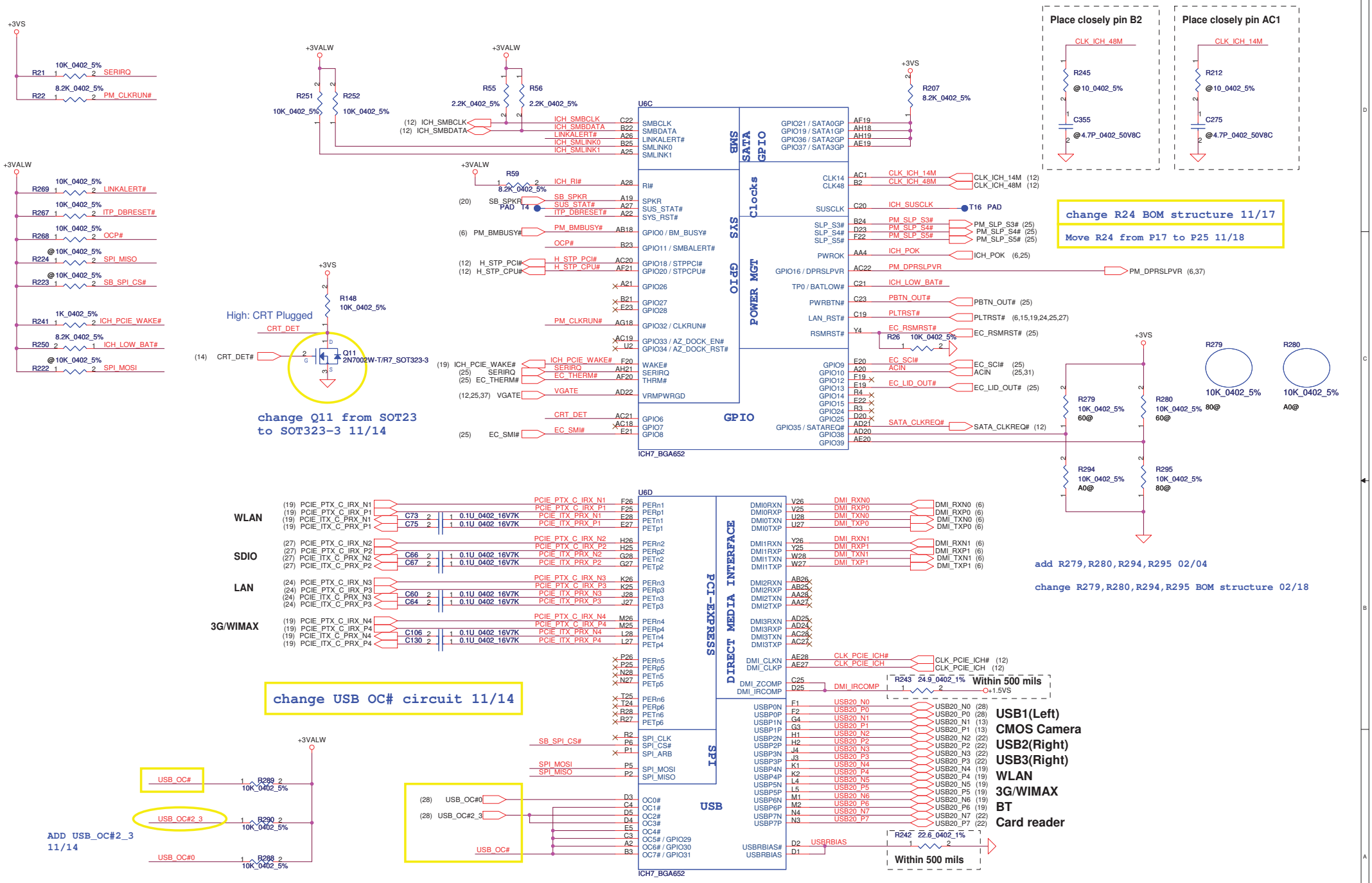

Security Classification	Compal Secret Data		
Issued Date	2006/08/18	Deciphered Date	2007/8/18

THIS SHEET OF ENGINEERING DRAWING IS THE PROPRIETARY PROPERTY OF COMPAL ELECTRONICS, INC. AND CONTAINS CONFIDENTIAL AND TRADE SECRET INFORMATION. THIS SHEET MAY NOT BE TRANSFERED FROM THE CUSTODY OF THE COMPETENT DIVISION OF R&D DEPARTMENT EXCEPT AS AUTHORIZED BY COMPAL ELECTRONICS, INC. NEITHER THIS SHEET NOR THE INFORMATION IT CONTAINS MAY BE USED BY OR DISCLOSED TO ANY THIRD PARTY WITHOUT PRIOR WRITTEN CONSENT OF COMPAL ELECTRONICS, INC.

Compal Electronics, Inc.

Title: ICH7M(3/4)USB,GPIO,PCIE

Size: Custom | Document Number: KAV60 LA-5141P | Rev: 0.2

Date: Sunday, February 22, 2009 | Sheet 17 of 40

deddy.suyanto@gmail.com

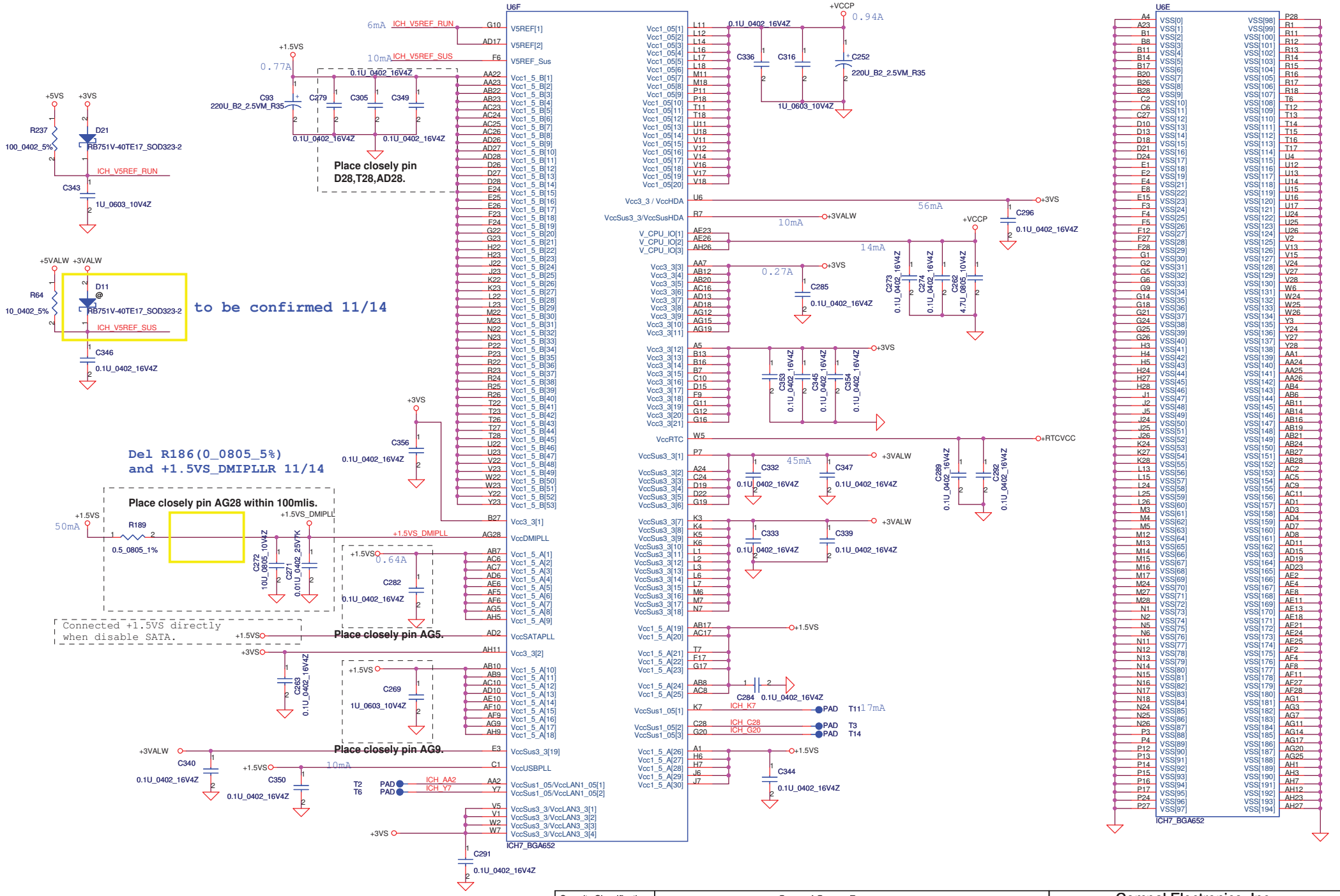

Security Classification	Compal Secret Data		
Issued Date	2006/08/18	Deciphered Date	2007/8/18

THIS SHEET OF ENGINEERING DRAWING IS THE PROPRIETARY PROPERTY OF COMPAL ELECTRONICS, INC. AND CONTAINS CONFIDENTIAL AND TRADE SECRET INFORMATION. THIS SHEET MAY NOT BE TRANSFERED FROM THE CUSTODY OF THE COMPETENT DIVISION OF R&D DEPARTMENT EXCEPT AS AUTHORIZED BY COMPAL ELECTRONICS, INC. NEITHER THIS SHEET NOR THE INFORMATION IT CONTAINS MAY BE USED BY OR DISCLOSED TO ANY THIRD PARTY WITHOUT PRIOR WRITTEN CONSENT OF COMPAL ELECTRONICS, INC.

Compal Electronics, Inc.

Title: ICH7M(4/4)POWER/GND

Size: Custom | Document Number: KAV60 LA-5141P | Rev: 0.2

Date: Thursday, January 22, 2009 | Sheet 18 of 40

deddy.suyanto@gmail.com

Mini-Express Card for WLAN

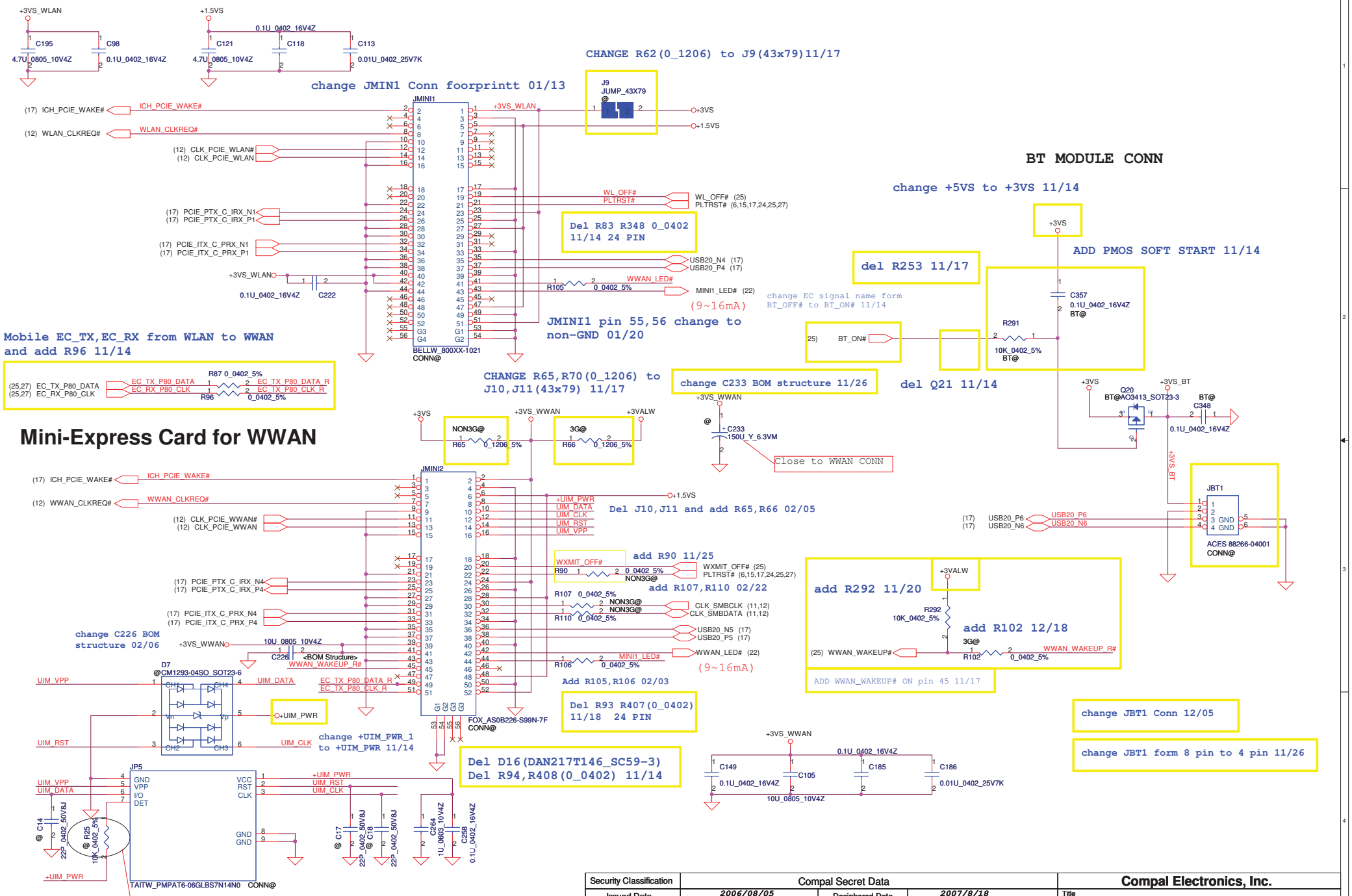

Security Classification	Compal Secret Data		
Issued Date	2006/08/05	Deciphered Date	2007/8/18

THIS SHEET OF ENGINEERING DRAWING IS THE PROPRIETARY PROPERTY OF COMPAL ELECTRONICS, INC. AND CONTAINS CONFIDENTIAL AND TRADE SECRET INFORMATION. THIS SHEET MAY NOT BE TRANSFERED FROM THE CUSTODY OF THE COMPETENT DIVISION OF R&D DEPARTMENT EXCEPT AS AUTHORIZED BY COMPAL ELECTRONICS, INC. NEITHER THIS SHEET NOR THE INFORMATION IT CONTAINS MAY BE USED BY OR DISCLOSED TO ANY THIRD PARTY WITHOUT PRIOR WRITTEN CONSENT OF COMPAL ELECTRONICS, INC.

Compal Electronics, Inc.

Title: Mini-Card/BT CONN

Size | Document Number: KAV60 LA-5141P | Rev: 0.2

Date: Sunday, February 22, 2009 | Sheet 19 of 40

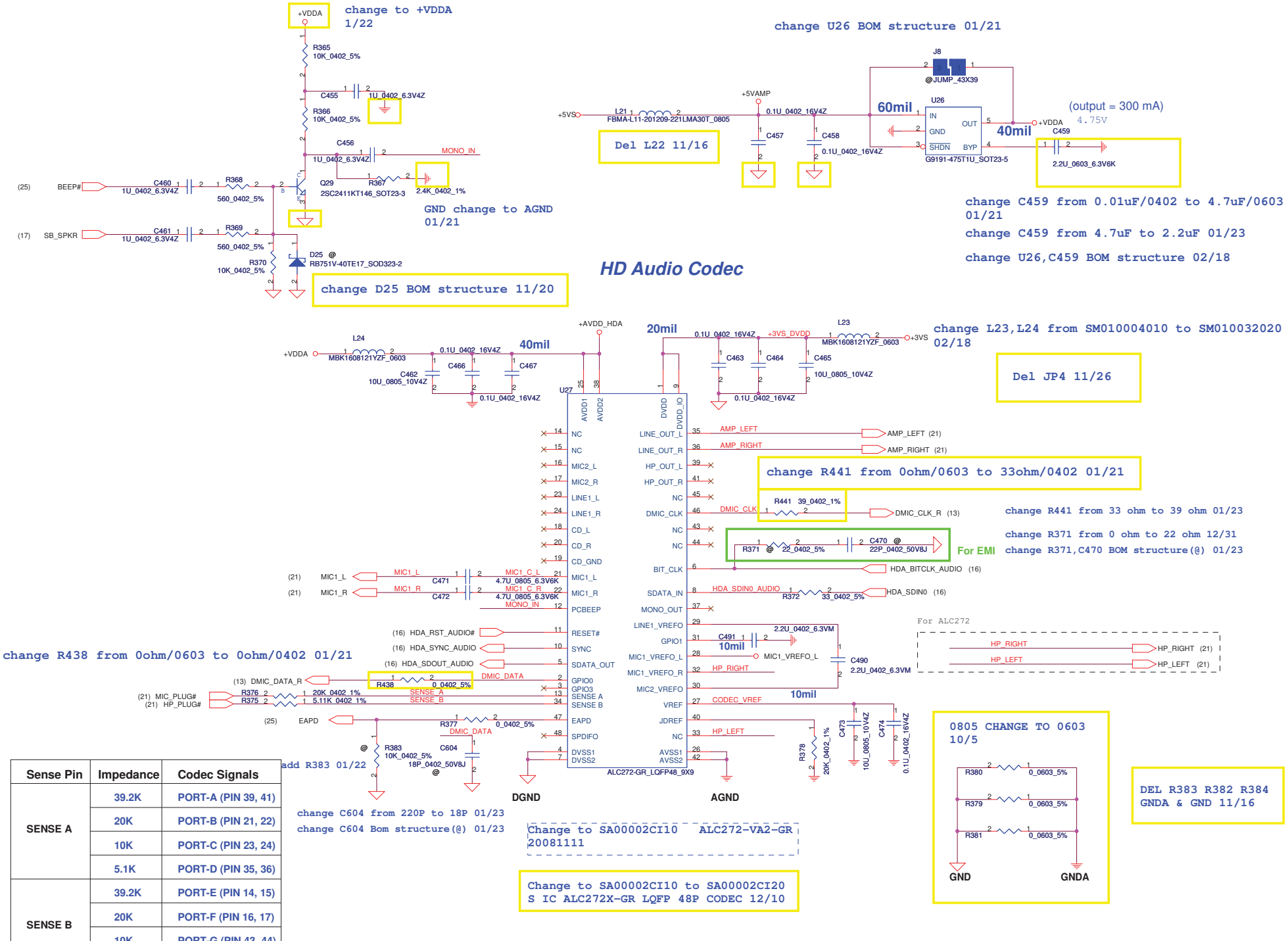

Sense Pin	Impedance	Codec Signals
SENSE A	39.2K	PORT-A (PIN 39, 41)
	20K	PORT-B (PIN 21, 22)
	10K	PORT-C (PIN 23, 24)
	5.1K	PORT-D (PIN 35, 36)
SENSE B	39.2K	PORT-E (PIN 14, 15)
	20K	PORT-F (PIN 16, 17)
	10K	PORT-G (PIN 43, 44)
	5.1K	PORT-H (PIN 45, 46)

deddy.suyanto@gmail.com

Security Classification	Compal Secret Data		
Issued Date	2006/12/25	Deciphered Date	2007/8/18

THIS SHEET OF ENGINEERING DRAWING IS THE PROPRIETARY PROPERTY OF COMPAL ELECTRONICS, INC. AND CONTAINS CONFIDENTIAL AND TRADE SECRET INFORMATION. THIS SHEET MAY NOT BE TRANSFERED FROM THE CUSTODY OF THE COMPETENT DIVISION OF R&D DEPARTMENT EXCEPT AS AUTHORIZED BY COMPAL ELECTRONICS, INC. NEITHER THIS SHEET NOR THE INFORMATION IT CONTAINS MAY BE USED BY OR DISCLOSED TO ANY THIRD PARTY WITHOUT PRIOR WRITTEN CONSENT OF COMPAL ELECTRONICS, INC.

Compal Electronics, Inc.

Title: HD Audio Codec ALC272

Size: B | Document Number: KAV60 LA-5141P | Rev: 0.2

Date: Sunday, February 22, 2009 | Sheet 20 of 40

add J12 12/04

J12 +5VALW 2 1 +5VAMP_J @JUMP_43X39

+5VS change to +5VALW 12/11

change +5VAMP to +5VS 12/02

+5VAMP_J

C384 10U_0805_10V4Z C385 0.1U_0402_16V4Z

U13 TPA6017A2_TSSOP20

VDD 16, PVDD1 15, PVDD2 6

C392 0.47U_0603_10V7K RIN+ 7
(20) AMP_RIGHT C394 0.47U_0603_10V7K R94 0_0402_5% AMP_C_RIGHT RIN- 17
C395 0.47U_0603_10V7K LIN+ 9
(20) AMP_LEFT C397 0.47U_0603_10V7K R83 0_0402_5% AMP_C_LEFT LIN- 5

Add R94,R87 Vender suggesttion 11/16

(25) EC_MUTE# EC_MUTE# SHUTDOWN 19

GND5 21, GND1 20, GND2 13, GND3 11, GND4 1

GAIN0 2 GAIN0
GAIN1 3 GAIN1
ROUT+ 18 SPKR+
ROUT- 14 SPKR-
LOUT+ 4 SPKL+
LOUT- 8 SPKL-
NC 12
BYPASS 10

Keep 10 mil width

C398 0.47U_0603_10V7K

+5VAMP_J

@ R315 100K_0402_5% @ R316 100K_0402_5%
R318 100K_0402_5% R319 100K_0402_5%

20081029 Update to 6dB

Int. Speaker Conn.

20mil

SPKL+ SPKL- SPKR+ SPKR- → SPK_L+ SPK_L- SPK_R+ SPK_R-

CONN@ ACES 88266-04001 JP20 4 GND 3 GND 2 1 6 5

Left

Right

change JP20 Conn and pin design 11/26

del R388,R387,R386,R385,D10,D13 12/11

change JP20 Conn 01/16

SWAP JP20 01/20

Analog ground change to digital ground 08/11/16

LINE Out/Headphone Out

C485 330P_0402_50V7K C486 330P_0402_50V7K

20mil

(20) HP_LEFT HP_LEFT R374 56.2_0402_1% HPOUT_L_1 L26 FBM-11-160808-700T_0603 HPOUT_L_2
(20) HP_RIGHT HP_RIGHT R373 56.2_0402_1% HPOUT_R_1 L25 FBM-11-160808-700T_0603 HPOUT_R_2

Chenge to 56.2 ohm for DA-HP FSOV 20081104

(20) HP_PLUG# HP_PLUG#

JHP1 FOX_JAS7331-K30H9-7F CONN@ SHLD1 SHLD2

11/16

MIC1_VREFO_L MIC1_VREFO_L

D26 RB751V-40TE17_SOD323-2 D27 RB751V-40TE17_SOD323-2

R403 4.7K_0402_5% R402 4.7K_0402_5%

(20) MIC1_L R405 1K_0603_1% L28 FBM-11-160808-700T_0603 MIC2_L_1
(20) MIC1_R R404 1K_0603_1% L27 FBM-11-160808-700T_0603 MIC2_R_1

C488 220P_0402_50V8J C489 220P_0402_50V8J

(20) MIC_PLUG# MIC_PLUG#

MIC JACK

JMIC1 FOX_JAS7331-K30H9-7F CONN@ SHLD1 SHLD2

(HDA Jack)

deddy.suyanto@gmail.com

Security Classification	Compal Secret Data		
Issued Date	2006/12/25	Deciphered Date	2007/8/18

THIS SHEET OF ENGINEERING DRAWING IS THE PROPRIETARY PROPERTY OF COMPAL ELECTRONICS, INC. AND CONTAINS CONFIDENTIAL AND TRADE SECRET INFORMATION. THIS SHEET MAY NOT BE TRANSFERED FROM THE CUSTODY OF THE COMPETENT DIVISION OF R&D DEPARTMENT EXCEPT AS AUTHORIZED BY COMPAL ELECTRONICS, INC. NEITHER THIS SHEET NOR THE INFORMATION IT CONTAINS MAY BE USED BY OR DISCLOSED TO ANY THIRD PARTY WITHOUT PRIOR WRITTEN CONSENT OF COMPAL ELECTRONICS, INC.

Compal Electronics, Inc.

Title: Amplifier & Audio Jack

Size B | Document Number: KAV60 LA-5141P | Rev 0.2

Date: Sunday, February 22, 2009 | Sheet 21 of 40

Move SATA HDD Conn to small board 11/21

SWAP JP7 pin define 12/03

To cardreader/B Conn.

	KSO1
KSI1	WL_BTN#
KSI5	3G_BTN#

+3VS_READER change to +3VALW 12/15

add net name BATT_AMB_LED# BATT_GRN_LED# 12/15

SATA&CARDREADER&USB Conn

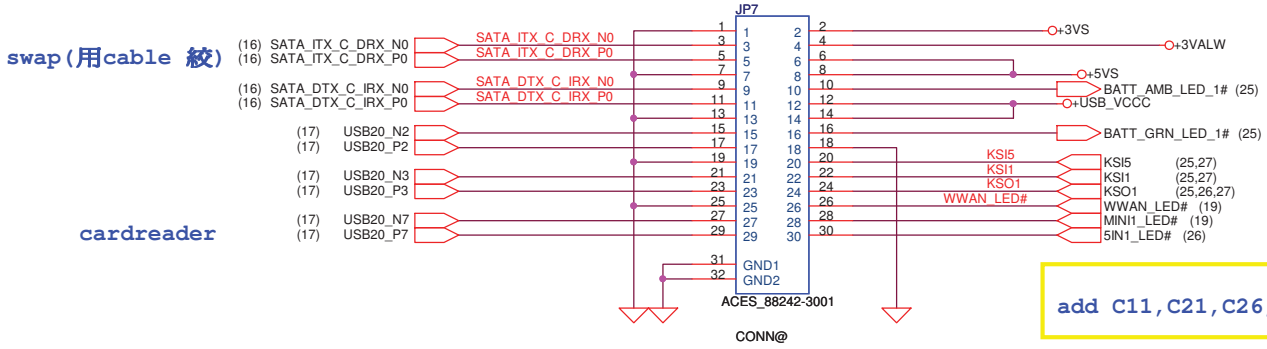

add J15 J16 12/08

del J15,J16,C21 12/15

add C11,C21,C26,C27 for keypart 12/08

add C28 for keypart 01/14

del C11,C28,C26 01/21

del C26 02/03

ADD SATA&CARDREADER&USB Conn(JP7) 11/26

Security Classification	Compal Secret Data		
Issued Date	2006/08/18	Deciphered Date	2007/8/18

THIS SHEET OF ENGINEERING DRAWING IS THE PROPRIETARY PROPERTY OF COMPAL ELECTRONICS, INC. AND CONTAINS CONFIDENTIAL AND TRADE SECRET INFORMATION. THIS SHEET MAY NOT BE TRANSFERED FROM THE CUSTODY OF THE COMPETENT DIVISION OF R&D DEPARTMENT EXCEPT AS AUTHORIZED BY COMPAL ELECTRONICS, INC. NEITHER THIS SHEET NOR THE INFORMATION IT CONTAINS MAY BE USED BY OR DISCLOSED TO ANY THIRD PARTY WITHOUT PRIOR WRITTEN CONSENT OF COMPAL ELECTRONICS, INC.

Compal Electronics, Inc.

Title: SATA/Cardreader/USB Conn

Size: B | Document Number: KAV60 LA-5141P | Rev: 0.2

Date: Sunday, February 22, 2009 | Sheet 22 of 40

deddy.suyanto@gmail.com

Move Card Reader to small board 11/21

Security Classification	Compal Secret Data		
Issued Date	2006/08/04	Deciphered Date	2007/8/18

THIS SHEET OF ENGINEERING DRAWING IS THE PROPRIETARY PROPERTY OF COMPAL ELECTRONICS, INC. AND CONTAINS CONFIDENTIAL AND TRADE SECRET INFORMATION. THIS SHEET MAY NOT BE TRANSFERED FROM THE CUSTODY OF THE COMPETENT DIVISION OF R&D DEPARTMENT EXCEPT AS AUTHORIZED BY COMPAL ELECTRONICS, INC. NEITHER THIS SHEET NOR THE INFORMATION IT CONTAINS MAY BE USED BY OR DISCLOSED TO ANY THIRD PARTY WITHOUT PRIOR WRITTEN CONSENT OF COMPAL ELECTRONICS, INC.

Compal Electronics, Inc.

Title: **5 in 1 Card reader**

Size: B | Document Number: **KAV60 LA-5141P** | Rev: 0.2

Date: Thursday, January 22, 2009 | Sheet 23 of 40

deddy.suyanto@gmail.com

change R644 from 0603 to 0805 12/31
change R643 from 0603 to 0402 12/31
change C841 from 0603 to 0402 12/31
add R651 0_0402 02/03
change C841 from 0402 1U to 0603 1U 02/03

AR8114A: remove L1,C881,C885,R643. C841=1uF
AR8132:remove R644,R645. C841=0.1uF

Chang C855 form 4.7U to 10U 11/16 vendor suggest

del C843,C844 12/02

AR8132M-AL1E QFN 48P E-LAN CTRL
change 8132 P/N to SA000033N00 12/19

Place Close to Chip

Atheros
AR8114A 10/100 LAN

AR8114-AL1E_QFN48_6X6

<BOM Structure>

change C852,C853,Y5 BOM structure 12/15
add C55 on page 24 12/15

del C55 12/16
change C852,C853 from 27p to 15p 01/23

350uH_NS0013LF

FOX_JM36113-P2221-7F
CONN@

For EMI.

change JRJ45 Conn 11/26

deddy.suyanto@gmail.com

AT24C02BN-SH-T_SO8

Place Close to Chip

ADD C160 01/13

Chang C846 form 4.7U to 10U 11/16 vendor suggest

Chang C160 from 0603 to 0402 01/20

close to pin2

Layout Notice : Place as close chip as possible.

change C847 from 0.1u to 1u 12/02

close to pin2

change BJT form MMJT9435T1G to MBT35200 11/16

close to pin5

MBT35200MT1G_TSOP6

change L29,L30 from 0805 to 0603 12/31

del R637 R638 12/31

CHECK 01/13

If overclocking, R638, L30 stuffed and R637 removed.
If not overclocking, R637, L30 suffed and R638 removed.
AR8132:L30=0ohm,C856=0.1uF. remove C857

change L30,C856,C857 BOM structure 12/22

C865 close to Pin46
AR8114A: C865=0.1uF
AR8132:C865=1uF

Place Close to Pin 28、32、45、46

change C873 from 0.1u to 1u 12/02

Place Close to Pin15、19、25

close to pin5

Place Close to Pin8、16、22、36、39

close to pin8

Security Classification	Compal Secret Data		
Issued Date	2006/08/04	Deciphered Date	2007/8/18

THIS SHEET OF ENGINEERING DRAWING IS THE PROPRIETARY PROPERTY OF COMPAL ELECTRONICS, INC. AND CONTAINS CONFIDENTIAL AND TRADE SECRET INFORMATION. THIS SHEET MAY NOT BE TRANSFERED FROM THE CUSTODY OF THE COMPETENT DIVISION OF R&D DEPARTMENT EXCEPT AS AUTHORIZED BY COMPAL ELECTRONICS, INC. NEITHER THIS SHEET NOR THE INFORMATION IT CONTAINS MAY BE USED BY OR DISCLOSED TO ANY THIRD PARTY WITHOUT PRIOR WRITTEN CONSENT OF COMPAL ELECTRONICS, INC.

Compal Electronics, Inc.

Title: AR8114

Size: Custom | Document Number: KAV60 LA-5141P | Rev: 0.2

Date: Sunday, February 22, 2009 | Sheet 24 of 40

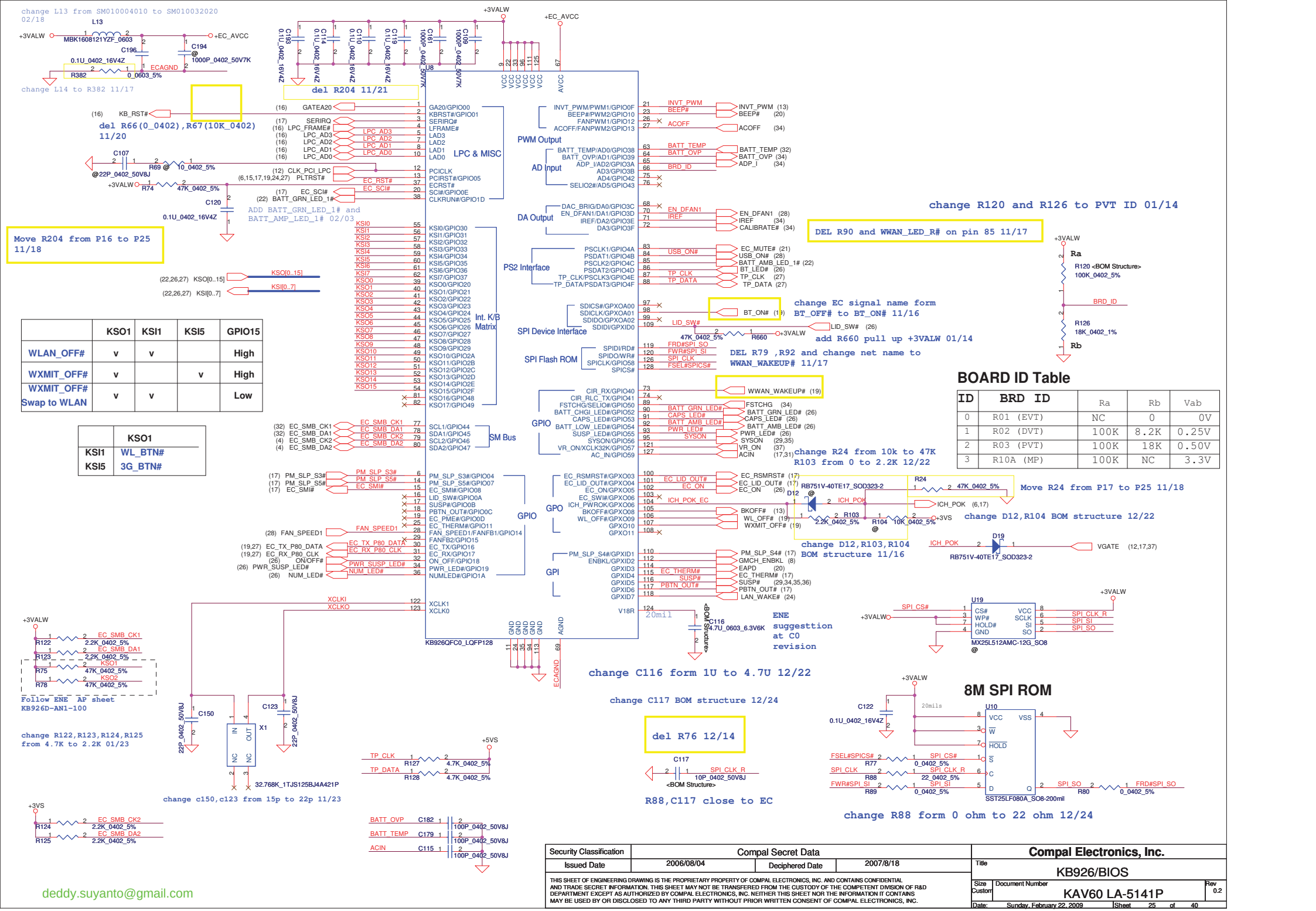

	KSO1	KSI1	KSI5	GPIO15
WLAN_OFF#	v	v		High
WXMIT_OFF#	v		v	High
WXMIT_OFF# Swap to WLAN	v	v		Low

	KSO1
KSI1	WL_BTN#
KSI5	3G_BTN#

BOARD ID Table

ID	BRD ID	Ra	Rb	Vab
0	R01 (EVT)	NC	0	0V
1	R02 (DVT)	100K	8.2K	0.25V
2	R03 (PVT)	100K	18K	0.50V
3	R10A (MP)	100K	NC	3.3V

Security Classification	Compal Secret Data		
Issued Date	2006/08/04	Deciphered Date	2007/8/18

THIS SHEET OF ENGINEERING DRAWING IS THE PROPRIETARY PROPERTY OF COMPAL ELECTRONICS, INC. AND CONTAINS CONFIDENTIAL AND TRADE SECRET INFORMATION. THIS SHEET MAY NOT BE TRANSFERED FROM THE CUSTODY OF THE COMPETENT DIVISION OF R&D DEPARTMENT EXCEPT AS AUTHORIZED BY COMPAL ELECTRONICS, INC. NEITHER THIS SHEET NOR THE INFORMATION IT CONTAINS MAY BE USED BY OR DISCLOSED TO ANY THIRD PARTY WITHOUT PRIOR WRITTEN CONSENT OF COMPAL ELECTRONICS, INC.

Compal Electronics, Inc.

Title: KB926/BIOS

Size: Custom | Document Number: KAV60 LA-5141P | Rev: 0.2

Date: Sunday, February 22, 2009 | Sheet 25 of 40

deddy.suyanto@gmail.com

ON/OFF switch

change J1,J3(43 x 79) to
R186,R193(0_0805) 11/16

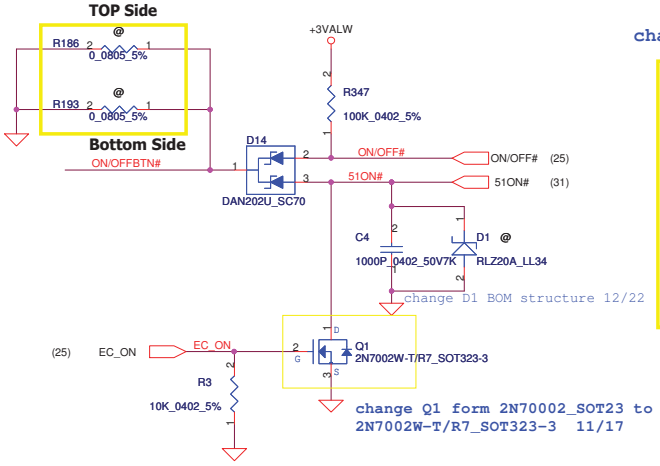

change D1 BOM structure 12/22

change Q1 form 2N70002_SOT23 to
2N7002W-T/R7_SOT323-3 11/17

change JP2 Conn 12/01

change JP2 Conn 11/25

To PWR/B Conn.

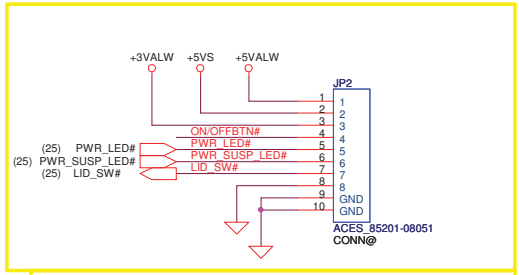

change JP2 from 6 pin to 8 pin 11/21

Change PWR_LED and PWR_SUSP_LED
Net name 01/13

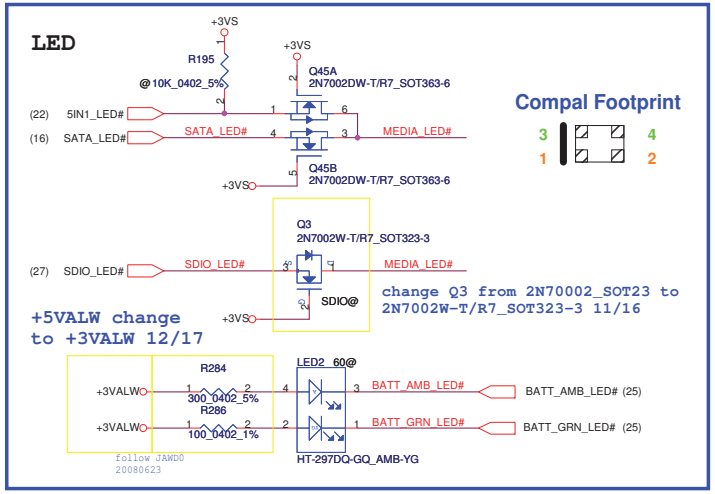

change Q3 from 2N70002_SOT23 to
2N7002W-T/R7_SOT323-3 11/16

change R284 from 150 ohm to 300 ohm
R286 from 120 ohm to 100 ohm 01/23

LED2
HT-297DQ-GQ_AMB-YG
80@

change LED2 BOM
structure 02/18

change R518 from 300 to 422 ohm 02/06

Bluetooth LED

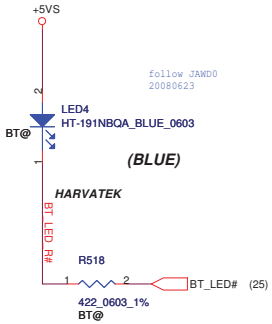

MEDIA_LED

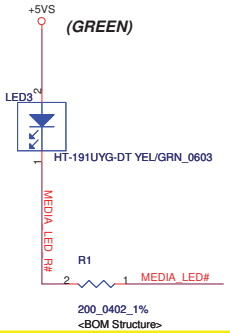

NUM_LED

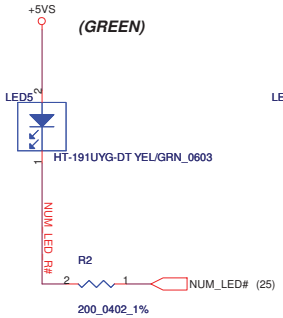

CAPS_LED

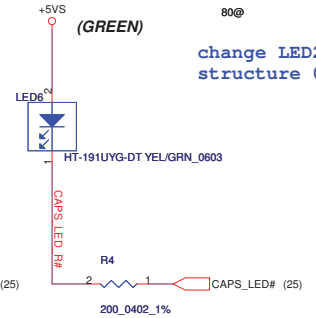

R2,R4,R518 close to EC 12/03

R1 close to Q3 12/03

change R1,R2,R4 from 300 to 200 ohm 02/06

DEL LID Switch 11/21

	KSO1
KSI2	BT_BTN#

Change SW4 P/N to SN111005800 01/13

Bluetooth Button

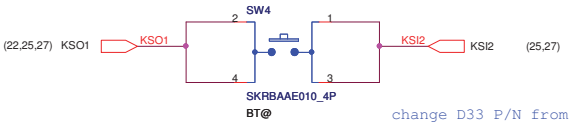

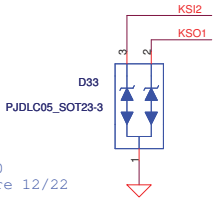

change D33 P/N from SC10T24C000
to SCA00000A00 and BOM structure 12/22

deddy.suyanto@gmail.com

Security Classification	Compal Secret Data		
Issued Date	2006/08/18	Deciphered Date	2007/8/18

THIS SHEET OF ENGINEERING DRAWING IS THE PROPRIETARY PROPERTY OF COMPAL ELECTRONICS, INC. AND CONTAINS CONFIDENTIAL AND TRADE SECRET INFORMATION. THIS SHEET MAY NOT BE TRANSFERED FROM THE CUSTODY OF THE COMPETENT DIVISION OF R&D DEPARTMENT EXCEPT AS AUTHORIZED BY COMPAL ELECTRONICS, INC. NEITHER THIS SHEET NOR THE INFORMATION IT CONTAINS MAY BE USED BY OR DISCLOSED TO ANY THIRD PARTY WITHOUT PRIOR WRITTEN CONSENT OF COMPAL ELECTRONICS, INC.

Compal Electronics, Inc.

Title: LID SW/LED/CMOS

Size: B | Document Number: KAV60 LA-5141P | Rev: 0.2

Date: Sunday, February 22, 2009 | Sheet 26 of 40

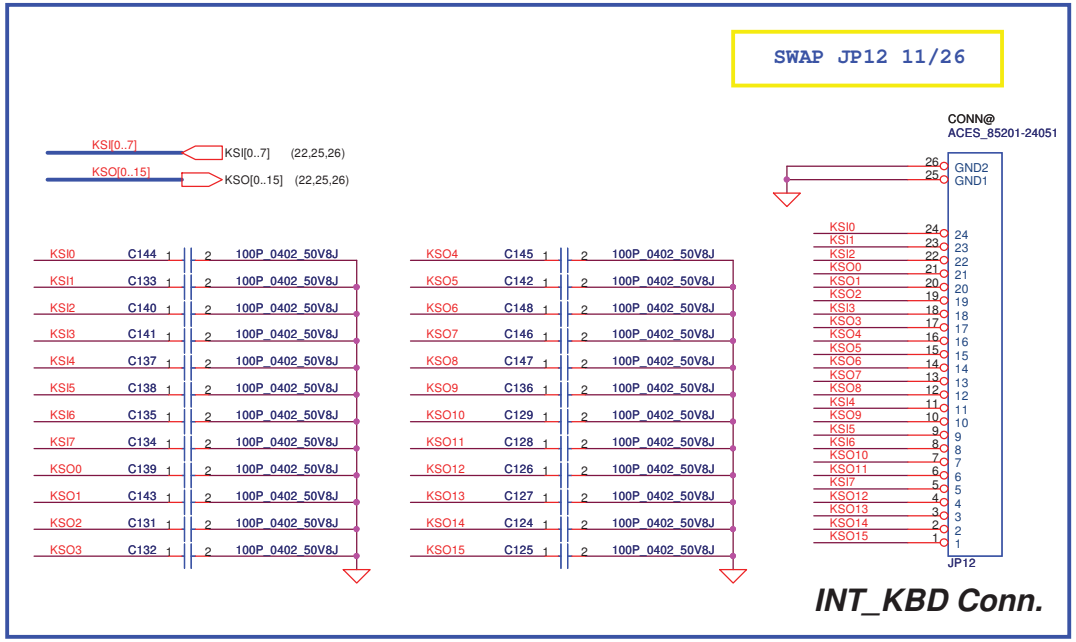

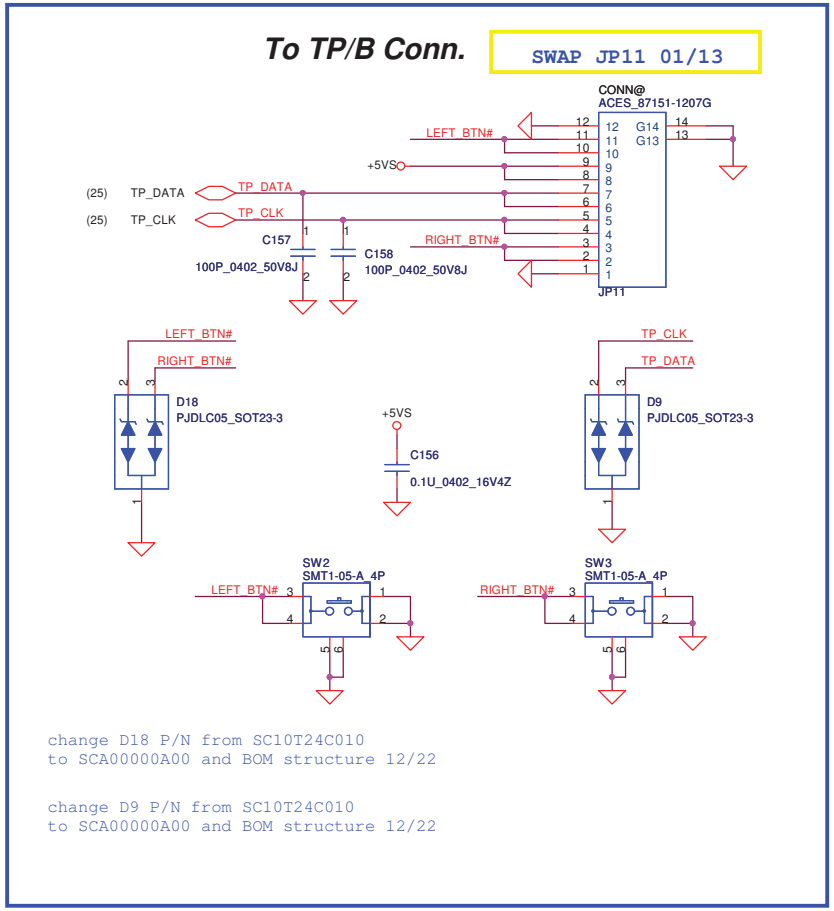

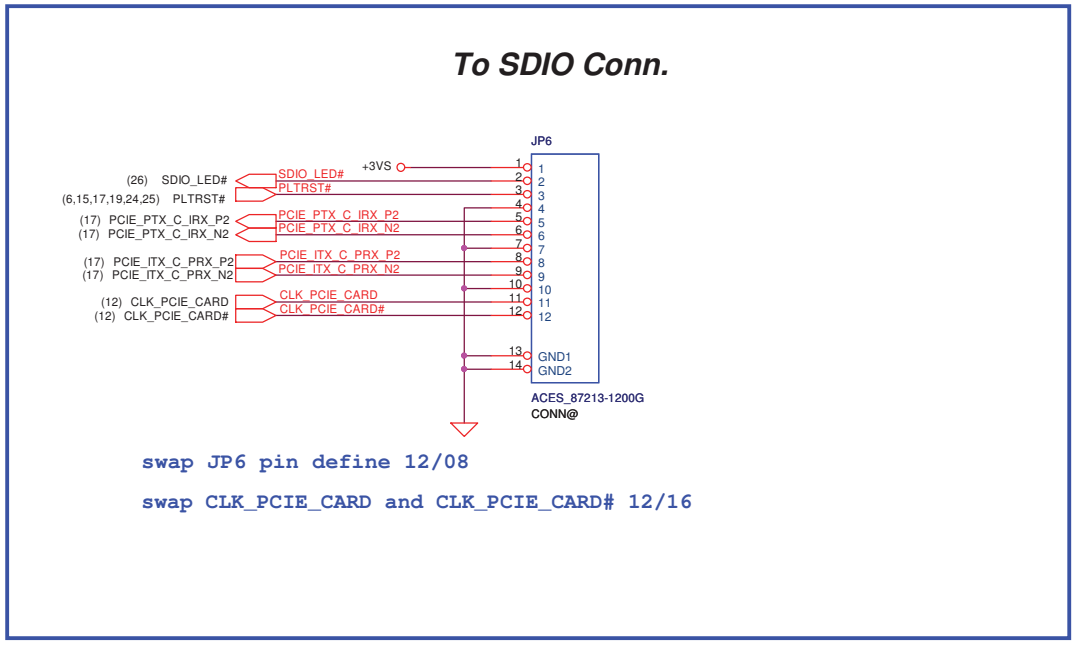

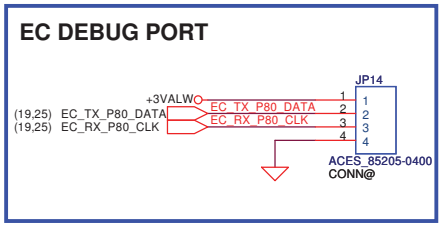

Security Classification	Compal Secret Data		
Issued Date	2006/08/18	Deciphered Date	2007/8/18

THIS SHEET OF ENGINEERING DRAWING IS THE PROPRIETARY PROPERTY OF COMPAL ELECTRONICS, INC. AND CONTAINS CONFIDENTIAL AND TRADE SECRET INFORMATION. THIS SHEET MAY NOT BE TRANSFERED FROM THE CUSTODY OF THE COMPETENT DIVISION OF R&D DEPARTMENT EXCEPT AS AUTHORIZED BY COMPAL ELECTRONICS, INC. NEITHER THIS SHEET NOR THE INFORMATION IT CONTAINS MAY BE USED BY OR DISCLOSED TO ANY THIRD PARTY WITHOUT PRIOR WRITTEN CONSENT OF COMPAL ELECTRONICS, INC.

Compal Electronics, Inc.

Title: KB/SDIO/TP/LPC Debug CONN

Size: B | Document Number: KAV60 LA-5141P | Rev: 0.2

Date: Sunday, February 22, 2009 | Sheet 27 of 40

deddy.suyanto@gmail.com

U2 Change to SA000033H00
12/24

Change to SA00002XX00
20080916

Change R130 from 200K to 100K
and change BOM structure 12/29

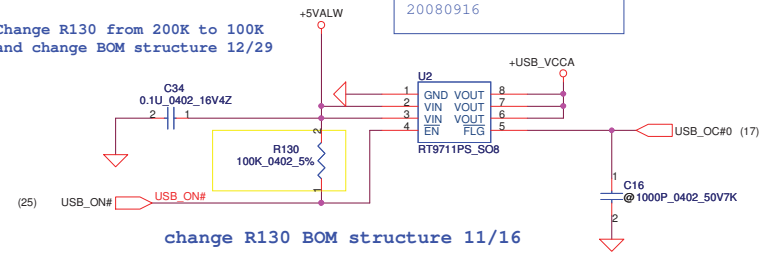

change R130 BOM structure 11/16

USB CONN. 1

W=80mils

change JUSB1 Conn 12/08

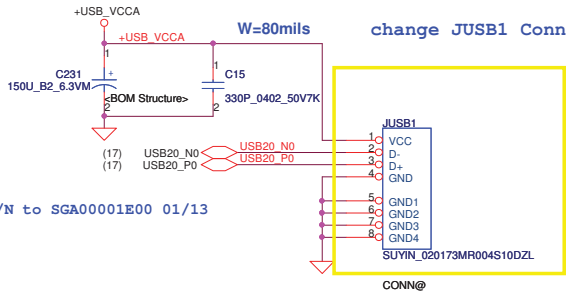

Change C231 P/N to SGA00001E00 01/13

change D29 P/N from SC300000000
to SC300000B00 and BOM structure 12/22

SWAP D29 Pin Define 12/10

del D29 ,L9,R144,R136 01/16

U3 Change to SA000035G00
12/31

Change U3 from SA000035G00
to SA000022J00 02/06

change D5 BOM
structure 01/23

del D8 and change
D5 P/N 12/05

FAN1 Conn

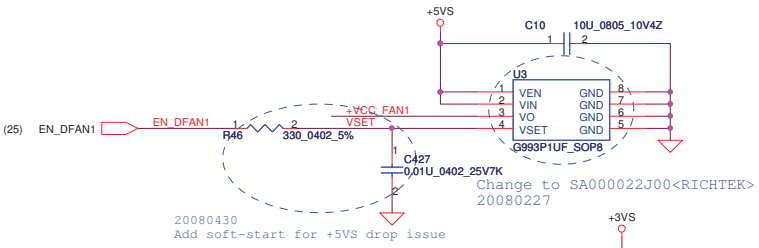

Change to SA000022J00<RICHTEK>
20080227

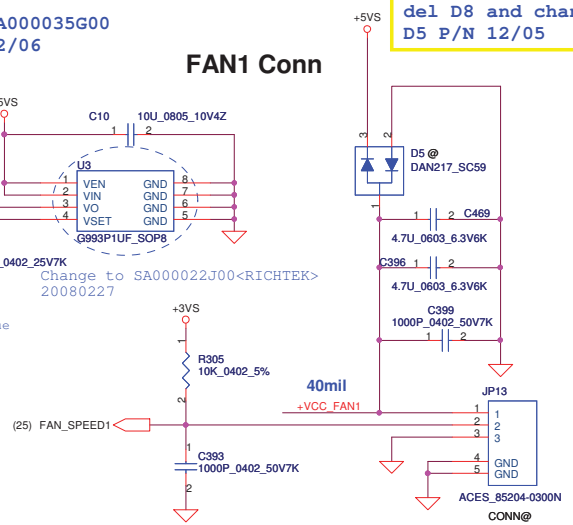

change JP13 Conn 11/25

change C396 from 10U/0806 to 4.7U/0603 01/22
add C469 01/22

del JP3 11/26

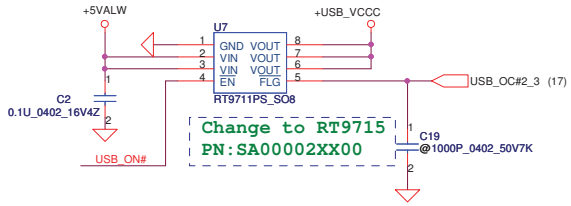

add U7 11/26

U7 Change to SA000033H00
12/24

deddy.suyanto@gmail.com

Security Classification	Compal Secret Data		
Issued Date	2006/08/18	Deciphered Date	2007/8/18

THIS SHEET OF ENGINEERING DRAWING IS THE PROPRIETARY PROPERTY OF COMPAL ELECTRONICS, INC. AND CONTAINS CONFIDENTIAL AND TRADE SECRET INFORMATION. THIS SHEET MAY NOT BE TRANSFERED FROM THE CUSTODY OF THE COMPETENT DIVISION OF R&D DEPARTMENT EXCEPT AS AUTHORIZED BY COMPAL ELECTRONICS, INC. NEITHER THIS SHEET NOR THE INFORMATION IT CONTAINS MAY BE USED BY OR DISCLOSED TO ANY THIRD PARTY WITHOUT PRIOR WRITTEN CONSENT OF COMPAL ELECTRONICS, INC.

Compal Electronics, Inc.

Title: USB PORTS/FAN

Size: B | Document Number: KAV60 LA-5141P | Rev: 0.2

Date: Sunday, February 22, 2009 | Sheet 28 of 40

+5VALW TO +5VS

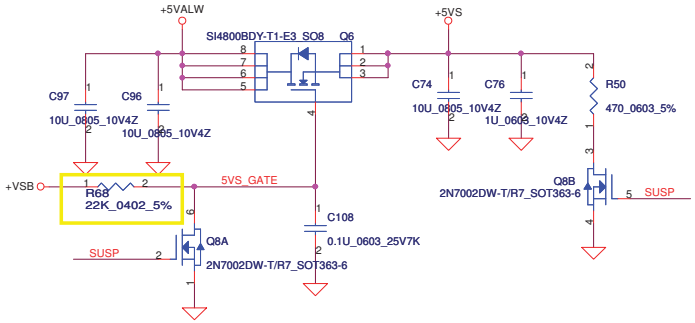

change R68 from 200K to 22K 12/10

+3VALW TO +3VS

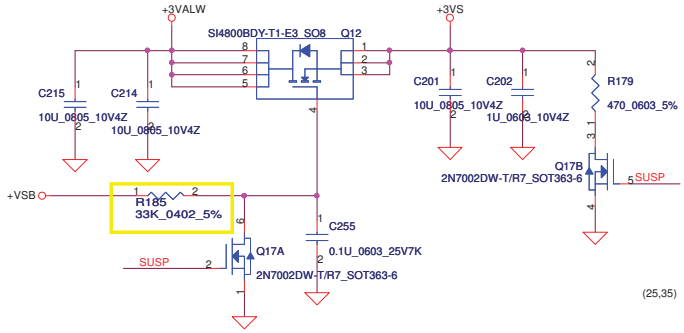

change R185 from 200K to 33K 12/10

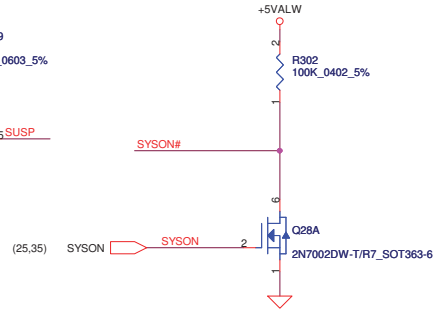

+5VALW CHANG TO VL
11/16

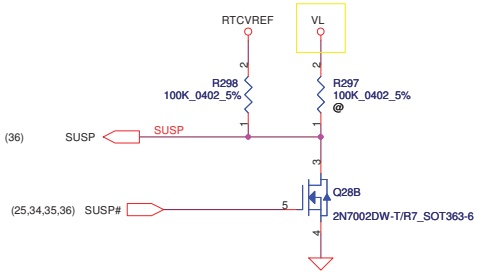

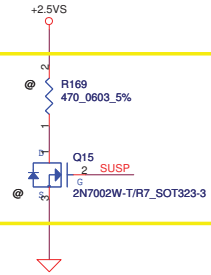

del +1.5VS,+VCCP,+0.9VS,+1.8V Discharge pathR18,R280,R61,R279 Q2,Q24,Q7,Q23 11/17

change Q2,Q15,Q24,Q7,Q23 form 2N70002_SOT23 to 2N7002W-T/R7_SOT323-3 11/17

change R18,R169,R280,R61,R279 Q2,Q15,Q24,Q7,Q7,Q23 BOM structure 11/16

deddy.suyanto@gmail.com

Security Classification	Compal Secret Data		
Issued Date	2006/08/18	Deciphered Date	2007/8/18

THIS SHEET OF ENGINEERING DRAWING IS THE PROPRIETARY PROPERTY OF COMPAL ELECTRONICS, INC. AND CONTAINS CONFIDENTIAL AND TRADE SECRET INFORMATION. THIS SHEET MAY NOT BE TRANSFERED FROM THE CUSTODY OF THE COMPETENT DIVISION OF R&D DEPARTMENT EXCEPT AS AUTHORIZED BY COMPAL ELECTRONICS, INC. NEITHER THIS SHEET NOR THE INFORMATION IT CONTAINS MAY BE USED BY OR DISCLOSED TO ANY THIRD PARTY WITHOUT PRIOR WRITTEN CONSENT OF COMPAL ELECTRONICS, INC.

Compal Electronics, Inc.

Title: DC INTERFACE

Size: B | Document Number: KAV60 LA-5141P | Rev: 0.2

Date: Sunday, February 22, 2009 | Sheet 29 of 40

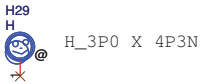

update Screw 12/04

del H11 H_3P0N 12/10

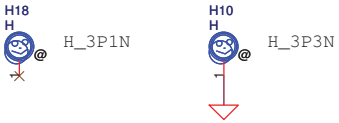

change H18 from 3P2N to 3P1N 02/22

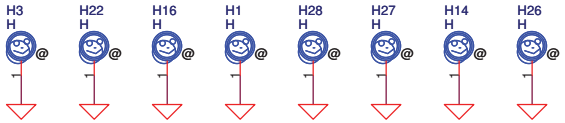

del H31 01/16

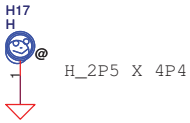

change H17 from H_2P5 to H_2P5 X 4P4

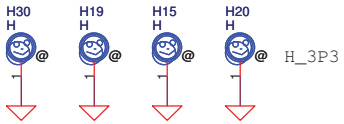

add H32 12/17

modify H15,H19,H20,H29,H30 12/17

update H15,H19,H20,H30 from 3P8 to 3P6 01/22

update H15,H19,H20,H30 from 3P6 to 3P3 02/22

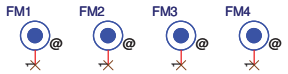

Security Classification	Compal Secret Data		
Issued Date	2006/08/18	Deciphered Date	2007/8/18

THIS SHEET OF ENGINEERING DRAWING IS THE PROPRIETARY PROPERTY OF COMPAL ELECTRONICS, INC. AND CONTAINS CONFIDENTIAL AND TRADE SECRET INFORMATION. THIS SHEET MAY NOT BE TRANSFERED FROM THE CUSTODY OF THE COMPETENT DIVISION OF R&D DEPARTMENT EXCEPT AS AUTHORIZED BY COMPAL ELECTRONICS, INC. NEITHER THIS SHEET NOR THE INFORMATION IT CONTAINS MAY BE USED BY OR DISCLOSED TO ANY THIRD PARTY WITHOUT PRIOR WRITTEN CONSENT OF COMPAL ELECTRONICS, INC.

Compal Electronics, Inc.

Title: Screw

Size: B | Document Number: KAV60 LA-5141P | Rev: 0.2

Date: Sunday, February 22, 2009 | Sheet 30 of 40

deddy.suyanto@gmail.com

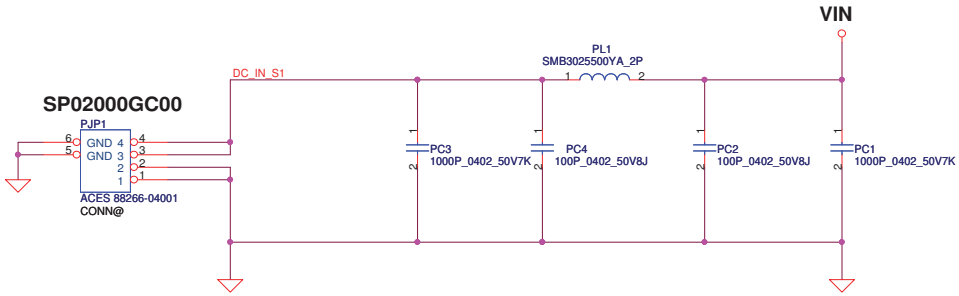

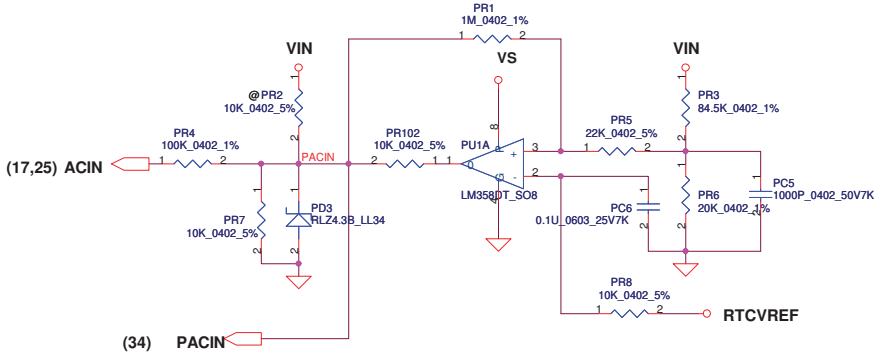

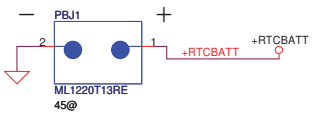

Vin Dectector			
	Min.	Typ	Max.
H-->L	16.976V	17.525V	17.728V
L-->H	17.430V	17.901V	18.384V

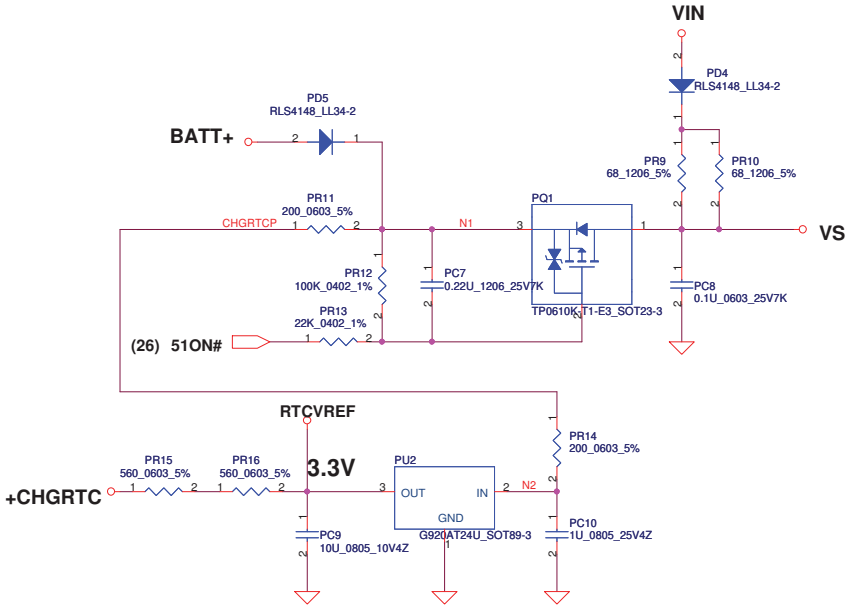

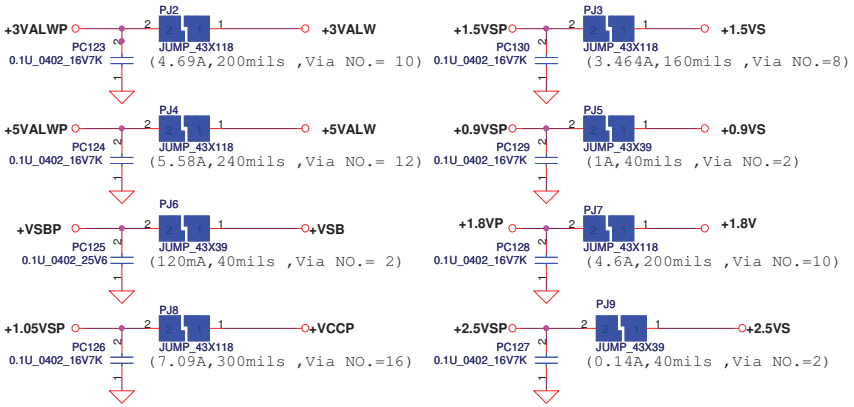

deddy.suyanto@gmail.com

Security Classification	Compal Secret Data		
Issued Date	2007/09/20	Deciphered Date	2008/09/20

THIS SHEET OF ENGINEERING DRAWING IS THE PROPRIETARY PROPERTY OF COMPAL ELECTRONICS, INC. AND CONTAINS CONFIDENTIAL AND TRADE SECRET INFORMATION. THIS SHEET MAY NOT BE TRANSFERED FROM THE CUSTODY OF THE COMPETENT DIVISION OF R&D DEPARTMENT EXCEPT AS AUTHORIZED BY COMPAL ELECTRONICS, INC. NEITHER THIS SHEET NOR THE INFORMATION IT CONTAINS MAY BE USED BY OR DISCLOSED TO ANY THIRD PARTY WITHOUT PRIOR WRITTEN CONSENT OF COMPAL ELECTRONICS, INC.

Compal Electronics, Inc.

Title: DCIN & DETECTOR

Size: Custom | Document Number: KAV60 | Rev: 0.1

Date: Sunday, February 22, 2009 | Sheet 31 of 40

PH1 under CPU botten side :
CPU thermal protection at 92 degree C
Recovery at 56 degree C

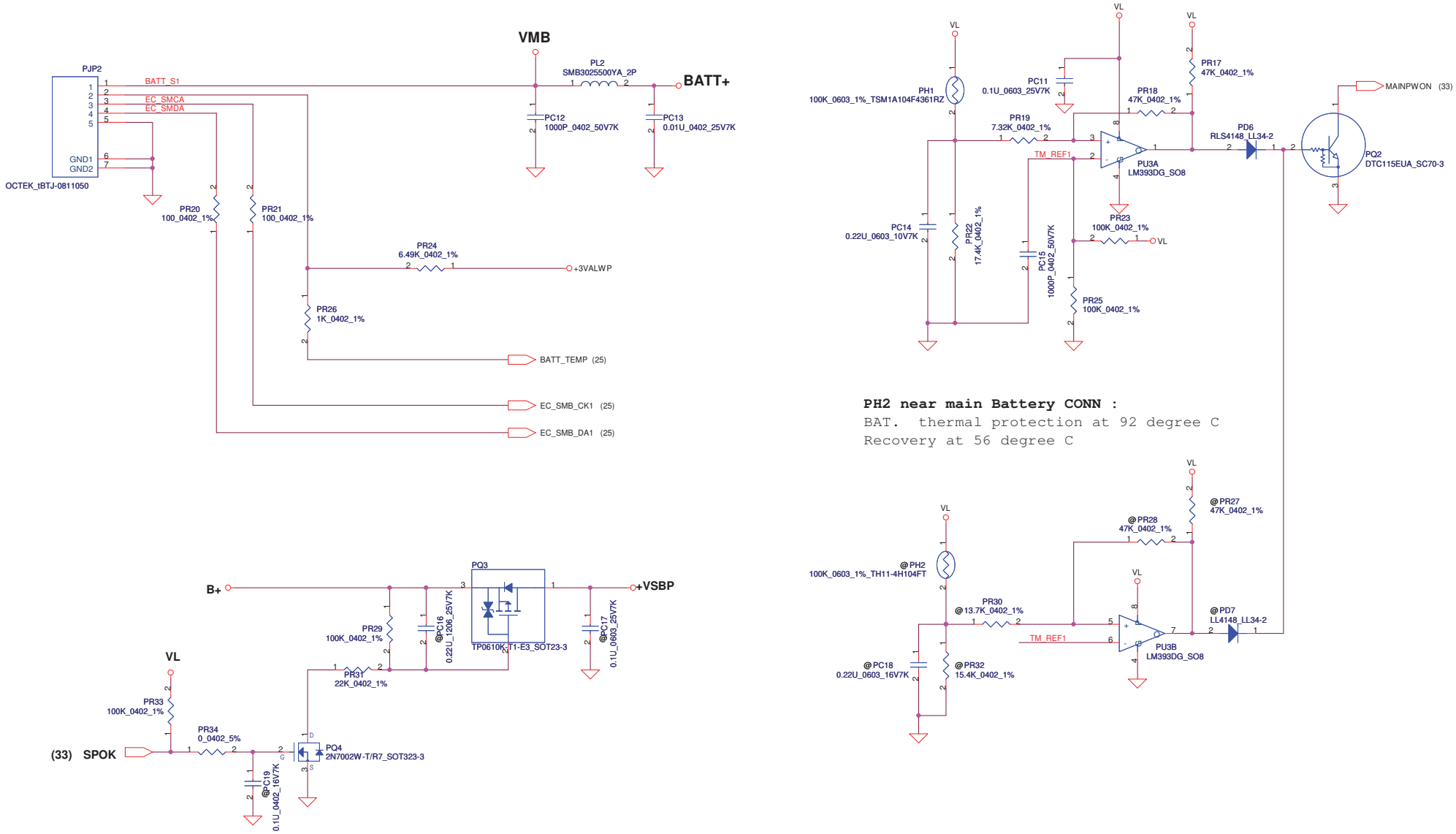

PH2 near main Battery CONN :
BAT. thermal protection at 92 degree C
Recovery at 56 degree C

Security Classification	Compal Secret Data		
Issued Date	2007/09/20	Deciphered Date	2008/09/20

THIS SHEET OF ENGINEERING DRAWING IS THE PROPRIETARY PROPERTY OF COMPAL ELECTRONICS, INC. AND CONTAINS CONFIDENTIAL AND TRADE SECRET INFORMATION. THIS SHEET MAY NOT BE TRANSFERED FROM THE CUSTODY OF THE COMPETENT DIVISION OF R&D DEPARTMENT EXCEPT AS AUTHORIZED BY COMPAL ELECTRONICS, INC. NEITHER THIS SHEET NOR THE INFORMATION IT CONTAINS MAY BE USED BY OR DISCLOSED TO ANY THIRD PARTY WITHOUT PRIOR WRITTEN CONSENT OF COMPAL ELECTRONICS, INC.

Compal Electronics, Inc.

Title: BATTERY CONN / OTP

Size: Custom | Document Number: KAV60 | Rev: 0.1

Date: Sunday, February 22, 2009 | Sheet 32 of 40

deddy.suyanto@gmail.com

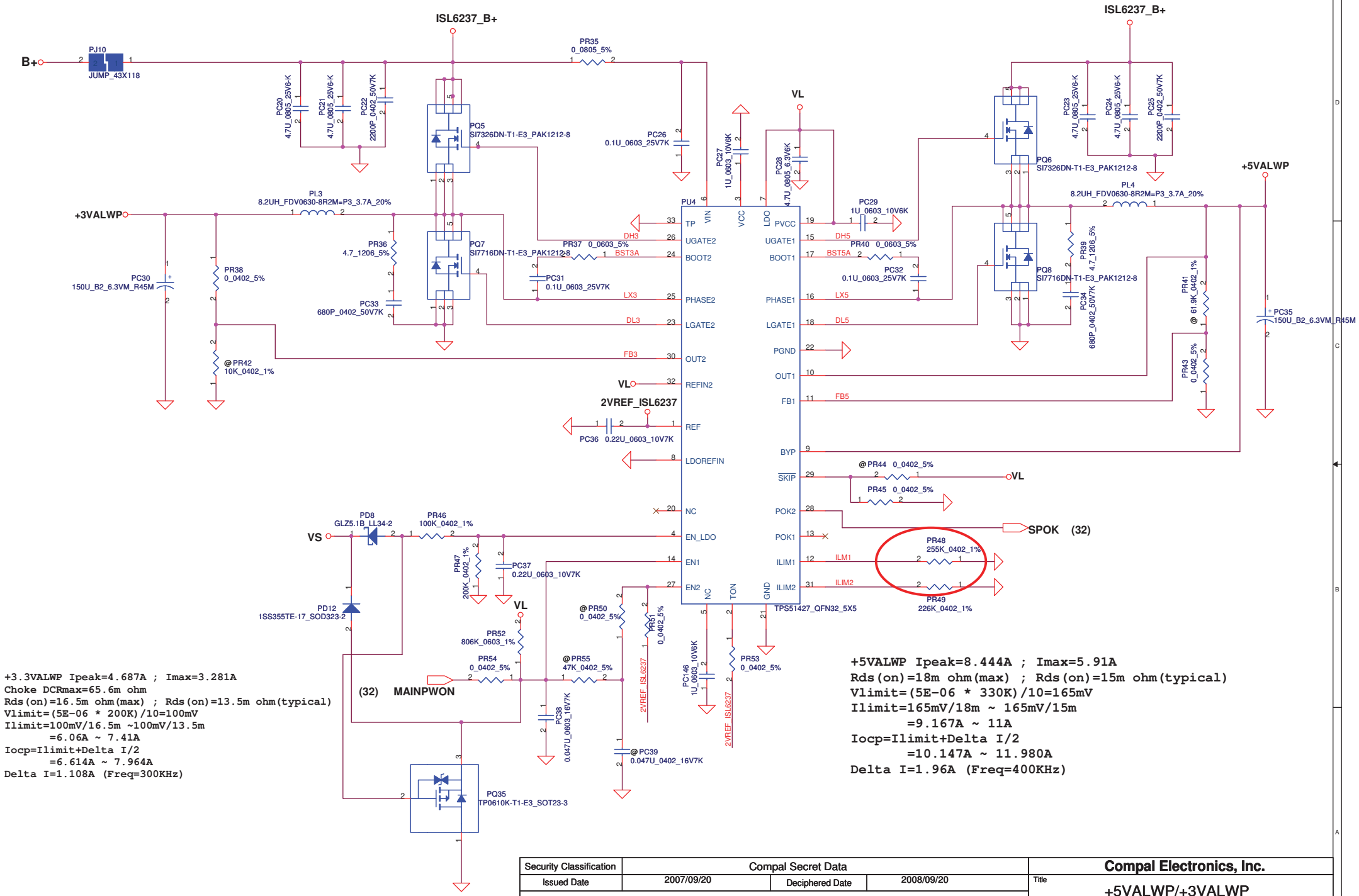

Security Classification	Compal Secret Data		
Issued Date	2007/09/20	Deciphered Date	2008/09/20

THIS SHEET OF ENGINEERING DRAWING IS THE PROPRIETARY PROPERTY OF COMPAL ELECTRONICS, INC. AND CONTAINS CONFIDENTIAL AND TRADE SECRET INFORMATION. THIS SHEET MAY NOT BE TRANSFERED FROM THE CUSTODY OF THE COMPETENT DIVISION OF R&D DEPARTMENT EXCEPT AS AUTHORIZED BY COMPAL ELECTRONICS, INC. NEITHER THIS SHEET NOR THE INFORMATION IT CONTAINS MAY BE USED BY OR DISCLOSED TO ANY THIRD PARTY WITHOUT PRIOR WRITTEN CONSENT OF COMPAL ELECTRONICS, INC.

Compal Electronics, Inc.

Title: +5VALWP/+3VALWP

Size: Custom | Document Number: KAV60 | Rev: 0.1

Date: Sunday, February 22, 2009 | Sheet 33 of 40

deddy.suyanto@gmail.com

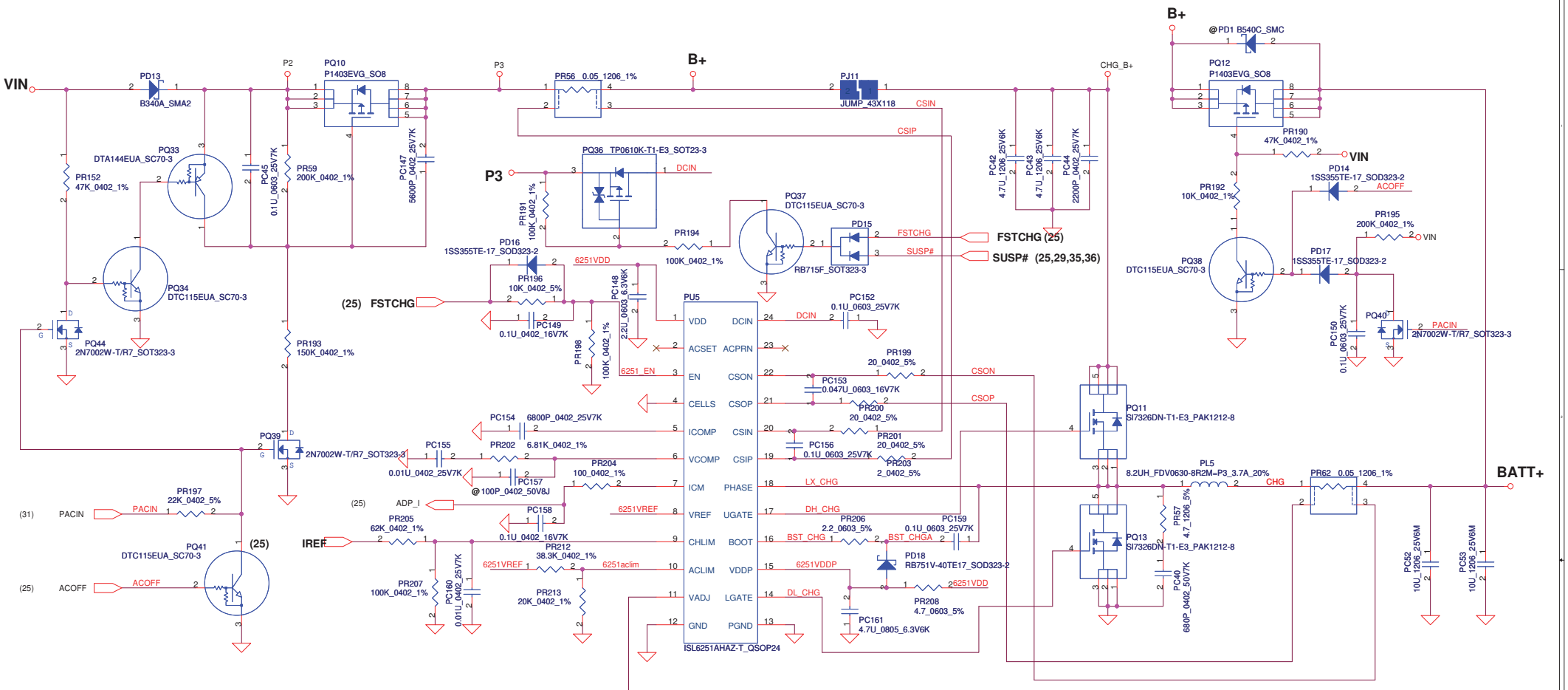

Iada=0~1.58A(30W) CP = 85%*Iada ; CP = 1.343A

CP mode
Vaclim=2.39*(20K/(20K+38.3K))=0.8199V

Iinput=(1/0.05)((0.05*Vaclm)/2.39+0.05)
where Vaclm=0.8199V, Iinput=1.343A

CC=0.3~1.76A
IREF=1.62*Icharge
IREF=0.486V~2.85V
3.24V==>2A

BATT Type	Charging Voltage (0x15)	CV mode
Normal 3S LI-ON Cells	12600mV	12.60V

CALIBRATE#	Pre Cell
H	4.35V
L	3.99V

LI-3S :13.5V----BATT-OVP=1.5012V
BATT-OVP=0.1112*VMB
Per cell=3.5V

VADJ-->VREF-->4.41V
VADJ--->Ground--->3.39V
Vcell=(0.175*VADJ+3.99)

Charger ADJ	Calibrate#	PR211	PR220
4.2V	N/A	@	@
3.99V	L	301K	499K
4.35V	H	301K	499K

deddy.suyanto@gmail.com

Security Classification	Compal Secret Data		
Issued Date	2007/09/20	Deciphered Date	2008/09/20

THIS SHEET OF ENGINEERING DRAWING IS THE PROPRIETARY PROPERTY OF COMPAL ELECTRONICS, INC. AND CONTAINS CONFIDENTIAL AND TRADE SECRET INFORMATION. THIS SHEET MAY NOT BE TRANSFERED FROM THE CUSTODY OF THE COMPETENT DIVISION OF R&D DEPARTMENT EXCEPT AS AUTHORIZED BY COMPAL ELECTRONICS, INC. NEITHER THIS SHEET NOR THE INFORMATION IT CONTAINS MAY BE USED BY OR DISCLOSED TO ANY THIRD PARTY WITHOUT PRIOR WRITTEN CONSENT OF COMPAL ELECTRONICS, INC.

Compal Electronics, Inc.

Title: CHARGER

Size: Custom | Document Number: KAV60 | Rev: 0.1

Date: Sunday, February 22, 2009 | Sheet 34 of 40

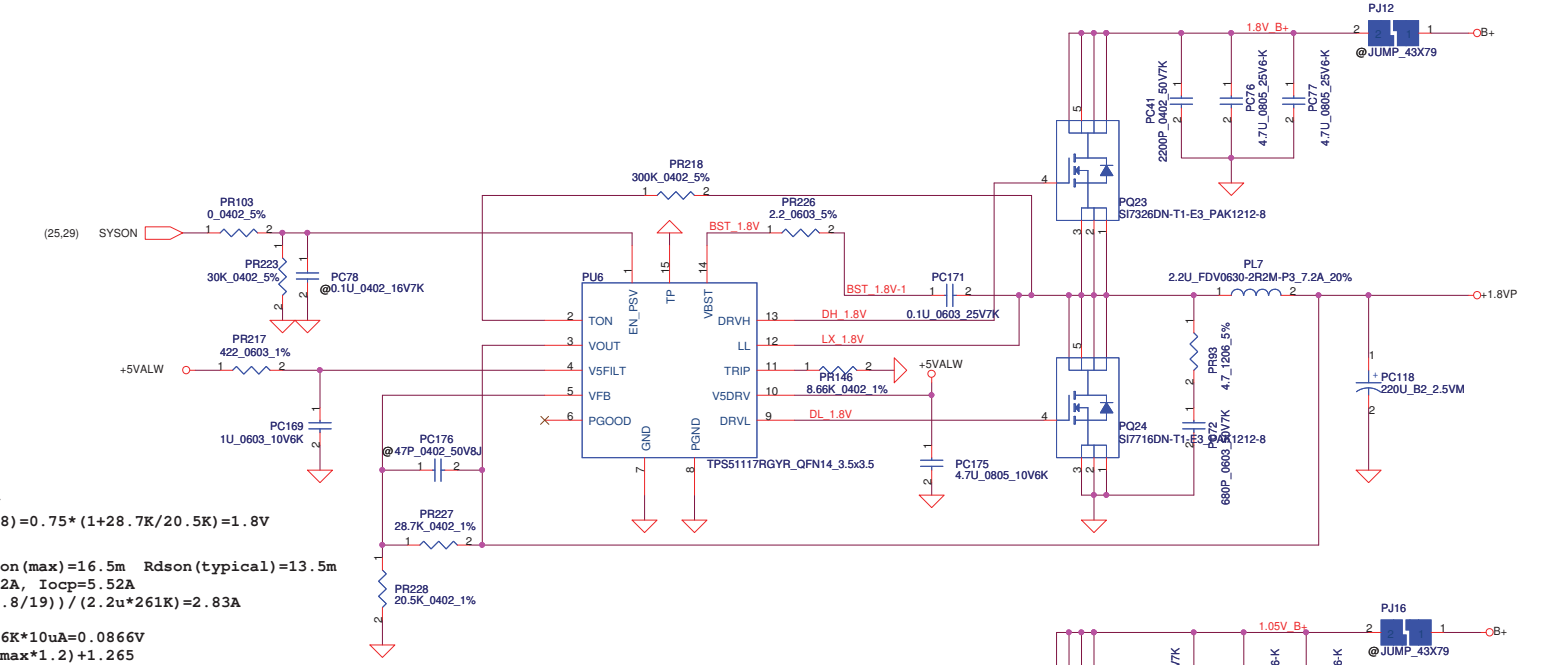

<Vo=1.8V> VFB=0.75V
Vo=VFB*(1+PR227/PR228)=0.75*(1+28.7K/20.5K)=1.8V
Fsw=262KHz

Cout ESR=15m ohm Rdson(max)=16.5m Rdson(typical)=13.5m
Ipeak=4.6A, Imax=3.22A, Iocp=5.52A
Delta I=((19-1.8)*(1.8/19))/(2.2u*261K)=2.83A
=>1/2DeltaI=1.42A
Vtrip=Rtrip*10uA=8.66K*10uA=0.0866V
Iocpmin=Vtrip/(Rdsonmax*1.2)+1.265
=0.0866/(0.0165*1.2)+1.42=5.79A
Iocpmax=(0.0866/(0.0135*1.2))+1.42A=6.77A
Iocp=5.79A~6.77A

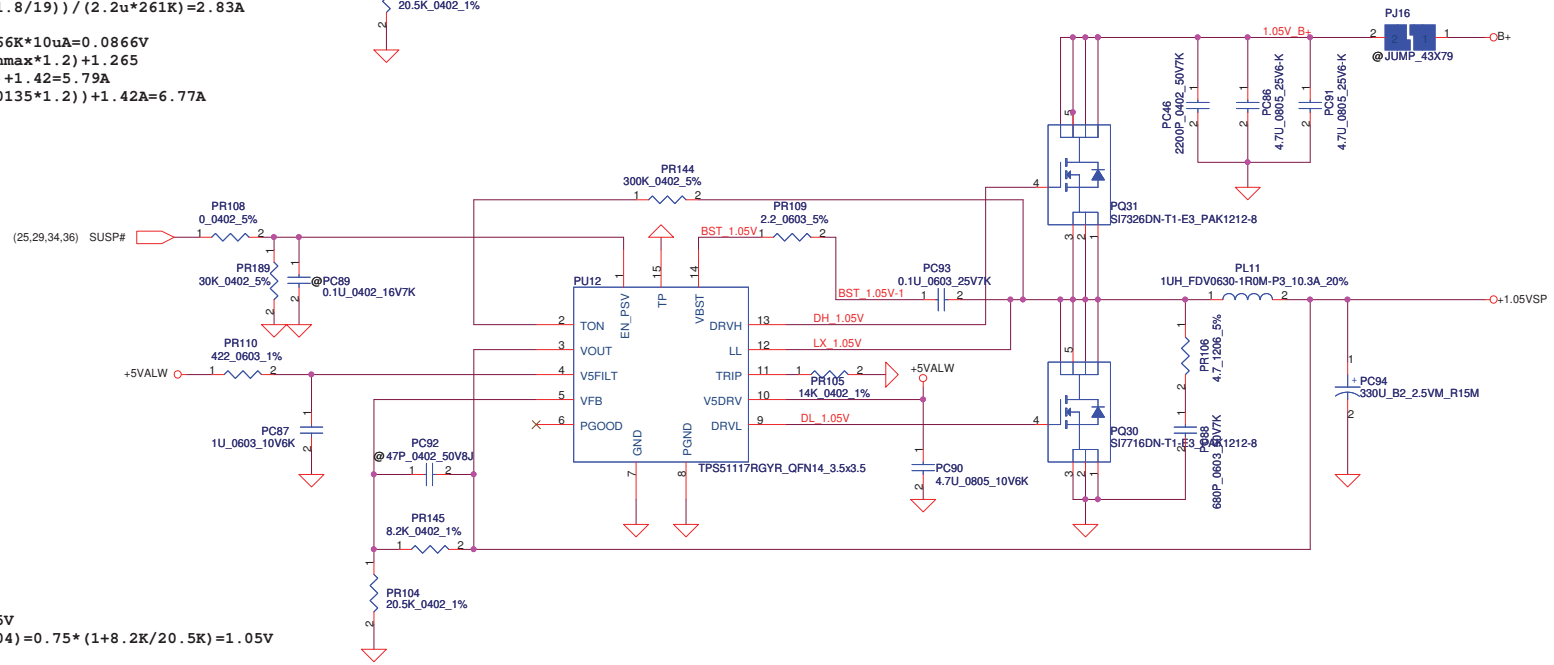

<Vo=1.05V> VFB=0.75V
Vo=VFB*(1+PR145/PR104)=0.75*(1+8.2K/20.5K)=1.05V
Fsw=261KHz

Cout ESR=15m ohm Rdson(max)=16.5m Rdson(typical)=13.5m
Ipeak=7.09A, Imax=4.963A, Iocp=8.51A
Delta I=((19-1.05)*(1.05/19))/(1.5u*261K)=2.53A
=>1/2DeltaI=1.265A
Vtrip=Rtrip*10uA=14K*10uA=0.14V
Iocpmin=Vtrip/(Rdsonmax*1.2)+1.265
=0.14/(0.0165*1.2)+1.265=8.34A
Iocpmax=(0.14/(0.0135*1.2))+1.265A=9.91A
Iocp=8.34A~9.91A

deddy.suyanto@gmail.com

Security Classification	Compal Secret Data		
Issued Date	2007/09/20	Deciphered Date	2008/09/20

THIS SHEET OF ENGINEERING DRAWING IS THE PROPRIETARY PROPERTY OF COMPAL ELECTRONICS, INC. AND CONTAINS CONFIDENTIAL AND TRADE SECRET INFORMATION. THIS SHEET MAY NOT BE TRANSFERED FROM THE CUSTODY OF THE COMPETENT DIVISION OF R&D DEPARTMENT EXCEPT AS AUTHORIZED BY COMPAL ELECTRONICS, INC. NEITHER THIS SHEET NOR THE INFORMATION IT CONTAINS MAY BE USED BY OR DISCLOSED TO ANY THIRD PARTY WITHOUT PRIOR WRITTEN CONSENT OF COMPAL ELECTRONICS, INC.

Compal Electronics, Inc.

Title: 1.8VP / 1.05VSP

Size: Custom | Document Number: KAV60 | Rev: 0.1

Date: Sunday, February 22, 2009 | Sheet 35 of 40

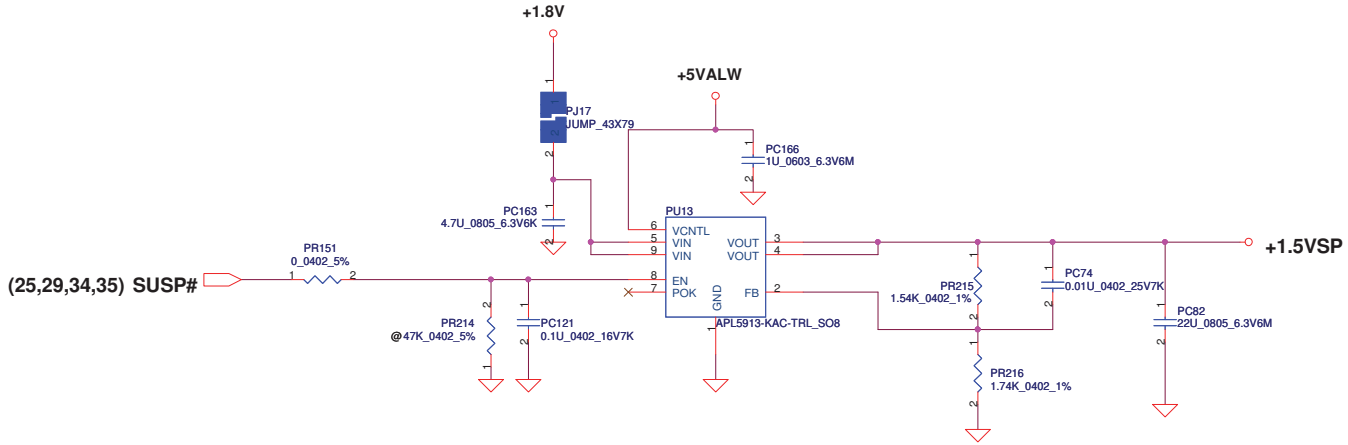

Ipeak=3.464A, Imax=2.425A

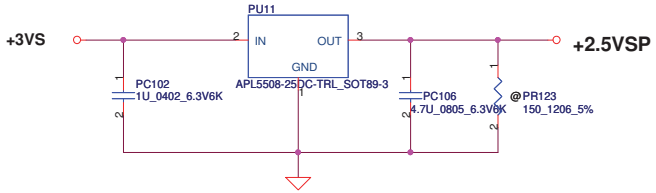

Ipeak=0.14A, Imax=0.098A

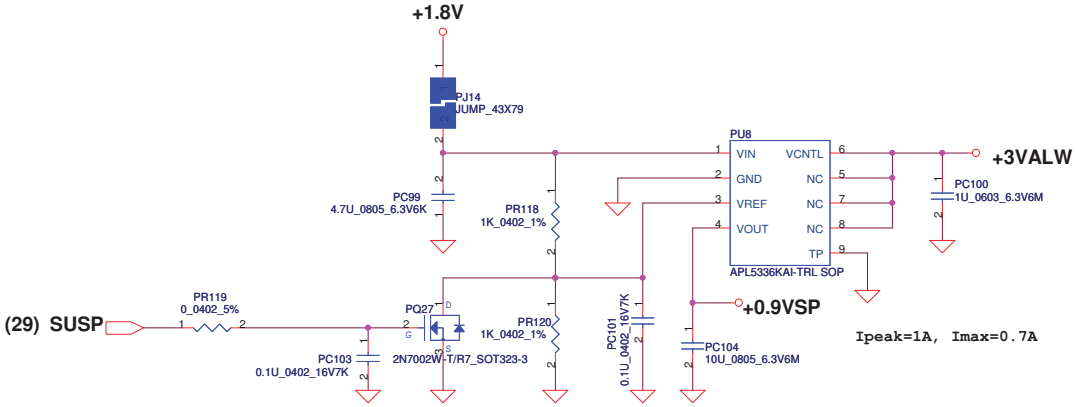

Ipeak=1A, Imax=0.7A

Security Classification	Compal Secret Data			Compal Electronics, Inc.
Issued Date	2007/09/20	Deciphered Date	2008/09/20	Title: +0.9VSP/+2.5VSP
				Size: Custom; Document Number: KAV60; Rev: 0.1
				Date: Sunday, February 22, 2009; Sheet 36 of 40

THIS SHEET OF ENGINEERING DRAWING IS THE PROPRIETARY PROPERTY OF COMPAL ELECTRONICS, INC. AND CONTAINS CONFIDENTIAL AND TRADE SECRET INFORMATION. THIS SHEET MAY NOT BE TRANSFERED FROM THE CUSTODY OF THE COMPETENT DIVISION OF R&D DEPARTMENT EXCEPT AS AUTHORIZED BY COMPAL ELECTRONICS, INC. NEITHER THIS SHEET NOR THE INFORMATION IT CONTAINS MAY BE USED BY OR DISCLOSED TO ANY THIRD PARTY WITHOUT PRIOR WRITTEN CONSENT OF COMPAL ELECTRONICS, INC.

deddy.suyanto@gmail.com

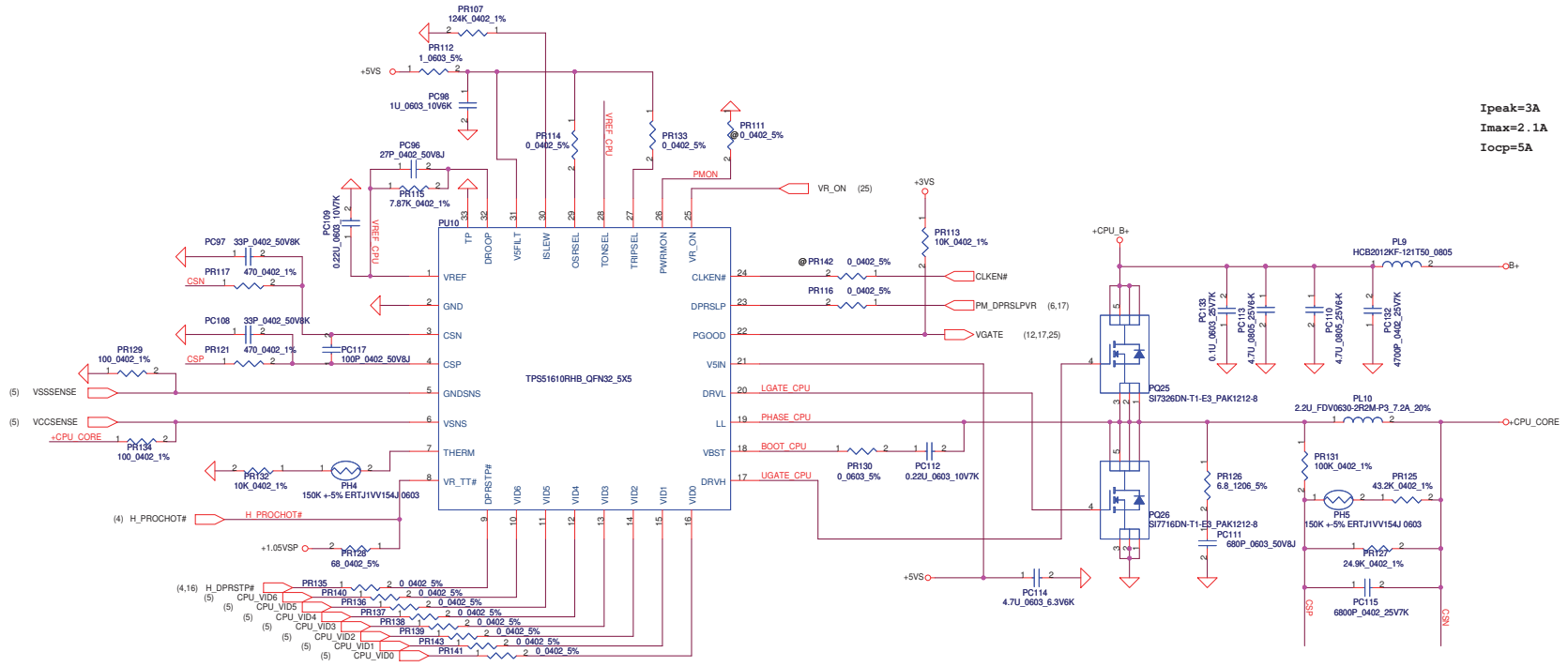

Security Classification	Compal Secret Data			Compal Electronics, Inc.
Issued Date	2007/09/20	Deciphered Date	2008/09/20	Title: +CPU_CORE
				Size: C; Document Number: KAV60; Rev: 0.1
				Date: Sunday, February 22, 2009; Sheet 37 of 40

THIS SHEET OF ENGINEERING DRAWING IS THE PROPRIETARY PROPERTY OF COMPAL ELECTRONICS, INC. AND CONTAINS CONFIDENTIAL AND TRADE SECRET INFORMATION. THIS SHEET MAY NOT BE TRANSFERED FROM THE CUSTODY OF THE COMPETENT DIVISION OF R&D DEPARTMENT EXCEPT AS AUTHORIZED BY COMPAL ELECTRONICS, INC. NEITHER THIS SHEET NOR THE INFORMATION IT CONTAINS MAY BE USED BY OR DISCLOSED TO ANY THIRD PARTY WITHOUT PRIOR WRITTEN CONSENT OF COMPAL ELECTRONICS, INC.

deddy.suyanto@gmail.com

Version change list (P.I.R. List)

Item	Fixed Issue	Reason for change	Rev.	PG#	Modify List	Date	Phase
1	Modify CPU OTP circuit	For thermal team request	0.1	31	Cahnge PR19 to SD034732180 (S RES 1/16W 7.32K +-1% 0402) Cahnge PR22 to SD034174280 (S RES 1/16W 17.4K +-1% 0402)	09/01/14	DVT
2	Modify 3/5V output cap	design change	0.1	32	Cahnge PC30 to SGA00004H00 (S POLY C 150U 6.3V M B2 LESR25M PSL H1.9) Cahnge PC35 to SGA00004H00 (S POLY C 150U 6.3V M B2 LESR25M PSL H1.9)	09/01/14	DVT
3	Modify Charger modify	redulate charger ADJ voltage	0.1	33	add PR211 to SD034301380 (S RES 1/16W 301K +-1% 0402) add PR220 to SD034499380 (S RES 1/16W 499K +-1% 0402)	09/01/14	DVT
4	Modify 1.8v/1.05v boost circuit	for APW7141 issue	0.1	34	Cahnge PR226 to SD013220B80 (S RES 1/10W 2.2 +-5% 0603) Cahnge PR109 to SD013220B80 (S RES 1/10W 2.2 +-5% 0603)	09/01/14	DVT
5	add all sunbber	for 3G and EMI team request	0.1	34	add all sunbber	09/01/14	DVT
6	Modify HMOS and LMOS	for cost down	0.1	34	H-side to SB00000IA00 (S TR SIS412DN-T1-GE3 1N POWERPAK1212-8) L-side to SB00000I400 (S TR IRFH3707TRPBF 1N PQFN)	09/01/14	DVT
7	add input capacitance	for 3G solution	0.1	34	add PC41 PC46 SE074222K80 (S CER CAP 2200P 50V K X7R 0402)	09/01/21	DVT
8	modify 1.05v TRIP R	modify ocp point	0.1	34	modify PR105 to SD034140280 (S RES 1/16W 14K +-1% 0402)	09/02/02	DVT
9	modify 3V/5V OCP point	design change	0.1	34	Cahnge PR48 SD034255380 (S RES 1/16W 255K +-1% 0402)	09/02/02	DVT
10	modify 3V/5V OCP point	design change	0.1	34	Cahnge PR49 SD034226380 (S RES 1/16W 226K +-1% 0402)	09/02/18	PVT
11	modify chager circuit	design change	0.1	34	Add PQ44 SB000006800 S TR 2N7002W T/R7 1N SOT-323	09/02/18	PVT
12	modify chager circuit	design change	0.1	34	Add PQ34 SB301150000 S TR DTC115EUA NPN (UMT3)	09/02/18	PVT
13	modify chager circuit	design change	0.1	34	Add PR152 SD034470280 S RES 1/16W 47K +-1% 0402	09/02/18	PVT
14	modify chager circuit	design change	0.1	34	Add PQ33 SB101440200 S TR DTA144EUA PNP UMT3	09/02/18	PVT
15							
16							
17							
18							
19							
20							
21							
22							
23							

deddy.suyanto@gmail.com

Security Classification	Compal Secret Data		
Issued Date	2007/09/20	Deciphered Date	2008/09/20

THIS SHEET OF ENGINEERING DRAWING IS THE PROPRIETARY PROPERTY OF COMPAL ELECTRONICS, INC. AND CONTAINS CONFIDENTIAL AND TRADE SECRET INFORMATION. THIS SHEET MAY NOT BE TRANSFERED FROM THE CUSTODY OF THE COMPETENT DIVISION OF R&D DEPARTMENT EXCEPT AS AUTHORIZED BY COMPAL ELECTRONICS, INC. NEITHER THIS SHEET NOR THE INFORMATION IT CONTAINS MAY BE USED BY OR DISCLOSED TO ANY THIRD PARTY WITHOUT PRIOR WRITTEN CONSENT OF COMPAL ELECTRONICS, INC.

Compal Electronics, Inc.

Title	PIR (PWR)	
Size: Custom	Document Number: KAV60	Rev: 0.1
Date: Sunday, February 22, 2009	Sheet 38 of 40	

KAV10

A-TEST Change

<8/25>
1. Update Power SCH
<8/26>
1. Update Power SCH
2. Change
   D7 SC300000D00 to SC300000O00
3.Change
   C49、C50 SE071180K80 to SE071180J80
<8/27>
1. Updata Power SCH
2. Modify
   RJ45 temp footprint FOX_JM3611A-R4122-7F_12P-T
<8/28>
1. Updata Power SCH
<9/1>
1. Updata Screw
<9/5>
1. SWAP USB20_1 Signal.
<9/10>
1. Remove Mini card pin55、pin56 接GND。
2. Change JREAD1.42、H26 to GNDA。
<9/12>
1. Swap 3G ESD pin neme。
<9/15>
1. Update Audio Jack footprint
2. Chcnge R641、R642 300ohm to 511ohm for Arthros。
3. Update L footprint。
<9/16>
1. Update POWER SCH.
<9/17>
1. Update POWER SCH.
2. ADD R380、R383 for ESD.
<9/18>
1. Update ATHEROS 10/100 LAN <AR8132/AR8114>
<9/24>
1. Change C870 0.1u to 1u.
<9/26>
1. R88 change to 0ohm.

B-TEST Change

<10/21>
1.Remove C389 for Audio can't detect issue on page 16
2.Add KSO1/KSO2 PU +3VALW on page25
3.Add R205 for schematic mistake on page 04
4.Change EC RST to PLTRST on page 25
5.Add J8 to cost down Audio LDO on page 20
6.Add R72 to reserve +3VALW for 3G on page 19
7.Reserve C238 for CRTDAC on page 10
8.Add R87 for Debug card on page 19
9.Change C108/C255 to 0.1uF for random hang issue
10.Change JP3 pin assignment on page 28
<10/21>
1. Update Power SCH
<10/29>
1. Audio AMP 10dB update to 6dB
<11/3>
1. Update Power SCH
<11/4>
1. Change R373、R374 to 56.2 ohm for DA-HP FSOV
2. Add C834、C851 for 3G noise
3. Change KB926 C1 to D2
4. Card reader RT5158E change to RT5159-GR
<11/5>
1. Swap D7 pin define
<11/10>
1. EC add R79、R90、R92 for SMS wakeup。

KAV60

A-TEST Change

<2008/11/14>
1. change R28,R32 BOM structure on page 4
2. change LCD POWER CIRCUIT form KAW10 to JAQ10 on page 13
3. change C670 BOM structure on page 13
4. change L5,L19(BK61608LL121-T0603) to R281,R287(39_0402) on page 14
5. change +CRT_VCC to +5VS on page 14
6. del R244(100K_0402) and add T17 on page 15
7. change J6 jump size form 43 x 118 to shortpads on page 16
8. change R204 BOM structure on page 16
9. change Q11 from SOT23 to SOT323-3 on page 17
10.change USB OC# circuit on page 17
11.Del R186(0_0805_5%) and +1.5VS_DMIPLLR on page 18
12.CHANGE R62(0_1206) to J9(43x39) on page 19
13.Del R83 R348 0_0402 on page 19
14.Mobile EC_TX,EC_RX from WLAN to WWAN and add R96 on page 19
15.CHANGE R65,R70(0_1206) to J10,J11(43x39) on page 19
16.change +UIM_PWR_1 to +UIM_PWR on page 19
17.Del D16(DAN217T146_SC59-3),R94,R408(0_0402) on page 19
18.change +5VS to +3VS on page 19
19.change EC signal name form BT_OFF# to BT_ON# on page 19
20.del Q21 on page 19
21.ADD PMOS SOFT START on page 19

<2008/11/16>
1. +VDDA CHANGE TO +5VS on page 20
2. Analog ground change to digital ground on page 20
3. Del L22 on page 20
4. DEL R383 R382 R384 GNDA & GND on page 20
5. change R380,R379,R381 form 0805 tO 0603 page 20
6. Add R94,R87 Vender suggesttion on page 21
7. Analog ground change to digital ground on page 21
8. reserve C5,C6,C883,C884 on page 22
9. reserve +3VALW on page 22
10.change +3VS to +CAM_VCC on page 22
11.change R651,R634 form (0_0603) to 43 x 39 jump on page 23
12.add net name +3VS_READER on page 23
13.add net name AV_PLL on page 23
14.add net name VREG on page 23
15.+3VS change to +3VS_READER on page 23
16.change R619 BOM structure on page 23
17.add net name RREF on page 23
18.del R623(0_0402) on page 23
19.Chang C855 form 4.7U to 10U on page 24 vendor suggest
20.Chang C846 form 4.7U to 10U on page 24 vendor suggest
21.change BJT form MMJT9435T1G to MBT35200 on page 24
22.change EC signal name form BT_OFF# to BT_ON# on page 25
23.change D12,R103,R104 BOM structure on page 25
24.change J1,J3(43 x 79) to R186,R193(0_0805) on page 26
25.change Q3 from 2N70002_SOT23 to 2N7002W-T/R7_SOT323-3 on page 26
26.change Q1 form 2N70002_SOT23 to 2N7002W-T/R7_SOT323-3 on page 26
27.change net name form WWAN_LED# to WWAN_LED_R# on page 28
28.change R130 BOM structure on page 28
29.change JP3 pin assignment on page 28
30.change Q2,Q15,Q24,Q7,Q23 form 2N70002_SOT23 to 2N7002W-T/R7_SOT323-3 on P29
31.change R18,R169,R280,R61,R279,Q2,Q15,Q24,Q7,Q23 BOM structure on age 29
32.+5VALW CHANG TO VL on page 29

<2008/11/17>
1. update POW SCH
2. change DIMMA from H5.2 to H4 on page 11
3. change +3VS to +5VS on page 14
4. change J9,J10,J11 from 43x39 to 43x79 on page 19
5. change R563,Q31 BOM structure on page 13
6. del +3VALW on page 22
7. del +1.5VS,+VCCP,+0.9VS,+1.8V Discharge
   path R18,R280,R61,R279 Q2,Q24,Q7,Q23 on page 29
8. change R24 BOM structure on page 17
9. del R253 on page 19
10.change L14 to R382 on page 25

<2008/11/17>
1. ADD WWAN_WAKEUP# ON pin 45 on page 19
2. DEL R79 ,R92 and change net name to WWAN_WAKEUP# on page 25
3. DEL R90 and WWAN_LED_R# on pin 85 on page 25
4. change net name form WWAN_LED_R# to WWAN_LED# on page 28

<2008/11/18>
1. Place R282,R296 close to F27,D27 on page 8
2. Del R93 R407(0_0402) on page 19
3. Move R204 from P16 to P25
4. Move R24 from P17 to P25
5. change Q10A,Q10B to 0 ohm on page 12
6. del pull up resistance (R112,R108) on page 12
7. change C883 from 4.7u to 10u on page 22

<2008/11/20>
1. change R112,R108,Q10A,Q10B BOM structure on page 12
2. add R149,R150 on page 12
3. add pull up resistance R292 on page 19
4. del R66(0_0402),R67(10K_0402) on page 25
5. restore R563,Q31 BOM structure on page 13
6. change D25 BOM structure on page 20

<2008/11/21>
1. Change +3VS to +3VALW on page 19
2. del R204 on page 25
3. del R143 and CLK_SD_48M on page 12
4. Change R137 from 12 ohm to 33 ohm on page 12
5. Move Card Reader to small board on page 23
6. Move SATA HDD Conn to small board on page 22
7. ADD JP7 on page 22
8. change JP2 from 6 pin to 8 pin on page 26
9. DEL LID Switch on page 26

<2008/11/24>
1. return the H5.2 pootprint on page 11

<2008/11/25>
1. add add R90 on page 19
2. change JMIN1 Conn printfoot on page 19
3. change JP2 Conn on page 26
4. change JP13 Conn on page 28
5. update power SCH

<2008/11/26>
1. change JP20 Conn and pin design on page 21
2. change JBT1 form 8 pin to 4 pin on page 19
3. del JP1 on page 13
4. SWAP JP12 on page 27
5. change JLVDS1 Conn form 20 pin to 30 pin on page 13
6. Del JP4 on page 20
7. combine the DMIC Conn and Camera Conn on page 13
8. add U7 on page 28
9. del JP3 on page 28
10.ADD SATA&CARDREADER&USB Conn(JP7) on page 22
11.update Power SCH
12.change C233 BOM structure on page 19
13.change JRJ45 Conn on page 24

<2008/11/28>
1. update Power SCH

<2008/12/01>
1. chang JP2 Conn on page 26
2. udate Power SCH

<2008/12/02>
1. SWAP JLVDS1 on page 13
2. del C843,C844 on page 24
3. change C847 from 0.1u to 1u on page 24
4. change C873 from 0.1u to 1u on page 24
5. move R441,R438 form P13 to P20 on page 20
6. change +5VAMP to +5VS on page 21
7. R2,R4,R518 close to EC on page 26
8. R1 close to Q3 on page 26

deddy.suyanto@gmail.com

Security Classification	Compal Secret Data		
Issued Date	2006/08/18	Deciphered Date	2007/8/18

THIS SHEET OF ENGINEERING DRAWING IS THE PROPRIETARY PROPERTY OF COMPAL ELECTRONICS, INC. AND CONTAINS CONFIDENTIAL AND TRADE SECRET INFORMATION. THIS SHEET MAY NOT BE TRANSFERED FROM THE CUSTODY OF THE COMPETENT DIVISION OF R&D DEPARTMENT EXCEPT AS AUTHORIZED BY COMPAL ELECTRONICS, INC. NEITHER THIS SHEET NOR THE INFORMATION IT CONTAINS MAY BE USED BY OR DISCLOSED TO ANY THIRD PARTY WITHOUT PRIOR WRITTEN CONSENT OF COMPAL ELECTRONICS, INC.

Compal Electronics, Inc.

Title: PIR-HW

Size: Custom | Document Number: KAV60 | Rev: 0.1

Date: Sunday, February 22, 2009 | Sheet 39 of 40

<2008/12/03>
1. SWAP JP7 pin define on page 22
2. change PJP2 connector on page 32

<2008/12/04>
1. update Screw on page 30
2. change JCRT1 Conn to SP010811273 on page 14
3. SWAP PJP2 pin define on page 32
4. add J12 on page 21

<2008/12/05>
1. del D8 and change D5 P/N on page 28
2. SWAP D2 pin define on page 13
3. change JBT1 Conn on page 19
4. update POWER SCH

<2008/12/08>
1. add J15 J16 on page 22
2. return D2 pin define on page 13
3. change JUSB1 Conn on page 28
4. swap JP6 pin define on page 27
5. add C32,C33,C42 for keypart on page 12
6. add C5 for keypart on page 13
7. add C9 for keypart on page 16
8. add C11,C21,C26,C27 for keypart on page 22

<2008/12/10>
1. del H11 H_3P0N on page 30
2. Change to SA00002CI10 to SA00002CI20
   S IC ALC272X-GR LQFP 48P CODEC on page 20
3. add net name(+VCCP_D) 20mil on page 10
4. SWAP D29 Pin Define on page 28
5. change R185 from 200K to 33K on page 29
6. change R68 from 200K to 22K on page 29

<2008/12/11>
1. change H17 from H_2P5 to H_2P5x4P4 on page 30
2. del R388,R387,R386,R385,D10,D13 on page 21
3. update Power SCH
4. +5VS change to +5VALW on page 21

<2008/12/14>
1. Del R129 on page 12
2. add C45 for keypart on page 12
3. del R76 on page 25

<2008/12/15>
1. change R137 BOM structure
   and add R143 on page 12
2. change C852,C853,Y5 BOM structure on page 24
3. add C55 on page 24
4. change C842 BOM structure on page 24
5. del J15,J16,C21 on page 22
6. add net name BATT_AMB_LED#
   BATT_GRN_LED# on page 22
7. +3VS_READER change to +3VALW on page 22

<2008/12/16>
1. del R143 on page 12
2. del C55 on page 24
3. swap CLK_PCIE_CARD and CLK_PCIE_CARD# on page 27

<2008/12/17>
1. modify H15,H19,H20,H29,H30 on page 30
2. add H32 on page 30
3. +5VALW change to +3VALW on page 26

<2008/12/18>
1. add R102 on page 19

<2008/12/19>
1. change R284 from 453 ohm to 150 ohm
   R286 from 300 ohm to 120 ohm on page 26
2. change 8132 P/N to SA000033N00 on page 40

<2008/12/22>
1. change D1 BOM structure on page 26
2. change C116 form 1U to 4.7U on page 25
3. change R24 from 10k to 47K
   R103 from 0 to 2.2K on page 25
4. change D12,R104 BOM structure on paage 25
5. change L30,C856,C857 BOM structure on page 24
6. change D17 P/N from SCA00000700
   to SCA00000A00 and BOM structure on page 13
7. change D2 P/N from SC300000O00
   to SC300000B00 and BOM structure on page 13
8. change D3,D4 P/N from SCA00000G00
   to SCA00000A00 and BOM structure on page 14
9. change D33 P/N from SC10T24C000
   to SCA00000A00 and BOM structure on page 26
10. change D18 P/N from SC10T24C010
   to SCA00000A00 and BOM structure on page 27
11. change D9 P/N from SC10T24C010
   to SCA00000A00 and BOM structure on page 27
12. change D29 P/N from SC300000O00
   to SC300000B00 and BOM structure on page 28

<2008/12/24>
1. change C32 C33 C42 C45
   BOM structre on page 12
2. change C117 BOM structure on page 25
3. change R88 from 0 ohm to 22 ohm on page 25
4. U2 Change to SA000033H00 on page 28
5. U7 Change to SA000033H00 on page 28

Pre C-TEST Change

<2008/12/29>
1. change R141,R140,R147,R81,R91
   R82,R97,R95,R98 BOM structure on page 12
2. Change R130 from 200K to 100K
   and change BOM structure on page 28
3. change D5 BOM structure on page 28

<2008/12/231>
1. change R371 from 0 ohm to 22 ohm on page 20
2. U3 Change to SA000035G00 on page 28

Memo control

<2008/12/31>
1. del C9 on page 16
2. add C21 for keypart on page 16
3. change R644 from 0603 to 0805 on page 24
4. change R643 from 0603 to 0402 on page 24
5. change C841 from 0603 to 0402 on page 24
6. change L29,L30 from 0805 to 0603 on page 24
7. del R637 R638 on page 24

<2009/01/13>
1. SWAP JP11 on page 27
2. change SW4 P/N to SN111005800 on page 26
3. ADD C160 on page 24
4. change JMIN1 Conn foorprintt on page 19
5. Change PWR_LED and PWR_SUSP_LED#
   Net name on page 26
6. Change C231 P/N to SGA00001E00 on page 28

<2009/01/14>
1. add R660 pull up +3VALW on page 25
2. change R120 and R126 to PVT ID on page 25
3. update Screr
4. add C28 for keypart on page 22

<2009/01/16>
1. del H31 on page 30
2. change JP20 Conn on page 21
3. del D29,L9,R144,R136 on page 28

<2009/01/17>
1. Del R110,R119 on page 12
2. change R141,R140,R147,R81,R91,R82,R97,
   R95,R98 BOM structure on page 12

Pre C BOM

<2009/01/20>
1. add JDIM1 pin 200 and pin 201 to GND
   on page 11
2. JMINI1 pin 55,56 change to
   non-GND on page 19
3. SWAP JP20 on page 21
4. change H18 to non-GND on page 30
5. Chang C160 from 0603(4.7u) to 0402(2.2u) on page 24

<2009/01/21 Ivan>
1. change R441 from 0ohm/0603 to 33ohm/0402
2. change C459 from 0.01uF/0402 to 4.7uF/0603
3. change R438 from 0ohm/0603 to 0ohm/0402

<2009/01/21-1>
1. change U26 BOM structure on page 20 memo 不加
2. del C11,C28,C26 on page 22
3. Update Power SCH

<2009/01/22>
1. update H15,H19,H20,H30 from 3P8 to 3P6
01/22

<2009/01/22-1>
1. del C94 C95 on page 11
2. add C164,C165 01/22
3. move C159 from page 11 to page 12
4. add R383 on page 20

<2009/01/22-2>
1. change C396 from 10U/0806 to 4.7U/0603 on page 28
2. add C469 on page 28

<2009/01/22-3>
1.add C268 01/22

Pre C gerber

<2009/01/23>
1. change C249 BOM structure(@) on page 10
2. change C603 from 220P to 100P on page 13
3. change C21 from 10p to 22p on page 16
4. change C459 from 4.7uF to 1uF on page 20
5. change R371,C470 BOM structure(@) on page 20
6. change C604 from 220P to 18P on page 20
7. change R122,R123,R124,R125
   from 4.7K to 2.2K on page 25
8. change R284 from 150 ohm to 300 ohm
   R286 from 120 ohm to 100 ohm on page 26
9. change D5 BOM structure(@) on page 28
10. change C162 from 27P to 22P on page 12
11. change C852,C853 from 27p to 15p on page 24
12. change C49 C50 from 18pf to 10pf on page 16
13. change c150,c123 from 15p to 22p on page 25

<2009/01/23-1>
1. change C42,C45 from 10p to 22p on page 12
2. R115,R121 from 33 ohm to 39 ohm on page 12
3. change C603 from 100P to 47P on page 13
4. change R441 from 33 ohm to 39 ohm on page 20
5. change C604 Bom structure(@) on page 20

Pre C BOM

C-TEST Change

<2009/02/03>
1. Add R105,R106 on page 19
2. ADD BATT_GRN_LED_1# and
   BATT_AMP_LED_1# on page 25
3. add R651 O_0402 on page 24

<2009/02/04>
1. add R279,R280,R294,R295 on page 17
2. del C26 on page 22
3. change C841 from 0402 1U to 0603 1U
   on page 24

<2009/02/05>
1.Del J10,J11 and add R65,R66 on page 19

C modify gerber

<2009/02/06>
1. change C226 BOM structure on page 19
2. Change U3 from SA000035G00
   to SA000022J00 on page 28
3. change L13 from SM01000AL00 to SM010004010
   on page 25
4. change L23 from SM010032020 to SM010004010
   on page 20
5. change U26,C459 BOM structure(@) on page 20
6. change R1,R2,R4 from 300 to 200 ohm on page 26
7. change R518 from 300 to 422 ohm on page 26
8. change R137 from 33 to 39 ohm on page 12
9. change C32 from 10P to 15p ohm on page 12
10. change C42,C45 from 22p to 15p on page 12
11. change R115,R121 from 39 ohm to 47 ohm on page 12

Pre C memo

<2009/02/18>
1. change R279,R280,R294,R295 BOM structure
on page 17
2. change U26,C459 BOM structure
on page 20
3. change L13 from SM010004010 to SM010032020
on page 25
4. change L23,L24 from SM010004010 to
SM010032020 on page 20

Pre MP-TEST Change

<2009/02/18>
1. Del J6 and add R219 on page 16
2. Del C249 on page 10
3. change LED2 BOM structure on page 26

<2009/02/20>
1. update Power SCH
2. del L8,R145,R146 on page 13

<2009/02/22>
1. update H15,H19,H20,H30 from 3P6 to 3P3
   on page 30
2. change H18 from 3P2N to 3P1N on page 30
3. add R107,R110 on page 19

deddy.suyanto@gmail.com

Security Classification	Compal Secret Data		
Issued Date	2006/08/18	Deciphered Date	2007/8/18

THIS SHEET OF ENGINEERING DRAWING IS THE PROPRIETARY PROPERTY OF COMPAL ELECTRONICS, INC. AND CONTAINS CONFIDENTIAL AND TRADE SECRET INFORMATION. THIS SHEET MAY NOT BE TRANSFERED FROM THE CUSTODY OF THE COMPETENT DIVISION OF R&D DEPARTMENT EXCEPT AS AUTHORIZED BY COMPAL ELECTRONICS, INC. NEITHER THIS SHEET NOR THE INFORMATION IT CONTAINS MAY BE USED BY OR DISCLOSED TO ANY THIRD PARTY WITHOUT PRIOR WRITTEN CONSENT OF COMPAL ELECTRONICS, INC.