Philco

Vista Explodida

TV PH32 LED A

0800 415300

Suporte.tecnico@britania.com.br

VISTA EXPLODIDA

PRODUTO	CÓDIGO	PADRÃO N°SÉRIE
TV PH32 LED A	099323001ATX	000 00000 00 T037X
(X) - Último algarismo do código e Nº série significam a versão do aparelho		

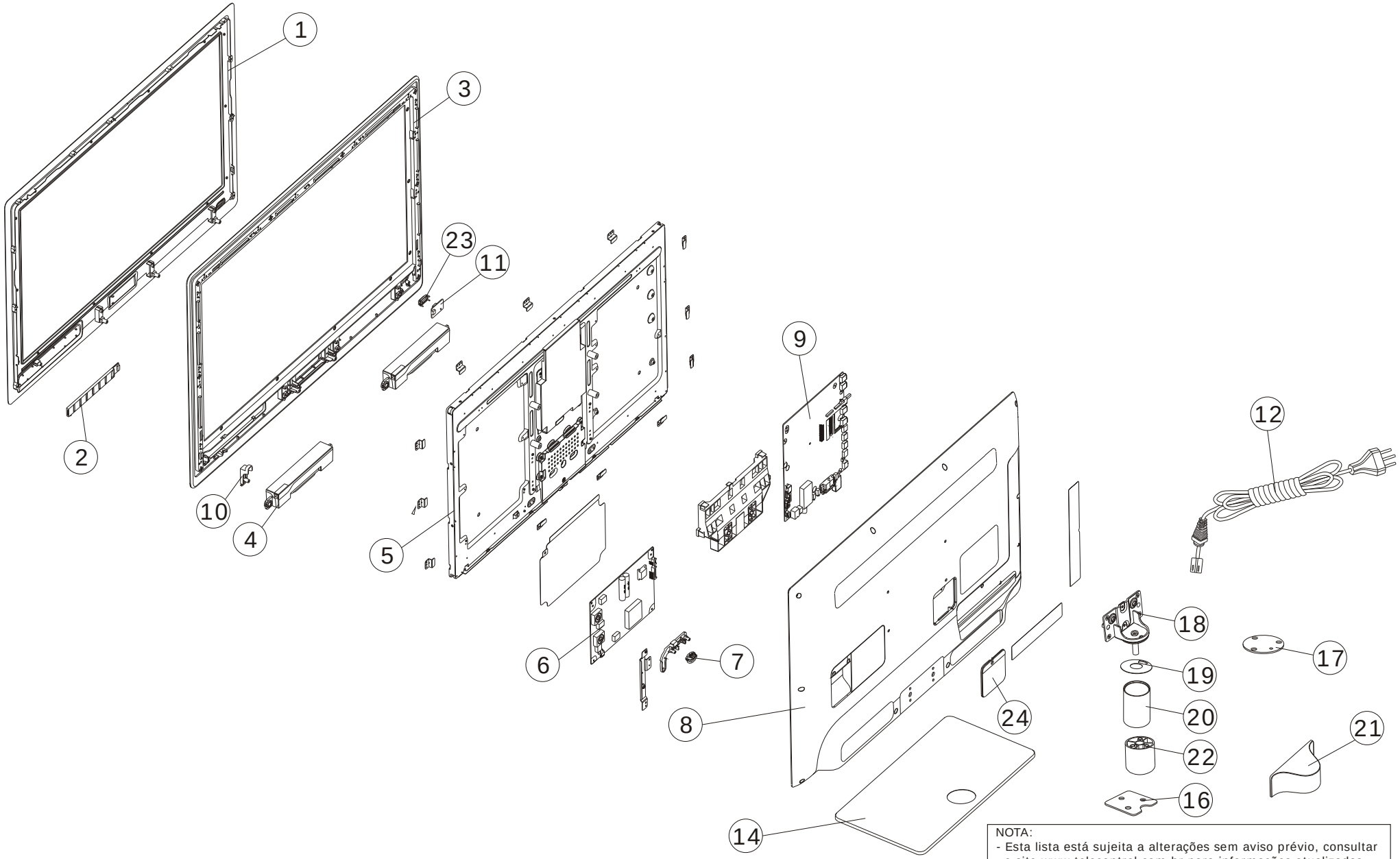

NOTA:
- Esta lista está sujeita a alterações sem aviso prévio, consultar o site www.telecontrol.com.br para informações atualizadas.
- Em caso de dúvidas, entrar em contato com o Suporte Técnico
- Somente os itens que possuem códigos serão fornecidos.

New Parts

ITENS DA VISTA EXPLODIDA

Código	Descrição peça	Nº
710110	DEC GAB FRONT PH32 LED A	1
710454	PCI TECLADO TOUCH PH32 LED A	2
710109	GAB INTERMEDIARIO PH32 LED A	3
710061	ALOJAMENTO ALTO-FAL PH32 LED A	4
710386	DISPLAY AUO T315XW06 V.2 PH32 LED	5
710584	PCI FONTE PH32 LED A	6
710093	SOQUETE AC PH32 LED A	7
710086	GAB TRAS TV PH32 LED A	8
710583	PCI PRINCIPAL PH32 LED A	9
710119	SUP ALOJAMENTO ALTO-FAL PH32 LED A	10
710585	PCI IR PH32 LED A	11
710127	CORD 2x0,75mm 1,5M	12
710057	ALTO-FAL 16 Ohm 10W YDP310-10T-A	13
710063	BASE VIDRO PH32 LED A	14
710064	PE BORRACHA TV PH32 LED A	15
710065	ARRUELA HASTE PH32 LED A	16
710066	ARRUELA PVC HASTE PH32 LED A	17
710069	MESA HASTE PH32 LED A	18
710071	ISOLADOR HASTE-MESA PH32 LED A	19
710073	LUVA MESA HASTE PH32 LED A	20
710070	COBERTURA HASTE PH32 LED A	21
710076	HASTE ALUMINIO PH32 LED A	22
710108	LENTE IR PH32/42 LED A	23
710085	TAMPA CONEC ATUAL. PH32 PH42 LED A	24

DEMAIS ITENS FORNECIDOS

Código	Descrição peça	Nº
	PCI PRINCIPAL	
706618	CI HC4052 (SOP-16)(SMD)	U18
706624	CI AZ1084D 3.3V (T0252) (SMD)	U31
710352	CI MS58	U17
710353	CI RT8110GJ8	U16
704478	CI 4558 (SOP-8)(SMD)	U25
706491	CI LD1117S50 (SOT223-3)(SMD)	U1
708812	CI LD1117S 1.25 15V(SOT223)(SMD)	U7,U63
704492	CI AMS1117 3.3V (SOT223)(SMD)	U9,U62
706623	CI LD1117S25TR (2.5V)	U6,U61
710354	CI STA339-BWB (PowerSSO-36)	U700
710355	CI SII918-7AB	U23
710356	TUNER VA1G5BF8012 SHARP	TU1
	PCI FONTE	
710321	CI L6599DTR (SOC-16)	U401
709217	CI LM393D (SOP-8) SMD	U404
710357	CI PWL4222 PFC (NCP1607)	U301
710358	CI VIPER17LN (DIP-7)(PTH)	U201
708819	CI PS2561 OPTO (DIP-4)(PTH)	PC1,PC2,PC3
701632	CI TL431.KA431 (TO-92)(PTH)	U402,U403
710359	TRANSISTOR K12A50D MOSFET	QW4,QW2,QW3
	ACESSÓRIOS	
710124	CABO ADAPT VIDEO COMPONENTE	***
710125	CABO ADAPT AUDIO	***
710126	CABO ADAPT VIDEO COMPOSTO	***
710586	CONTROLE REM PH32/42/46/55 LED	***
710128	EMBALAGEM TV PH32 LED A	***
1610128	EMBALAGEM TV PH32 LED A (NAC)	***
710590	CONJ CALCO TV PH32 LED A	***
710360	MANUAL USUARIO TV PH32 LED A	***
710361	GUIA RAPIDO TV PH32 LED A	***
706589	CERTIF. GARANTIA AUDIO E VIDEO	***
710077	CHAVE ALLEN 4mm	***
710362	KIT PARAFUSOS FIX BASE PH32 LED A	***
710074	PARAFUSO FIX BASE PH32 LED A	***
710099	PORCA HEXAGONAL 3x2.3mm	***
710078	PARAFUSO HEXAGONAL M6	***
710100	PARAFUSO M4X8	***

New Parts

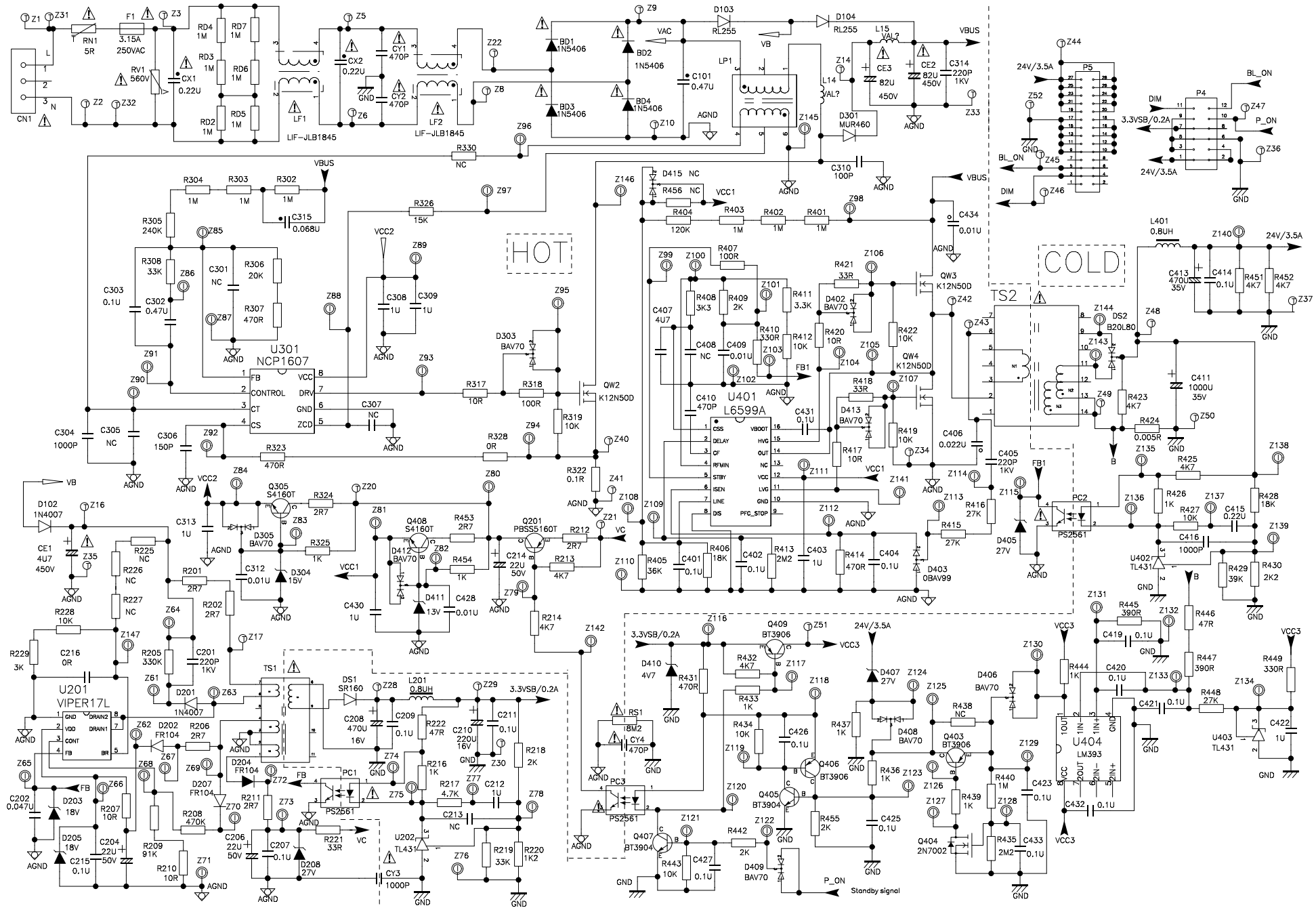
HOT
COLD
U301
NCP1607
U401
L6599A
U201
VIPER17L
U404
LM393
Q305
S4160T
Q408
S4160T
Q201
PBSS5160T
Q409
BT3906
Q406
BT3906
Q405
BT3904
Q407
BT3904
Q403
BT3906
Q404
2N7002
QW2
K12N50D
QW3
K12N50D
QW4
K12N50D
TS1
TS2
LIF-JLB1845
LIF-JLB1845
PS2561
PS2561
PS2561
PC1
PC2
PC3
U402
TL431
U403
TL431
U202
TL431
DS1
SR160
DS2
B20L80
D301
MUR460
D403
0BAV99
D405
27V
D407
27V
D408
BAV70
D409
BAV70
D410
4V7
D411
13V
D412
BAV70
D413
BAV70
D415 NC
R456 NC
R438 NC
R330 NC
R225 NC
R226 NC
R227 NC
C307 NC
C301 NC
C408 NC
C213 NC
VBUS
VAC
VB
VCC1
VCC2
VCC3
3.3VSB/0.2A
24V/3.5A
BL_ON
DIM
P_ON
Standby signal
AGND
GND
VC
FB
FB1
LP1
L14
L15
L401
0.8UH
L201
0.8UH
LF1
LF2
CN1
RN1
5R
F1
3.15A
250VAC
RV1
560V
CX1
0.22U
CX2
0.22U
CY1
470P
CY2
470P
CY3
1000P
CE1
4U7
450V
CE2
82U
450V
CE3
82U
450V
C314
220P
1KV
C413
470U
35V
C411
1000U
35V
C416
1000P
C419
0.1U
C420
0.1U
C421
0.1U
C422
1U
C423
0.1U
C432
0.1U
C433
0.1U
C434
0.01U
C310
100P
C315
0.068U
C101
0.47U
C202
0.047U
C215
0.1U
C216
0R
C313
1U
C430
1U
C428
0.01U
C431
0.1U
C406
0.022U
C405
220P
1KV
C414
0.1U
C415
0.22U
C451
4K7
C452
4K7
R451
4K7
R452
4K7
R424
0.005R
R425
4K7
R426
1K
R427
10K
R428
18K
R429
39K
R430
2K2
R446
47R
R447
390R
R448
27K
R449
330R
R445
390R
R444
1K
R439
1K
R440
1M
R435
2M2
R455
2K
R442
2K
R443
10K
R437
1K
R436
1K
R434
10K
R433
1K
R432
4K7
R431
470R
R415
27K
R416
27K
R417
10R
R418
33R
R419
10K
R420
10R
R421
33R
R422
10K
R423
4K7
R413
2M2
R414
470R
R403
1M
R402
1M
R401
1M
R404
120K
R405
36K
R406
18K
R407
100R
R408
3K3
R409
2K
R410
330R
R411
3.3K
R412
10K
R453
2R7
R454
1K
R213
4K7
R214
4K7
R212
2R7
R324
2R7
R325
1K
R322
0.1R
R328
0R
R319
10K
R318
100R
R317
10R
R323
470R
R326
15K
R330
R304
1M
R303
1M
R302
1M
R305
240K
R306
20K
R307
470R
R308
33K
R209
91K
R210
10R
R207
10R
R208
470K
R206
2R7
R201
2R7
R202
2R7
R205
330K
R229
3K
R228
10K
R221
33R
R220
1K2
R219
33K
R218
2K
R217
4.7K
R216
1K
R222
47R
R211
2R7
R454
1K
C301
0.47U
C302
0.47U
C303
0.1U
C304
1000P
C305
NC
C306
150P
C307
NC
C308
1U
C309
1U
C310
100P
C311
0.1U
C312
0.01U
C313
1U
C314
220P
1KV
C315
0.068U
C316
0R
C317
C318
C319
C320
C321
C322
C323
C324
C325
C326
C327
C328
C329
C330
C331
C332
C333
C334
C335
C336
C337
C338
C339
C340
C341
C342
C343
C344
C345
C346
C347
C348
C349
C350
C351
C352
C353
C354
C355
C356
C357
C358
C359
C360
C361
C362
C363
C364
C365
C366
C367
C368
C369
C370
C371
C372
C373
C374
C375
C376
C377
C378
C379
C380
C381
C382
C383
C384
C385
C386
C387
C388
C389
C390
C391
C392
C393
C394
C395
C396
C397
C398
C399
C400
C401
0.1U
C402
0.1U
C403
1U
C404
0.1U
C405
220P
1KV
C406
0.022U
C407
4U7
C408
NC
C409
0.01U
C410
470P
C411
1000U
35V
C412
1U
C413
470U
35V
C414
0.1U
C415
0.22U
C416
1000P
C417
C418
C419
0.1U
C420
0.1U
C421
0.1U
C422
1U
C423
0.1U
C424
C425
0.1U
C426
0.1U
C427
0.1U
C428
0.01U
C429
C430
1U
C431
0.1U
C432
0.1U
C433
0.1U
C434
0.01U
C435
C436
C437
C438
C439
C440
C441
C442
C443
C444
C445
C446
C447
C448
C449
C450
C451
4K7
C452
4K7
C453
C454
C455
C456
C457
C458
C459
C460
C461
C462
C463
C464
C465
C466
C467
C468
C469
C470
C471
C472
C473
C474
C475
C476
C477
C478
C479
C480
C481
C482
C483
C484
C485
C486
C487
C488
C489
C490
C491
C492

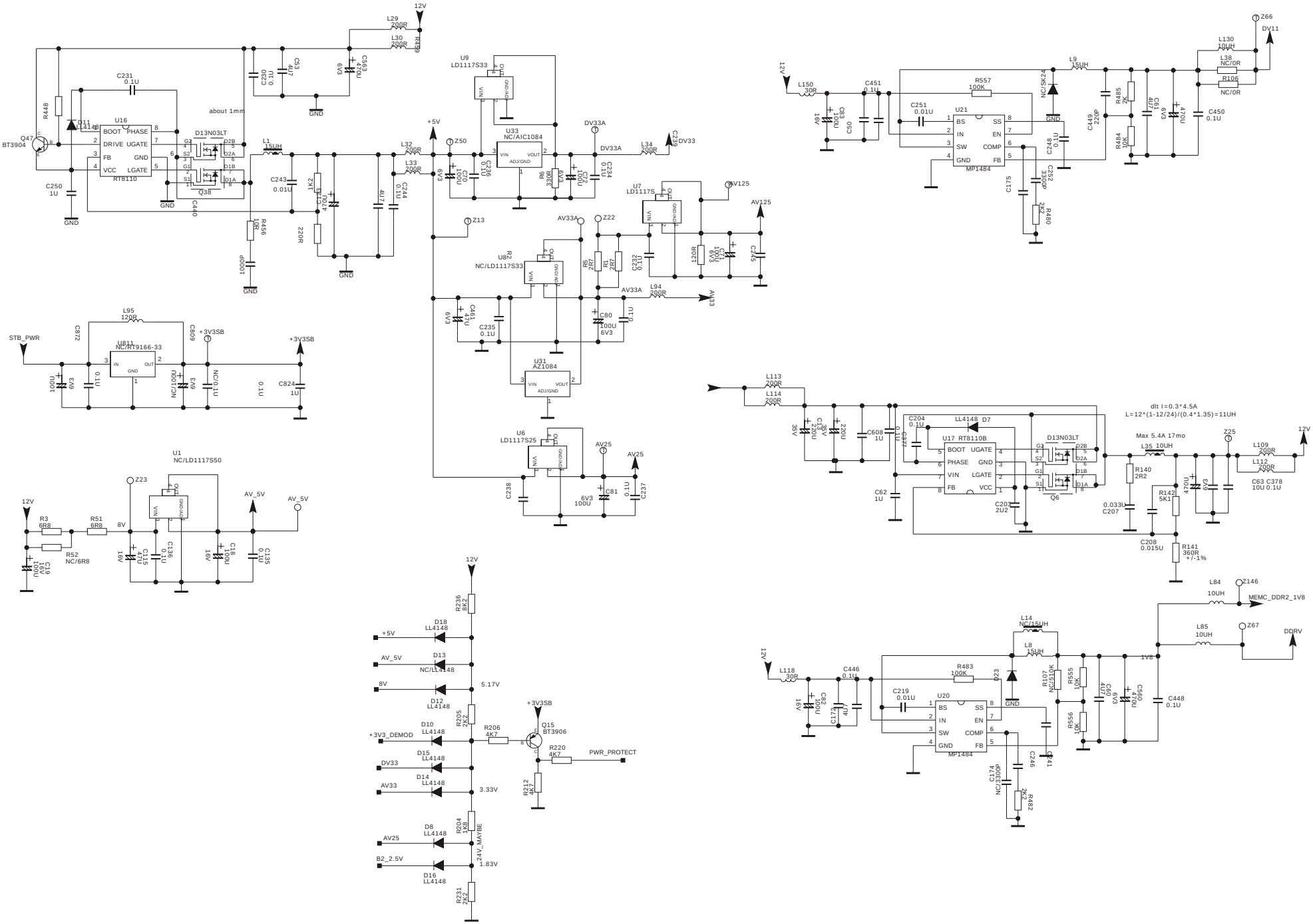
U16
RT8110
BOOT
PHASE
DRIVE
UGATE
FB
GND
VCC
LGATE
D13N03LT
Q38
Q47
BT3904
R448
D11
LL4148
C231
0.1U
C250
1U
C440
C243
0.01U
R456
10R
1000P
220R
L1
15UH
L29
200R
L30
200R
R429
12V
C563
470U
6V3
C53
4U7
C232
0.1U
GND
U9
LD1117S33
U33
NC/AIC1084
ADJ/GND
VIN
VOUT
+5V
Z50
DV33A
DV33
L32
200R
L33
200R
L34
200R
C229
100U
C222
100U
C234
0.1U
R6
330R
U7
LD1117S
AV125
Z13
AV33A
Z22
U8
NC/LD1117S33
R5
2K2
R1
2K7
C232
0.1U
120R
C275
L94
200R
AV33
C241
47U
C235
0.1U
C80
100U
6V3
U31
AZ1084
U6
LD1117S25
AV25
C238
C81
100U
6V3
0.1U
C237
L95
120R
C872
C809
+3V3SB
STB_PWR
U811
NC/R19166-33
IN
OUT
GND
100U
6V3
0.1U
NC/0.1U
C824
1U
U1
NC/LD1117S50
Z23
AV_5V
R3
6R8
R51
6R8
R52
NC/6R8
C19
100U
C115
470U
16V
C136
0.1U
C18
100U
C135
0.1U
R236
8K2
D18
LL4148
D13
NC/LL4148
D12
LL4148
R205
2K2
R206
4K7
Q15
BT3906
R220
4K7
PWR_PROTECT
R212
4K7
D10
LL4148
D15
LL4148
D14
LL4148
D8
LL4148
D16
LL4148
R204
1K8
R231
2K2
+3V3_DEMOD
DV33
AV33
AV25
B2_2.5V
5.17V
3.33V
1.83V
24V_MAYBE
Z66
DV11
L130
10UH
L38
NC/0R
R106
NC/0R
L9
15UH
L150
30R
C451
0.1U
R557
100K
C251
0.01U
U21
MP1484
BS
IN
SW
GND
SS
EN
COMP
FB
NC/SK24
C449
220P
R485
2K
R484
2K
C61
4U7
6V3
470U
C450
0.1U
C248
0.1U
C252
3300P
C175
R480
2K2
L113
200R
L114
200R
C204
0.1U
LL4148
D7
U17 RT8110B
C608
1U
C62
1U
C203
2U2
Q6
dIt I=0.3*4.5A
L=12*(1-12/24)/(0.4*1.35)=11UH
Max 5.4A 17mo
L35 10UH
Z25
L109
200R
L112
200R
C63 C378
10U 0.1U
R140
2R2
R142
5K1
0.033U
C207
C208
0.015U
R141
360R
+/-1%
L84
10UH
Z146
MEMC_DDR2_1V8
L85
10UH
Z67
DDRV
L14
NC/15UH
L8
15UH
L118
30R
C446
0.1U
R483
100K
C219
0.01U
U20
MP1484
R107
NC/510K
R555
10K
R556
10K
C448
0.1U
C174
NC/3300P
R482
2K2
C141

New Parts

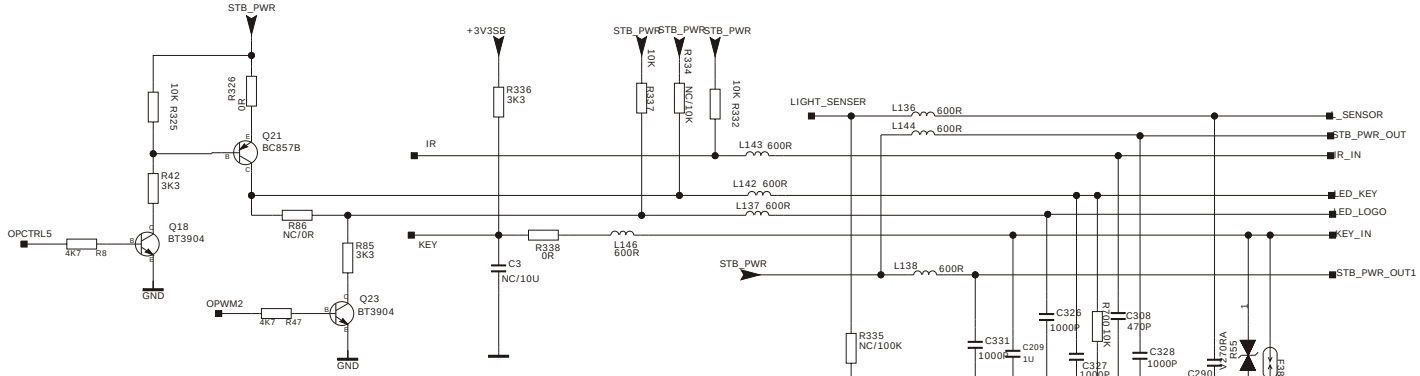

R338, C3 FOR PWM TOUCH KEY ONLY, R338 IS 0 OHM IN OTHER KEY MODE.

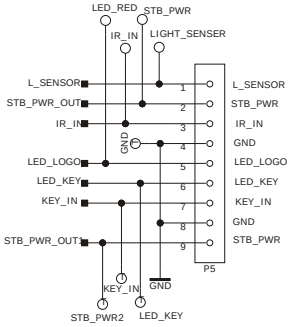

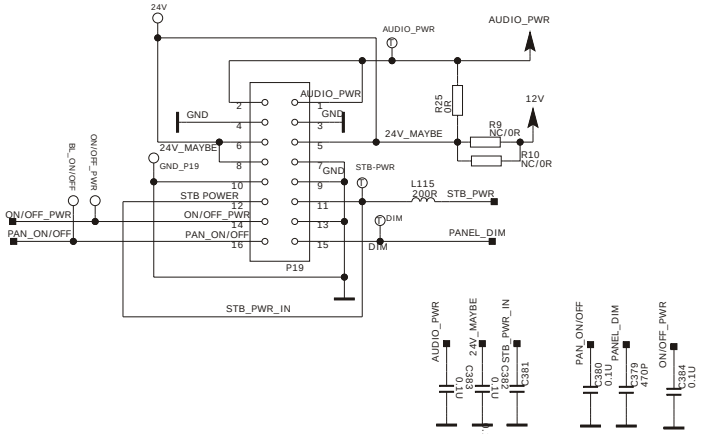

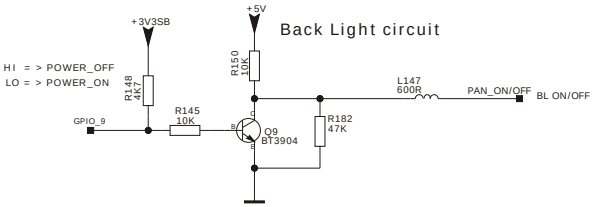

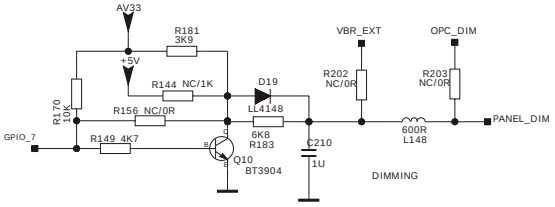

New Parts

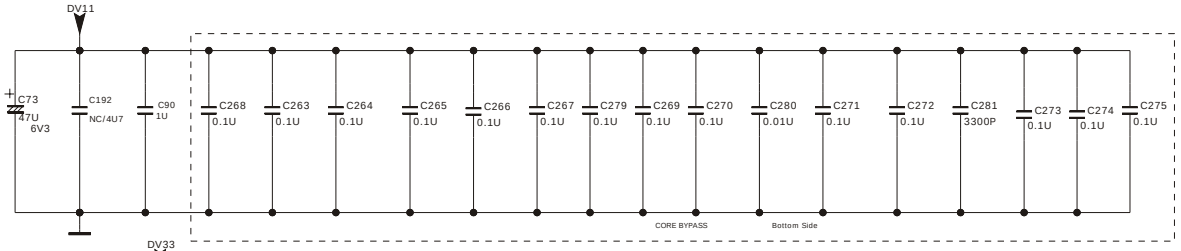

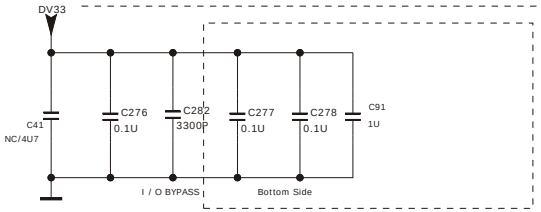

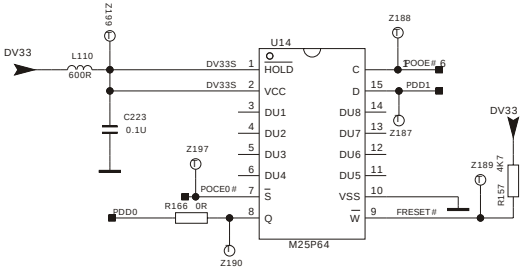

MT5362 STRAPPING MODE

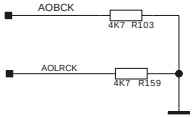

Strapping Mode	OPWM2	AOBCK	AOLRCK
Normal mode	0	0	0
ICE mode	0	0	1
CPU model mode	0	1	0

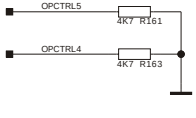

Trap Mode	OPCTRL5	OPCTRL4
Core Reset 1us	0	0
Core Reset 3.3V	0	1
SCAN mode	1	0
Core Reset 0.9V	1	1

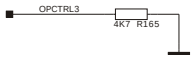

Strapping Mode	OPCTRL3(O)	OPCTRL2(O)
XTAL 54MHz	0	0
XTAL 27MHz	1	0

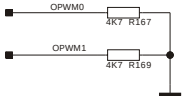

Strapping Mode	OPWM0(O)	OPWM1(O)
Nor Boot	0	0
NAND Boot	0	1
large NAND Boot	1	0

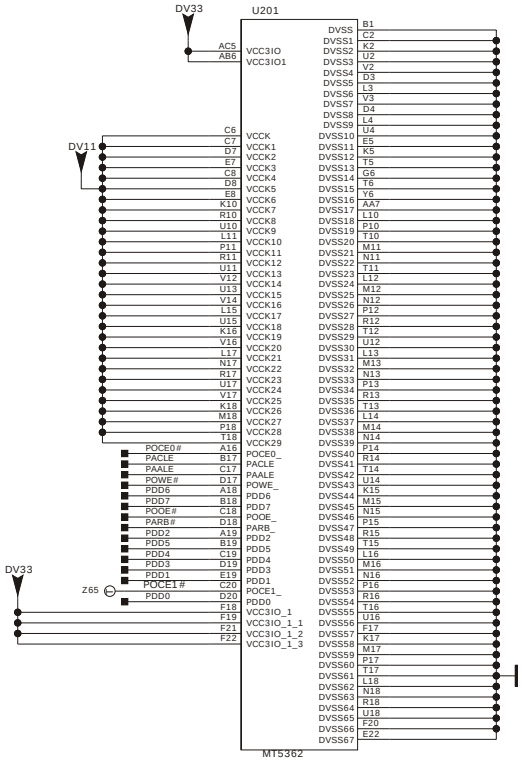

New Parts

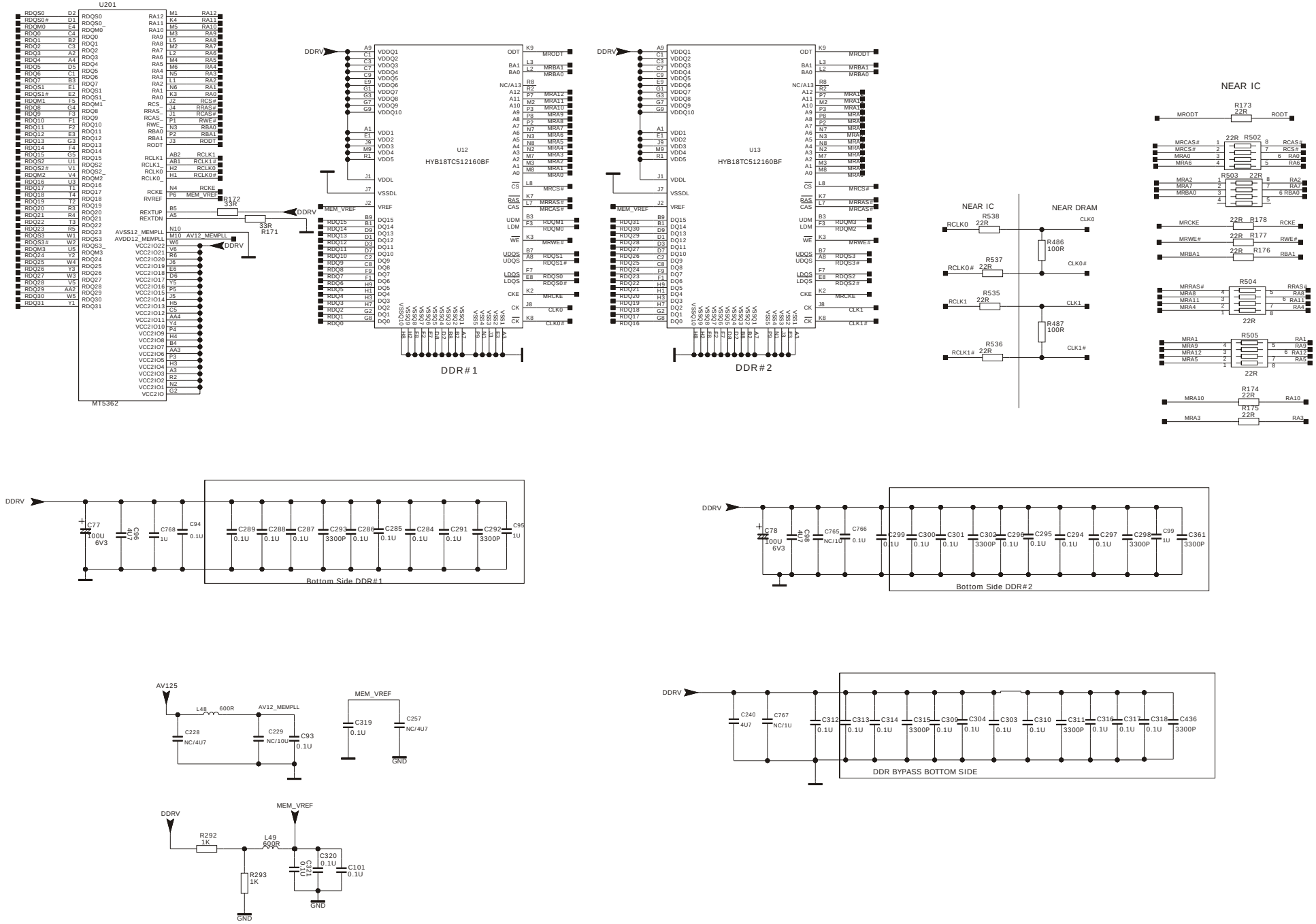
U201
MT5362
DDRV
R172 33R
R171 33R
AVSS12_MEMPLL
AVDD12_MEMPLL
AV12_MEMPLL
U12
HYB18TC512160BF
DDR#1
U13
HYB18TC512160BF
DDR#2
NEAR IC
NEAR DRAM
R538 22R
R537 22R
R535 22R
R536 22R
R486 100R
R487 100R
R173 22R
R502 22R
R503 22R
R178 22R
R177 22R
R176 22R
R504 22R
R505 22R
R174 22R
R175 22R
C77 100U 6V3
C96 4U7
C768 1U
C94 0.1U
C289 0.1U
C288 0.1U
C287 0.1U
C293 3300P
C286 0.1U
C285 0.1U
C284 0.1U
C291 0.1U
C292 3300P
C95 1U
Bottom Side DDR#1
C78 100U 6V3
C98 4U7
C765 NC/1U
C766 0.1U
C299 0.1U
C300 0.1U
C301 0.1U
C302 3300P
C296 0.1U
C295 0.1U
C294 0.1U
C297 0.1U
C298 3300P
C99 1U
C361 3300P
Bottom Side DDR#2
AV125
L48 600R
AV12_MEMPLL
C228 NC/4U7
C229 NC/10U
C93 0.1U
MEM_VREF
C319 0.1U
C257 NC/4U7
GND
C240 4U7
C767 NC/1U
C312 0.1U
C313 0.1U
C314 0.1U
C315 3300P
C309 0.1U
C304 0.1U
C303 0.1U
C310 0.1U
C311 3300P
C316 0.1U
C317 0.1U
C318 0.1U
C436 3300P
DDR BYPASS BOTTOM SIDE
R292 1K
L49 600R
R293 1K
C321 0.1U
C320 0.1U
C101 0.1U

New Parts

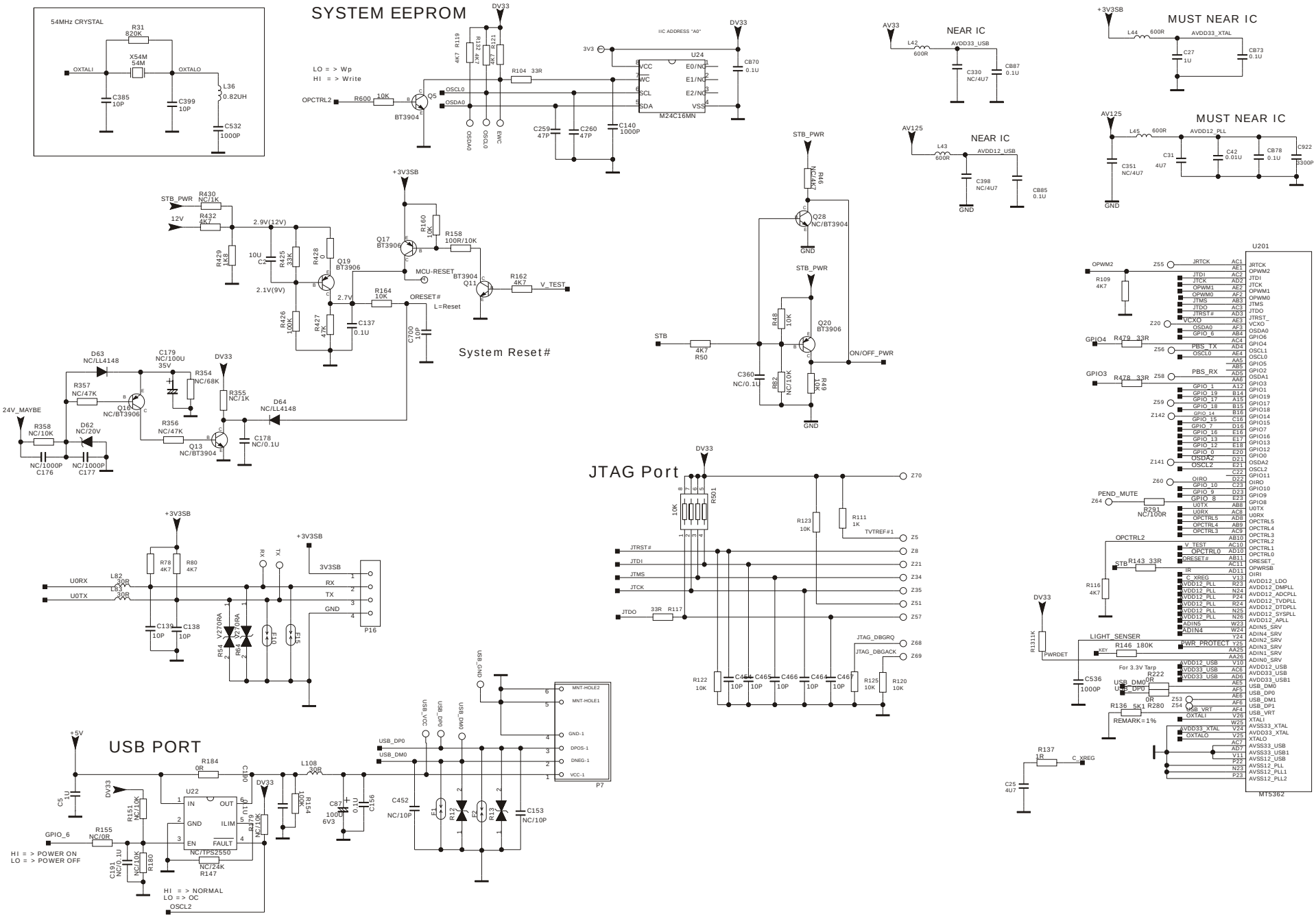
54MHz CRYSTAL
SYSTEM EEPROM
LO = > Wp
HI = > Write
IIC ADDRESS "A0"
M24C16MN
NEAR IC
MUST NEAR IC
System Reset#
JTAG Port
USB PORT
HI = > POWER ON
LO = > POWER OFF
HI = > NORMAL
LO = > OC
MT5362

New Parts

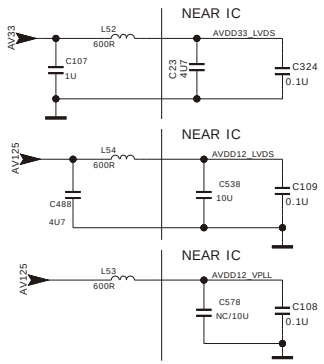
NEAR IC
AV33
L52
600R
AVDD33_LVDS
C107
1U
C23
4U7
C324
0.1U
NEAR IC
AV125
L54
600R
AVDD12_LVDS
C488
4U7
C538
10U
C109
0.1U
NEAR IC
AV125
L53
600R
AVDD12_VPLL
C578
NC/10U
C108
0.1U

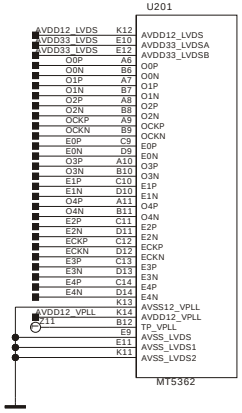
U201
AVDD12_LVDS K12
AVDD33_LVDS E10
AVDD33_LVDS E12
O0P A6
O0N B6
O1P A7
O1N B7
O2P A8
O2N B8
OCKP A9
OCKN B9
E0P C9
E0N D9
O3P A10
O3N B10
E1P C10
E1N D10
O4P A11
O4N B11
E2P C11
E2N D11
ECKP C12
ECKN D12
E3P C13
E3N D13
E4P C14
E4N D14
K13
AVDD12_VPLL K14
W11 B12
E9
E11
K11
AVDD12_LVDS
AVDD33_LVDSA
AVDD33_LVDSB
O0P
O0N
O1P
O1N
O2P
O2N
OCKP
OCKN
E0P
E0N
O3P
O3N
E1P
E1N
O4P
O4N
E2P
E2N
ECKP
ECKN
E3P
E3N
E4P
E4N
AVSS12_VPLL
AVDD12_VPLL
TP_VPLL
AVSS_LVDS
AVSS_LVDS1
AVSS_LVDS2
MT5362

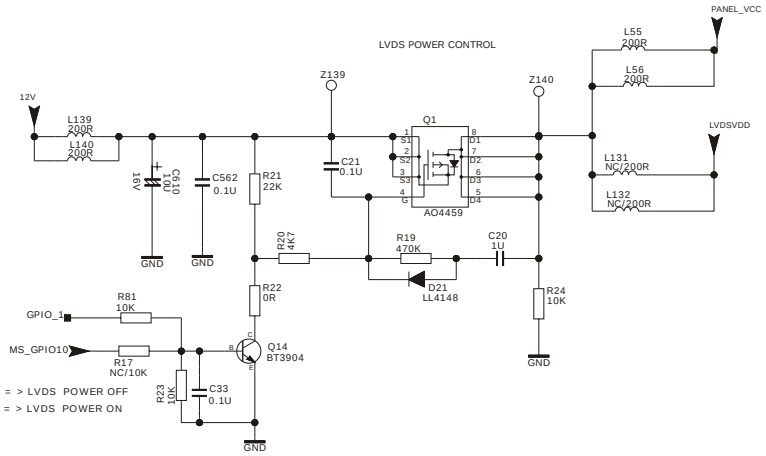
LVDS POWER CONTROL
PANEL_VCC
L55
200R
L56
200R
LVDSVDD
L131
NC/200R
L132
NC/200R
12V
L139
200R
L140
200R
Z139
Z140
Q1
AO4459
C610
100
16V
C562
0.1U
R21
22K
C21
0.1U
R20
4K7
R19
470K
C20
1U
D21
LL4148
R22
0R
R24
10K
GND
R81
10K
GPIO_1
MS_GPIO10
R17
NC/10K
Q14
BT3904
R23
10K
C33
0.1U
LO = > LVDS POWER OFF
HI = > LVDS POWER ON

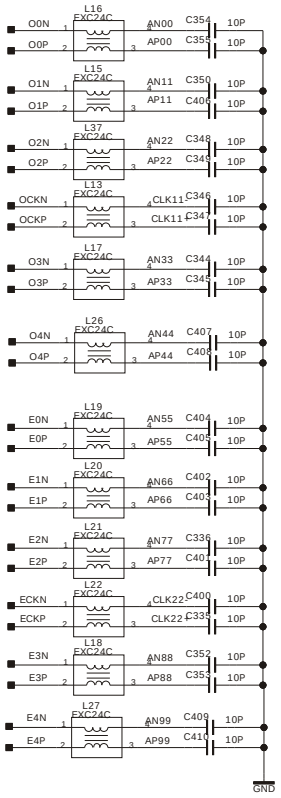
L16 EXC24C O0N O0P AN00 AP00 C354 C355 10P
L15 EXC24C O1N O1P AN11 AP11 C350 C400 10P
L37 EXC24C O2N O2P AN22 AP22 C348 C345 10P
L13 EXC24C OCKN OCKP CLK11 CLK11 C346 C347 10P
L17 EXC24C O3N O3P AN33 AP33 C344 C345 10P
L26 EXC24C O4N O4P AN44 AP44 C407 C408 10P
L19 EXC24C E0N E0P AN55 AP55 C404 C405 10P
L20 EXC24C E1N E1P AN66 AP66 C402 C403 10P
L21 EXC24C E2N E2P AN77 AP77 C336 C401 10P
L22 EXC24C ECKN ECKP CLK22 CLK22 C400 C335 10P
L18 EXC24C E3N E3P AN88 AP88 C352 C353 10P
L27 EXC24C E4N E4P AN99 AP99 C409 C410 10P
GND

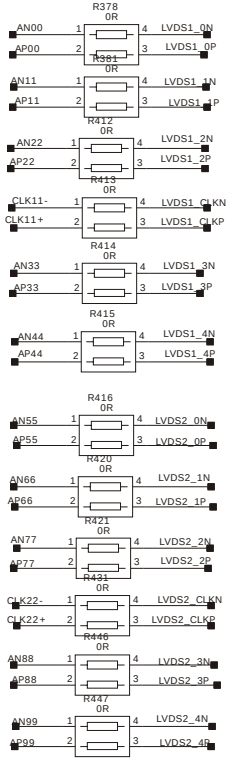
R378 0R AN00 AP00 LVDS1_0N LVDS1_0P
R381 0R AN11 AP11 LVDS1_1N LVDS1_1P
R412 0R AN22 AP22 LVDS1_2N LVDS1_2P
R413 0R CLK11- CLK11+ LVDS1_CLKN LVDS1_CLKP
R414 0R AN33 AP33 LVDS1_3N LVDS1_3P
R415 0R AN44 AP44 LVDS1_4N LVDS1_4P
R416 0R AN55 AP55 LVDS2_0N LVDS2_0P
R420 0R AN66 AP66 LVDS2_1N LVDS2_1P
R421 0R AN77 AP77 LVDS2_2N LVDS2_2P
R431 0R CLK22- CLK22+ LVDS2_CLKN LVDS2_CLKP
R446 0R AN88 AP88 LVDS2_3N LVDS2_3P
R447 0R AN99 AP99 LVDS2_4N LVDS2_4P

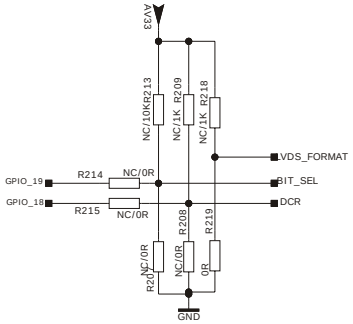
AV33
NC/10K R213
NC/1K R209
NC/1K R218
LVDS_FORMAT
GPIO_19
R214 NC/0R
BIT_SEL
GPIO_18
R215 NC/0R
DCR
R207 NC/0R
R208 NC/0R
R219 0R
GND

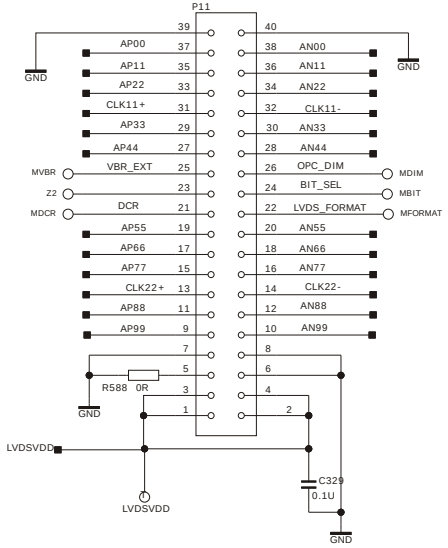
P11
AP00 AN00
AP11 AN11
AP22 AN22
CLK11+ CLK11-
AP33 AN33
AP44 AN44
MVBR VBR_EXT OPC_DIM MDIM
Z2 BIT_SEL MBIT
MDCR DCR LVDS_FORMAT MFORMAT
AP55 AN55
AP66 AN66
AP77 AN77
CLK22+ CLK22-
AP88 AN88
AP99 AN99
R588 0R
LVDSVDD
C329
0.1U
GND

New Parts

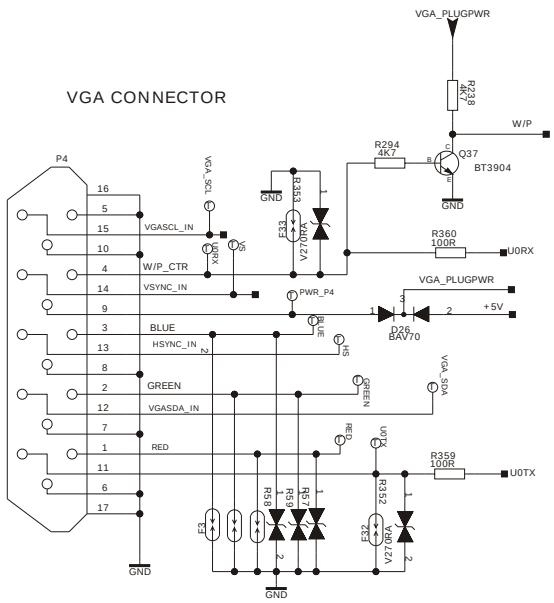
VGA CONNECTOR
P4
VGA_PLUGPWR
R238 4K7
W/P
R294 4K7
Q37 BT3904
R353
F33
V270RA
R360 100R
U0RX
VGASCL_IN
W/P_CTR
VSYNC_IN
PWR_P4
D26 BAV70
+5V
BLUE
HSYNC_IN
GREEN
VGASDA_IN
RED
R359 100R
U0TX
R58
R55
R57
R352
F3
F32
GND

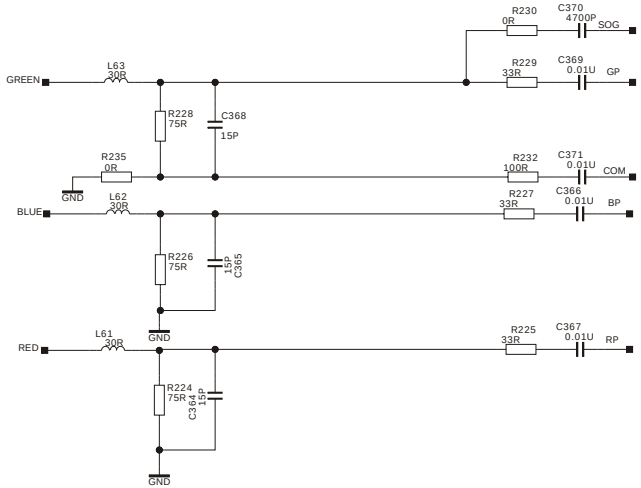
GREEN
L63 30R
R230 0R
C370 4700P
SOG
R229 33R
C369 0.01U
GP
R228 75R
C368 15P
R235 0R
R232 100R
C371 0.01U
COM
BLUE
L62 30R
R227 33R
C366 0.01U
BP
R226 75R
C365 15P
RED
L61 30R
R225 33R
C367 0.01U
RP
R224 75R
C364 15P
GND

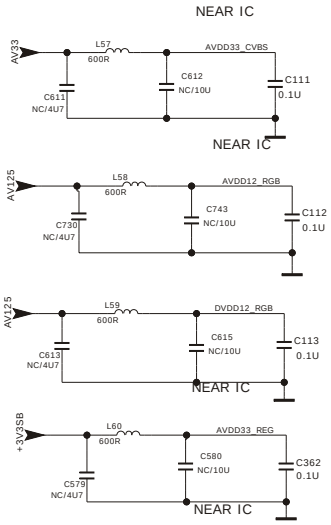
NEAR IC
AV33
L57 600R
AVDD33_CVBS
C611 NC/4U7
C612 NC/10U
C111 0.1U
NEAR IC
AV125
L58 600R
AVDD12_RGB
C730 NC/4U7
C743 NC/10U
C112 0.1U
AV125
L59 600R
DVDD12_RGB
C613 NC/4U7
C615 NC/10U
C113 0.1U
NEAR IC
+3V3SB
L60 600R
AVDD33_REG
C579 NC/4U7
C580 NC/10U
C362 0.1U
NEAR IC

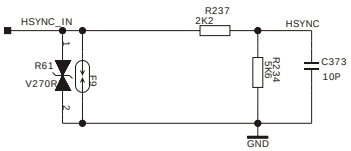
HSYNC_IN
R237 2K2
HSYNC
R61 V270RA
F8
R234 10K
C373 10P
GND

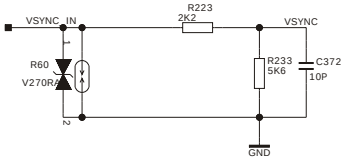
VSYNC_IN
R223 2K2
VSYNC
R60 V270RA
R233 5K6
C372 10P
GND

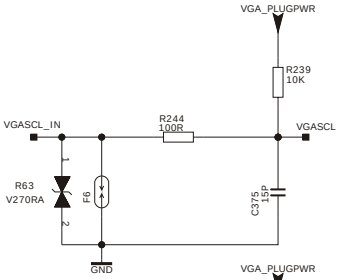
VGA_PLUGPWR
R239 10K
VGASCL_IN
R244 100R
VGASCL
R63 V270RA
F6
C375 15P
GND

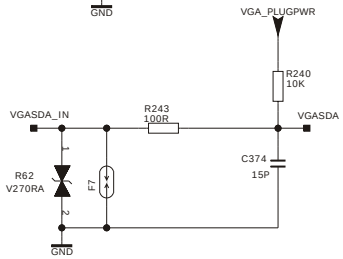
VGA_PLUGPWR
R240 10K
VGASDA_IN
R243 100R
VGASDA
C374 15P
R62 V270RA
F7
GND

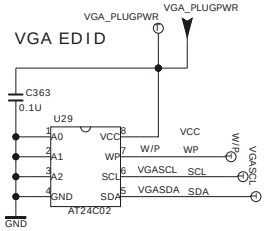
VGA EDID
VGA_PLUGPWR
C363 0.1U
U29
AT24C02
A0
A1
A2
GND
VCC
WP
SCL
SDA
W/P
VGASCL
VGASDA
GND

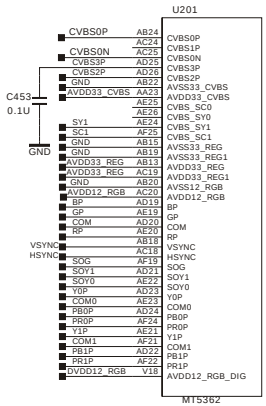
U201
C453 0.1U
GND
CVBS0P AB24 CVBS0P
AC24 CVBS1P
CVBS0N AC25 CVBS0N
CVBS3P AD25 CVBS3P
CVBS2P AD26 CVBS2P
GND AB22 AVSS33_CVBS
AVDD33_CVBS AA22 AVDD33_CVBS
AE25 CVBS_SC0
AE26 CVBS_SY0
SY1 AE24 CVBS_SY1
SC1 AF25 CVBS_SC1
GND AB15 AVSS33_REG
GND AB19 AVSS33_REG1
AVDD33_REG AB13 AVDD33_REG
AVDD33_REG AC19 AVDD33_REG1
GND AB20 AVSS12_RGB
AVDD12_RGB AC20 AVDD12_RGB
BP AD19 BP
GP AE19 GP
COM AD20 COM
RP AE20 RP
AB18
VSYNC AC18 VSYNC
HSYNC SOG AF19 HSYNC
SOG
SOY1 AD21 SOY1
SOY0 AE22 SOY0
Y0P AD23 Y0P
COM0 AE23 COM0
PB0P AD24 PB0P
PR0P AF24 PR0P
Y1P AE21 Y1P
COM1 AF21 COM1
PB1P AD22 PB1P
PR1P AF22 PR1P
DVDD12_RGB V18 AVDD12_RGB_DIG
MT5362

New Parts

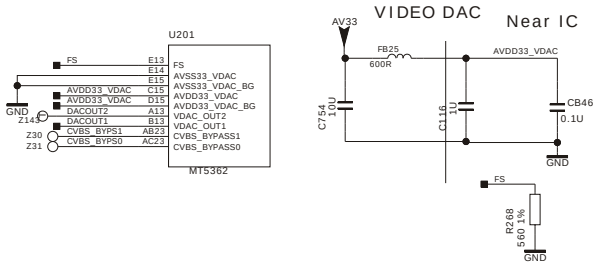
VIDEO DAC
Near IC
U201
MT5362
AV33
FB25
600R
AVDD33_VDAC
C754
10U
C116
1U
CB46
0.1U
GND
FS
R268
560 1%
Z143
Z30
Z31

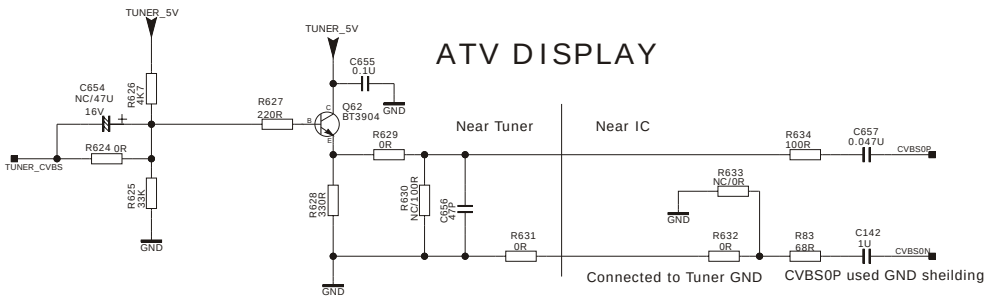
ATV DISPLAY
TUNER_5V
C654
NC/47U
16V
R626
4K7
R624 0R
R625
33K
TUNER_CVBS
R627
220R
C655
0.1U
Q62
BT3904
R629
0R
R628
330R
R630
NC/0R
C656
47P
R631
0R
Near Tuner
Near IC
R634
100R
C657
0.047U
CVBS0P
R633
NC/0R
R632
0R
R83
68R
C142
1U
CVBS0N
Connected to Tuner GND
CVBS0P used GND sheilding

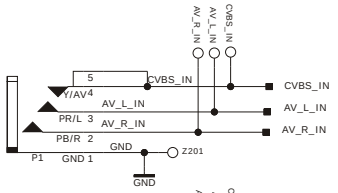
AV_R_IN
AV_L_IN
CVBS_IN
Y/AV
PR/L
PB/R
GND
P1
Z201

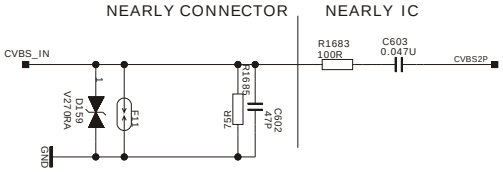
NEARLY CONNECTOR
NEARLY IC
CVBS_IN
D159
V270VA
E11
R1695
75R
C602
47P
R1683
100R
C603
0.047U
CVBS2P
GND

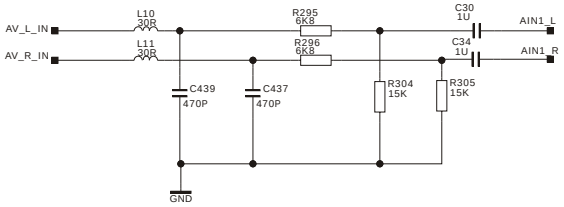
AV_L_IN
AV_R_IN
L10
30R
L11
30R
R295
6K8
R296
6K8
C30
1U
C34
1U
AIN1_L
AIN1_R
C439
470P
C437
470P
R304
15K
R305
15K
GND

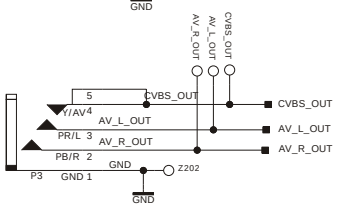
AV_R_OUT
AV_L_OUT
CVBS_OUT
Y/AV
PR/L
PB/R
GND
P3
Z202

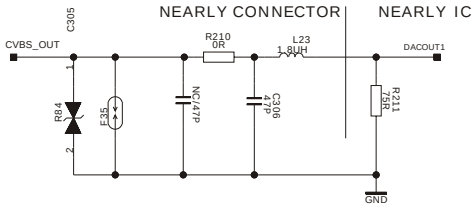
NEARLY CONNECTOR
NEARLY IC
C305
CVBS_OUT
R84
E35
NC/47P
C306
47P
R210
0R
L23
1.8UH
DACOUT1
R211
75R
GND

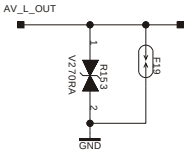
AV_L_OUT
R153
V270VA
E19
GND

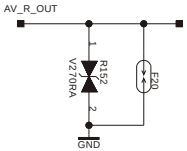
AV_R_OUT
R152
V270VA
E20
GND

New Parts

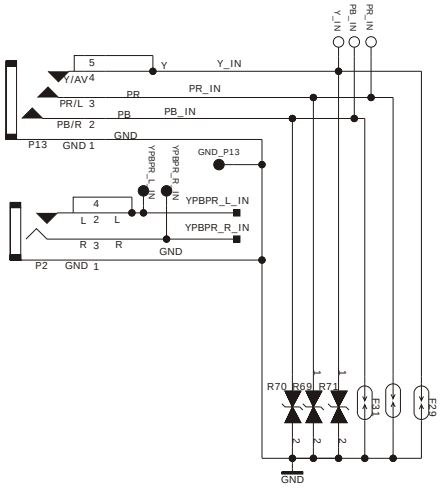
Y_IN
PB_IN
PR_IN
Y/AV
PR/L
PB/R
P13
GND
GND_P13
YPBPR_L_IN
YPBPR_R_IN
P2
R70
R69
R71
E31
E23

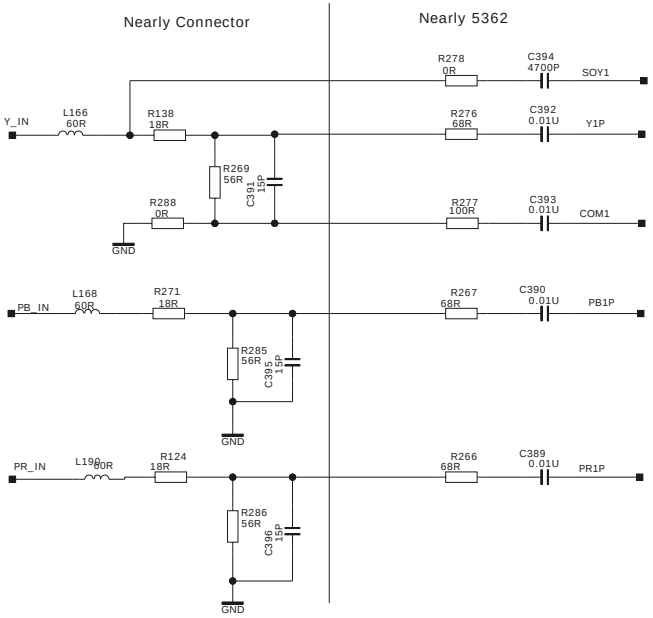
Nearly Connector
Nearly 5362
Y_IN
L166 60R
R138 18R
R269 56R
C391 15P
R288 0R
R278 0R
C394 4700P
SOY1
R276 68R
C392 0.01U
Y1P
R277 100R
C393 0.01U
COM1
PB_IN
L168 60R
R271 18R
R285 56R
C395 15P
R267 68R
C390 0.01U
PB1P
PR_IN
L190 60R
R124 18R
R286 56R
C396 15P
R266 68R
C389 0.01U
PR1P
GND

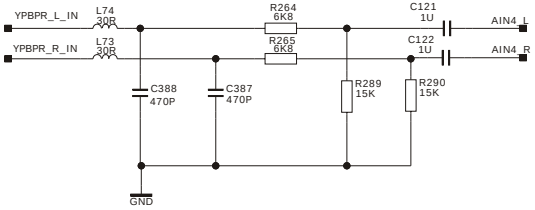
YPBPR_L_IN
YPBPR_R_IN
L74 30R
L73 30R
R264 6K8
R265 6K8
C121 1U
C122 1U
AIN4_L
AIN4_R
C388 470P
C387 470P
R289 15K
R290 15K
GND

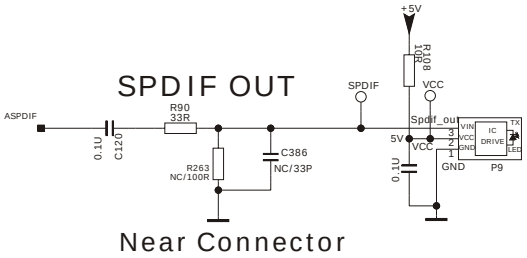
SPDIF OUT
Near Connector
ASPDIF
C120 0.1U
R90 33R
R263 NC/100R
C386 NC/33P
SPDIF
+5V
R108 10R
VCC
5V
Spdif_out
GND
P9
IC DRIVE
TX
LED

New Parts

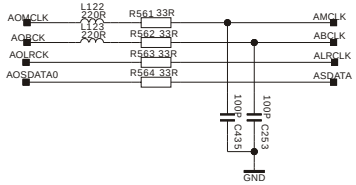

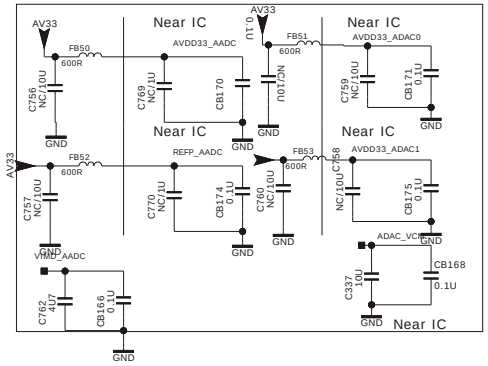

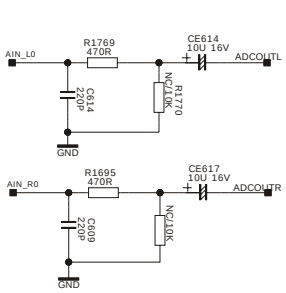

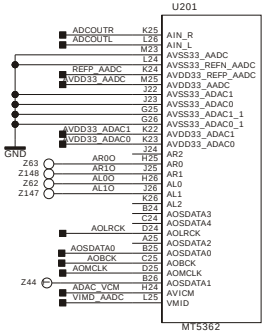

Audio output Circuit

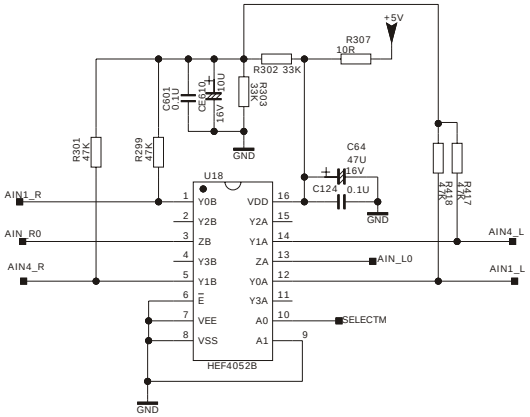

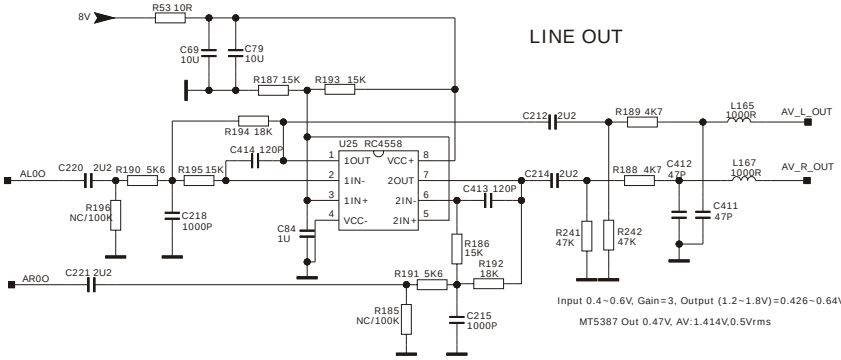

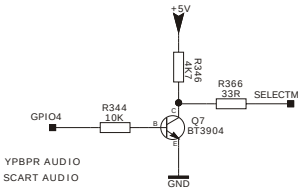

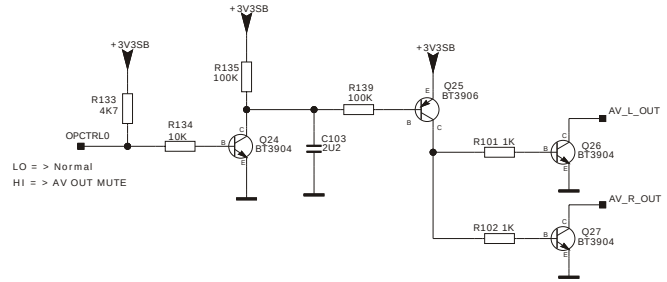

New Parts

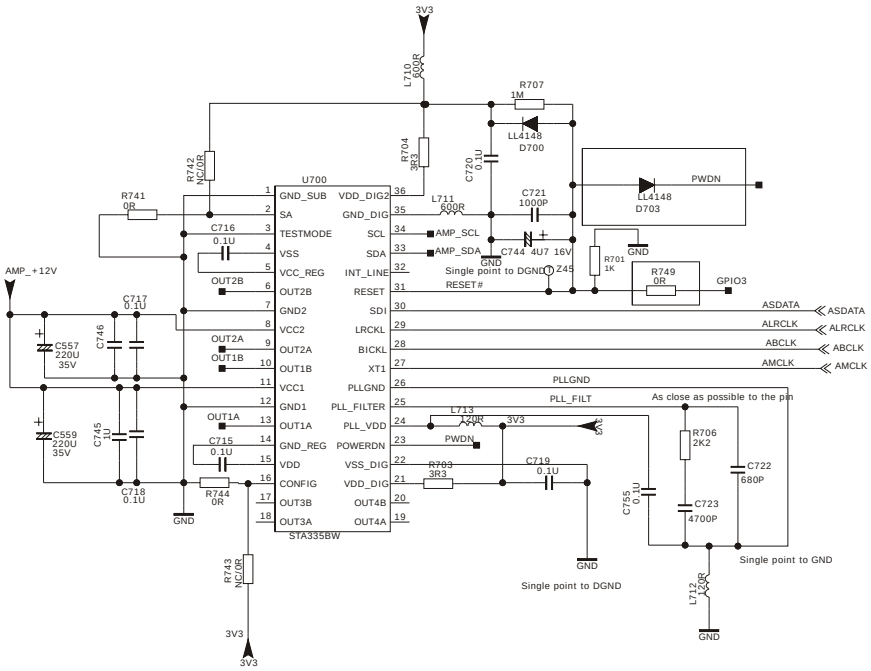

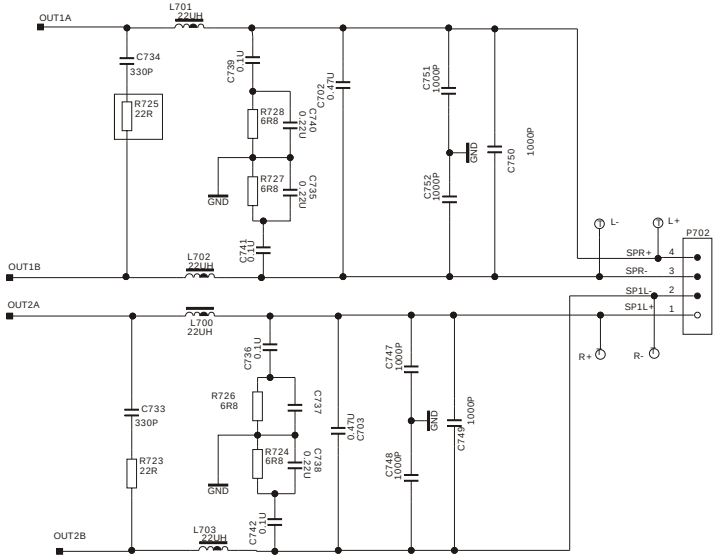

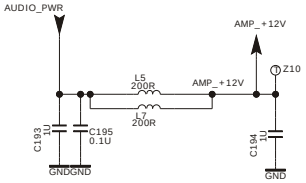

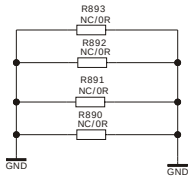

Connect AMP GND with Ground

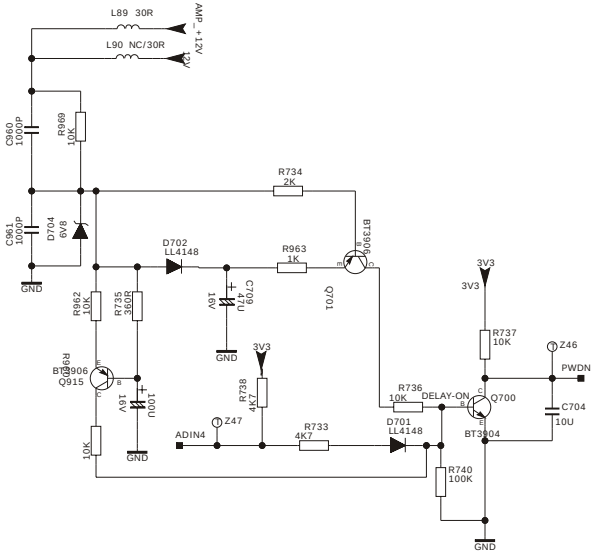

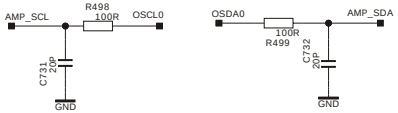

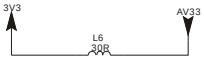

New Parts

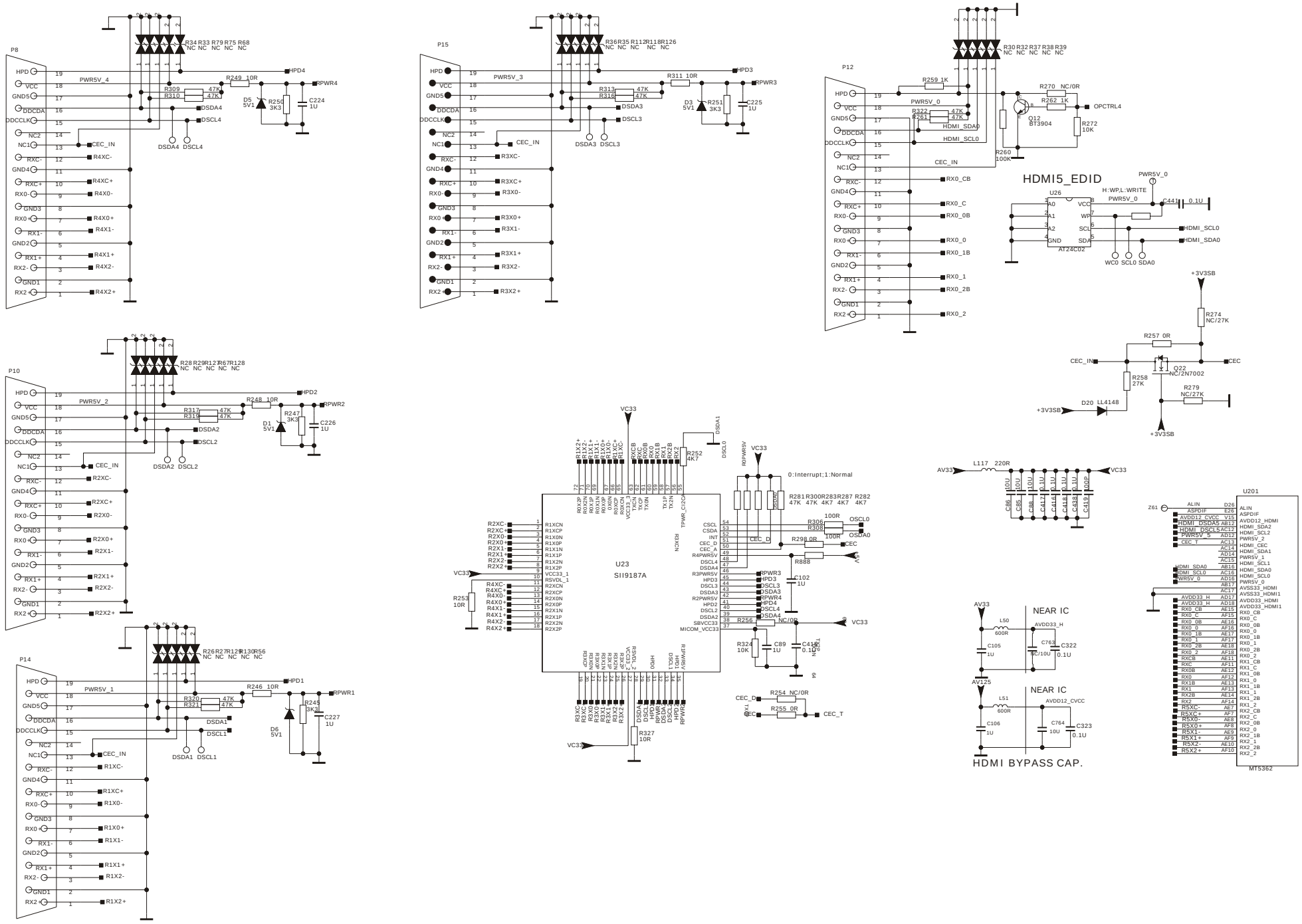
P8
P15
P12
P10
P14
HDMI5_EDID
U26
AT24C02
U23
SII9187A
U201
MT5362
HDMI BYPASS CAP.
NEAR IC
NEAR IC
New Parts

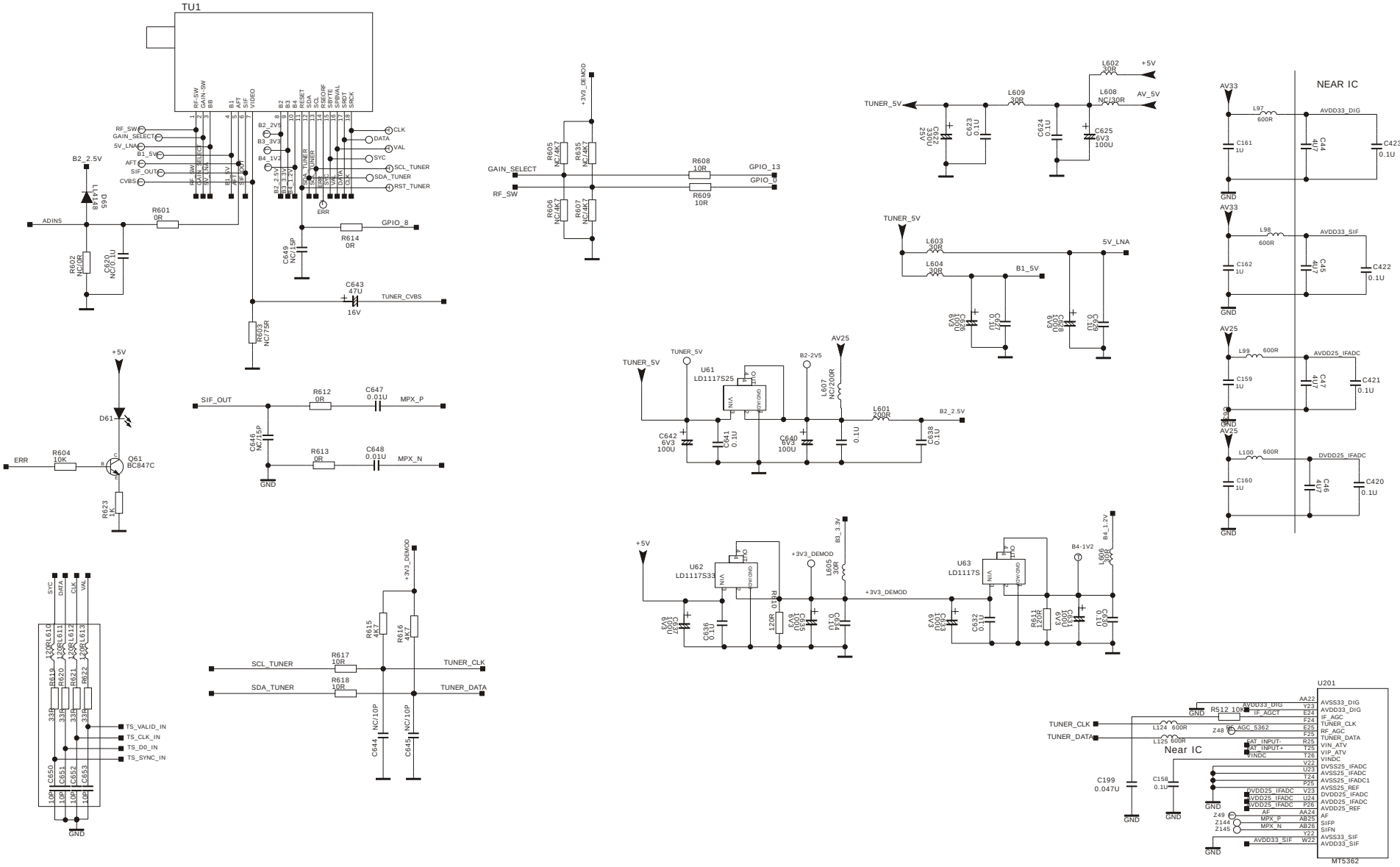
TU1
RF_SW
GAIN_SELECT
5V_LNA
B1_5V
AFT
SIF_OUT
CVBS
B2_2.5V
B3_3V3
B4_1V2
CLK
DATA
VAL
SYC
SCL_TUNER
SDA_TUNER
RST_TUNER
ADIN5
R601 0R
R602 NC/0R
C620 NC/0.1U
D65 LL4148
R603 NC/75R
C649 NC/15P
R614 0R
GPIO_8
C643 47U 16V
TUNER_CVBS
+3V3_DEMOD
R605 NC/4K7
R635 NC/4K7
R606 NC/4K7
R607 NC/4K7
R608 10R
R609 10R
GPIO_13
TUNER_5V
L602 30R
L609 30R
L608 NC/30R
+5V
AV_5V
C623 0.1U
C624 0.1U
C625 6V3 100U
L603 30R
L604 30R
5V_LNA
B1_5V
C627 0.1U
C628 6V3 100U
C629 0.1U
C630 6V3 100U
AV33
NEAR IC
L97 600R
AVDD33_DIG
C161 1U
C44 4U7
C423 0.1U
L98 600R
AVDD33_SIF
C162 1U
C45 4U7
C422 0.1U
AV25
L99 600R
AVDD25_IFADC
C159 1U
C47 4U7
C421 0.1U
L100 600R
DVDD25_IFADC
C160 1U
C46 4U7
C420 0.1U
GND
U61 LD1117S25
C642 6V3 100U
C641 0.1U
C640 6V3 100U
L607 NC/200R
L601 200R
B2_2.5V
C638 0.1U
+5V
D61
ERR
R604 10K
Q61 BC847C
R623 1K
SIF_OUT
R612 0R
C647 0.01U
MPX_P
C646 NC/15P
R613 0R
C648 0.01U
MPX_N
U62 LD1117S33
R610 120R
C631 6V3 100U
C635 6V3 100U
C636 0.1U
C637 0.1U
L605 30R
B3_3.3V
U63 LD1117S
C633 6V3 100U
C632 0.1U
R611 120R
C634 6V3 100U
C639 0.1U
B4-1V2
L606 30R
B4_1.2V
R615 4K7
R616 4K7
SCL_TUNER
SDA_TUNER
R617 10R
R618 10R
TUNER_CLK
TUNER_DATA
C644 NC/10P
C645 NC/10P
SYC
DATA
CLK
VAL
R619 120R
R620 120R
R621 120R
R622 120R
R610 120R
R611 120R
R612 120R
R613 120R
33R
C650 10P
C651 10P
C652 10P
C653 10P
TS_VALID_IN
TS_CLK_IN
TS_D0_IN
TS_SYNC_IN
U201
MT5362
Near IC
R512 10R
Z48
L124 600R
L125 600R
C199 0.047U
C158 0.1U
Z49
Z144
Z145
AVSS33_DIG
AVDD33_DIG
IF_AGC
TUNER_CLK
RF_AGC
TUNER_DATA
VIN_ATV
VIP_ATV
VINDC
DVSS25_IFADC
AVSS25_IFADC
AVSS25_IFADC1
AVSS25_REF
DVDD25_IFADC
AVDD25_IFADC
AVDD25_REF
AF
SIFP
SIFN
AVSS33_SIF
AVDD33_SIF
TS_VALID_IN B20
TS_CLK_IN A21
TS_D0_IN B21
TS_SYNC_IN C21
TS_CLK_OUT A22
TS_SYNC_OUT B22
TS_VALID_OUT B23
TS_D0_OUT A24
CI_MIVAL
CI_MCLKI
CI_MDI0
CI_MISTRT
CI_MCLKO
CI_MOSTRT
CI_MOVAL
CI_MDO0

New Parts

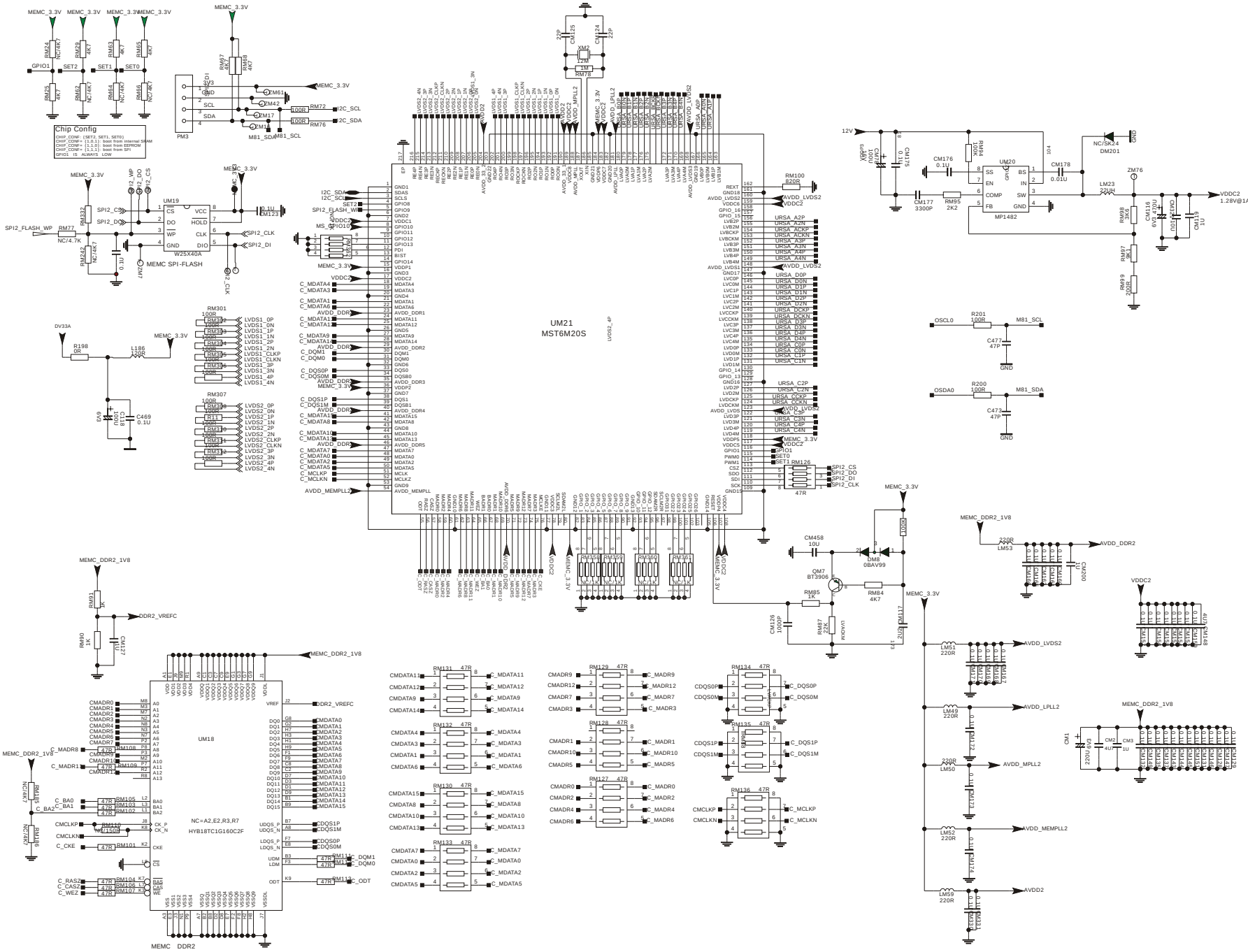
Chip Config
UM21
MST6M20S
MEMC SPI-FLASH
W25X40A
UM18
HYB18TC1G160C2F
NC=A2,E2,R3,R7
MP1482
MEMC DDR2
VDDC2
1.28V@1A
AVDD_DDR2
AVDD_LVDS2
AVDD_LPLL2
AVDD_MPLL2
AVDD_MEMPLL2
AVDD2

New Parts

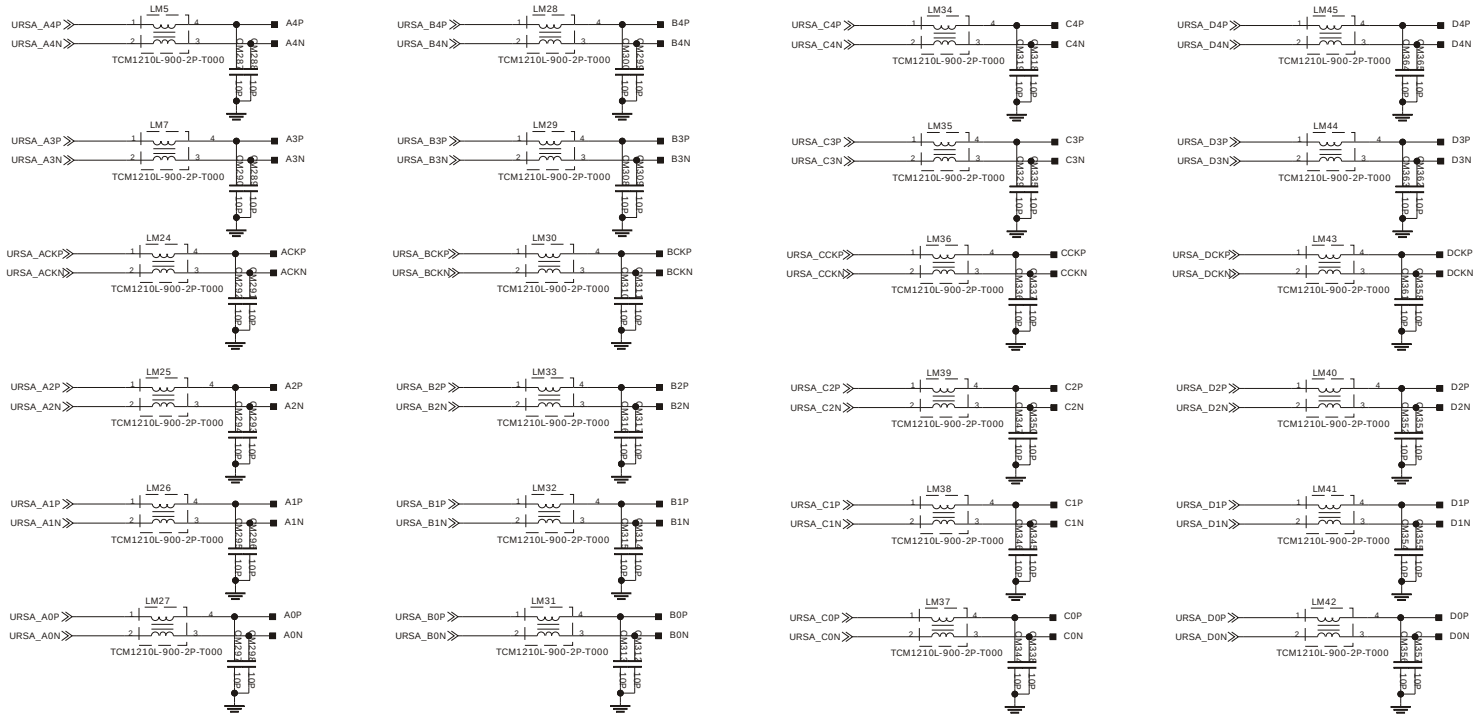
LM5 URSA_A4P URSA_A4N A4P A4N TCM1210L-900-2P-T000
LM7 URSA_A3P URSA_A3N A3P A3N TCM1210L-900-2P-T000
LM24 URSA_ACKP URSA_ACKN ACKP ACKN TCM1210L-900-2P-T000
LM25 URSA_A2P URSA_A2N A2P A2N TCM1210L-900-2P-T000
LM26 URSA_A1P URSA_A1N A1P A1N TCM1210L-900-2P-T000
LM27 URSA_A0P URSA_A0N A0P A0N TCM1210L-900-2P-T000
LM28 URSA_B4P URSA_B4N B4P B4N TCM1210L-900-2P-T000
LM29 URSA_B3P URSA_B3N B3P B3N TCM1210L-900-2P-T000
LM30 URSA_BCKP URSA_BCKN BCKP BCKN TCM1210L-900-2P-T000
LM33 URSA_B2P URSA_B2N B2P B2N TCM1210L-900-2P-T000
LM32 URSA_B1P URSA_B1N B1P B1N TCM1210L-900-2P-T000
LM31 URSA_B0P URSA_B0N B0P B0N TCM1210L-900-2P-T000
LM34 URSA_C4P URSA_C4N C4P C4N TCM1210L-900-2P-T000
LM35 URSA_C3P URSA_C3N C3P C3N TCM1210L-900-2P-T000
LM36 URSA_CCKP URSA_CCKN CCKP CCKN TCM1210L-900-2P-T000
LM39 URSA_C2P URSA_C2N C2P C2N TCM1210L-900-2P-T000
LM38 URSA_C1P URSA_C1N C1P C1N TCM1210L-900-2P-T000
LM37 URSA_C0P URSA_C0N C0P C0N TCM1210L-900-2P-T000
LM45 URSA_D4P URSA_D4N D4P D4N TCM1210L-900-2P-T000
LM44 URSA_D3P URSA_D3N D3P D3N TCM1210L-900-2P-T000
LM43 URSA_DCKP URSA_DCKN DCKP DCKN TCM1210L-900-2P-T000
LM40 URSA_D2P URSA_D2N D2P D2N TCM1210L-900-2P-T000
LM41 URSA_D1P URSA_D1N D1P D1N TCM1210L-900-2P-T000
LM42 URSA_D0P URSA_D0N D0P D0N TCM1210L-900-2P-T000

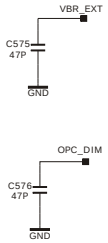
VBR_EXT
C575 47P
GND
OPC_DIM
C576 47P
GND

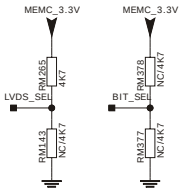
MEMC_3.3V
RM265 4K7
LVDS_SEL
RM143 NC/4K7
MEMC_3.3V
RM378 NC/4K7
BIT_SEL
RM377 NC/4K7

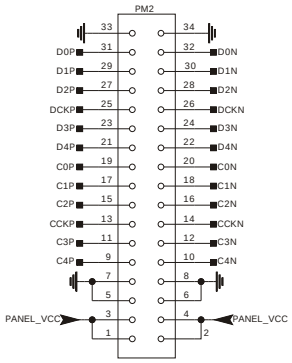
PM2
D0P D1P D2P DCKP D3P D4P C0P C1P C2P CCKP C3P C4P
D0N D1N D2N DCKN D3N D4N C0N C1N C2N CCKN C3N C4N
PANEL_VCC
PANEL_VCC

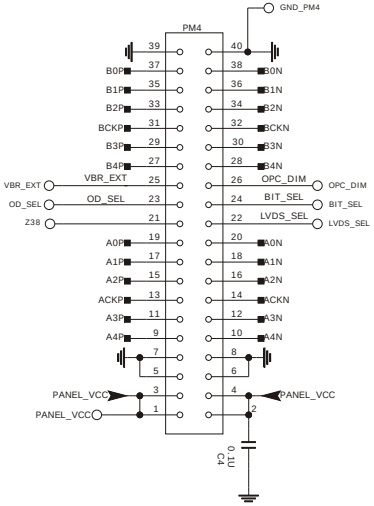
GND_PM4
PM4
B0P B1P B2P BCKP B3P B4P VBR_EXT OD_SEL Z38 A0P A1P A2P ACKP A3P A4P
B0N B1N B2N BCKN B3N B4N OPC_DIM BIT_SEL LVDS_SEL A0N A1N A2N ACKN A3N A4N
VBR_EXT
OD_SEL
BIT_SEL
LVDS_SEL
PANEL_VCC
PANEL_VCC
PANEL_VCC
PANEL_VCC
0.1U C4

New Parts