TOSHIBA

SERVICE MANUAL

LCD Color Television

40XF355D

Ver. 2.01

This model is classified as a green product (*1), as indicated by the underlined serial number. This Service Manual describes replacement parts for the green product. When repairing this green product, use the part(s) described in this manual and lead-free solder (*2).
For (*1) and (*2), refer to **GREEN PRODUCT PROCUREMENT** and **LEAD-FREE SOLDER**.

© TOSHIBA CORPORATION

IMPORTANT NOTICE

WARNING:

You are requested that you shall not modify or alter the information or data provided herein without prior written consent by Toshiba. Toshiba shall not be liable to anybody for any damages, losses, expenses or costs, if any, incurred in connection with or as a result of such modification or alteration.

THE INFORMATION OR DATA HEREIN SHALL BE PROVIDED "AS IS" WITHOUT ANY WARRANTY OF ANY KIND, EITHER EXPRESS OR IMPLIED WARRANTY OF MERCHANTABILITY AND FITNESS FOR A PARTICULAR PURPOSE.

Toshiba shall not be liable for any damages, losses, expenses or costs, if any, incurred in connection with or as a result of use of any information or data provided herein.

IMPORTANT NOTICE

User's Guide

Contents:

Install Autodesk DWF Viewer

Internet Explorer Settings

Operating Environment

Functions Provided on Each Drawing Page

Using with Network

Install Autodesk DWF Viewer

Autodesk DWF Viewer is necessary to view drawings and to activate the functions of this system. Ple download and install.

Internet Explorer Settings

When **Windows XP SP2** or **Windows Vista** is used, ActiveX control and pop-up windows are limite the enhanced security function and this system may not work. In that case, perform the Internet Explorer setting using the following procedure to restore normal operation.

1. Windows version check

[My Computer (right-click)] - [Properties]

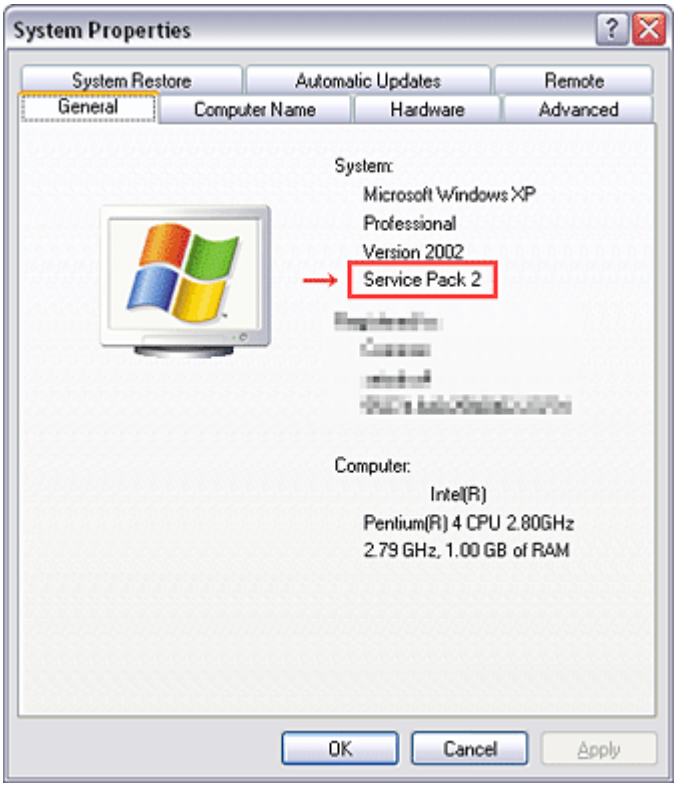

2. Internet Explorer setting
   [Tools] - [Internet Options]

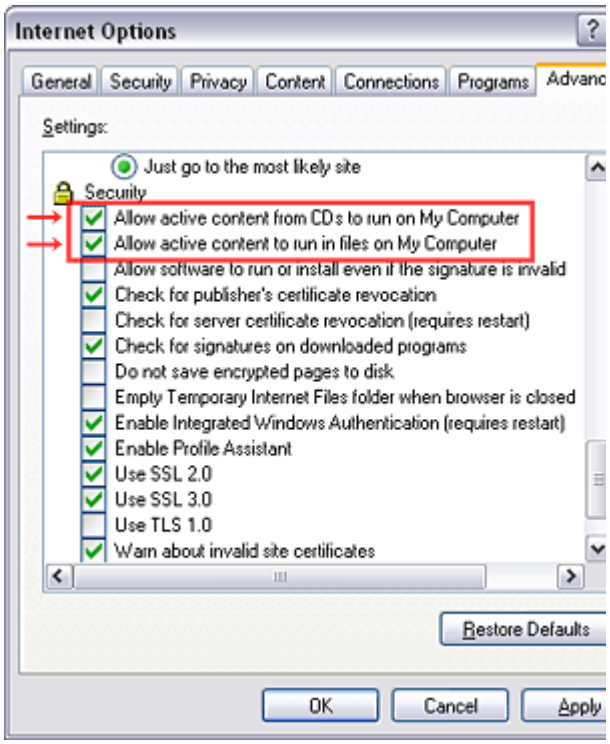

for Internet Explorer 7

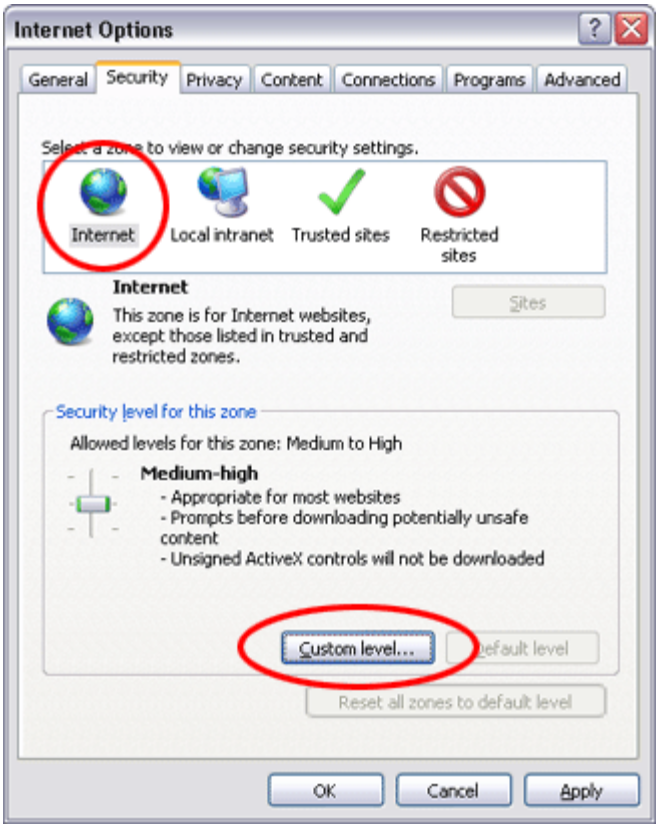

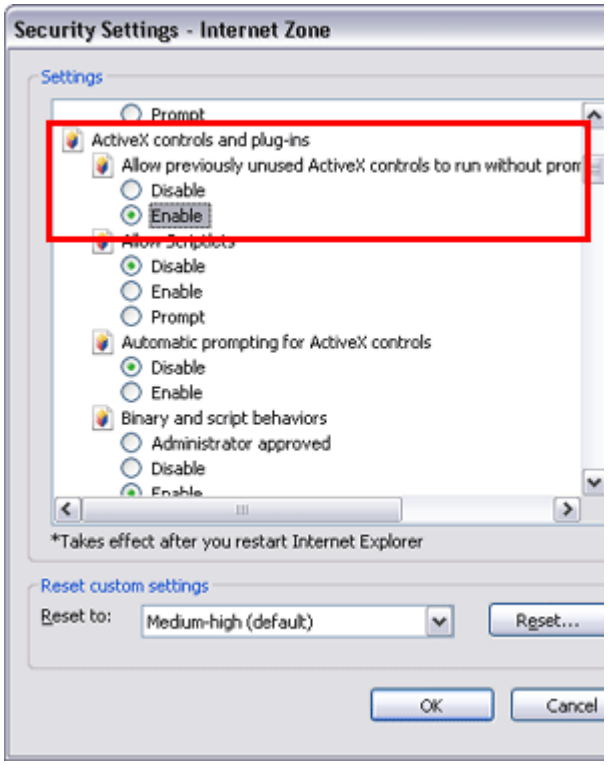

for Windows Vista

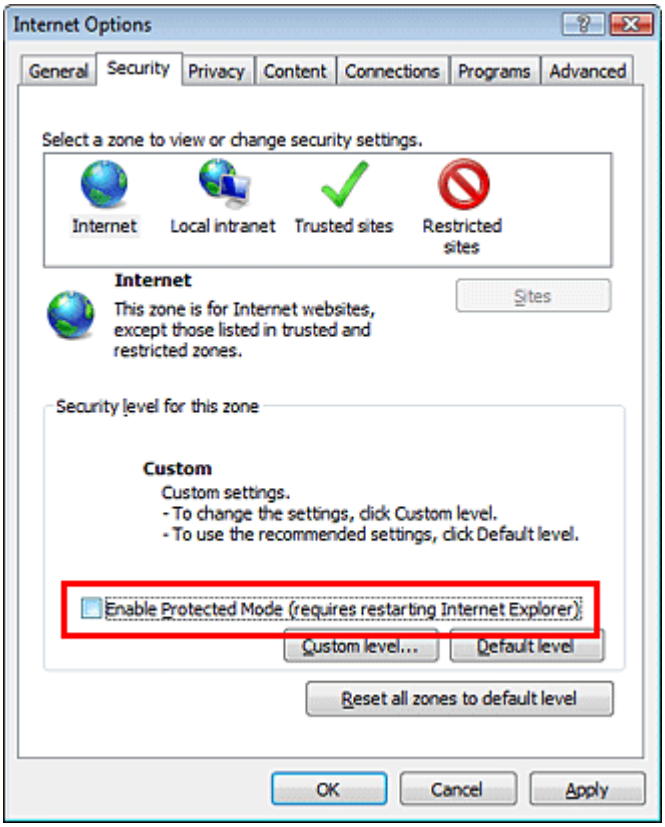

Operating Environment

PC	:	Pentium III or higher recommended
Monitor	:	1024 x 768 or higher resolution recommended
Mouse	:	A mouse with wheel recommended
OS	:	Microsoft Windows 2000 SP4 / XP / Vista
Browser	:	Microsoft Internet Explorer 6.0 / 7.0
Drawing viewer	:	Autodesk DWF Viewer 6.0 / 7.0

* Use the software following respective license terms and conditions.

Functions Provided on Each Drawing Page

Parts Information Reference Function

When the character string of a part on the drawing is clicked, its information is popped up at the location. You can get any parts information immediately on the screen without referring to the maintenance parts l

Parts Search Function

You can search any part within the displayed drawing or within the whole schematic diagram/board view specifying a location number. The pop-up window displayed by clicking a part 's character string allows t search the part within the applicable schematic diagram, board view or spare parts list.

A circle appears when the part is found, showing the part's location within the drawing.

Signal Line/Connector Destination Display Function

When a name at the end of a signal line in a divided schematic diagram is clicked, the destination of the signal is searched and the display changes to the destination. Connecter destinations can also be searched the same way.

When two or more search results are provided, their drawing names are displayed, allowing you to choos desired drawing to display.

Layer Display Changing Function

When any of the color buttons on the toolbar is clicked, it can be selected to display desired layer in its co or not to display each layer. This allows you to see the pattern layer only by setting other layers to "non-display".

PC Board View Pattern Highlighting Function

When a pattern on a board view is clicked, it is highlighted in green. This allows easy pattern tracing.

Specified Area Printing Function

The Autodesk DWF Viewer enables to print the displayed drawing region as it is on a printer. It also allo to print a large-sized drawing in multiple pieces (tile printing).

Using with Network

PRECAUTION

To use ZEUS Service Manual Ver.2 with network, the file-path names written on the source files of each ZEUS Engine Program Ver.2 and ZEUS Service Manual Ver.2 are to be modified.
Perform the procedure described below.

Preparation

1. Run the program file zuesFPch.exe to install the program file for File-Path to the Local PC.

   -> Download zeusFPch_setup.zip (2.3MB)

2. Run the program file ZeusSetup_v2.0.exe to install the ZEUS Engine Program in C:\Program Files\zeus of the local PC. This can be done by running the installer program provided.

3. Create the appropriate folder where the ZEUS Engine Program Ver.2 and the ZEUS Service Manua Ver.2 to be stored in the server.

4. Move the ZEUS Engine Program of step 2 to the folder created at step 3 in the Server.

5. Detach the ZEUS Service Manual Ver.2 to the folder created at step 3 in the Server.

6. Unzip the ZEUS Service Manual Ver.2 within the folder in the Server.

   Example of folder

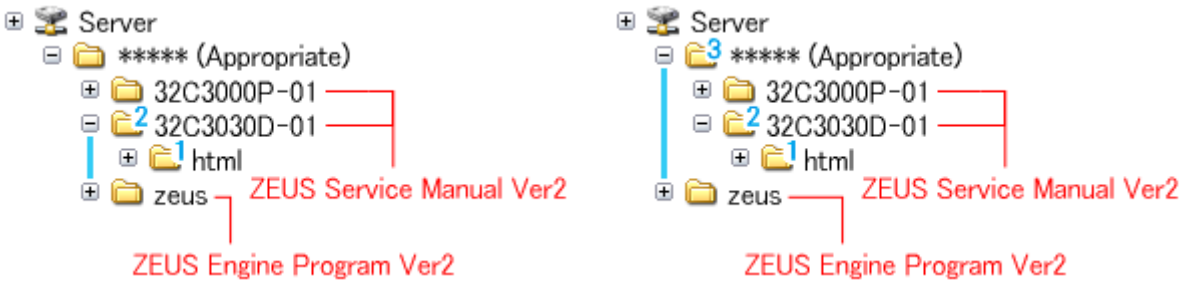

Procedure of File-Path

The zeusFPch is the exclusive program to exchange the file-path names written in both source files of ZE Manual and ZEUS Engine program into those applicable to the network use.

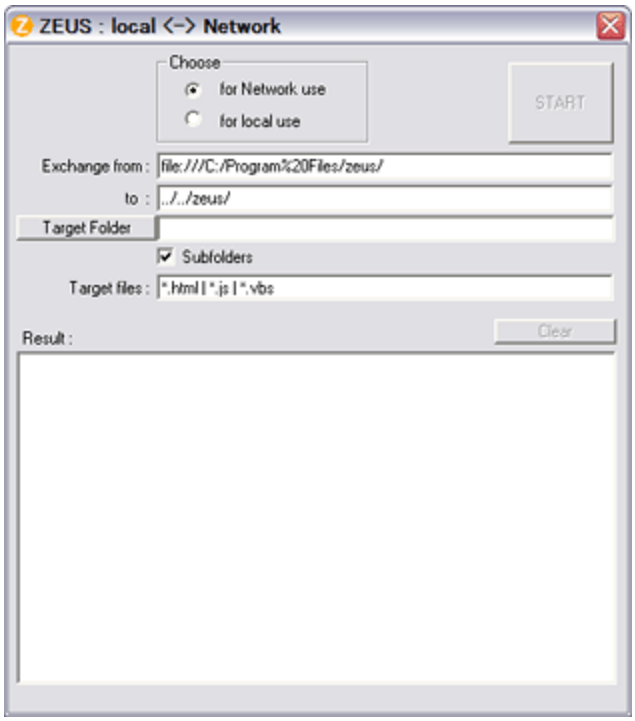

1. Whenever changing the file-path of both ZEUS Engine Program and ZEUS Service Manual to use network, pay the attention to set the "Exchange to" column that should have a proper relation betw ZEUS Engine Program and ZEUS Service Manual with referring the following.

Run the zeusFPch and set "Exchange to" by referring to the examples below.

Example 1 :

In the "Exchange to" column shows the relation between ZEUS Service Manual and ZEUS Engine Program.

../ counts the relation between.

Thus in this case, it must be **../../zeus/** (2 counts).

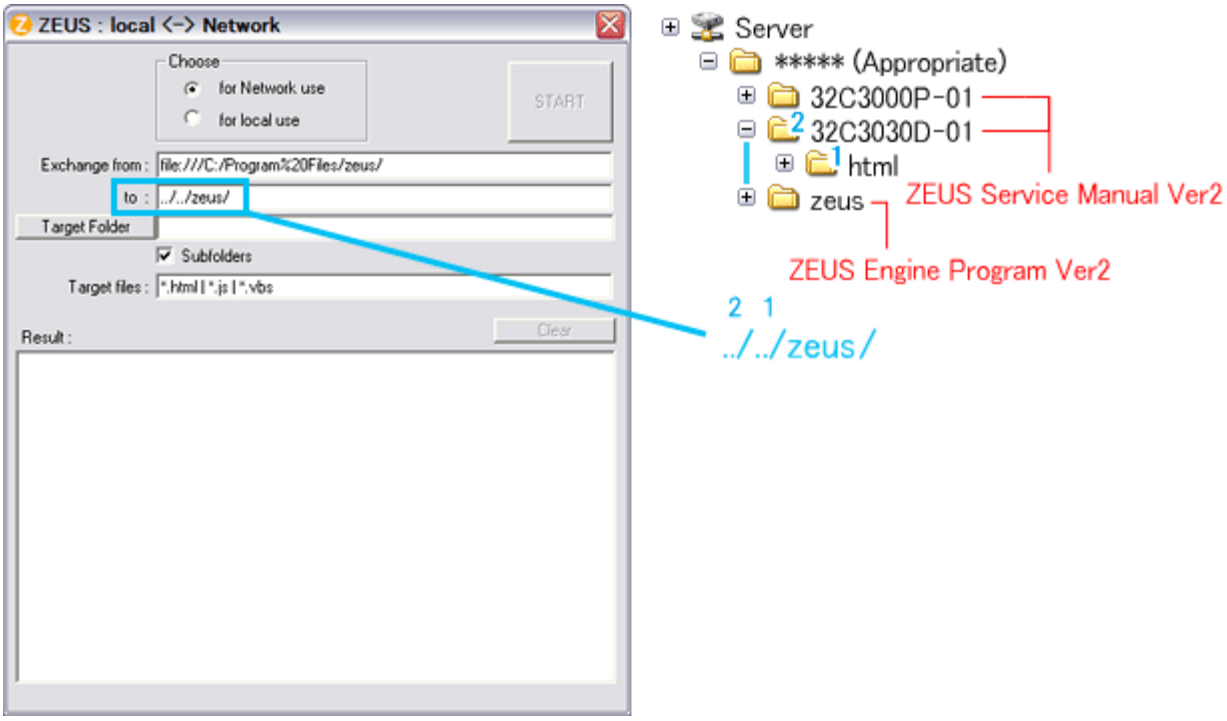

Example 2 :

In this case, it must be **../../../zeus/** (3 counts).

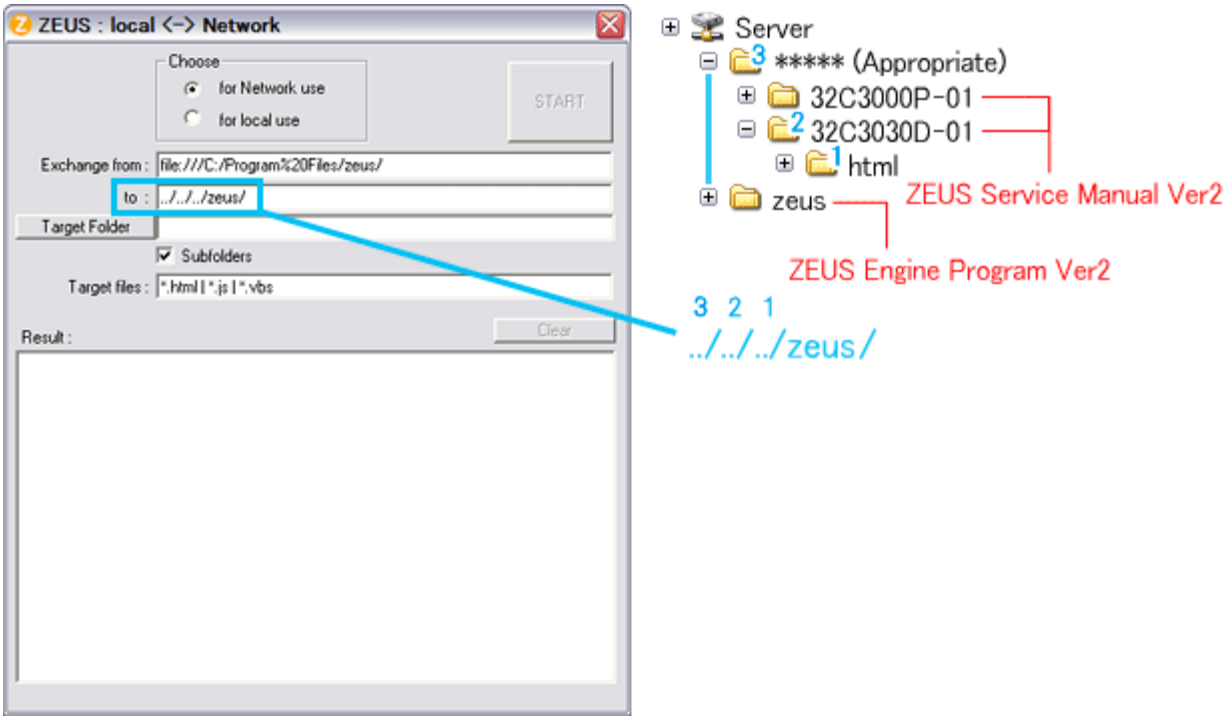

2. Run the zeusFPch to change the path in the ZEUS Engine Program Ver.2.

3. Set ZEUS Engine Program in the created folder in the server to the "Target Folder", and then press "START".
   (This procedure is one time only)

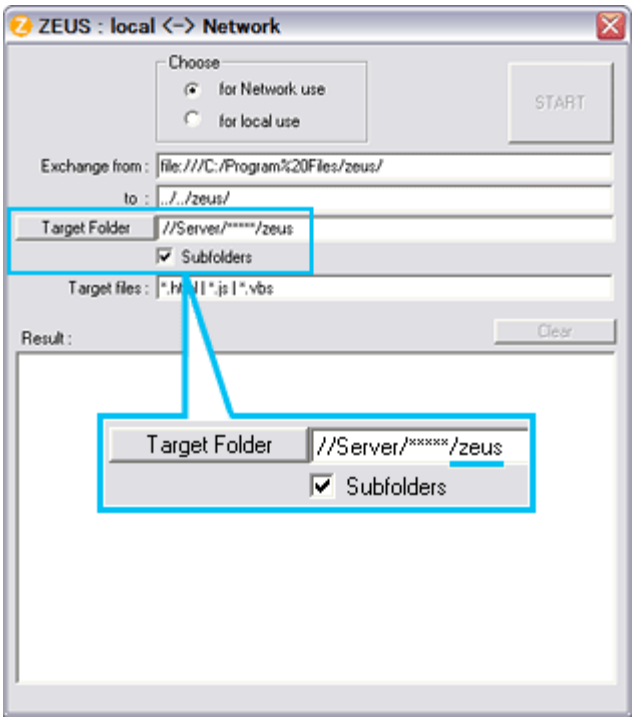

4. Run the ZeusFPch to change the path in the ZEUS Service Manual Ver2.

5. Set unzipped ZEUS Service Manual in the created folder in the server to the "Target Folder", and tl press "START".
   (This procedure is required whenever placing service manual.)

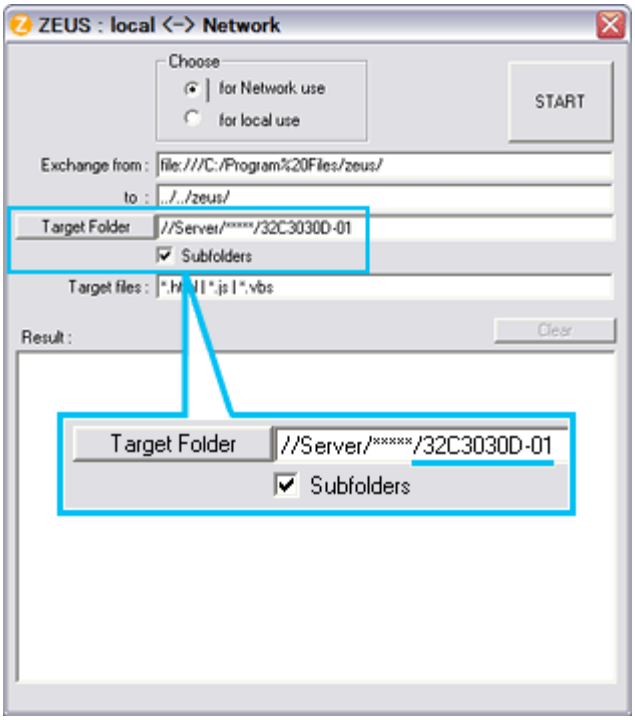

Confirmation

Confirm that service manual on the server can be operated normally by client PC.

Note:

In case of accessing the ZEUS Manual through WEB site, the small pop-up window appears at the left bottom corner on the screen whenever searching the location links. This is not malfunction.

IMPORTANT NOTICE

A Known Malfunction

Autodesk® DWF™ Viewer version (Free software provided through WEB)

Use Autodesk DWF Viewer ver. 6.0.
Through WEB, ver. 6.5 has been released but with it, the linking function in this manual may not work properly.
If ver. 6.5 has been installed, uninstall it and reinstall ver. 6.0.

To get ver. 6.0, click the icon, or contact to the nearest Toshiba Service Centre for further assistance.

Freezing windows opened (Cannot close the open windows)

This may happen occasionally.
In case of encountering this, follow the procedure below.

1. Press [Ctrl], [Alt] and [Delete] keys at the same time to engage windows security windows.
2. Then, choose TASK manager and Application tab, and select TOSHIBA SERVICE MANUAL-Microsoft Internet Explorer.
3. Click TASK-end.

Main Window back forwarded

The real cause has not been found yet but with this condition, nothing disturbs the service manual operation.
Continue to use by operating the windows.

Precaution when opening the diagrams

While opening the diagrams, the menu in the left frame changes its color to GRAY. This is an indication that the viewer is processing.

With this condition, the menu indication color may stick to the GRAY color or Windows may freeze if clicking other menu.

To avoid such things, do not operate any others while menu turns GRAY color.

If entering this, re-open the service manual or refresh the left frame.

GREEN PRODUCT PROCUREMENT

The EC is actively promoting the WEEE & RoHS Directives that define standards for recycling and reuse of Waste Electrical and Electronic Equipment and for the Restriction of the use of certain Hazardous Substances. From July 1, 2006, the RoHS Directive will prohibit any marketing of new products containing the restricted substances.

Increasing attention is given to issues related to the global environmental. Toshiba Corporation recognizes environmental protection as a key management tasks, and is doing its utmost to enhance and improve the quality and scope of its environmental activities. In line with this, Toshiba proactively promotes Green Procurement, and seeks to purchase and use products, parts and materials that have low environmental impacts.

Green procurement of parts is not only confined to manufacture. The same green parts used in manufacture must also be used as replacement parts.

LEAD-FREE SOLDER

This product is manufactured using lead-free solder as a part of a movement within the consumer products industry at large to be environmentally responsible. Lead-free solder must be used in the servicing and repair of this product.

WARNING: This product is manufactured using lead free solder.
DO NOT USE LEAD BASED SOLDER TO REPAIR THIS PRODUCT!

The melting temperature of lead-free solder is higher than that of leaded solder by 86ºF to 104ºF (30ºC to 40ºC). Use of a soldering iron designed for lead-based solders to repair product made with lead-free solder may result in damage to the component and or PCB being soldered. Great care should be made to ensure high-quality soldering when servicing this product especially when soldering large components, through-hole pins, and on PCBs as the level of heat required to melt lead-free solder is high.

SAFETY INSTRUCTION

WARNING: BEFORE SERVICING THIS CHASSIS, READ THE "SAFETY PRECAUTION" AND "PRODUCT SAFETY NOTICE" INSTRUCTIONS BELOW.

Safety Precaution

WARNING: SERVICING SHOULD NOT BE ATTEMPTED BY ANYONE UNFAMILIAR WITH THE NECESSARY PRECAUTIONS ON THIS RECEIVER. THE FOLLOWING ARE THE NECESSARY PRECAUTIONS TO BE OBSERVED BEFORE SERVICING THIS CHASSIS.

1. An isolation transformer should be connected in the power line between the receiver and the AC line before any service is performed on the receiver.

2. Always disconnect the power plug before any disassembling of the product. It may result in electrical shock.

3. When replacing a chassis in the cabinet, always be certain that all the protective devices are put back in place, such as nonmetallic control knobs, insulating covers, shields, isolation resistor-capacitor network, etc.

4. Always keep tools, components of the product, etc away from the children, These items may cause injury to children.

5. Depending on the model, use an isolation transformer or wear suitable gloves when servicing with the power on, and disconnect the power plug to avoid electrical shock when replacing parts. In some cases, alternating current is also impressed in the chassis, so electrical shock is possible if the chassis is contacted with the power on.

6. Always use the replacement parts specified for the particular model when making repairs. The parts used in products require special safety characteristics such as inflammability, voltage resistance, etc. therefore, use only replacement parts that have these same characteristics. Use only the specified parts when the ⚠ mark is indicated in the circuit diagram or parts list.

7. Parts mounting and routing dressing of wirings should be the same as that used originally. For safety purposes, insulating materials such as isolation tube or tape are sometimes used and printed circuit boards are sometimes mounted floating. Also make sure that wirings is routed and clamped to avoid parts that generate heat and which use high voltage. Always follow the manufactured wiring routes / dressings.

8. Always ensure that all internal wirings are in accordance before re-assembling the external casing after a repairing completed. Do not allow internal wiring to be pinched by cabinets, panels, etc. Any error in reassembly or wiring can result in electrical leakage, flame, etc., and may be hazardous.

9. NEVER remodel the product in any way. Remodeling can result in improper operation, malfunction, or electrical leakage and flame, which may be hazardous.

10. Touch current check. (After completing the work, measure touch current to prevent an electric shock.)

    - Plug the AC cord directly into the AC outlet. Do NOT use an isolation transformer for this check.
    - Connect a measuring network for touch currents between each exposed metallic part on the set and a good earth ground such as a water pipe.

Annex D
(normative)

Measuring network for TOUCH CURRENTS

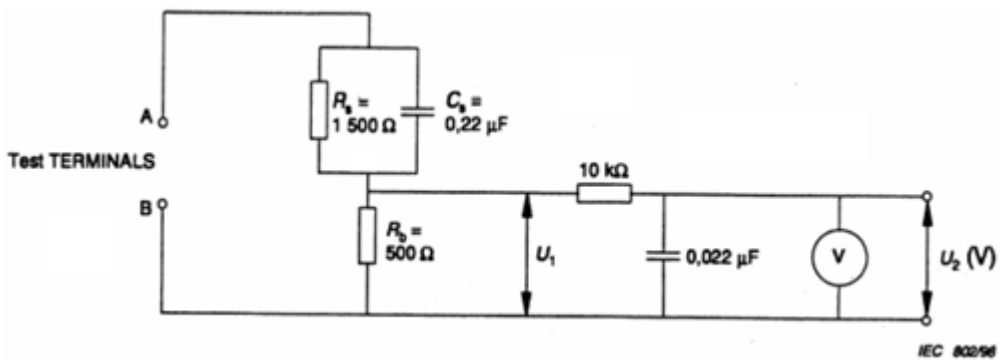

Resistance values in orms (Ω).

V: Voltmeter or oscilloscope
(r.m.s. or peak reading)

Input resistance : $\geqq$ 1 MΩ
Input capacitance : $\leqq$ 200 pF
Frequency range : 15 Hz to 1 MHz and d.c. respectively

Note: Appropriate measures should be taken to obtain the correct value in case of non sinusoidal waveforms.

The measuring instrument is calibrated by comparing the frequency factor of U_2 with the solid line in figure F.2 of IEC 60990 at various frequencies. A calibration curve is constructed showing the deviation of U_2 from the ideal curve as a function of frequency.

TOUCH CURRENT = U_2/500 (peak value).

- The potential at any point (TOUCH CURRENT) expressed as voltage U_1 and U_2 does not exceed the following value:

The part or contact of a TERMINAL is not HAZARDOUS LIVE if:

a) The open-circuit voltage should not exceed 35 V (peak) a.c. or 60 V d.c. or, if a) is not met.
b) The measurement of the TOUCH CURRENT shall be carried out in accordance with IEC 60990, with the measuring network described in **Annex D** of this standard.

The TOUCH CURRENT expressed as voltages U_1 and U_2, does not exceed the following values:
- for a.c. : U_1 = 35 V (peak) and U_2 = 0.35 V (peak);

- for d.c. : U_1 = 1.0 V

Note: The limit values of U_2 = 0.35 V (peak) for a.c. and U_1 = 1.0 V for d.c. correspond to the values 0.7 mA (peak) a.c. and 2.0 mA d.c.

Product Safety Notice

Many electrical and mechanical parts in this chassis have special safety-related characteristics. These characteristics are often passed unnoticed by a visual inspection and the protection afforded by them cannot necessarily be obtained by using replacement components rated for higher voltage, wattage, etc. Replacement parts which have these special safety characteristics are identified in this manual and its supplements; electrical components having such features are identified by the international hazard symbols on the schematic diagram and the parts list.
Before replacing any of these components, read the parts list in this manual carefully. The use of substitute replacement parts which do not have the same safety characteristics as specified in the parts list may create electrical shock, fire, or other hazards.

SAFETY INSTRUCTION

Handling the LCD Module

Safety Precaution

In the event that the screen is damaged or the liquid crystal (fluid) leaks, do not breathe in or drink this fluid.
Also, never touch this fluid. Such actions could cause toxicity or skin irritation. If this fluid should enter the mouth, rinse the mouth thoroughly with water. If the fluid should contact the skin or clothing, wipe off with alcohol, etc., and rinse thoroughly with water. If the fluid should enter the eyes, immediately rinse the eyes thoroughly with running water.

Precautions for Handling the LCD Module

CAUTION: The metal edges of the LCD module are sharp, handle it with care.

The LCD module can easily be damaged during disassembly or reassembly; therefore, always observe the following precautions when handling the module.

1. When attaching the LCD module to the LCD cover, position it appropriately and fasten at the position where the display can be viewed most conveniently.

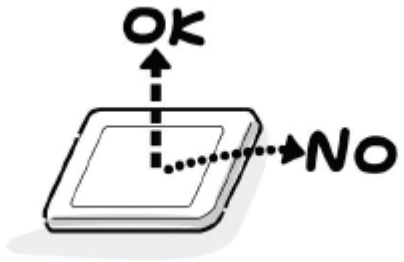

2. Carefully align the holes at all four corners of the LCD module with the corresponding holes in the LCD cover and fasten with screws. Do not strongly push on the module

because any impact can adversely affect the performance. Also use caution when handling the polarized screen because it can easily be damaged.

3. If the panel surface becomes soiled, wipe with cotton or a soft cloth. If this does not remove the soiling, breathe on the surface and then wipe again.
   If the panel surface is extremely solied, use a CRT cleaner as a cleaner. Wipe off the panel surface by drop the cleaner on the cloth. Do not drop the cleaner on the panel. Pay attention not to scratch the panel surface.

4. Leaving water or other fluids on the panel screen for an extended period of time can result in discoloration or stripes. Immediately remove any type of fluid from the screen.

5. Glass is used in the panel, so do not drop or strike with hard objects. Such actions can damage the panel.

6. CMOS-LSI circuitry is used in the LCD module, so avoid damage due to static electricity. When handling the module, use a wrist ground or anchor ground.

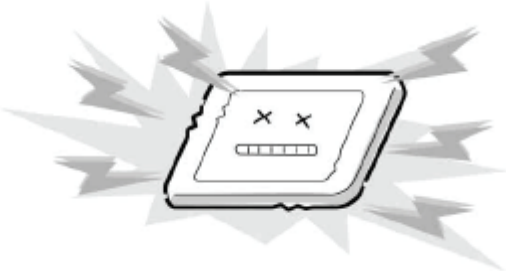

7. Do not expose the LCD module to direct sunlight or strong ultraviolet rays for an extended period of time.

8. Do not store the LCD module below the temperature conditions described in the specifications. Failure to do so could result in freezing of the liquid crystal due to cold air or loss of resilience or other damage.

9. Do not disassemble the LCD module. Such actions could result in improper operation.

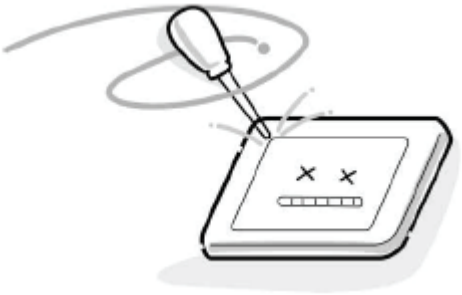

10. When transporting the LCD module, do not use packing containing epoxy resin (amine) or silicon resin (alcohol or oxim). The gas generated by these materials can cause loss of polarity.

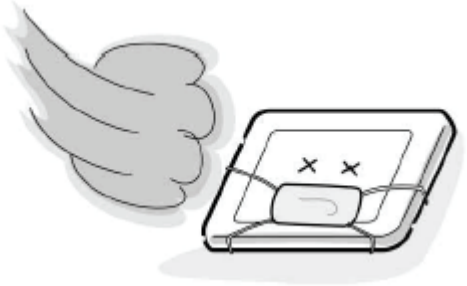

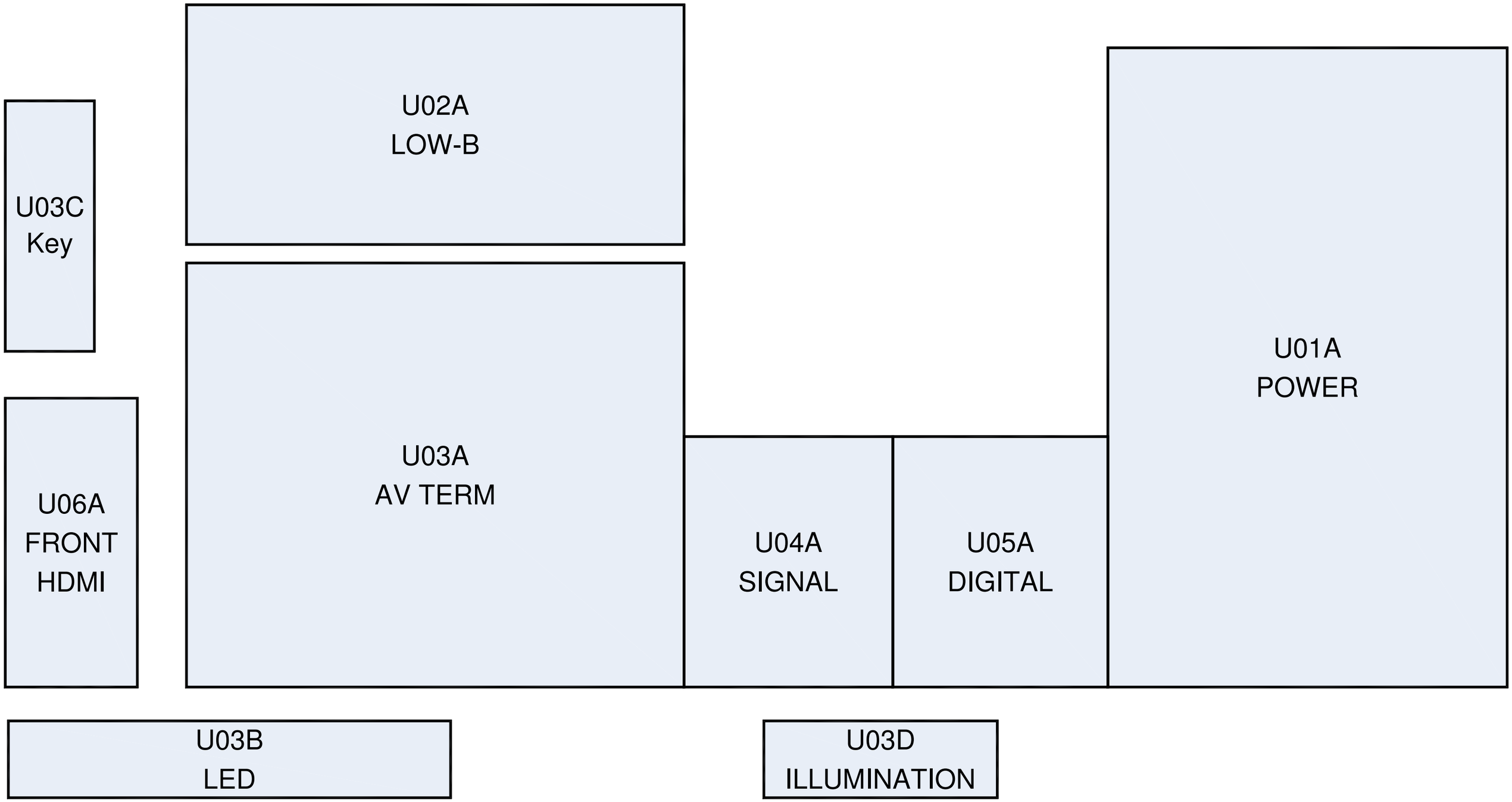
U02A
LOW-B
U03C
Key
U01A
POWER
U06A
FRONT
HDMI
U03A
AV TERM
U04A
SIGNAL
U05A
DIGITAL
U03B
LED
U03D
ILLUMINATION

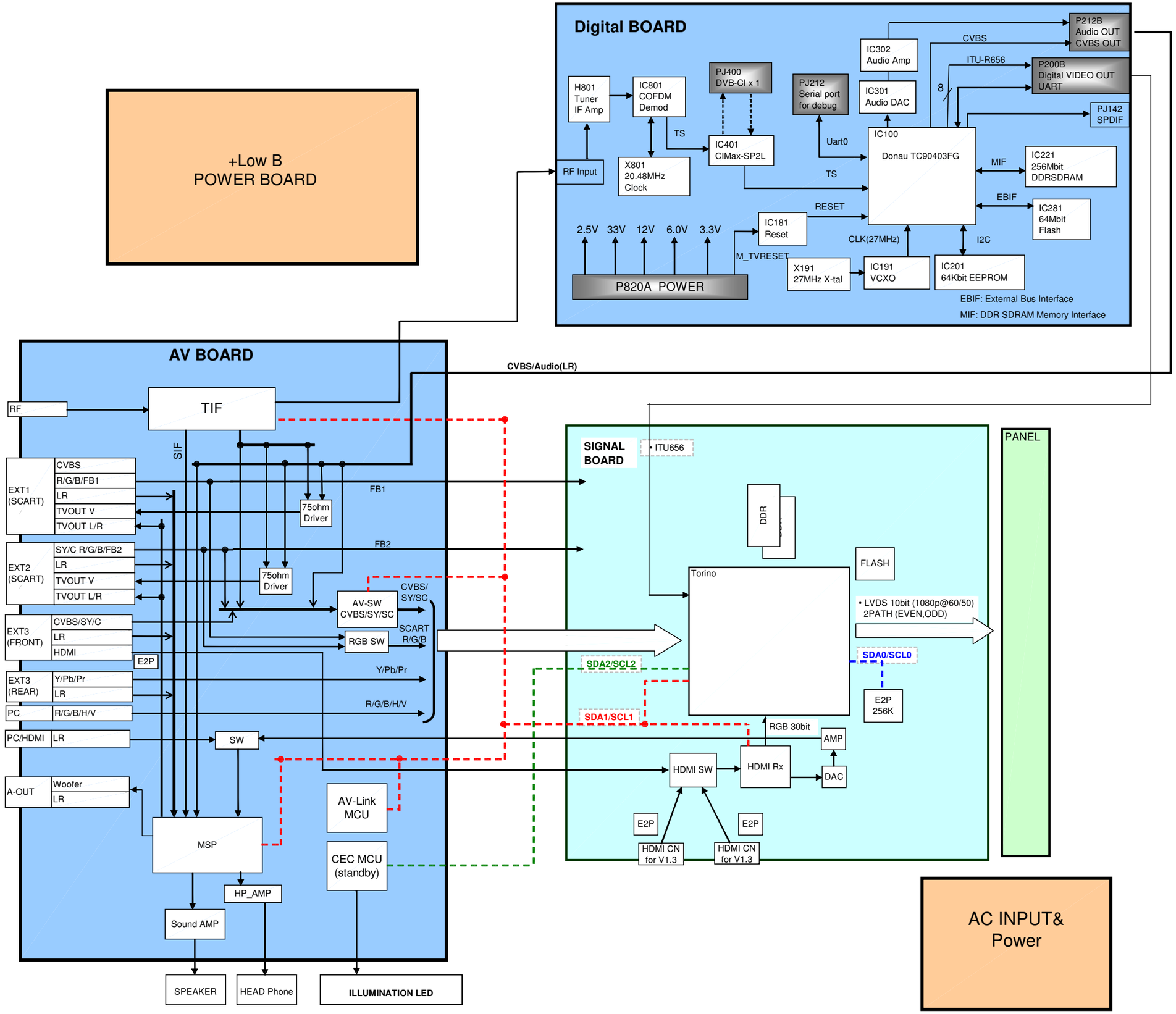
+Low B
POWER BOARD
Digital BOARD
H801
Tuner
IF Amp
IC801
COFDM
Demod
PJ400
DVB-CI x 1
PJ212
Serial port
for debug
IC302
Audio Amp
IC301
Audio DAC
P212B
Audio OUT
CVBS OUT
P200B
Digital VIDEO OUT
UART
PJ142
SPDIF
CVBS
ITU-R656
8
TS
IC401
CIMax-SP2L
Uart0
IC100
Donau TC90403FG
MIF
IC221
256Mbit
DDRSDRAM
EBIF
IC281
64Mbit
Flash
RF Input
X801
20.48MHz
Clock
TS
RESET
IC181
Reset
2.5V 33V 12V 6.0V 3.3V
CLK(27MHz)
I2C
M_TVRESET
X191
27MHz X-tal
IC191
VCXO
IC201
64Kbit EEPROM
P820A POWER
EBIF: External Bus Interface
MIF: DDR SDRAM Memory Interface
AV BOARD
CVBS/Audio(LR)
RF
TIF
SIF
EXT1
(SCART)
CVBS
R/G/B/FB1
LR
TVOUT V
TVOUT L/R
FB1
75ohm
Driver
EXT2
(SCART)
SY/C R/G/B/FB2
LR
TVOUT V
TVOUT L/R
FB2
75ohm
Driver
AV-SW
CVBS/SY/SC
CVBS/
SY/SC
EXT3
(FRONT)
CVBS/SY/C
LR
HDMI
E2P
RGB SW
SCART
R/G/B
EXT3
(REAR)
Y/Pb/Pr
LR
Y/Pb/Pr
PC
R/G/B/H/V
R/G/B/H/V
PC/HDMI
LR
SW
A-OUT
Woofer
LR
MSP
AV-Link
MCU
CEC MCU
(standby)
HP_AMP
Sound AMP
SPEAKER
HEAD Phone
ILLUMINATION LED
SIGNAL
BOARD
• ITU656
DDR
Torino
FLASH
• LVDS 10bit (1080p@60/50)
2PATH (EVEN,ODD)
SDA0/SCL0
E2P
256K
SDA2/SCL2
SDA1/SCL1
RGB 30bit
AMP
HDMI SW
HDMI Rx
DAC
E2P
E2P
HDMI CN
for V1.3
HDMI CN
for V1.3
PANEL
AC INPUT&
Power

SCHEMATIC DIAGRAM

Precaution

WARNING: BEFORE SERVICING THIS CHASSIS, READ THE "X-RAY RADIATION PRECAUTION" FOR DIRECT VIEW CTV ONLY, "SAFETY PRECAUTION" AND "PRODUCT SAFETY NOTICE" OF THIS MANUAL.

CAUTION: The international hazard symbols "⚠" in the schematic diagram and the parts list designate components which have special characteristics important for safety and should be replaced only with types identical to those in the original circuit or specified in the parts list.

The mounting position of replacements is to be identical with originals. Before replacing any of these components, read carefully the SAFETY PRECAUTION and PRODUCT SAFETY NOTICE.

Do not degrade the safety of the receiver through improper servicing.

Note:

1. RESISTOR
   Resistance is shown in ohm [K=1,000, M=1,000,000]. All resistors are 1/6 W and 5 % tolerance carbon resistor, unless otherwise noted as the following marks.

   1/2R : Metal or Metal oxide of 1/2 watt
   1/2S : Carbon composition of 1/2 watt
   1RF : Fuse resistor of 1 watt
   10 W : Cement of 10 watt
   K : ±10 %
   G : ±2 %
   F : ±1 %

2. CAPACITOR

Unless otherwise noted in schematic, all capacitor values less than 1 are expressed in μF, and the values more than 1 in pF.
All capacitors are ceramic 50 V, unless otherwise noted as the following marks.

+ = Electrolytic capacitor
Ⓜ = Mylar capacitor

3. The parts indicated with "⚠" have special characteristics, and should be replaced with identical parts only.

4. Voltages read with DIGITAL MULTI-METER from point indicated to chassis ground, using a color bar signal with all controls at normal, line voltage at nominal AC volts.

5. Waveforms are taken receiving color bar signal with enough sensitivity.

6. Voltage reading shown are nominal values and may vary ±20 % except H.V.

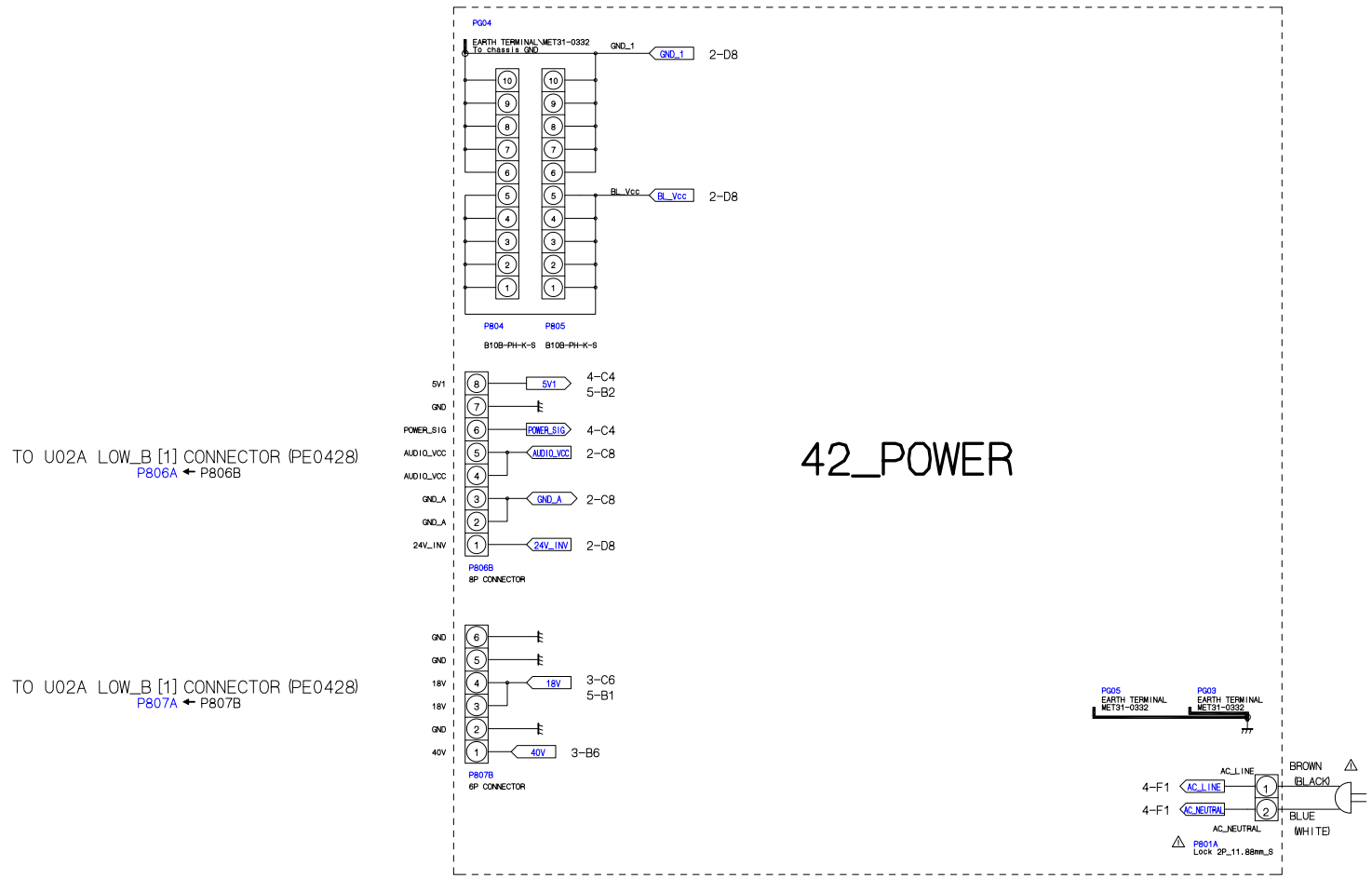

U01A POWER [1] CONNECTOR (PE0282)

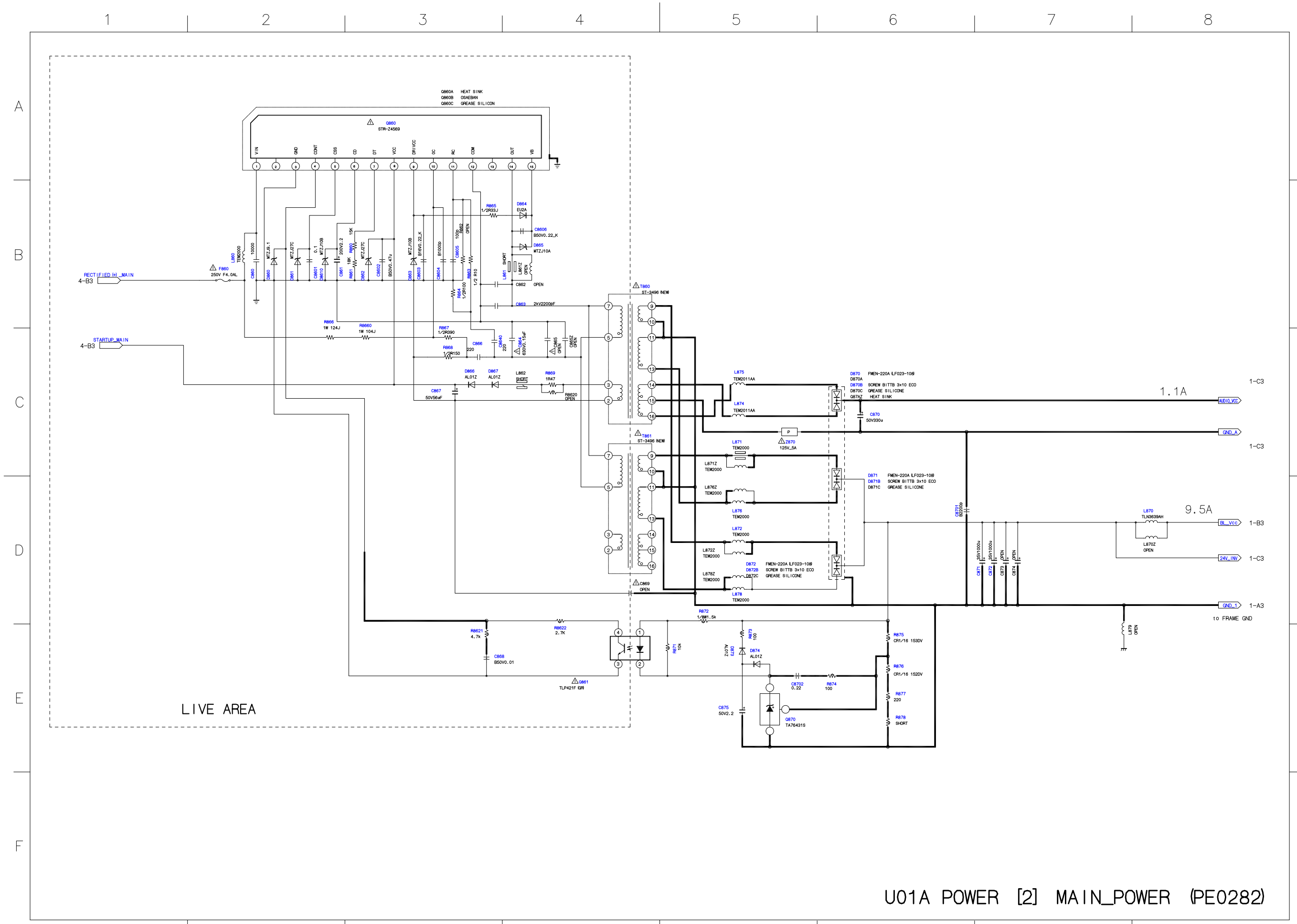

U01A POWER [2] MAIN_POWER (PE0282)

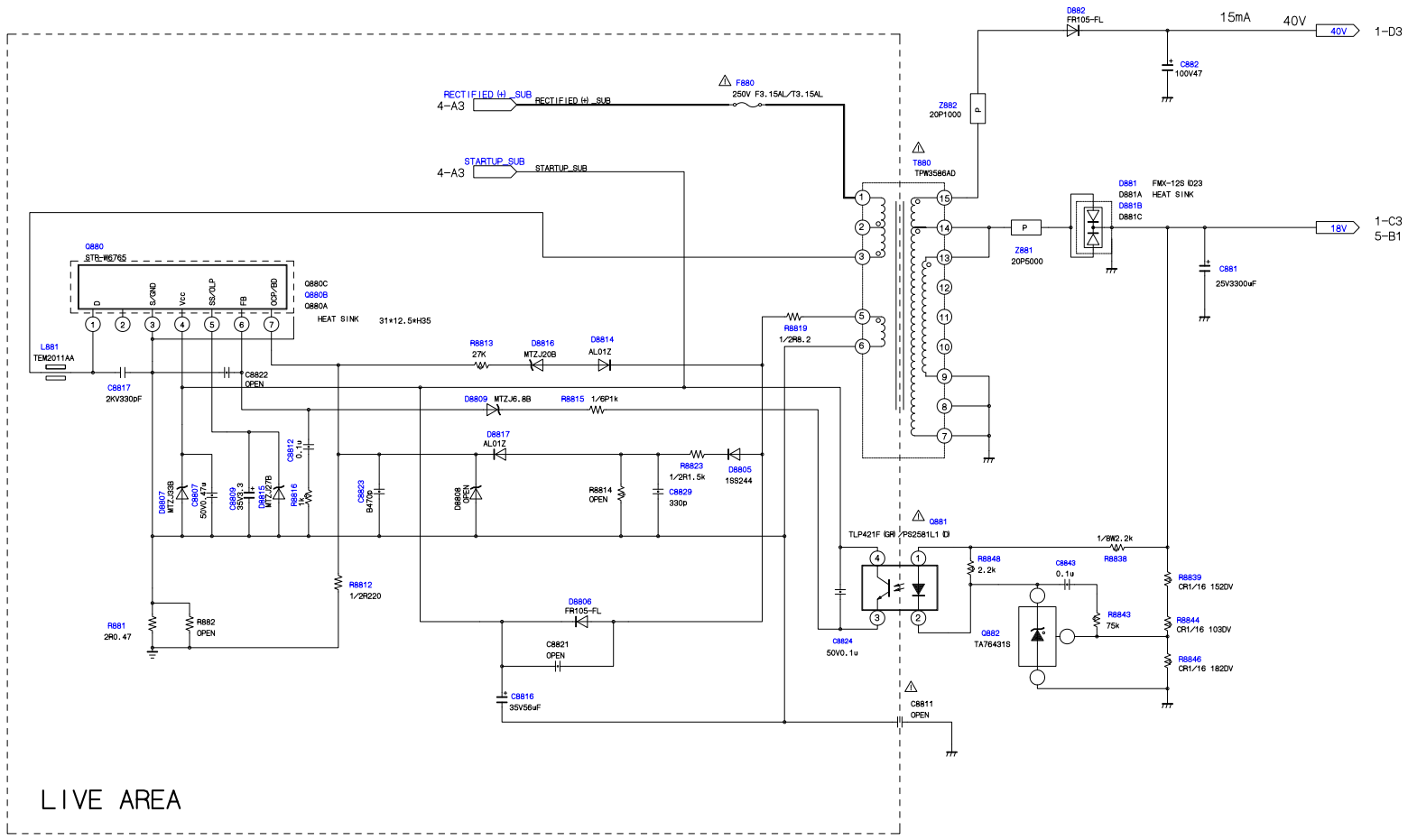

U01A POWER [3] SUB_POWER (PE0282)

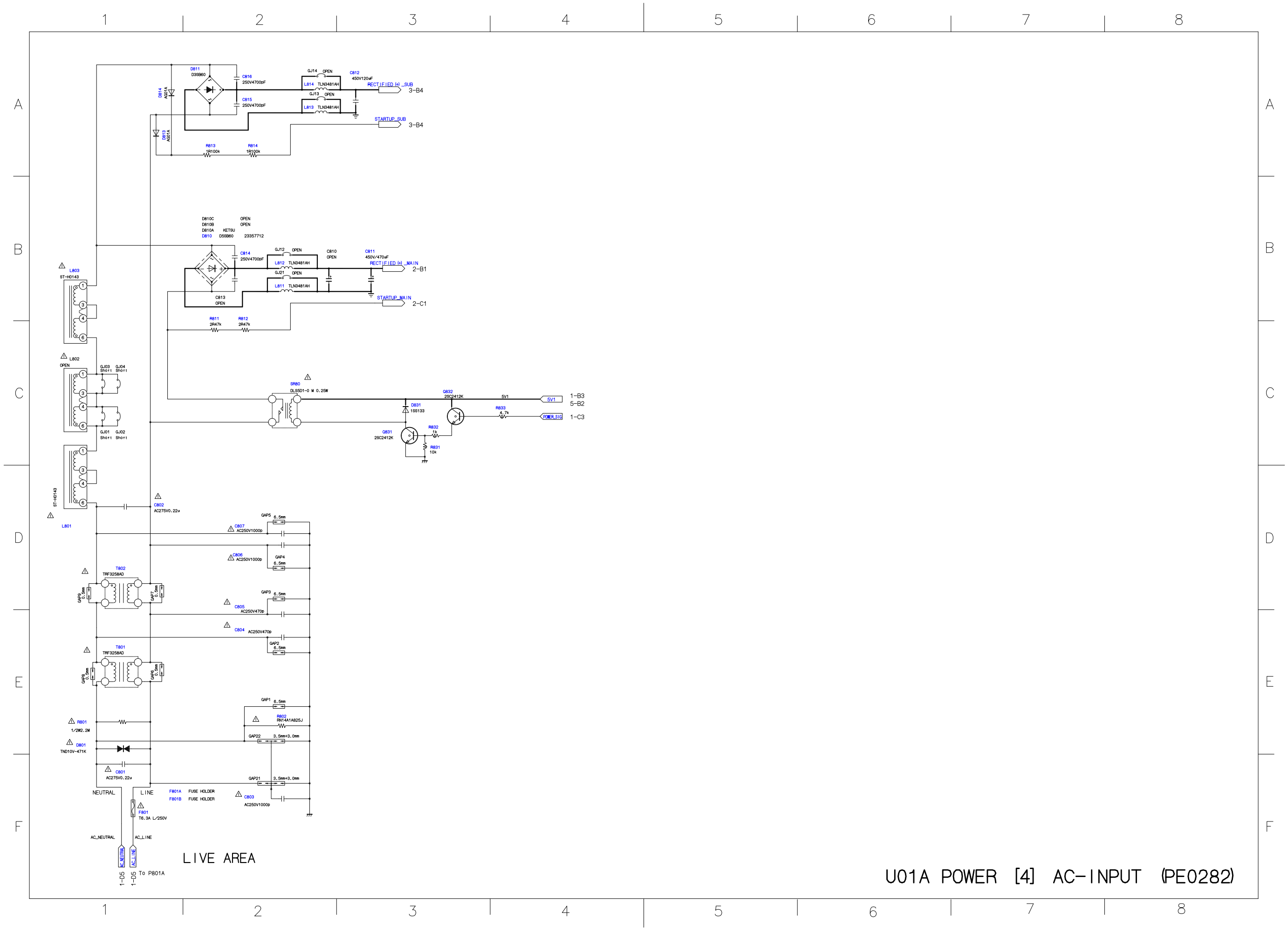

U01A POWER [4] AC-INPUT (PE0282)

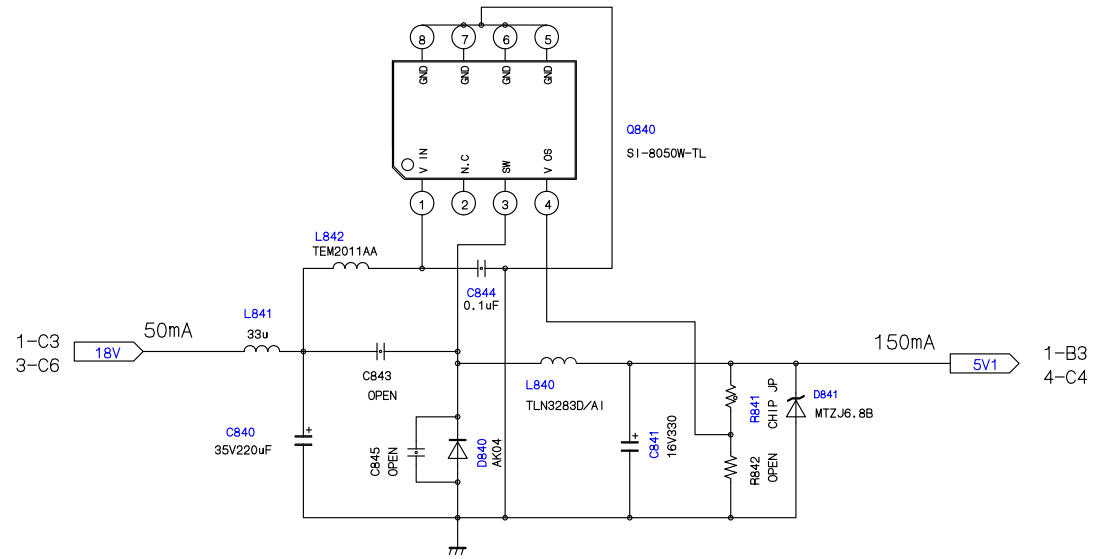

U01A POWER [5] STANDBY 5V1 (PE0282)

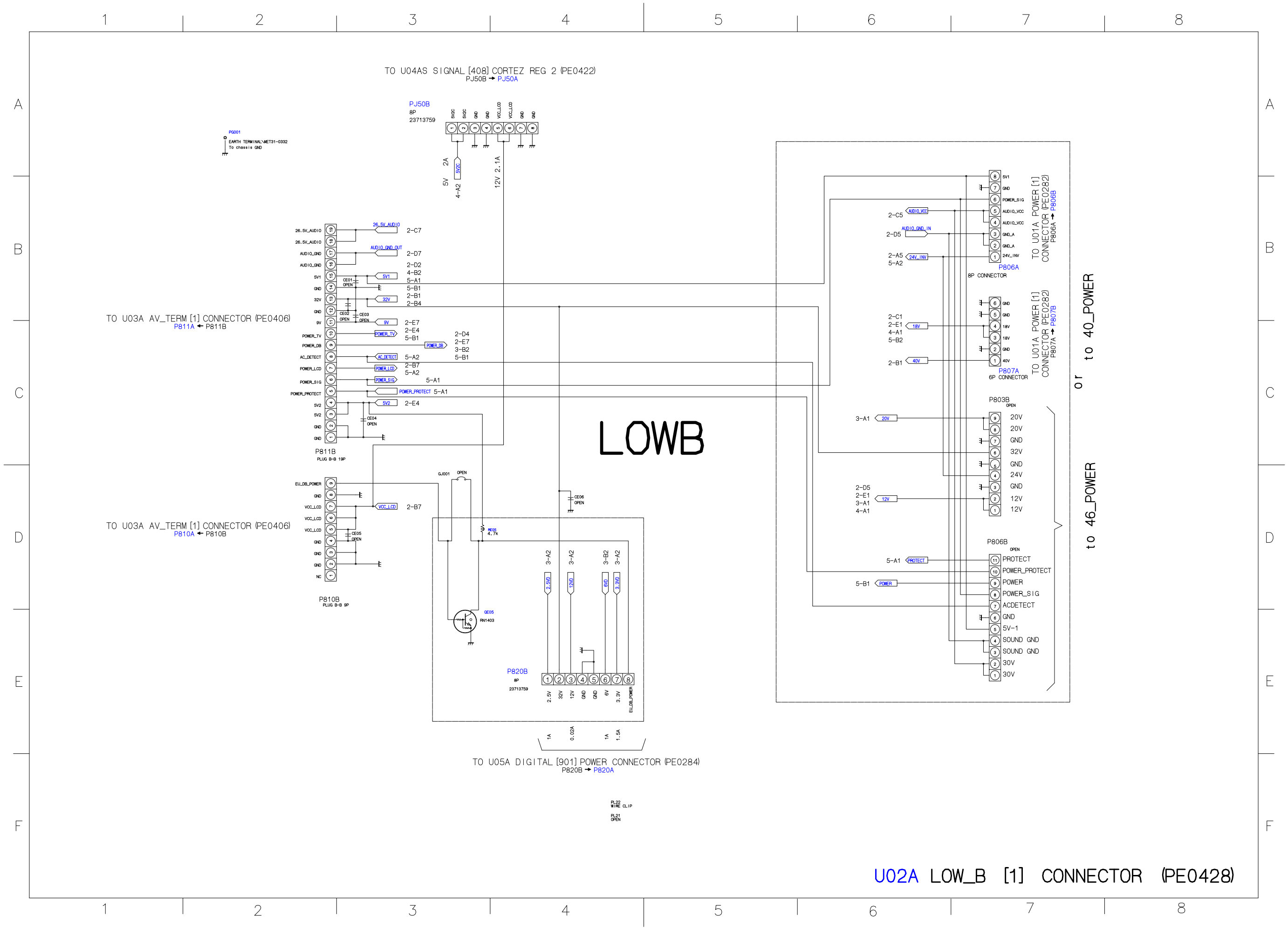
TO U04AS SIGNAL [408] CORTEZ REG 2 (PE0422)
PJ50B → PJ50A
PJ50B
8P
23713759
PG001
EARTH TERMINAL\MET31-0332
To chassis GND
TO U03A AV_TERM [1] CONNECTOR (PE0406)
P811A ← P811B
P811B
PLUG B-B 19P
TO U03A AV_TERM [1] CONNECTOR (PE0406)
P810A ← P810B
P810B
PLUG B-B 9P
LOWB
P820B
8P
23713759
TO U05A DIGITAL [901] POWER CONNECTOR (PE0284)
P820B → P820A
TO U01A POWER [1] CONNECTOR (PE0282)
P806A → P806B
P806A
8P CONNECTOR
TO U01A POWER [1] CONNECTOR (PE0282)
P807A → P807B
P807A
6P CONNECTOR
P803B
P806B
or to 40_POWER
to 46_POWER
U02A LOW_B [1] CONNECTOR (PE0428)

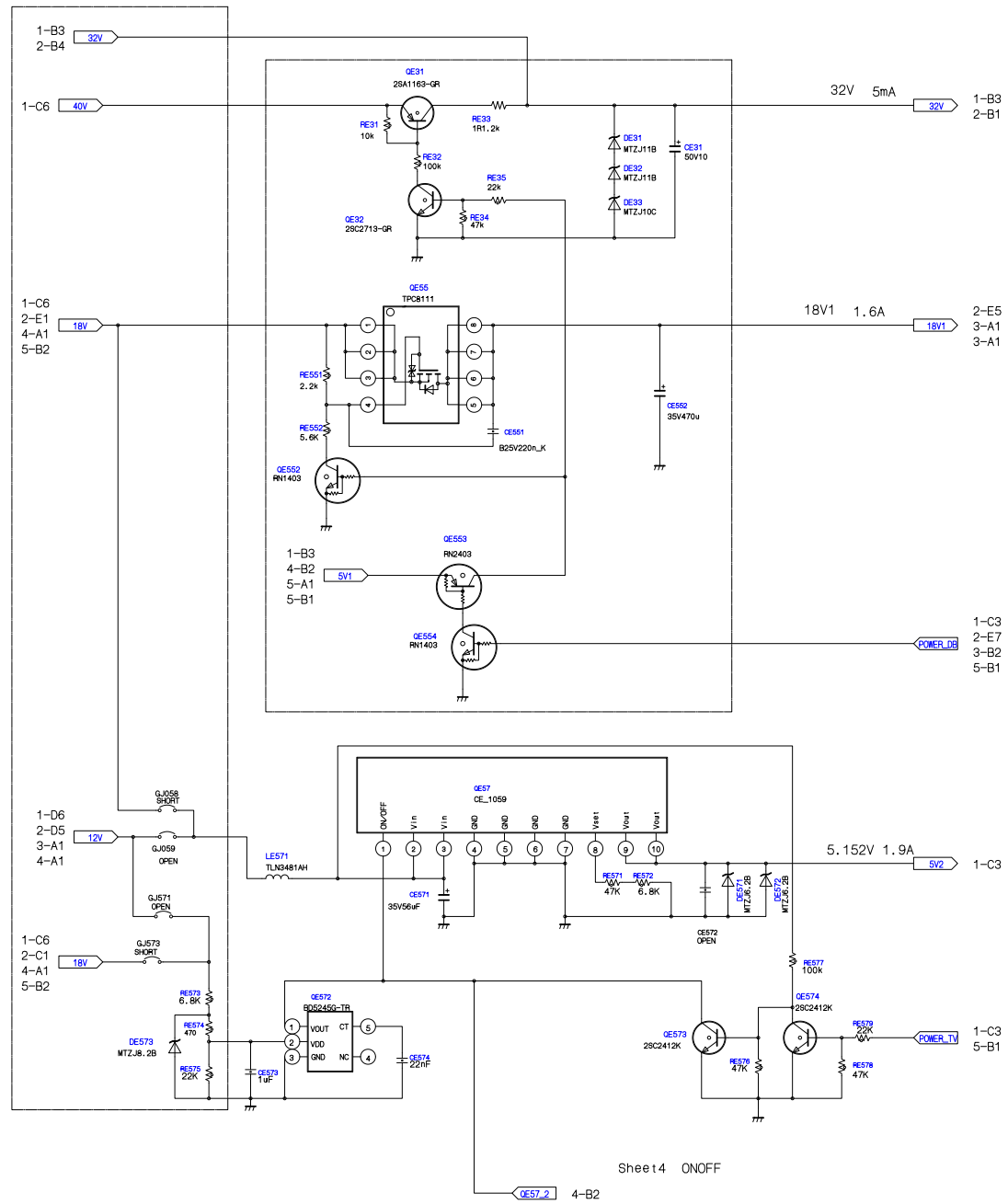

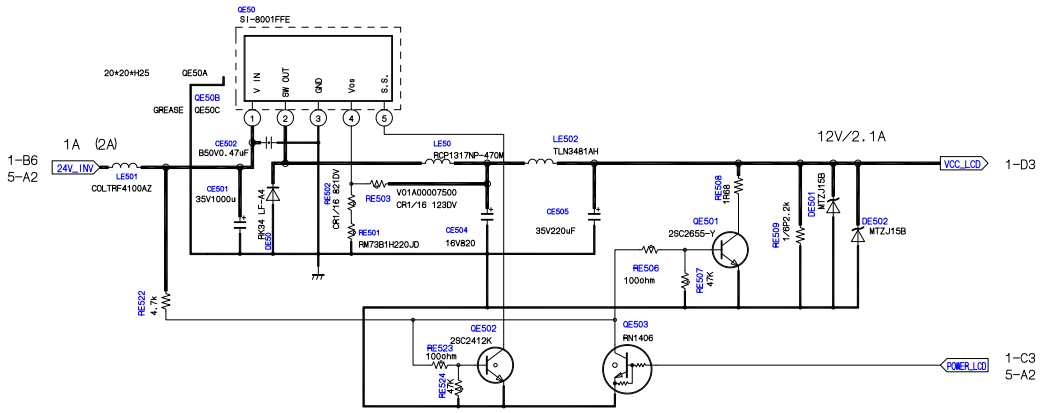

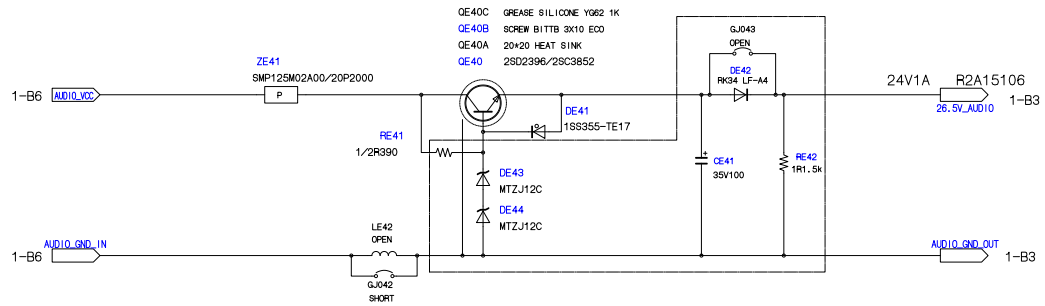

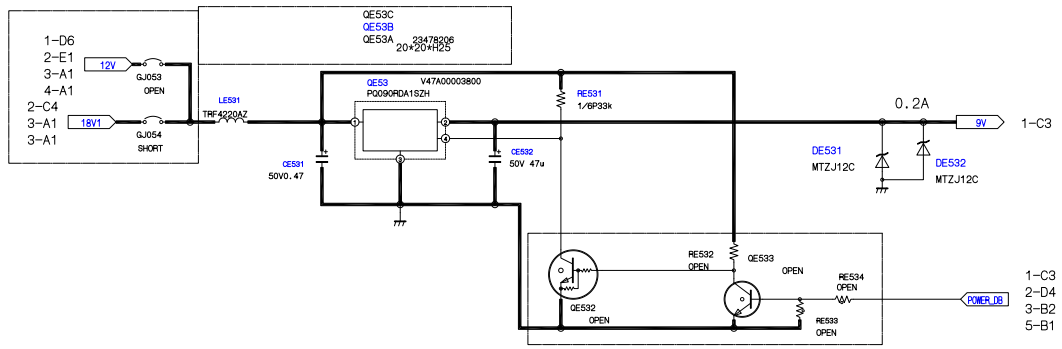

U02A LOW_B [2] REGULATOR (PE0428)

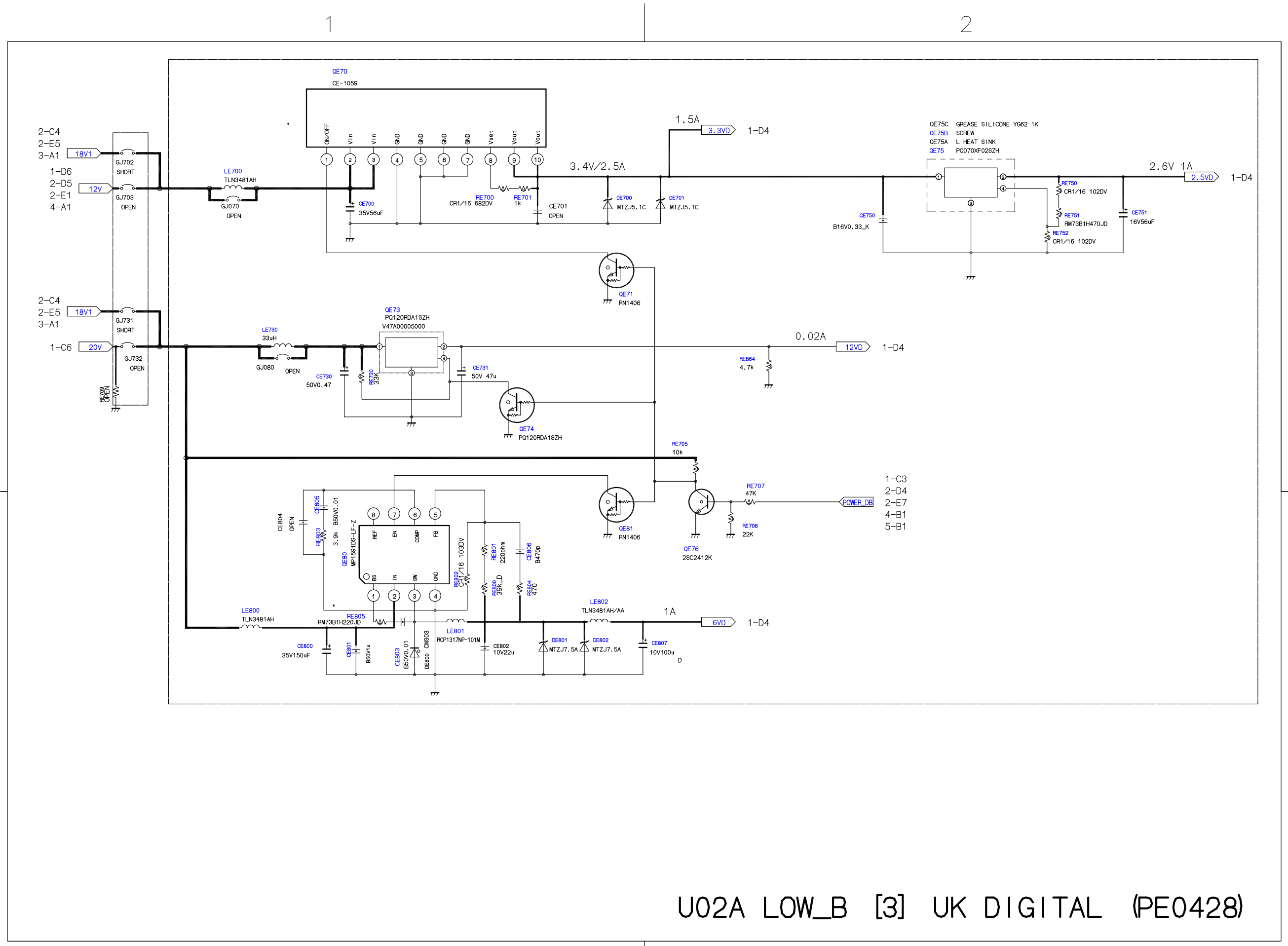

U02A LOW_B [3] UK DIGITAL (PE0428)

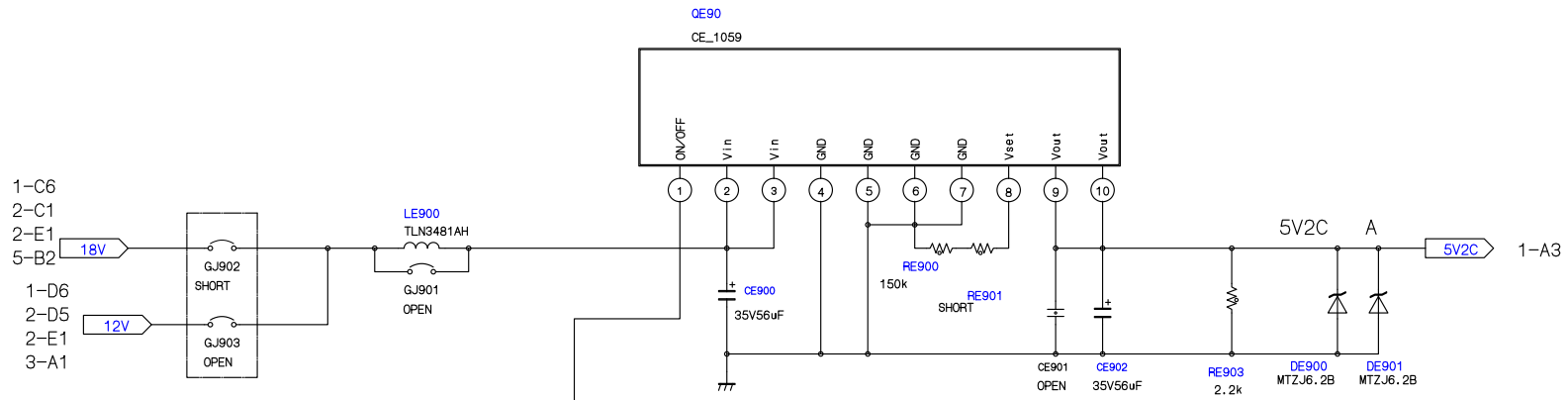

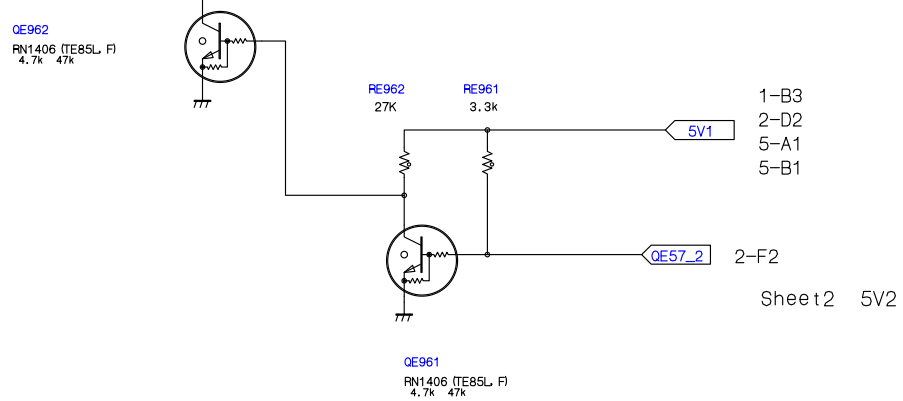

U02A LOW_B [4] for SIG (PE0428)

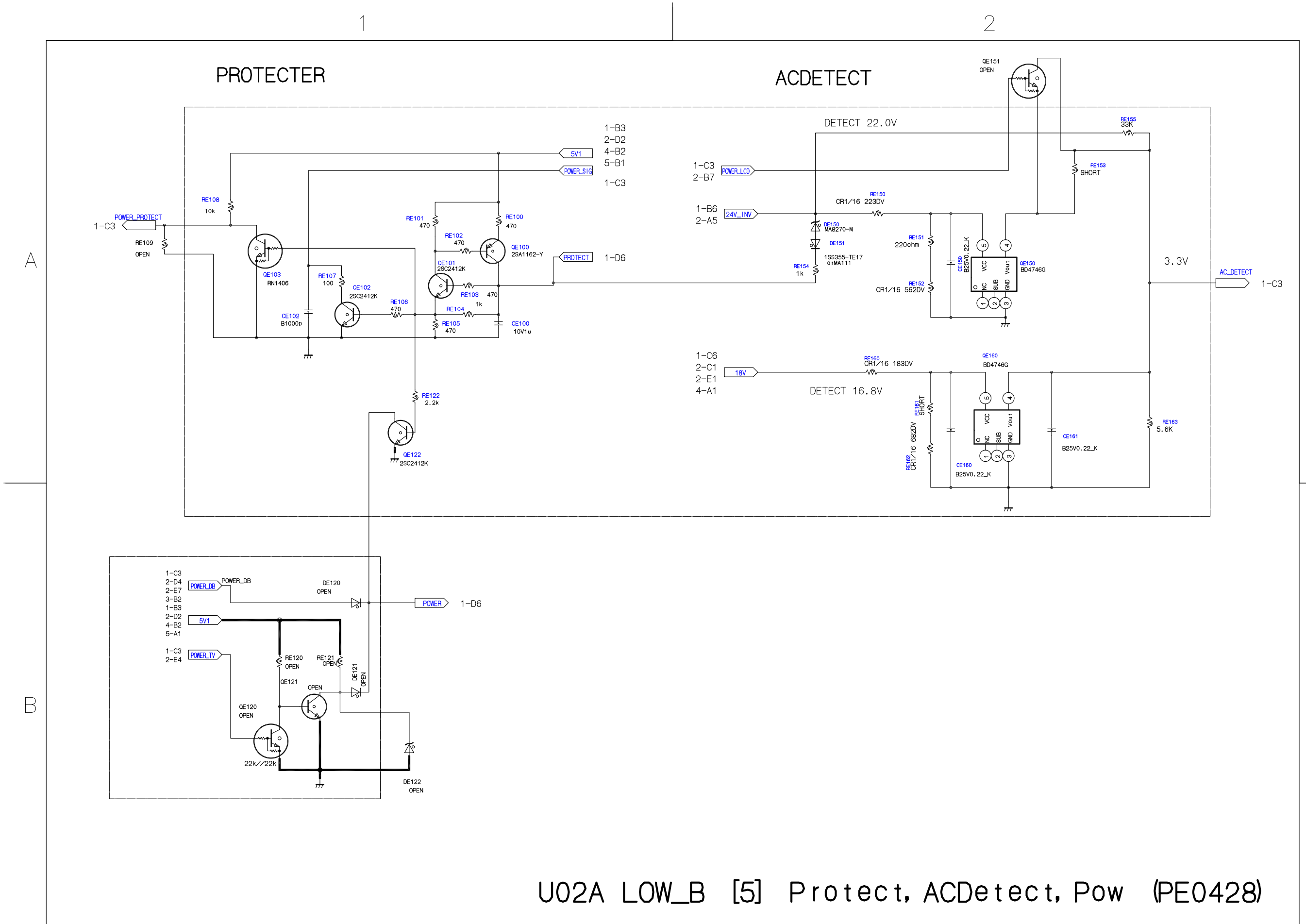

U02A LOW_B [5] Protect, ACDetect, Pow (PE0428)

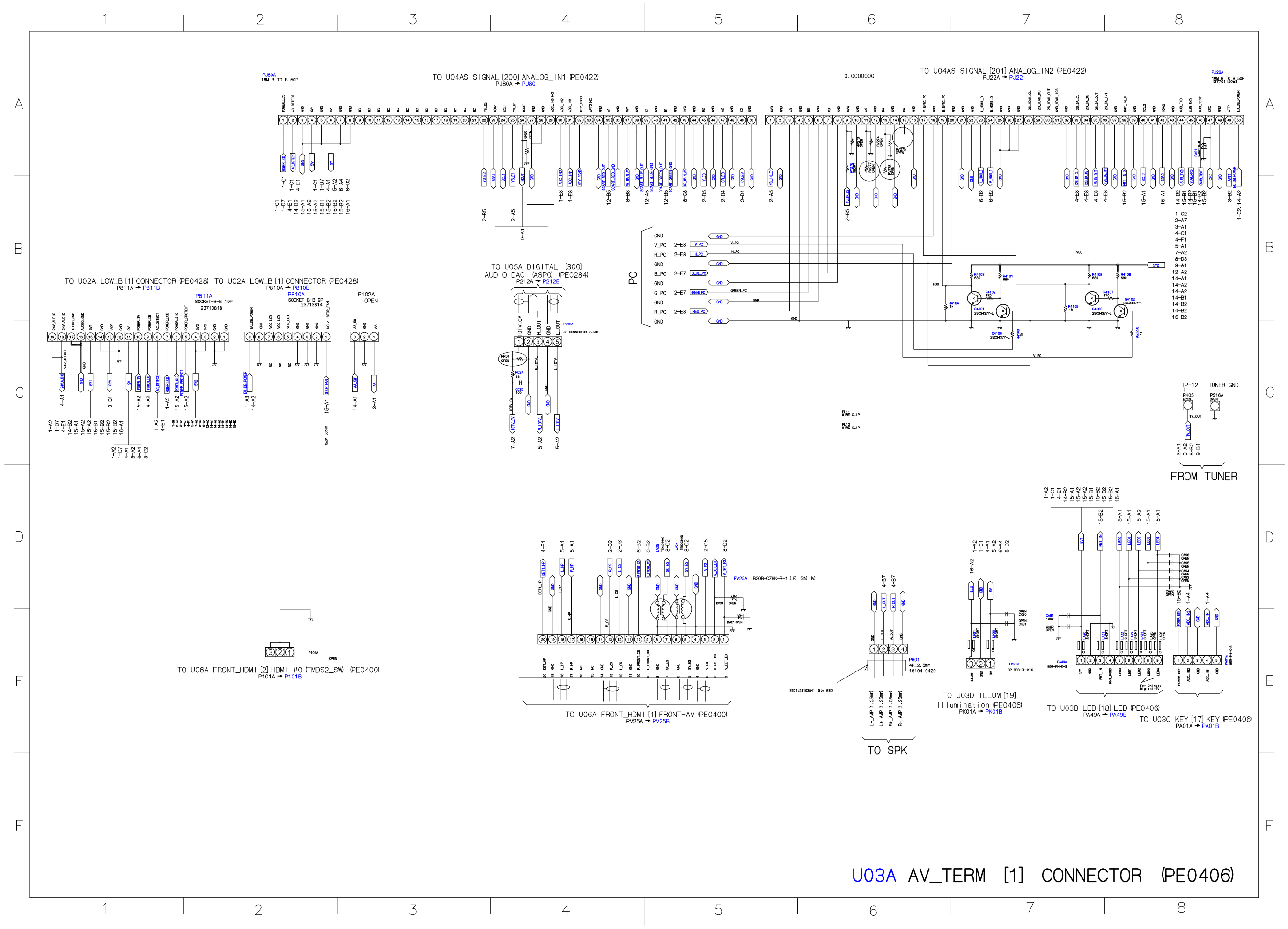
TO U04AS SIGNAL [200] ANALOG_IN1 (PE0422)
PJ80A → PJ80
TO U04AS SIGNAL [201] ANALOG_IN2 (PE0422)
PJ22A → PJ22
TO U02A LOW_B [1] CONNECTOR (PE0428)
P811A → P811B
TO U02A LOW_B [1] CONNECTOR (PE0428)
P810A → P810B
TO U05A DIGITAL [300] AUDIO DAC (ASPO) (PE0284)
P212A → P212B
PC
TP-12
TUNER GND
FROM TUNER
TO U06A FRONT_HDMI [2] HDMI #0 (TMDS2_SW) (PE0400)
P101A → P101B
TO U06A FRONT_HDMI [1] FRONT-AV (PE0400)
PV25A → PV25B
TO SPK
TO U03D ILLUM [19] Illumination (PE0406)
PK01A → PK01B
TO U03B LED [18] LED (PE0406)
PA49A → PA49B
TO U03C KEY [17] KEY (PE0406)
PA01A → PA01B
U03A AV_TERM [1] CONNECTOR (PE0406)

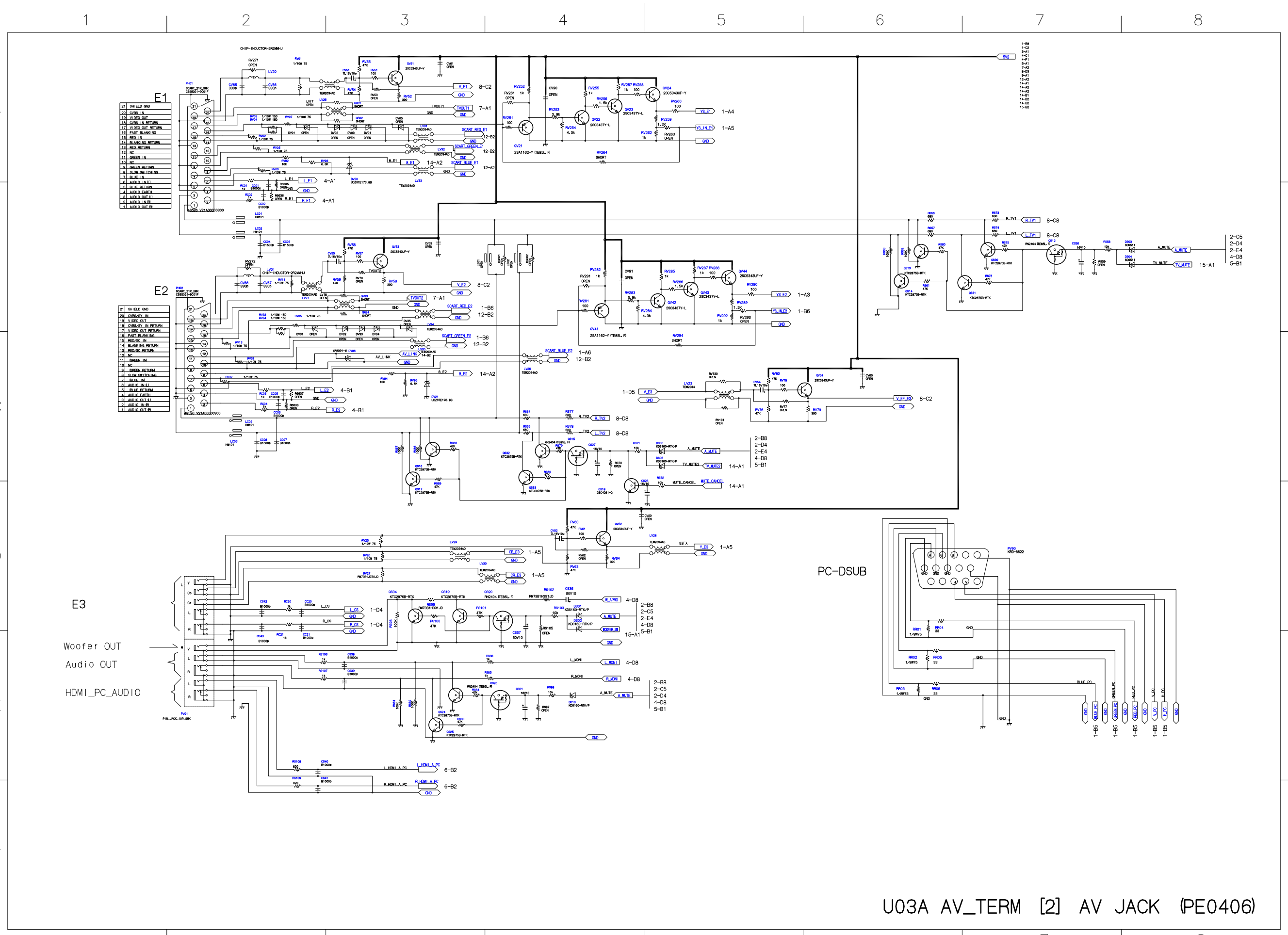

U03A AV_TERM [2] AV JACK (PE0406)

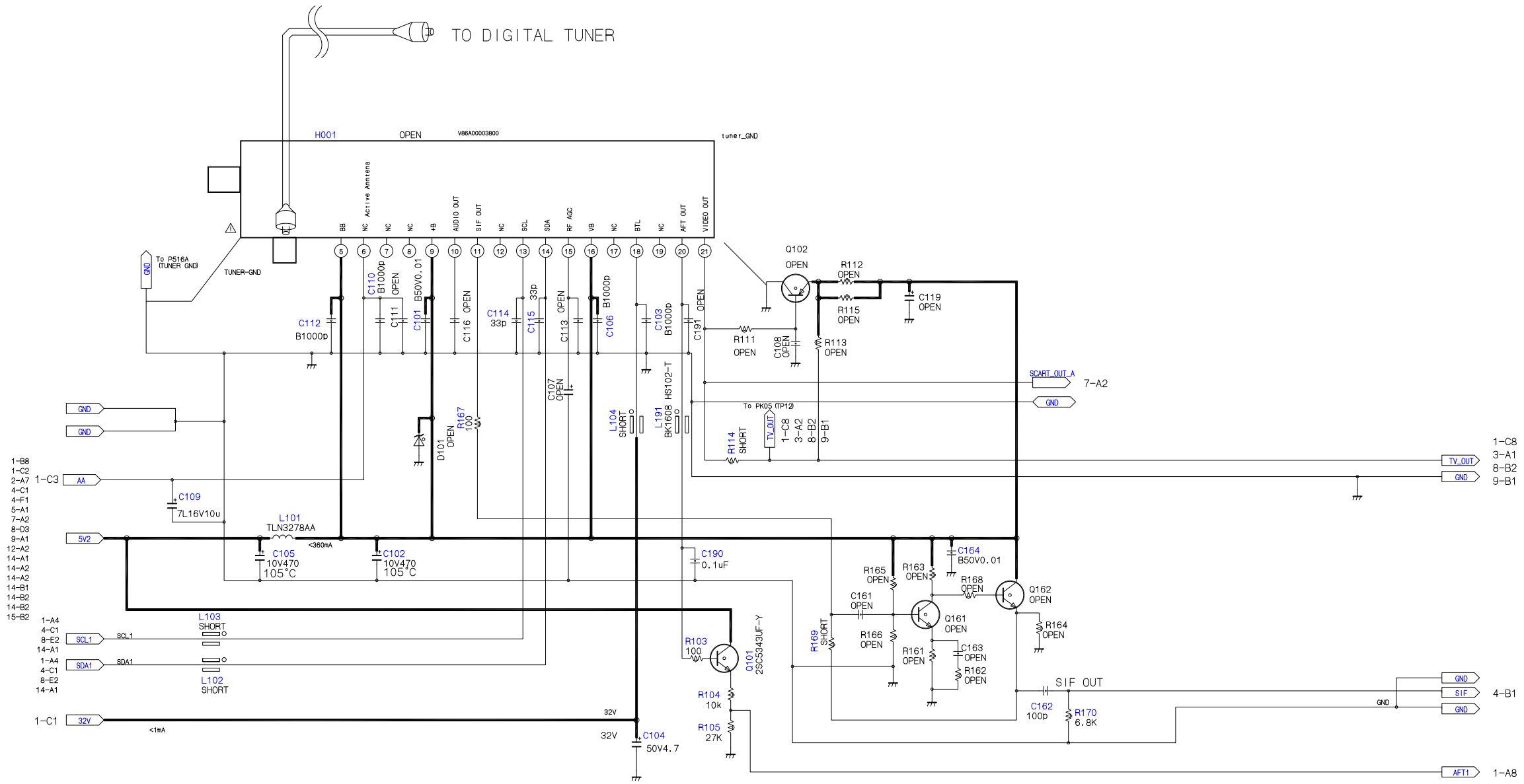

U03A AV_TERM [3] TUNER (PE0406)

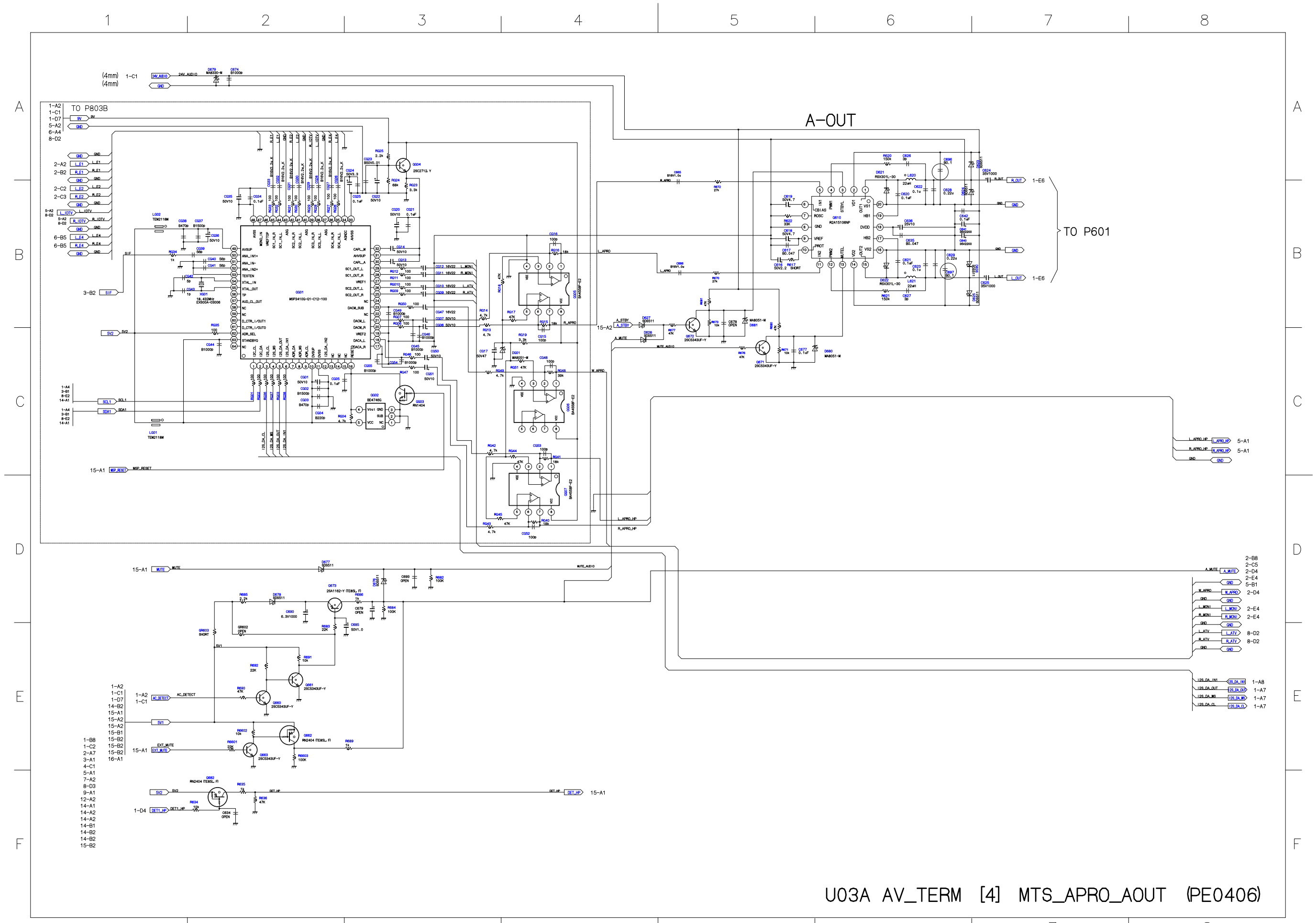
A-OUT
TO P803B
TO P601
U03A AV_TERM [4] MTS_APRO_AOUT (PE0406)

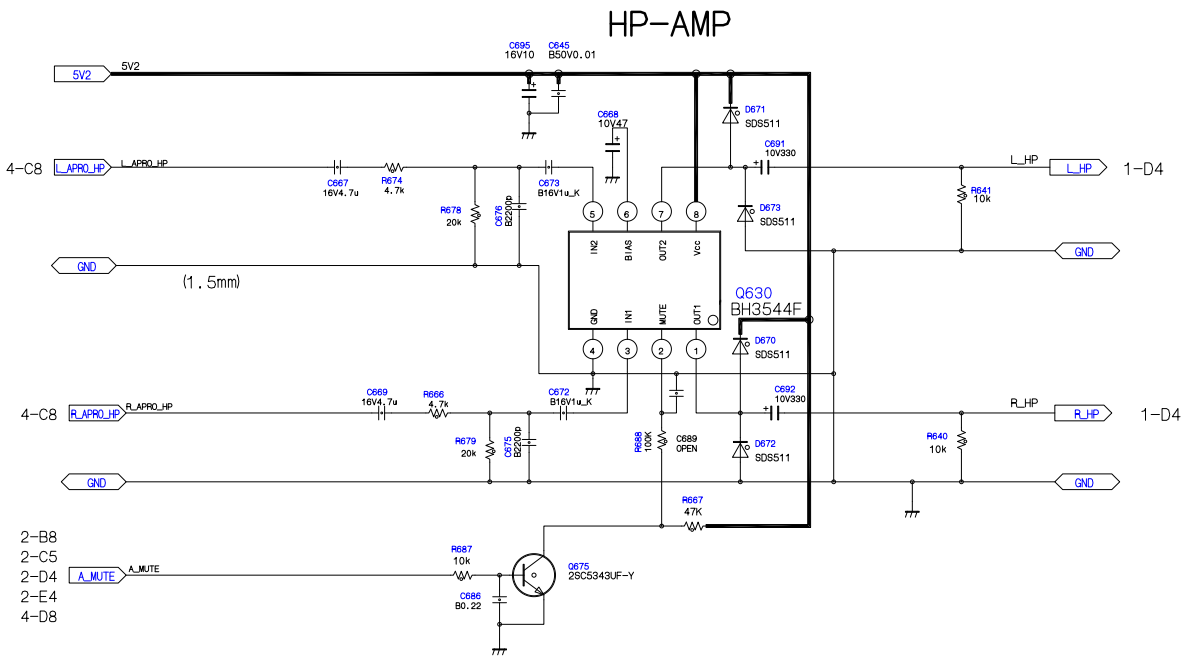

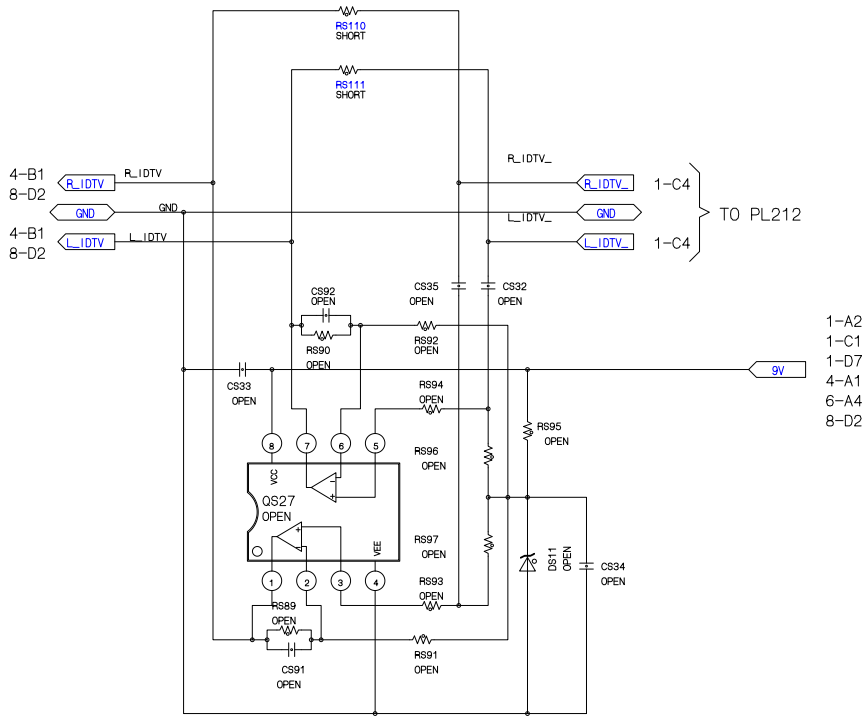

U03A AV_TERM [5] EU_DIGITAL_RECEIVE CIRCUIT HEADPHONE_AMP (PE0406)

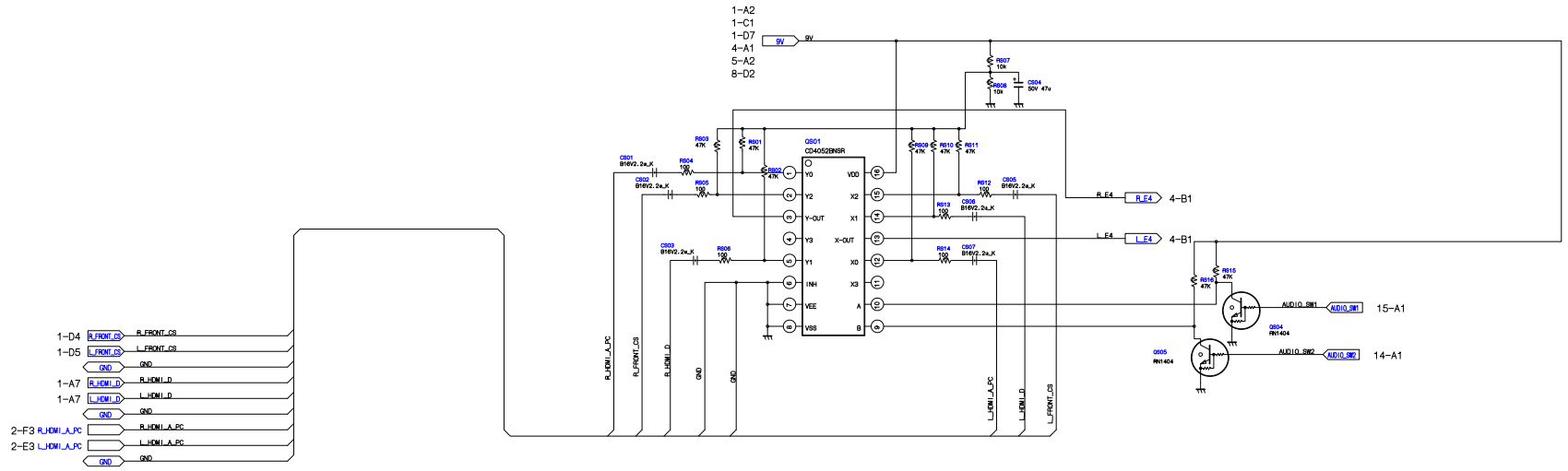

U03A AV_TERM [6] AUDIO_SW (PE0406)

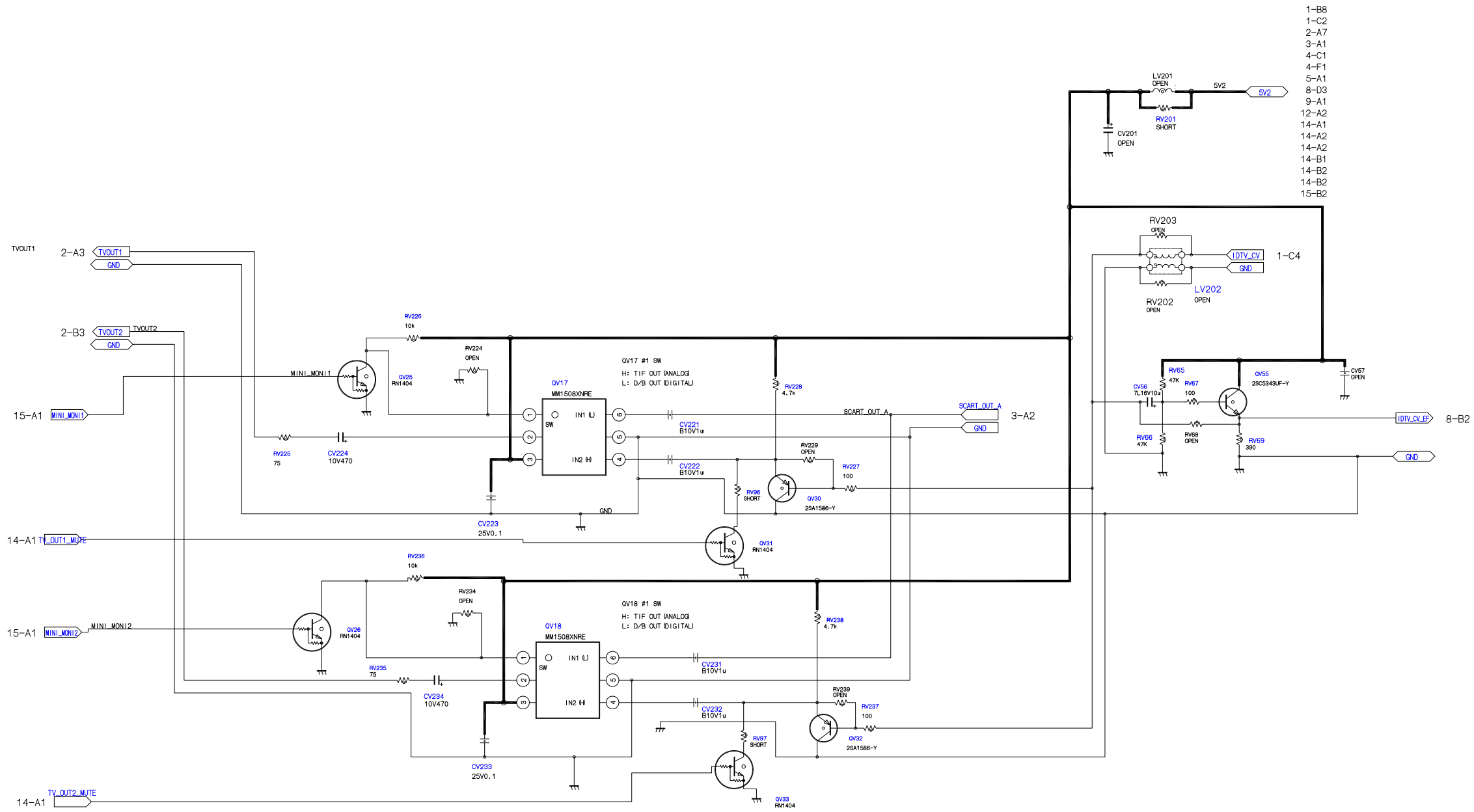

U03A AV_TERM [7] TV-OUT&MONI-OUT (PE0406)

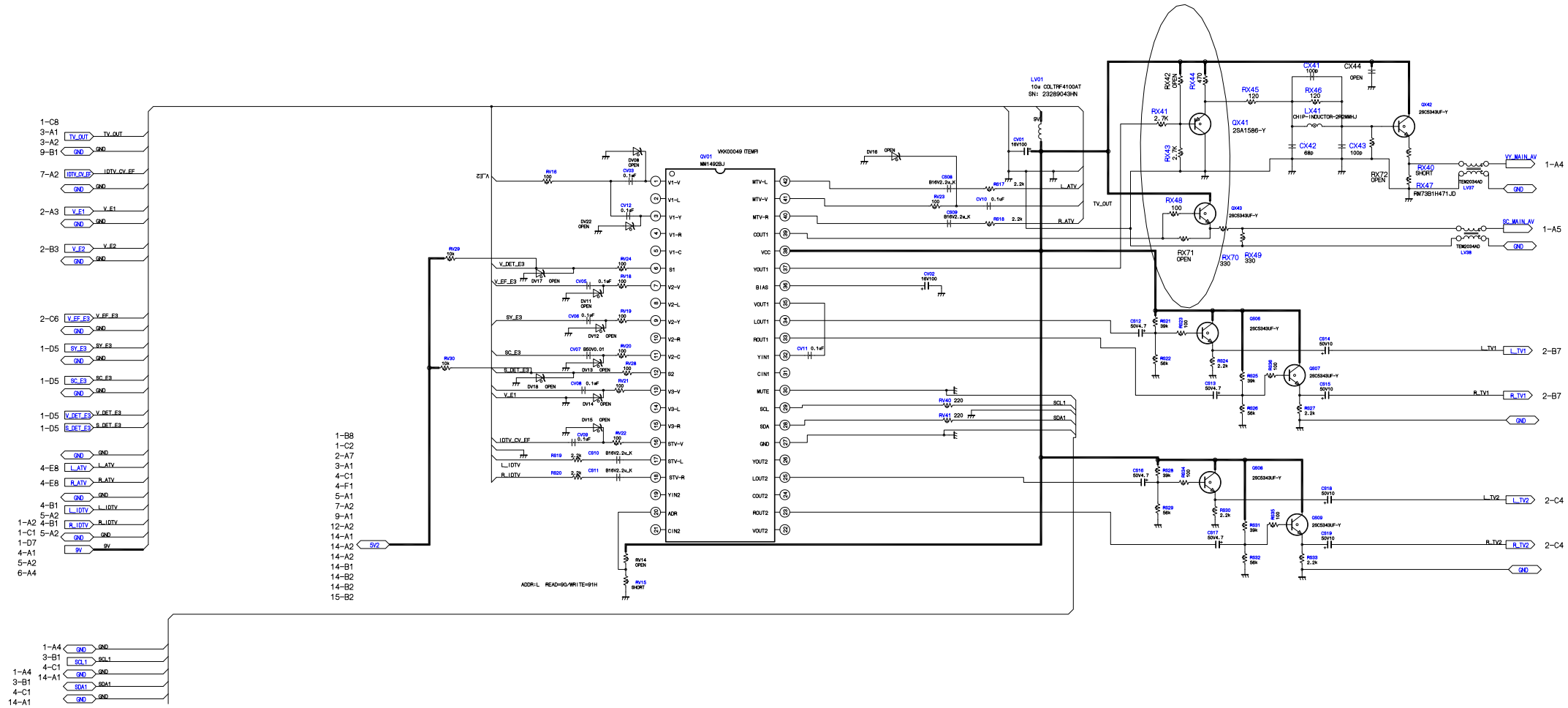

U03A AV_TERM [8] AV_SW (PE0406)

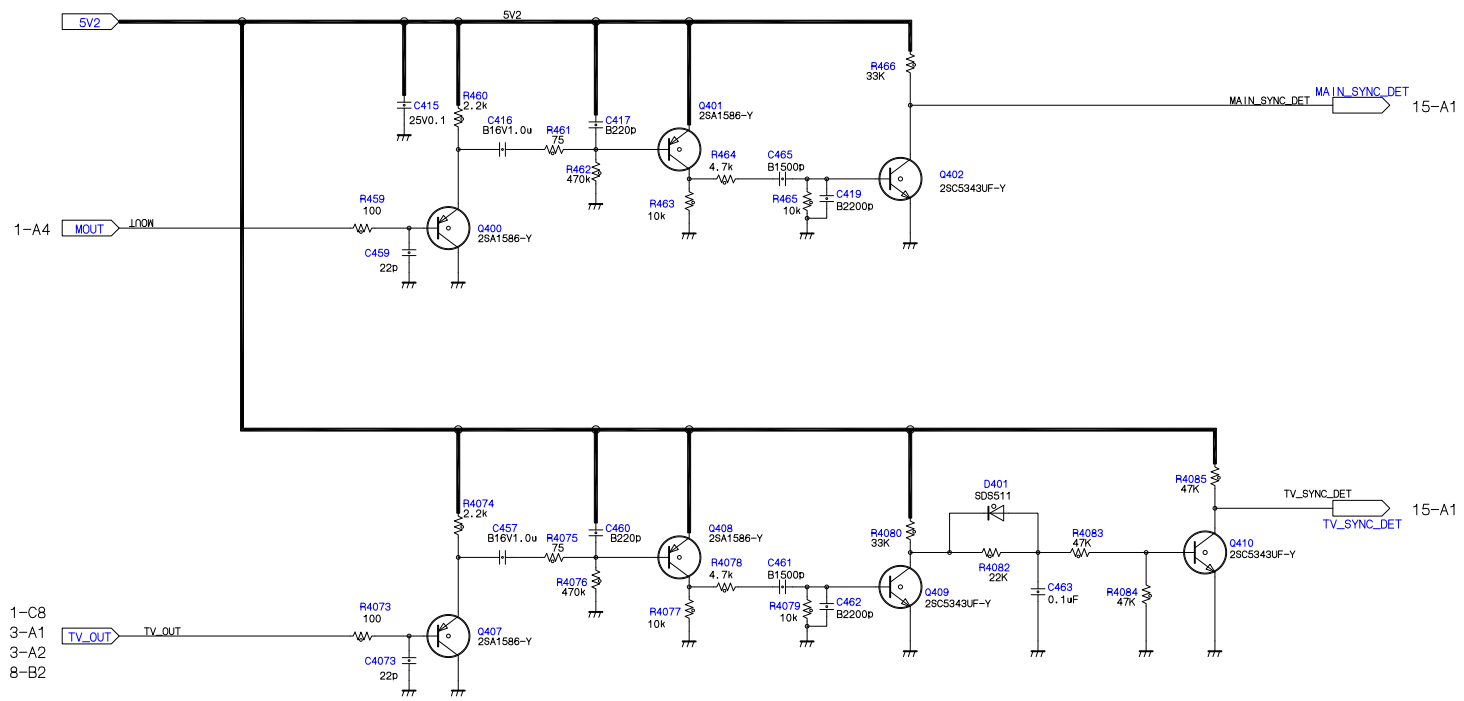

U03A AV_TERM [9] SYNC_DET (PE0406)

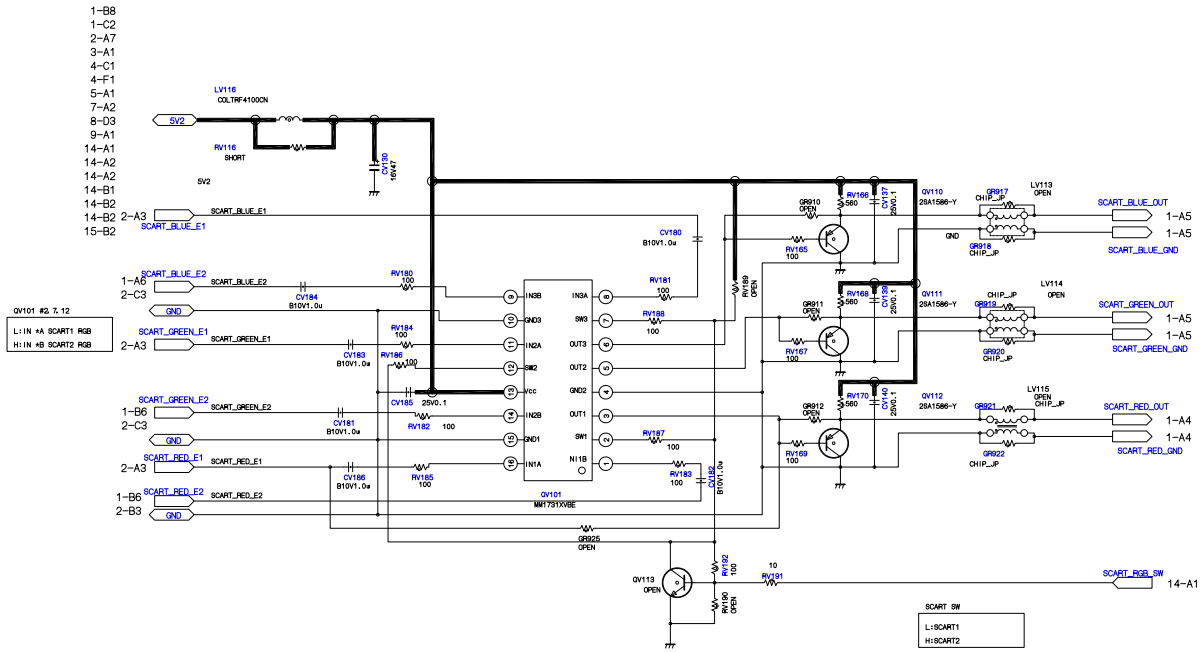

U03A AV_TERM [12] SCART SW (PE0406)

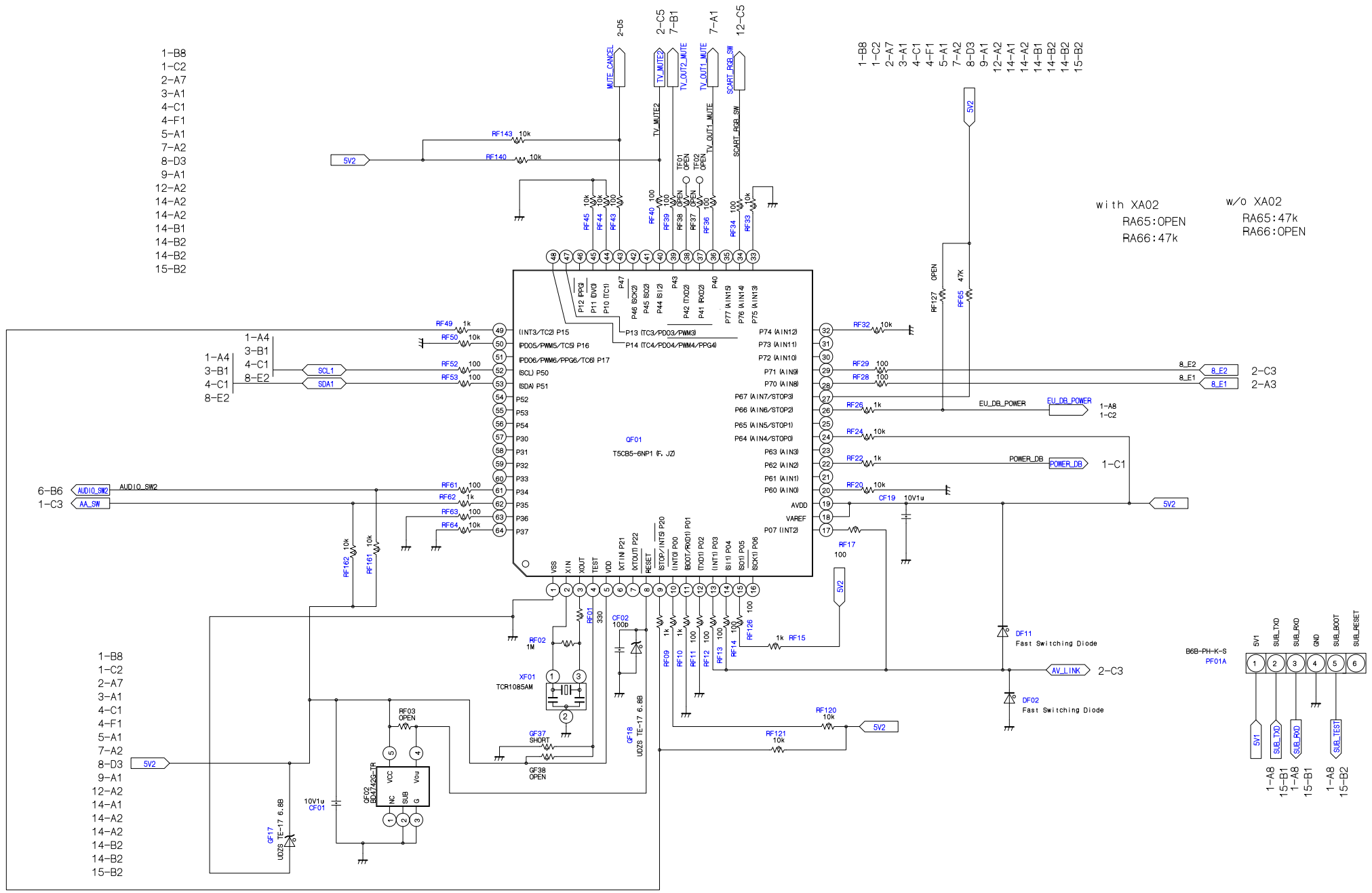

U03A AV_TERM [14] AV-Link Micoro GPIO for Scart (PE0406)

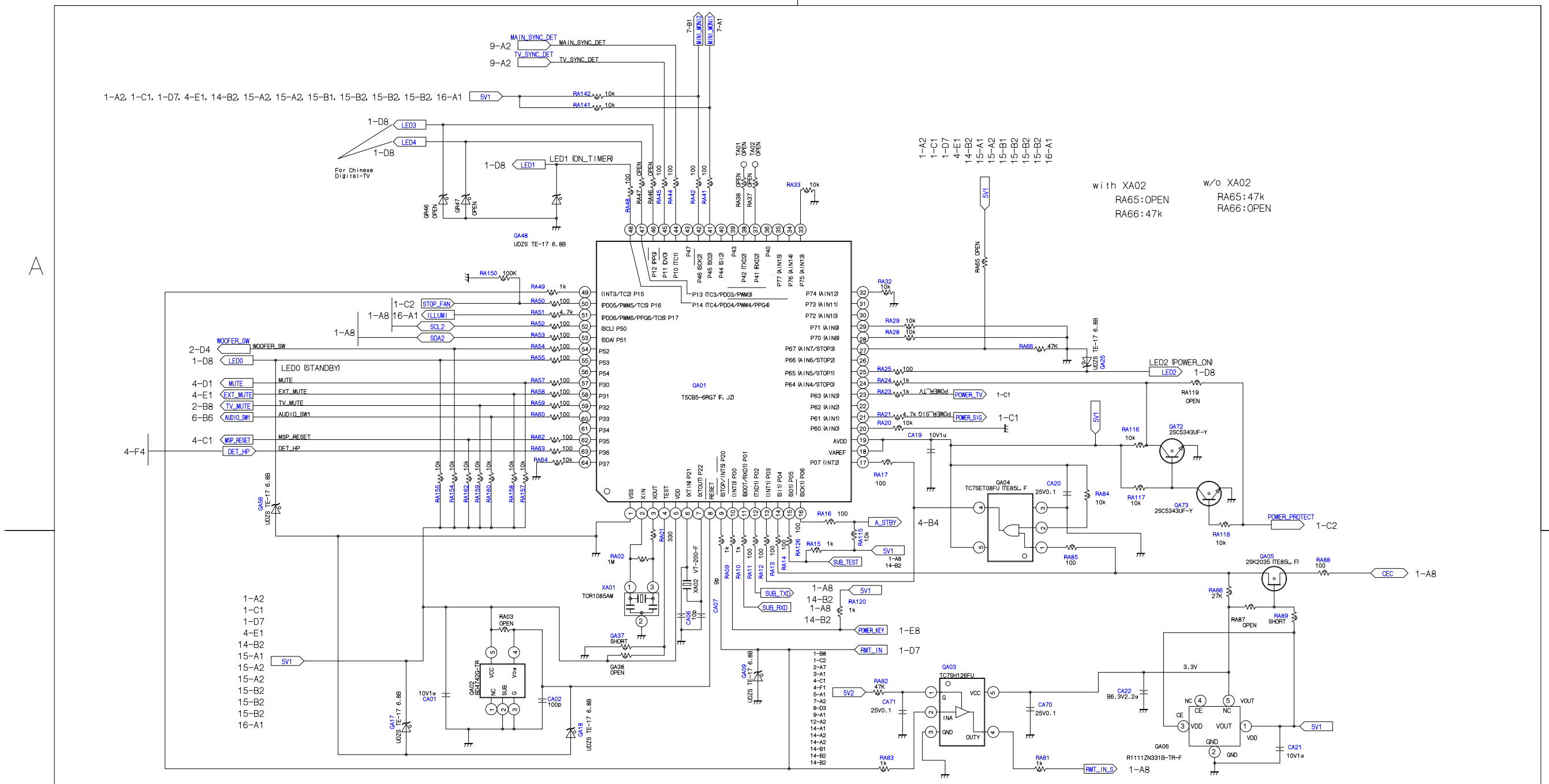

U03A AV_TERM [15] STANDBY MICRO with HDMI CEC (PE0406)

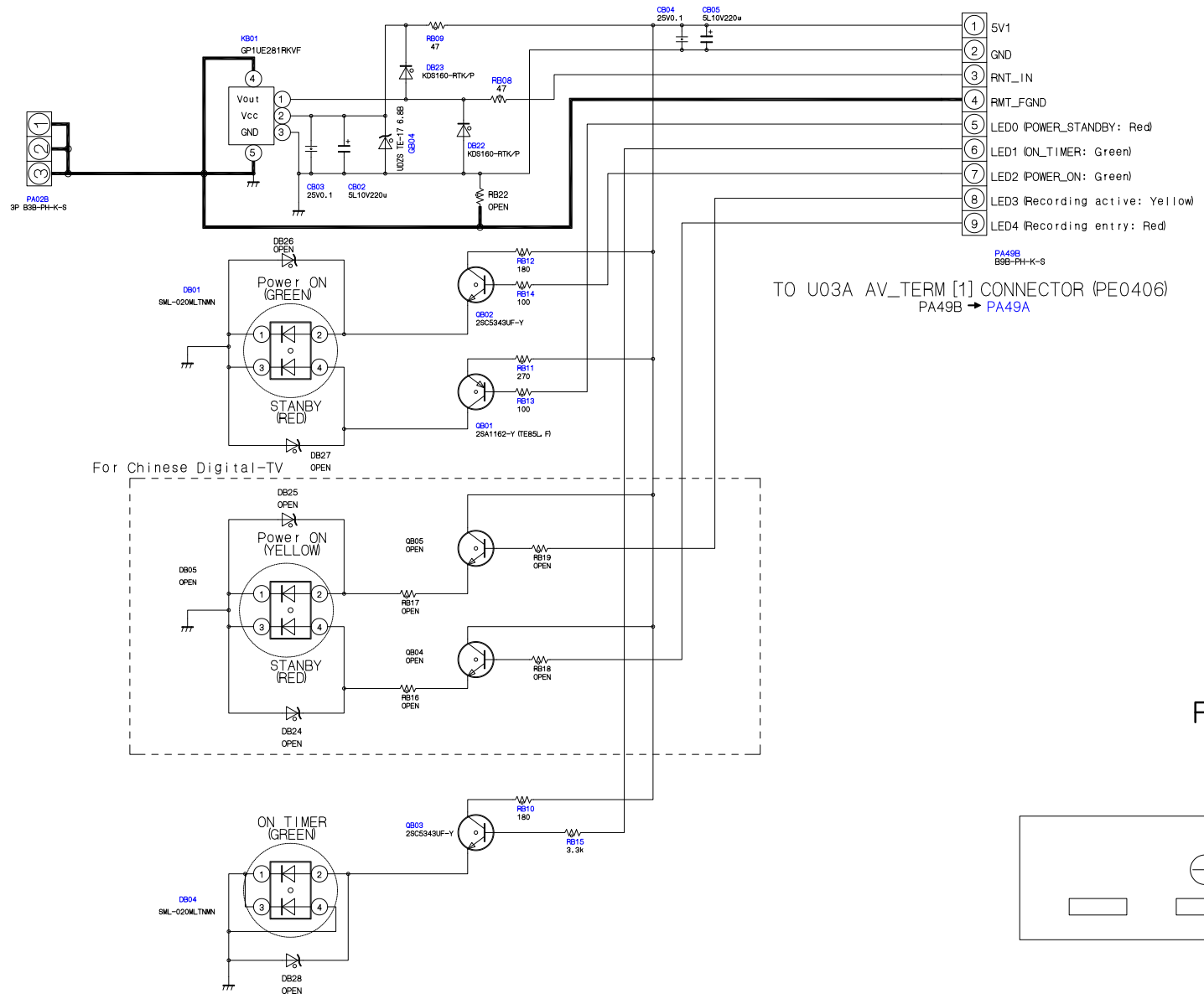

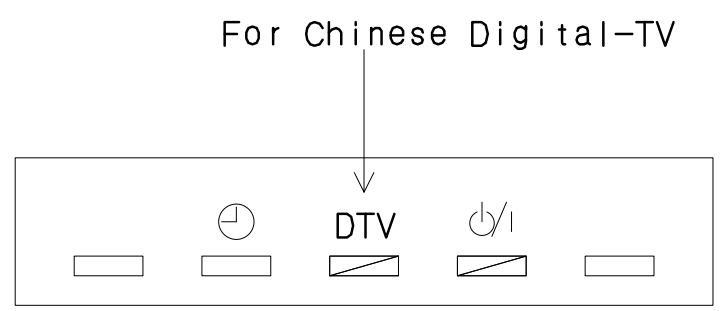

U03B LED [18] LED (PE0406)

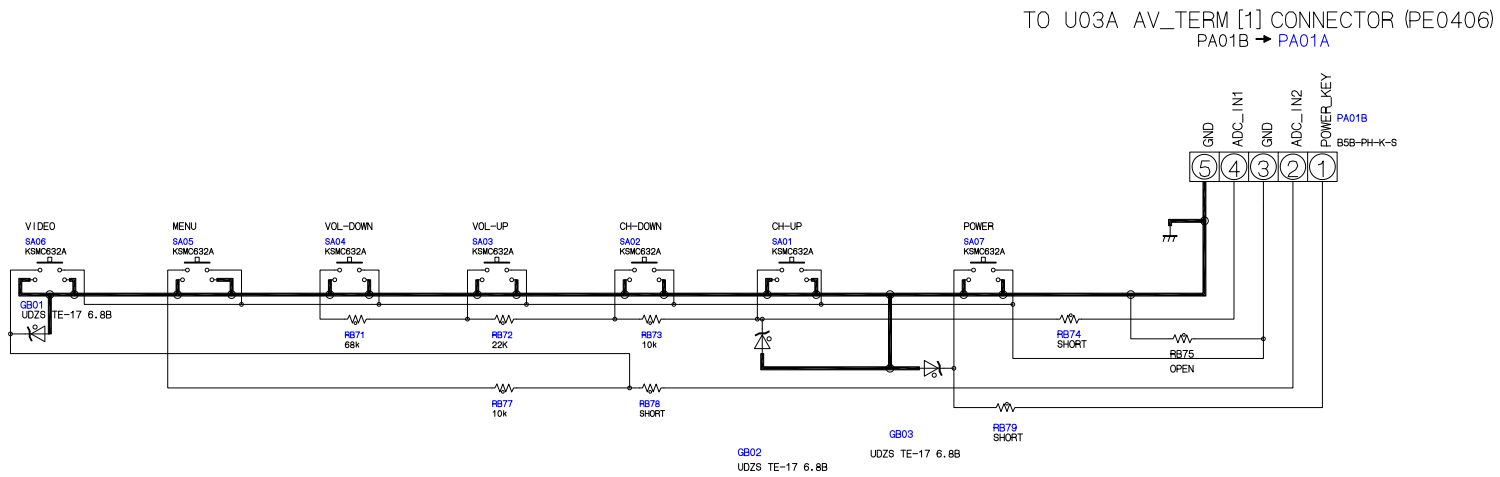

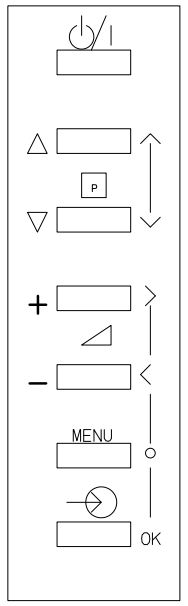

U03C KEY [17] KEY (PE0406)

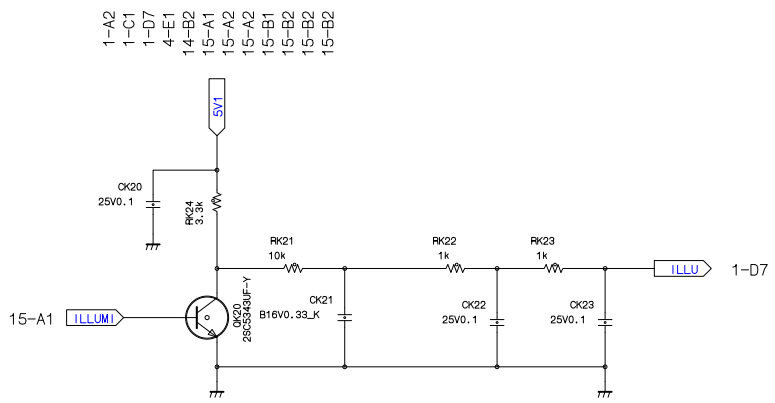

U03D ILLUM [16] Illumination (PE0406)

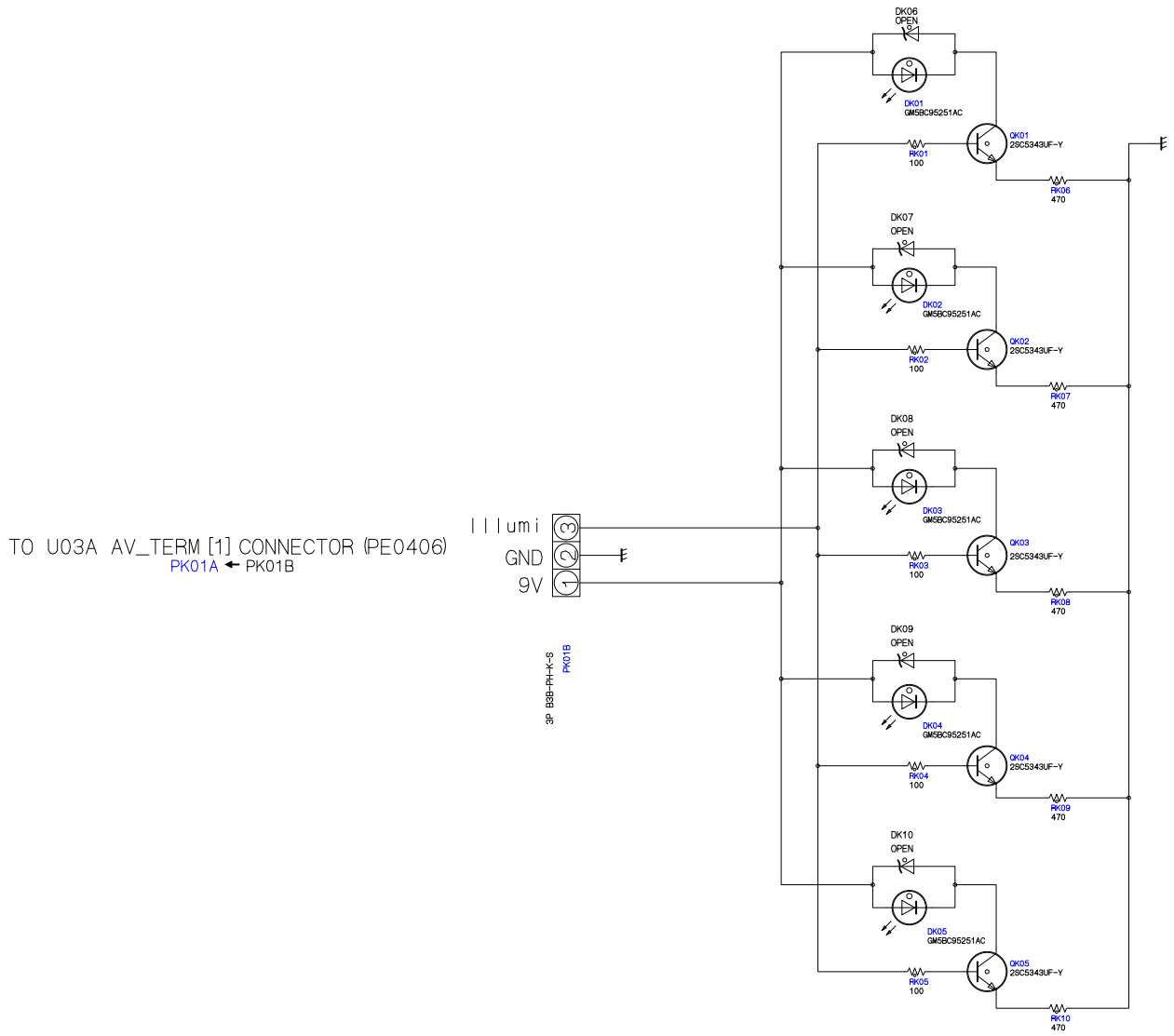

U03D ILLUM [19] Illumination (PE0406)

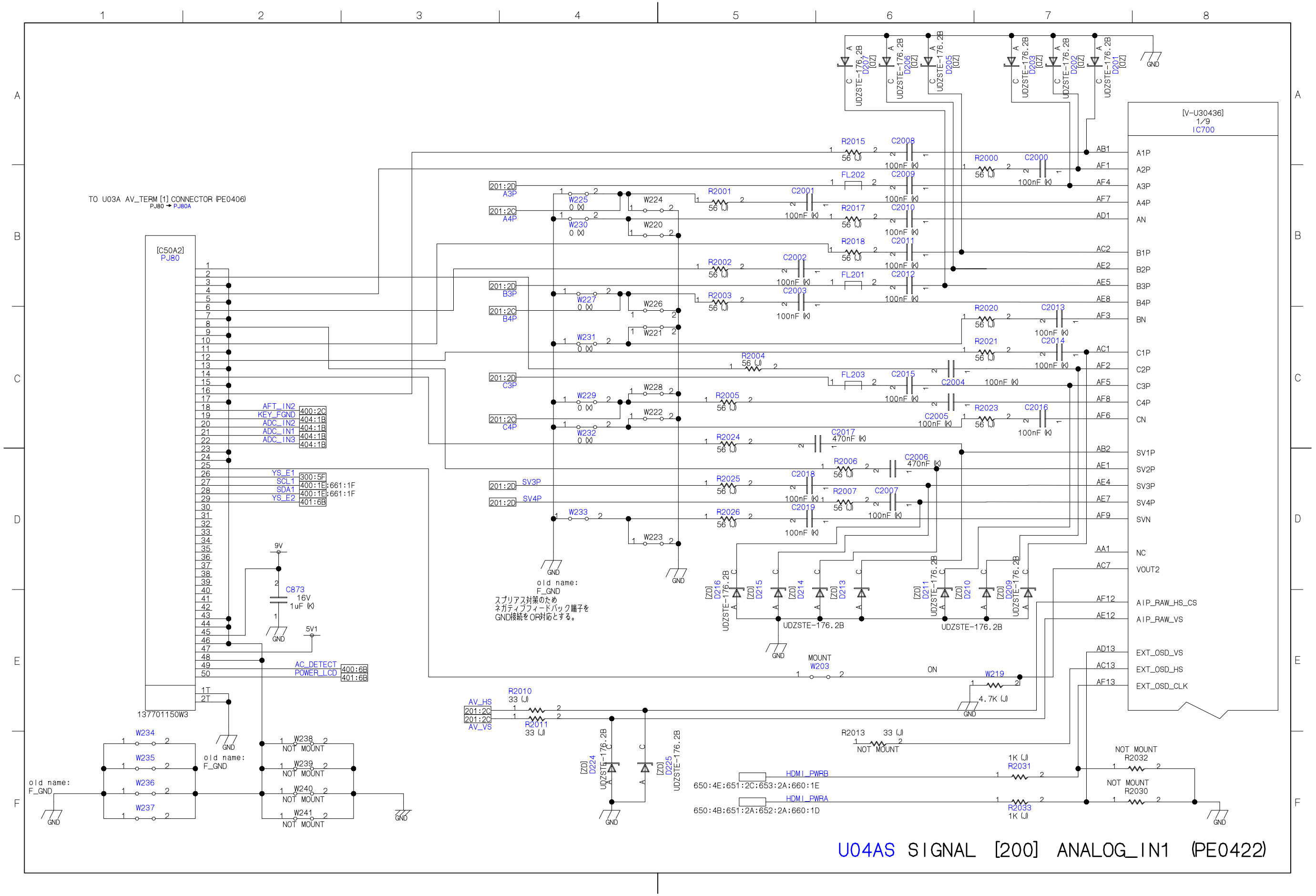

U04AS SIGNAL [200] ANALOG_IN1 (PE0422)

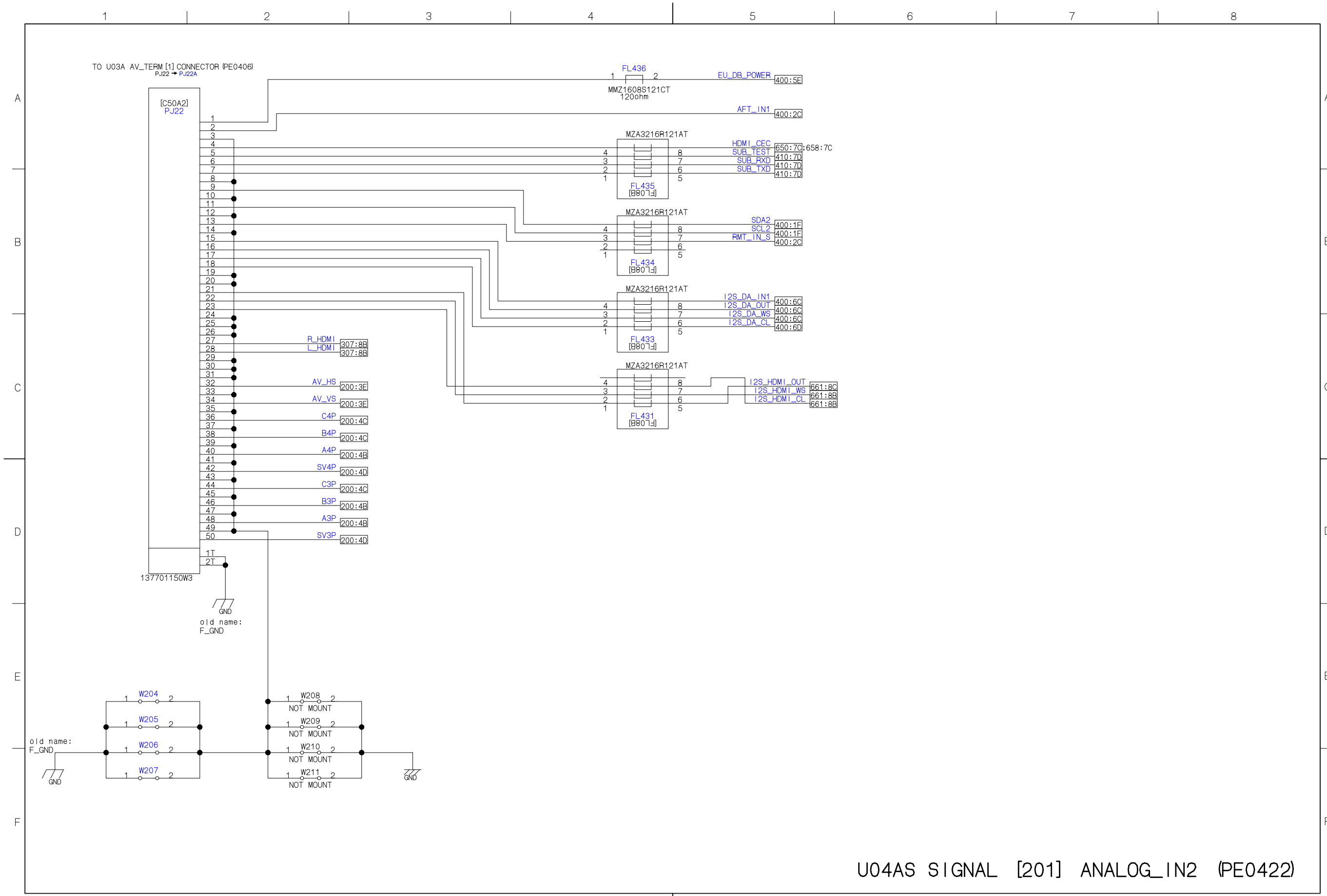

U04AS SIGNAL [201] ANALOG_IN2 (PE0422)

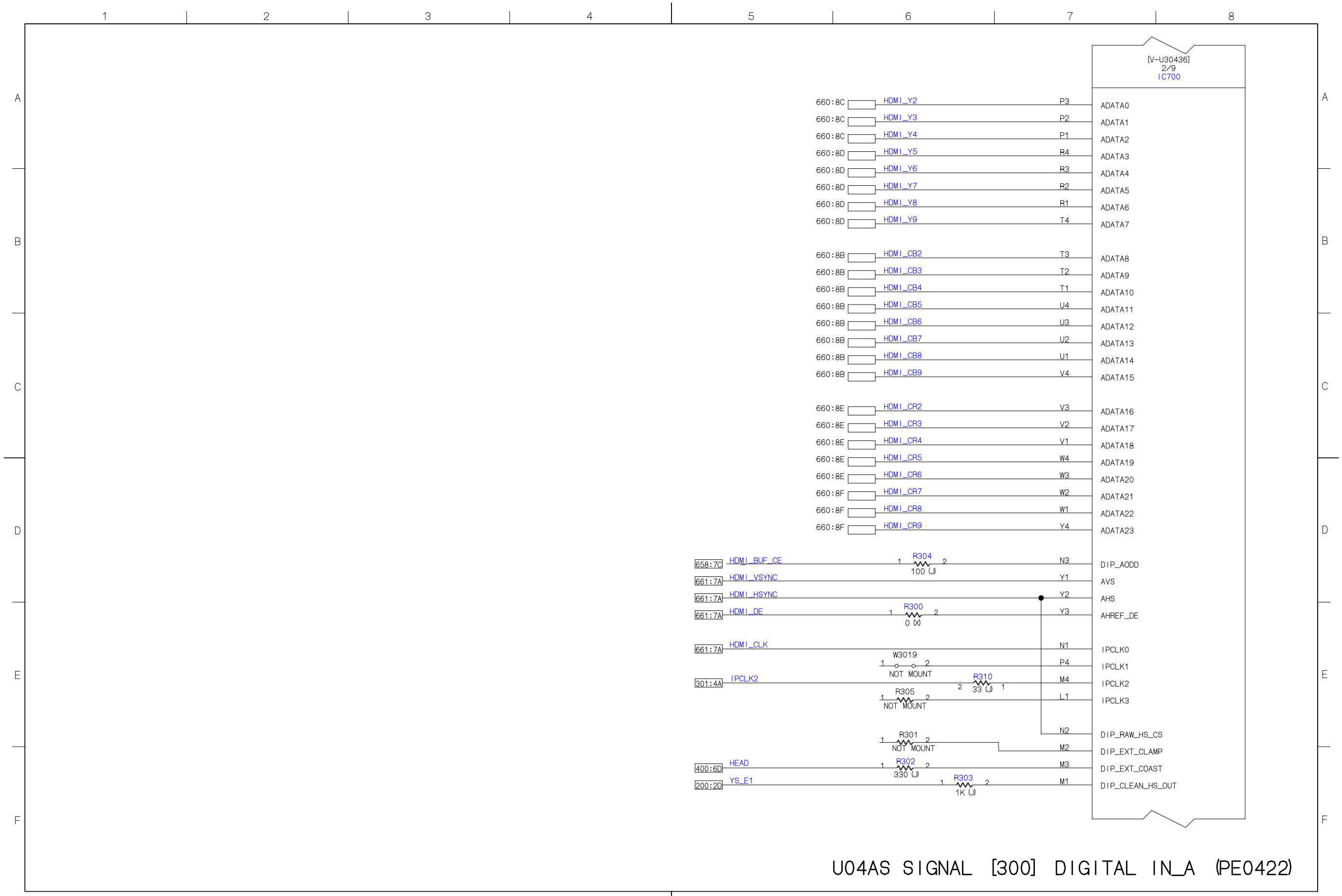

U04AS SIGNAL [300] DIGITAL IN_A (PE0422)

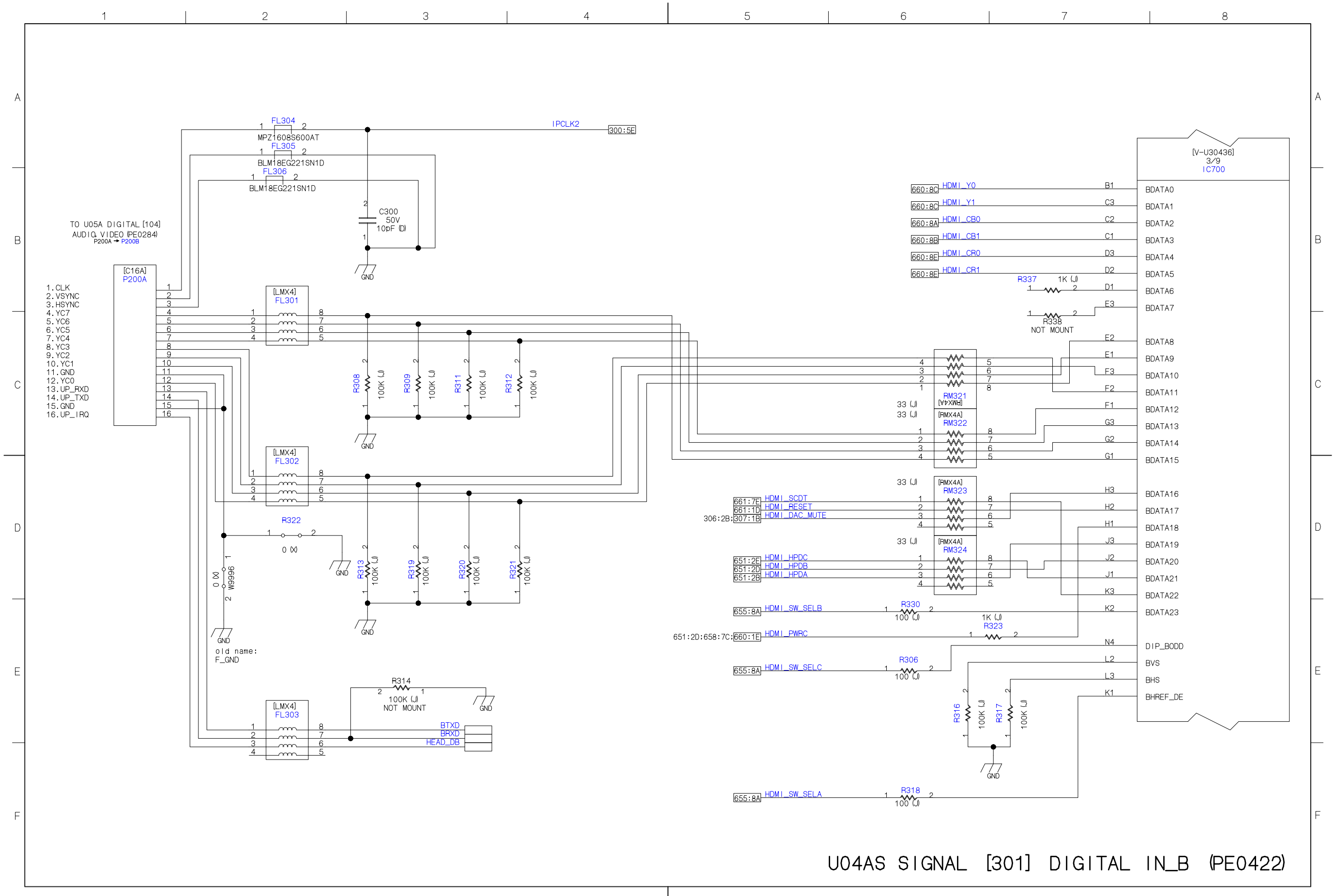

U04AS SIGNAL [301] DIGITAL IN_B (PE0422)

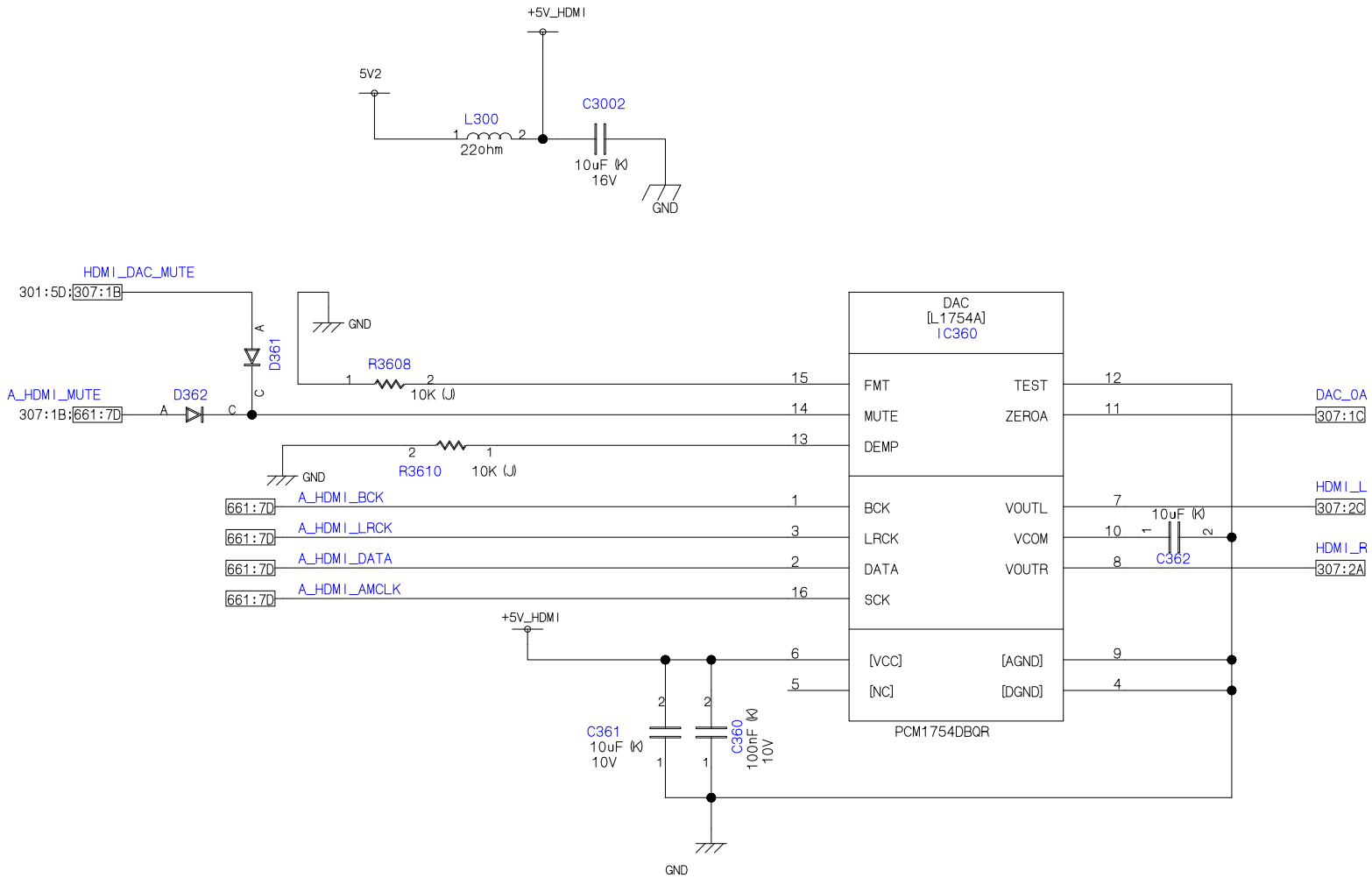

U04AS SIGNAL [306] HDMI_AUDIO_DAC (PE0422)

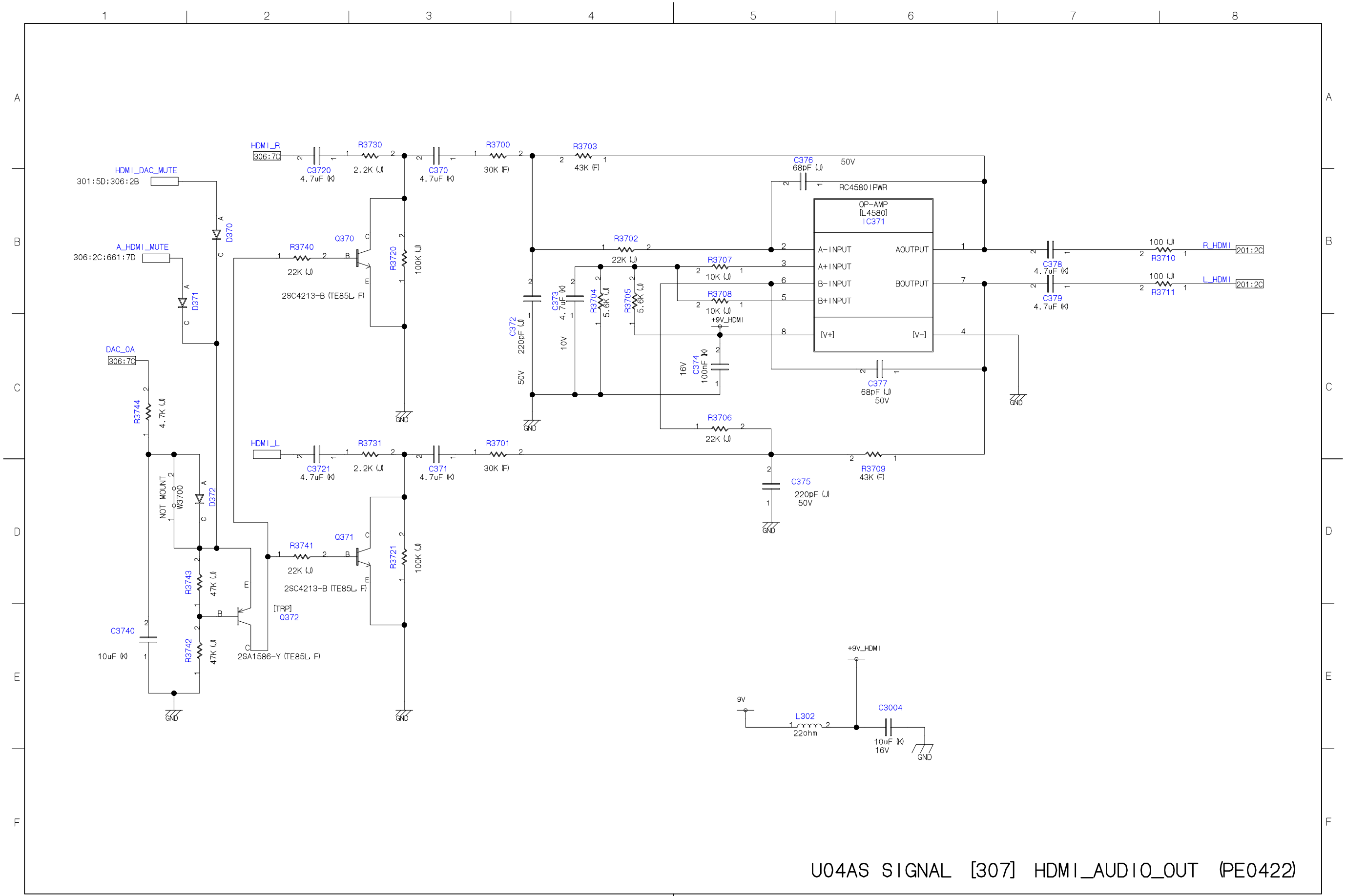

U04AS SIGNAL [307] HDMI_AUDIO_OUT (PE0422)

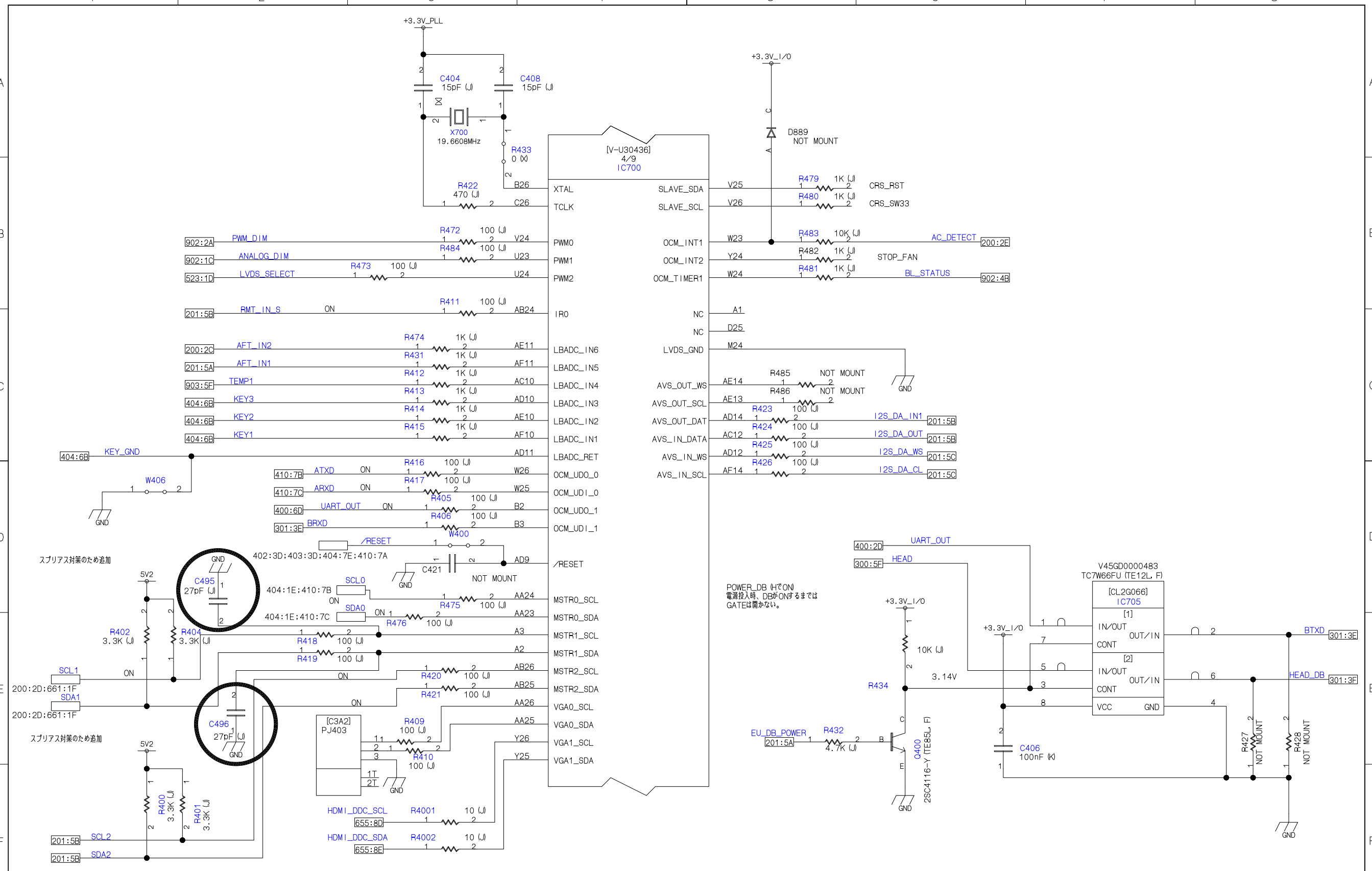

U04AS SIGNAL [400] MICRO I/O (PE0422)

402:3A;403:3B 402:3A;403:3B 402:3A;403:3B 402:3A;403:3B;409:1B 402:3A;403:3B;409:1B 402:3A;403:3B;409:1

401:1A:403:3B 401:1A:403:3B 401:1A:403:3B 401:1A:403:3B 401:1A:403:3B 401:1A:403:3B 401:1A:403:3B 401:1A:403:3B 401:1A:403:3B 401:1A:403:3B 401:1A:403:3B 401:1A:403:3B 401:1A:403:3B 401:1A:403:3B 401:1A:403:3B
401:1A:403:3B:409:1B 401:1A:403:3B:409:1B 401:1A:403:3B:409:1B 401:1A:403:3B:409:1B 401:1A:403:3B:409:1B 401:1A:403:3B:409:1B 401:1A:403:3B:409:1B 401:1A:403:3B:409:1B 401:1A:403:3B:409:1B 401:1A:403:3B:409:1B
401:1A:403:3B:409:1B 401:1A:403:3B:409:1B 401:1A:403:3B 401:1A:403:3B 401:1A:403:3B

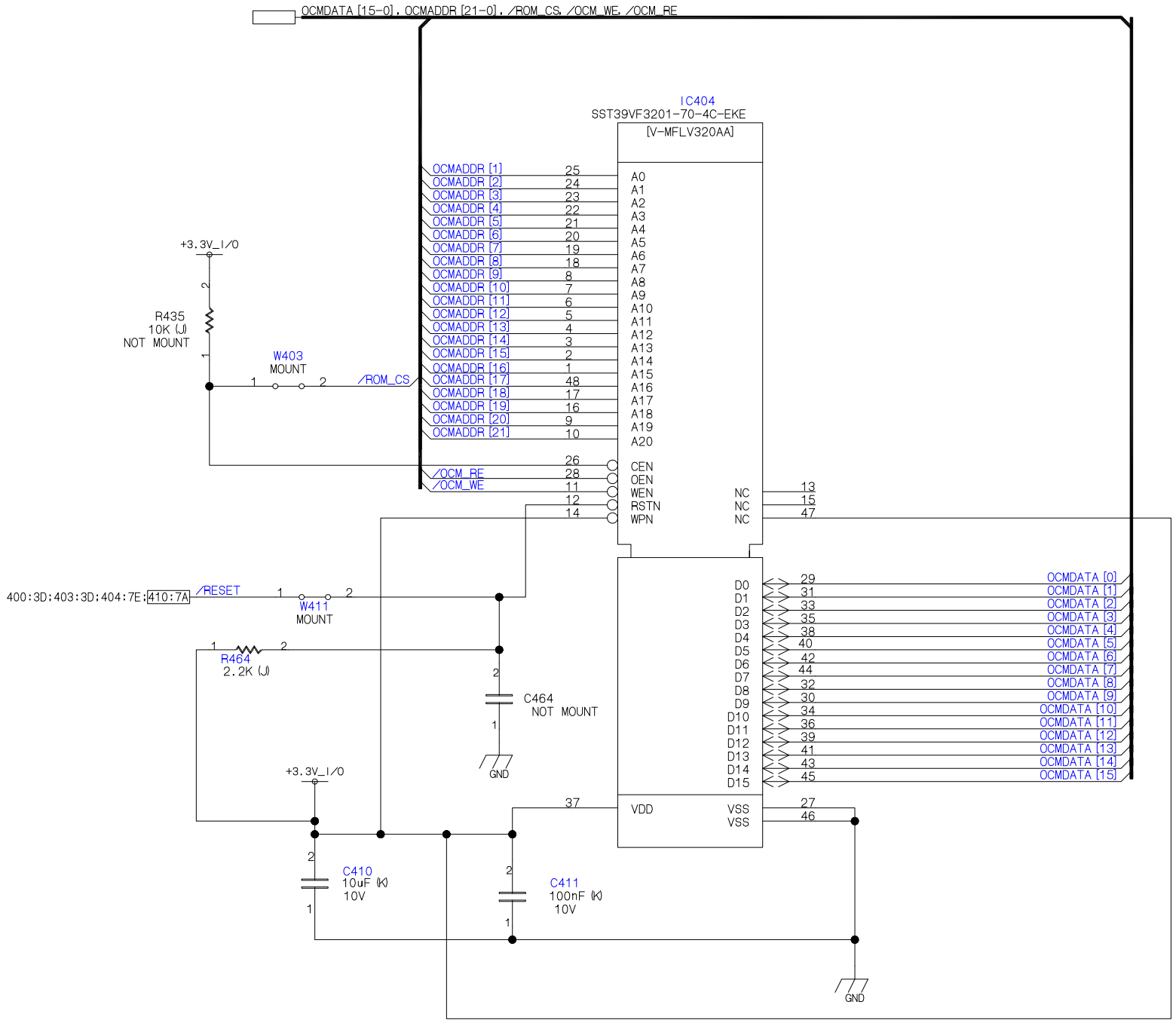

U04AS SIGNAL [402] FLASH MEMORY (PE0422)

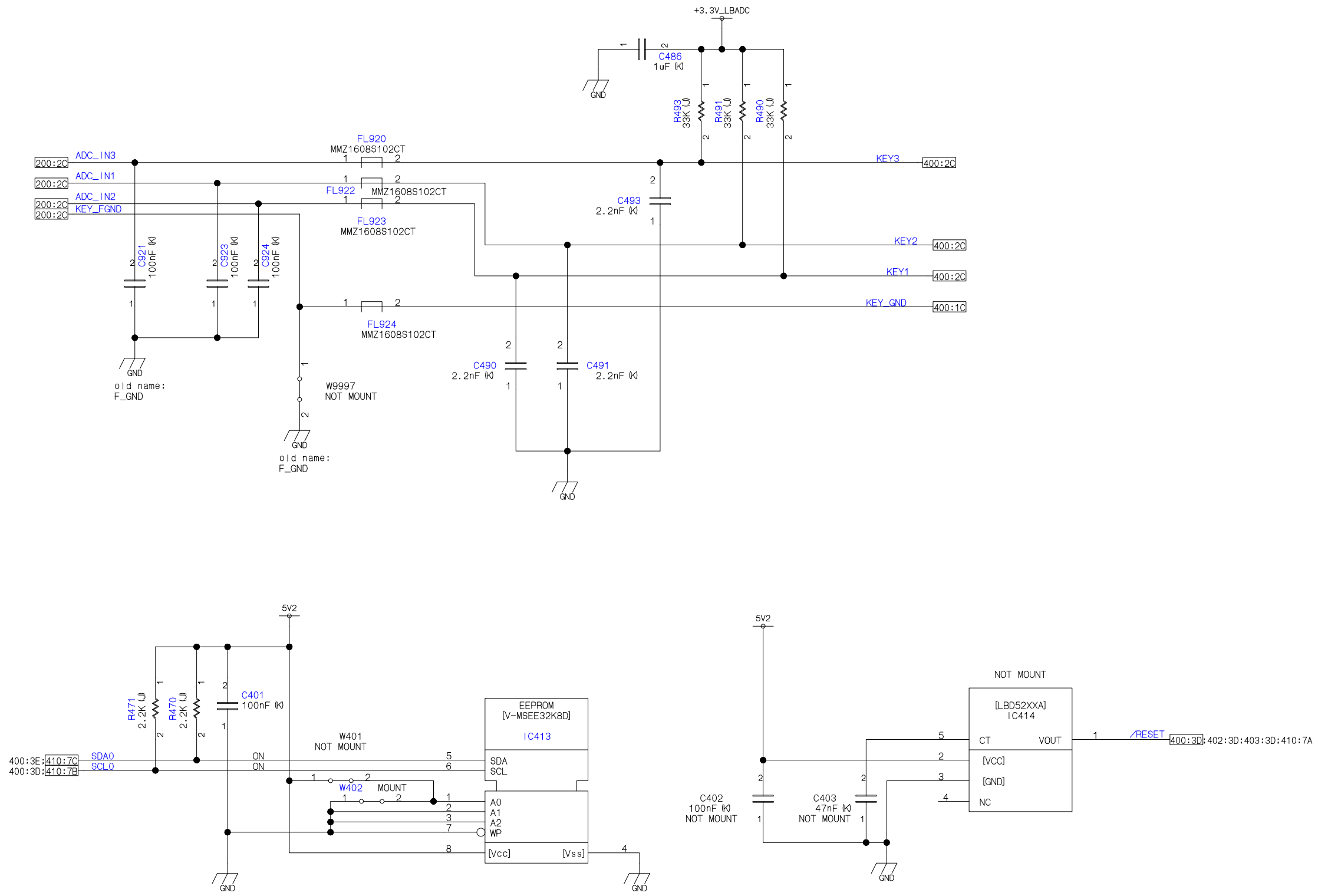

U04AS SIGNAL [404] E2PROM OTHER (PE0422)

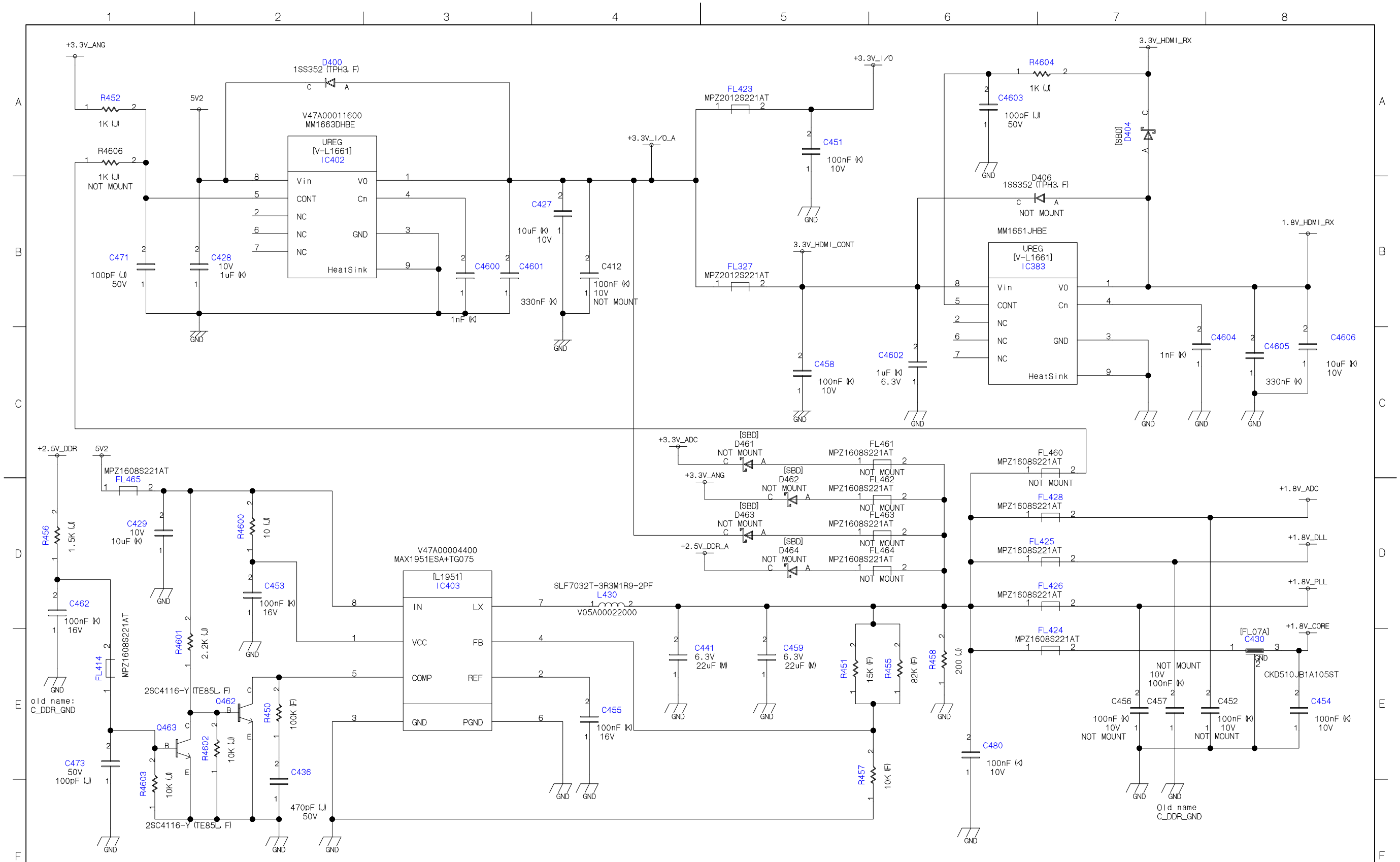

U04AS SIGNAL [406] CORTEZ REG 1 (PE0422)

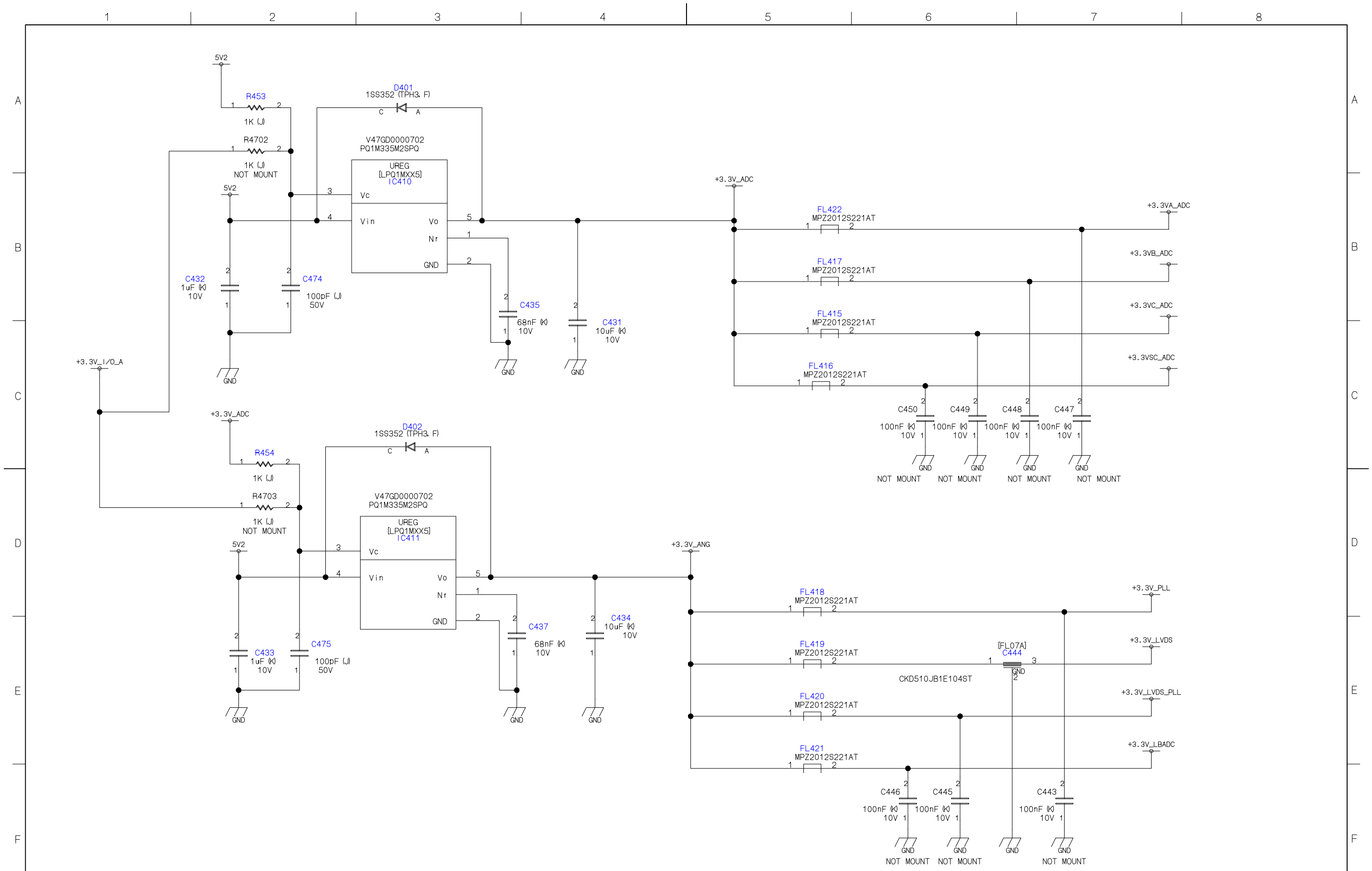

U04AS SIGNAL [407] CORTEZ REG 2 (PE0422)

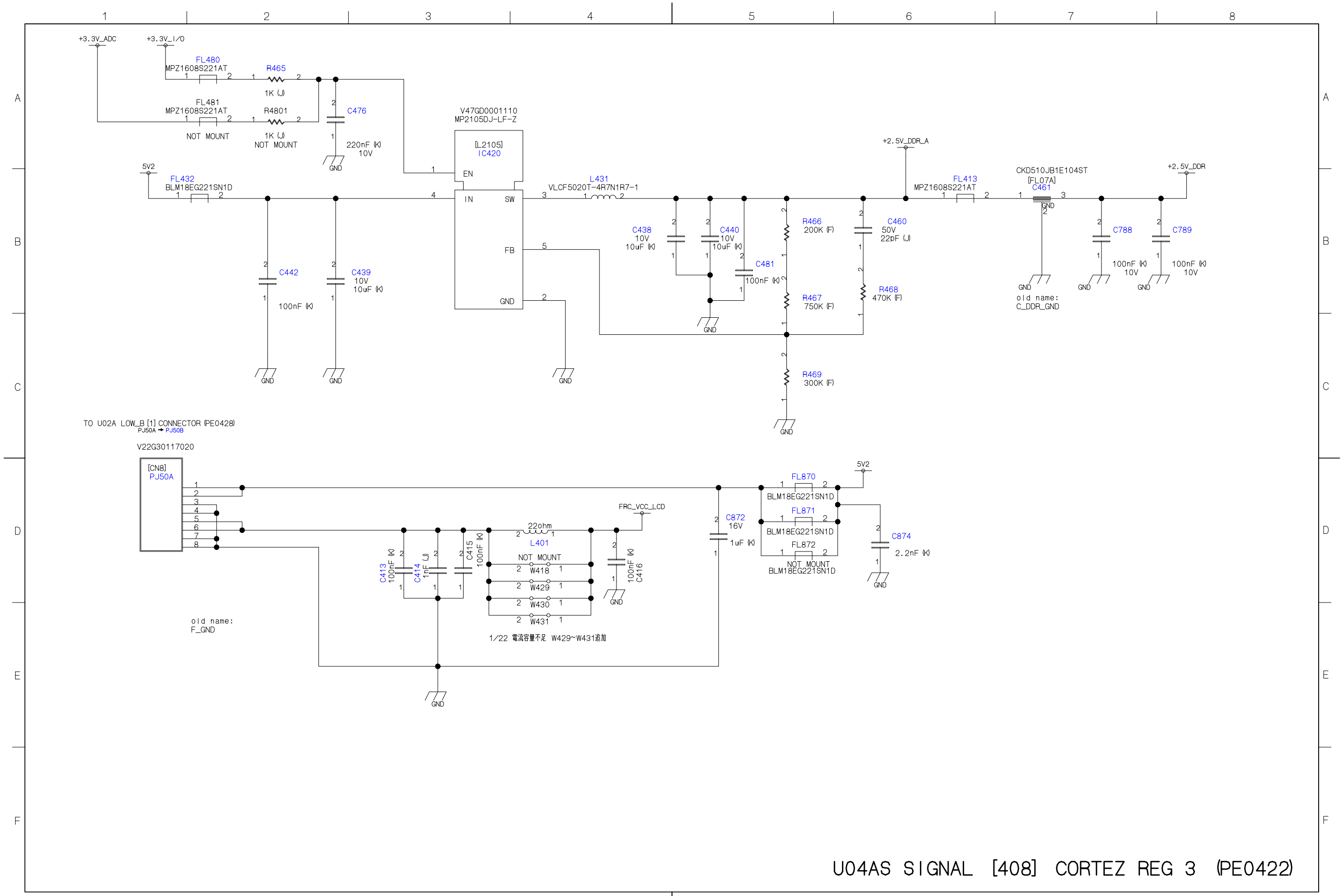

U04AS SIGNAL [408] CORTEZ REG 3 (PE0422)

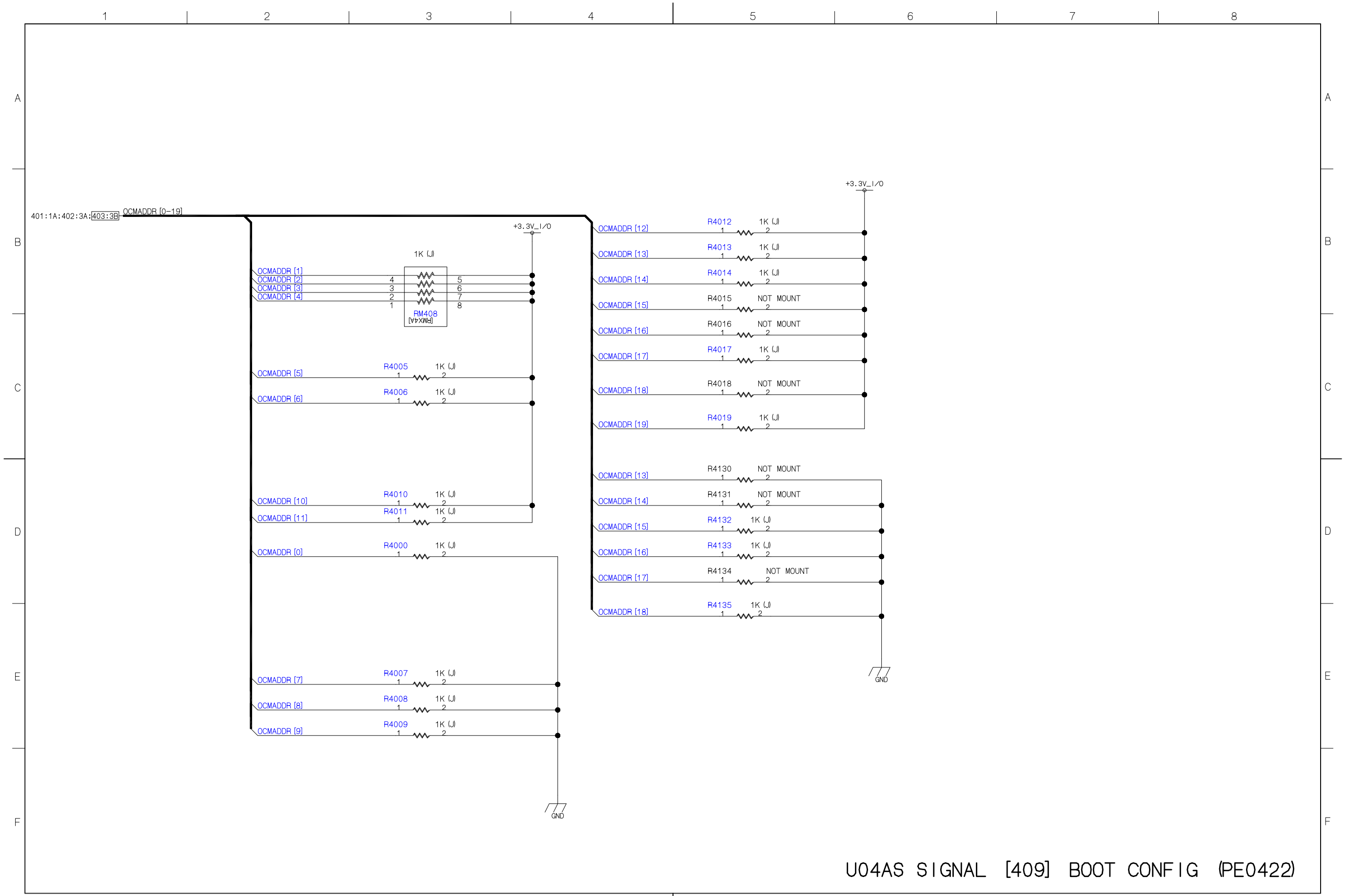

U04AS SIGNAL [409] BOOT CONFIG (PE0422)

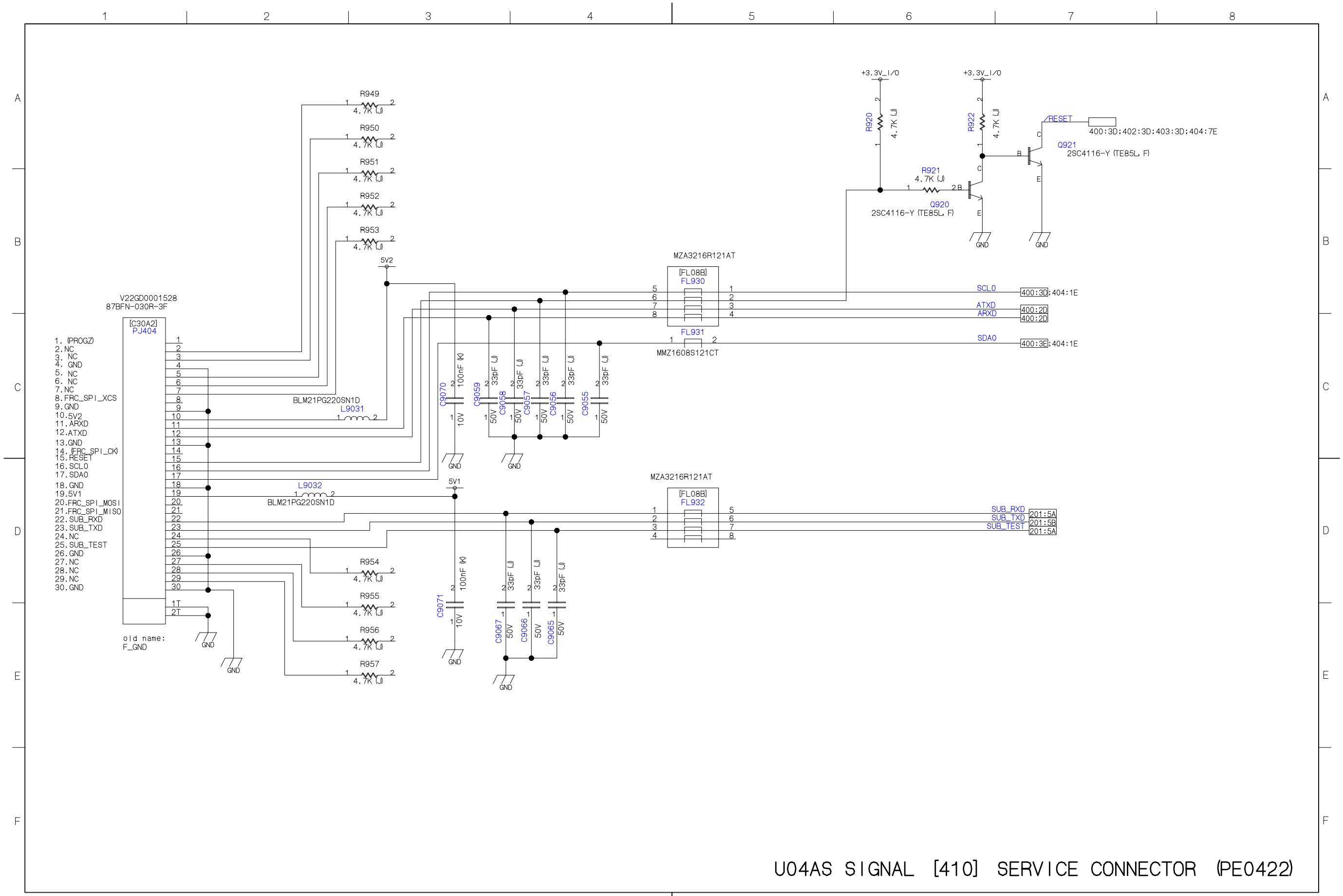

U04AS SIGNAL [410] SERVICE CONNECTOR (PE0422)

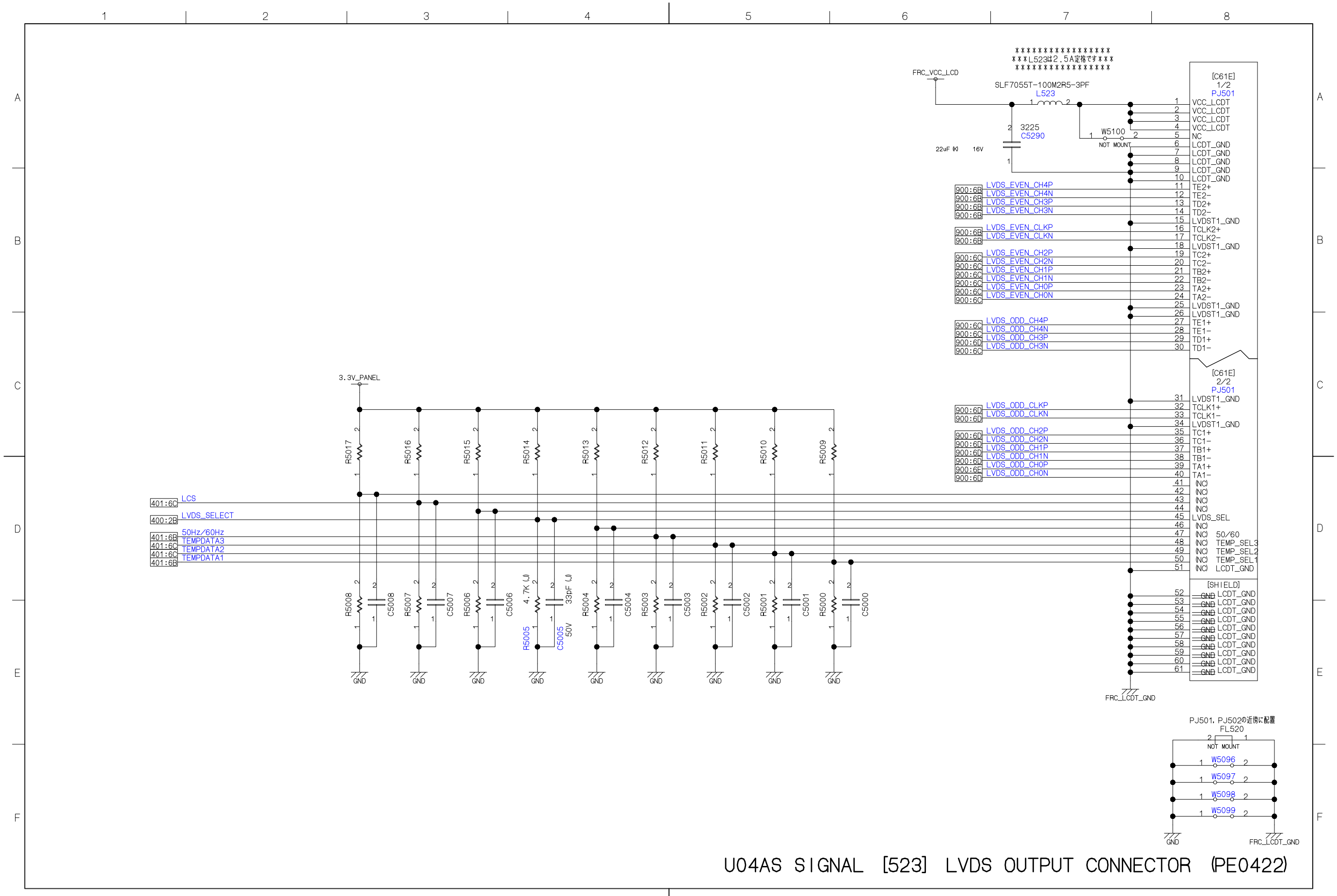

U04AS SIGNAL [523] LVDS OUTPUT CONNECTOR (PE0422)

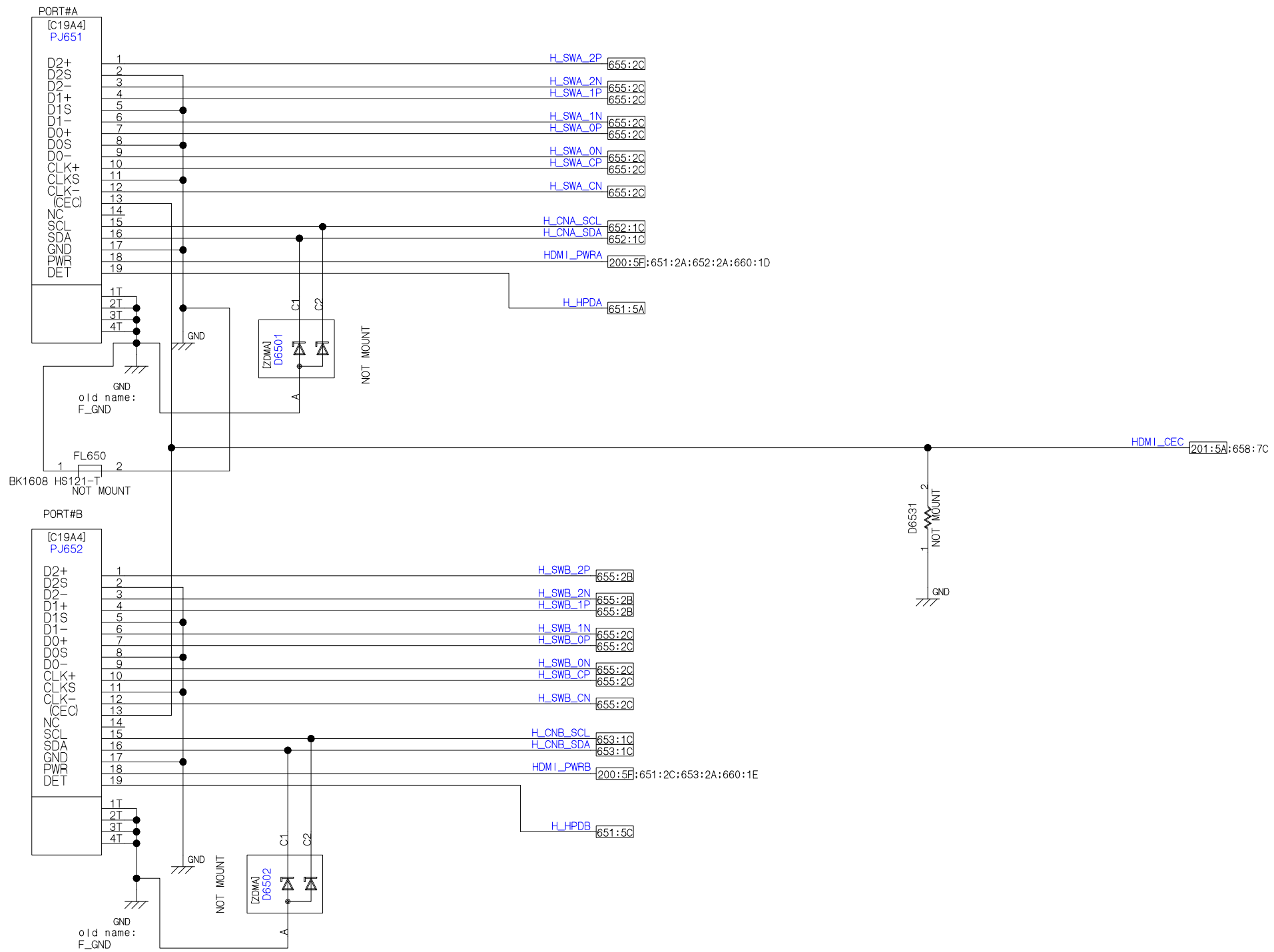

U04AS SIGNAL [650] HDMI (CONNECTOR), HPD (PE0422)

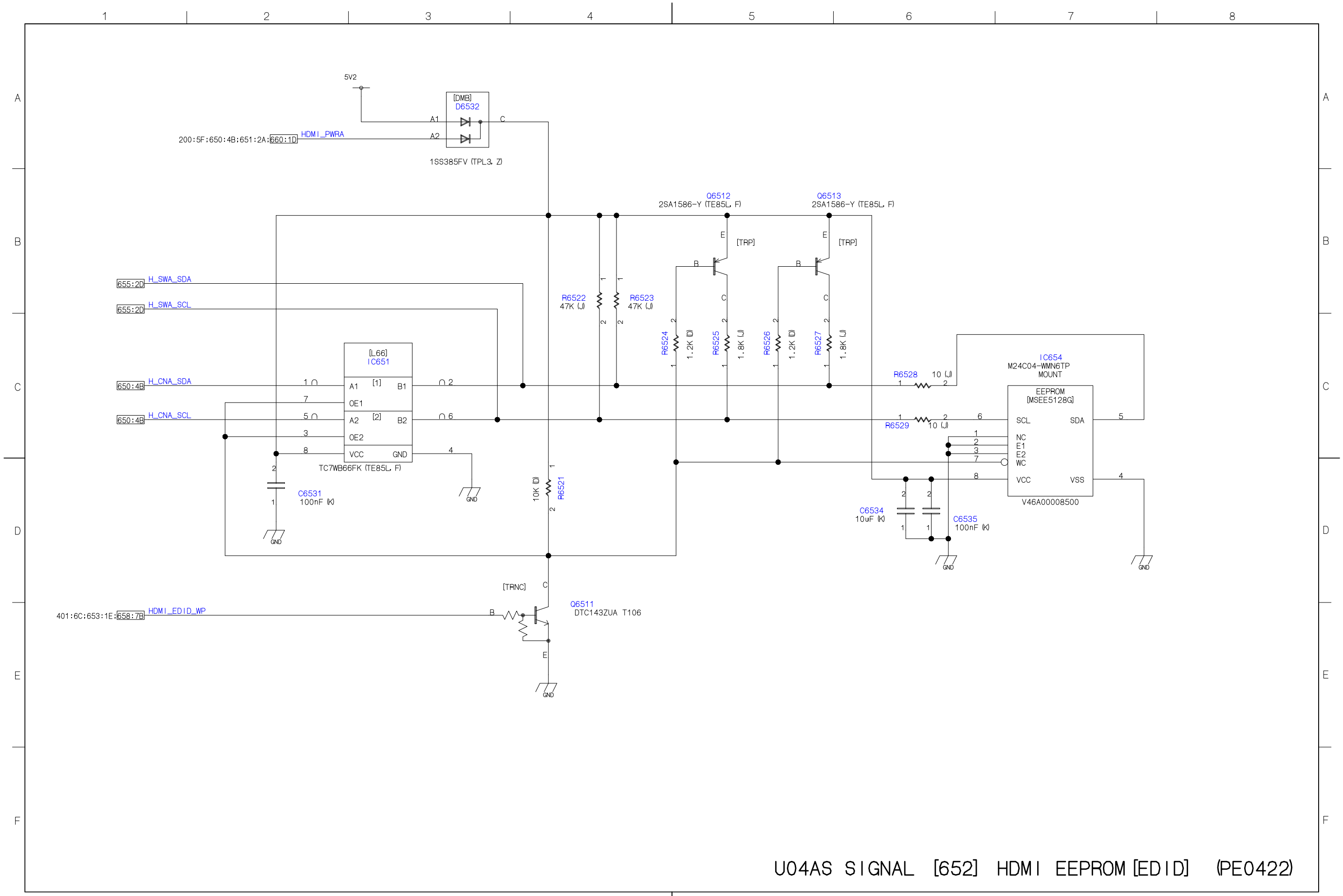

U04AS SIGNAL [652] HDMI EEPROM [EDID] (PE0422)

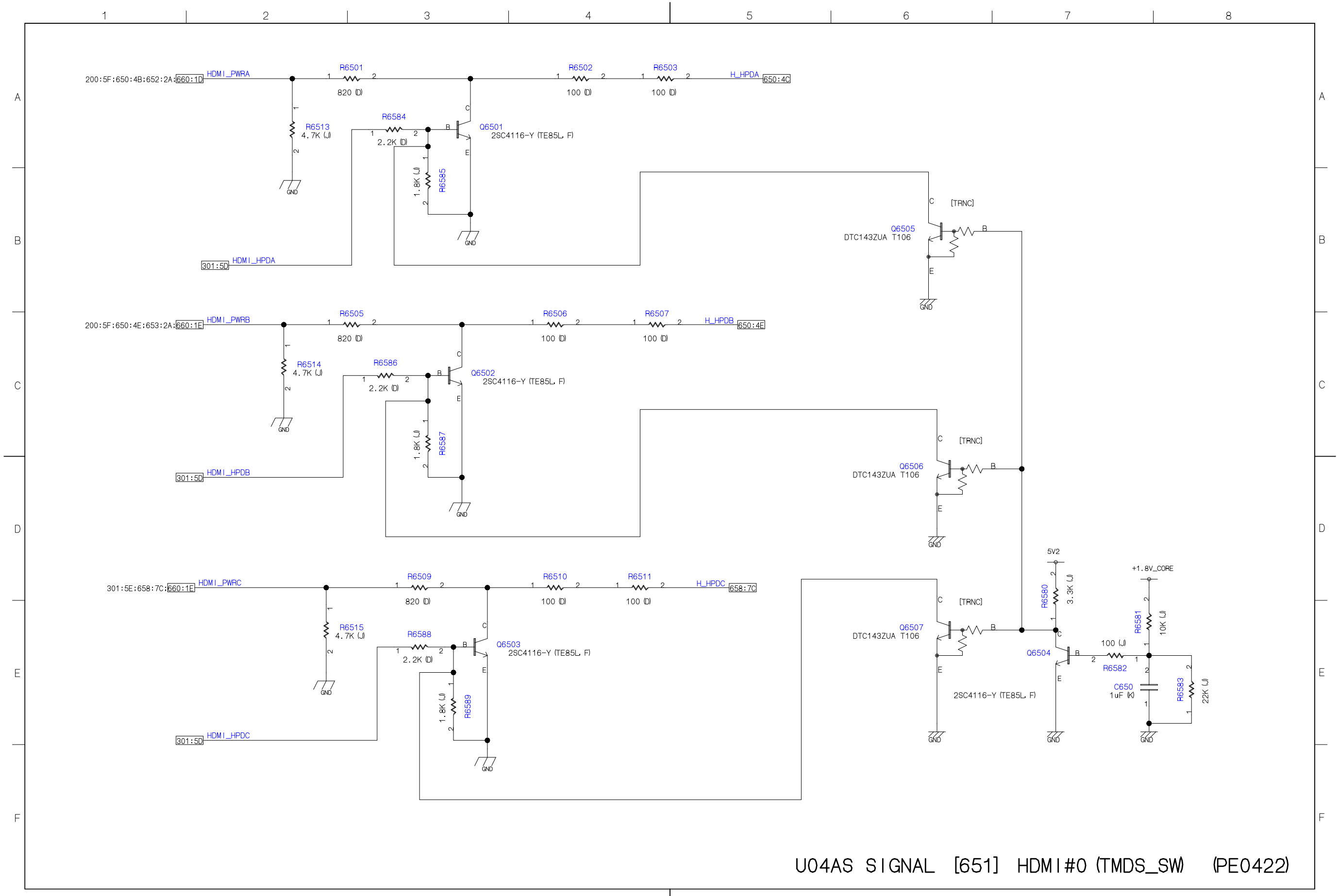

U04AS SIGNAL [651] HDMI#0 (TMDS_SW) (PE0422)

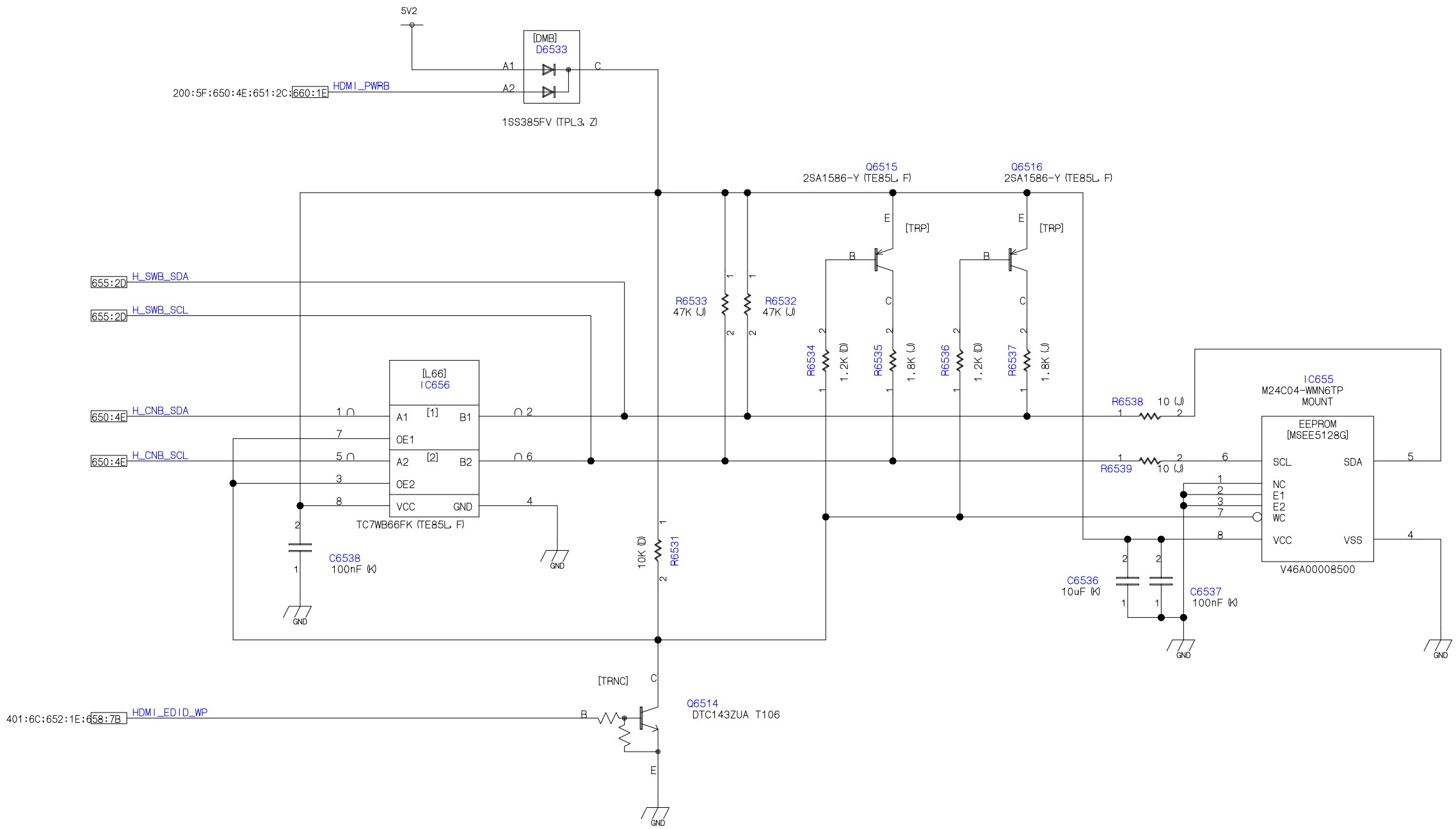

U04AS SIGNAL [653] HDMI EEPROM [EDID] (PE0422)

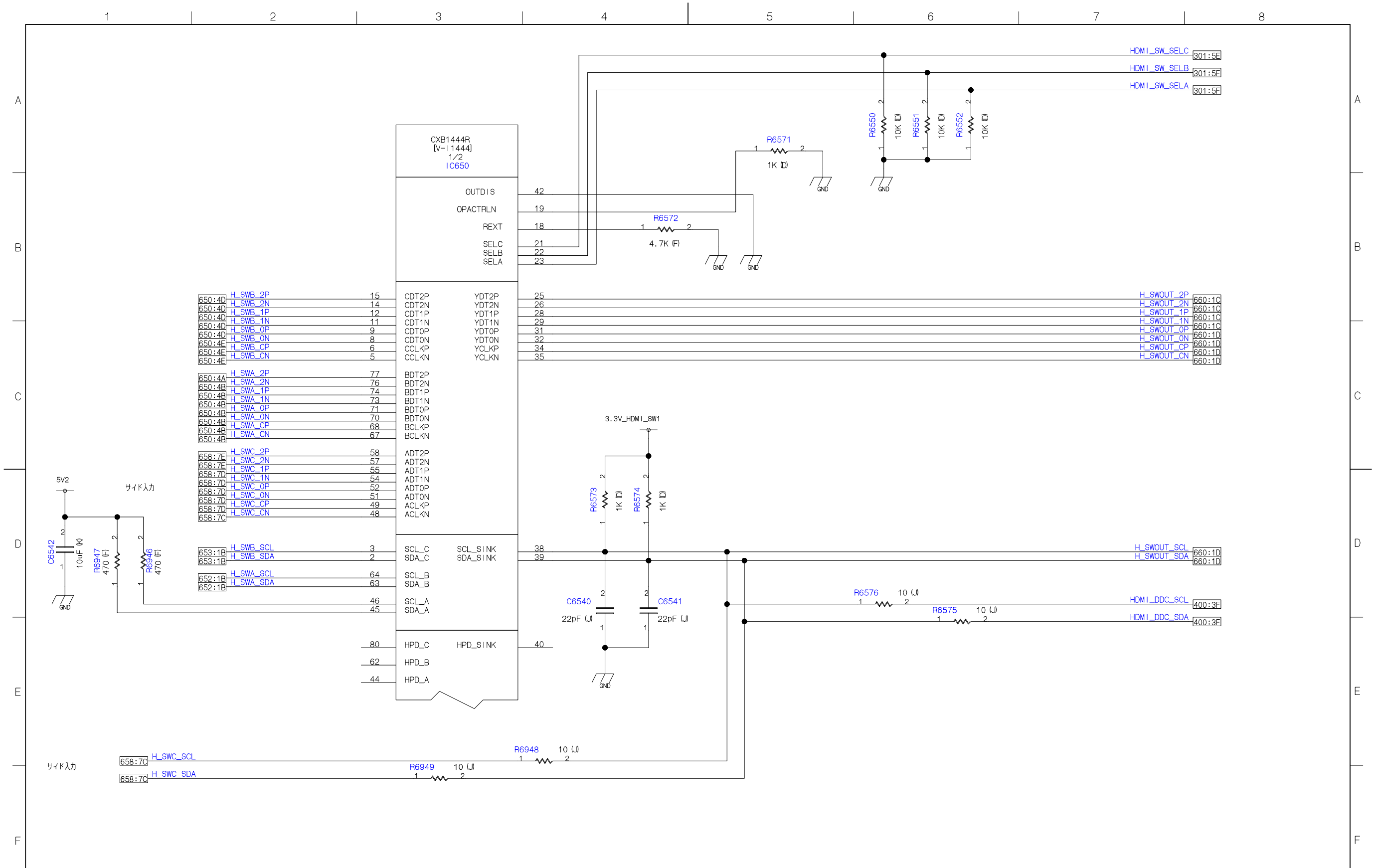

U04AS SIGNAL [655] TMDS SW (PE0422)

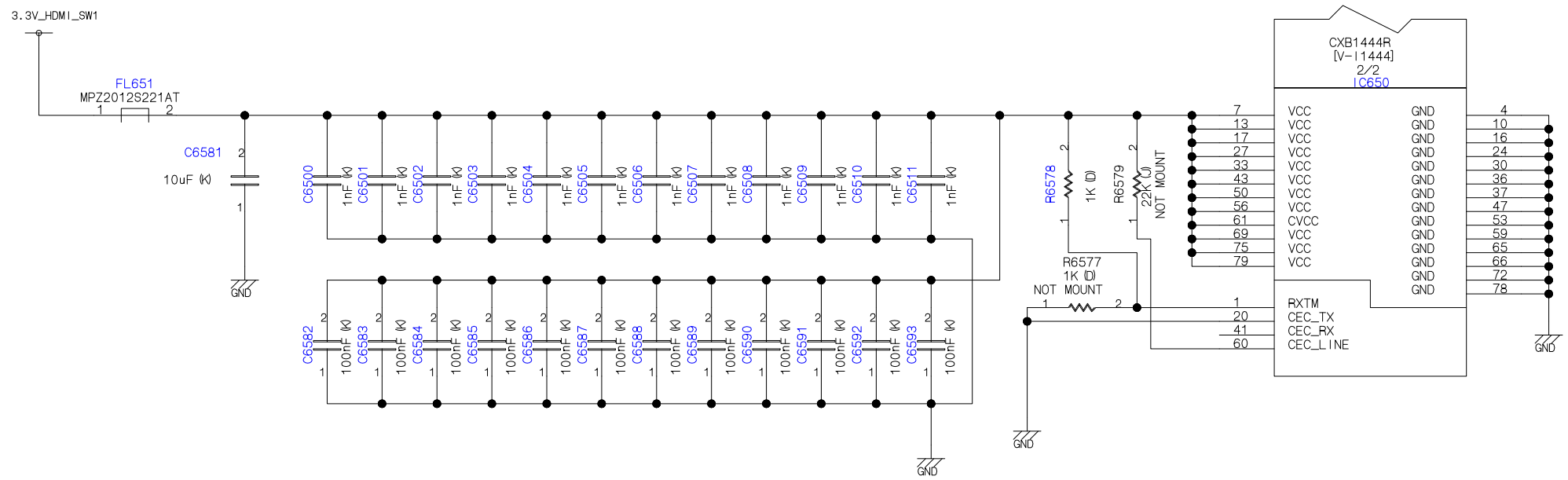

U04AS SIGNAL [657] TMDS SW (PE0422)

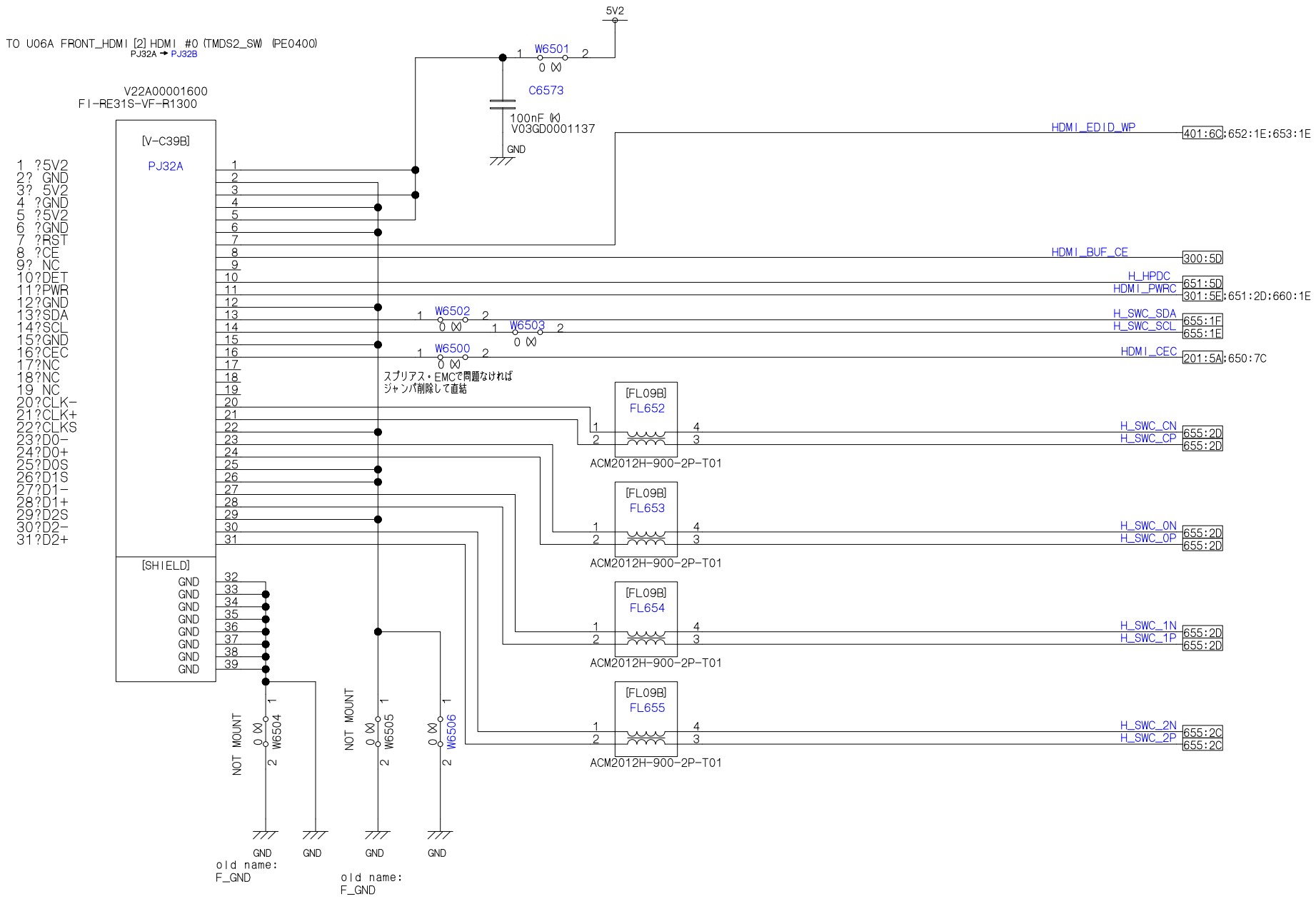

U04AS SIGNAL [658] HDMI (To_Side_CONNECTOR) (PE0422)

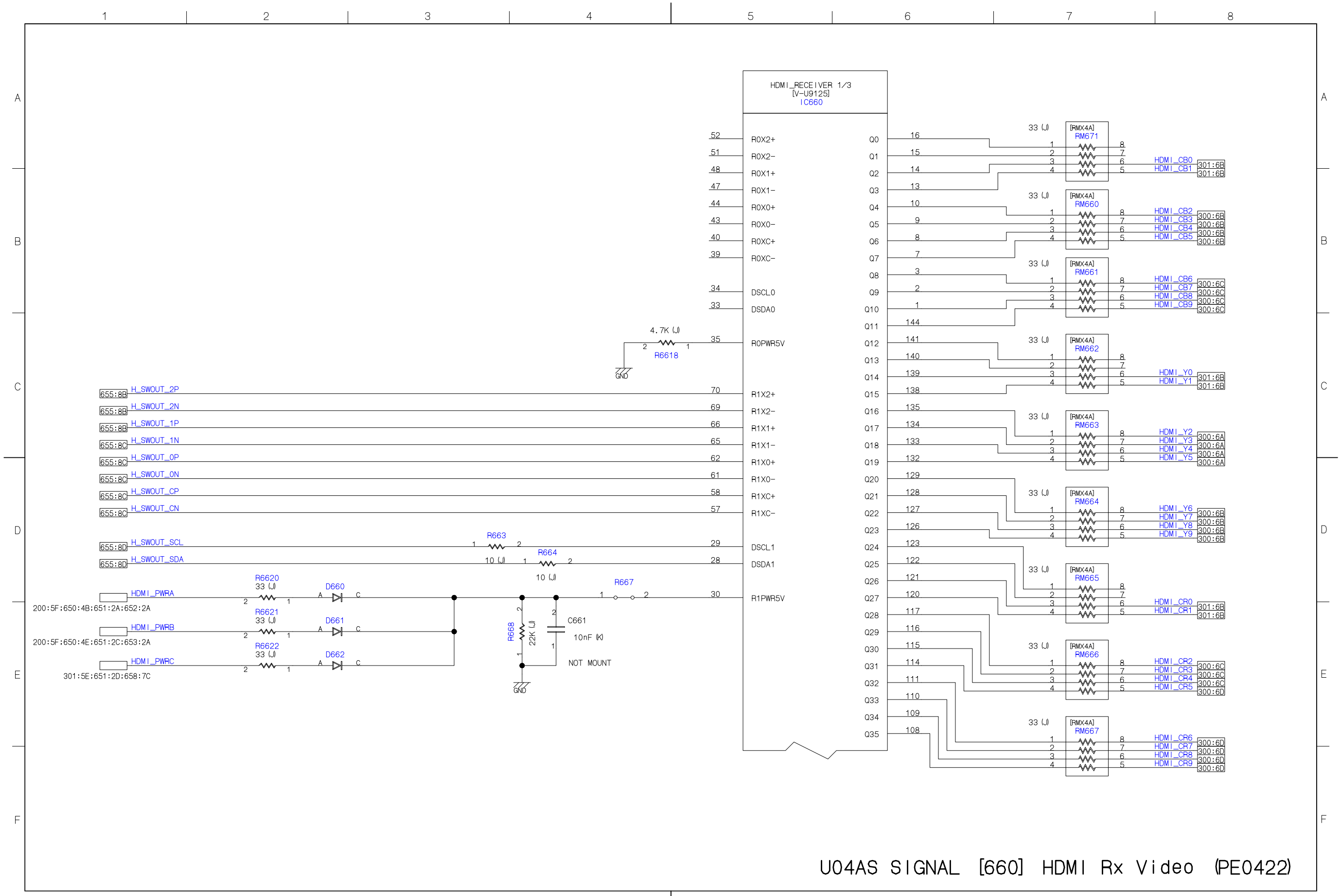

U04AS SIGNAL [660] HDMI Rx Video (PE0422)

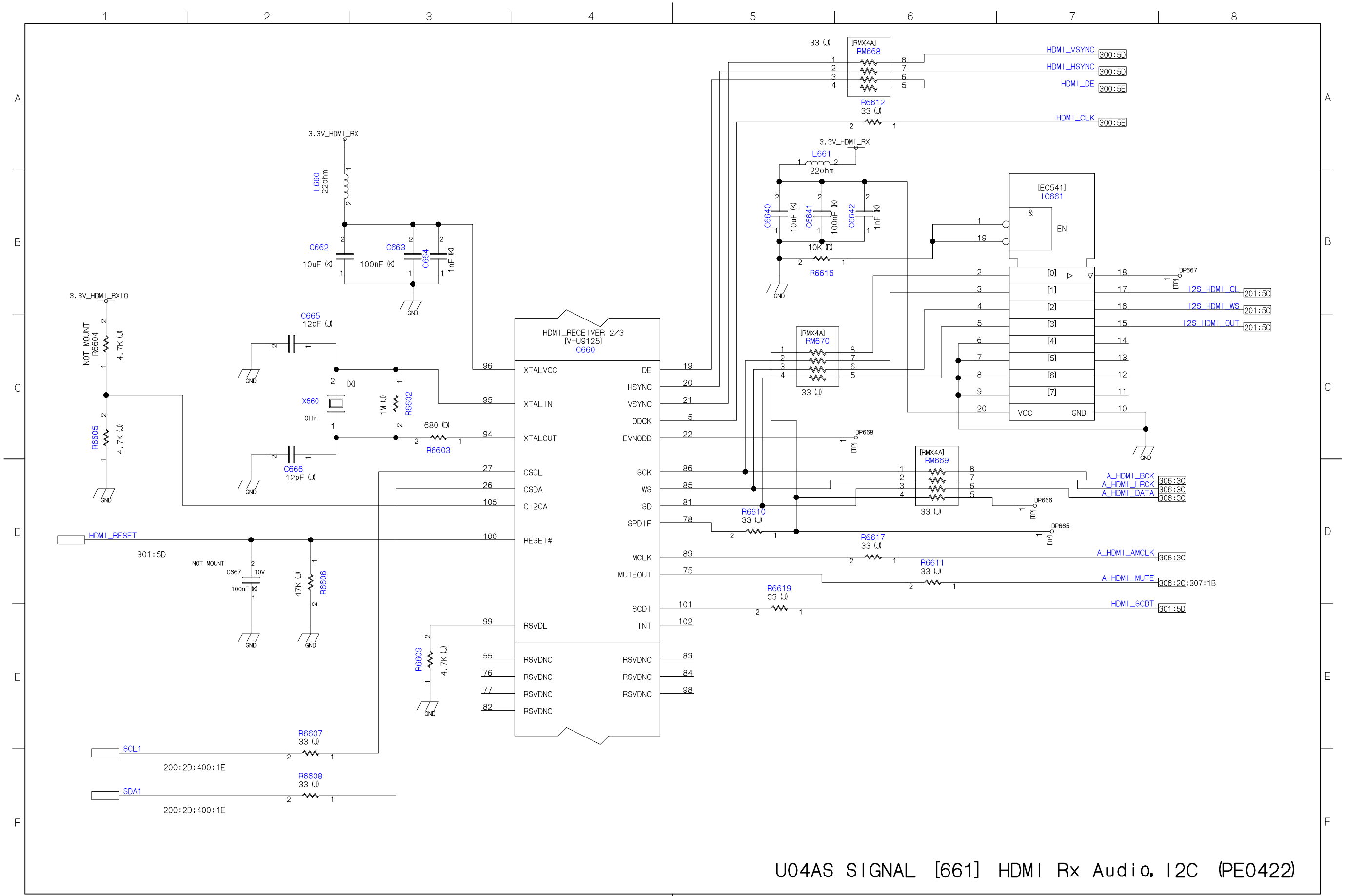

U04AS SIGNAL [661] HDMI Rx Audio, I2C (PE0422)

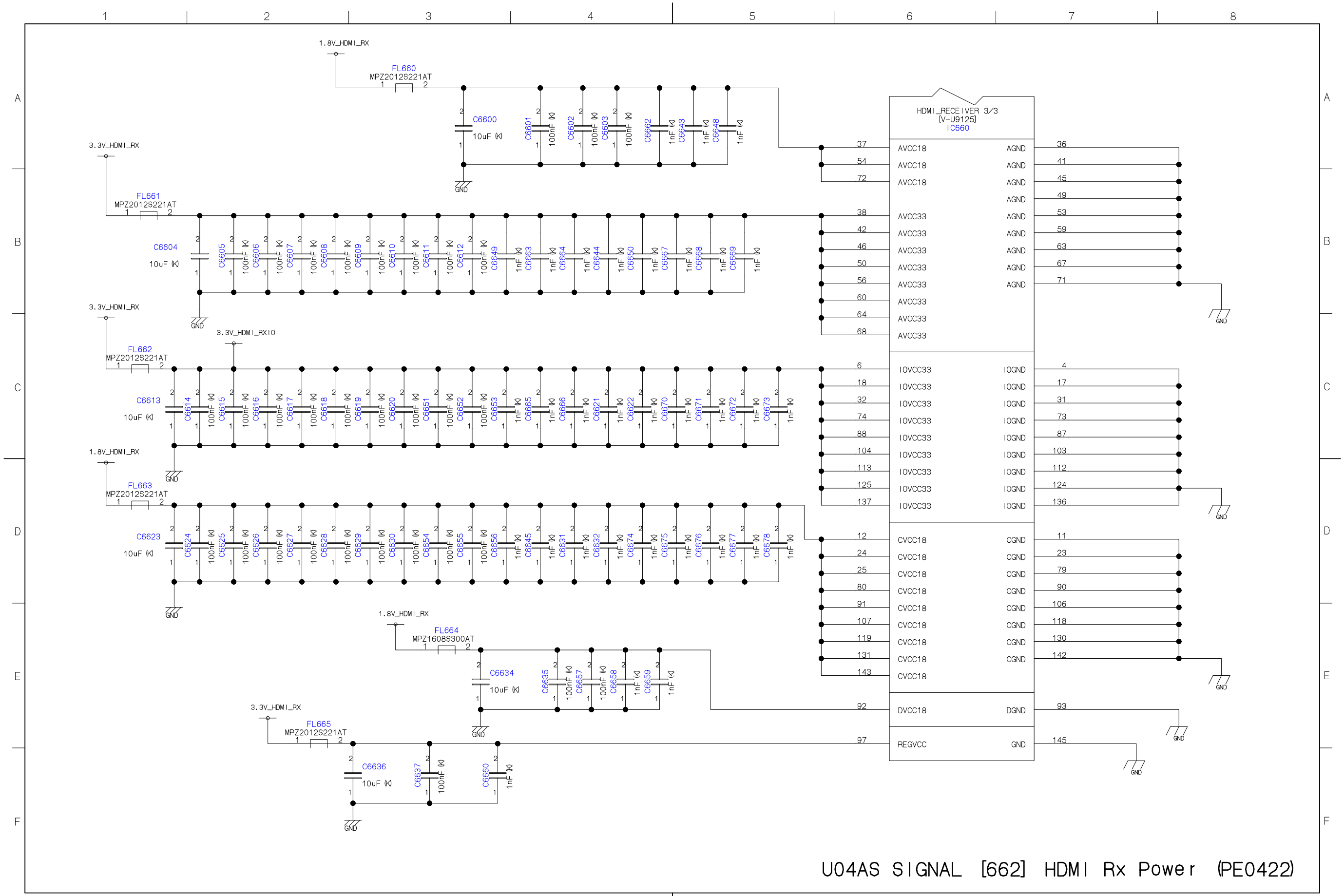

U04AS SIGNAL [662] HDMI Rx Power (PE0422)

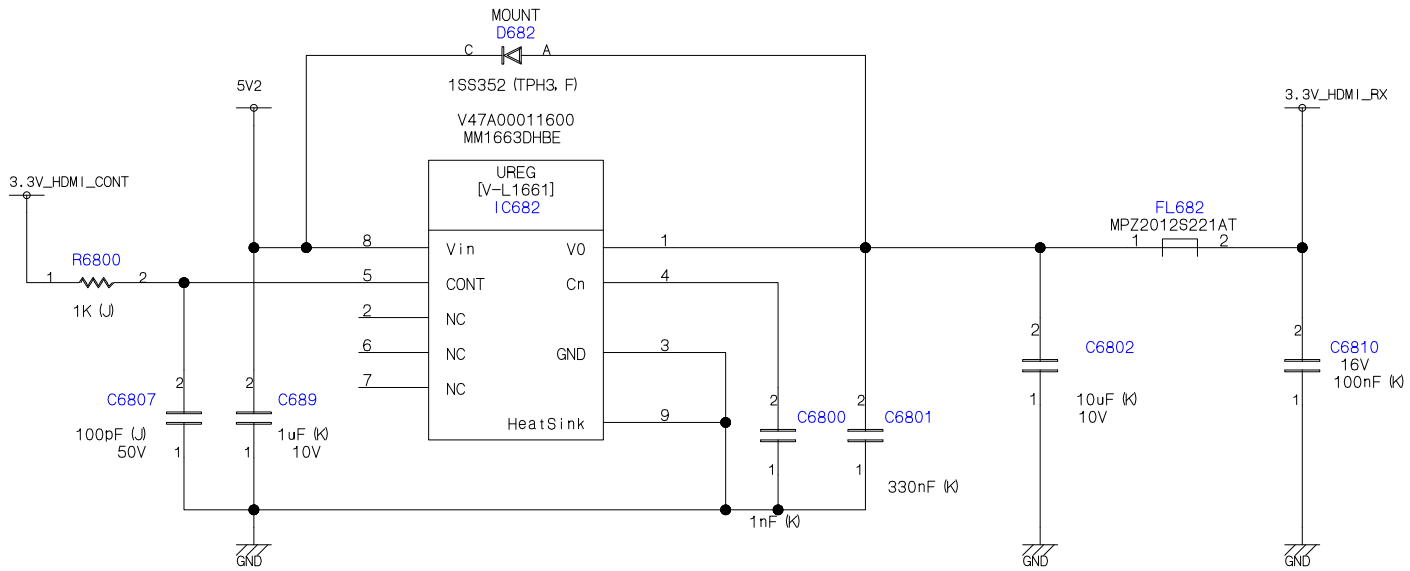

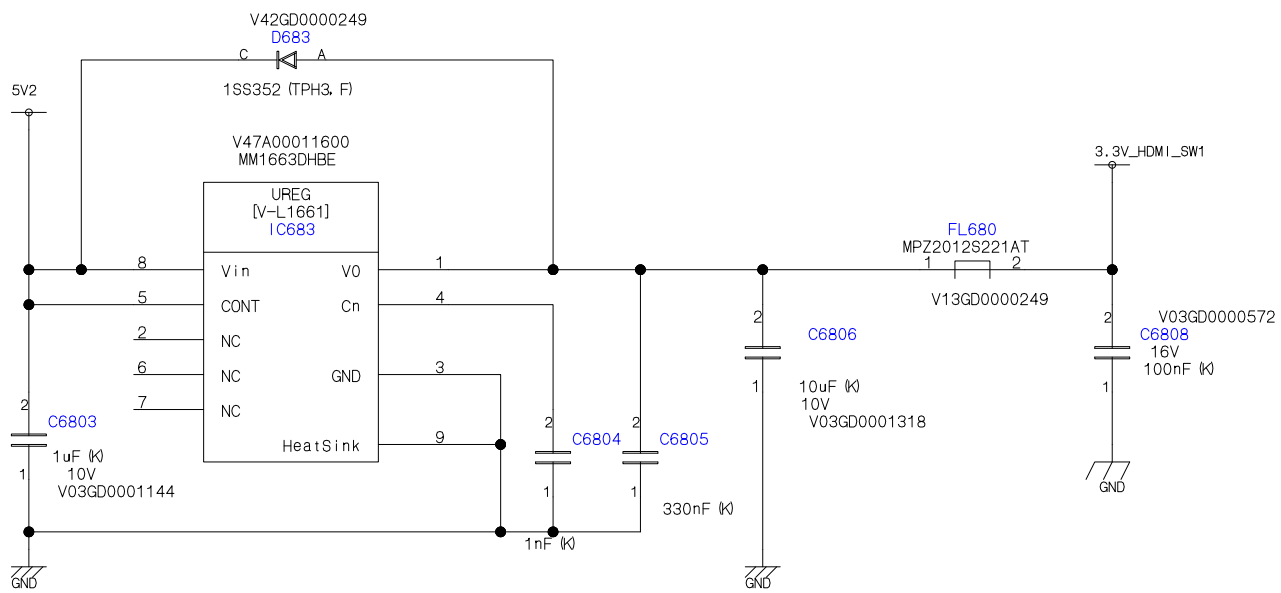

U04AS SIGNAL [680] HDMI Power Reg. (PE0422)

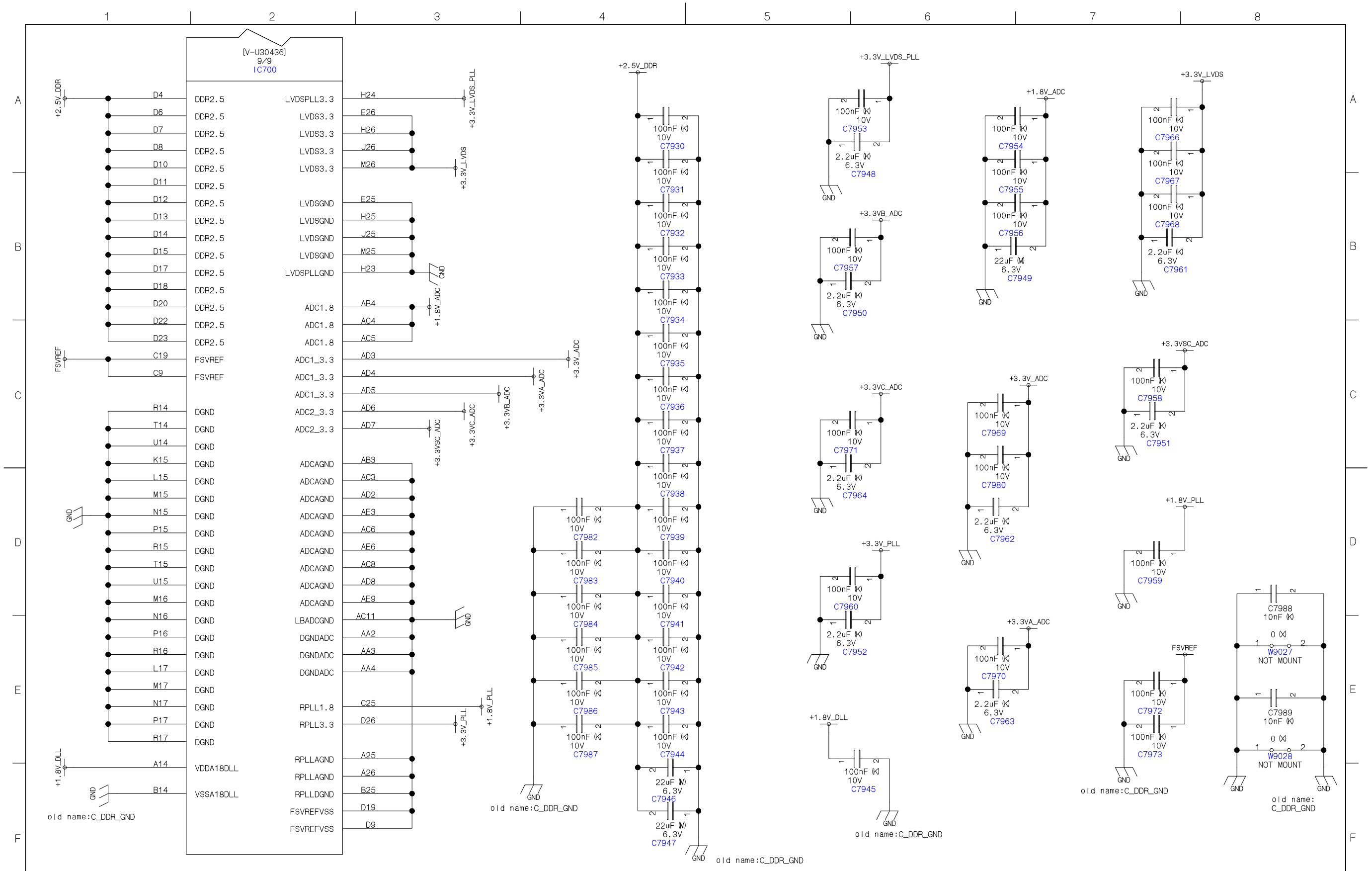

U04AS SIGNAL [700] CORTEZ POWER_1 (PE0422)

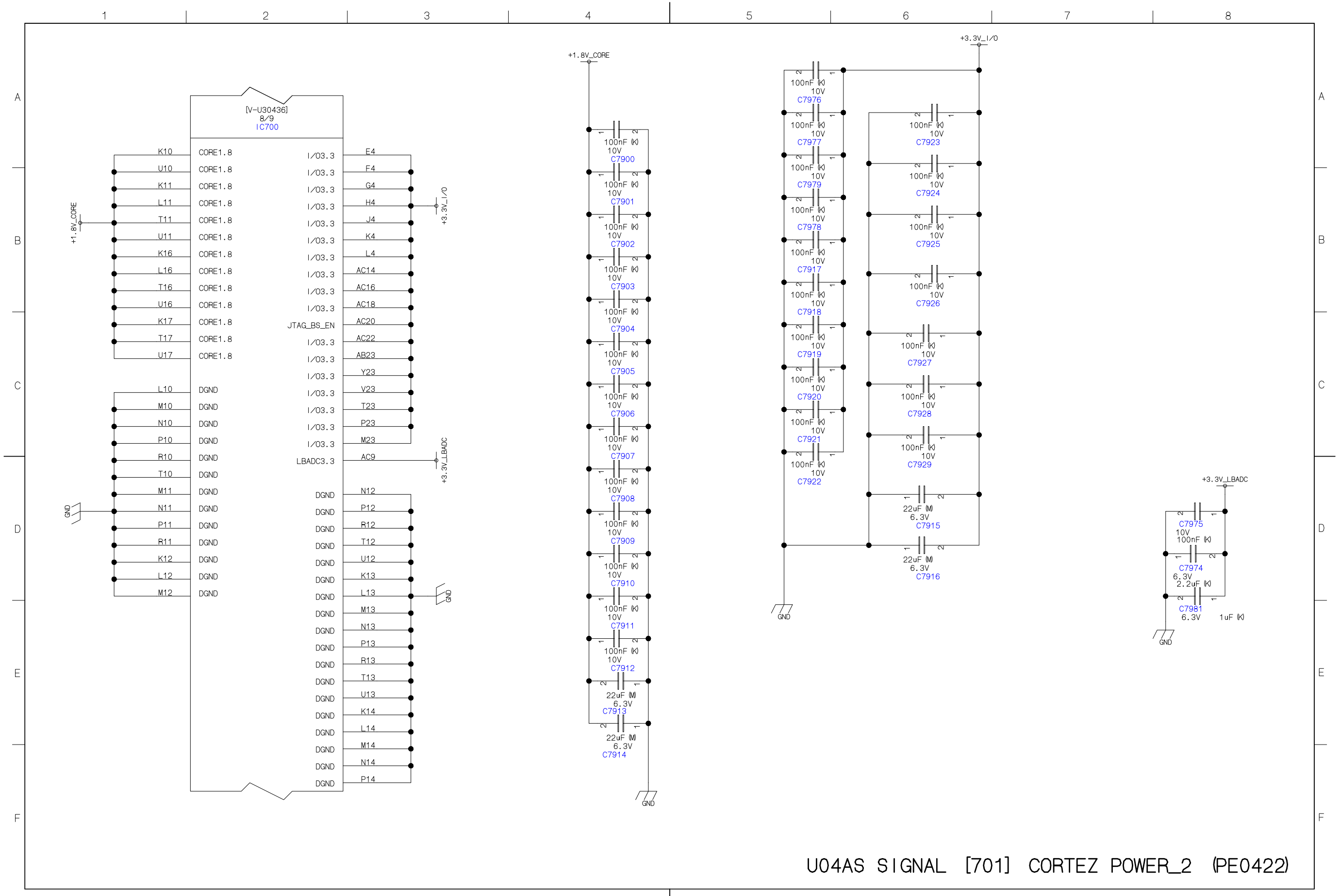

U04AS SIGNAL [701] CORTEZ POWER_2 (PE0422)

/FSCAS, /FSCS [0], /FSRAS, /FSWE, FSADDR [0-12], FSBKSEL [0-1], FSCKE, FSCLK+, FSCLK-, FSDATA [0-31], FSDQM [0-3], FSDQS [0-3]

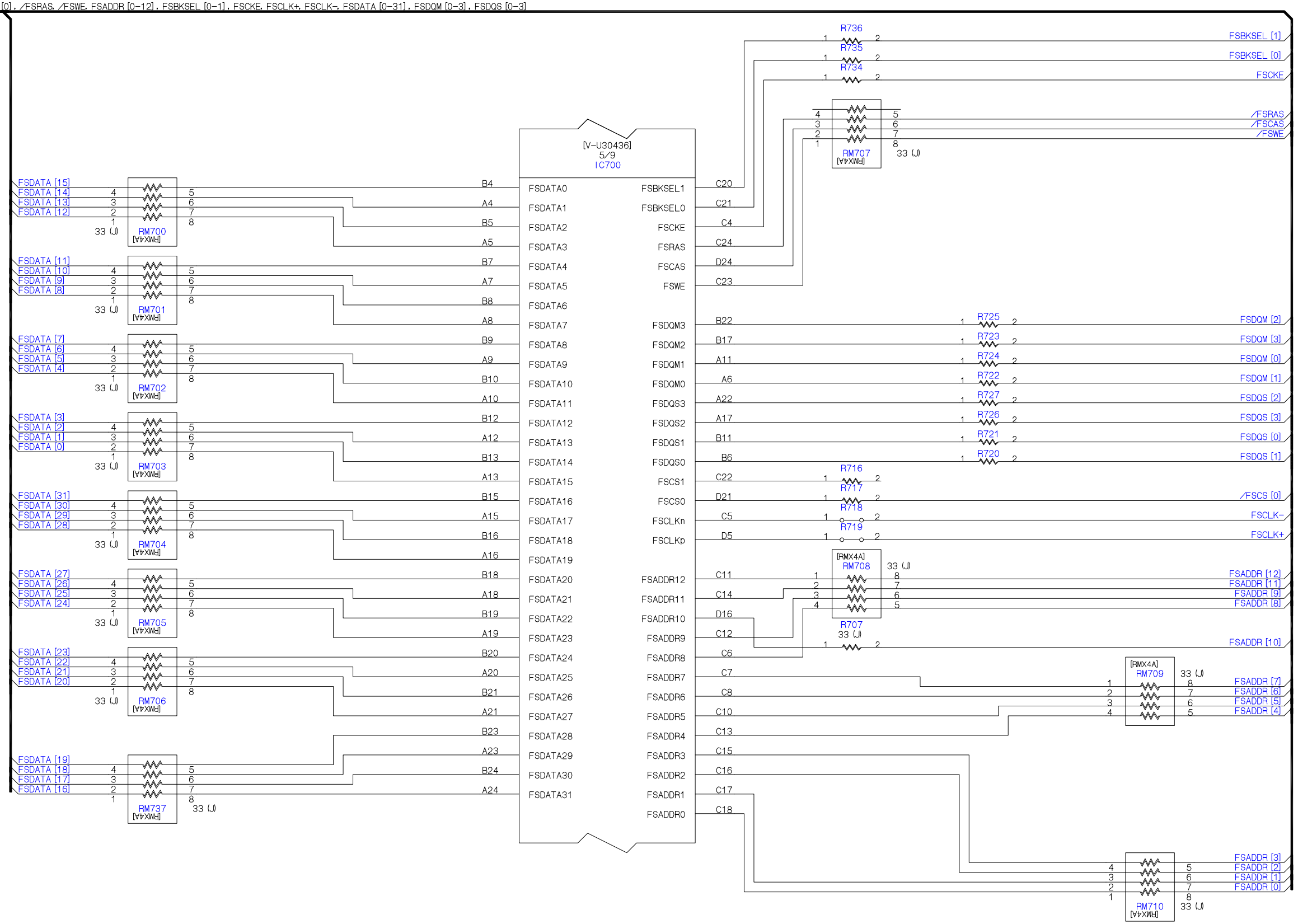

U04AS SIGNAL [702] CORTEZ DDR I/F (PE0422)

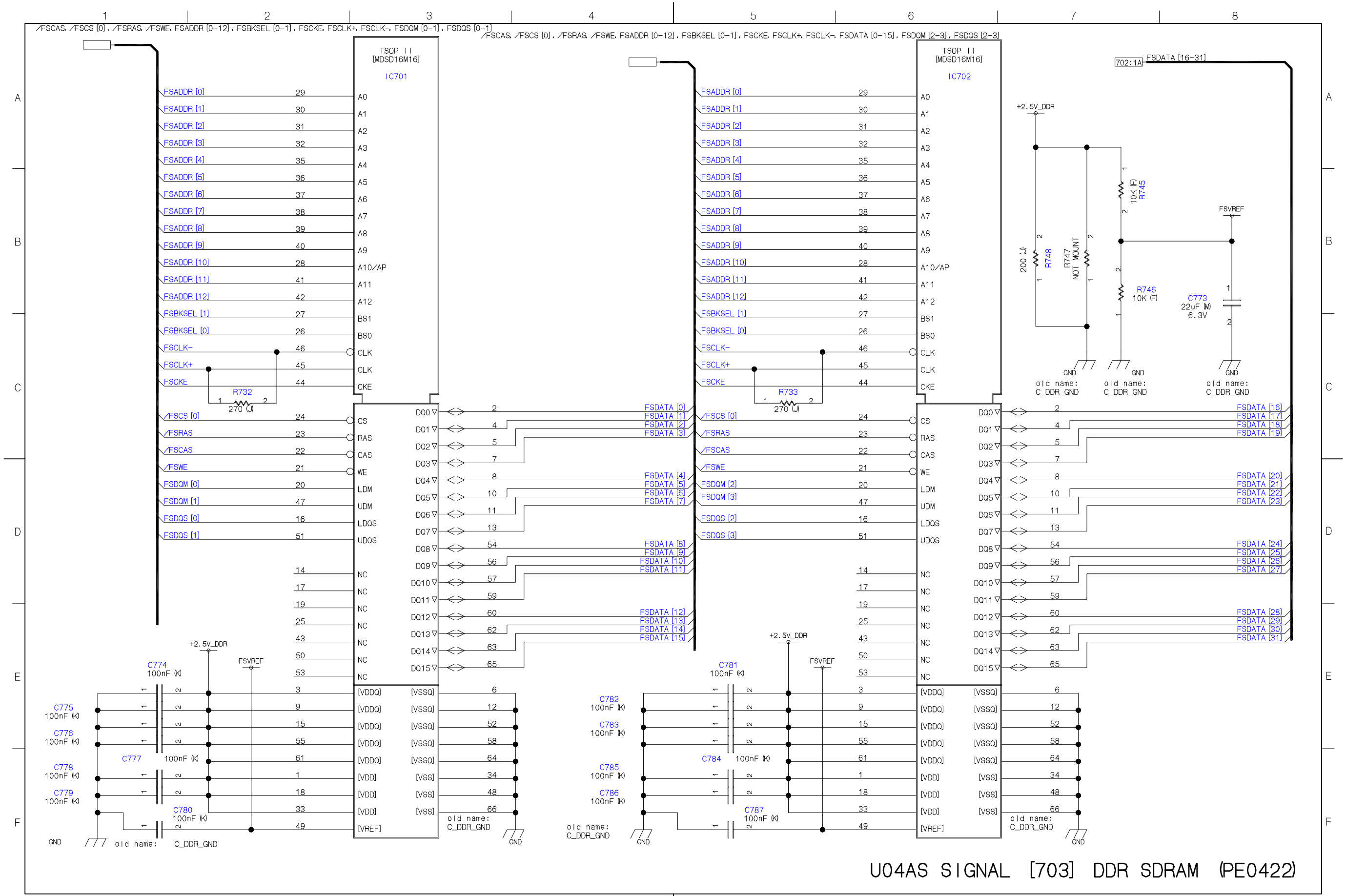

U04AS SIGNAL [703] DDR SDRAM (PE0422)

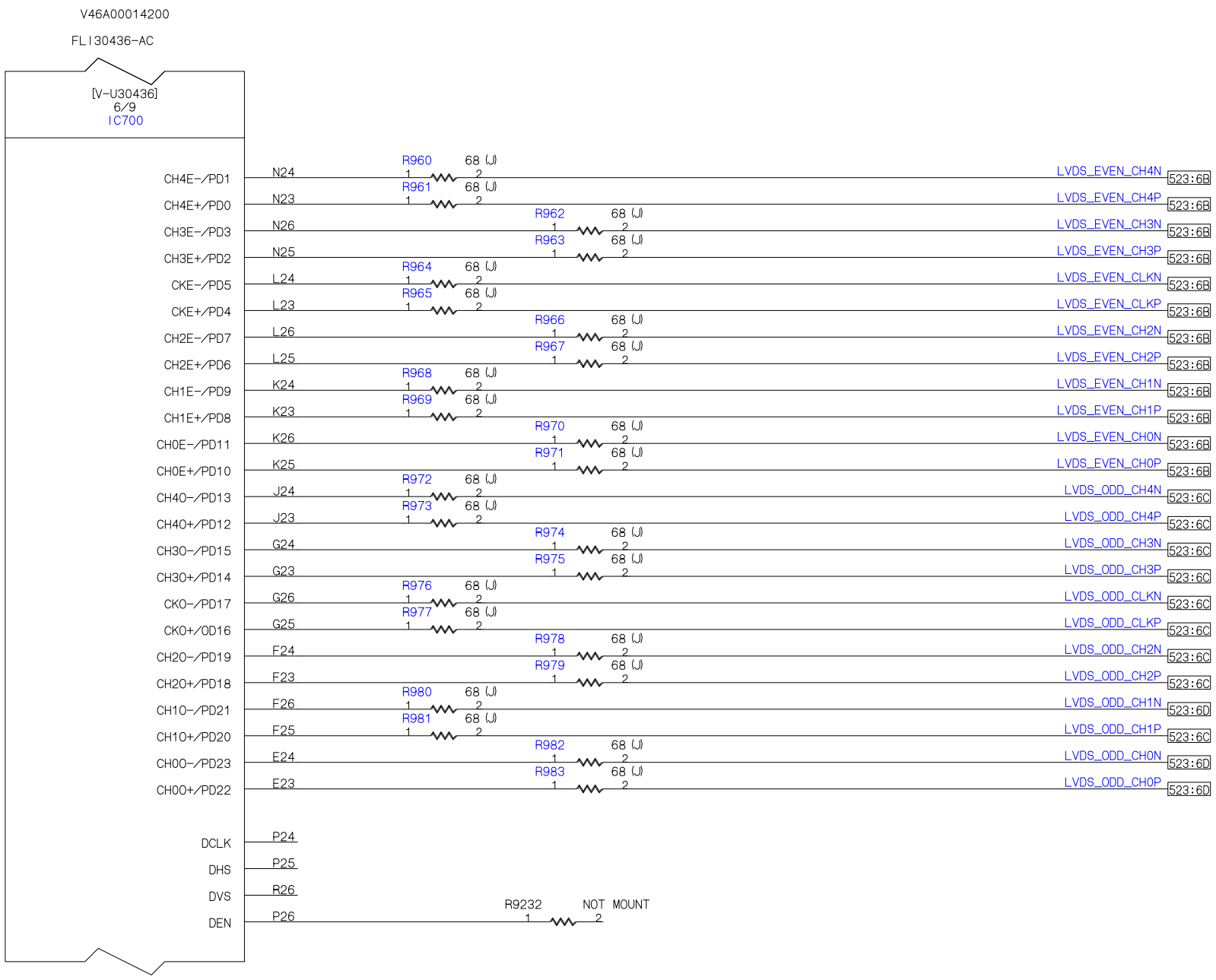

U04AS SIGNAL [900] CORTEZ LVDS_OUT (PE0422)

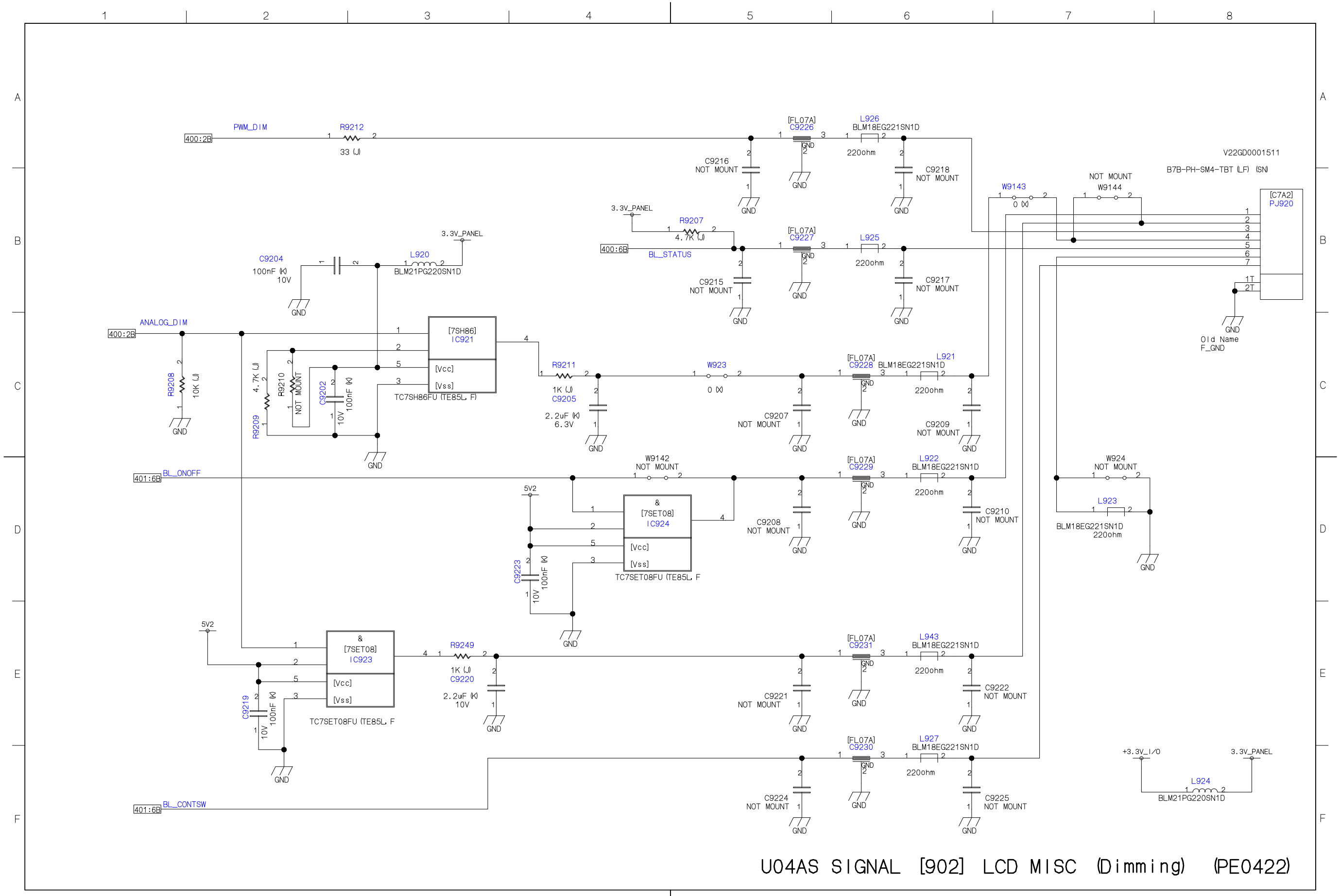

U04AS SIGNAL [902] LCD MISC (Dimming) (PE0422)

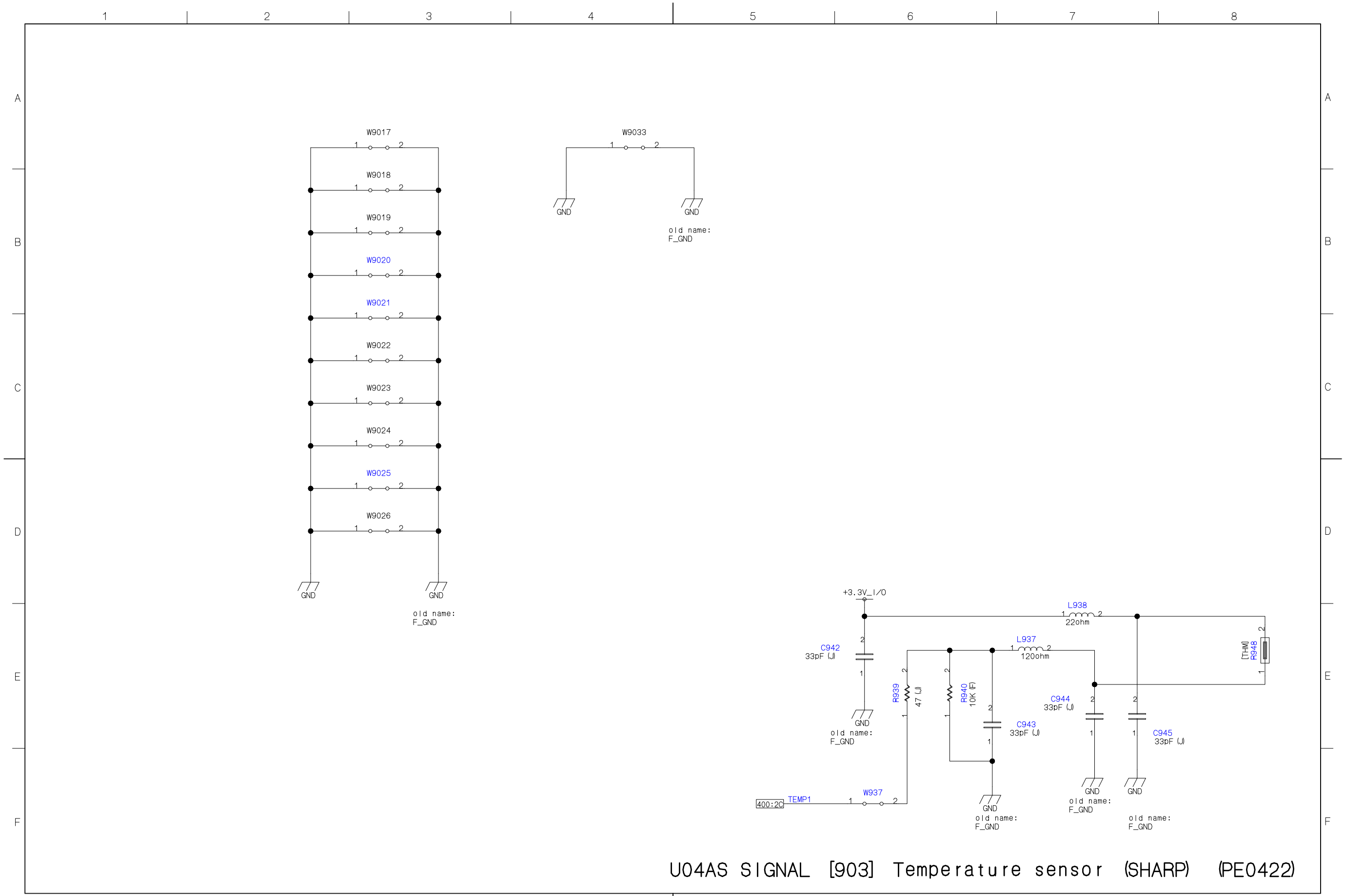

U04AS SIGNAL [903] Temperature sensor (SHARP) (PE0422)

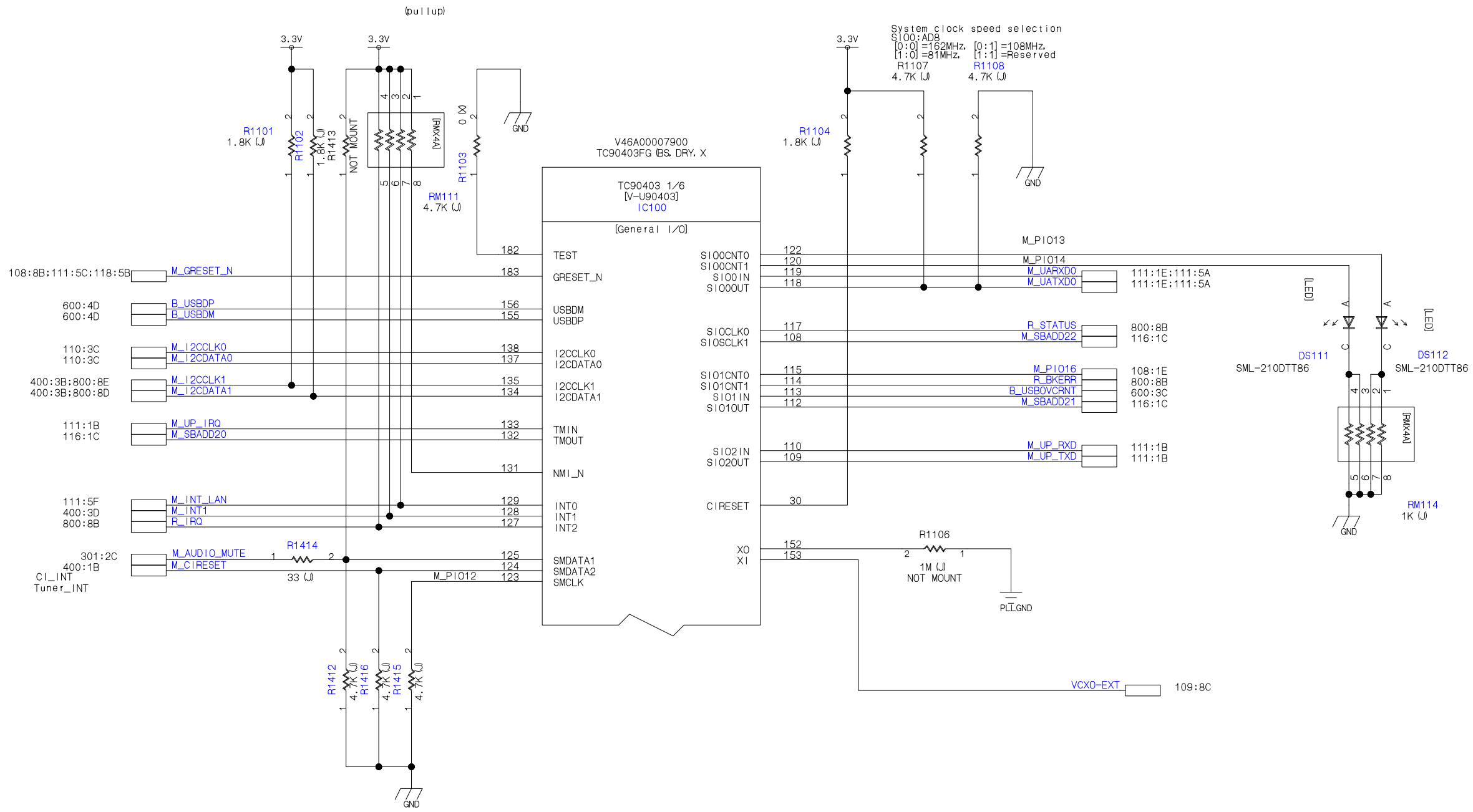

U05A DIGITAL [101] Donau SIO/I2C/RST etc (PE0284)

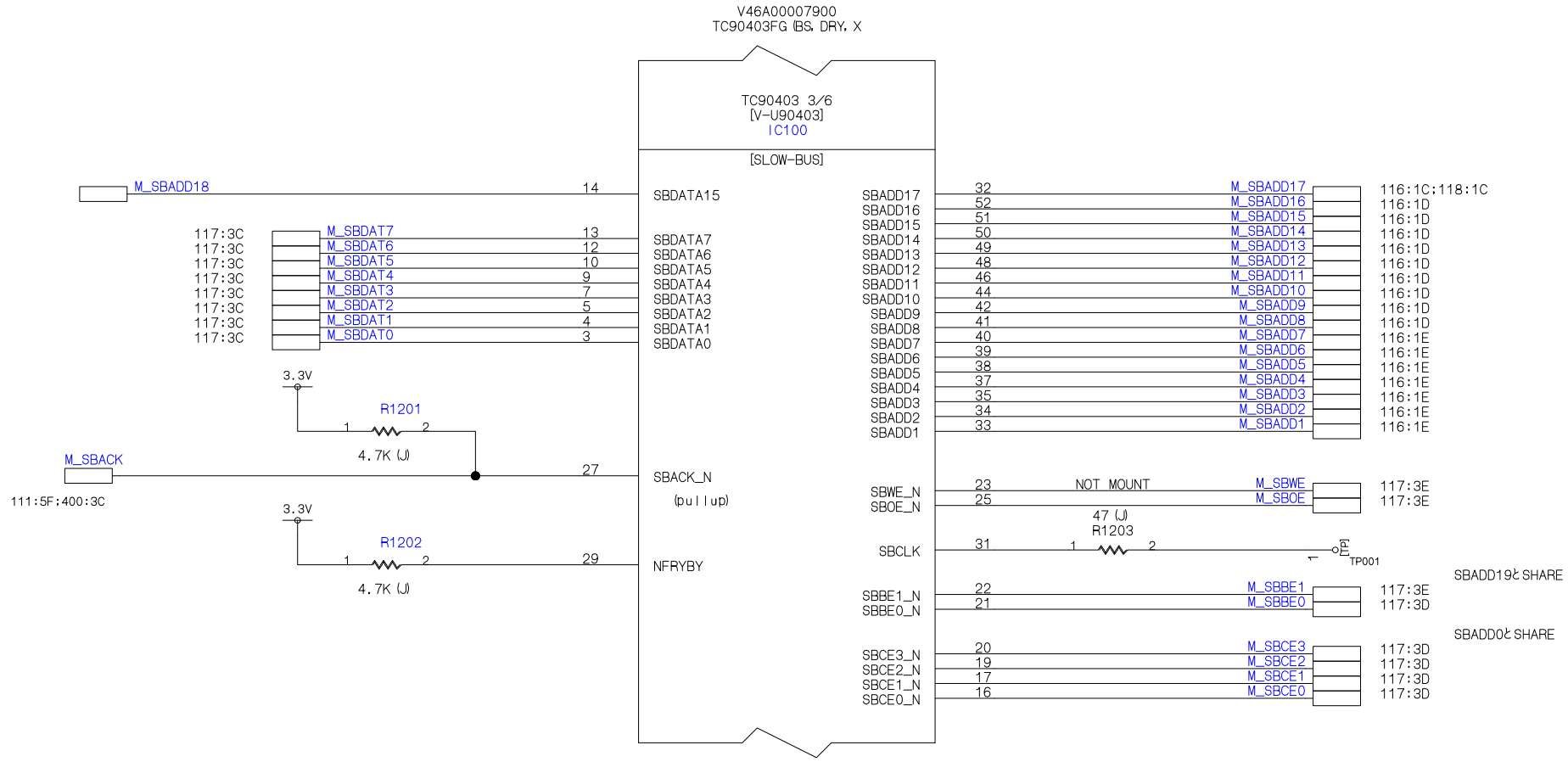
V46A00007900
TC90403FG (BS, DRY, X
TC90403 3/6
[V-U90403]
IC100
[SLOW-BUS]
M_SBADD18
14
SBDATA15
117:3C
M_SBDAT7
13
SBDATA7
M_SBDAT6
12
SBDATA6
M_SBDAT5
10
SBDATA5
M_SBDAT4
9
SBDATA4
M_SBDAT3
7
SBDATA3
M_SBDAT2
5
SBDATA2
M_SBDAT1
4
SBDATA1
M_SBDAT0
3
SBDATA0
3.3V
R1201
4.7K (J)
M_SBACK
27
SBACK_N
(pull up)
111:5F:400:3C
3.3V
R1202
4.7K (J)
29
NFRYBY
SBADD17
32
M_SBADD17
116:1C:118:1C
SBADD16
52
M_SBADD16
116:1D
SBADD15
51
M_SBADD15
116:1D
SBADD14
50
M_SBADD14
116:1D
SBADD13
49
M_SBADD13
116:1D
SBADD12
48
M_SBADD12
116:1D
SBADD11
46
M_SBADD11
116:1D
SBADD10
44
M_SBADD10
116:1D
SBADD9
42
M_SBADD9
116:1D
SBADD8
41
M_SBADD8
116:1D
SBADD7
40
M_SBADD7
116:1E
SBADD6
39
M_SBADD6
116:1E
SBADD5
38
M_SBADD5
116:1E
SBADD4
37
M_SBADD4
116:1E
SBADD3
35
M_SBADD3
116:1E
SBADD2
34
M_SBADD2
116:1E
SBADD1
33
M_SBADD1
116:1E
SBWE_N
23
NOT MOUNT
M_SBWE
117:3E
SBOE_N
25
M_SBOE
117:3E
47 (J)
R1203
SBCLK
31
TP001
SBADD19と SHARE
SBBE1_N
22
M_SBBE1
117:3E
SBBE0_N
21
M_SBBE0
117:3D
SBADD0と SHARE
SBCE3_N
20
M_SBCE3
117:3D
SBCE2_N
19
M_SBCE2
117:3D
SBCE1_N
17
M_SBCE1
117:3D
SBCE0_N
16
M_SBCE0
117:3D

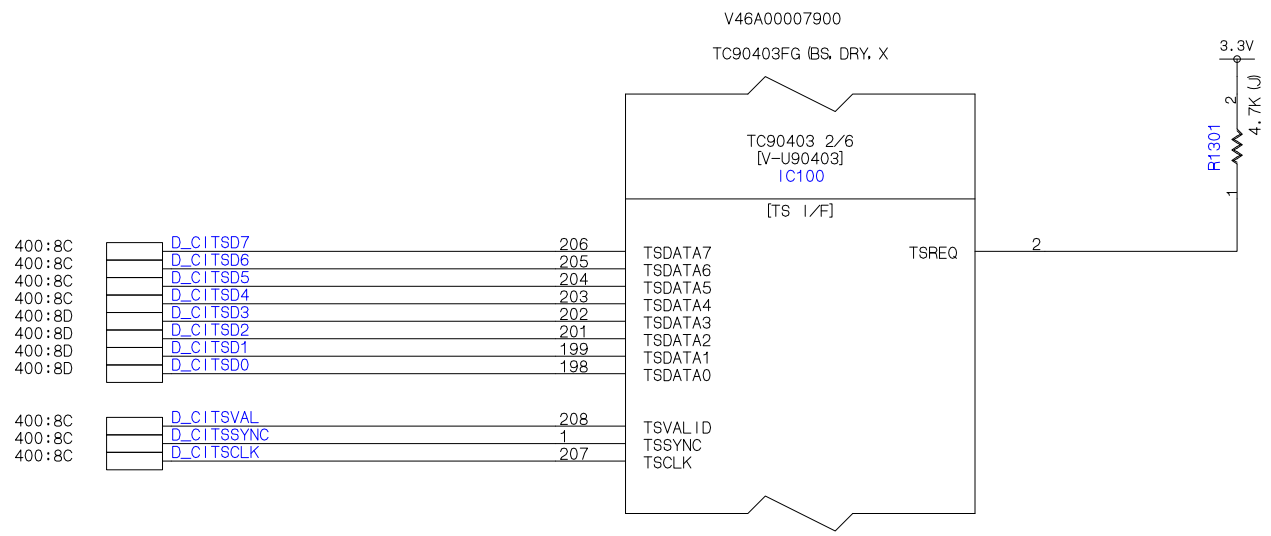

U05A DIGITAL [103] TS (PE0284)

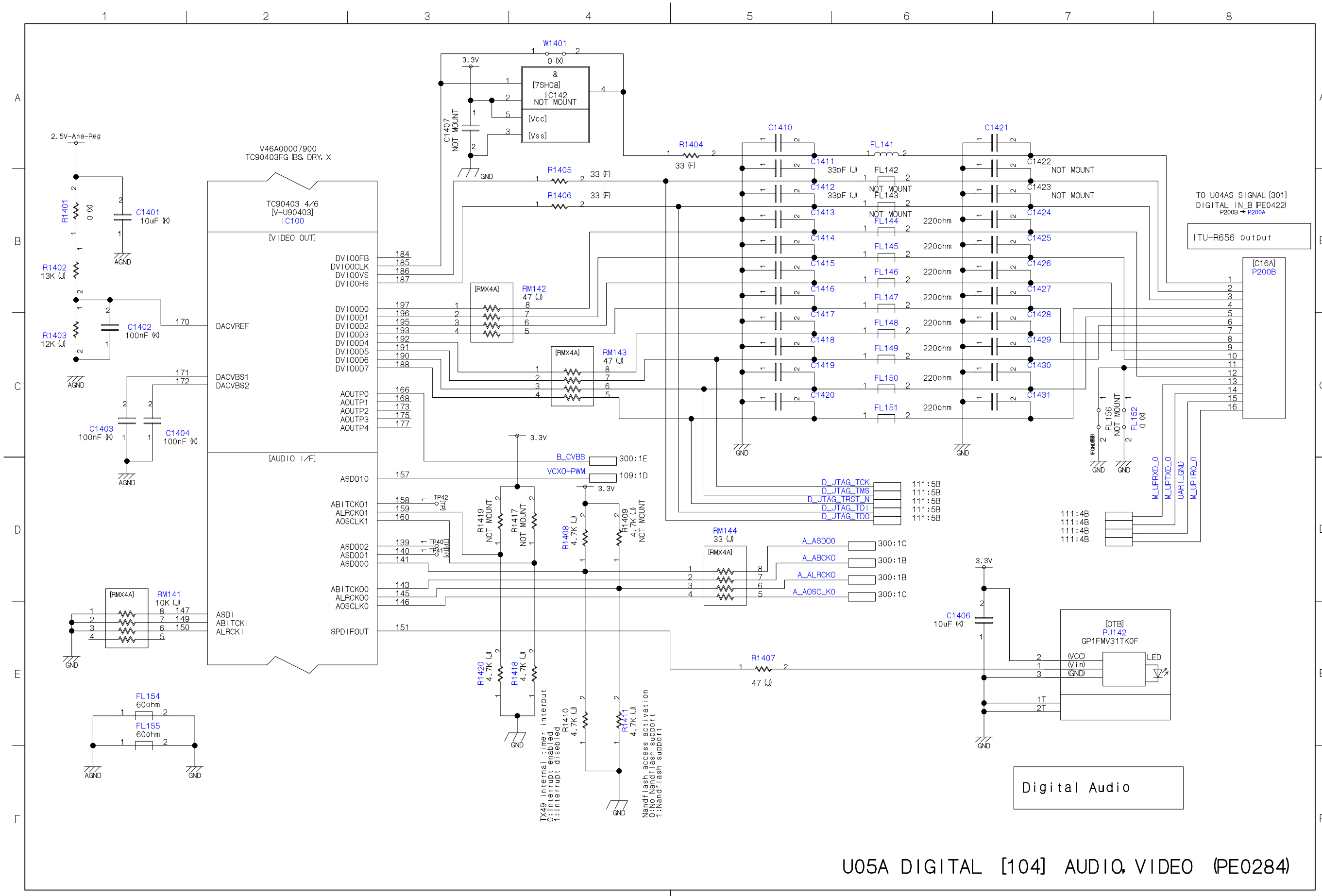

U05A DIGITAL [104] AUDIO, VIDEO (PE0284)

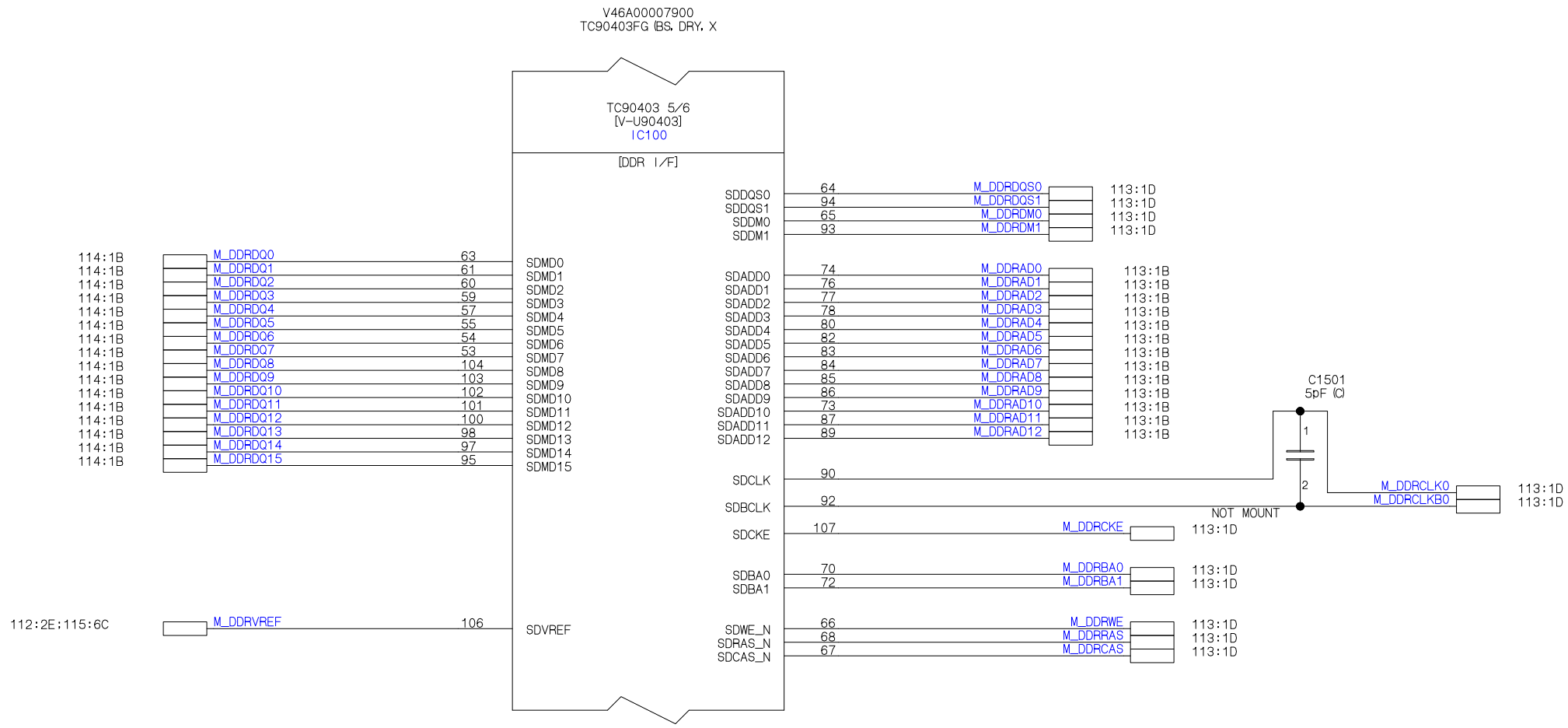

U05A DIGITAL [105] DDRSDRAM I/F (PE0284)

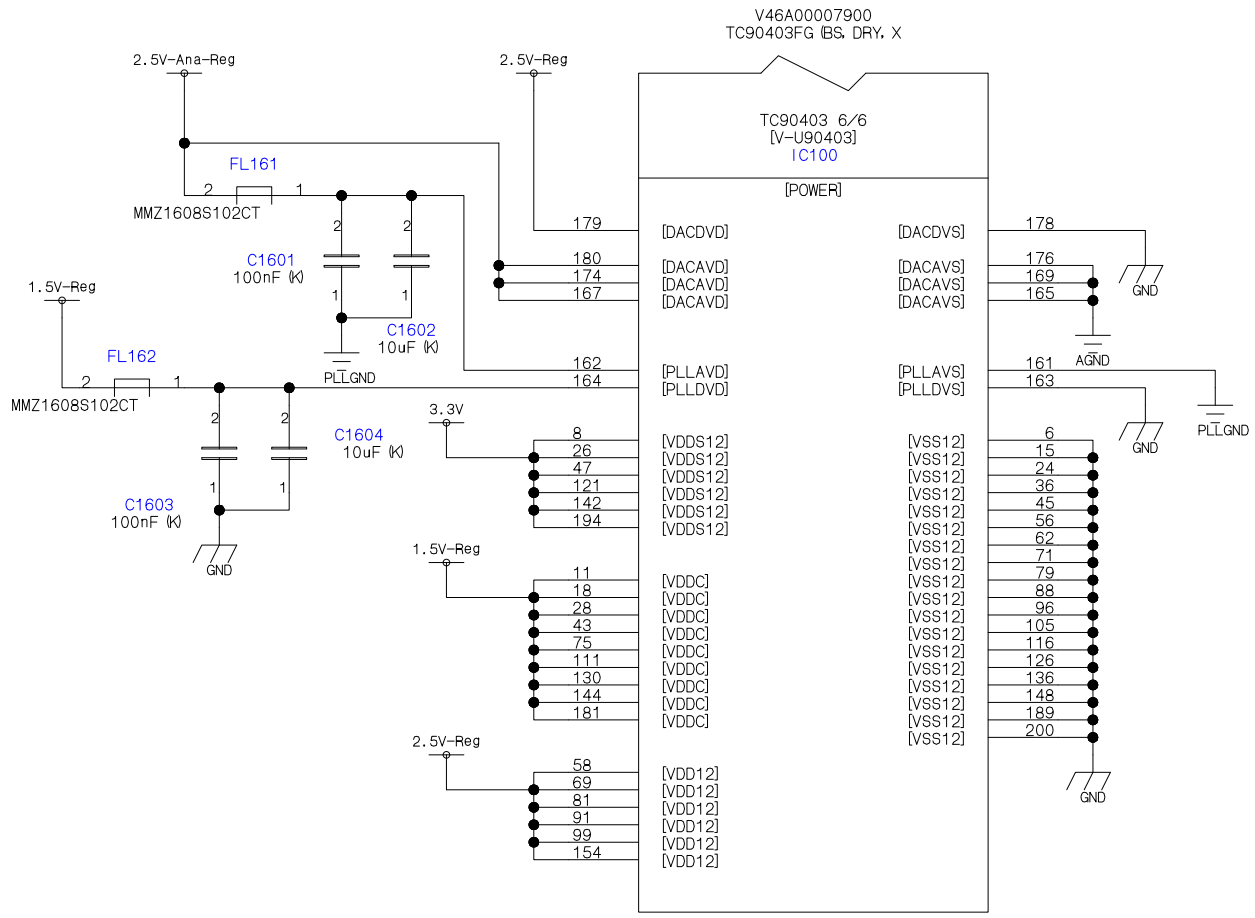

U05A DIGITAL [106] Donau PWR1 (PE0284)

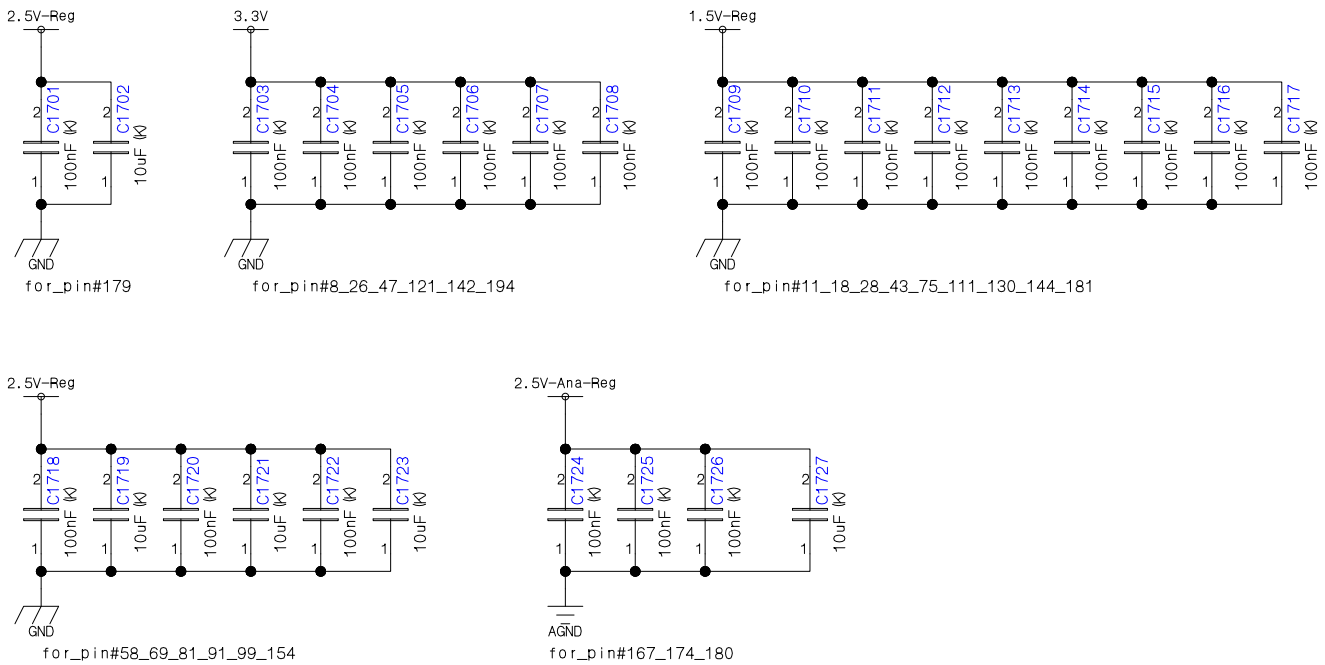

U05A DIGITAL [107] Donau PATHCON (PE0284)

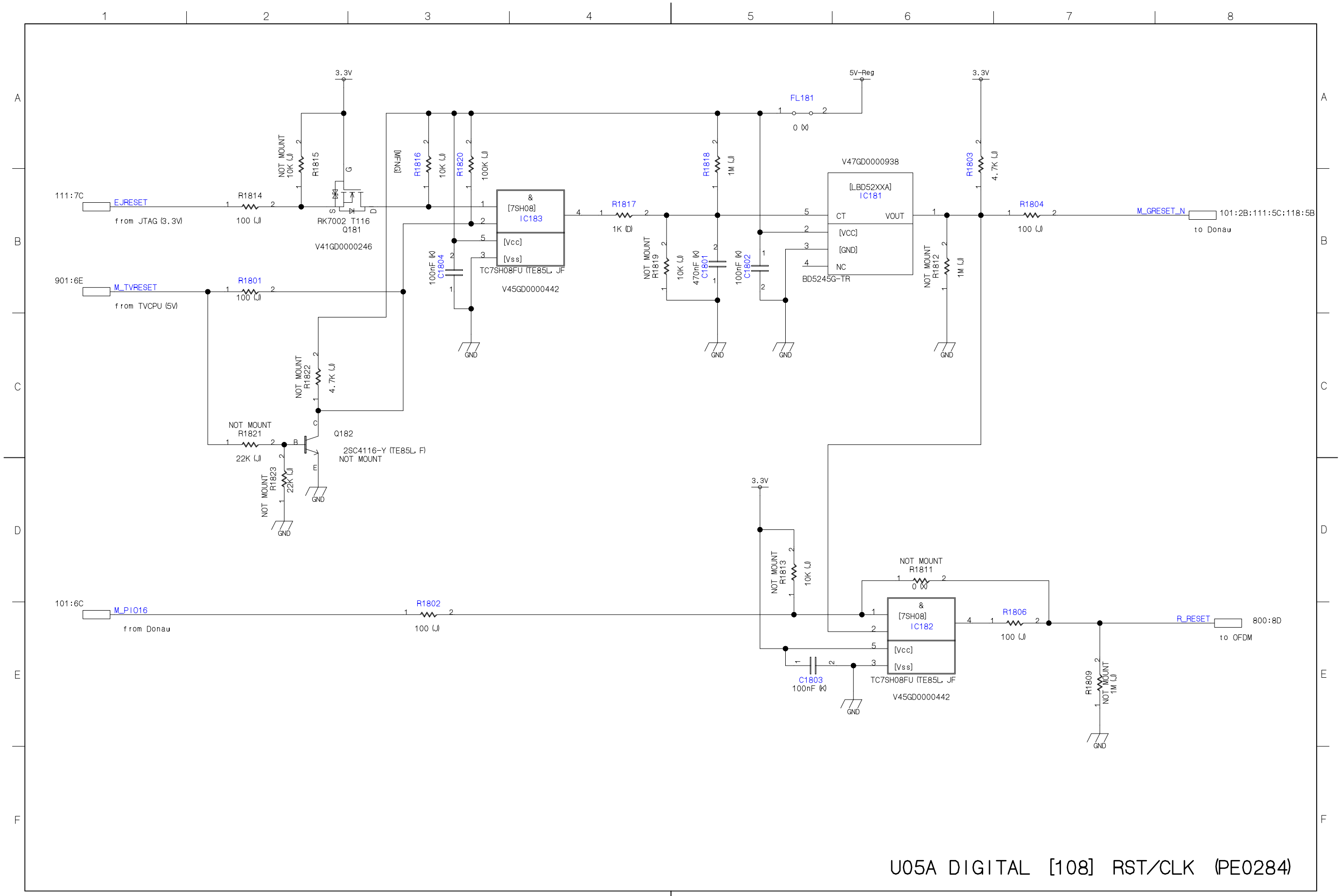

U05A DIGITAL [108] RST/CLK (PE0284)

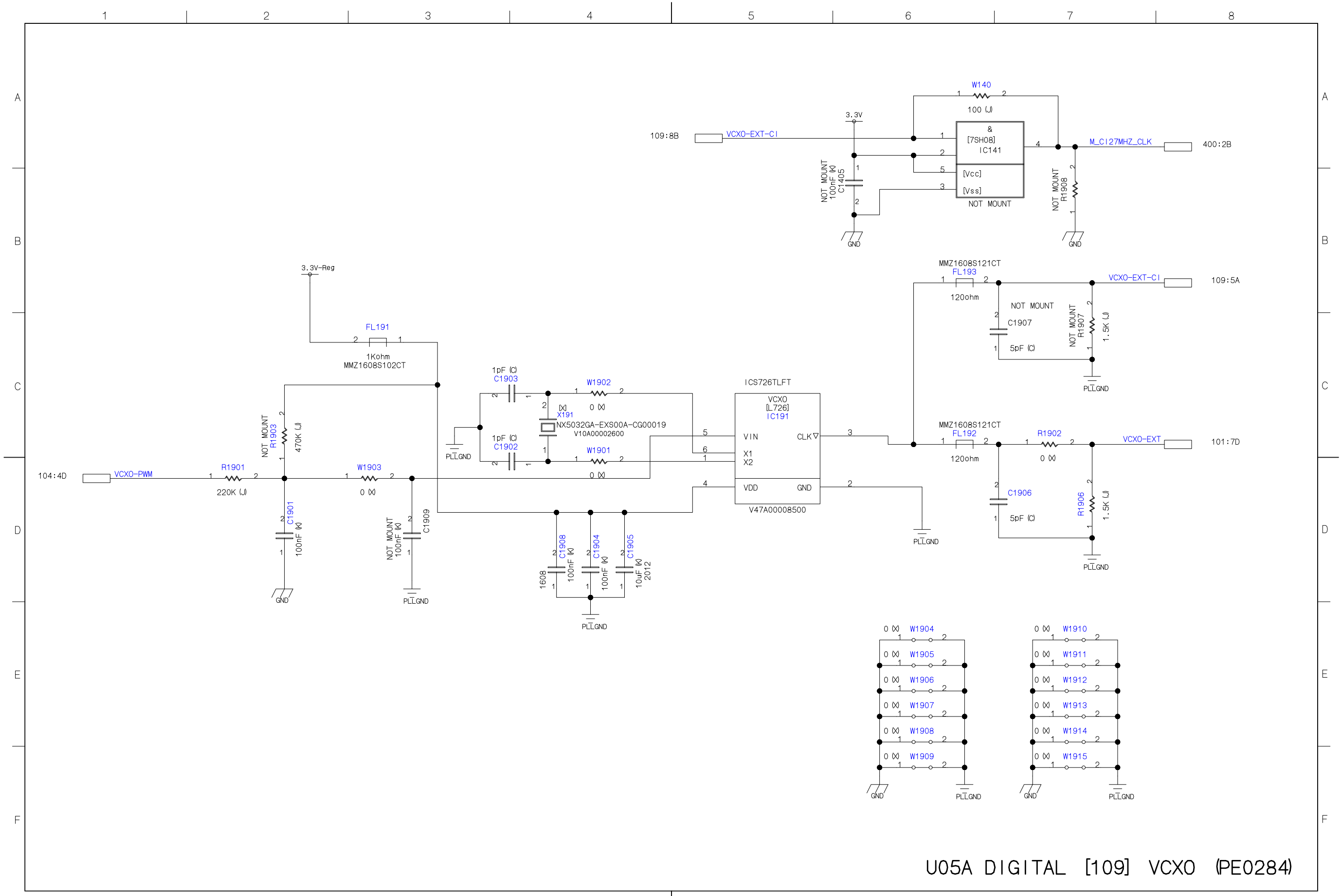

U05A DIGITAL [109] VCXO (PE0284)

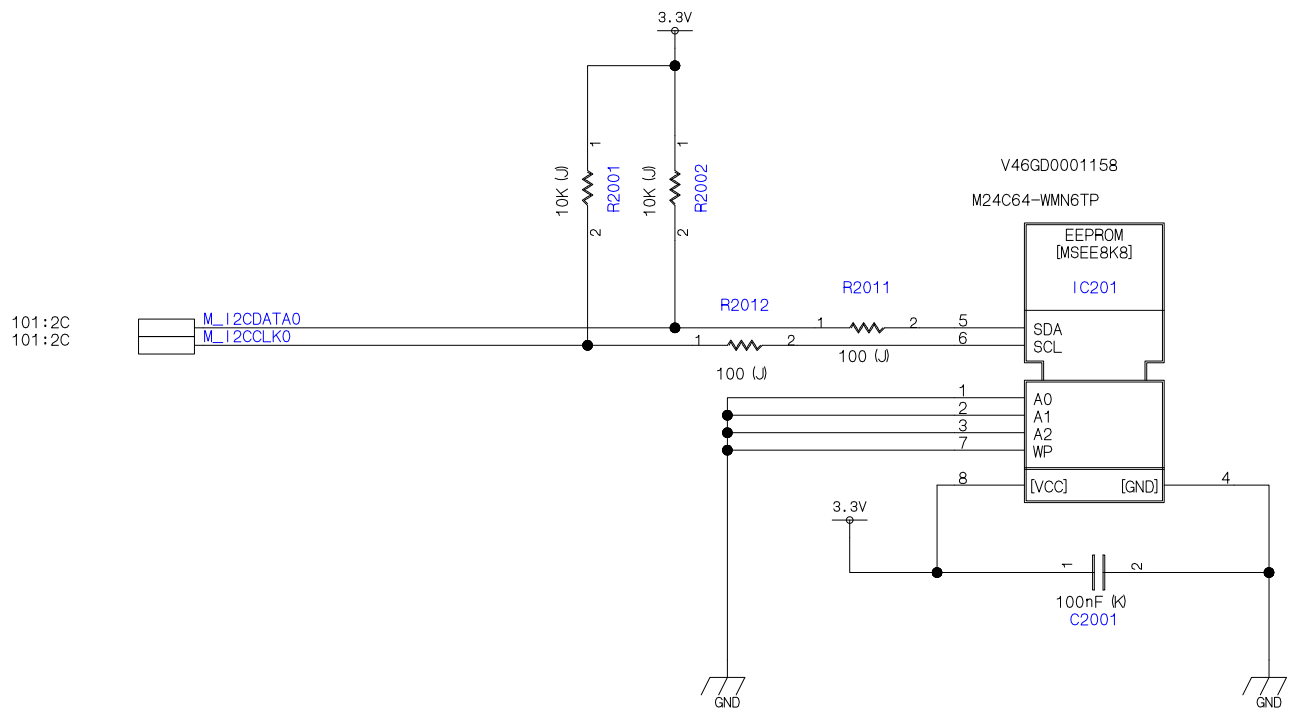

U05A DIGITAL [110] E2PROM (PE0284)

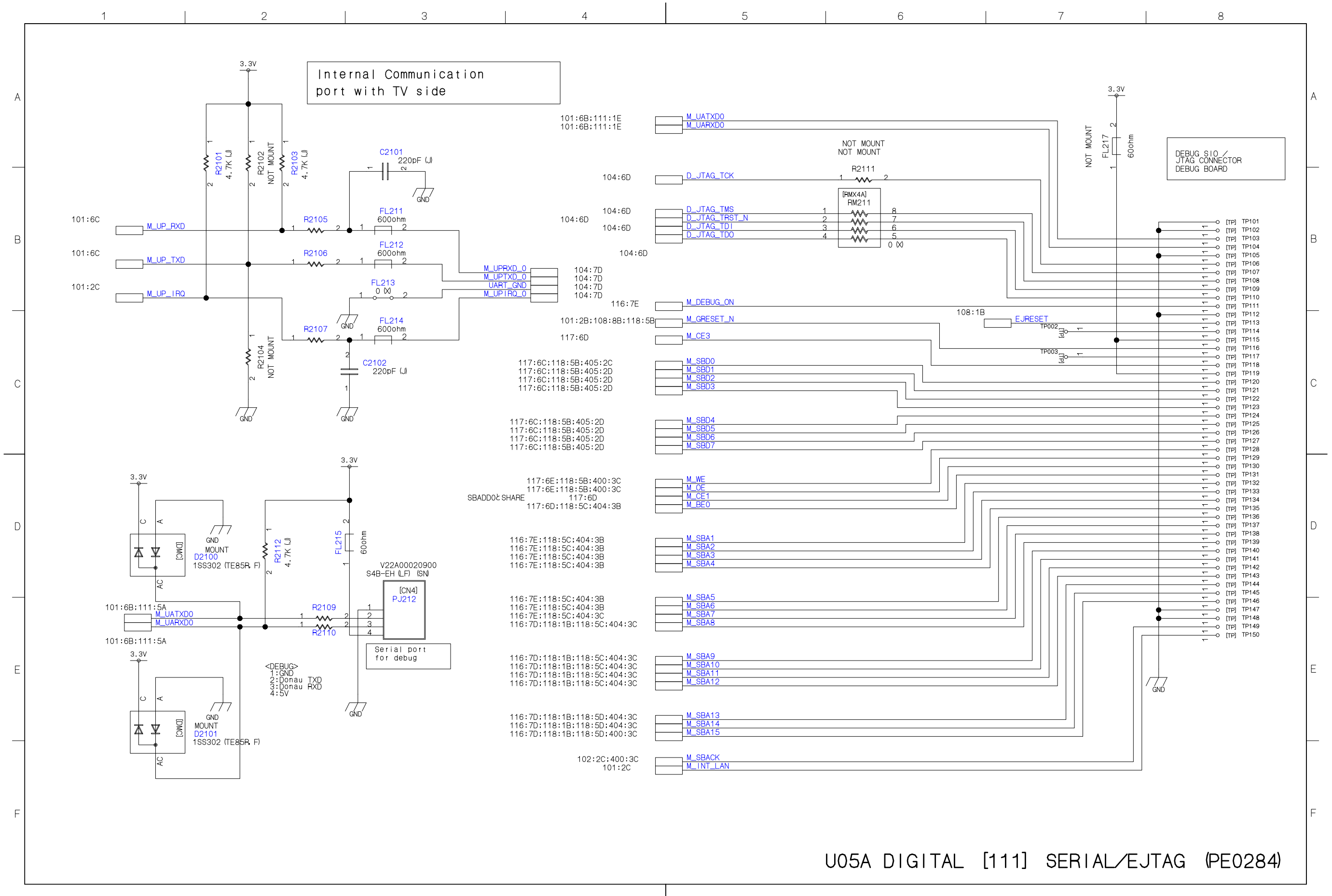

U05A DIGITAL [111] SERIAL/EJTAG (PE0284)

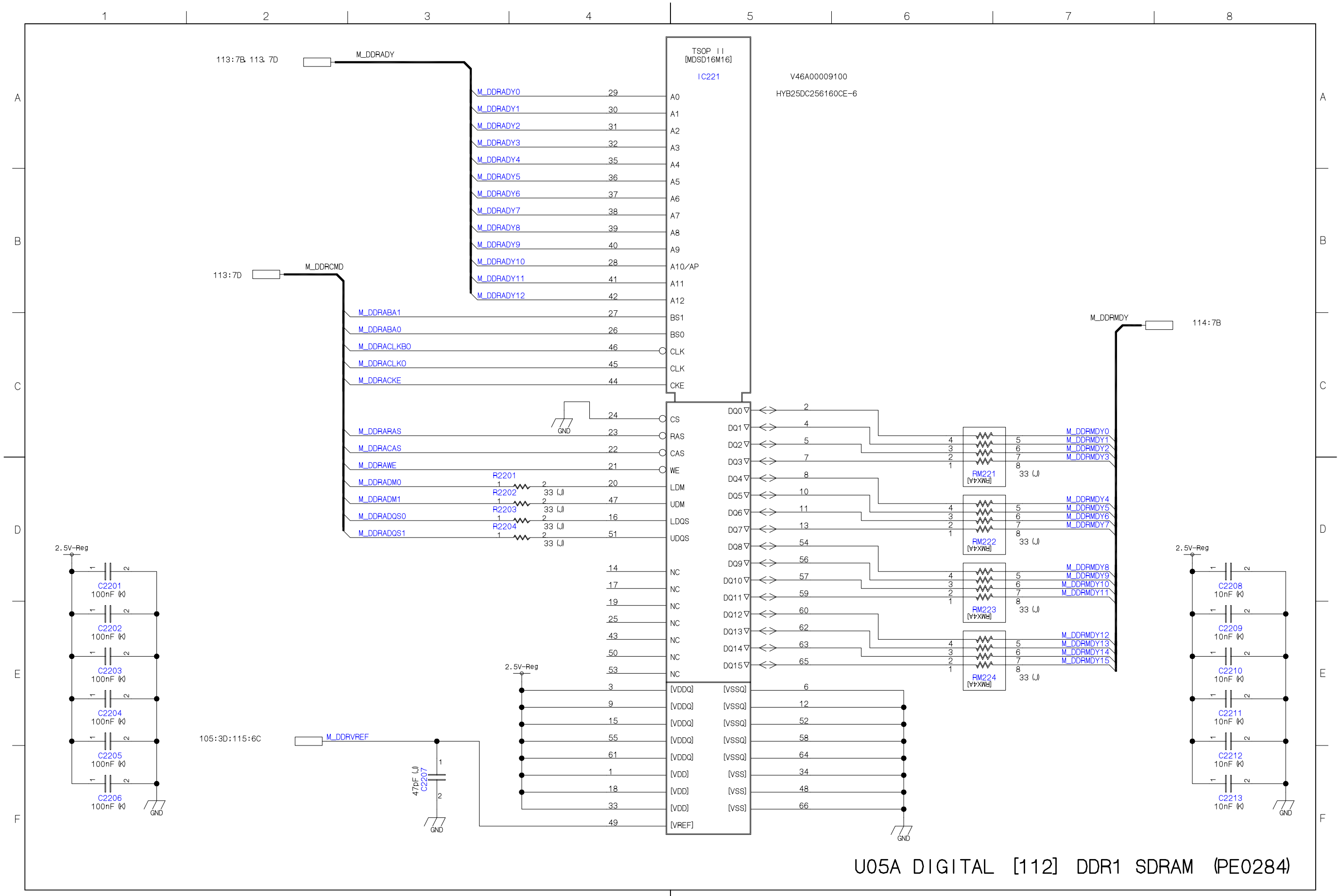

U05A DIGITAL [112] DDR1 SDRAM (PE0284)

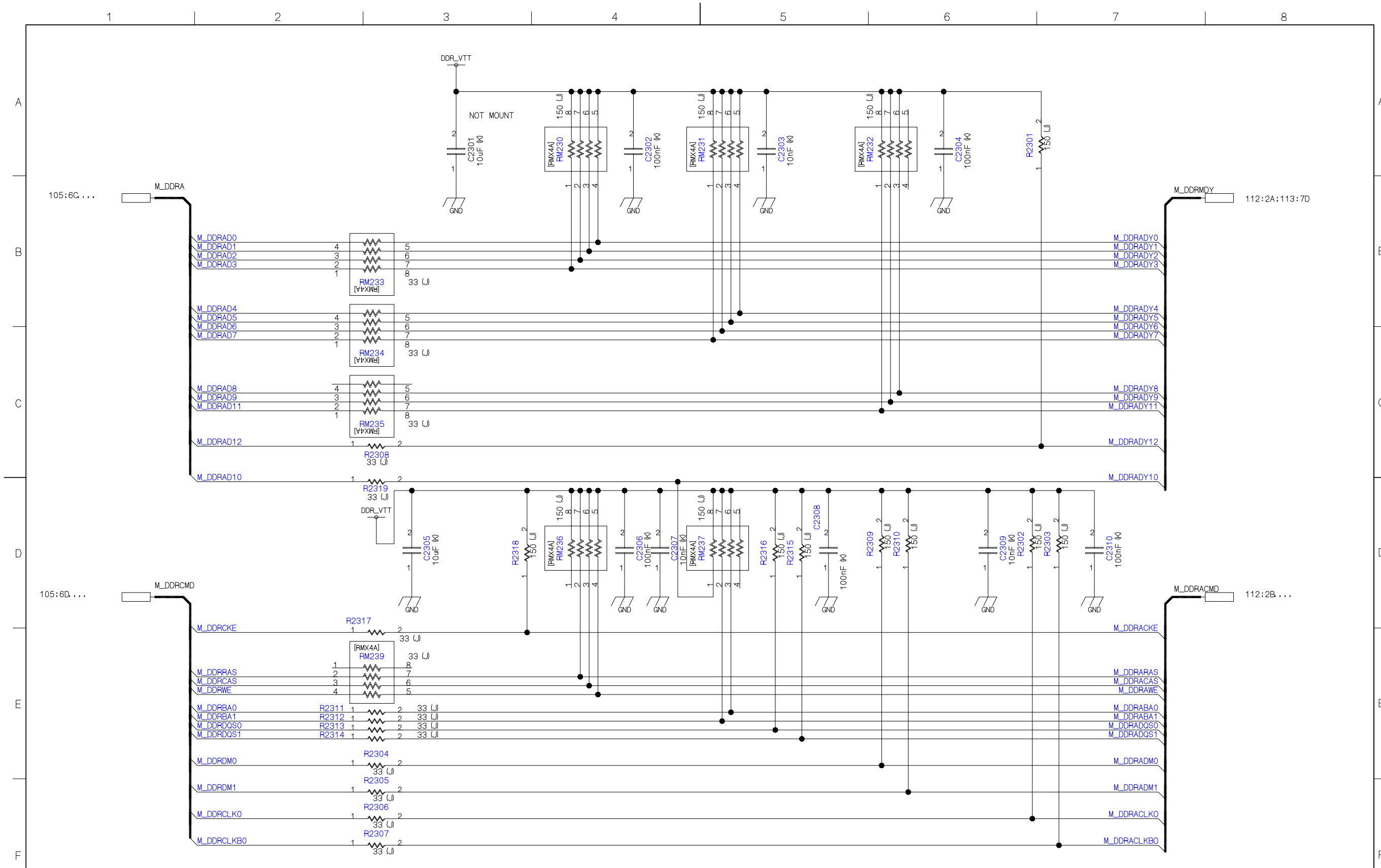

U05A DIGITAL [113] TERMINATE (PE0284)

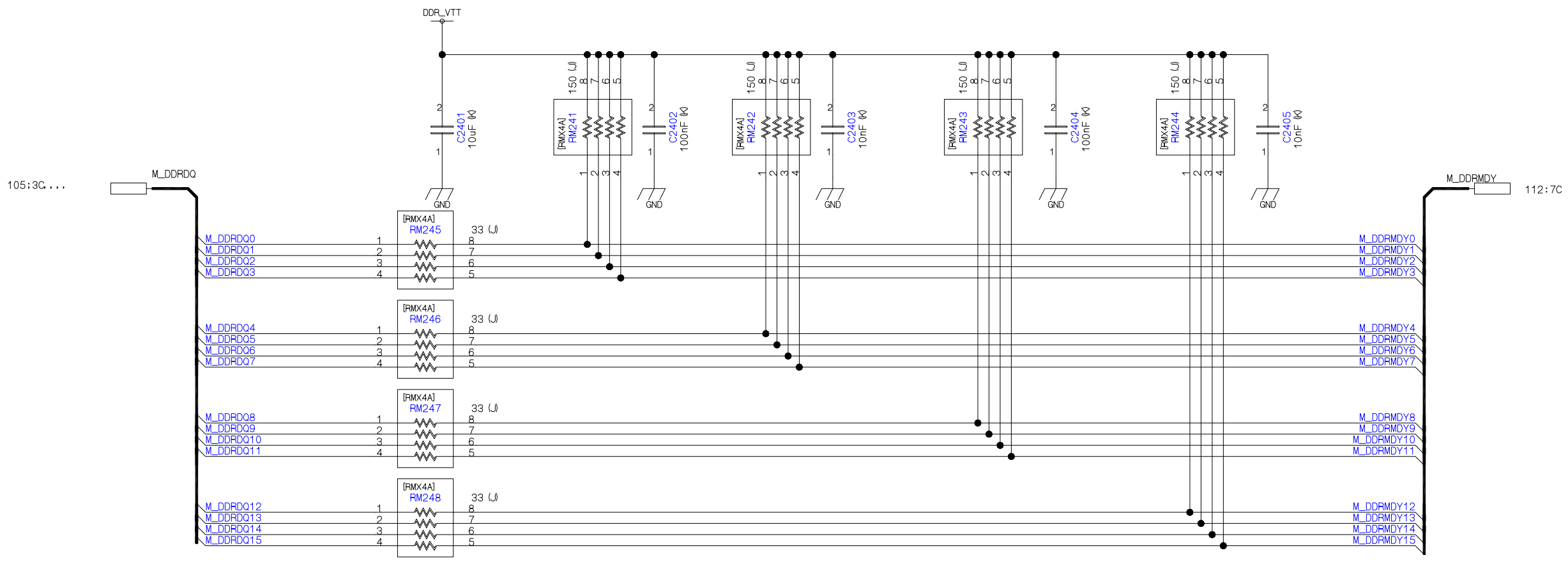

U05A DIGITAL [114] TERMINATE (PE0284)

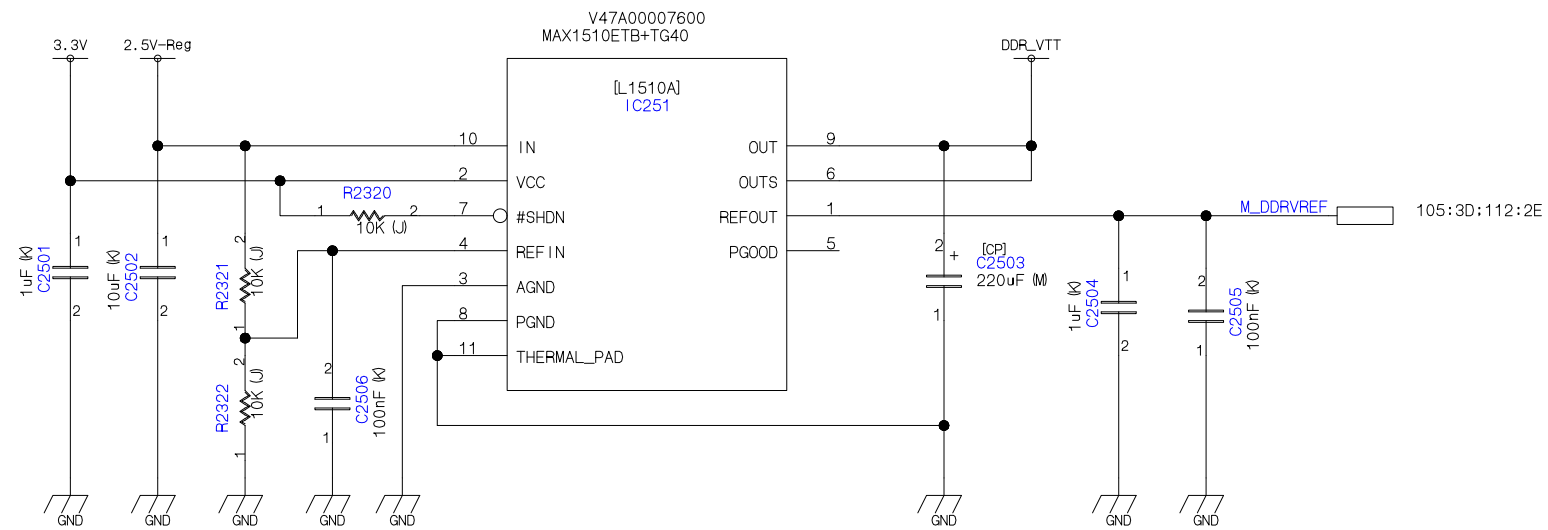

U05A DIGITAL [115] TERMINATE (PE0284)

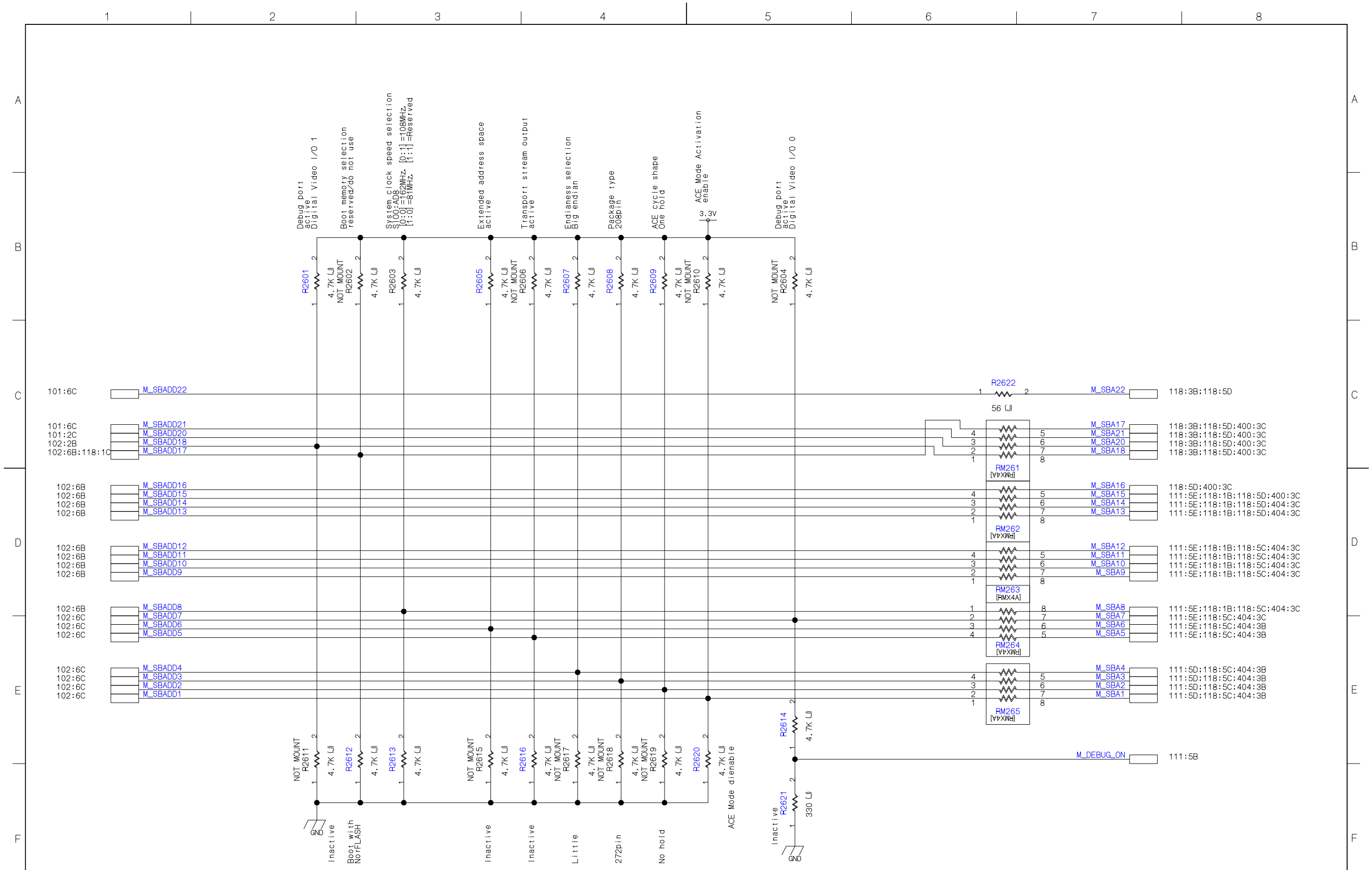

U05A DIGITAL [116] PIN CONFIG (PE0284)

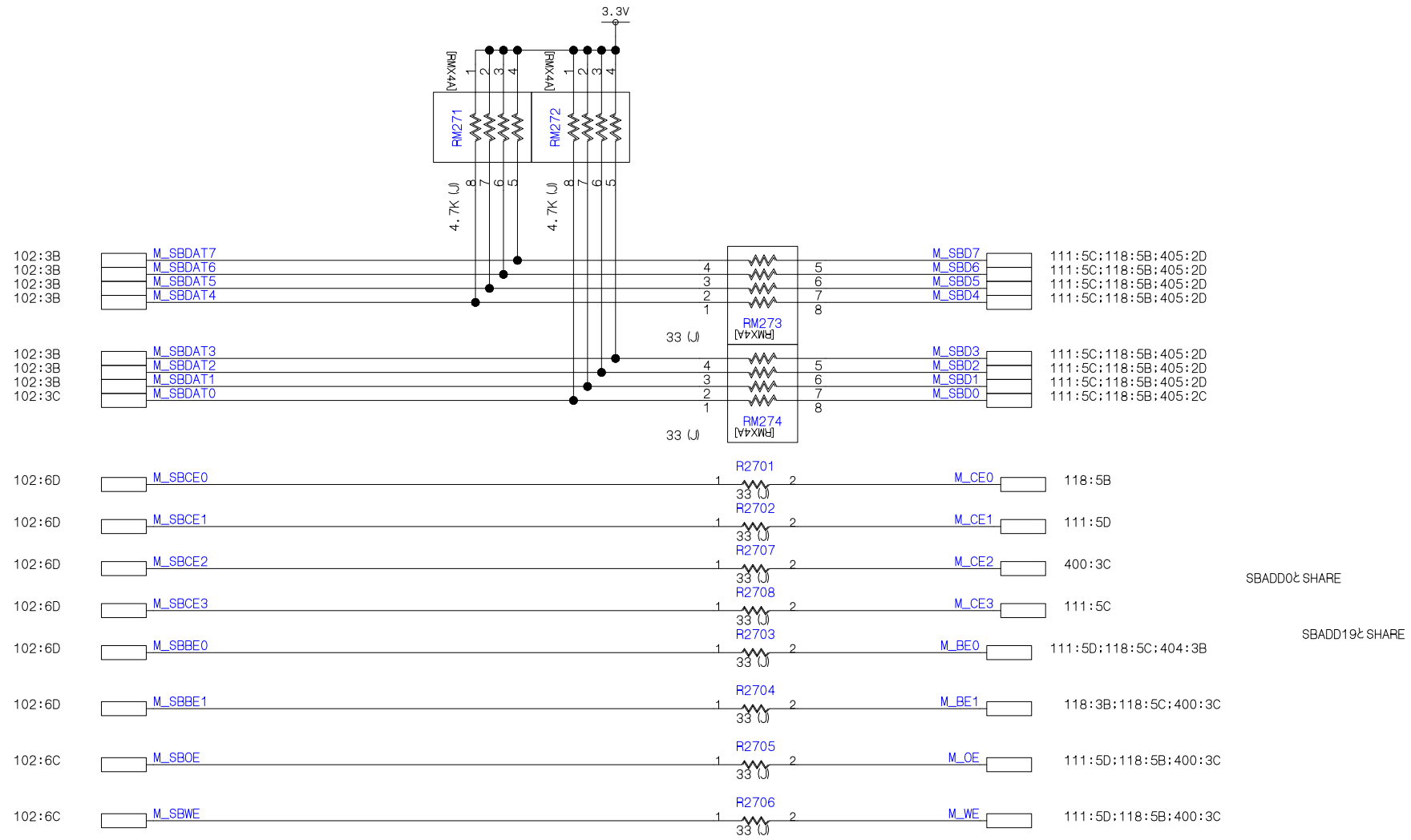

U05A DIGITAL [117] SBD REGISTER (PE0284)

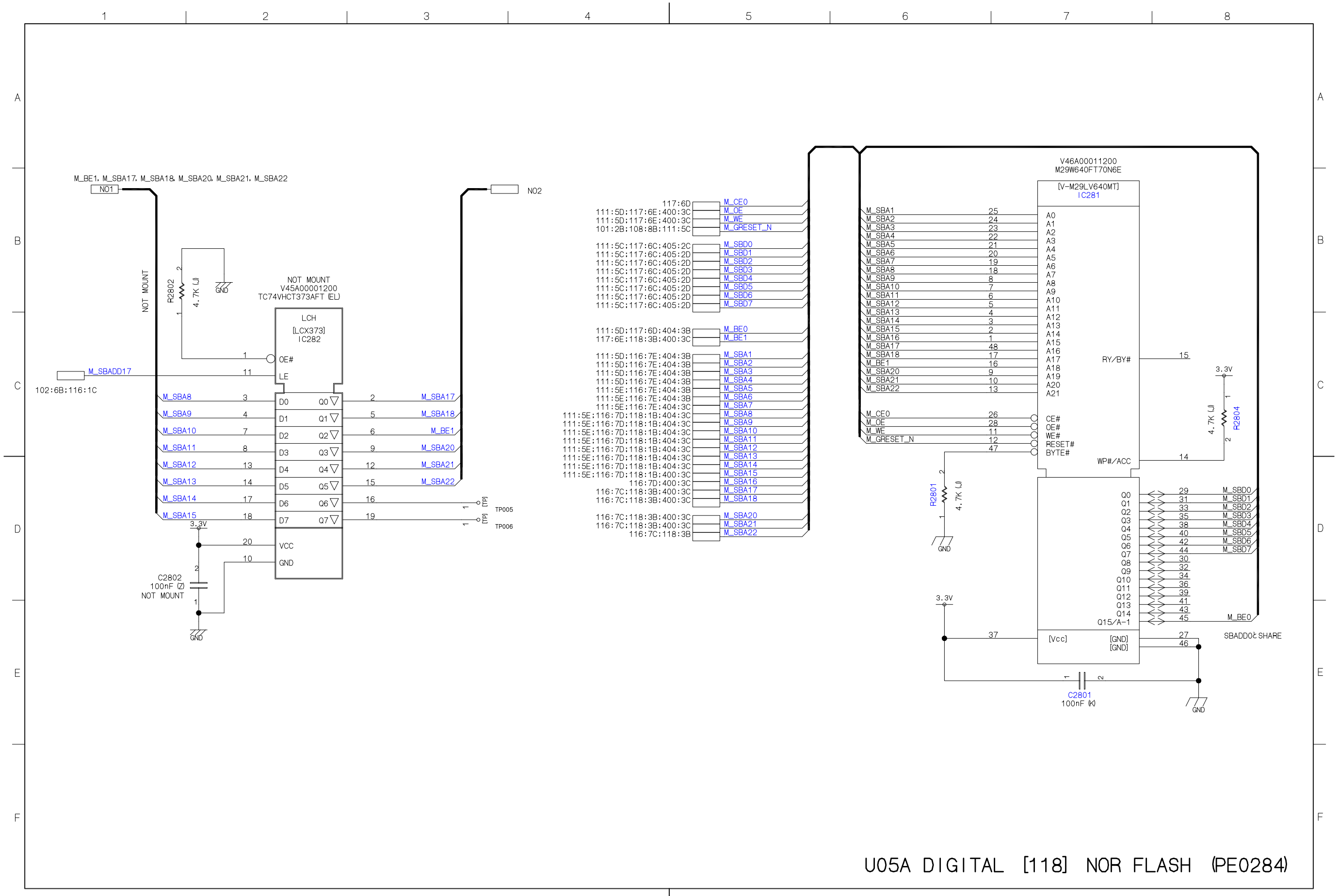

U05A DIGITAL [118] NOR FLASH (PE0284)

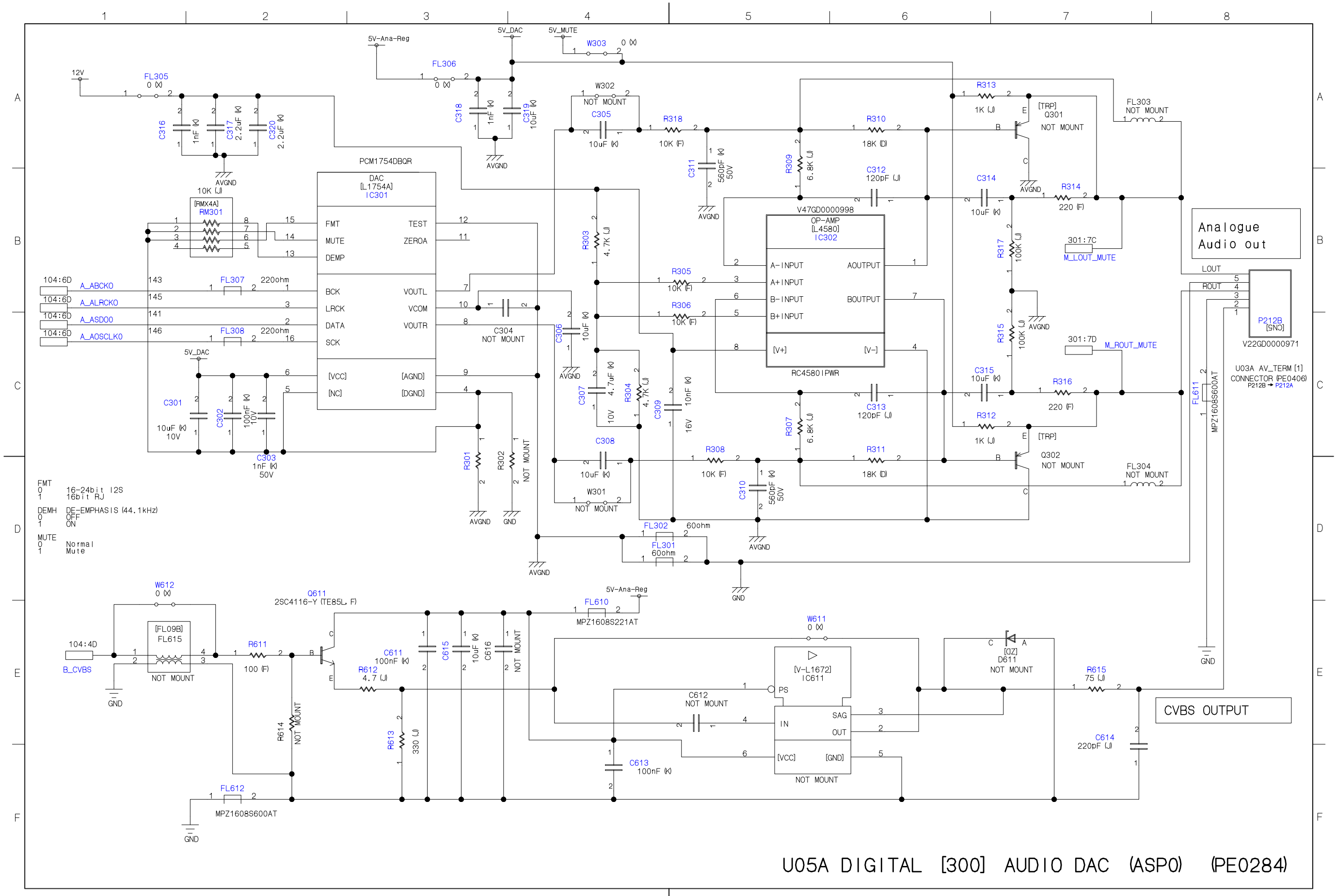
PCM1754DBQR
DAC [L1754A] IC301
FMT
MUTE
DEMP
TEST
ZEROA
BCK
LRCK
DATA
SCK
VOUTL
VCOM
VOUTR
[VCC]
[NC]
[AGND]
[DGND]
V47GD0000998
OP-AMP [L4580] IC302
A-INPUT
A+INPUT
B-INPUT
B+INPUT
AOUTPUT
BOUTPUT
[V+]
[V-]
RC4580IPWR
Analogue Audio out
LOUT
ROUT
P212B [SNO]
V22GD0000971
U03A AV_TERM [1] CONNECTOR (PE0406)
P212B → P212A
M_LOUT_MUTE
M_ROUT_MUTE
Q301 NOT MOUNT
Q302 NOT MOUNT
FL303 NOT MOUNT
FL304 NOT MOUNT
FL611 MPZ1608S600AT
A_ABCK0
A_ALRCK0
A_ASD00
A_AOSCLK0
FMT
0 16-24bit I2S
1 16bit RJ
DEMH DE-EMPHASIS (44.1kHz)
0 OFF
1 ON
MUTE
0 Normal
1 Mute
Q611 2SC4116-Y (TE85L, F)
[FL09B] FL615
B_CVBS
FL610 MPZ1608S221AT
FL612 MPZ1608S600AT
[V-L1672] IC611
PS
IN
SAG
OUT
[VCC]
[GND]
D611 NOT MOUNT
CVBS OUTPUT
U05A DIGITAL [300] AUDIO DAC (ASP0) (PE0284)

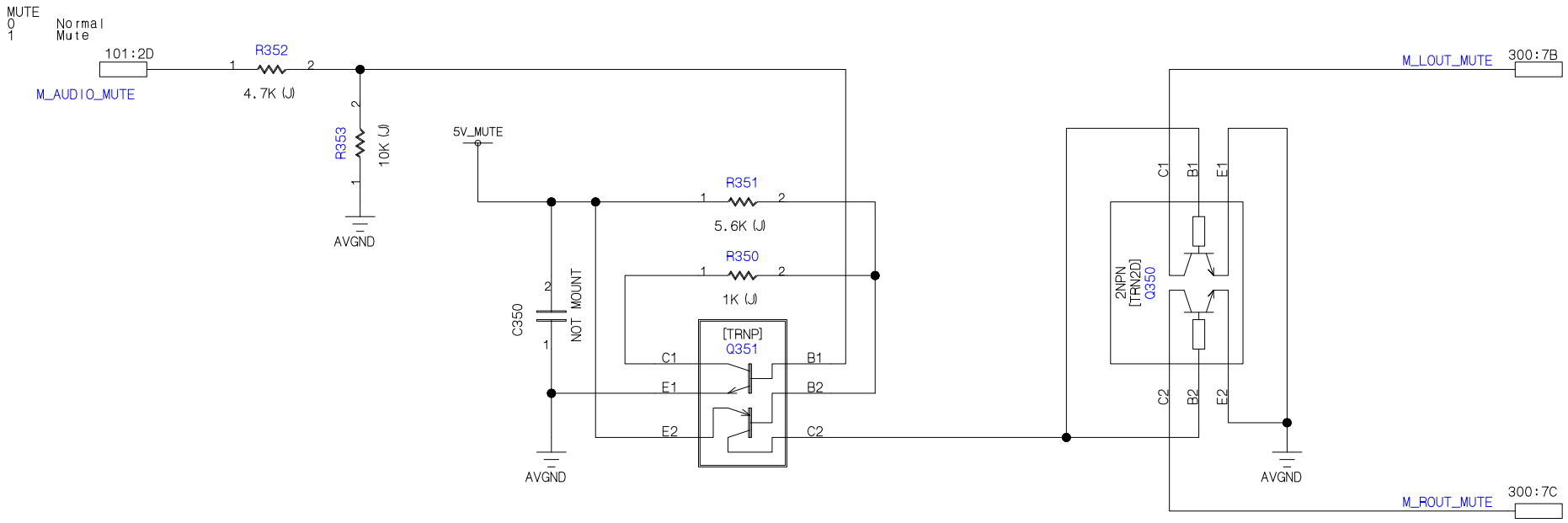

U05A DIGITAL [301] AUDIO MUTE (PE0284)

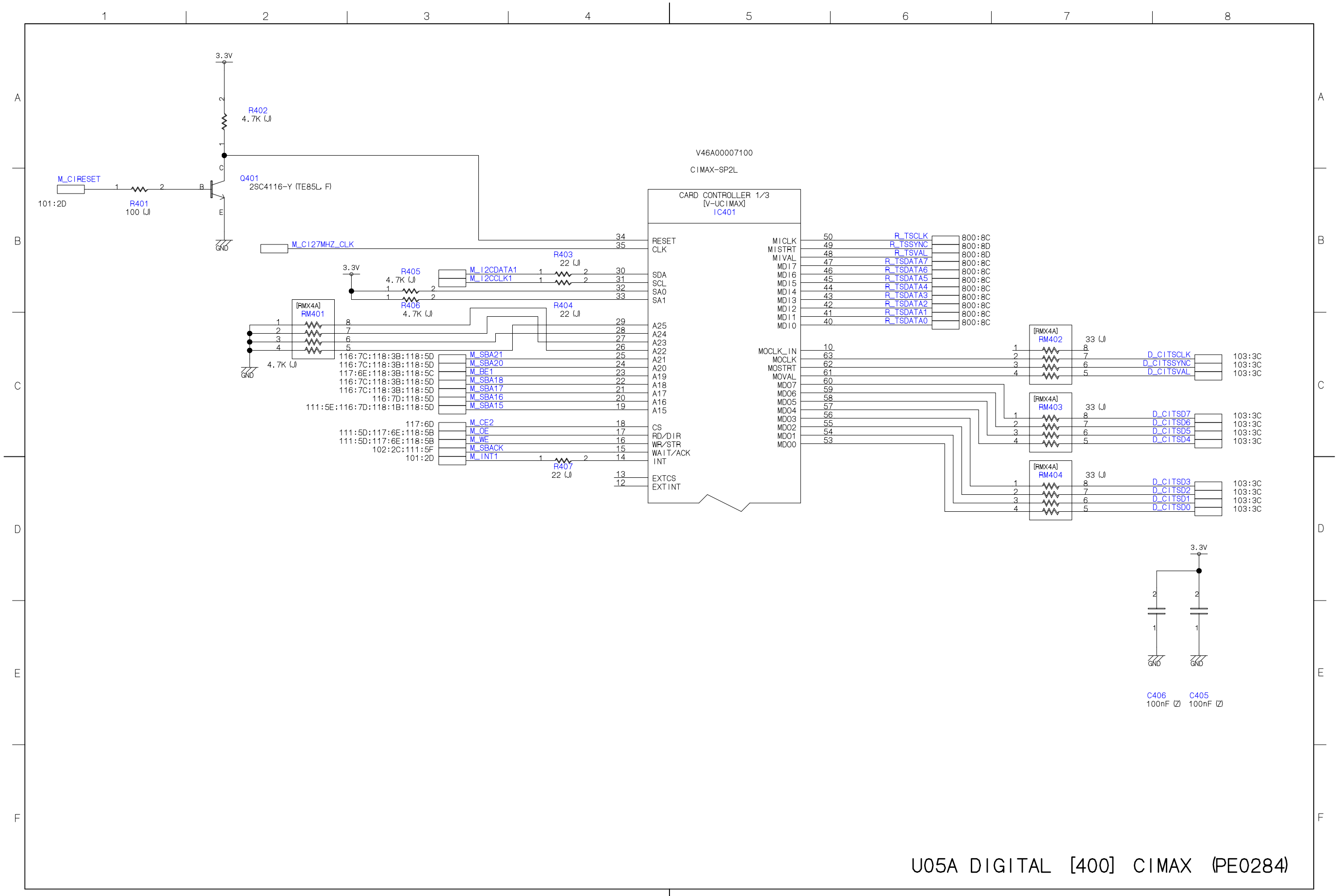

U05A DIGITAL [400] CIMAX (PE0284)

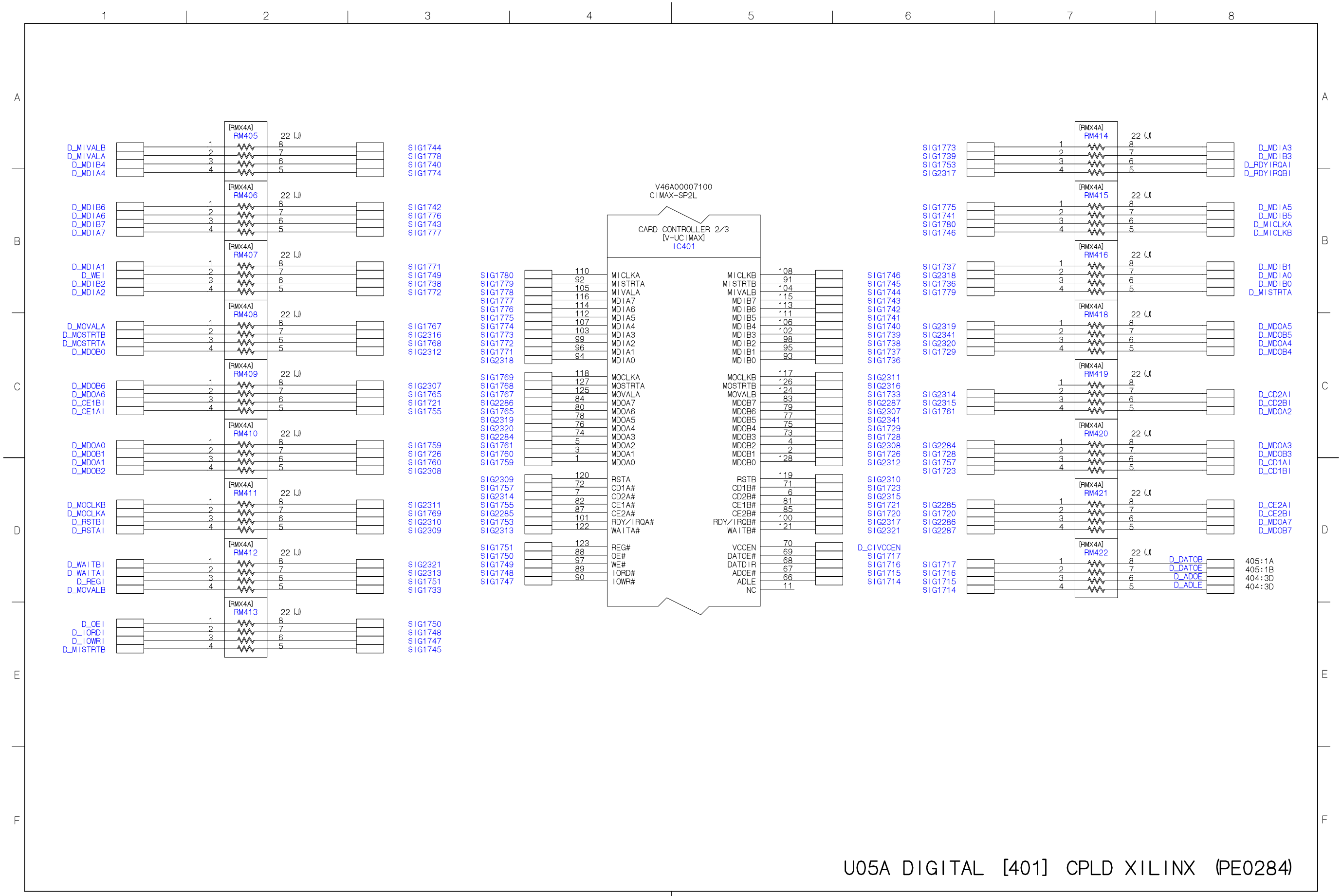

U05A DIGITAL [401] CPLD XILINX (PE0284)

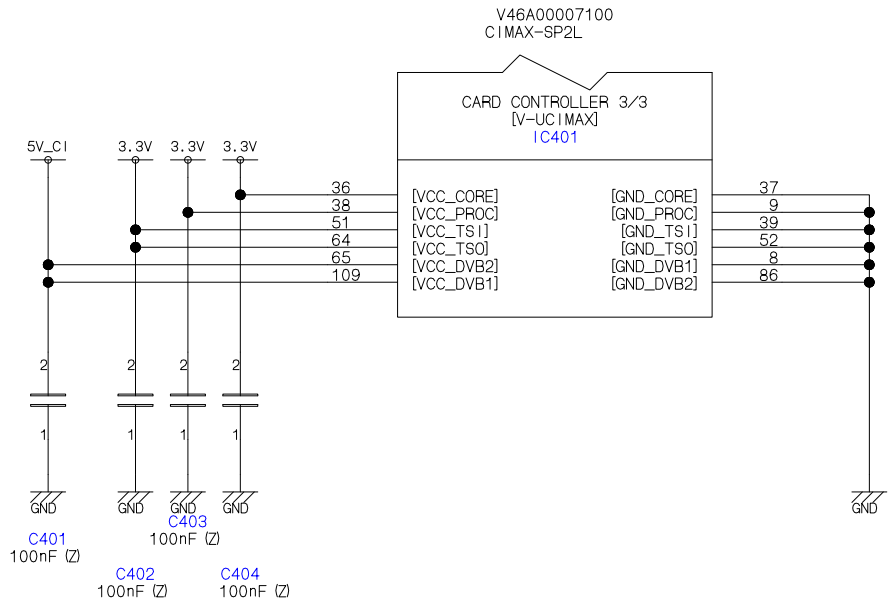

U05A DIGITAL [402] CPLD XILINX (PE0284)

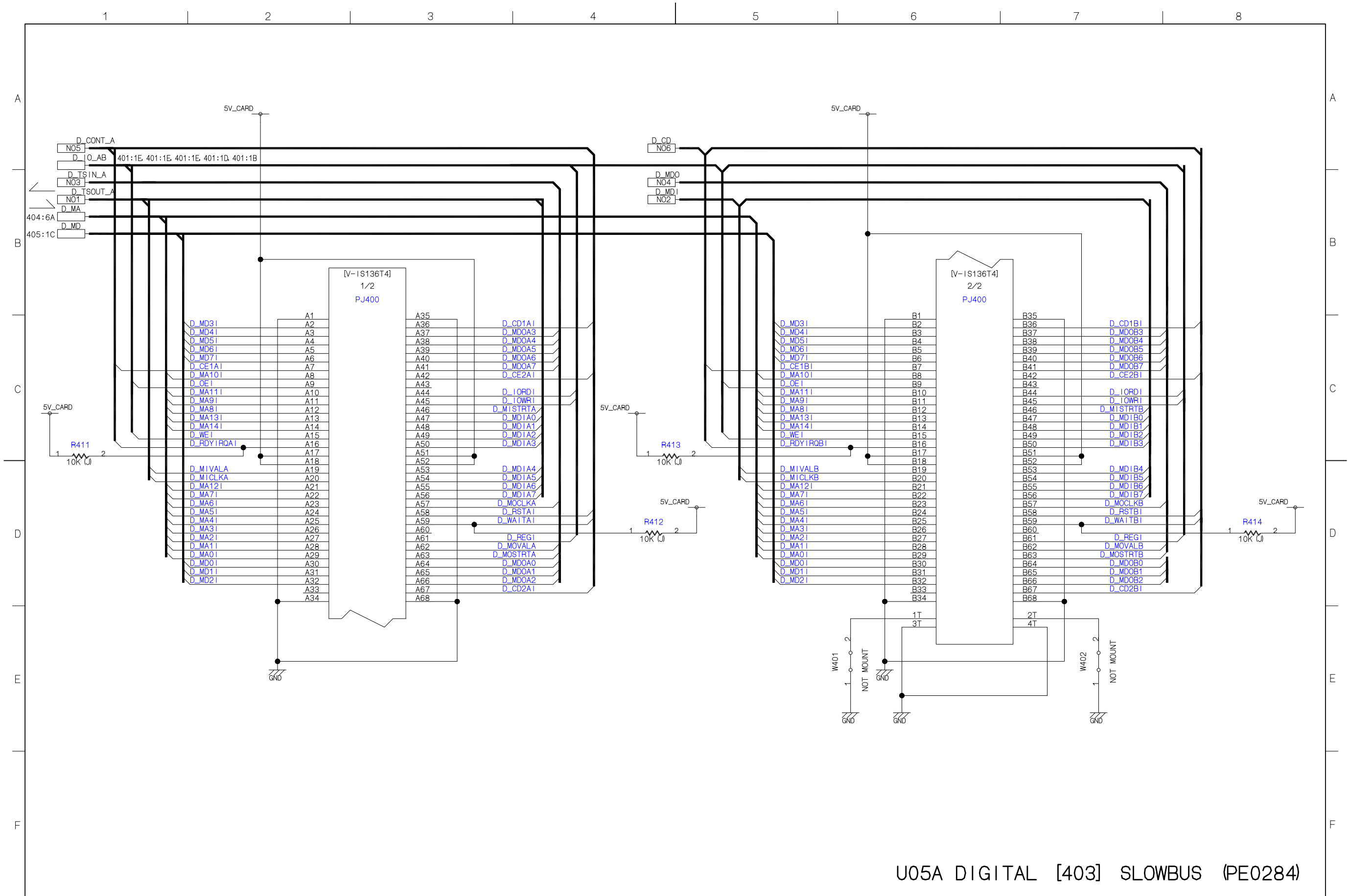

U05A DIGITAL [403] SLOWBUS (PE0284)

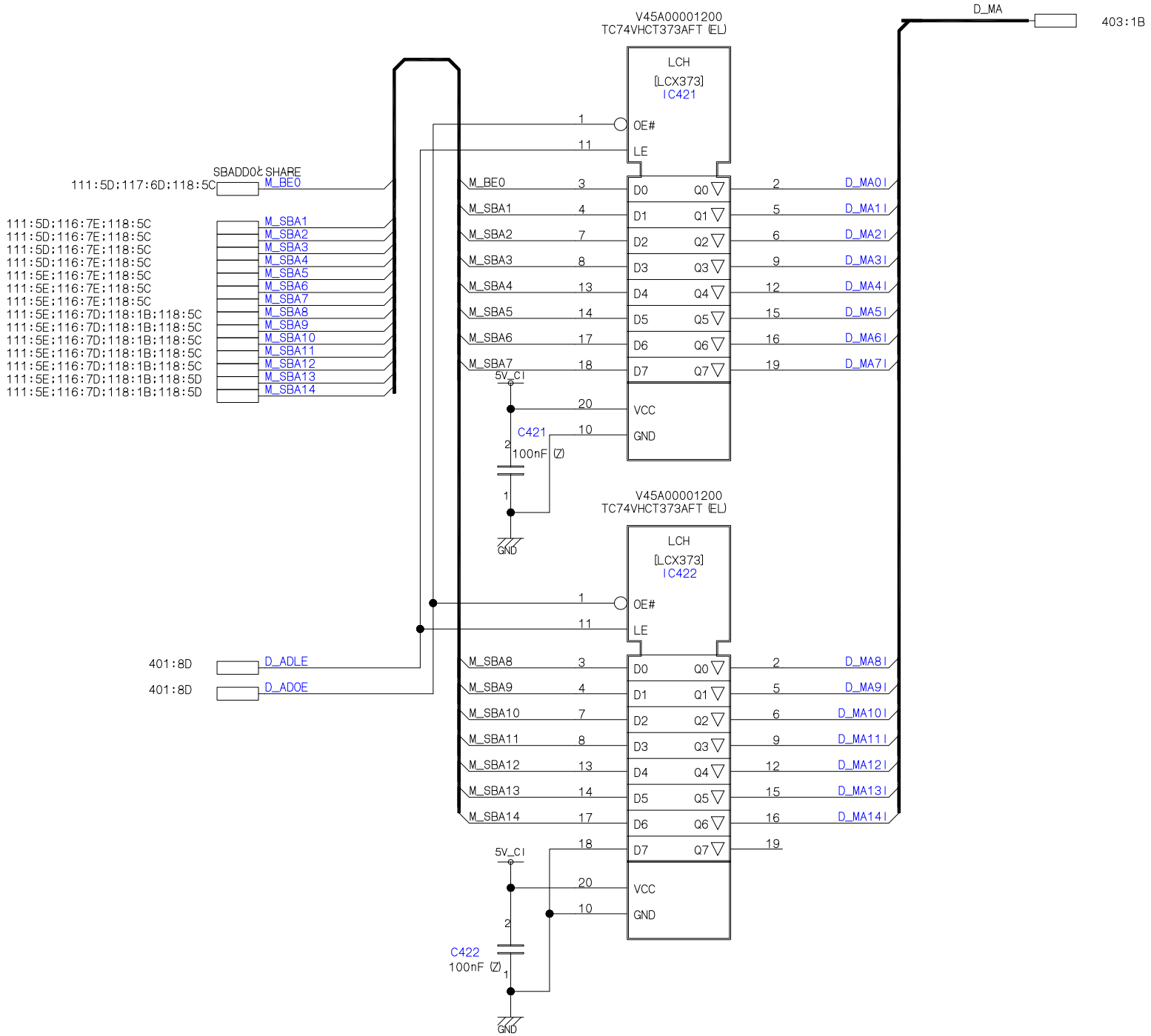

U05A DIGITAL [404] PODVPP (PE0284)

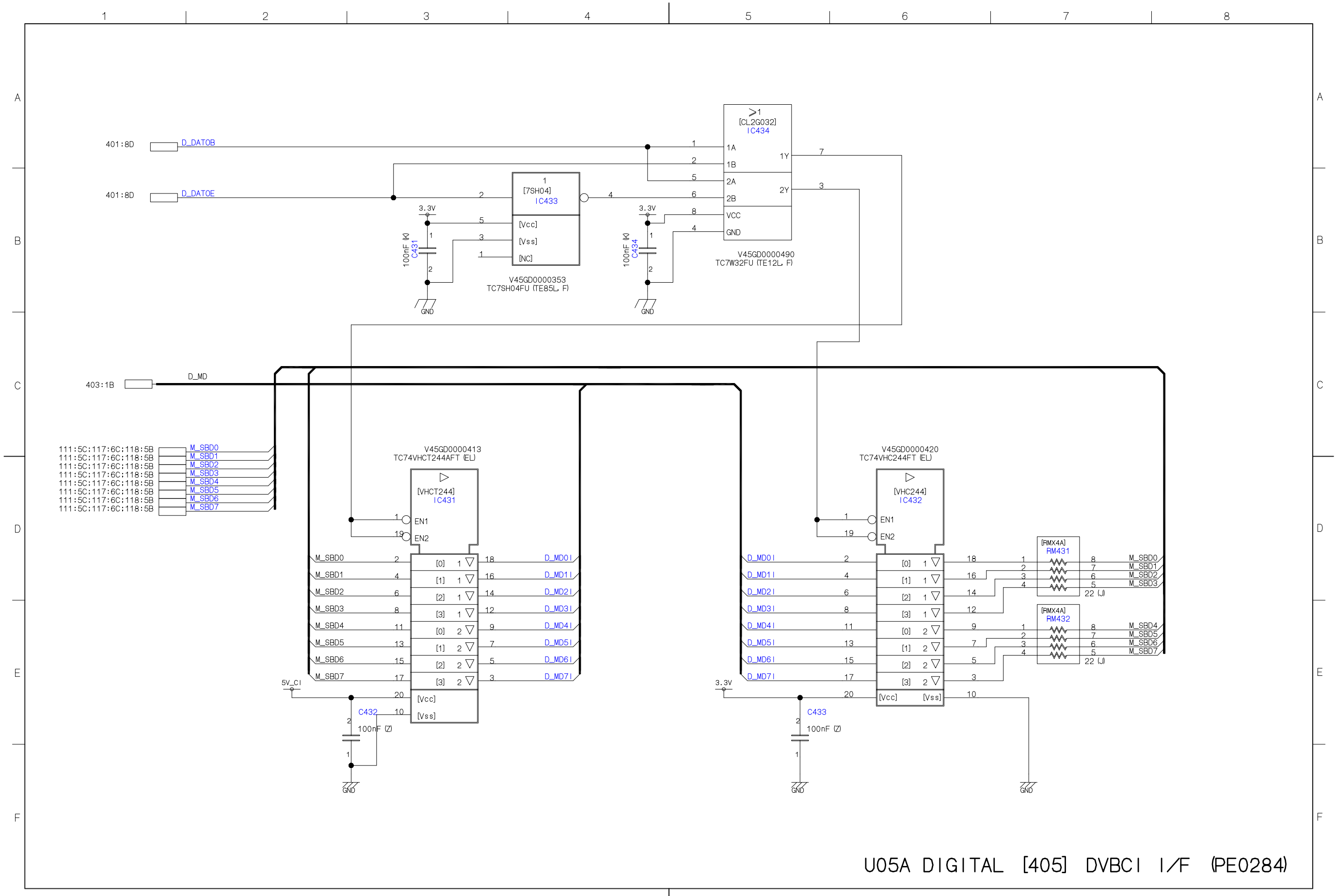

U05A DIGITAL [405] DVBCI I/F (PE0284)

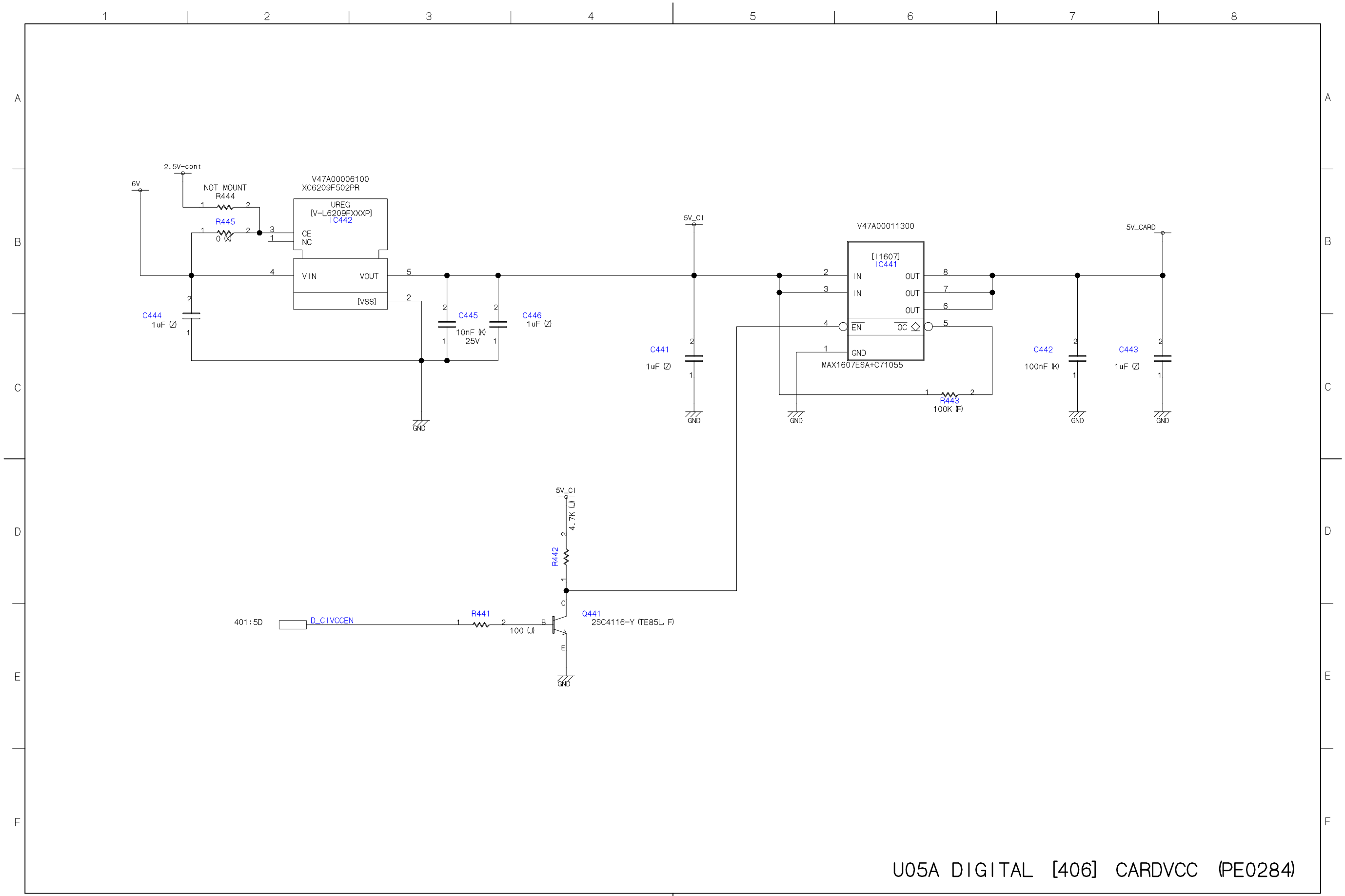

U05A DIGITAL [406] CARDVCC (PE0284)

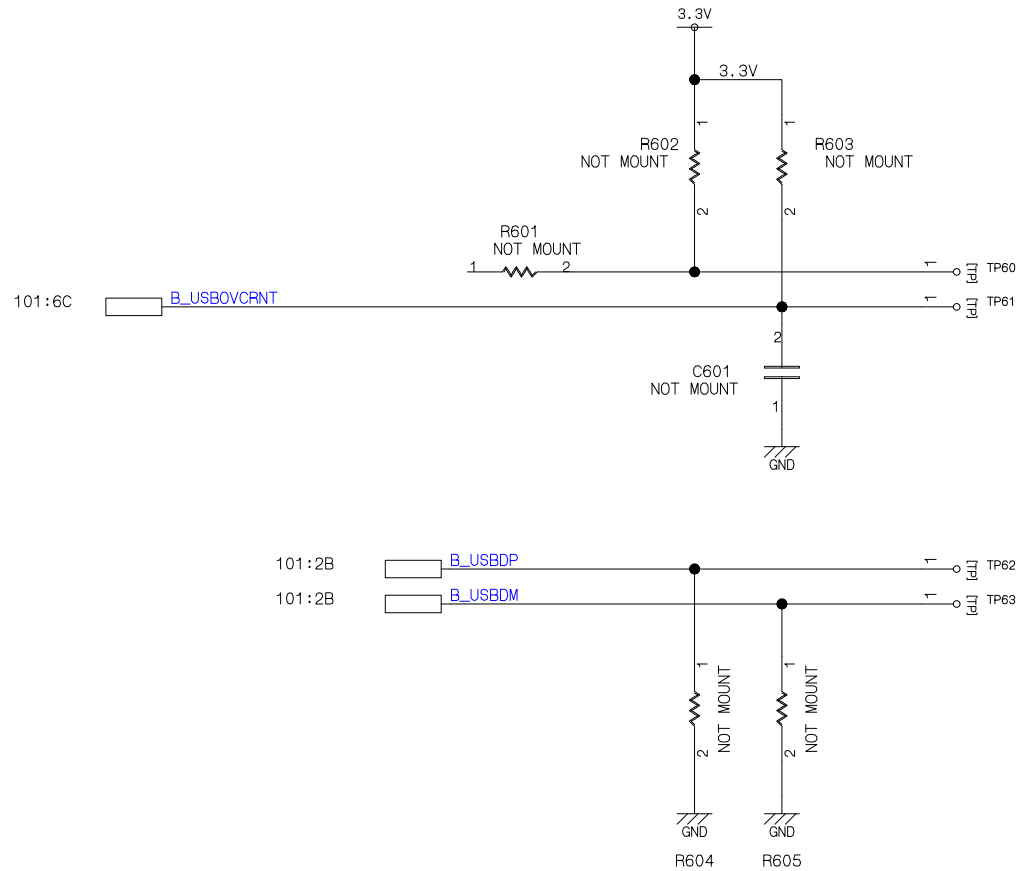

U05A DIGITAL [600] USB (PE0284)

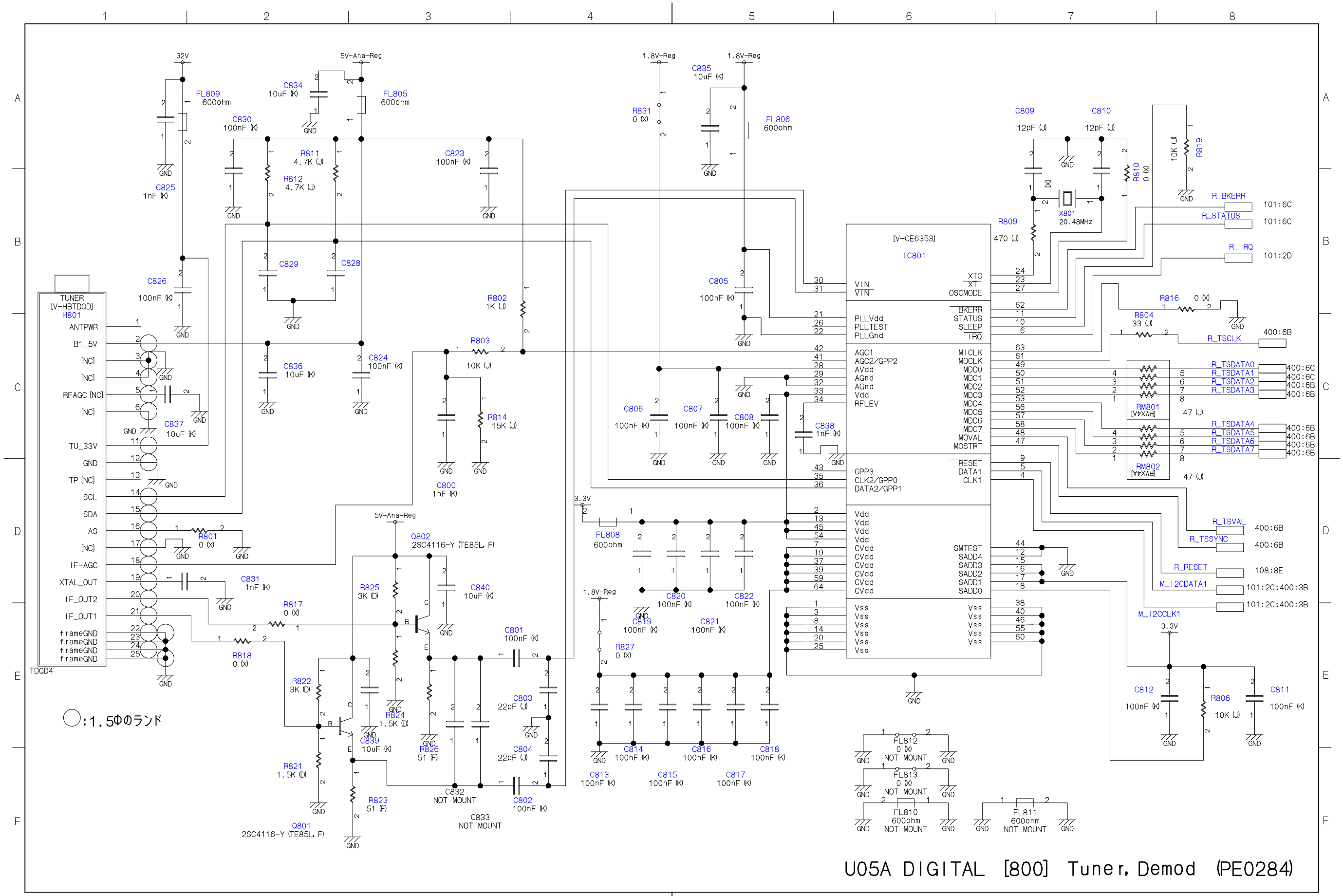

U05A DIGITAL [800] Tuner, Demod (PE0284)

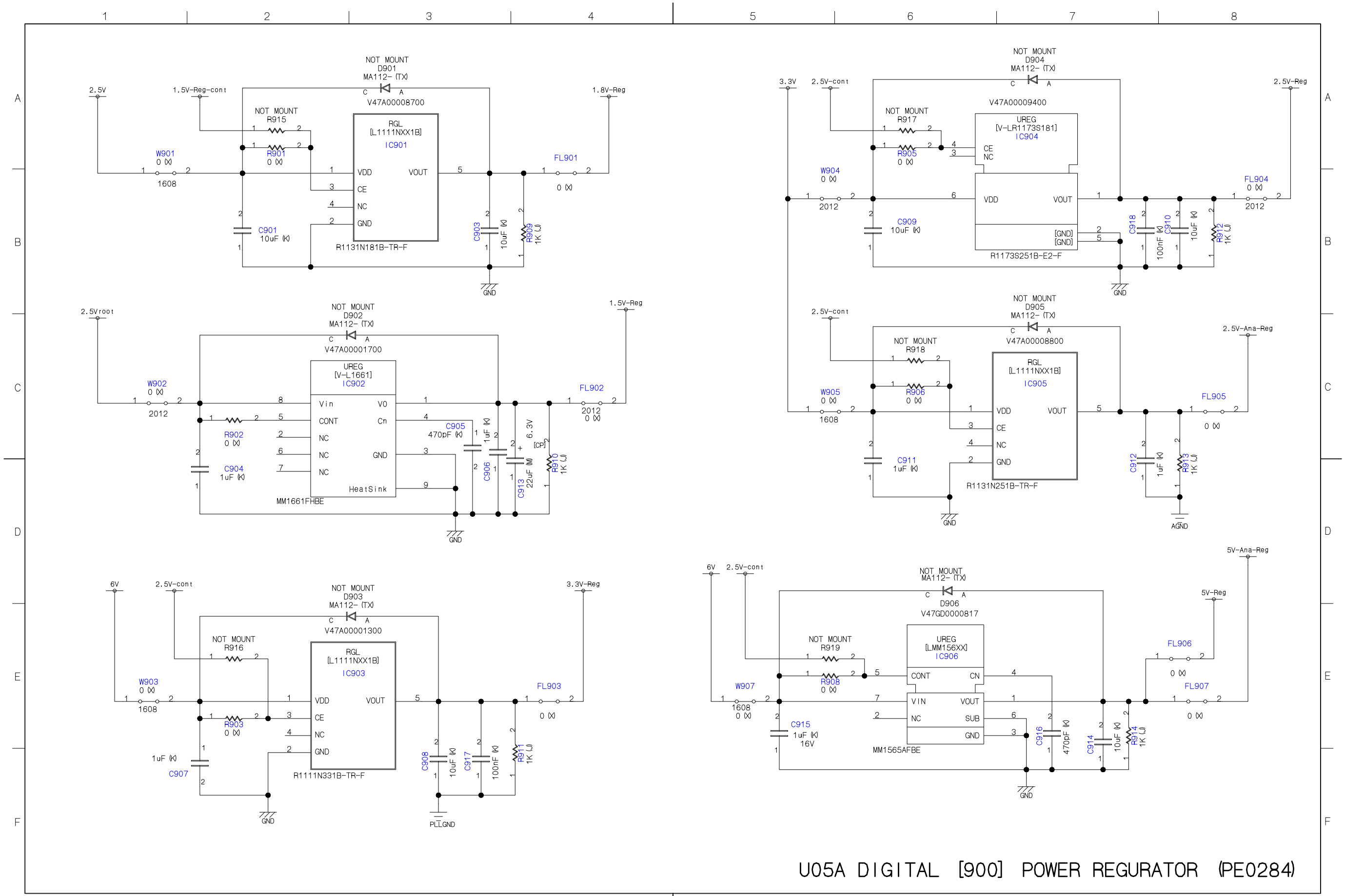

U05A DIGITAL [900] POWER REGURATOR (PE0284)

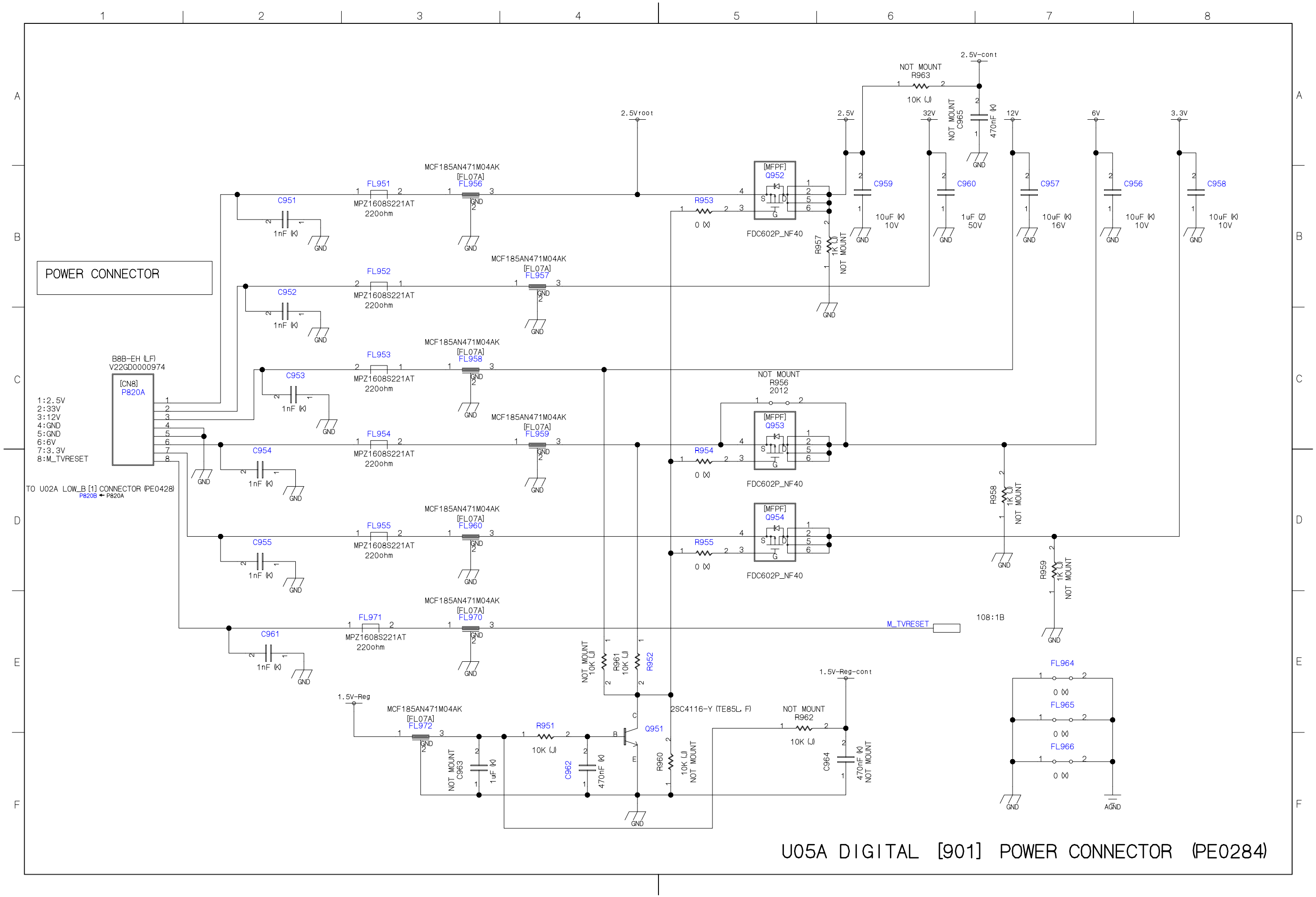

U05A DIGITAL [901] POWER CONNECTOR (PE0284)

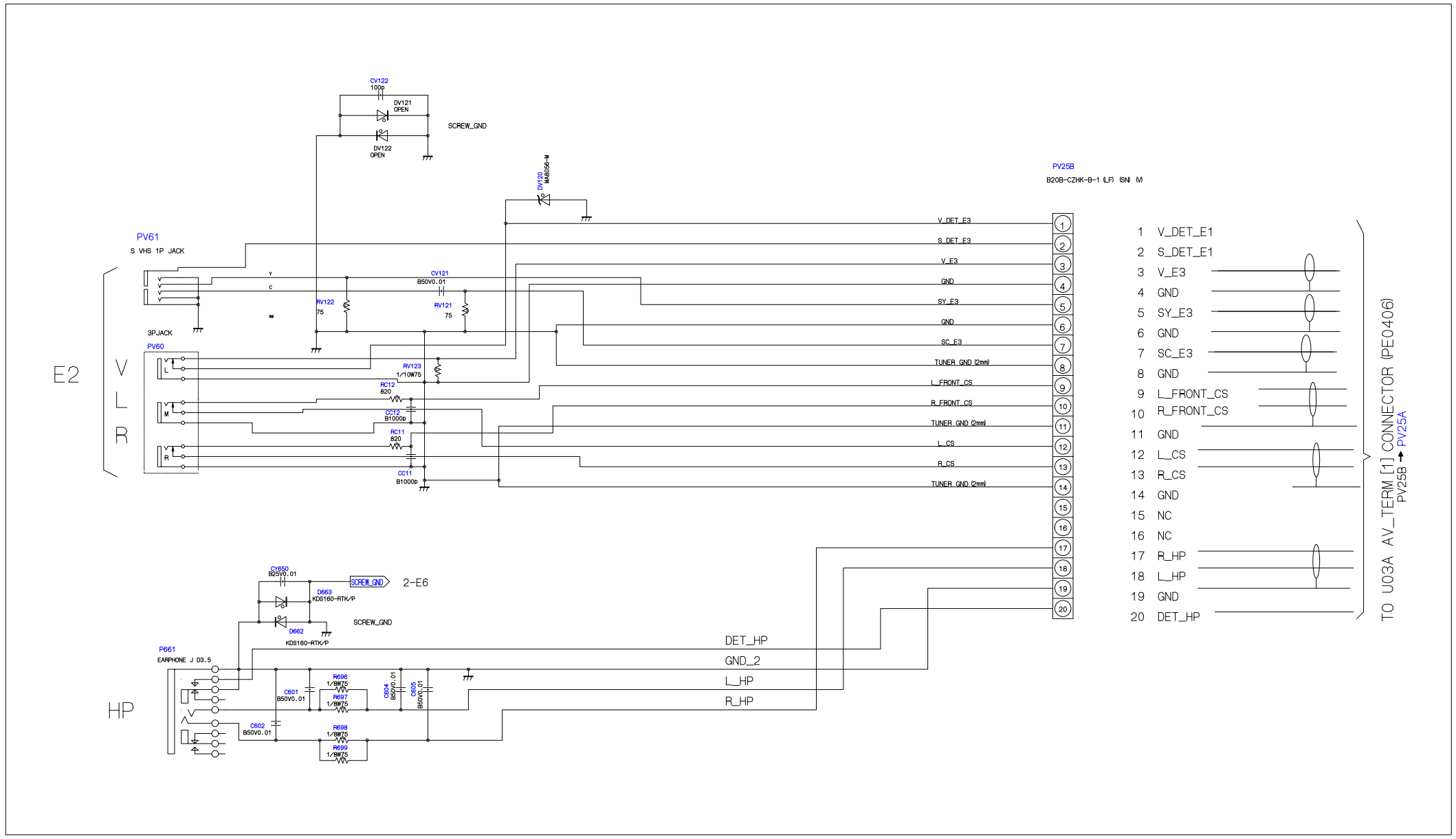

PL31
WIRE CLIP

U06A FRONT_HDMI [1] FRONT-AV (PE0400)

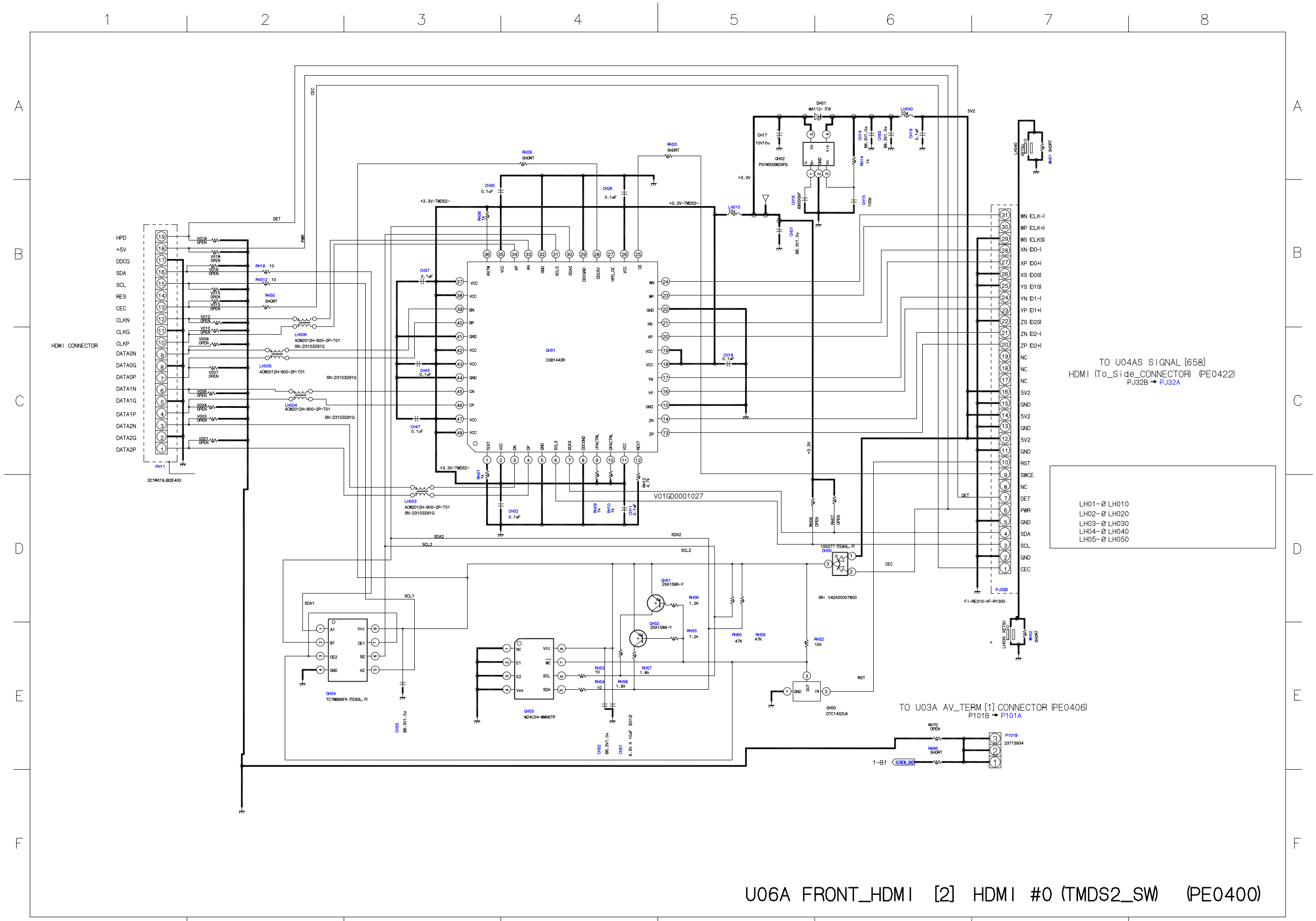
HDMI CONNECTOR
HPD
+5V
DDCG
SDA
SCL
RES
CEC
CLKN
CLKG
CLKP
DATA0N
DATA0G
DATA0P
DATA1N
DATA1G
DATA1P
DATA2N
DATA2G
DATA2P
QH01
CX81443R
QH02
PQ1M335M2SPQ
DH01
MA112-ITX
QH51
2SA1586-Y
QH52
2SA1586-Y
QH53
M24C04-WMN6TP
QH54
TC7MB66FK (TE85L, F)
QH50
DTC143ZUA
QH49
155377 (TE85L, F)
V01GD0001027
TO U04AS SIGNAL [658]
HDMI (To_Side_CONNECTOR) (PE0422)
PJ32B → PJ32A
LH01-Ø LH010
LH02-Ø LH020
LH03-Ø LH030
LH04-Ø LH040
LH05-Ø LH050
TO U03A AV_TERM [1] CONNECTOR (PE0406)
P101B → P101A
U06A FRONT_HDMI [2] HDMI #0 (TMDS2_SW) (PE0400)

U01A POWER [Bottom] (PE0282)

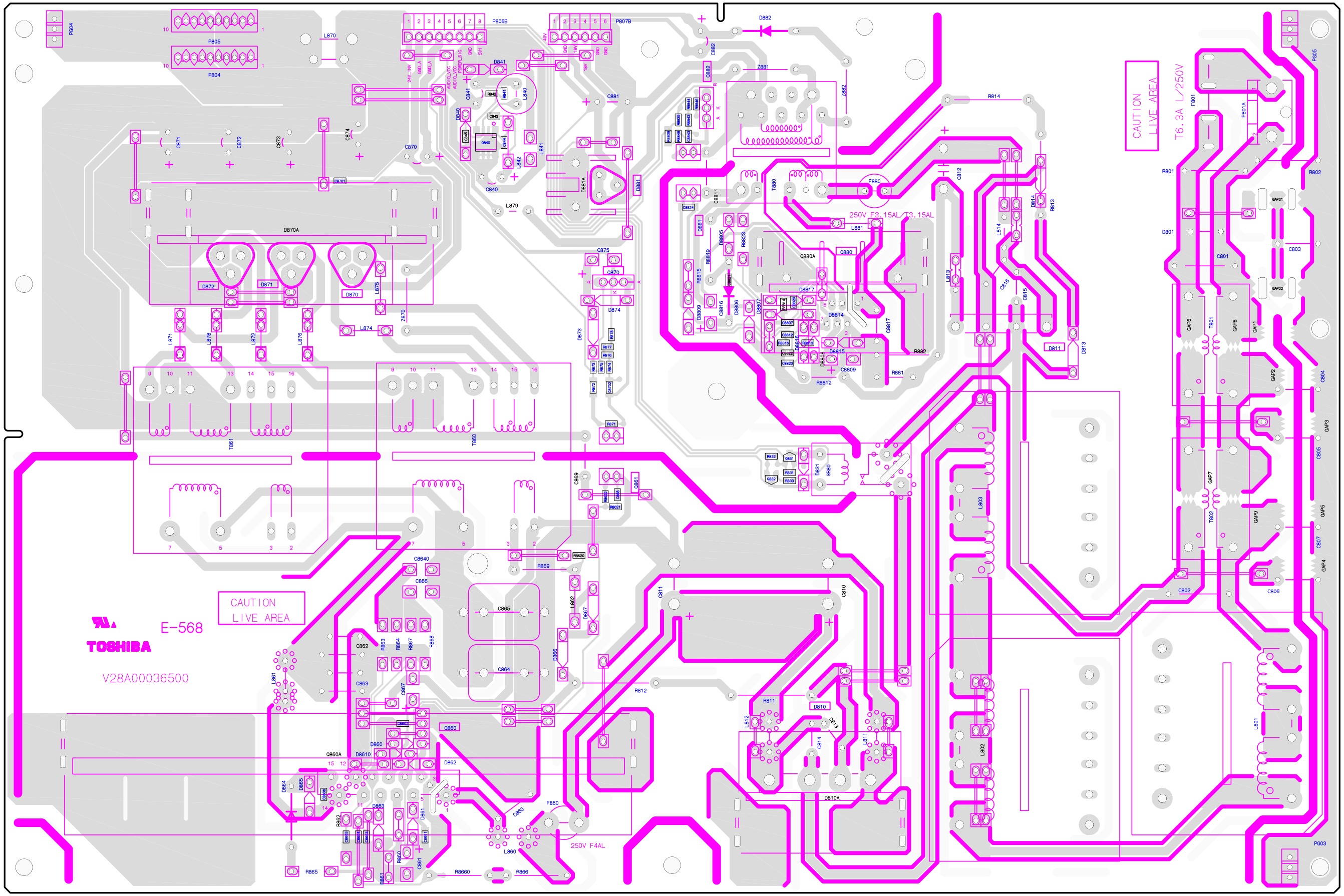

U02A LOW_B [Bottom] (PE0428)

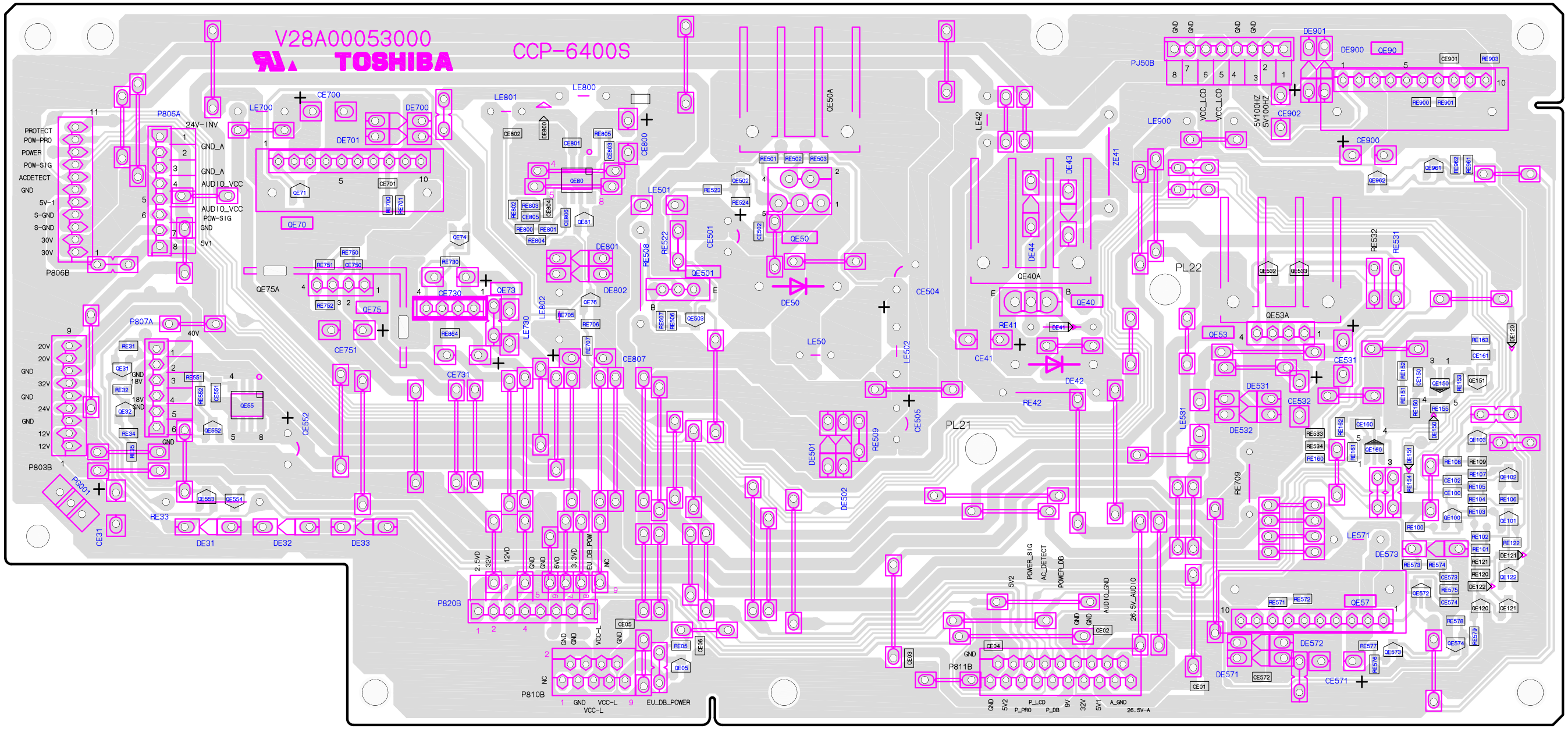

U03A AV_TERM [Top] (PE0406)

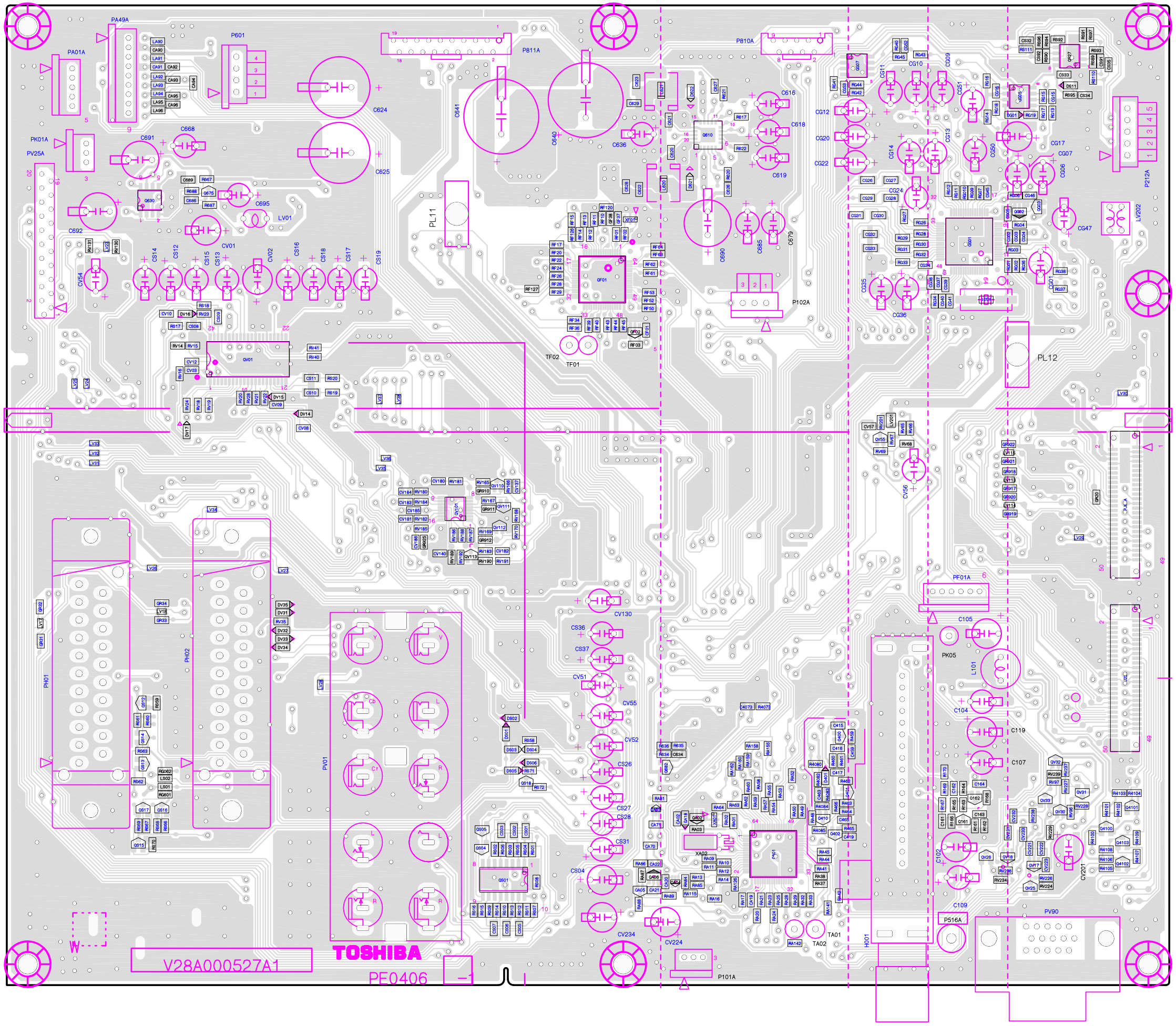

U03A AV_TERM [Bottom] (PE0406)

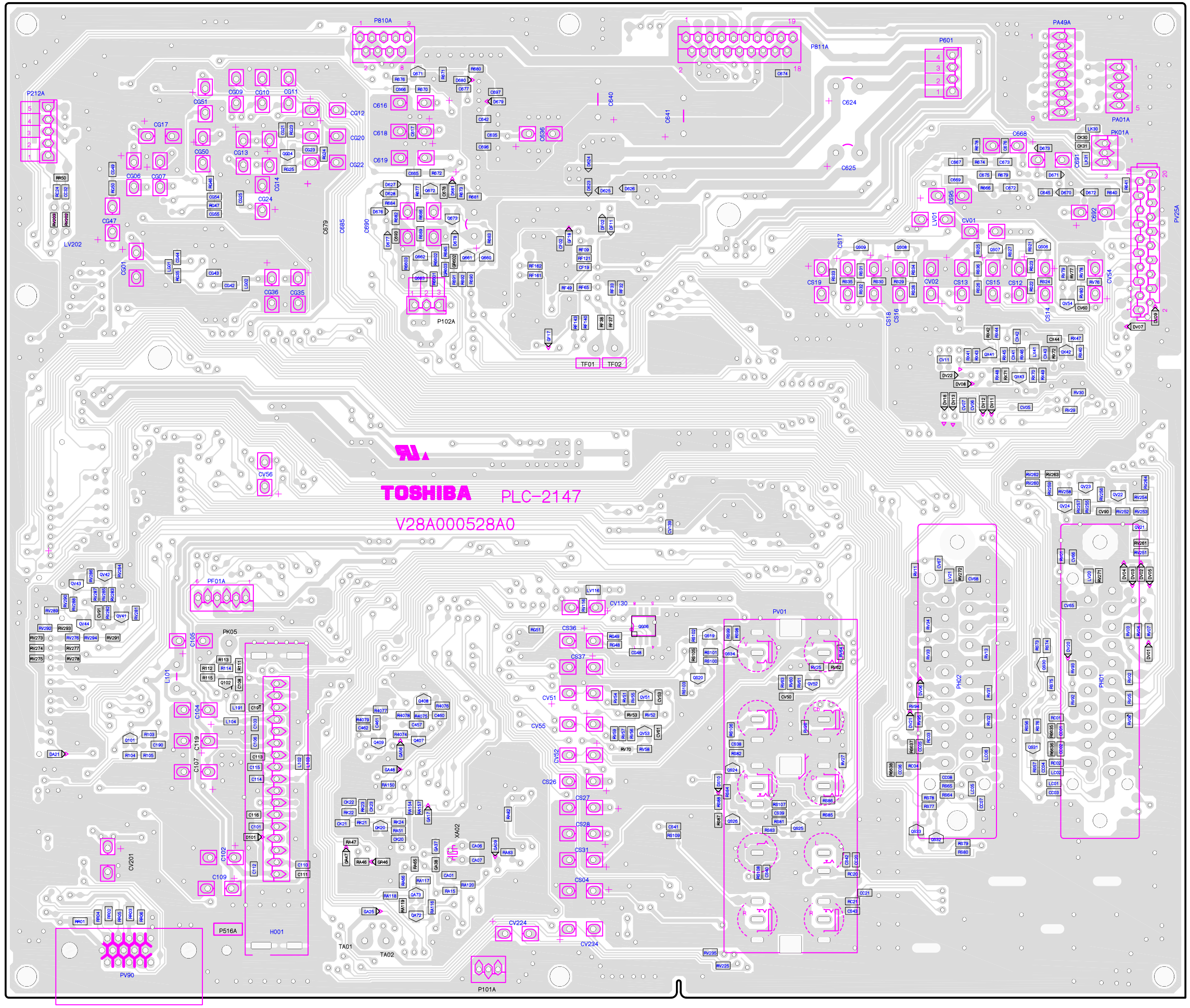

U03B LED [Top] (PE0406)

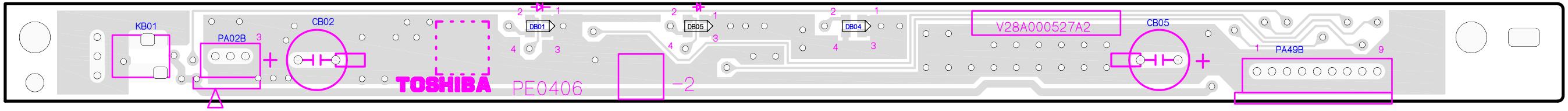

U03B LED [Bottom] (PE0406)

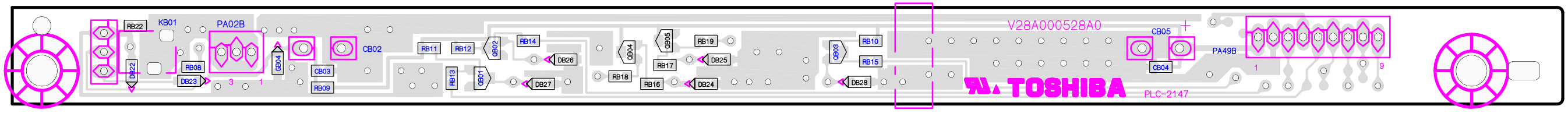

U03C KEY [Top] (PE0406)

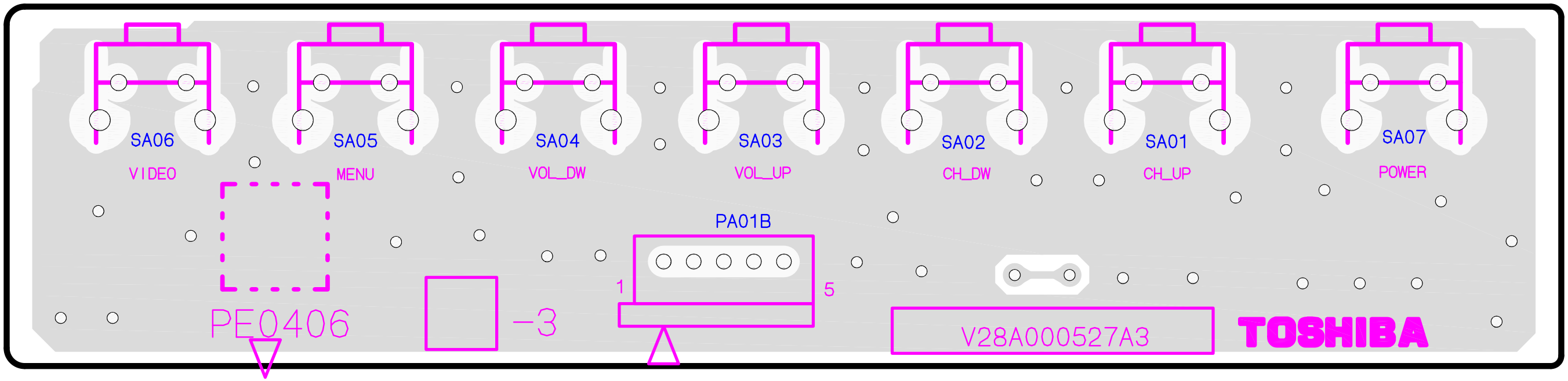

U03C KEY [Bottom] (PE0406)

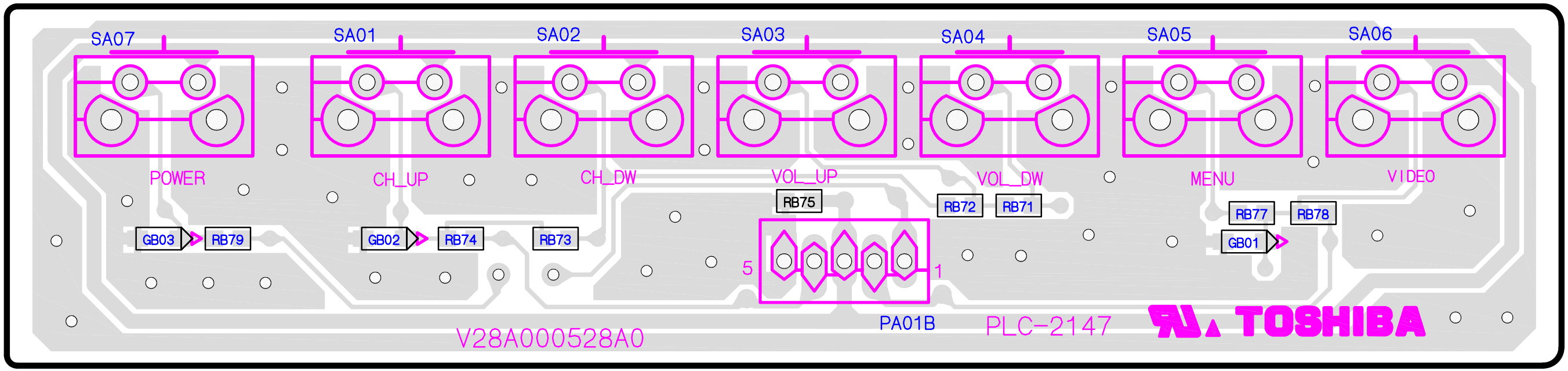

U03D ILLUMI [Top] (PE0406)

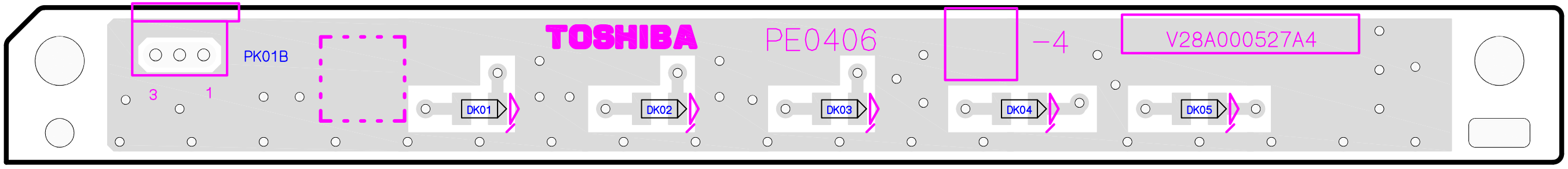

U03D ILLUMI [Bottom] (PE0406)

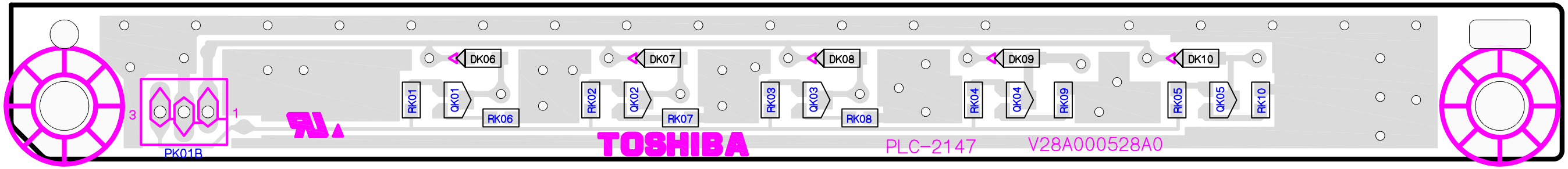

U04AS SIGNAL [Top] (PE0422)

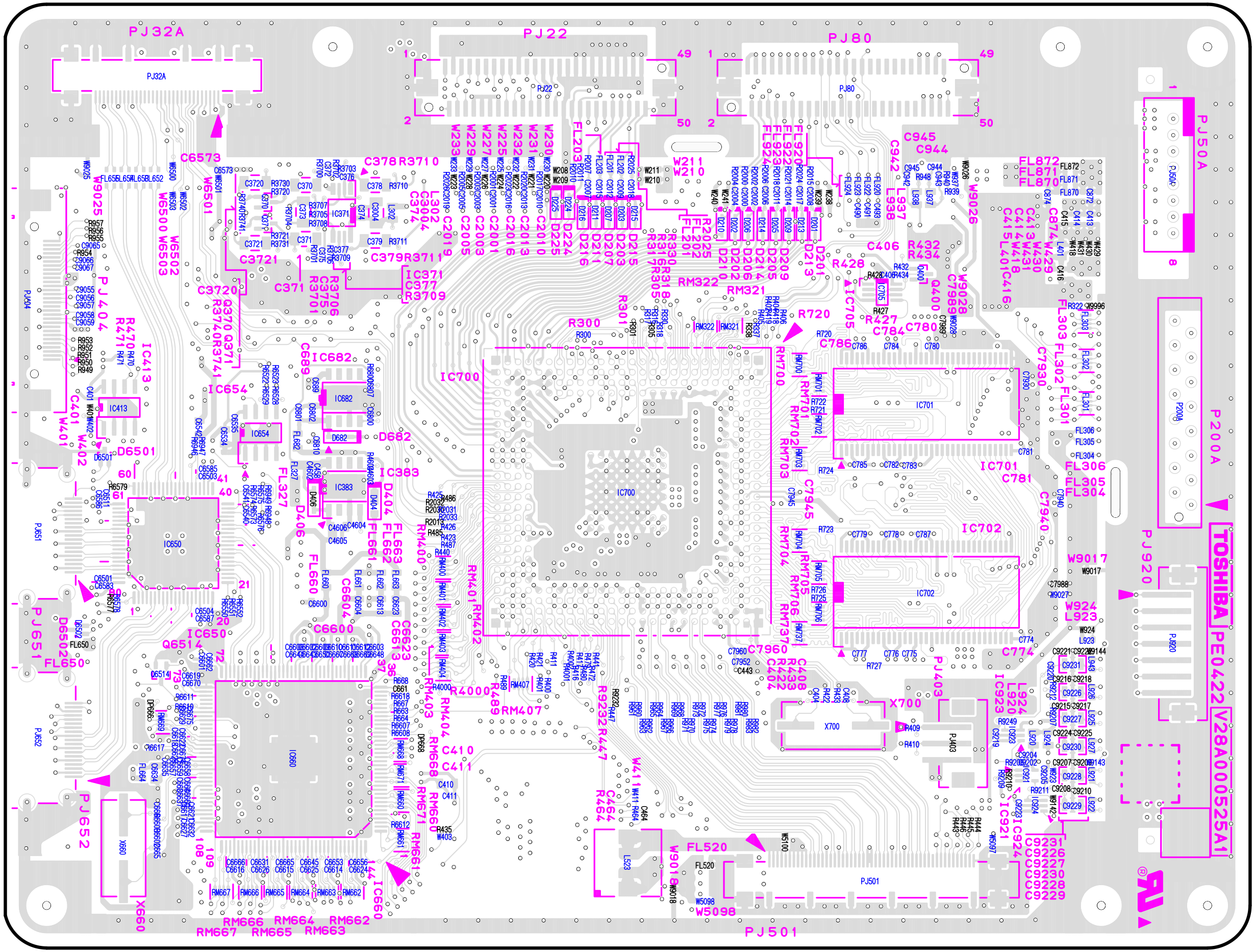

U04AS SIGNAL [Bottom] (PE0422)

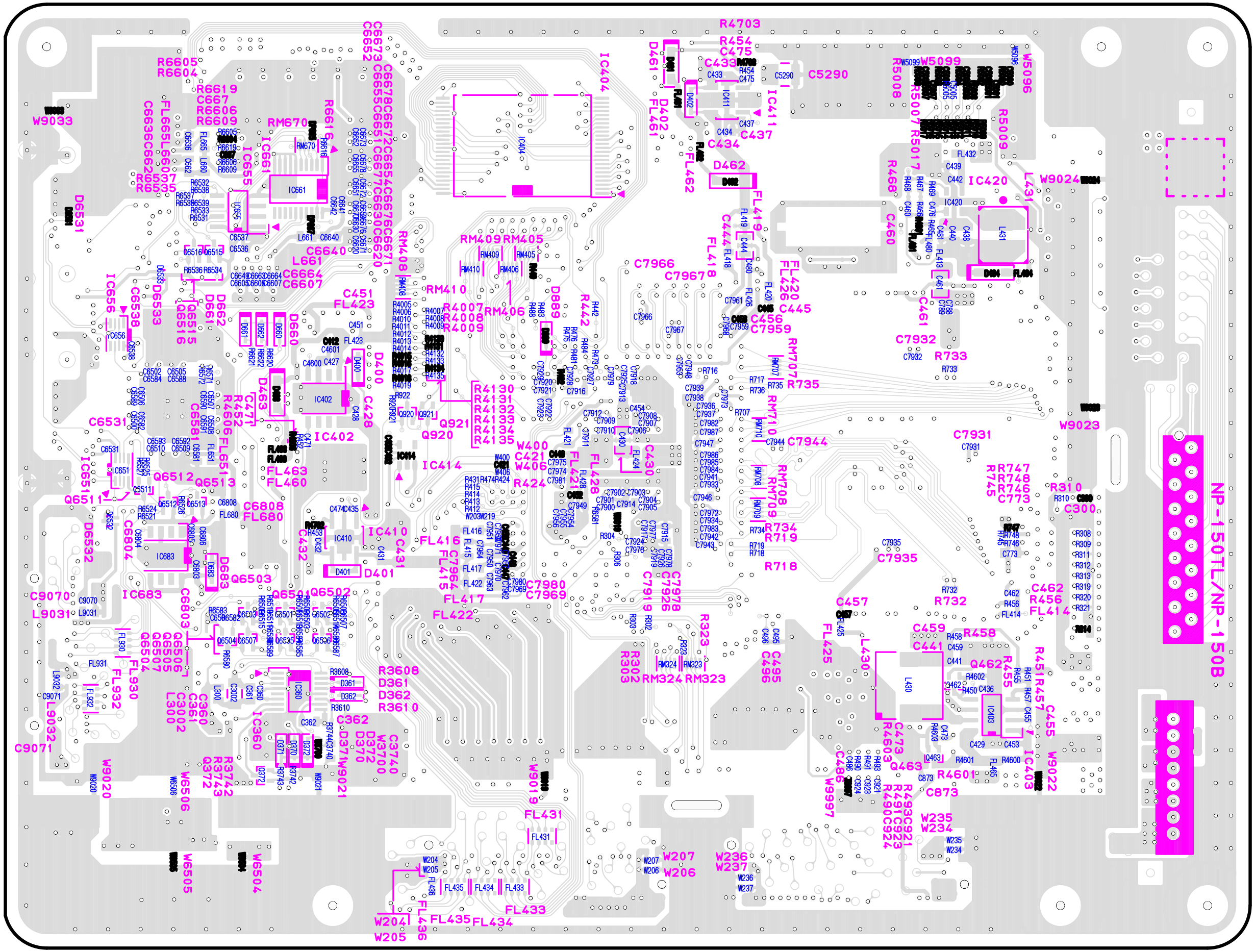

U05A DIGITAL [Top] (PE0284)

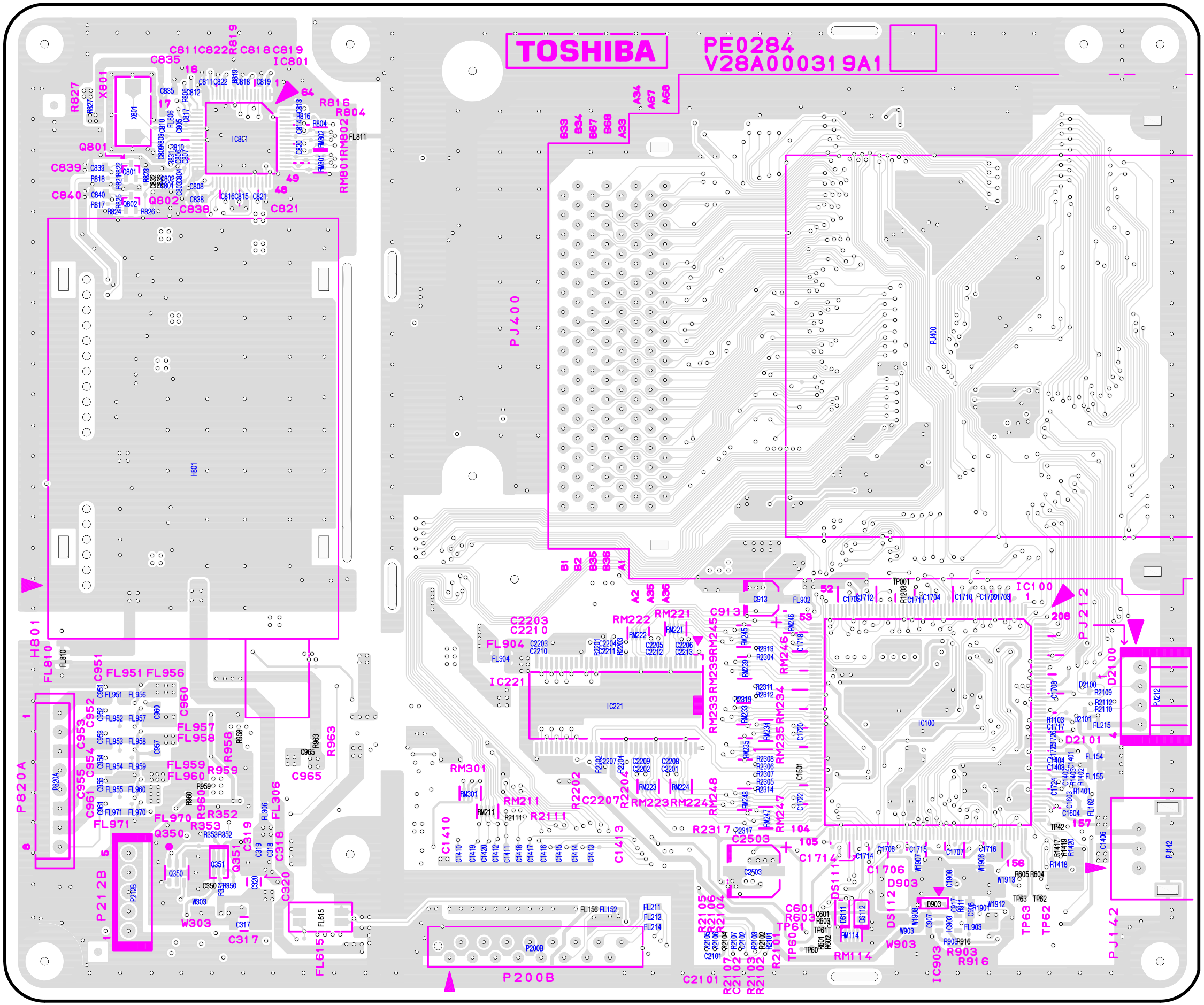

U05A DIGITAL [Bottom] (PE0284)

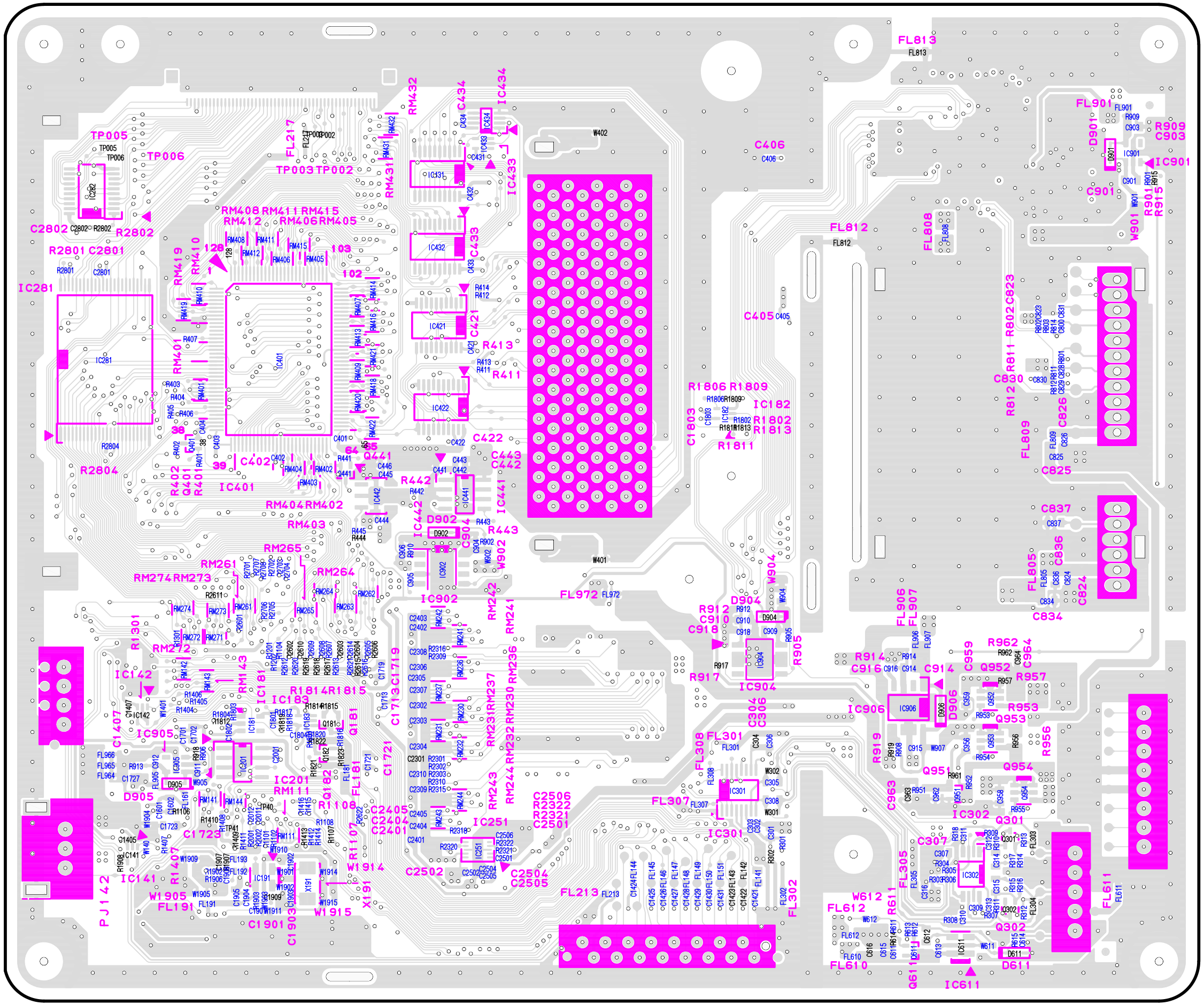

U06A FRONT_HDMI [Top] (PE0400)

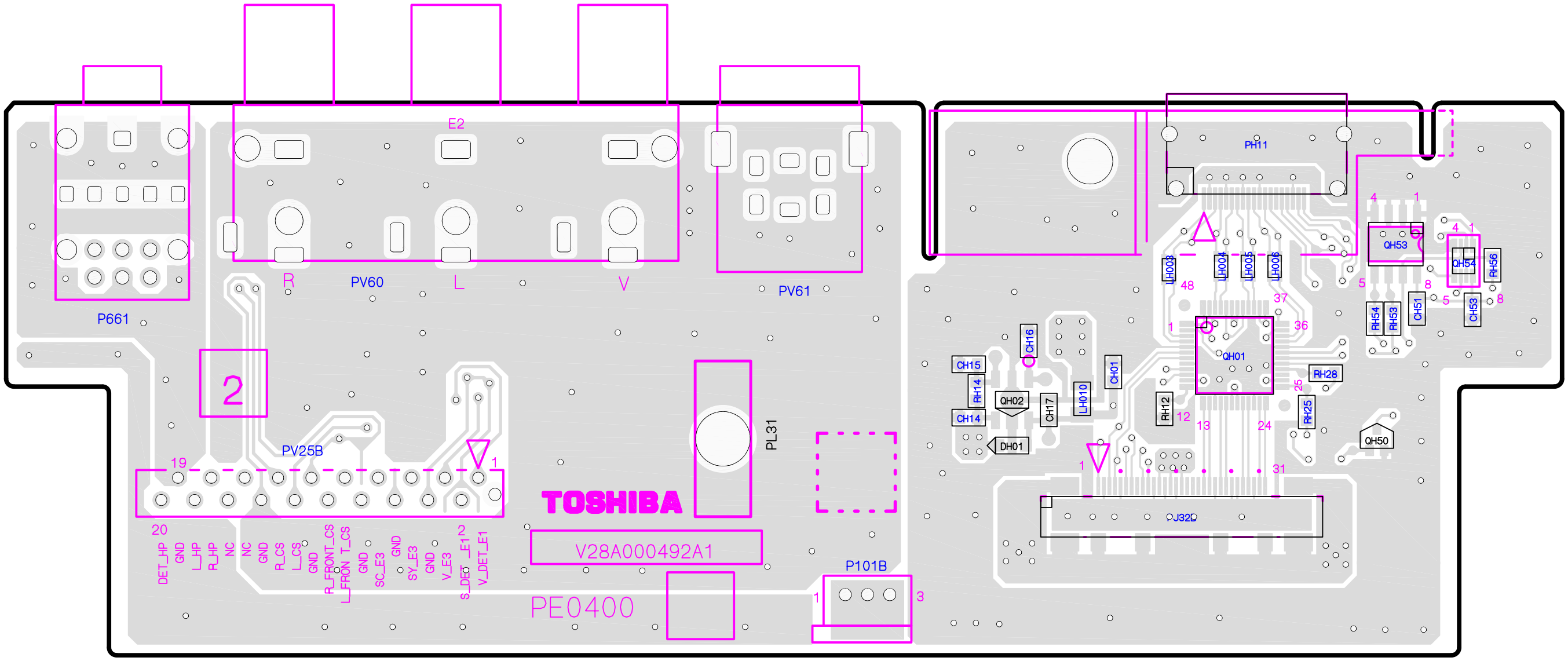

U06A FRONT_HDMI [Bottom] (PE0400)

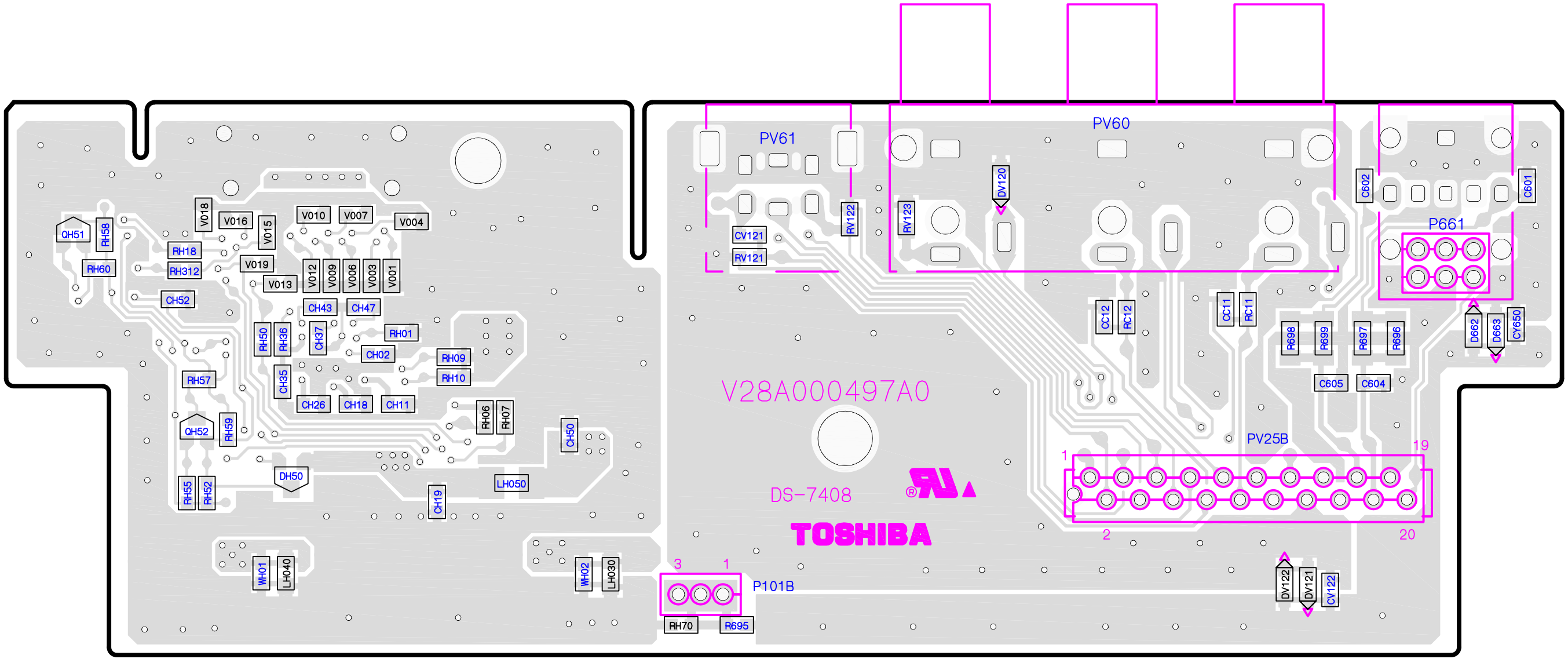

CAUTION FOR REMOVING HDMI CONNECTOR

When removing the SIGNAL unit, pay attention to disconnect the connector LVDS cable connector which has the lock claws.
The lower part clearance between the lock claw and metal chassis is too narrow.
To avoid any possible damages, follow the procedure below.

Procedure 1 (Recommended Strongly)

By removing the fixing screws on the Signal unit, it will be free and ease to release the lock claws.

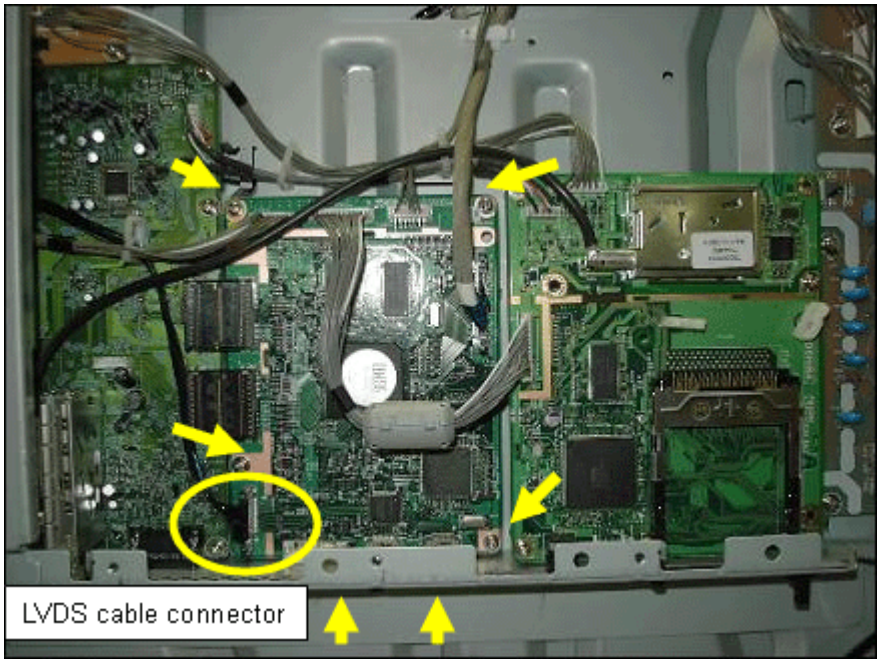

Procedure 2

While releasing the lower part lock claw with flat bed screwdriver and the upper lock claw with finger, pull out the connector.

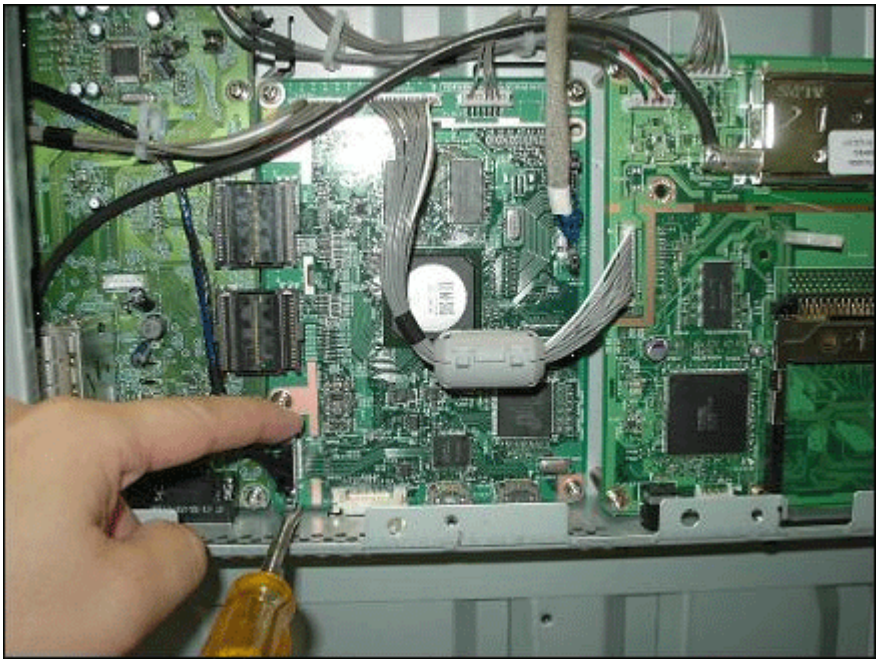

ADJUSTMENT

Service Mode

Entering to Service Mode

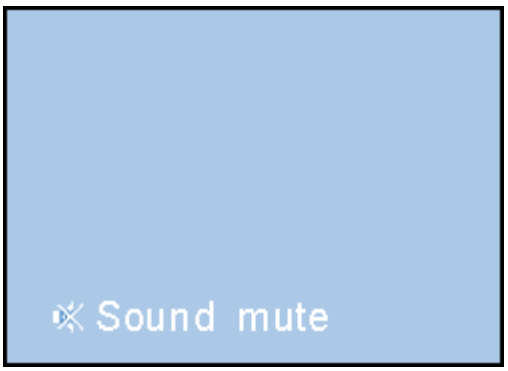

1. Set VOLUME to minimum and press button once on remote control.

↓

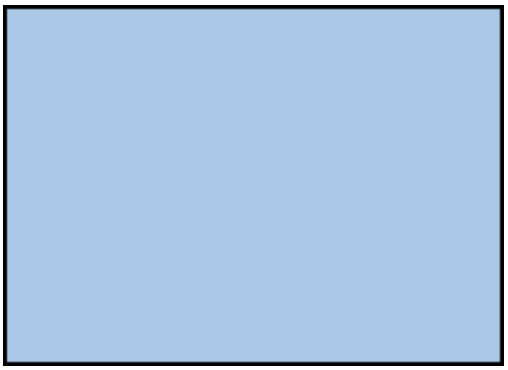

2. Press button again and hold button down.

↓

Service Mode display

3. While holding the button, press MENU button on TV set.

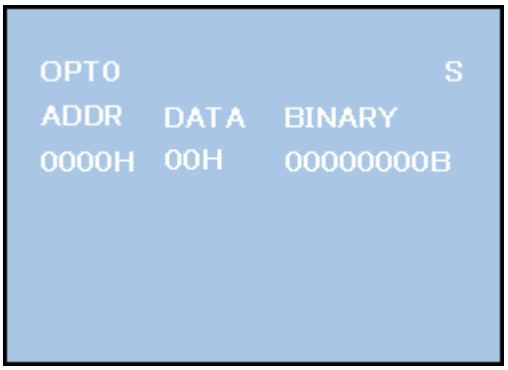

Displaying the Adjustment Menu

Press MENU button on TV.

Service Mode

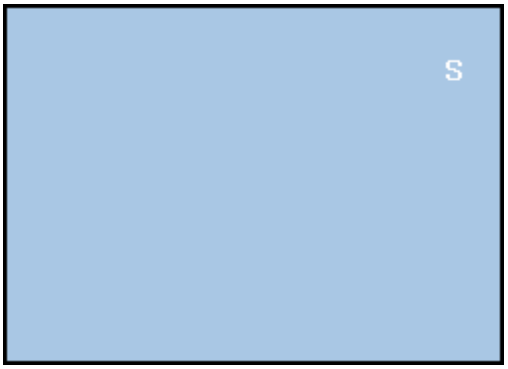

Press ↑ ↓ Press

Adjustment Mode

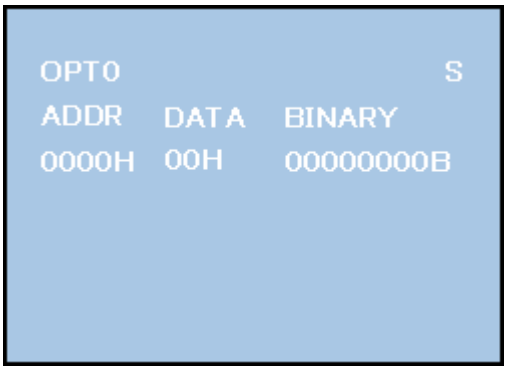

Key Function in the Service Mode

The following key entry during display of adjustment menu provides special functions.

CAUTION: Never try to perform initialization unless you have changed the memory IC.

Test signal selection	button (on remote control)
Selection of the adjustment items	CH ▲/▼ (on TV or remote control)
Change of the data value	Volume +/- (on TV or remote control)
Adjustment menu mode ON/OFF	MENU button (on TV)
Initialization of the memory (QA02)	CALL + CH ▲ button on TV
Reset the count of operating protect circuit to "00"	CALL + CH ▼ button on TV
Turn off I2C bus communication	CALL + Volume + button on TV
"RCUT" selection	1 button
"GCUT" selection	2 button
"BCUT" selection	3 button
"CNTX" selection	4 button
"COLC" selection	5 button
"UVTT" selection	6 button
Automatic A/D Adjustment (PC, Component, Composite (PAL, NTSC))	7 button
Self diagnostic display ON/OFF	9 button

Selecting the Adjusting Item

Every pressing of CH ▲ button in the service mode changes the adjustment items in the order of table below. (▼ button for reverse order)

SETTING & ADJUSTING DATA

[SERVICE MODE]

ADJUSTING ITEMS AND DATA IN THE SERVICE MODE:

Note:

The image system data of RCUT-BDRV is different by each image format.
The PAL value is indicated in the table.
Never adjust H.POS and V.POS except PAL/WIDE mode.

Item	Name of adjustment
RCUT	R CUT OFF
GCUT	G CUT OFF
BCUT	B CUT OFF
RDRV	R DRIVE
GDRV	G DRIVE
BDRV	B DRIVE
BRTC	BRIGHTNESS CENTER
COLC	COLOR CENTER
UVTT	BASE BAND TINT
CNTX	CONTRAST MAX
VOLUX	MAX VOLUME LIMITED
PLLW0	PLL WAIT TIME
PLLW1	PLL WAIT TIME
PLLW2	PLL WAIT TIME
PLLW3	PLL WAIT TIME
PLLW4	PLL WAIT TIME
PLLW5	PLL WAIT TIME
OPT1	TV SET OPTION 1

OPT2	TV SET OPTION 2
OPT3	TV SET OPTION 3
OPT4	TV SET OPTION 4 (PANEL OPT DATA FOR VENDOR)
OPT5	TV SET OPTION 5 (PANEL OPT DATA FOR SIZE)
OPT6	TV SET OPTION 6 (HOTEL MODE)
OPT7	TV SET OPTION 7 (HOTEL MODE)
OPT8	TV SET OPTION 8 (HOTEL MODE)
TVOP	TV SET OPTION
ID	MODEL ID
BDWID	BORDER WIDTH FOR EXACT SCAN
BDHIT	BORDER HEIGHT FOR EXACT SCAN
FPLG	MASK_ENABLE (SD/HD)
FPLG2	Channel LOGO Vector Clip SW (SD)
FPLG3	Channel LOGO Vector Clip SW (HD)

Factory preset data will be loaded after setting Model ID data.
(Refer to Initialization of Memory Data of QA02 and setting data of signal board.)

Adjusting the Data

Pressing of VOLUME ◿ +/- button will change the value of data in the range from 00H to FFH. The variable range depends on the adjusting item.

I2C Bus Off

Turn off I2C communication between IC700 and IC400.

1) Press and hold the CALL button on the remote control, then press the Volume ◿ + button on the TV.

2) Display "BUS Off" OSD.

3) I2C communication turned off.

Note:

To return Bus on status, press and hold the CALL button on the remote control, then press the Volume ◿ + button on the TV again. TV will be turned off and automatically turned on, then status will be Bus On.

Setting TVOP

Enter to service mode and select menu of TVOP by pressing P▲ or P▼ during display of adjustment menu. After selecting TVOP, press ◿ + or ◿ - to set I2C check function to disable or enable as below.

TVOP	FUNCTION DESCRIPTION	1	0 (Normal)
D5 (bit5)	I2C check between IC700 and IC400. (WDT)	Disable	Enable

Setting Panel Option Data

Panel option data is subject to OP4 and OP5.
Enter to service mode and select menu of OPT4 or OPT5 by pressing P▲ or P▼ during display of adjustment menu. After selecting OPT4 or OPT5, press ◿ + or ◿ - to set OPT4 or OPT5 value as table below.

Panel option data

Series		Model name	Panel vendor	OPT4 value	OPT5 value
XF350	EU/UK Digital/Ready	40XF350P/351P/355D/356D	SAMSUNG	0x86	0x0F
		46XF350P/351P/355D/356D	SAMSUNG	0X86	0X0A

OP4

Ex. OPT4 value 0x05 indicates that panel vendor is AUO AMVA.

		OPT4							
		D7 (bit7)	**D6 (bit6)**	**D5 (bit5)**	**D4 (bit4)**	**D3 (bit3)**	**D2 (bit2)**	**D1 (bit1)**	**D0 (bit0)**
Panel vendor	LPL	-	-	-	-	0	0	0	1
	SHP	-	-	-	-	0	0	1	0
	CMO	-	-	-	-	0	0	1	1
	AUO PMVA	-	-	-	-	0	1	0	0
	AUO AMVA	-	-	-	-	0	1	0	1
	SAMSUNG	-	-	-	-	0	1	1	0
	IPS	-	-	-	-	0	1	1	1
Panel Resolution	Full HD	1	-	-	-	-	-	-	-
	WXGA	0	-	-	-	-	-	-	-
Panel 100Hz	On	-	1	-	-	-	-	-	-
	Off	-	0	-	-	-	-	-	-

OP5

Ex. OPT5 value 0x06 indicates that panel size is 37.

		OPT5							
		D7 (bit7)	**D6 (bit6)**	**D5 (bit5)**	**D4 (bit4)**	**D3 (bit3)**	**D2 (bit2)**	**D1 (bit1)**	**D0 (bit0)**
Size	37	-	-	-	-	0	1	1	0
	42	-	-	-	-	0	1	1	1
	47	-	-	-	-	1	0	0	0
	52	-	-	-	-	1	0	1	1
	57	-	-	-	-	1	1	0	1

Convert from Bit (Binary) to Hex

The table for converting from bit (D7-D0) to hex (0x**).

		BIT (Binary)			
High nibble		**D7**	**D6**	**D5**	**D4**
Low nibble		**D3**	**D2**	**D1**	**D0**
HEX	**0**	0	0	0	0
	1	0	0	0	**1**
	2	0	0	**1**	0
	3	0	0	**1**	**1**
	4	0	**1**	0	0
	5	0	**1**	0	**1**
	6	0	**1**	**1**	0
	7	0	**1**	**1**	**1**
	8	**1**	0	0	0
	9	**1**	0	0	**1**
	A	**1**	0	**1**	0
	B	**1**	0	**1**	**1**
	C	**1**	**1**	0	0
	D	**1**	**1**	0	**1**
	E	**1**	**1**	**1**	0
	F	**1**	**1**	**1**	**1**

E.g. If Bit D7-0 = 0**1**0**1** **1**0**1**0, Hex data is 0x**5A**.

Exit from Service Mode

Pressing POWER button to turn off the TV once.

Initialization of Memory Data of QA02 and Setting Data of Signal Unit

After replacing QA02 or signal board, the following initialization is required.

CAUTION: Never attempt to initialize the data unless QA02 has been replaced.
Whenever using new signal board to the set, setting the Model ID data according to Panel option data.

1) Enter the service mode.

2) Select menu of ID by pressing P▲ or P▼ during display of adjustment menu in the service mode.

3) Change ID data into MODEL ID to initialize by pressing ◿ + or ◿ -, refer to table below.

4) Press and hold the CALL button on the remote control, then press the CHANNEL ▲ button on the TV.

5) Initialization progress dialog including model name and panel vendor is shown. Progress status is "WRITING".

6) Progress status is changed "OK" and power cycle (automatically). Then QA02 initialization has been completed.

7) Enter the service mode and select version check mode. Confirm if model name and model id set is correct. If not, repeat steps 1) to 6).
   Note:
   In case initialization by setting wrong MODEL ID is done, there is a possibility of abnormal display.

8) Set I2C check function of TVOP to enable.

9) Check the picture carefully. If necessary, adjust any adjustment item above. Perform "Auto tune" on the owner's manual.

MODEL ID (HEX)	Model name	Panel vendor

0x01	40XF350P/351P	SAMSUNG
0x02	46XF350P/351P	SAMSUNG
0x03	40XF355D/356D	SAMSUNG
0x04	46XF355D/356D	SAMSUNG
0x05		
0x06		
0x07		
0x08		
0x09		
0x10		
0x11		
0x12		
0x13		
0x14		
0x15		
0x16		
0x17		
0x18		
0x19		
0x20		
0x21		
0x22		
0x23		
0x24		
0x25		
0x26		
0x27		
0x28		
0x29		
0x30		
0x31		

0x32		
0x33		

Initializing Data setting flowchart after replacing the Signal Unit

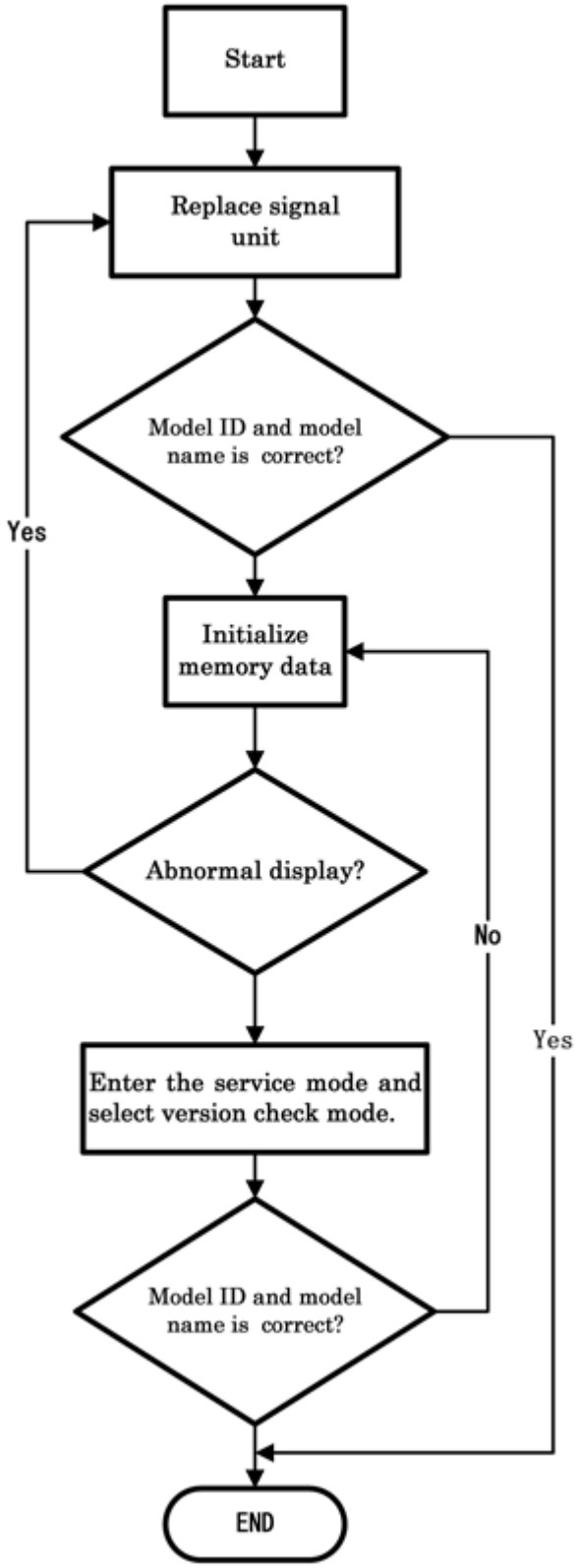
Start
Replace signal unit
Model ID and model name is correct?
Yes
Initialize memory data
Abnormal display?
No
Yes
Enter the service mode and select version check mode.
Model ID and model name is correct?
END

Test Signal Selection

Every pressing of button on the remote control changes the built-in test patterns on screen as described below in Service Mode.

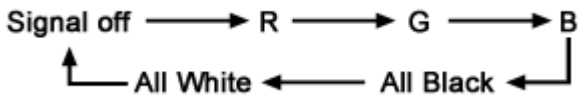

Picture	Signal
	Red raster
	Green raster
	Blue raster
	All Black
	All White

Self Diagnostic Function

1. Press "9" button on remote control during display of adjustment menu in the service mode. The diagnosis will begin to check if interface among IC's is executed properly.

2. During diagnosis, the following displays are shown.

* Self check display and Item are subject to the models.

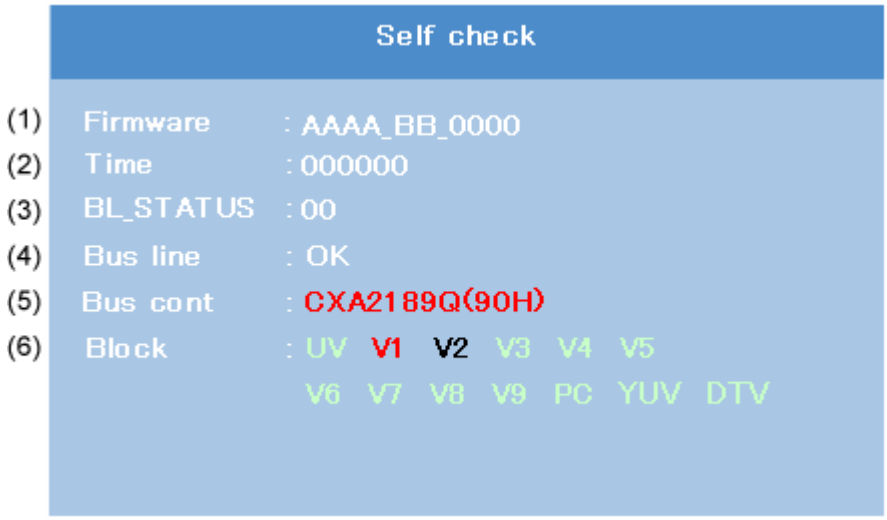

(1) Firmware :
Version information of microprocessor
Series name (AAAA) and market area (BB) and software program version (0000)

(2) Time : Total hour of turn the TV on. (Unit : H)

(3) BL_STATUS :
Counter for saving BackLight on error.
This value is counted till 99 (Decimal).

(4) Bus line : -- "OK" is normal
SCL-GND (Red indication) : SCL-GND short circuit
SDA-GND (Red indication) : SDA-GND short circuit
SCL-SDA (Red indication) : SCL-SDA short circuit

(5) Bus cont : --- "OK" is normal.
NG is abnormal (Red indication).
When the abnormal status is detected, type name of semiconductor is indicated in red colour.

(6) Block
UV : TV reception mode

V1 - V9 : VIDEO 1-9 input mode
PC : PC mode
YUV : YUV mode
DTV : DTV mode

UV	RF
V1	1 (SCART (FULL))
V2	2 (SCART (FULL))
V3	3 (Component/Composite/S)
V4	HDMI1
V5	HDMI2
V6	HDMI3
V7	--
V8	--
V9	--
PC	PC
YUV	--
DTV	DTV (Digital Only)

Version Check Mode

1. Press "9" button twice on remote control during display of adjustment menu in the service mode.
   The version of main MPU will be checked.

2. During Version Check, the following displays are shown.

* Version check display and Item are subject to the models.

	Version check					
(1)	MAIN MPU	: AAAA_BB_0000(C00)				
(2)	EEPROM	: 00(MODEL ID = 00)				
(3)	SUB MPU	: 00(NO RTC)/00(RTC)				
(4)	OPTION	: 00 11 22 33 44 55 66 77 88				
(5)	HDMI EDID	: CH1:OK CH2:OK CH3:OK				
(6)	DB SW Ver	: 0.00				
(7)	DB MW Ver	: 0.00/0.00				
(8)	A/D Adjust	:	COMP	PC	NTSC	PAL
		MAIN	OK	NG	OK	NG
		SUB	–	–	OK	NG
(9)	100Hz/120Hz	: 0000				
(10)	DRMA0000-REV00					
(11)	12345678	MODELNAME	DDD-00(EEE)			
		(12)	(13)			

(1) MAIN MPU :

Version information of microprocessor

Series name and Code Program Version (4 figure number) and OSD Version (2 figure number).

(2) EEPROM :

Version information of EEPROM : Display 1 byte data.

(3) SUB MPU :

Version information of SUB MPU : Display 1 byte data.

(4) OPTION :

Option information : Display six numbers of 1 byte data.

Left side means QF01 (for AV-LINK) micon software version.

Right side means QA01 (for CEC) micon software version. (Only CEC model)

(5) HDMI EDID :

EDID data check item. Display channel numbers depend on HDMI input numbers.

OK : EDID data is enable.

NG : EDID data is disable.

(6) SW Ver

Version information of DB software as Toshiba release. (Only digital model.)

(7) MW Ver

Left side is Application and UI version information of DB software. (Only digital model.)

Right side is Firmware (Driver) version information of DB software. (Only digital model.)

(8) A/D Adjust

A/D adjustment item.

--MAIN : It's enable only in double Window model. A/D adjustment status of main picture.

--SUB : It's enable only in double Window model. A/D adjustment status of sub picture.

--COMP : Component input

--PC : PC input

--NTSC : NTSC (60 Hz) SD signal (composite input).

--PAL : PAL (50 Hz) SD signal (composite input).

--OK : A/D adjustment set correctly.

--NG : A/D adjustment set incorrect.

-- : A/D adjustment is not needed. Because its picture format isn't used.

(9) 100 Hz FPGA Software Version

It's enable only in 100 Hz drive panel model.

(10) Memory Data Version

Version information of EEPROM.

DRMA**** means model number of EEPROM.

REV** means version of EEPROM.

(11) CD number

CD information (ascii code). : Display 4 byte data.

(12) Model Name

Model name information (ascii code). : Display 7 byte data.

(13) LCD Panel Vendor information display

The following Panel Vender (DDD) and screen size (00) and resolution (EEE) are displayed.

Example : AUO-32 (1080p) indicates that Vender is AUO and Screen Size is 32 inch and Full HD panel.

Status Check Mode

1. Press "9" button thrice on remote control during display of adjustment menu in the service mode.
   The status of this model will be checked.

2. During Status Check, the following displays are shown.

* Status check display and Item are subject to the models.

	Status check	
(1)	MAIN	: ***** ***** *****
(2)	MAIN FORMAT	: 1080i-60
(3)	MAIN PLL	: 00 11 22 33 44
(4)	SUB	: ***** ***** *****
(5)	SUB FORMAT	: 576i
(6)	SUB PLL	: 00 11 22 33 44
(7)	SCREEN SIZE	: Super live
(8)	OTHER STATUS	: 0000 0000 0000

(1) MAIN :
Main source information :
Display RF position number (0 - 99) on the main screen, or Input Source (EXT1/2/3/HDMI etc.)

(2) MAIN FORMAT :
Display Video and PC format information

(3) MAIN PLL :
Main PLL information : Display 1 byte data at five.

(4) SUB :
Sub source information :
Display RF position number (0 - 99) on the Sub screen, or Input Source (EXT1/2/3/HDMI etc.)
This item displays only Double window model.

(5) SUB FORMAT :

Display Video and PC format information

This item displays only Double window model.

(6) SUB PLL :

Sub PLL information : Display 1 byte data at five.

This item displays only Double window model.

(7) SCREEN SIZE :

Display the screen size as follows.

Exact Scan
Wide
Super Live 2
Cinema 2
4:3
Super Live 1
Cinema 1
Subtitle
14:9

Note:

Exact Scan is shown only for 1080p panel model with video input mode except pc.

(8) OTHER STATUS :

Other status information : Display three numbers of 2 byte data.

Setting Hotel Mode

Enter to service mode and select Hotel Mode menu by pressing P▲ or P▼.
After selecting Hotel Mode, press ◿+ to enter details setting in Hotel Mode.

To select menu, press P▲ or P▼ and press OK to enter the adjustment menu of table bellow.
To move the cursor in the adjustment, press ◿+ or ◿-.

1. By pressing P▲ or P▼, OPT2 setting will change the value either 1 or 0 on selected items as follows;

OP2

OPT2	FUNCTION DESCRIPTION	1	0 (Normal)
D7 (bit7)	- (no use)	-	-
D6 (bit6)	- (no use)	-	-
D5 (bit5)	FRONT Key	Disable	Enable
D4 (bit4)	All keys except input selector key (Video/TV)	Disable	Enable
D3 (bit3)	User remote control operation	Disable (Service mode and Supere User mode may possible to setting only)	Enable
D2 (bit2)	Disable SET UP MENU except language. (tuning SETUP MENU)	Disable (Display the language only)	Enable
D1 (bit1)	Disable SETUP MENU	Disable	Enable
D0 (bit0)	HOTEL Mode	On (Enable the setting of D1 from to D7)	Off (Normal)

VOLUX

Set VOLUX as following.

1) Set speaker volume to 100. (Any value is OK, but 100 is better to check sound level.)

2) Down value of VOLUX until finding suitable sound volume level.

VOLUX	FUNCTION DESCRIPTION	1	0 (Normal)
D7 (bit7) ~ D0 (bit0)	Max Limiter of Volume Control	0x00 ~ 0x7F (Normal: 0x7C)	

OP6

OPT6	FUNCTION DESCRIPTION	1	0 (Normal)

D7 (bit7)	Enable mode that POS or VIDEO program number will be appeared in forced when turn ON the main power	Enable	Disable
D6 (bit6) ~ D0 (bit0)	POS or VIDEO program number	0 ~ 127 [decimal] (Normal: 0) POS number: 0 ~ 99 VIDEO number: 100 ~ 127 (DTV = 100, VIDEO = 101, VIDEO = 102..) 100 is used as ATV when DTV option is disable.	

OP7

OPT7	FUNCTION DESCRIPTION	1	0 (Normal)
D7 (bit7)	Enable mode that speaker volume will be set in forced when turn ON the main power	Enable	Disable
D6 (bit6) ~ D0 (bit0)	Forced speaker volume	0 ~ 100 [decimal] (Normal: 0) Value above 100 is no effect.	

OP8

OPT8	FUNCTION DESCRIPTION	1	0 (Normal)
D7 (bit7) ~ D3 (bit3)	- (no use)	-	-
D2 (bit2)	Enable mode that picture mode will be set in forced when turn ON the main power	Enable (Display the language only)	Disable
D1 (bit1) ~ D0 (bit0)	Forced picture mode	0 [dec]: Dynamic (mode-1) (Normal) 1 [dec]: Standard (mode-2) 2 [dec]: Mild (mode-3) 3 [dec]: Memory (mode-M)	

LED Indication

The Green and Red LEDs on the TV (at the bottom center of the TV) indicate the TV's status, as described below.

- Red ON (solid) and Green OFF = The TV power cord is plugged in.
- Green ON (solid) and Red ON = The On timer is operating.

	LED Indication	Condition	Solution
1	Green is OFF; Red blinks continuously at 0.5-second intervals.	Abnormal operation	Turn OFF the TV and unplug the power cord. Plug the power cord in again and turn ON the TV.
2	Green is OFF; Red blinks continuously at 1-second intervals.	Abnormal operation of BUS line.	Turn OFF the TV and unplug the power cord. Plug the power cord in again and turn ON the TV.

TECHNICAL BULLETIN

File Name Title issuing date

PANEL IDENTIFICATION

Panel Identification

If the several panels are alternatively used in the same model without amending the model name, the identification marking will be shown at the last digit of the set serial number on the specification label on the back cover.

In servicing, do not alter the panel because several setting and parts are different.

Marking	Panel Vendor	Marking	Panel Vendor	Marking	Panel Vendor
A	AUO	J		S	SHARP
B		K	SAMSUNG	T	
C	CMO	L	LPL	U	
D		M		V	
E		N		W	
F		P		X	
G		Q		Y	
H	IPS	R		Z	

With this alternative use, some of key parts may differ and their combinations are indicated with the suffix marking on the location number in the part list (Miscellaneous).

e.g.

Location No.	Part No.	Description
B001A	75007869	LCD Panel, 32" LPL
B001B	75007870	LCD Panel, 32" AUO
MZ01A	75006036	LDVS Cable
MZ01B	75007893	LDVS Cable

PARTS LIST

Precaution

WARNING: BEFORE SERVICING THIS CHASSIS, READ THE "X-RAY RADIATION PRECAUTION" FOR DIRECT VIEW CTV ONLY, "SAFETY PRECAUTION" AND "PRODUCT SAFETY NOTICE" OF THIS MANUAL.

CAUTION: The international hazard symbols "⚠" in the schematic diagram and the parts list designate components which have special characteristics important for safety and should be replaced only with types identical to those in the original circuit or specified in the parts list.

The mounting position of replacements is to be identical with originals. Before replacing any of these components, read carefully the SAFETY PRECAUTION and PRODUCT SAFETY NOTICE.

Do not degrade the safety of the receiver through improper servicing.

Note:

- The part number must be used when ordering parts, in order to assist in processing, be sure to include the Model number and Description.
- The PC board assembly with ∗ mark is no longer available after the end of the production.

Abbreviations

Capacitors	CD	:	Ceramic Disk
Resistors	CF	:	Carbon film
	OMF	:	Oxide Metal Film
	PF	:	Plastic Film

CC : Carbon Composition
VR : Variable Resistor
EL : Electrolytic
MF : Metal Film
FR : Fusible Resistor

All CD and PF capacitors are ±5 %, 50 V and all resistor, ±5 %, 1/6 W unless otherwise noted.

PARTS LIST

Block : ↓Select

Location : Search

Page : 1 / 1 Jump

Parts No. : Search

PARTS LIST

Block : All Block

Location : Search

Parts No. : Search

Page : 1 / 183 Jump

Block		Location	Parts No.	Description AA S M L
U01A POWER (PE0282)	*	U01A	75009052	PWU, POWER, PE0282H1
U01A POWER (PE0282)	⚠	C801	76503507	CAPACITOR, PLASTIC FILM, AC275V 0.22UF K
U01A POWER (PE0282)	⚠	C802	76503507	CAPACITOR, PLASTIC FILM, AC275V 0.22UF K
U01A POWER (PE0282)	⚠	C803	76092567	CAPACITOR, CERAMIC DISC, AC250V E 1000PF M
U01A POWER (PE0282)	⚠	C804	76092565	CAPACITOR, CERAMIC DISC, AC250V B 470PF K
U01A POWER (PE0282)	⚠	C805	76092565	CAPACITOR, CERAMIC DISC, AC250V B 470PF K
U01A POWER (PE0282)	⚠	C806	76092567	CAPACITOR, CERAMIC DISC, AC250V E 1000PF M
U01A POWER (PE0282)	⚠	C807	76092567	CAPACITOR, CERAMIC DISC, AC250V E 1000PF M
U01A POWER (PE0282)		C811	76125035	CAPACITOR, ELECTROLYTIC, 450V 470UF M
U01A POWER (PE0282)		C812	76125040	CAPACITOR, ELECTROLYTIC, 450V 120UF M
U01A POWER (PE0282)		C814	76092281	CAPACITOR, CERAMIC DISC, AC250V E 4700PF
U01A POWER (PE0282)		C815	76092281	CAPACITOR, CERAMIC DISC, AC250V E 4700PF
U01A POWER (PE0282)		C816	76092281	CAPACITOR, CERAMIC DISC, AC250V E 4700PF
U01A POWER (PE0282)		C840	76073183	CAPACITOR, ELECTROLYTIC, 35V 220UF M
U01A POWER (PE0282)		C841	76617023	CAPACITOR, ELECTROLYTIC, 16V 330UF M
U01A POWER (PE0282)		C844	76092730	CAPACITOR, CERAMIC CHIP, 16V B 0.1UF K

PARTS LIST

Block : U01A POWER (PE0282)

Location : Search

Page : 1 / 12 Jump

Parts No. : Search

Block		Location	Parts No.	Description AA S M L
U01A POWER (PE0282)	*	U01A	75009052	PWU, POWER, PE0282H1
U01A POWER (PE0282)	⚠	C801	76503507	CAPACITOR, PLASTIC FILM, AC275V 0.22UF K
U01A POWER (PE0282)	⚠	C802	76503507	CAPACITOR, PLASTIC FILM, AC275V 0.22UF K
U01A POWER (PE0282)	⚠	C803	76092567	CAPACITOR, CERAMIC DISC, AC250V E 1000PF M
U01A POWER (PE0282)	⚠	C804	76092565	CAPACITOR, CERAMIC DISC, AC250V B 470PF K
U01A POWER (PE0282)	⚠	C805	76092565	CAPACITOR, CERAMIC DISC, AC250V B 470PF K
U01A POWER (PE0282)	⚠	C806	76092567	CAPACITOR, CERAMIC DISC, AC250V E 1000PF M
U01A POWER (PE0282)	⚠	C807	76092567	CAPACITOR, CERAMIC DISC, AC250V E 1000PF M
U01A POWER (PE0282)		C811	76125035	CAPACITOR, ELECTROLYTIC, 450V 470UF M
U01A POWER (PE0282)		C812	76125040	CAPACITOR, ELECTROLYTIC, 450V 120UF M
U01A POWER (PE0282)		C814	76092281	CAPACITOR, CERAMIC DISC, AC250V E 4700PF
U01A POWER (PE0282)		C815	76092281	CAPACITOR, CERAMIC DISC, AC250V E 4700PF
U01A POWER (PE0282)		C816	76092281	CAPACITOR, CERAMIC DISC, AC250V E 4700PF
U01A POWER (PE0282)		C840	76073183	CAPACITOR, ELECTROLYTIC, 35V 220UF M
U01A POWER (PE0282)		C841	76617023	CAPACITOR, ELECTROLYTIC, 16V 330UF M
U01A POWER (PE0282)		C844	76092730	CAPACITOR, CERAMIC CHIP, 16V B 0.1UF K

PARTS LIST

Block : U02A LOW_B (PE0428)

Location : Search

Page : 1 / 12 Jump

Parts No. : Search

Block		Location	Parts No.	Description AA S M L
U02A LOW_B (PE0428)	*	U02A	75009053	PWU, LOWB, PE0428A1
U02A LOW_B (PE0428)		CE100	76092538	CAPACITOR, CERAMIC CHIP, 10V F 1UF Z
U02A LOW_B (PE0428)		CE102	76109102	CAPACITOR, CERAMIC CHIP, 50V B 1000PF K
U02A LOW_B (PE0428)		CE150	76092179	CAPACITOR, CERAMIC CHIP, 25V B 0.22UF K
U02A LOW_B (PE0428)		CE160	76092179	CAPACITOR, CERAMIC CHIP, 25V B 0.22UF K
U02A LOW_B (PE0428)		CE161	76092179	CAPACITOR, CERAMIC CHIP, 25V B 0.22UF K
U02A LOW_B (PE0428)		CE31	76669100	CAPACITOR, ELECTROLYTIC, 50V 10UF M
U02A LOW_B (PE0428)		CE41	76668101	CAPACITOR, ELECTROLYTIC, 35V 100UF M
U02A LOW_B (PE0428)		CE501	76073189	CAPACITOR, ELECTROLYTIC, 35V 1000UF M
U02A LOW_B (PE0428)		CE502	75005709	CAPACITOR, CHIP CERA, 50V B 0.47UF K, GRM21BB31H474
U02A LOW_B (PE0428)		CE504	76617026	CAPACITOR, ELECTROLYTIC, 16V 820UF M
U02A LOW_B (PE0428)		CE505	76073183	CAPACITOR, ELECTROLYTIC, 35V 220UF M
U02A LOW_B (PE0428)		CE531	76073080	CAPACITOR, ELECTROLYTIC, 50V 0.47UF M
U02A LOW_B (PE0428)		CE532	76073089	CAPACITOR, ELECTROLYTIC, 50V 47UF M
U02A LOW_B (PE0428)		CE551	76092179	CAPACITOR, CERAMIC CHIP, 25V B 0.22UF K
U02A LOW_B (PE0428)		CE552	76073186	CAPACITOR, ELECTROLYTIC, 35V 470UF M

PARTS LIST

Block : U03A AV_TERM (PE0406)

Location : Search

Page : 1 / 54 Jump

Parts No. : Search

Block		Location	Parts No.	Description AA S M L
U03A AV_TERM (PE0406)	*	U03A	75009055	PWU, AV TERM, PE0406A1
U03A AV_TERM (PE0406)		C101	76109103	CAPACITOR, CERAMIC CHIP, 50V B 0.01UF K
U03A AV_TERM (PE0406)		C102	76762471	CAPACITOR, ELECTROLYTIC, 10V 470UF M
U03A AV_TERM (PE0406)		C103	76109102	CAPACITOR, CERAMIC CHIP, 50V B 1000PF K
U03A AV_TERM (PE0406)		C104	76797479	CAPACITOR, ELECTROLYTIC, 50V 4.7UF M
U03A AV_TERM (PE0406)		C105	76762471	CAPACITOR, ELECTROLYTIC, 10V 470UF M
U03A AV_TERM (PE0406)		C106	76109102	CAPACITOR, CERAMIC CHIP, 50V B 1000PF K
U03A AV_TERM (PE0406)		C109	76203100	CAPACITOR, ELECTORLYTIC, 16V 10UF M
U03A AV_TERM (PE0406)		C110	76109102	CAPACITOR, CERAMIC CHIP, 50V B 1000PF K
U03A AV_TERM (PE0406)		C112	76109102	CAPACITOR, CERAMIC CHIP, 50V B 1000PF K
U03A AV_TERM (PE0406)		C114	76105330	CAPACITOR, CERAMIC CHIP, 50V CH 33PF J
U03A AV_TERM (PE0406)		C115	76105330	CAPACITOR, CERAMIC CHIP, 50V CH 33PF J
U03A AV_TERM (PE0406)		C162	76105101	CAPACITOR, CERAMIC CHIP, 50V CH 100PF J
U03A AV_TERM (PE0406)		C164	76109103	CAPACITOR, CERAMIC CHIP, 50V B 0.01UF K
U03A AV_TERM (PE0406)		C190	76092730	CAPACITOR, CERAMIC CHIP, 16V B 0.1UF K
U03A AV_TERM (PE0406)		C4073	76105220	CAPACITOR, CERAMIC CHIP, 50V CH 22PF J

PARTS LIST

Block : U03B LED (PE0406)

Location : Search

Page : 1 / 2 Jump

Parts No. : Search

Block		Location	Parts No.	Description
U03B LED (PE0406)	*	U03B	75009059	PWU, LED, PE0406A2
U03B LED (PE0406)		CB02	75005969	CAPACITOR ELECTROLYTIC 10V 221M, ESRE100ETC2
U03B LED (PE0406)		CB03	76100104	CAPACITOR, CERAMIC CHIP, 25V F 0.1UF Z
U03B LED (PE0406)		CB04	76100104	CAPACITOR, CERAMIC CHIP, 25V F 0.1UF Z
U03B LED (PE0406)		CB05	75005969	CAPACITOR ELECTROLYTIC 10V 221M, ESRE100ETC2
U03B LED (PE0406)		DB01	75009054	LED, SML-020MLT T86
U03B LED (PE0406)		DB04	75009054	LED, SML-020MLT T86
U03B LED (PE0406)		DB22	23362251	DIODE, SDS511(SOD-323)
U03B LED (PE0406)		DB23	23362251	DIODE, SDS511(SOD-323)
U03B LED (PE0406)		GB04	23362042	DIODE, ZENER, UDZS6.8B
U03B LED (PE0406)		KB01	75002389	IC, GP1UE281RKVF
U03B LED (PE0406)		PA02B	23713934	CONNECTOR, 2MM 3P S WHT, B3B-PH-K-S(LF)
U03B LED (PE0406)		PA49B	23713941	CONNECTOR, B9B-PH-K-S(LF)
U03B LED (PE0406)		QB01	23205443	TRANSISTOR, 2SA1162-Y(F)
U03B LED (PE0406)		QB02	23205392	TRANSISTOR, 2SC5343UF-Y(BULK)
U03B LED (PE0406)		QB03	23205392	TRANSISTOR, 2SC5343UF-Y(BULK)

PARTS LIST

Block : U03C KEY (PE0406)

Location : Search

Page : 1 / 2 Jump

Parts No. : Search

Block		Location	Parts No.	Description AA S M L
U03C KEY (PE0406)	*	U03C	75009056	PWU, KEY, PE0406A3
U03C KEY (PE0406)		GB01	23362042	DIODE, ZENER, UDZS6.8B
U03C KEY (PE0406)		GB02	23362042	DIODE, ZENER, UDZS6.8B
U03C KEY (PE0406)		GB03	23362042	DIODE, ZENER, UDZS6.8B
U03C KEY (PE0406)		PA01B	23713938	CONNECTOR, B5B-PH-K-S(LF)
U03C KEY (PE0406)		RB71	76011683	RESISTOR, CHIP, 1/20W 68K OHM J
U03C KEY (PE0406)		RB72	76011223	RESISTOR, CHIP, 1/20W 22K OHM J
U03C KEY (PE0406)		RB73	76011103	RESISTOR, CHIP, 1/20W 10K OHM J
U03C KEY (PE0406)		RB74	76000445	CHIP JUMPER, 1608TYPE
U03C KEY (PE0406)		RB77	76011103	RESISTOR, CHIP, 1/20W 10K OHM J
U03C KEY (PE0406)		RB78	76000445	CHIP JUMPER, 1608TYPE
U03C KEY (PE0406)		RB79	76000445	CHIP JUMPER, 1608TYPE
U03C KEY (PE0406)		SA01	75007379	SWITCH, TACTILE, KSMC632A
U03C KEY (PE0406)		SA02	75007379	SWITCH, TACTILE, KSMC632A
U03C KEY (PE0406)		SA03	75007379	SWITCH, TACTILE, KSMC632A
U03C KEY (PE0406)		SA04	75007379	SWITCH, TACTILE, KSMC632A

PARTS LIST

Block : U03D ILLUMI (PE0406)

Location : Search

Page : 1 / 2 Jump

Parts No. : Search

Block		Location	Parts No.	Description AA S M L
U03D ILLUMI (PE0406)	*	U03D	75009057	PWU, ILLUMI, PE0406A4
U03D ILLUMI (PE0406)		DK01	75008572	DIODE, LED, GM5BC95251AC
U03D ILLUMI (PE0406)		DK02	75008572	DIODE, LED, GM5BC95251AC
U03D ILLUMI (PE0406)		DK03	75008572	DIODE, LED, GM5BC95251AC
U03D ILLUMI (PE0406)		DK04	75008572	DIODE, LED, GM5BC95251AC
U03D ILLUMI (PE0406)		DK05	75008572	DIODE, LED, GM5BC95251AC
U03D ILLUMI (PE0406)		PK01B	23713934	CONNECTOR, 2MM 3P S WHT, B3B-PH-K-S(LF)
U03D ILLUMI (PE0406)		QK01	23205392	TRANSISTOR, 2SC5343UF-Y(BULK)
U03D ILLUMI (PE0406)		QK02	23205392	TRANSISTOR, 2SC5343UF-Y(BULK)
U03D ILLUMI (PE0406)		QK03	23205392	TRANSISTOR, 2SC5343UF-Y(BULK)
U03D ILLUMI (PE0406)		QK04	23205392	TRANSISTOR, 2SC5343UF-Y(BULK)
U03D ILLUMI (PE0406)		QK05	23205392	TRANSISTOR, 2SC5343UF-Y(BULK)
U03D ILLUMI (PE0406)		RK01	76011101	RESISTOR, CHIP, 1/20W 100 OHM J
U03D ILLUMI (PE0406)		RK02	76011101	RESISTOR, CHIP, 1/20W 100 OHM J
U03D ILLUMI (PE0406)		RK03	76011101	RESISTOR, CHIP, 1/20W 100 OHM J
U03D ILLUMI (PE0406)		RK04	76011101	RESISTOR, CHIP, 1/20W 100 OHM J

PARTS LIST

Block : U04AS SIGNAL (PE0422)

Location : Search

Page : 1 / 57 Jump

Parts No. : Search

Block		Location	Parts No.	Description AA S M L
U04AS SIGNAL (PE0422)	*	U04AS	75009209	PC BOARD ASSY, PE0422A, SIGNAL
U04AS SIGNAL (PE0422)		C2000	V03GD0000786	CHIP CERAMIC CAPACITOR (1005)
U04AS SIGNAL (PE0422)		C2001	V03GD0000786	CHIP CERAMIC CAPACITOR (1005)
U04AS SIGNAL (PE0422)		C2002	V03GD0000786	CHIP CERAMIC CAPACITOR (1005)
U04AS SIGNAL (PE0422)		C2003	V03GD0000786	CHIP CERAMIC CAPACITOR (1005)
U04AS SIGNAL (PE0422)		C2004	V03GD0000786	CHIP CERAMIC CAPACITOR (1005)
U04AS SIGNAL (PE0422)		C2005	V03GD0000786	CHIP CERAMIC CAPACITOR (1005)
U04AS SIGNAL (PE0422)		C2006	V03GD0000716	CHIP CERAMIC CAPACITOR (1608)
U04AS SIGNAL (PE0422)		C2007	V03GD0000786	CHIP CERAMIC CAPACITOR (1005)
U04AS SIGNAL (PE0422)		C2008	V03GD0000786	CHIP CERAMIC CAPACITOR (1005)
U04AS SIGNAL (PE0422)		C2009	V03GD0000786	CHIP CERAMIC CAPACITOR (1005)
U04AS SIGNAL (PE0422)		C2010	V03GD0000786	CHIP CERAMIC CAPACITOR (1005)
U04AS SIGNAL (PE0422)		C2011	V03GD0000786	CHIP CERAMIC CAPACITOR (1005)
U04AS SIGNAL (PE0422)		C2012	V03GD0000786	CHIP CERAMIC CAPACITOR (1005)
U04AS SIGNAL (PE0422)		C2013	V03GD0000786	CHIP CERAMIC CAPACITOR (1005)
U04AS SIGNAL (PE0422)		C2014	V03GD0000786	CHIP CERAMIC CAPACITOR (1005)

PARTS LIST

Block : U05A DIGITAL (PE0284)

Location : Search

Page : 1 / 38 Jump

Parts No. : Search

Block		Location	Parts No.	Description AA S M L
U05A DIGITAL (PE0284)	*	U05A	75009070	PC BOARD ASSY, PE0284B, DIGITAL
U05A DIGITAL (PE0284)		C1401	V03GD0001170	CHIP CERAMIC CAPACITOR (2012)
U05A DIGITAL (PE0284)		C1402	V03GD0000786	CHIP CERAMIC CAPACITOR (1005)
U05A DIGITAL (PE0284)		C1403	V03GD0000786	CHIP CERAMIC CAPACITOR (1005)
U05A DIGITAL (PE0284)		C1404	V03GD0000786	CHIP CERAMIC CAPACITOR (1005)
U05A DIGITAL (PE0284)		C1406	V03GD0001318	CHIP CERAMIC CAPACITOR (2012)
U05A DIGITAL (PE0284)		C1410	V03GD0000543	CHIP CERAMIC CAPACITOR (1608)
U05A DIGITAL (PE0284)		C1411	V03GD0000549	CHIP CERAMIC CAPACITOR (1608)
U05A DIGITAL (PE0284)		C1412	V03GD0000549	CHIP CERAMIC CAPACITOR (1608)
U05A DIGITAL (PE0284)		C1413	V03GD0000582	CHIP CERAMIC CAPACITOR (1608)
U05A DIGITAL (PE0284)		C1414	V03GD0000582	CHIP CERAMIC CAPACITOR (1608)
U05A DIGITAL (PE0284)		C1415	V03GD0000582	CHIP CERAMIC CAPACITOR (1608)
U05A DIGITAL (PE0284)		C1416	V03GD0000582	CHIP CERAMIC CAPACITOR (1608)
U05A DIGITAL (PE0284)		C1417	V03GD0000582	CHIP CERAMIC CAPACITOR (1608)
U05A DIGITAL (PE0284)		C1418	V03GD0000582	CHIP CERAMIC CAPACITOR (1608)
U05A DIGITAL (PE0284)		C1419	V03GD0000582	CHIP CERAMIC CAPACITOR (1608)

PARTS LIST

Block : U06A FRONT_HDMI (PE0400)

Location : Search

Page : 1 / 5 Jump

Parts No. : Search

Block		Location	Parts No.	Description AA S M L
U06A FRONT_HDMI (PE0400)	*	U06A	75008328	PC BOARD ASSY, PE0400A, FRONT_HDMI
U06A FRONT_HDMI (PE0400)		C601	76109103	CAPACITOR, CERAMIC CHIP, 50V B 0.01UF K
U06A FRONT_HDMI (PE0400)		C602	76109103	CAPACITOR, CERAMIC CHIP, 50V B 0.01UF K
U06A FRONT_HDMI (PE0400)		C604	76109103	CAPACITOR, CERAMIC CHIP, 50V B 0.01UF K
U06A FRONT_HDMI (PE0400)		C605	76109103	CAPACITOR, CERAMIC CHIP, 50V B 0.01UF K
U06A FRONT_HDMI (PE0400)		CC11	76109102	CAPACITOR, CERAMIC CHIP, 50V B 1000PF K
U06A FRONT_HDMI (PE0400)		CC12	76109102	CAPACITOR, CERAMIC CHIP, 50V B 1000PF K
U06A FRONT_HDMI (PE0400)		CH01	76092789	CAPACITOR, CERAMIC CHIP, 6.3V B 1UF K
U06A FRONT_HDMI (PE0400)		CH02	76092730	CAPACITOR, CERAMIC CHIP, 16V B 0.1UF K
U06A FRONT_HDMI (PE0400)		CH11	76092730	CAPACITOR, CERAMIC CHIP, 16V B 0.1UF K
U06A FRONT_HDMI (PE0400)		CH14	76092789	CAPACITOR, CERAMIC CHIP, 6.3V B 1UF K
U06A FRONT_HDMI (PE0400)		CH15	76105101	CAPACITOR, CERAMIC CHIP, 50V CH 100PF J
U06A FRONT_HDMI (PE0400)		CH16	76092729	CAPACITOR, CERAMIC CHIP, 16V B 0.068UF K
U06A FRONT_HDMI (PE0400)		CH18	76092730	CAPACITOR, CERAMIC CHIP, 16V B 0.1UF K
U06A FRONT_HDMI (PE0400)		CH19	76092730	CAPACITOR, CERAMIC CHIP, 16V B 0.1UF K
U06A FRONT_HDMI (PE0400)		CH26	76092730	CAPACITOR, CERAMIC CHIP, 16V B 0.1UF K

PARTS LIST

Block : Miscellaneous

Location : Search

Parts No. : Search

Page : 1 / 2 Jump

Block		Location	Parts No.	Description
Miscellaneous	⚠	B001A	75012177	LCD PANEL, G7SEC40SNB60, LTA400HA05
Miscellaneous		H001	75008369	TUNER, ENGF7708GF
Miscellaneous		H001A	23368920	PHONO CABLE
Miscellaneous		H801	75005835	TUNER, TDQD4
Miscellaneous		MZ01A	75008703	WIRE HARNESS, 40SNB LVDS
Miscellaneous	⚠	P801	23372353	POWER CORD, UK 250V3A FL/FUSE13
Miscellaneous	⚠	P801	23372368	POWER CORD, CEE FL M5206 250V2 206 - 2.3M HOUSING
Miscellaneous		PJ22B	75002683	CONNECTOR, 1MM PITCH B TO B, 237702150K4
Miscellaneous		PJ80B	75002683	CONNECTOR, 1MM PITCH B TO B, 237702150K4
Miscellaneous		PP12	23974994	BAND, KESSOKU
Miscellaneous		W661	75007948	SPEAKER, SPK1496AO, 10MMHORN 8-OHM 10W
Miscellaneous		W662	75007949	SPEAKER, SPK1498AO, 10MMHORN 10W 8-OHM
Miscellaneous		Z001	23103840	FERRITE CORE, TFE1013
Miscellaneous		Z002	23103914	FERRITE CORE, TFE1015AD
Miscellaneous		Z200	23103840	FERRITE CORE, TFE1013
Miscellaneous		Z601	23103841	FERRITE CORE, TFE1014

PARTS LIST

Block : Accessory

Location : Search

Parts No. : Search

Page : 1 / 1 Jump

Block		Location	Parts No.	Description AA S M L
Accessory		Y101	75009094	MANUAL ENGLISH, ENGLISH MANUAL
Accessory		Y101E	75009096	MANUAL EURO, EURO MANUAL
Accessory		Y101N	75009097	MANUAL NORDIC, NORDIC MANUAL
Accessory		Y102E	75009098	MANUAL E EURO, E EURO MANUAL
Accessory		Y110	75009095	MANUAL QSUG, QSUG
Accessory		Y114	75009099	MANUAL ITALIAN SCHEMATIC, ITALIAN SCHEMATIC
Accessory		Y130	75008381	REMOCON HAND UNIT, CT-90287
Accessory		Y170	23845800	HOLDER, WIRE, NYLON66 D6.8

PARTS LIST

Block : Cabinet

Location : Search

Page : 1 / 1 Jump

Parts No. : Search

Block		Location	Parts No.	Description
Cabinet		A201	75009082	CABINET/RACK FRONT BEZEL ASSY, FRONT BEZEL ASSY
Cabinet		A370	23717267	SCREW, BITTB4X16 SBN
Cabinet		A380	23717240	SCREW, BITTB3X10SZN
Cabinet	⚠	A401	75009086	CESE/COVER/LID BACK COVER ASSY, BACK COVER ASSY
Cabinet		A412	23717214	SCREW, BITTB3X12SBN
Cabinet		A420	75009089	LEG STAND ASSEY, STAND ASSEY
Cabinet		A425	75008587	LEG STAND FIX BRACKET
Cabinet		A426	75008586	STAND BASE ASSY
Cabinet		A427	75006698	STAND PART, SCREW CAP PP 6*20 SBN
Cabinet		A428	75007209	STAND, SCREW CAP PP 5X12 SBN
Cabinet		A429	75008584	WRENCH, 45X160, STAND
Cabinet		A430	75005733	PIECE CLAMP HOLDER

CABINET

Stand Exploded View

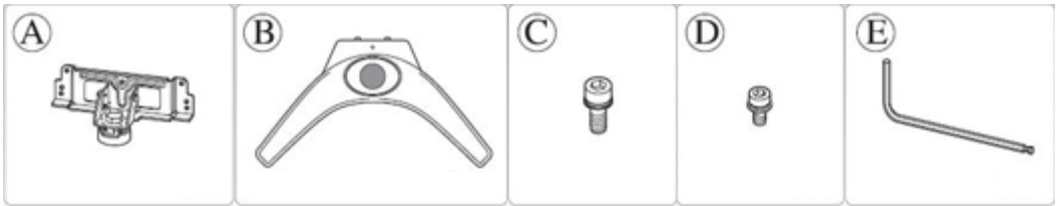

A425 A426 A427 A428 A429

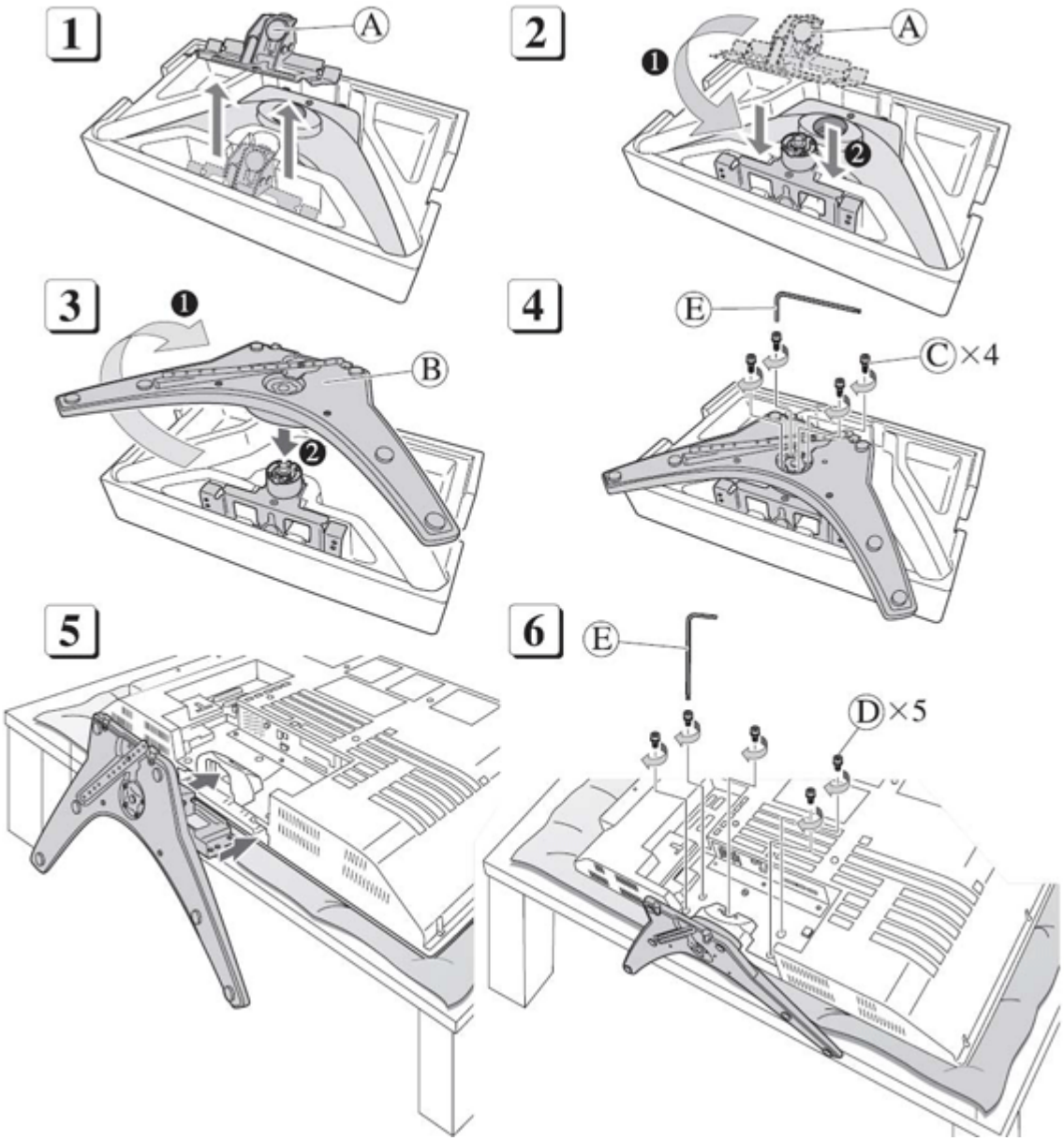
1
A
2
A
3
B
4
E
C ×4
5
6
E
D ×5

PARTS LIST

Block : Packing

Location : Search

Parts No. : Search

Page : 1 / 1 Jump

Block		Location	Parts No.	Description AA S M L
Packing		A701A	75009090	CARTON TOP CASE, TOP CASE
Packing		A701B	75009091	CARTON BOTTOM CASE, BOTTOM CASE
Packing		A702A	75009092	PAD TOP PACKING, TOP PACKING
Packing		A702B	75009093	PAD BOTTOM PACKING, BOTTOM PACKING
Packing		A705	23518043	PACKING, JOINT

FUNCTION AND OPERATION

The Remote Control

Simple at-a-glance reference of your remote control.

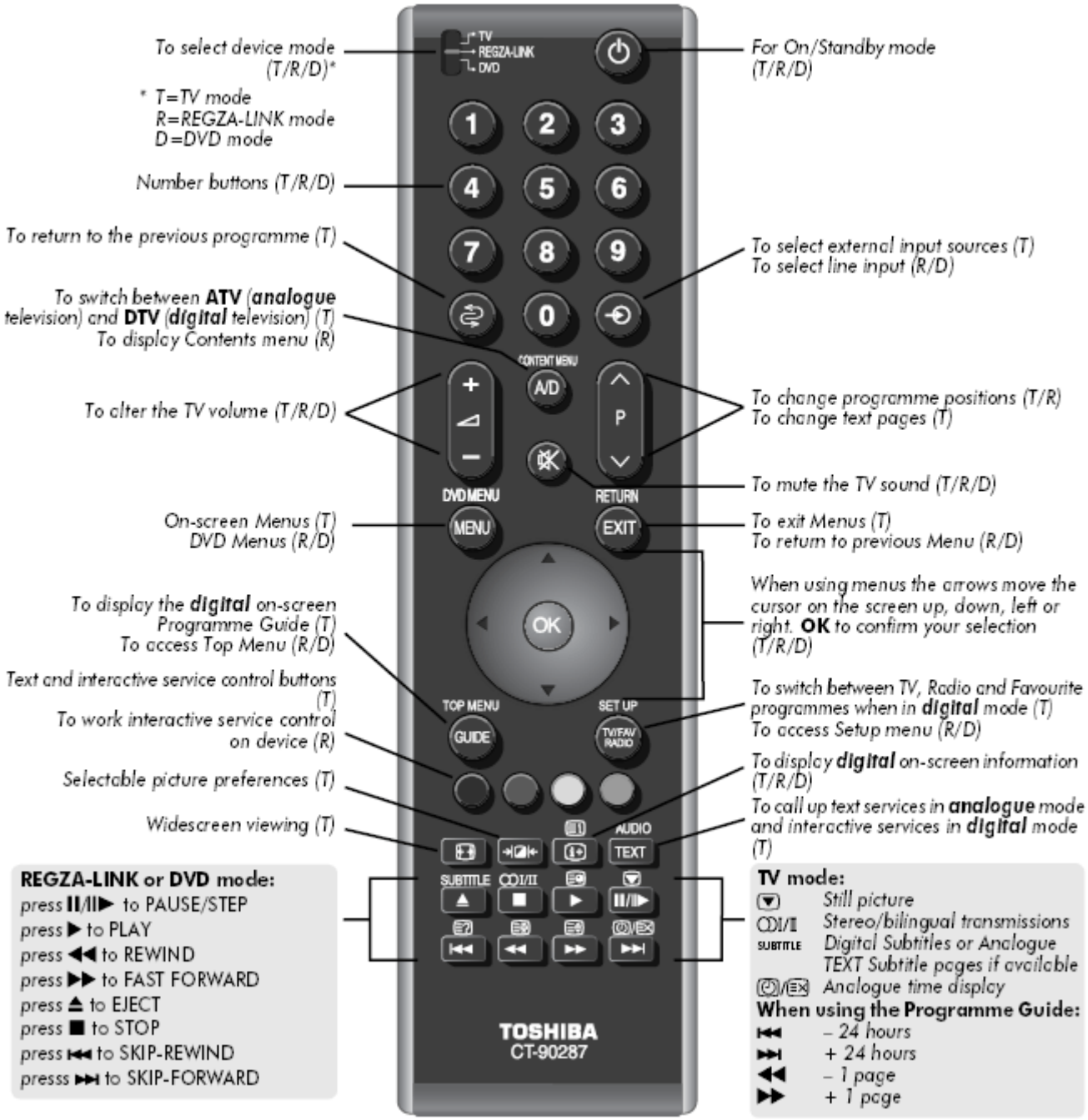

FUNCTION AND OPERATION

Controls and Input Connections

A wide variety of external equipment can be connected to the input sockets on the side of the television.
Whilst all the necessary adjustments and controls for the television are made using the remote control, the buttons on the television may be used for some functions.

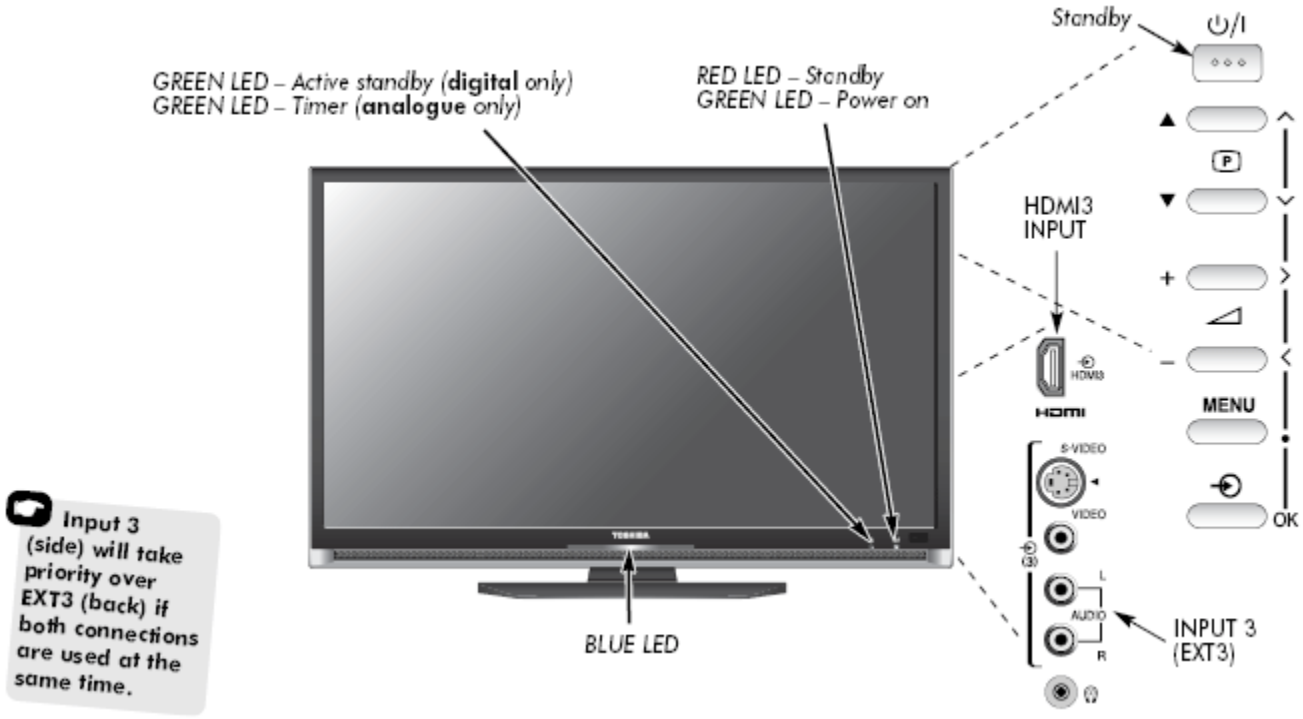

Switching On

If the RED LED is unlit check that the mains plug is connected to the power supply. If the picture does not appear press ⏻ on the remote control, it may take a few moments.

To put the television into Standby press ⏻ on the remote control, the GREEN active standby LED will appear (see *'Software Upgrade' section*) next to the RED for a few moments then disappear. To view the television press ⏻ again. The picture may take a few seconds to appear.

Using the Remote Control

Press the **MENU** button on the remote control to see the menus.

In **digital** mode the menu bar at the top of the screens will show three different topics shown in symbols. As each symbol is selected by pressing the ◀ or ▶ button on the remote control, its respective options will appear below.

In **analogue** mode the menu appears as a list of six topics. As each symbol is selected by pressing the ◀ or ▶ button on the remote control, its respective options will appear below.

To use the options press the ▲ and ▼ button on the remote control to move up and down through them and **OK**, ◀ or ▶ to select the required choice. Follow the on-screen instructions. The functions of each menu are described in detail throughout the manual.

Using the Controls and Connections

To alter the volume press – ◿ +.

To alter the programme position press ▼ Ⓟ ▲.

Press **MENU** and <, >, ∨ or ∧ to control the sound and picture options.

Press **MENU** twice to finish.

When connecting sound equipment to **EXT3**, connect the audio output of the equipment to the phono sockets on the television.

To select the Input, press ⊕ until the display shows **EXT3**. The television will automatically sense the type of signal.

Please always refer to the owner's manual of the equipment to be connected for full details.

Please note: Inserting the headphone plug will mute the sound from all speakers.

FUNCTION AND OPERATION

Tuning Digital Television for the First Time

Before switching on the television put your decoder and media recorder to **Standby** if they are connected and ensure the aerial is connected.
To set up the television use the buttons on the remote control.

1. Press the ⏻ button, the **LOCAL OPTIONS** screen will appear. This screen will appear the first time that the television is switched on and each time the television is reset.

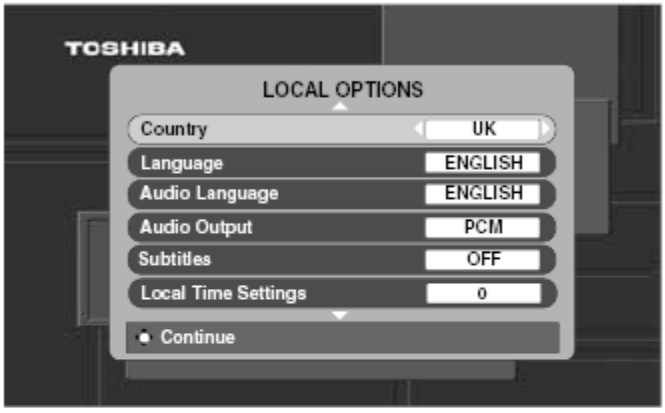

2. Press ▼ to highlight **Country** and ◀ or ▶ to select. The television will now tune the stations for your country.

3. Using ▼ highlight **Language**, then ◀ or ▶ to select.

4. Press **OK** to start tuning.

   The **AUTO TUNING** screen will appear and the television will start to search for available stations. The progress bar will move along the line.

   You must allow the television to complete the search.

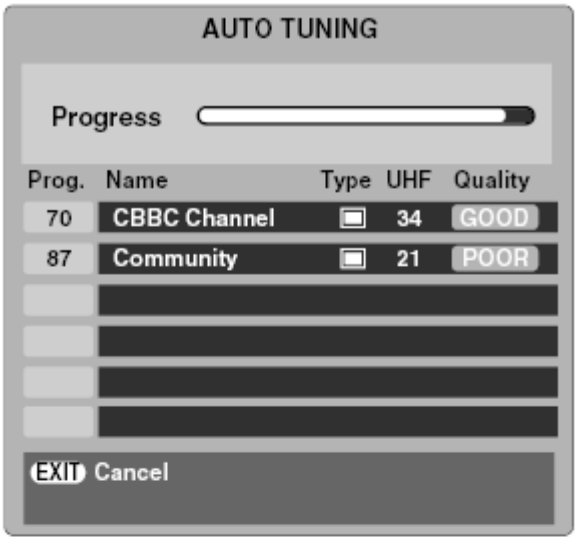

When the search is complete the television will automatically select programme one.

The **AUTO TUNING** screen will display the total number of services found.

5 Use ▼ or ▲ to move through the list to select a programme then press **OK** to view.

NOTE: The time will be set automatically by transmission but can be advanced or decreased by up to 2 hours using **Local Time Settings**.

FUNCTION AND OPERATION

Digital Auto Tuning

Note: As new services are broadcast it will be necessary to re-tune the television in order to view them.

Auto Tuning

Auto tuning *will completely re-tune the television and can be used to up date the channel list.*
It is recommended that Auto tuning is run periodically to ensure that all new services are added*. All current programmes and settings, i.e. favourites and locked programmes, will be lost.*

1. Press **MENU**, the **SETUP MENU** will appear. Use ▼ to highlight **Auto tuning**. Press **OK**.

2. A screen will appear warning that previous digital programmes and settings will be deleted. Press **OK** to continue with the **Auto tuning**.

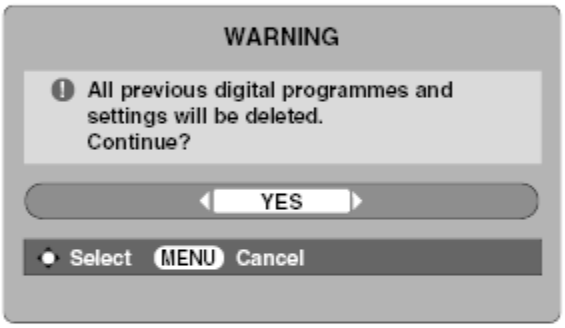

The television will start to search for all available stations.

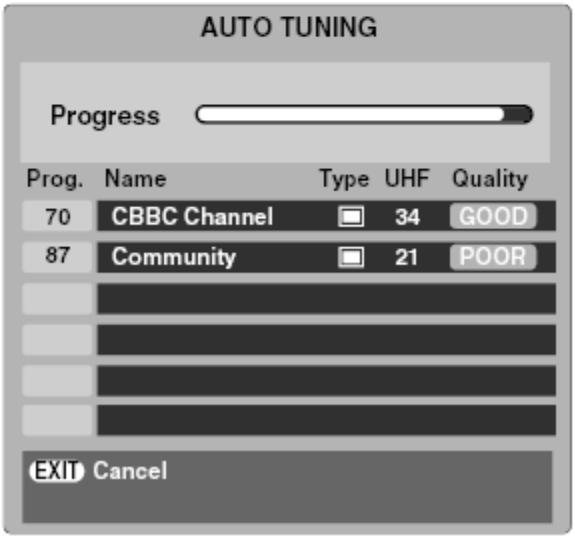

You must allow the television to complete the search.

When the search is complete the **Auto tuning** screen will display the total number of services found.

3 Use ▼ or ▲ to move through the list to select a programme then press **OK** to view.

Analogue Switch-Off

This is a **digital** television which is integrated to allow the use of both **digital** and **analogue** services. However, during the lifetime of this set it is very likely that **analogue** services will be switched off to allow for more new **digital** services.

This 'switch-off' will happen in a number of phases, which will be advertised in your area well in advance. It is recommended that at each phase the television is re-tuned to ensure that existing and new **digital** services can be viewed without disruption (*see the* 'Auto tuning' *section*).

FUNCTION AND OPERATION

Digital Programme Sorting, Manual Tuning

Note: When the television is switched off the mode being viewed at the time will automatically be selected when the television is switched back on.

Programme Sorting

1 The station order may be changed to suit personal preference. Press **MENU**, the **SETUP MENU** will appear on screen.

2 Use ▼ to move down through the list and highlight **Programmes**. Press **OK**.

3 With the list of stations now showing use ▼ or ▲ to highlight the station you want to move and press ▶.

The selected station will be moved to the right of the screen.

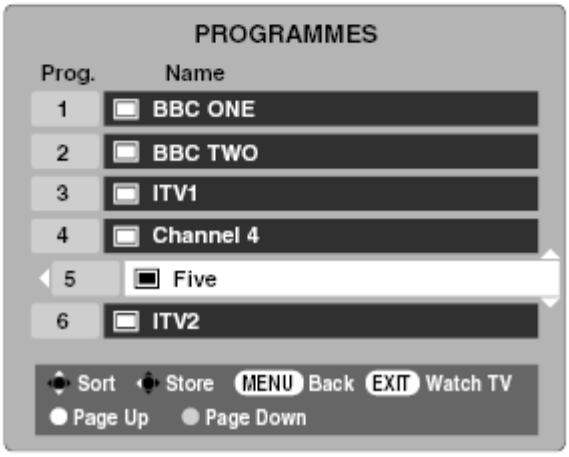

4 Use ▼ or ▲ to move through the list to your *preferred* position. As you do so the other stations will move to make room.

5 Press ◀ to store your move. Repeat as necessary, then press **EXIT**.

Manual Tuning

This feature is available for service engineers or can be used for direct channel entry if the multiplex channel is known.

1. Select **Manual tuning** from the **SETUP MENU** and press **OK**.

2. Enter the multiplex number using the number buttons and then press **OK**. The television will automatically search for that multiplex.

   When the multiplex is found any channels not currently on the programme list will be added and the programme information at the top of the screen will be updated.

3. Repeat as necessary. Press **EXIT** to finish.

FUNCTION AND OPERATION

Tuning Analogue Mode for the First Time

The **Quick Setup** feature will tune all **analogue** channels currently available in the area. To put the television into **ATV** mode press the **A/D** button.

1. Select **ATV** mode. The **Quick Setup** screen will appear.

2. Using ◀ or ▶ select your **language**, then press **OK**.
3. Then press ◀ or ▶ to select your **country**.
4. To start **Auto tuning** press **OK**.

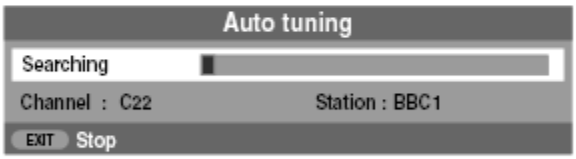

5. The search will begin for all available stations. The slide bar will move along the line as the search progresses.

You must allow the television to complete the search.

When the search is complete the television will automatically select programme position 1 and the **Manual tuning** screen will appear.

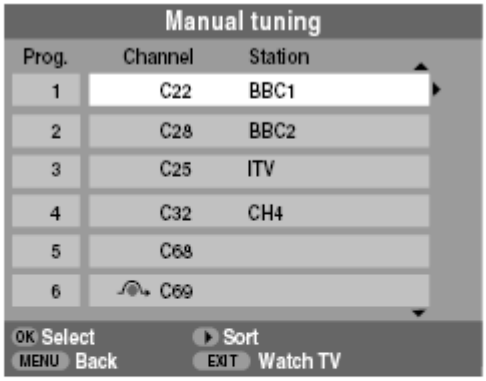

6 Use ▼ or ▲ to move through the list to select a programme then press **EXIT** to view.

The station order may be changed using the **Manual tuning** screen (*see the* **analogue** *'Sorting programme positions' section*).

FUNCTION AND OPERATION

Analogue Manual Tune

The television can be tuned-in manually using **Manual tuning**. For example: if the television cannot be connected to a media recorder/decoder with a SCART lead or to tune-in a station on another **System**.

Use ◀ and ▶ to move across the screen and select any of these Manual Tune options.

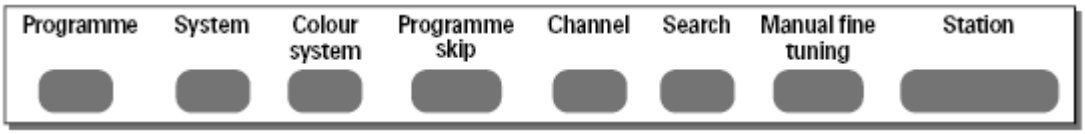

Programme	**: The number to be pressed on the remote control.**
System	**: Specific to certain areas.**
Colour system	**: Factory set to Auto, should only be changed if problems are experienced, i.e. NTSC input from external source.**
Programme skip	**: means nothing has been stored or the facility to skip the channel is ON.**
Channel	**: The channel number on which a station is being broadcast.**
Search	**: Search up and down for a signal.**
Manual fine tuning	**: Only used if interference/weak signal is experienced.**
Station	**: Station identification. Use the ▲ or ▼ and ◀ or ▶ buttons to enter up to seven characters.**

To allocate a programme position on the television for a decoder and media recorder: turn the decoder on, insert a pre-recorded film in the media recorder and press PLAY, then manually tune.

1 Press **MENU** and using ◀ or ▶ select the **SET UP** menu, with ▼ highlight **Manual tuning**, press **OK** to select.

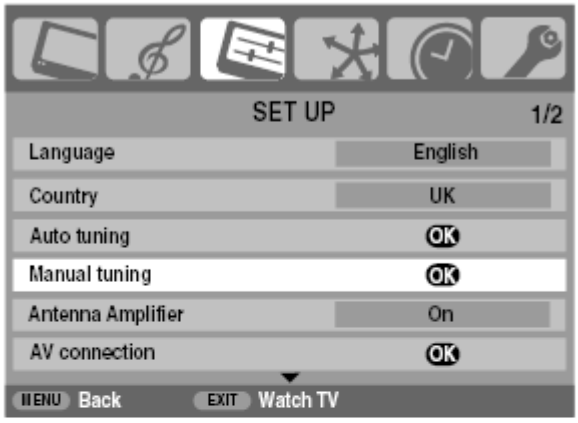

2 Use ▲ or ▼ to highlight the programme position required e.g. we suggest ***Prog. 0*** for a media recorder.

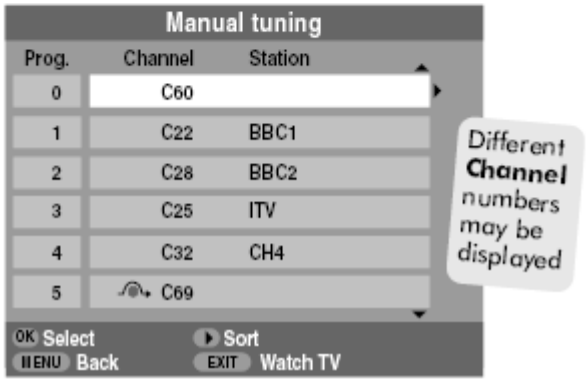

3 Press **OK** to select. If the programme is skipped, **Programme skip** must be removed before storing.

4 Press ▶ to select **System** and use ▲ or ▼ to change if required.

5 Then press ▶ to select **Search**.

6 Press ▲ or ▼ to begin the search. The search symbol will flash.

7 Each signal will show on the television, if it is not your media recorder, press ▲ or ▼ again to restart the search.

8 When your media recorder signal is found, press ▶ to move along to **Station**. With ▲, ▼, ◀ and ▶ put in the required characters, e.g. **VCR**.

9 Press **OK** to store.

10 Repeat for each ***programme position*** you want to tune or, press **MENU** to return to the list of channels and select the next number to tune.

11 Press **EXIT** when you have finished.

12 To name external equipment, e.g. DVD on EXT2, press ⊕ to select ⊕2, then select **Manual setting** from the **SET UP** menu.

13 Press ▶ to select **Label** then using ▲, ▼, ◀ and ▶ put in the required characters. Press **OK**.

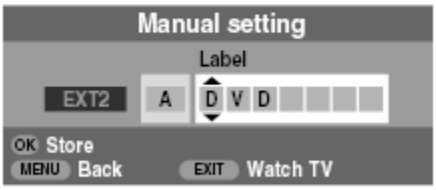

PLEASE NOTE This television has direct channel entry if the channel numbers are known.
Select the **Manual tuning** screen in ***Step 3***. Enter the **Programme number**, the **System**, then **C** for standard (terrestrial) channels or **S** for cable channels and the **Channel** number. Press **OK** to store.

SPECIFICATION

DVB-T Broadcast systems/channels		Broadcast systems/channels	
UK	UHF 21-68	PAL-I	UHF UK21-UK69
France	VHF 05-10 (VHF 01-05) UHF 21-69	PAL-B/G	UHF E21-E69 VHF E2-E12, S1-S41
Germany	VHF 05-12 UHF 21-69	SECAM-L	UHF F21-F69 VHF F1-F10, B-Q
Switzerland	VHF 05-12 UHF 21-69	SECAM-D/K	UHF R21-R69 VHF R1-R12
Italy	VHF 05-12 (D,E,F,G,H,H1,H2) UHF 21-69		
Spain	UHF 21-69		

Video Input PAL, SECAM, NTSC 3.58/4.43

External connections

EXT1	Input/Output	21-pin SCART	RGB, A/V Selectable output
EXT2	Input/Output	21-pin SCART	RGB, A/V, S-video Selectable output
EXT3	Input	Phono jacks Phono jacks	Y, P_B/C_B, P_R/C_R A/V
EXT3	Input (Side)	Phono jack Phono jacks	Video, S-video Audio L + R
HDMI 1/2	Input	HDMI™ (1080p, LIP SYNC, Deep Color, xvYCC*) *xvYCC: for ZF355D series only	
HDMI 3	Input (Side)	HDMI™ (1080p, LIP SYNC, Deep Color, xvYCC*) *xvYCC: for ZF355D series only	
PC	Input	Mini D-sub 15-pin	Analog RGB signal
PC/HDMI1 Audio		Phono jacks	Audio L + R
Digital Audio Output (S/PDIF)		Optical	
Output to Active Super Woofer		Phono jack	
Fixed Audio Output		Phono jacks	Audio L + R

Stereo		Nicam 2 carrier system
Visible Screen Size (approx.)	Model 40 46	102cm 117cm
Display		16:9
Sound output (at 10% distortion)		Main 10W + 10W
Power consumption as specified in EN60107-1 : 1997	Model 40XF 46XF	243W 291W
Standby (approx.)	Model 40XF 46XF	<1W <1W
Dimensions (approx.)	Model 40 46	63cm (H) 93cm (W) 30cm (D) 71cm (H) 107cm (W) 30cm (D) *(Height dimension includes foot stand)*
Weight (approx.)	Model 40XF 46XF	27.2kg 34.1kg
Headphone socket		3.5mm stereo
Accessories		Remote control 2 batteries (AAA, IEC R03 1.5V) Cleaning cloth (to clean the cabinet and control panel)