淘本本
TBenBen.com

S-SERIES

Zygo(D) & Zodiac(D) & Ikon

PV_Build (A01)

2008.04.02

DATE	CHANGE NO.	REV

	EE	DATE	POWER	DATE
DRAWER				
DESIGN				
CHECK				
RESPONSIBLE				

SIZE = 3 VER :
FILE NAME : XXXX-XXXXXX-XX
P/N XXXXXXXXXXXX

INVENTEC

TITLE S-SERIES - Discrete

SIZE	CODE	DOC. NUMBER	REV
A3	CS	1310A21614	A01

SHEET 1 OF 54

Table Of Contents

Page

5- DC & Battery Charger.
6- Select & Battery CONN.
7- System Power (+V3A/+V5A).
8- System Power (+V1.8/+VCCP) .
9- Graphic Power (+VDD_CORE & +VPCIE).
10- System Power (+V1.5S) .
11- CPU Power (+VCC_CORE).
12- DDR Termination Voltage(+V0.9S).
13- Power (Sleep: +V5S/+V3S/+V1.8S).
14- Power (Sequence).

Page

15- Clock Generator.
16- CPU Penryn-1.
17- CPU Penryn-2.
18- CPU Penryn-3.
19- XDP & Thermal & Fan.
20- N/B Cantiga-1.
21- N/B Cantiga-2.
22- N/B Cantiga-3.
23- N/B Cantiga-4.
24- N/B Cantiga-5.
25- N/B Cantiga-6.
26- DDR2-DIMM0.
27- DDR2-DIMM1.
28- DDR2-DAMPING.
29- VGA CONN.
30- LCM CONN.
31- S/B ICH9-1.
32- S/B ICH9-2.
33- S/B ICH9-3.
34- S/B ICH9-4.
35- S/B ICH9-5.

Page

36- 15" ODD Extend/B.
37- HDD & ODD CONN&Accelerometer.
38- USB CONN.
39- KBC & BIOS ROM.
40- Internal Keyboard & TouchPad CONN.
41- Audio CODEC & Earphone & Speaker.
42- Audio MIC & MDC CONN.
43- Giga LAN controller.
44- Magnetic & RJ45 CONN.
45- Mini Card(WLAN/Robson)/BT/UWB/Web-CAM.
46- New Card & 4 in 1 Card (SD/MMC/MS/XD).
47- LEDs & Buttons & SW/B.
48- Screws / Crack testing circuit.
49- AMD M82SE-1.
50- AMD M82SE-2.
51- AMD M82SE-3.
52- AMD M82SE-4.
53- Video RAM-1 (GDDR2).
54- Video RAM-2 (GDDR2).

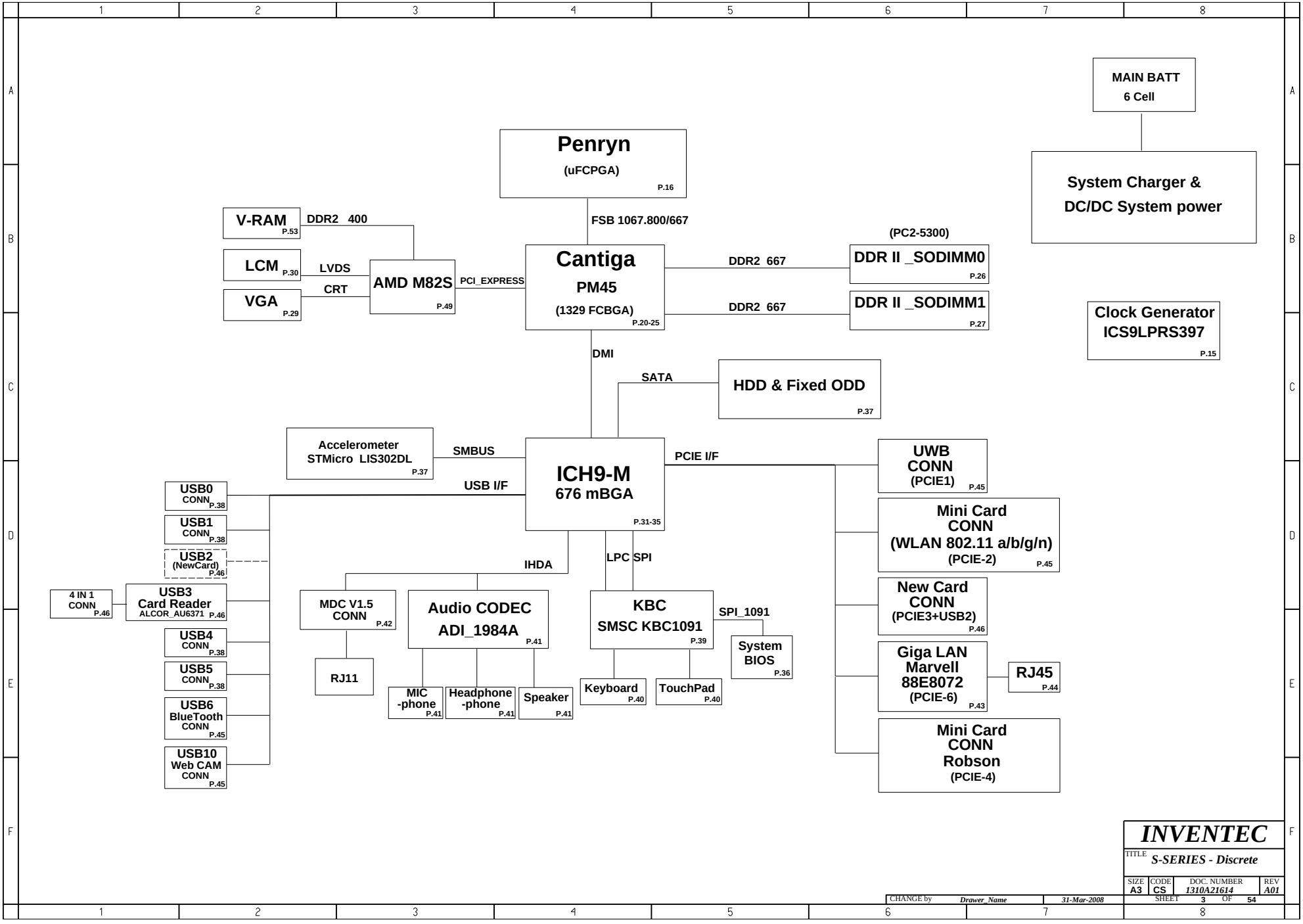

INVENTEC

TITLE S-SERIES - Discrete

SIZE	CODE	DOC. NUMBER	REV
A3	CS	1310A21614	A01

SHEET 3 OF 54

CHANGE by Drawer_Name 31-Mar-2008

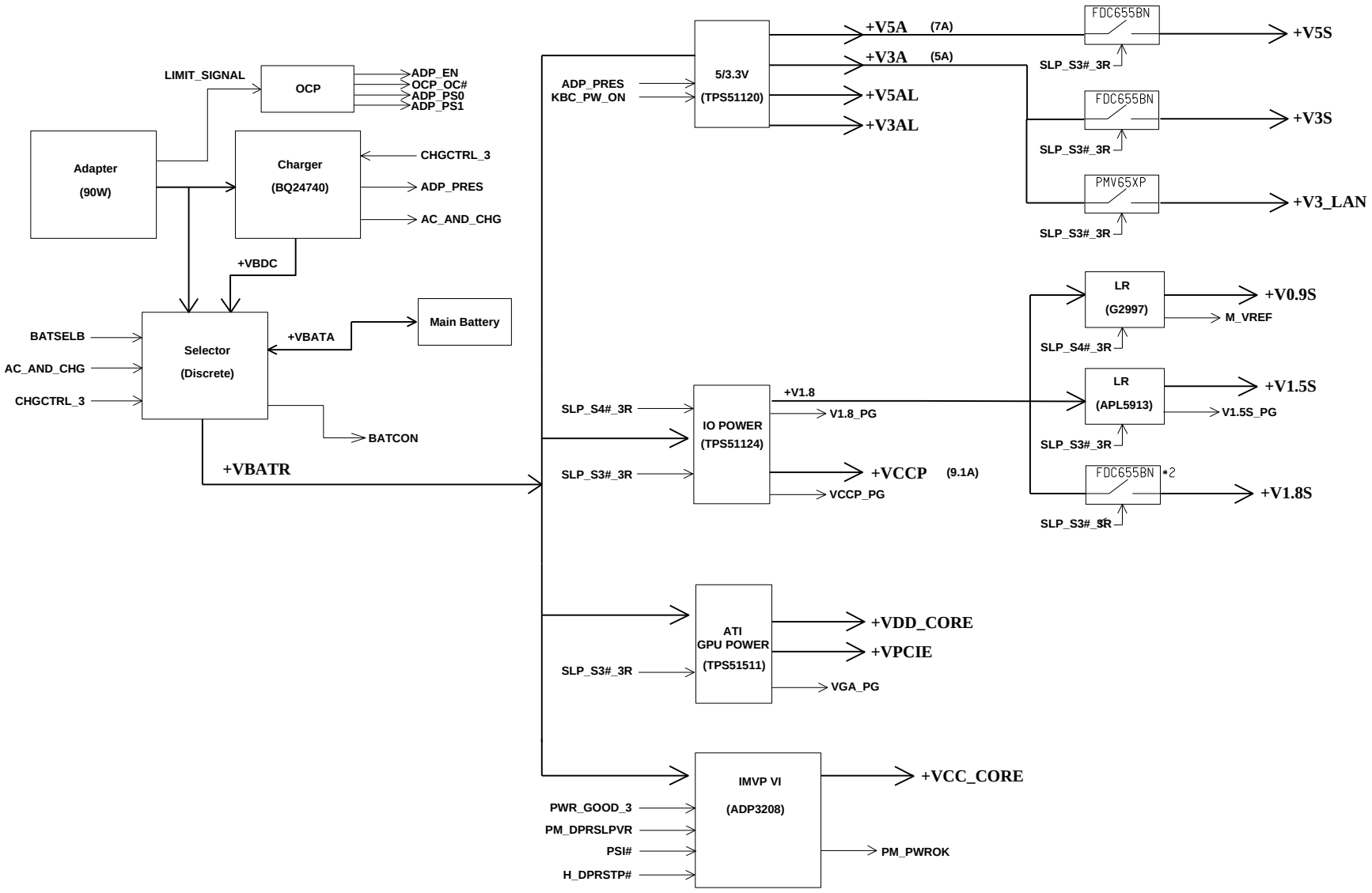

INVENTEC

TITLE S-SERIES - Discrete

SIZE	CODE	DOC. NUMBER	REV
A3	CS	1310A21614	A01

SHEET 4 OF 54

CHANGE by Drawer_Name 31-Mar-2008

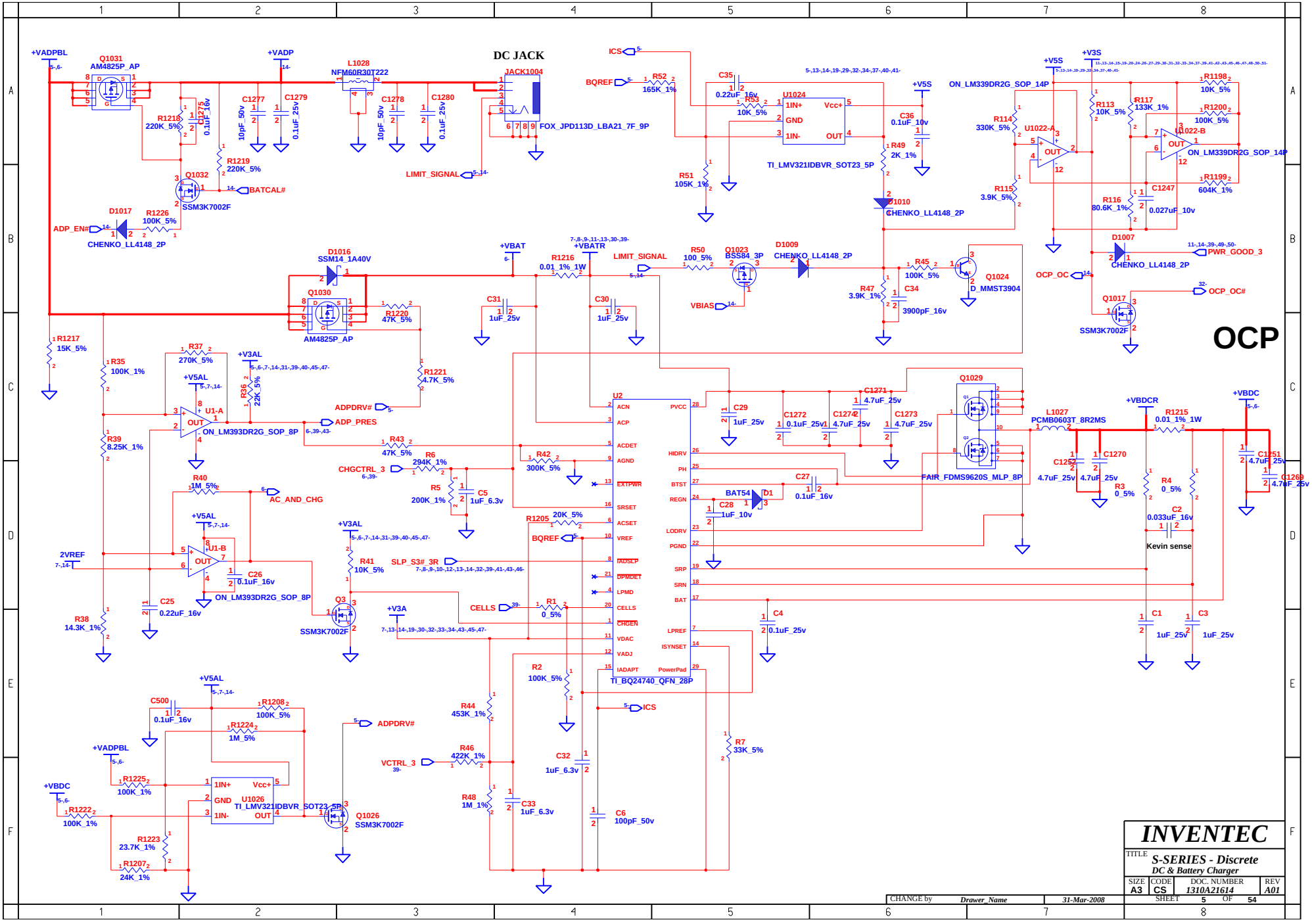
DC JACK
OCP
+VADPBL
Q1031
AM4825P_AP
+VADP
L1028
NFM60R30T222
JACK1004
FOX_JPD113D_LBA21_7F_9P
ICS
BQREF
U1024
TI_LMV321IDBVR_SOT23_5P
ON_LM339DR2G_SOP_14P
+V5S
+V3S
R1198
10K_5%
R1200
100K_5%
R1199
604K_1%
R1218
220K_5%
R1219
220K_5%
Q1032
SSM3K7002F
BATCAL#
LIMIT_SIGNAL
D1017
R1226
100K_5%
ADP_EN#
CHENKO_LL4148_2P
D1016
SSM14_1A40V
Q1030
AM4825P_AP
+VBAT
+VBATR
R1216
0.01_1%_1W
R50
100_5%
Q1023
BSS84_3P
D1009
VBIAS
R45
100K_5%
Q1024
D_MMST3904
R47
3.9K_1%
C34
3900pF_16v
D1007
PWR_GOOD_3
OCP_OC
OCP_OC#
Q1017
SSM3K7002F
R1220
47K_5%
R1221
4.7K_5%
R1217
15K_5%
R35
100K_1%
R37
270K_5%
+V3AL
+V5AL
U1-A
ON_LM393DR2G_SOP_8P
ADPDRV#
ADP_PRES
R39
8.25K_1%
R43
47K_5%
R6
294K_1%
CHGCTRL_3
R5
200K_1%
C5
1uF_6.3v
R42
300K_5%
R40
1M_5%
AC_AND_CHG
U2
TI_BQ24740_QFN_28P
Q1029
FAIR_FDMS9620S_MLP_8P
L1027
PCMB0603T_8R2MS
+VBDCR
R1215
0.01_1%_1W
+VBDC
C1251
4.7uF_25v
C1269
4.7uF_25v
C1252
4.7uF_25v
C1270
4.7uF_25v
R3
0_5%
R4
0_5%
C2
0.033uF_16v
Kevin sense
C1
1uF_25v
C3
1uF_25v
C29
1uF_25v
C1271
4.7uF_25v
C1272
0.1uF_25v
C1273
4.7uF_25v
C27
0.1uF_16v
BAT54
D1
C28
1uF_10v
C4
0.1uF_25v
2VREF
U1-B
ON_LM393DR2G_SOP_8P
C26
0.1uF_16v
C25
0.22uF_16v
R38
14.3K_1%
R41
10K_5%
SLP_S3#_3R
R1205
20K_5%
CELLS
R1
0_5%
Q3
SSM3K7002F
+V3A
R2
100K_5%
R44
453K_1%
R46
422K_1%
VCTRL_3
C32
1uF_6.3v
R48
1M_1%
C33
1uF_6.3v
C6
100pF_50v
R7
33K_5%
C500
0.1uF_16v
R1208
100K_5%
R1224
1M_5%
R1225
100K_1%
R1222
100K_1%
R1223
23.7K_1%
R1207
24K_1%
U1026
TI_LMV321IDBVR_SOT23_5P
Q1026
SSM3K7002F
INVENTEC
TITLE
S-SERIES - Discrete
DC & Battery Charger
SIZE A3
CODE CS
DOC. NUMBER 1310A21614
REV A01
SHEET 5 OF 54
CHANGE by Drawer_Name
31-Mar-2008

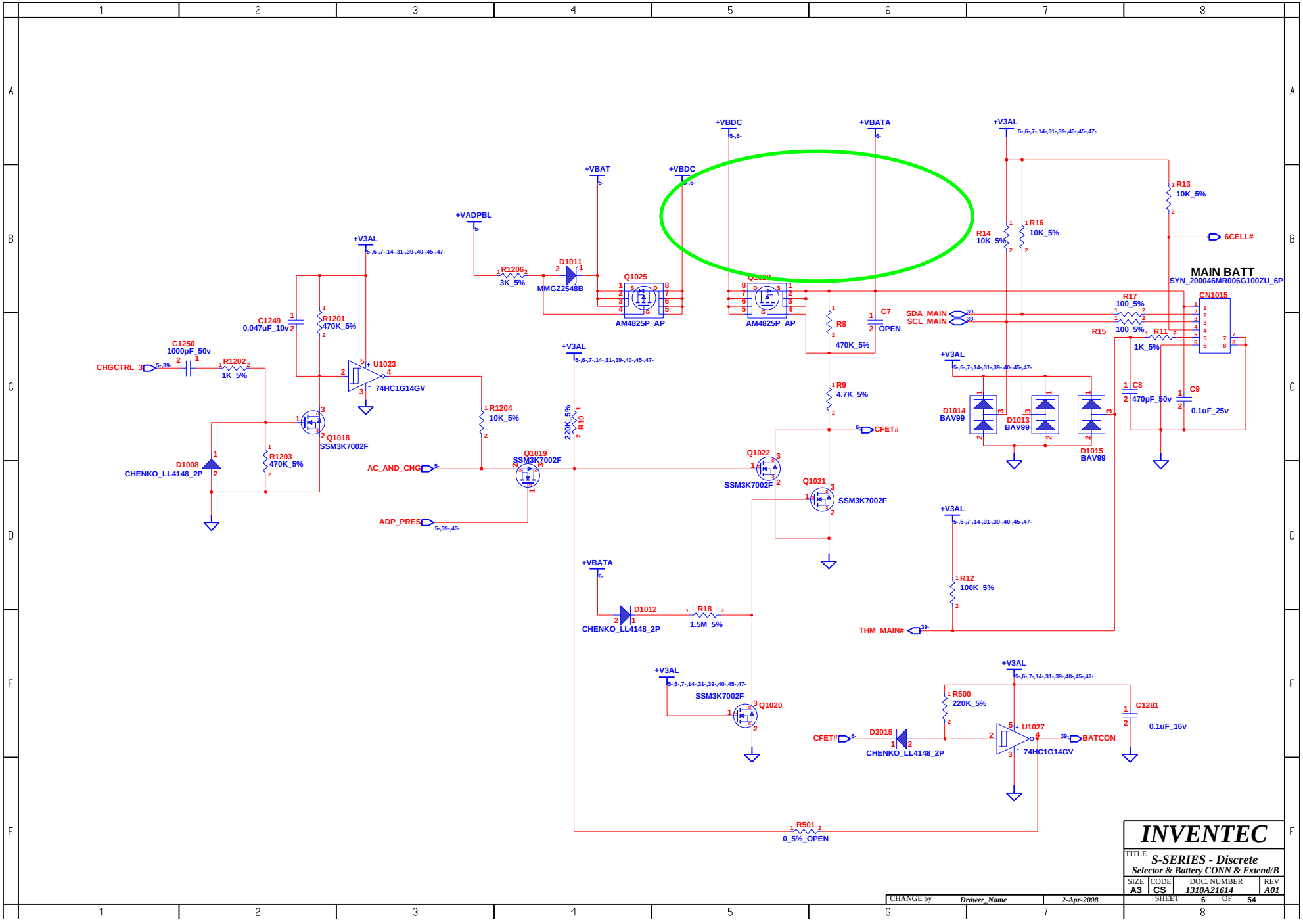
+VBDC
+VBATA
+V3AL
+VBAT
+VADPBL
R13
10K_5%
6CELL#
R14
10K_5%
R16
10K_5%
MAIN BATT
SYN_200046MR006G100ZU_6P
CN1015
R17
100_5%
R15
100_5%
R11
1K_5%
SDA_MAIN
SCL_MAIN
C8
470pF_50v
C9
0.1uF_25v
D1014
BAV99
D1013
BAV99
D1015
BAV99
R1206
3K_5%
D1011
MMGZ2548B
Q1025
AM4825P_AP
Q1020
AM4825P_AP
R8
470K_5%
C7
OPEN
R9
4.7K_5%
CFET#
C1249
0.047uF_10v
R1201
470K_5%
U1023
74HC1G14GV
C1250
1000pF_50v
CHGCTRL_3
R1202
1K_5%
Q1018
SSM3K7002F
D1008
CHENKO_LL4148_2P
R1203
470K_5%
R1204
10K_5%
AC_AND_CHG
Q1019
SSM3K7002F
ADP_PRES
220K_5%
R10
Q1022
SSM3K7002F
Q1021
SSM3K7002F
R12
100K_5%
THM_MAIN#
D1012
CHENKO_LL4148_2P
R18
1.5M_5%
Q1020
SSM3K7002F
R500
220K_5%
D2015
CHENKO_LL4148_2P
U1027
74HC1G14GV
BATCON
C1281
0.1uF_16v
R501
0_5%_OPEN
INVENTEC
TITLE
S-SERIES - Discrete
Selector & Battery CONN & Extend/B
SIZE A3
CODE CS
DOC. NUMBER 1310A21614
REV A01
CHANGE by Drawer_Name
2-Apr-2008
SHEET 6 OF 54

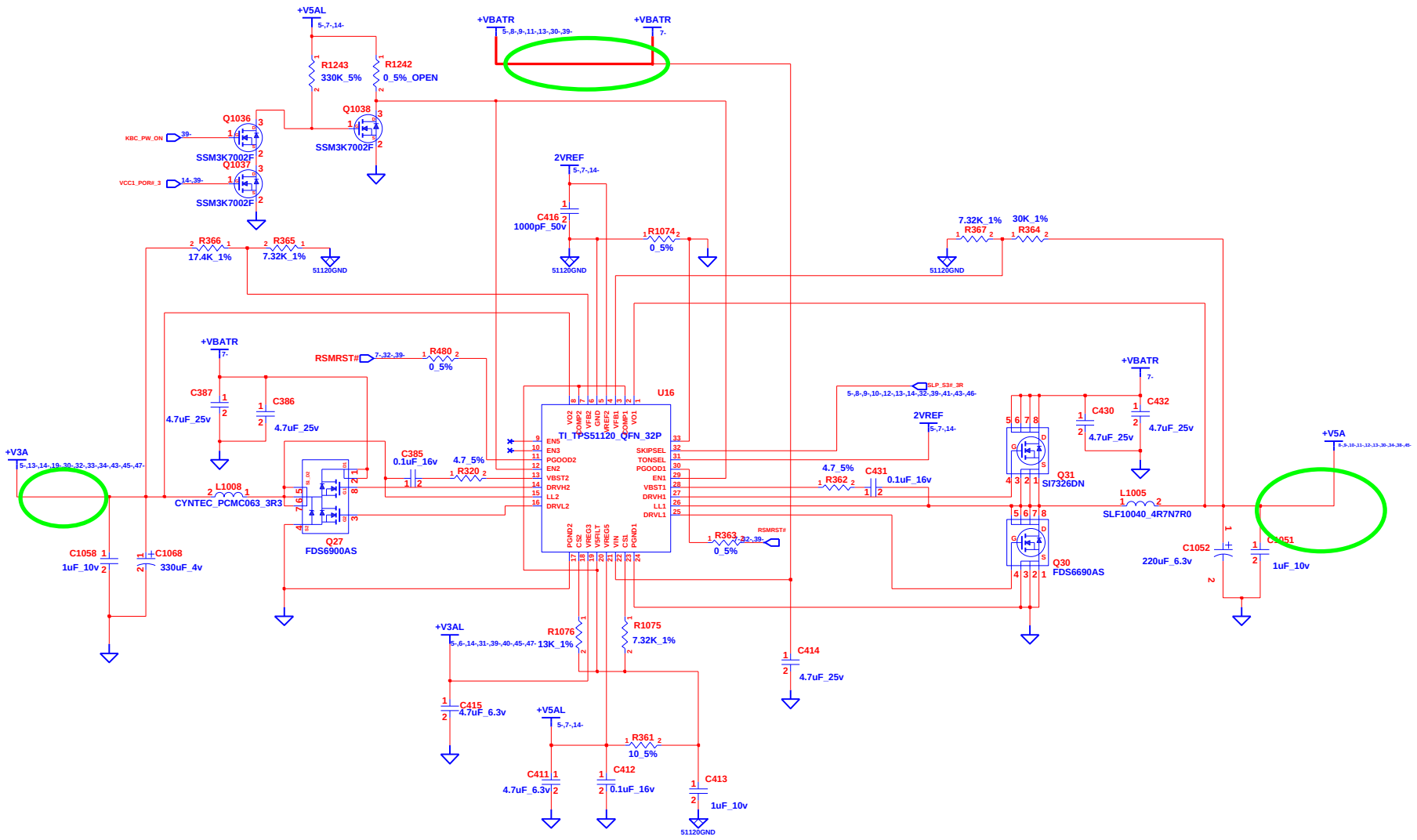

CHANGE by	Drawer_Name	31-Mar-2008	

INVENTEC

TITLE: *S-SERIES - Discrete*
System Power(+V5A/+V3A)

SIZE	CODE	DOC. NUMBER	REV
A3	CS	1310A21614	A01

SHEET 7 OF 54

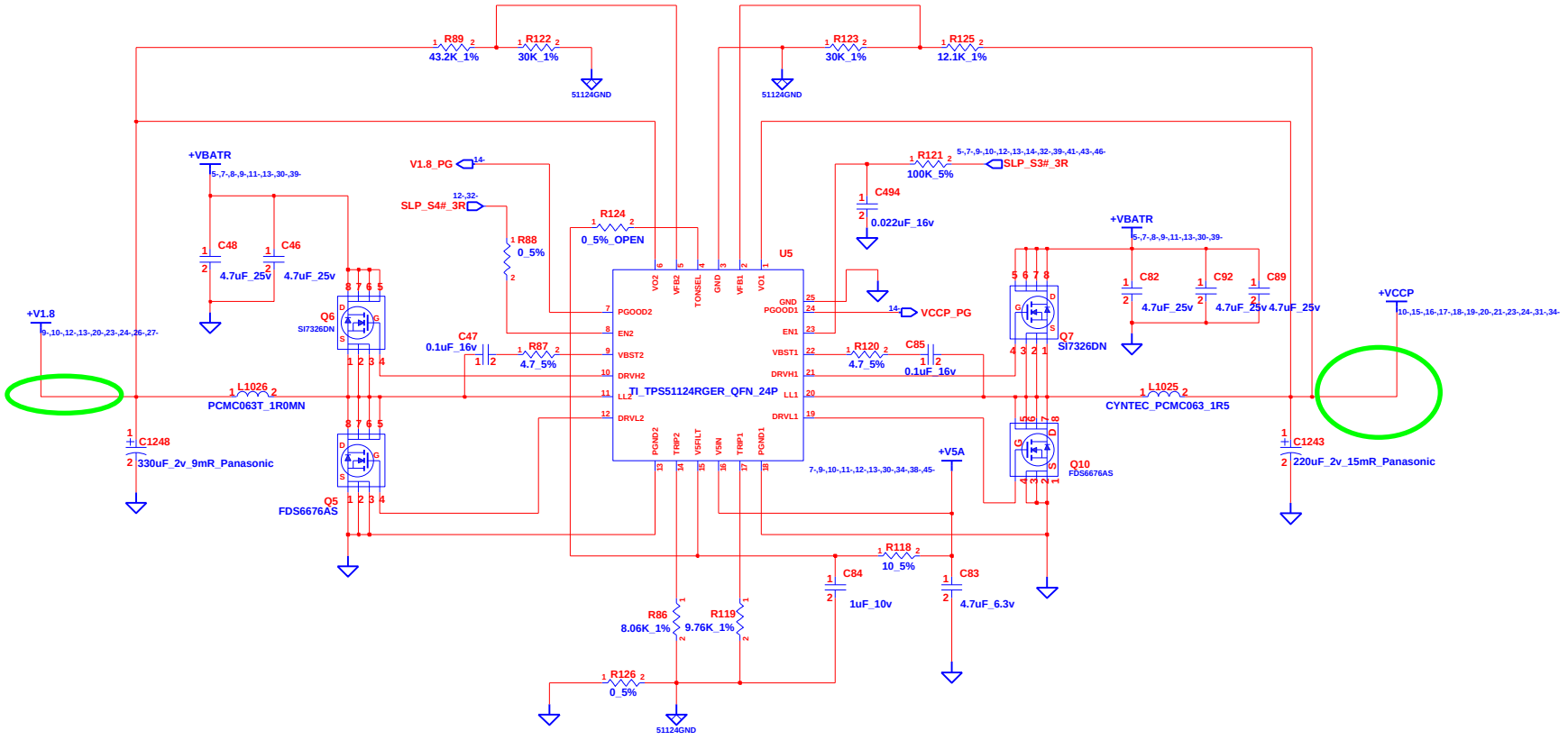

INVENTEC

TITLE **S-SERIES - Discrete**
System Power(+V1.8/+VCCP)

SIZE	CODE	DOC. NUMBER	REV
A3	CS	1310A21614	A01

CHANGE by *Drawer_Name* *31-Mar-2008*

SHEET 8 OF 54

POW_SW1	POW_SW0	+VDD_CORE
0	0	1.1V
0	1	1.0V
1	0	0.9V

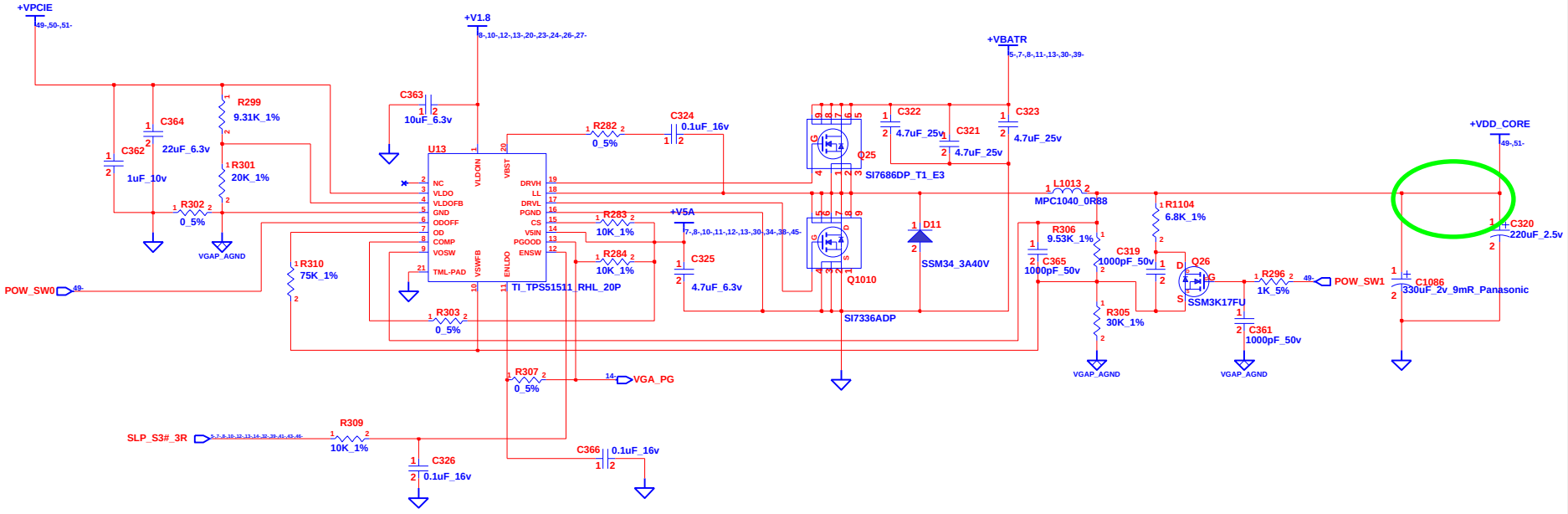

INVENTEC

TITLE
S-SERIES - Discrete
Graphic Power (+VDD_CORE & +VPCIE)

SIZE	CODE	DOC. NUMBER	REV
A3	CS	1310A21614	A01

CHANGE by *Drawer_Name* *31-Mar-2008*

SHEET 9 OF 54

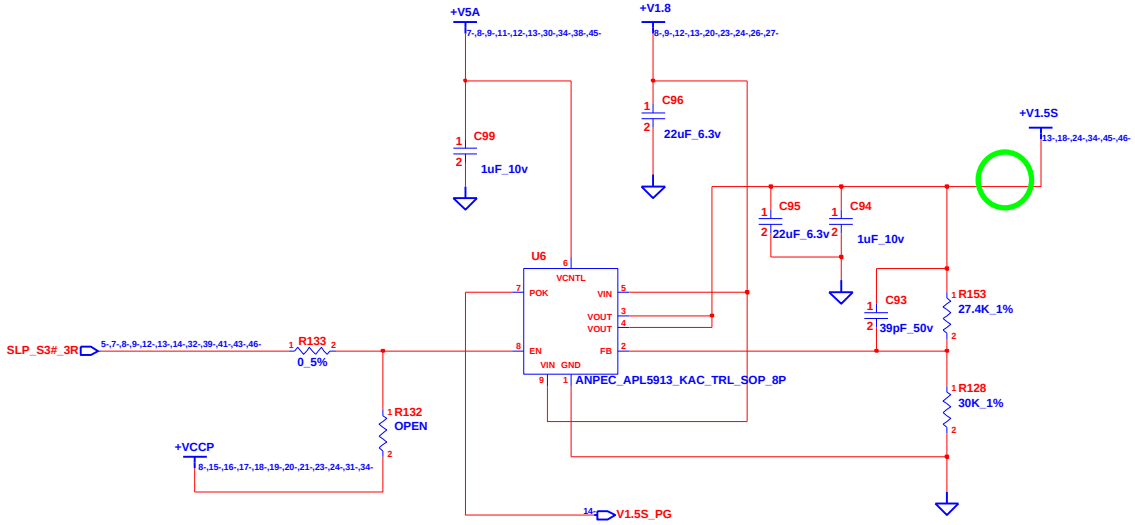

CHANGE by	Drawer_Name	31-Mar-2008	

INVENTEC

TITLE **S-SERIES - Discrete**
System Power (+V1.5S)

SIZE	CODE	DOC. NUMBER	REV
A3	CS	1310A21614	A01

SHEET 10 OF 54

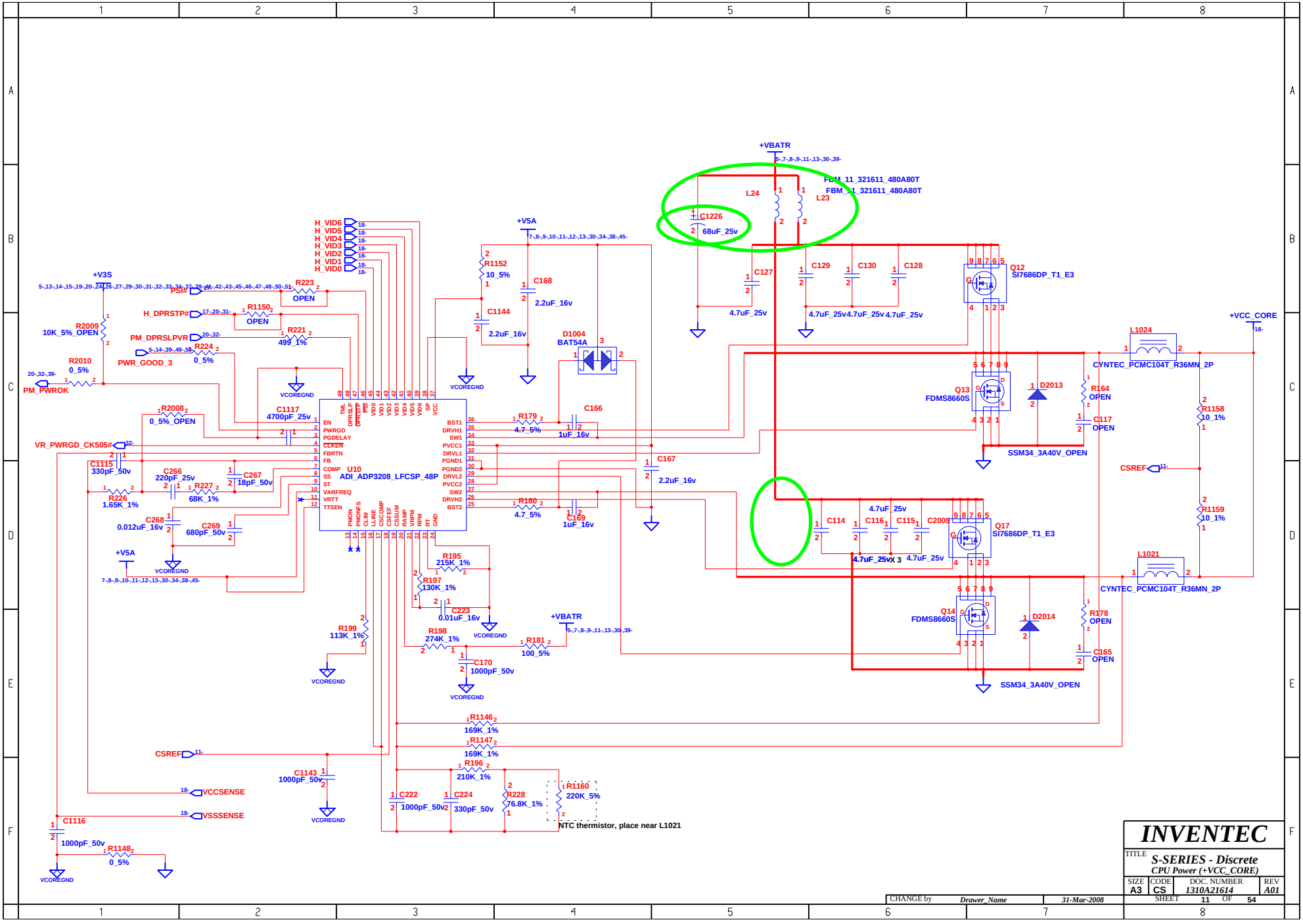
+VBATR
FBM_11_321611_480A80T
FBM_11_321611_480A80T
L24
L23
C1226
68uF_25v
+V5A
R1152
10_5%
C168
2.2uF_16v
C1144
2.2uF_16v
D1004
BAT54A
C127
4.7uF_25v
C129
C130
C128
4.7uF_25v
4.7uF_25v
4.7uF_25v
Q12
SI7686DP_T1_E3
+VCC_CORE
L1024
CYNTEC_PCMC104T_R36MN_2P
Q13
FDMS8660S
D2013
R164
OPEN
C117
OPEN
R1158
10_1%
SSM34_3A40V_OPEN
CSREF
R1159
10_1%
C114
C116
C115
C2005
4.7uF_25v
4.7uF_25v x 3
4.7uF_25v
Q17
SI7686DP_T1_E3
L1021
CYNTEC_PCMC104T_R36MN_2P
Q14
FDMS8660S
D2014
R178
OPEN
C165
OPEN
SSM34_3A40V_OPEN
H_VID6
H_VID5
H_VID4
H_VID3
H_VID2
H_VID1
H_VID0
+V3S
PSI#
R223
OPEN
H_DPRSTP#
R1150
OPEN
R2009
10K_5%_OPEN
PM_DPRSLPVR
R221
499_1%
PWR_GOOD_3
R224
0_5%
R2010
0_5%
PM_PWROK
VCOREGND
C1117
4700pF_25v
R2008
0_5%_OPEN
VR_PWRGD_CK505#
C1115
330pF_50v
C266
220pF_25v
R227
68K_1%
C267
18pF_50v
R226
1.65K_1%
C268
0.012uF_16v
C269
680pF_50v
U10
ADI_ADP3208_LFCSP_48P
EN
PWRGD
PGDELAY
CLKEN
FBRTN
FB
COMP
SS
ST
VARFREQ
VRTT
TTSEN
TMI
DPRSLP
DPRSTP
PSI
VID0
VID1
VID2
VID3
VID4
VID5
VID6
SP
SN
VCC
BST1
DRVH1
SW1
PVCC1
DRVL1
PGND1
PGND2
DRVL2
PVCC2
SW2
DRVH2
BST2
PMON
PMONFS
CLM
LLINE
VCOMP
CSFEF
CSSUM
RAMP
VRPM
RPM
RT
GND
R179
4.7_5%
C166
1uF_16v
C167
2.2uF_16v
R180
4.7_5%
C169
1uF_16v
R195
215K_1%
R197
130K_1%
C223
0.01uF_16v
R199
113K_1%
R198
274K_1%
R181
100_5%
C170
1000pF_50v
R1146
169K_1%
R1147
169K_1%
R196
210K_1%
C1143
1000pF_50v
C222
1000pF_50v
C224
330pF_50v
R228
76.8K_1%
R1160
220K_5%
NTC thermistor, place near L1021
VCCSENSE
VSSSENSE
C1116
1000pF_50v
R1148
0_5%
INVENTEC
TITLE
S-SERIES - Discrete
CPU Power (+VCC_CORE)
SIZE A3
CODE CS
DOC. NUMBER 1310A21614
REV A01
SHEET 11 OF 54
CHANGE by Drawer_Name
31-Mar-2008

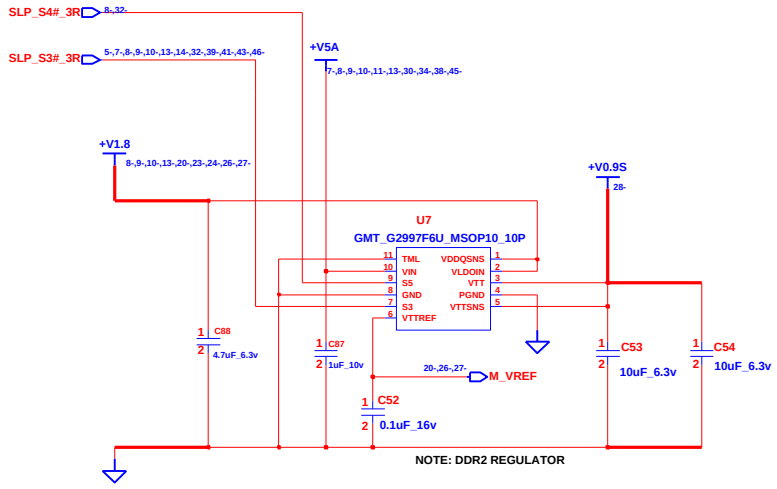

INVENTEC

TITLE
S-SERIES - Discrete
DDR Termination Voltage (+V0.9S)

SIZE	CODE	DOC. NUMBER	REV
A3	CS	1310A21614	A01

CHANGE by Drawer_Name 31-Mar-2008

SHEET 12 OF 54

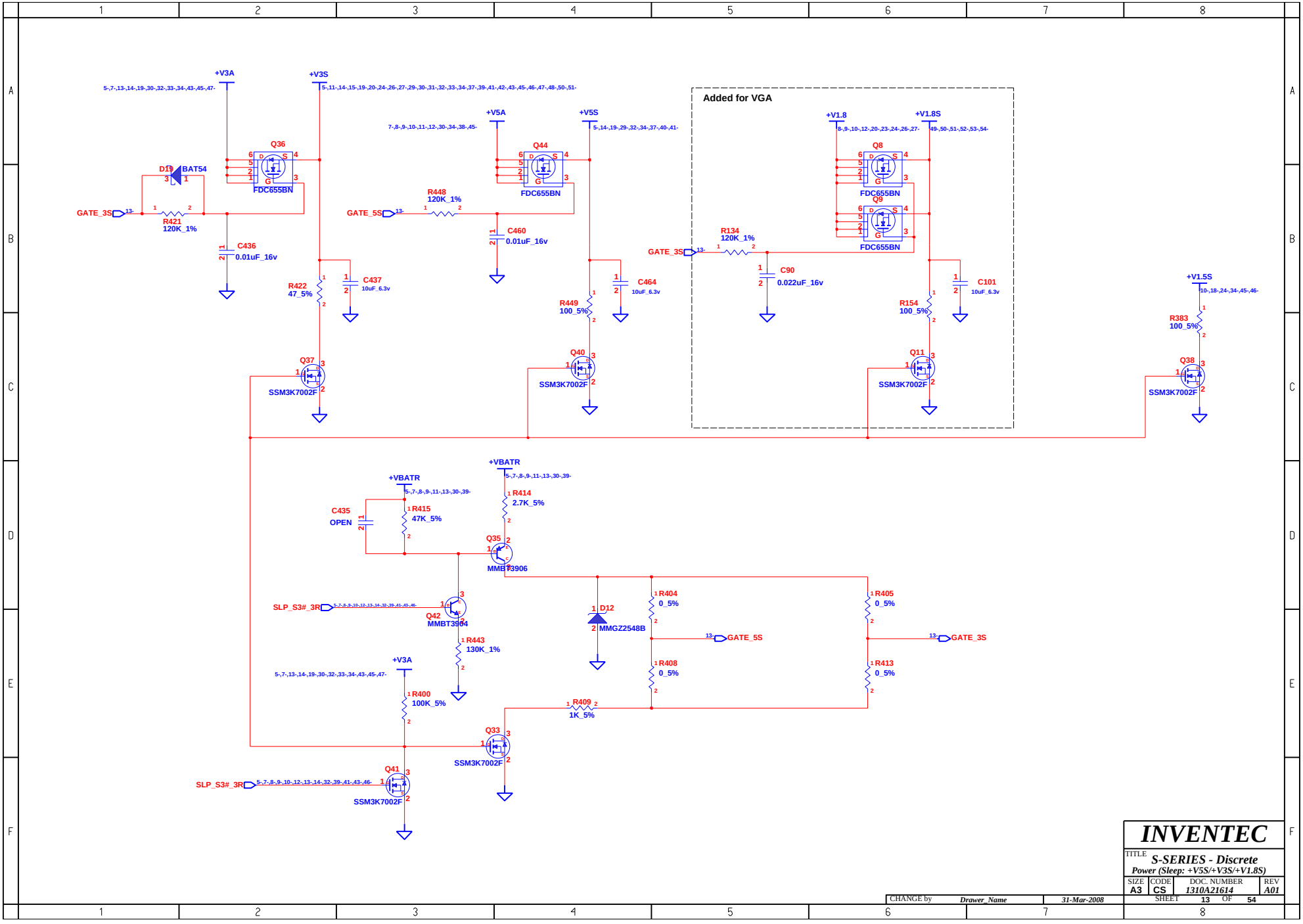
Added for VGA
+V3A
+V3S
+V5A
+V5S
+V1.8
+V1.8S
+V1.5S
+VBATR
Q36
FDC655BN
Q44
FDC655BN
Q8
FDC655BN
Q9
FDC655BN
D11
BAT54
GATE_3S
GATE_5S
R421
120K_1%
R448
120K_1%
C436
0.01uF_16v
C460
0.01uF_16v
R134
120K_1%
C90
0.022uF_16v
R422
47_5%
C437
10uF_6.3v
R449
100_5%
C464
10uF_6.3v
R154
100_5%
C101
10uF_6.3v
R383
100_5%
Q37
SSM3K7002F
Q40
SSM3K7002F
Q11
SSM3K7002F
Q38
SSM3K7002F
C435
OPEN
R415
47K_5%
R414
2.7K_5%
Q35
MMBT3906
SLP_S3#_3R
Q42
MMBT3904
R443
130K_1%
D12
MMGZ2548B
R404
0_5%
R408
0_5%
R405
0_5%
R413
0_5%
R400
100K_5%
R409
1K_5%
Q33
SSM3K7002F
Q41
SSM3K7002F
INVENTEC
TITLE
S-SERIES - Discrete
Power (Sleep: +V5S/+V3S/+V1.8S)
SIZE A3
CODE CS
DOC. NUMBER 1310A21614
REV A01
CHANGE by Drawer_Name
31-Mar-2008
SHEET 13 OF 54

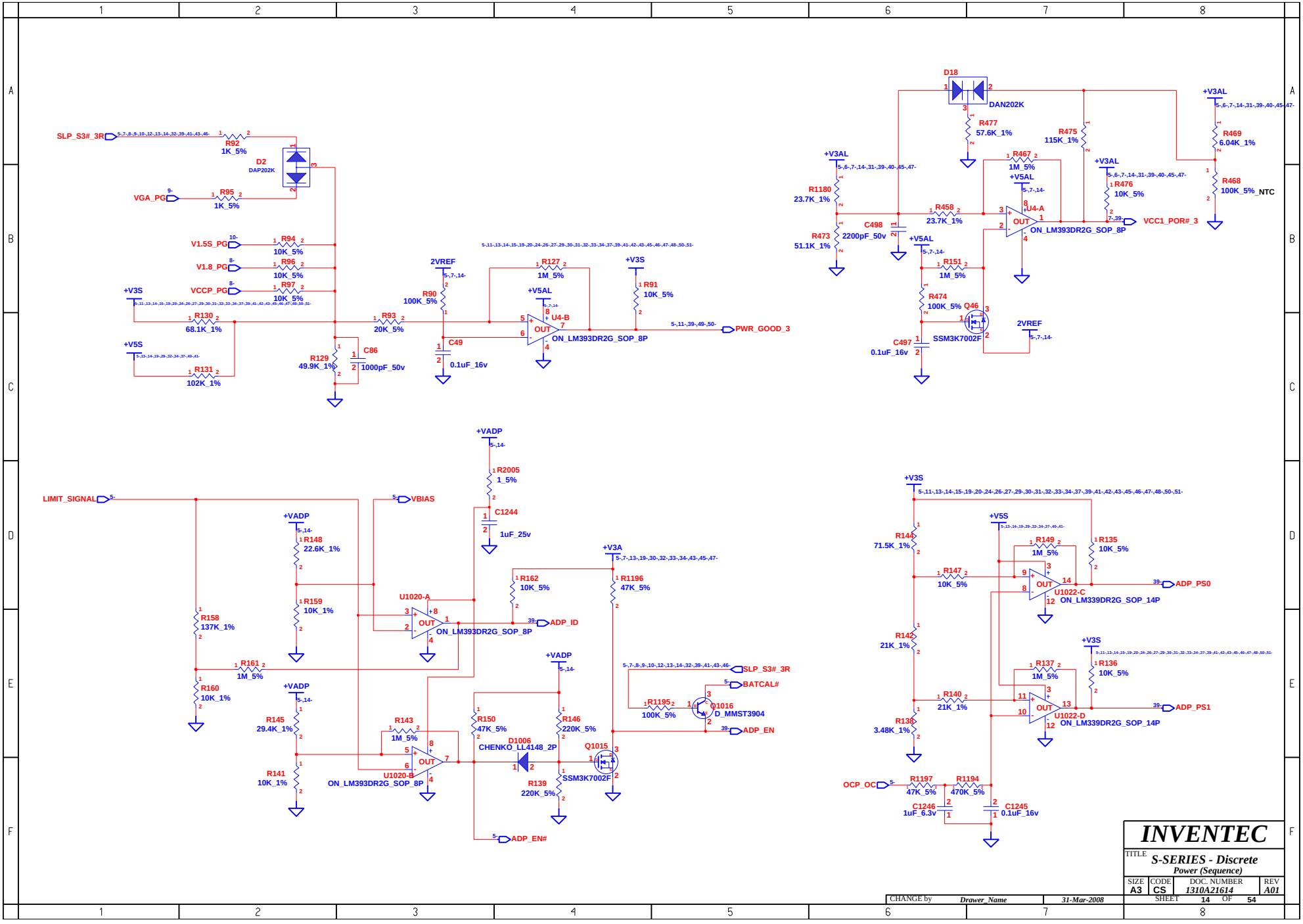
SLP_S3#_3R
R92
1K_5%
D2
DAP202K
VGA_PG
R95
1K_5%
V1.5S_PG
R94
10K_5%
V1.8_PG
R96
10K_5%
VCCP_PG
R97
10K_5%
+V3S
R130
68.1K_1%
+V5S
R131
102K_1%
R129
49.9K_1%
C86
1000pF_50v
R93
20K_5%
2VREF
R90
100K_5%
C49
0.1uF_16v
R127
1M_5%
+V5AL
U4-B
OUT
ON_LM393DR2G_SOP_8P
+V3S
R91
10K_5%
PWR_GOOD_3
D18
DAN202K
R477
57.6K_1%
R475
115K_1%
+V3AL
R469
6.04K_1%
R468
100K_5%_NTC
R467
1M_5%
R476
10K_5%
VCC1_POR#_3
R1180
23.7K_1%
R473
51.1K_1%
C498
2200pF_50v
R458
23.7K_1%
U4-A
ON_LM393DR2G_SOP_8P
R151
1M_5%
R474
100K_5%
Q46
SSM3K7002F
C497
0.1uF_16v
LIMIT_SIGNAL
+VADP
R148
22.6K_1%
R159
10K_1%
R158
137K_1%
R161
1M_5%
R160
10K_1%
VBIAS
R2005
1_5%
C1244
1uF_25v
U1020-A
ON_LM393DR2G_SOP_8P
R162
10K_5%
ADP_ID
+V3A
R1196
47K_5%
R145
29.4K_1%
R141
10K_1%
R143
1M_5%
U1020-B
ON_LM393DR2G_SOP_8P
R150
47K_5%
D1006
CHENKO_LL4148_2P
R139
220K_5%
R146
220K_5%
Q1015
SSM3K7002F
ADP_EN#
SLP_S3#_3R
BATCAL#
R1195
100K_5%
Q1016
D_MMST3904
ADP_EN
R144
71.5K_1%
R147
10K_5%
R149
1M_5%
R135
10K_5%
U1022-C
ON_LM339DR2G_SOP_14P
ADP_PS0
R142
21K_1%
R140
21K_1%
R138
3.48K_1%
R137
1M_5%
R136
10K_5%
U1022-D
ON_LM339DR2G_SOP_14P
ADP_PS1
OCP_OC
R1197
47K_5%
R1194
470K_5%
C1246
1uF_6.3v
C1245
0.1uF_16v
INVENTEC
TITLE
S-SERIES - Discrete
Power (Sequence)
SIZE A3
CODE CS
DOC. NUMBER 1310A21614
REV A01
SHEET 14 OF 54
CHANGE by Drawer_Name
31-Mar-2008

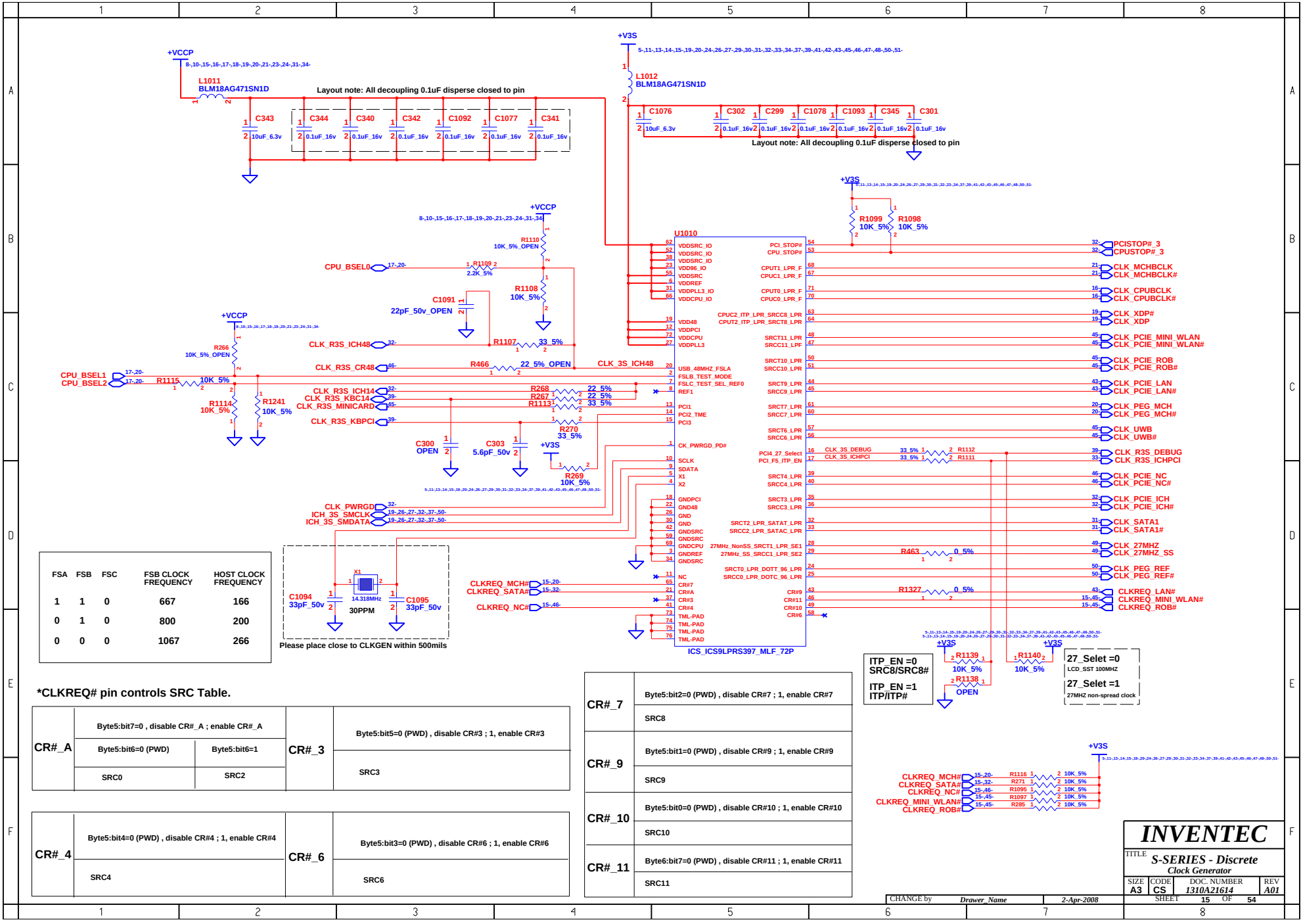

FSA	FSB	FSC	FSB CLOCK FREQUENCY	HOST CLOCK FREQUENCY
1	1	0	667	166
0	1	0	800	200
0	0	0	1067	266

***CLKREQ# pin controls SRC Table.**

CR#_A	Byte5:bit7=0 , disable CR#_A ; enable CR#_A		CR#_3	Byte5:bit5=0 (PWD) , disable CR#3 ; 1, enable CR#3
	Byte5:bit6=0 (PWD)	Byte5:bit6=1		SRC3
	SRC0	SRC2		

CR#_4	Byte5:bit4=0 (PWD) , disable CR#4 ; 1, enable CR#4	CR#_6	Byte5:bit3=0 (PWD) , disable CR#6 ; 1, enable CR#6
	SRC4		SRC6

CR#_7	Byte5:bit2=0 (PWD) , disable CR#7 ; 1, enable CR#7
	SRC8
CR#_9	Byte5:bit1=0 (PWD) , disable CR#9 ; 1, enable CR#9
	SRC9
CR#_10	Byte5:bit0=0 (PWD) , disable CR#10 ; 1, enable CR#10
	SRC10
CR#_11	Byte6:bit7=0 (PWD) , disable CR#11 ; 1, enable CR#11
	SRC11

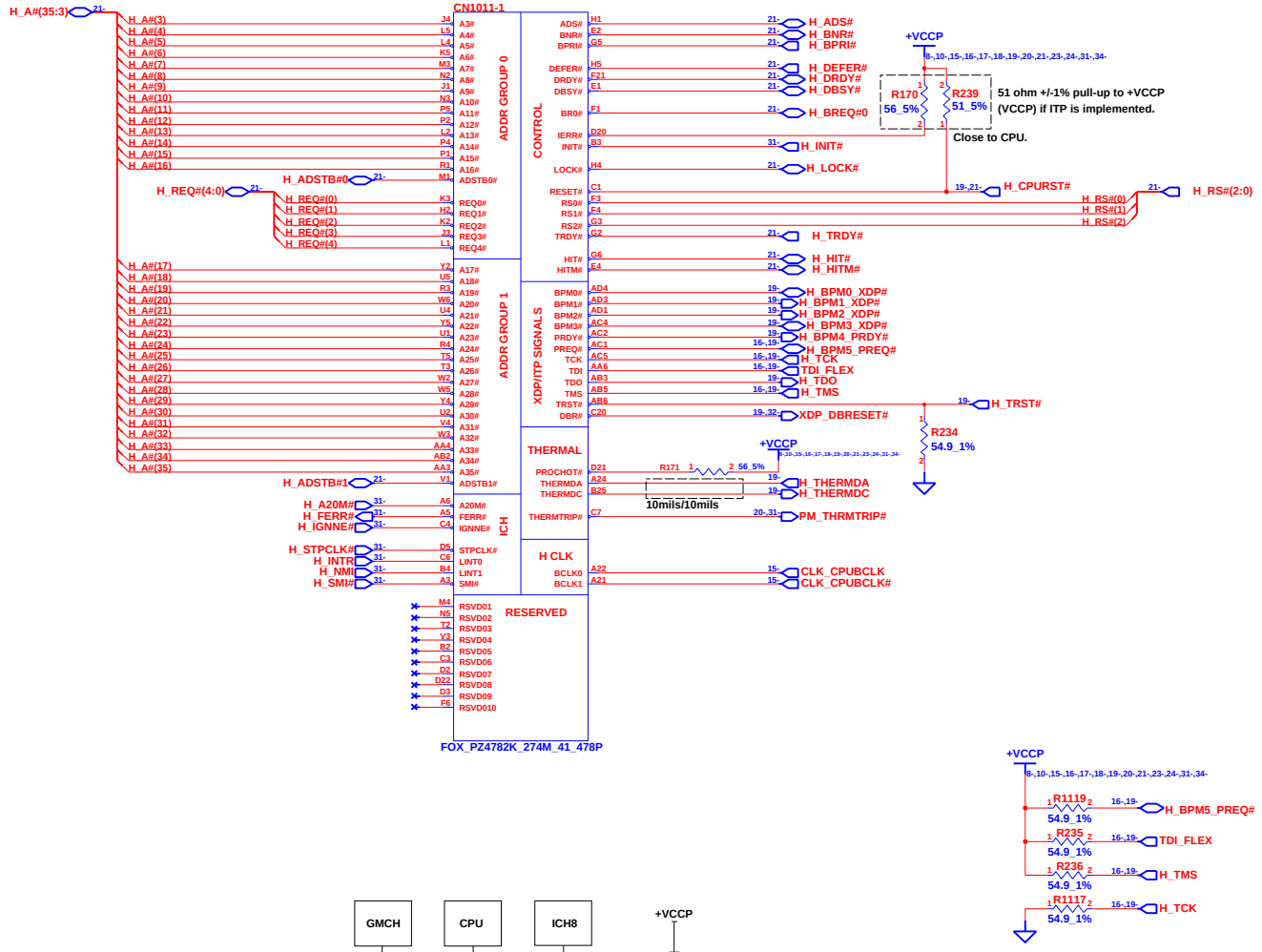

INVENTEC

TITLE S-SERIES - Discrete
CPU Penryn-1

SIZE	CODE	DOC. NUMBER	REV
A3	CS	1310A21614	A01

SHEET 16 OF 54

CHANGE by Drawer_Name 31-Mar-2008

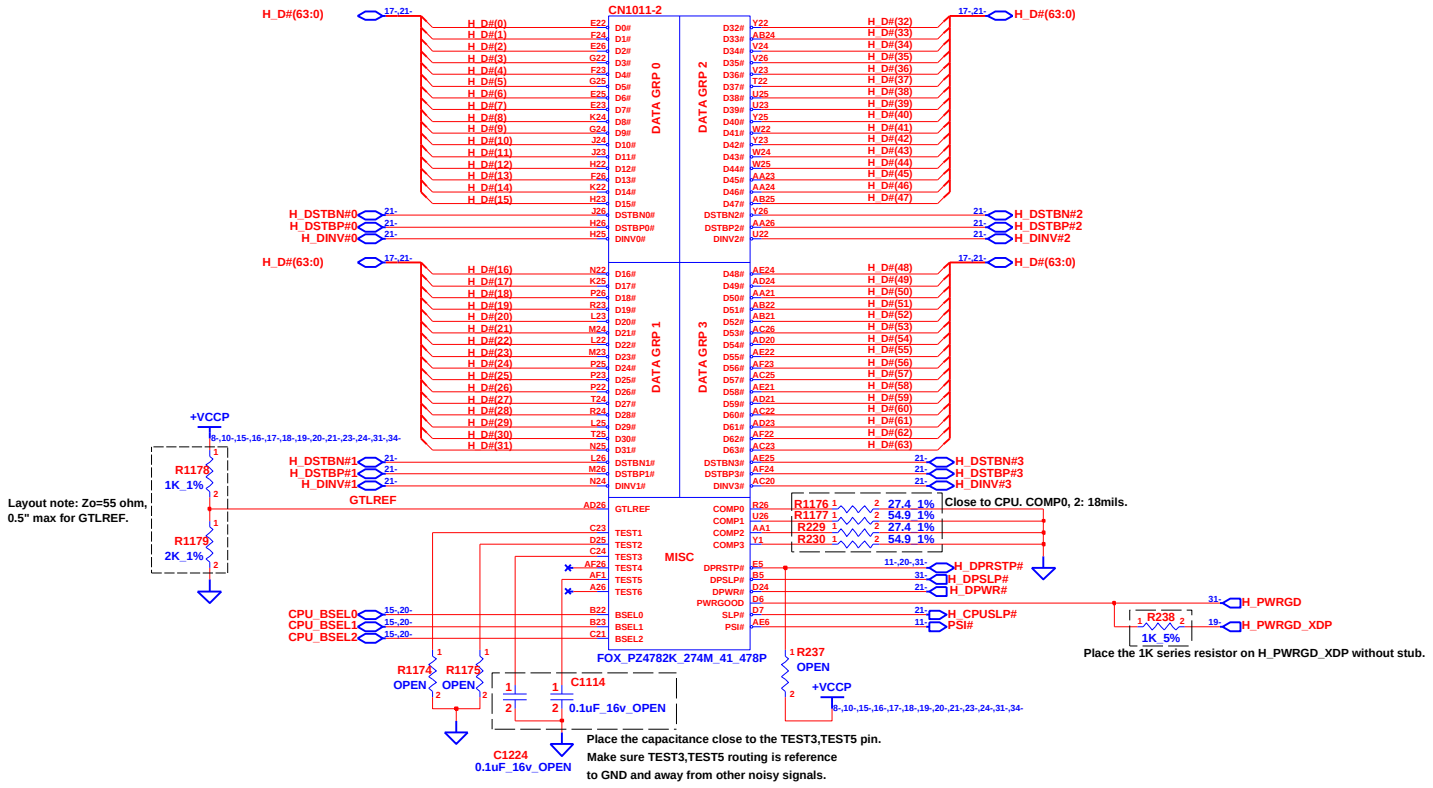

CHANGE by	Drawer_Name	31-Mar-2008	

INVENTEC

TITLE *S-SERIES - Discrete*
CPU Penryn-2

SIZE	CODE	DOC. NUMBER	REV
A3	CS	1310A21614	A01

SHEET 17 OF 54

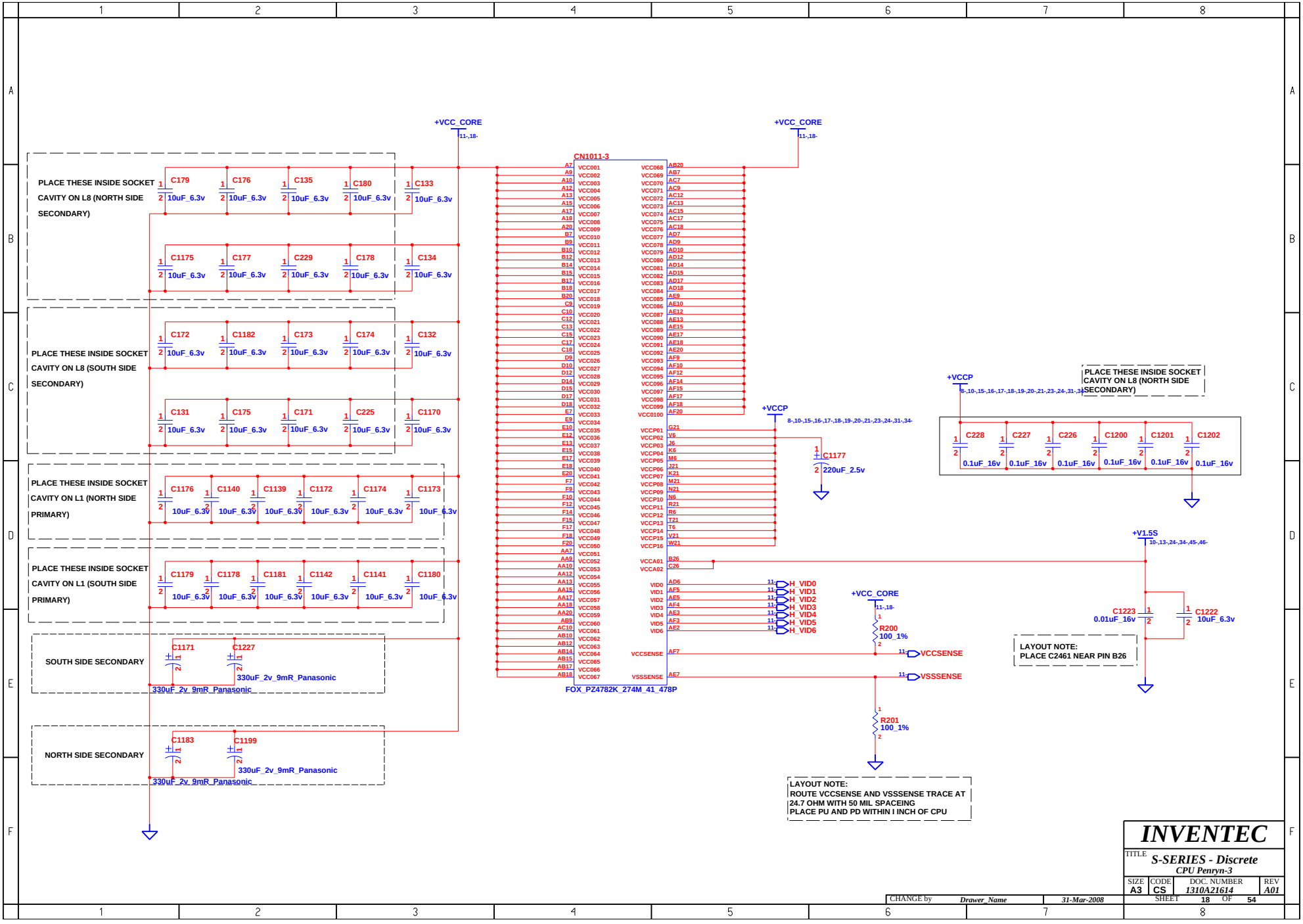
+VCC_CORE
11-,18-
CN1011-3
PLACE THESE INSIDE SOCKET CAVITY ON L8 (NORTH SIDE SECONDARY)
C179 C176 C135 C180 C133
C1175 C177 C229 C178 C134
10uF_6.3v
PLACE THESE INSIDE SOCKET CAVITY ON L8 (SOUTH SIDE SECONDARY)
C172 C1182 C173 C174 C132
C131 C175 C171 C225 C1170
PLACE THESE INSIDE SOCKET CAVITY ON L1 (NORTH SIDE PRIMARY)
C1176 C1140 C1139 C1172 C1174 C1173
PLACE THESE INSIDE SOCKET CAVITY ON L1 (SOUTH SIDE PRIMARY)
C1179 C1178 C1181 C1142 C1141 C1180
SOUTH SIDE SECONDARY
C1171 C1227
330uF_2v_9mR_Panasonic
NORTH SIDE SECONDARY
C1183 C1199
FOX_PZ4782K_274M_41_478P
+VCCP
8-,10-,15-,16-,17-,18-,19-,20-,21-,23-,24-,31-,34-
C1177
220uF_2.5v
PLACE THESE INSIDE SOCKET CAVITY ON L8 (NORTH SIDE SECONDARY)
C228 C227 C226 C1200 C1201 C1202
0.1uF_16v
+V1.5S
10-,13-,24-,34-,45-,46-
C1223 0.01uF_16v
C1222 10uF_6.3v
LAYOUT NOTE:
PLACE C2461 NEAR PIN B26
H_VID0
H_VID1
H_VID2
H_VID3
H_VID4
H_VID5
H_VID6
R200 100_1%
VCCSENSE
VSSSENSE
R201 100_1%
LAYOUT NOTE:
ROUTE VCCSENSE AND VSSSENSE TRACE AT 24.7 OHM WITH 50 MIL SPACEING
PLACE PU AND PD WITHIN I INCH OF CPU
INVENTEC
TITLE
S-SERIES - Discrete
CPU Penryn-3
SIZE A3
CODE CS
DOC. NUMBER 1310A21614
REV A01
CHANGE by Drawer_Name
31-Mar-2008
SHEET 18 OF 54

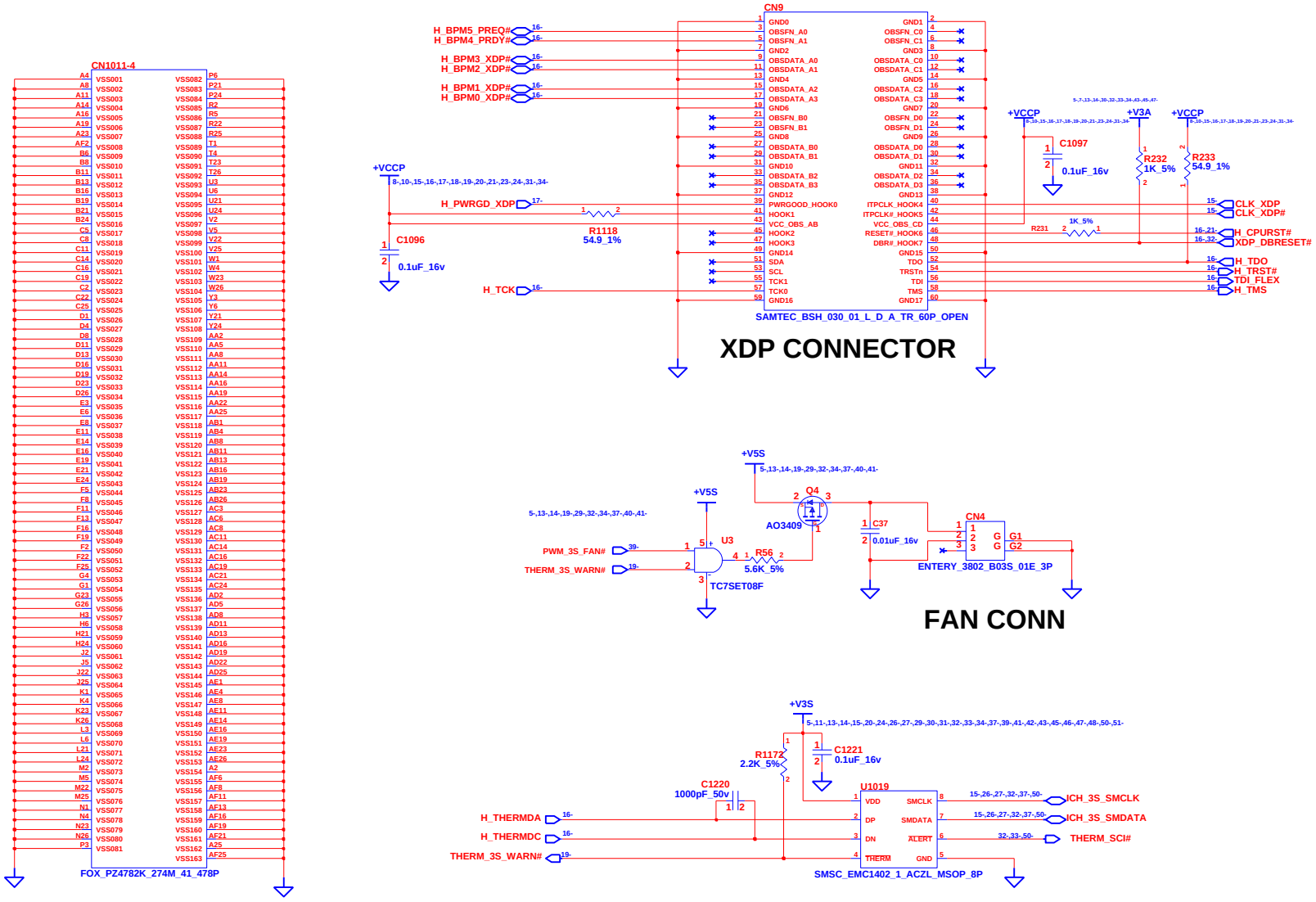

INVENTEC			
TITLE S-SERIES - Discrete XDP & Thermal & Fan			
SIZE A3	CODE CS	DOC. NUMBER 1310A21614	REV A01
CHANGE by Drawer_Name	31-Mar-2008	SHEET 19 OF 54	

MCH_CFG(5)	LOW=DMIx2 HIGH=DMIx4

MCH_CFG(7) (CPU Strap)	LOW=RSVD HIGH=Mobile CPU

MCH_CFG(9) PCIE Graphics Lane	LOW=Reverse Lane HIGH=Normal operation

NOTE : USE 4K-OHM RESISTOR WHEN INSTALLING PULL-UP/PULL-DOWN RESISTOR ON ANY MCH-CFG CONNECTION/PINS.

MCH_CFG(13:12) XOR/ALLZ	00=PARTIAL CLOCK GATING DISABLE 01=XOR MODE ENABLE 10=ALL-Z MODE ENABLE 11=NORMAL OPERATION

MCH_CFG(16) (FSB Dynamic ODT)	LOW=Dynamic ODT Disable HIGH=Dynamic ODT Enable

NOTE: CFG[2:0] STRP : 011b : 667 MT/S
010 : 800 MT/S
000 : 1067 MT/S

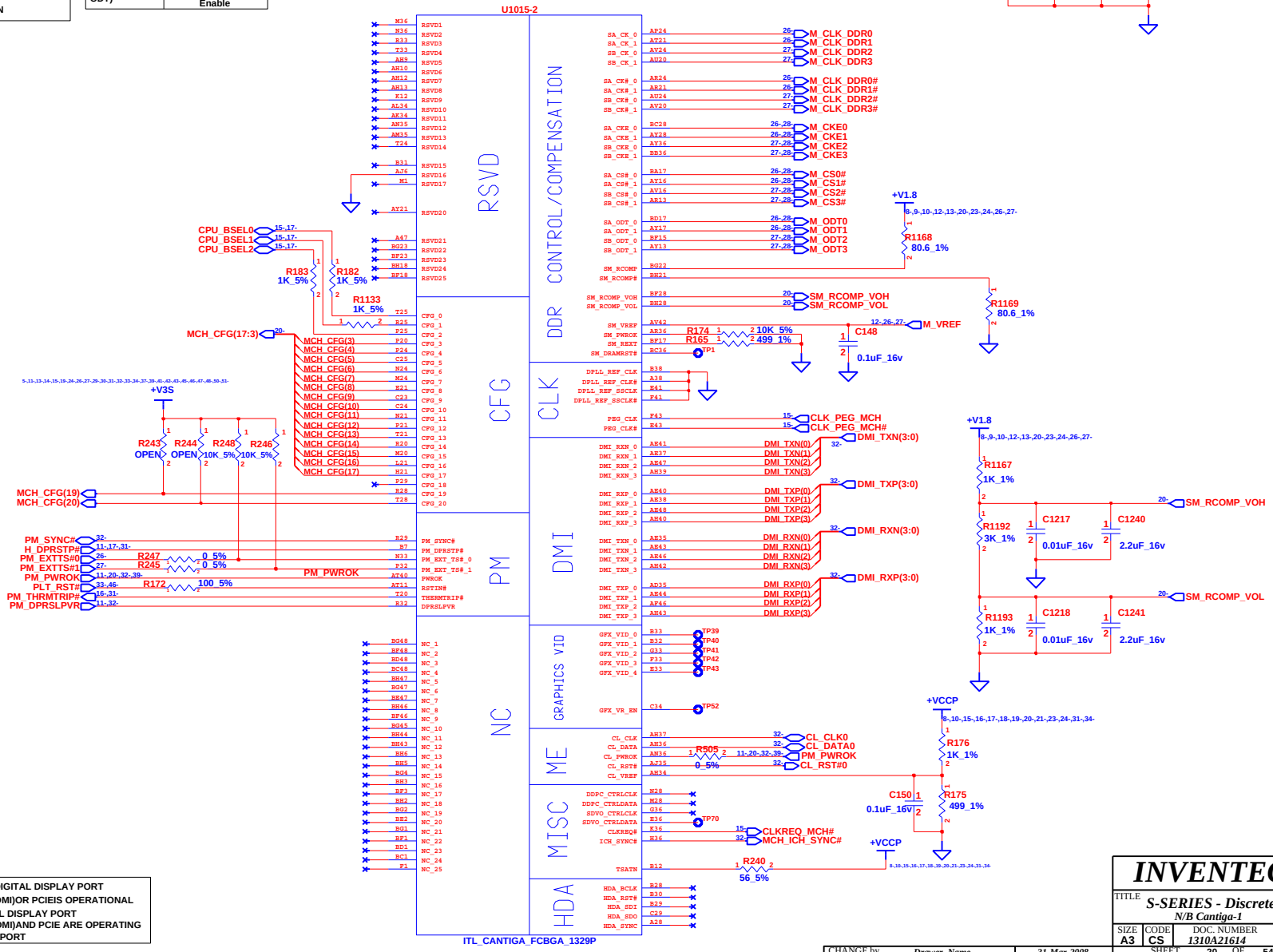

MCH_CFG(19) (DMI LANE REVERSAL)	LOW=NORMAL HIGH=LANES REVERSED

MCH_CFG(20) DIGIAL DISPLAY PORT(SDVO/DP/iHDMI) CONCURRENT WITH PCIE	LOW=ONLY DIGITAL DISPLAY PORT (SDVO/DP/iHDMI)OR PCIEIS OPERATIONAL HIGH=DIGITAL DISPLAY PORT (SDVO/DP/iHDMI)AND PCIE ARE OPERATING VIA THE PEG PORT

INVENTEC

TITLE: *S-SERIES - Discrete*
N/B Cantiga-1

SIZE	CODE	DOC. NUMBER	REV
A3	CS	1310A21614	A01

SHEET 20 OF 54

CHANGE by *Drawer_Name* *31-Mar-2008*

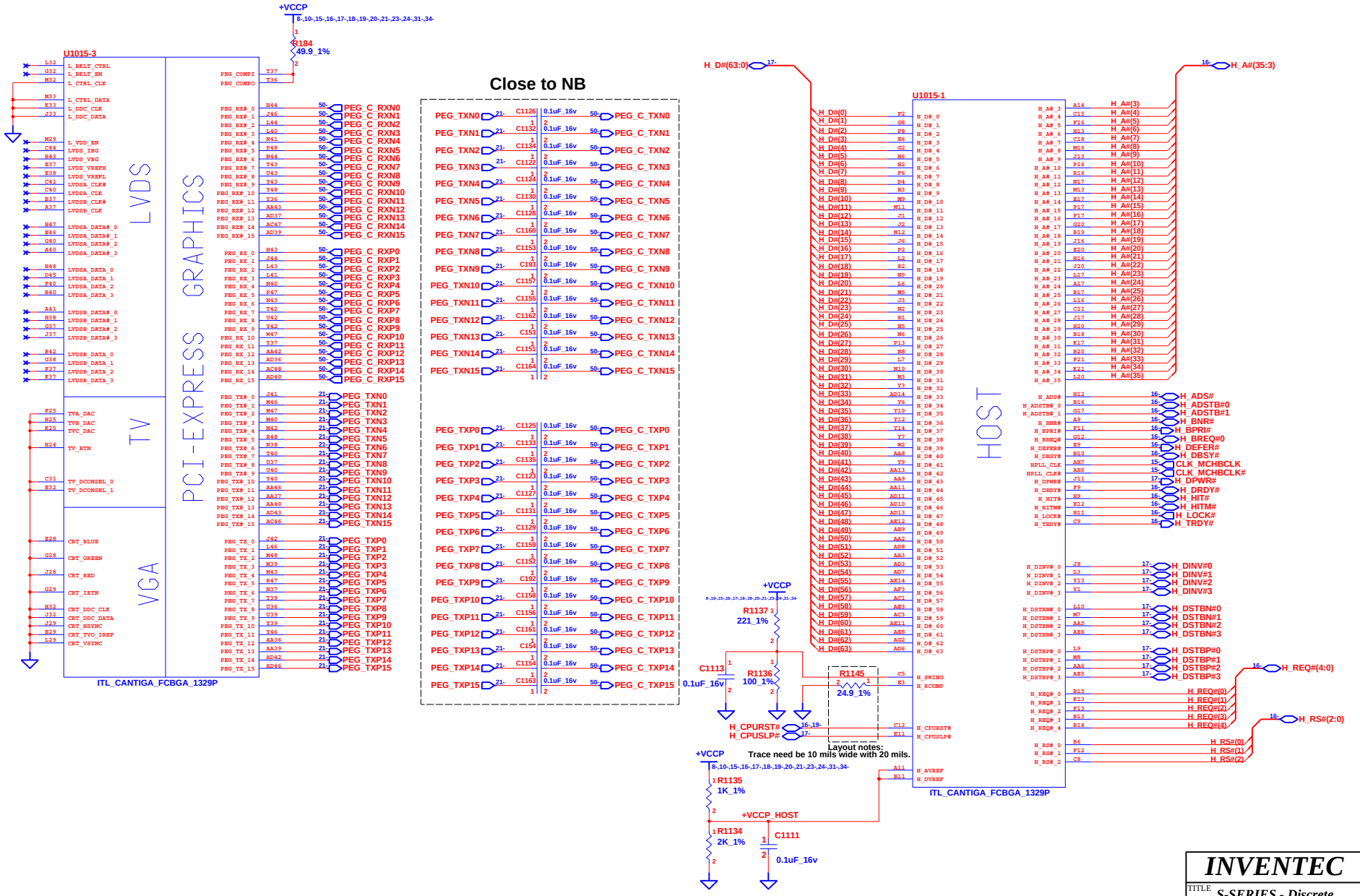

INVENTEC

TITLE: S-SERIES - Discrete
N/B Cantiga-2

SIZE	CODE	DOC. NUMBER	REV
A3	CS	1310A21614	A01

SHEET 21 OF 54

CHANGE by Drawer_Name 31-Mar-2008

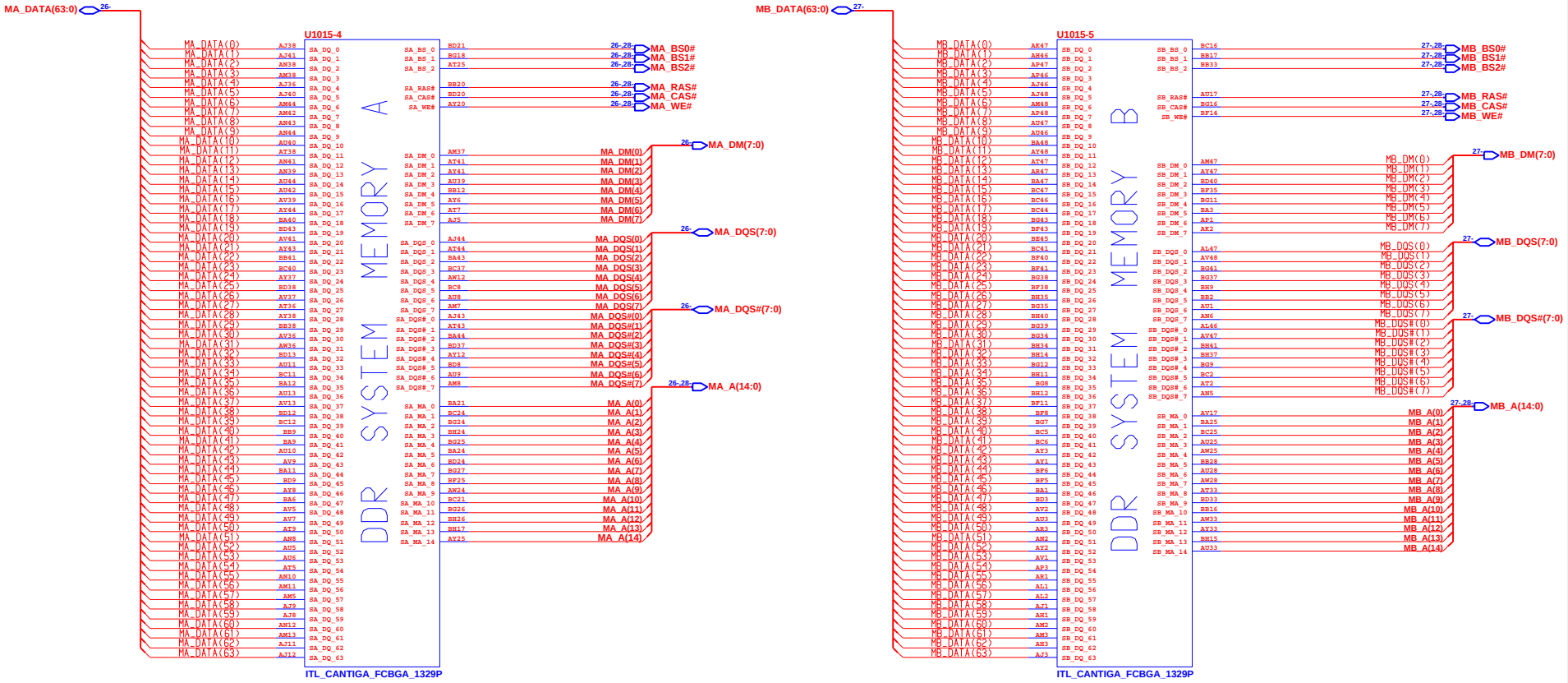

INVENTEC

TITLE
S-SERIES - Discrete
N/B Cantiga-3

SIZE	CODE	DOC. NUMBER	REV
A3	CS	1310A21614	A01

SHEET 22 OF 54

CHANGE by Drawer_Name 31-Mar-2008

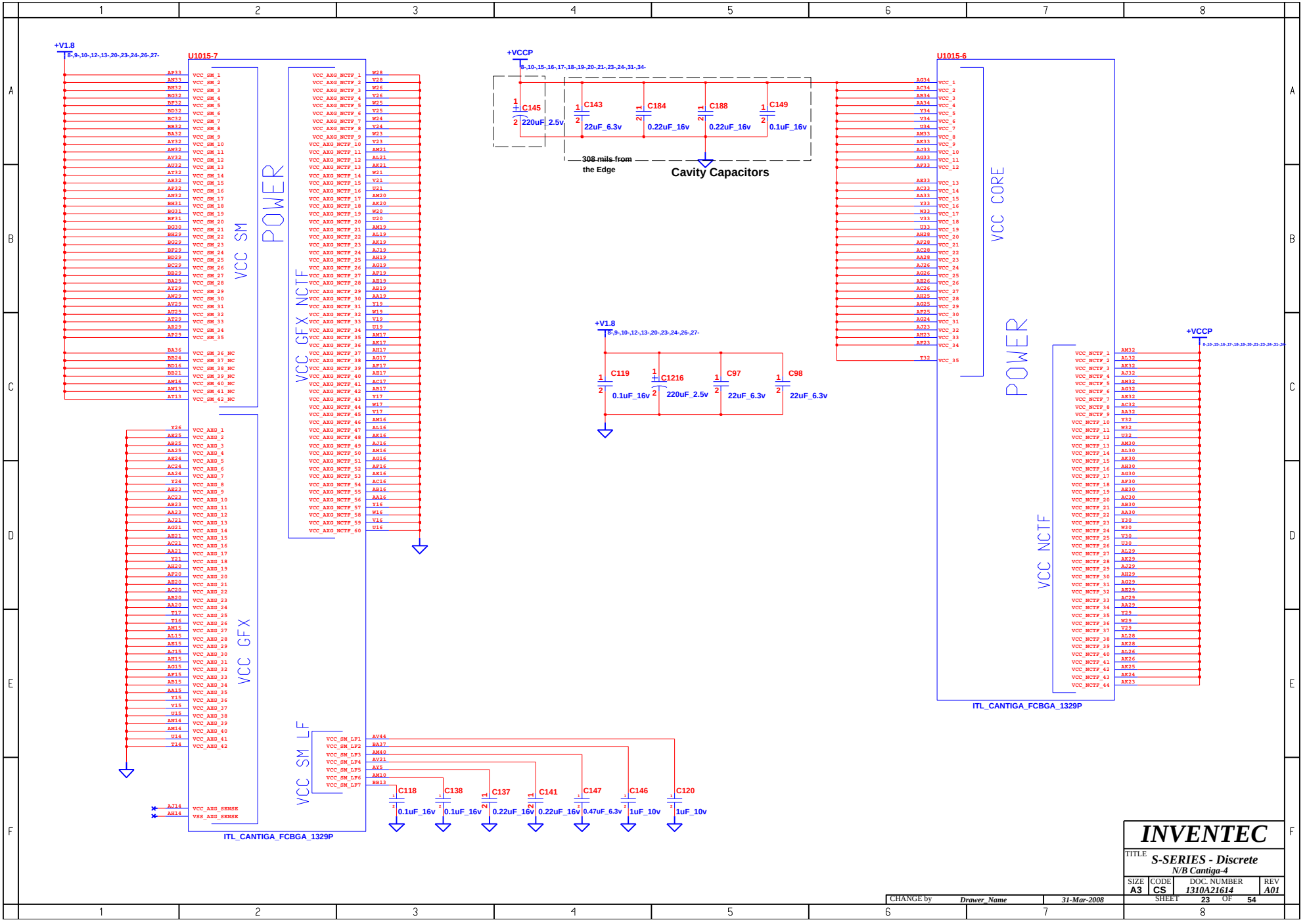
+V1.8
U1015-7
VCC SM
POWER
VCC GFX NCTF
VCC GFX
VCC SM LF
ITL_CANTIGA_FCBGA_1329P
+VCCP
C145 220uF_2.5v
C143 22uF_6.3v
C184 0.22uF_16v
C188 0.22uF_16v
C149 0.1uF_16v
308 mils from the Edge
Cavity Capacitors
C119 0.1uF_16v
C1216 220uF_2.5v
C97 22uF_6.3v
C98 22uF_6.3v
C118 0.1uF_16v
C138 0.1uF_16v
C137 0.22uF_16v
C141 0.22uF_16v
C147 0.47uF_6.3v
C146 1uF_10v
C120 1uF_10v
U1015-6
VCC CORE
VCC NCTF
ITL_CANTIGA_FCBGA_1329P
INVENTEC
TITLE
S-SERIES - Discrete
N/B Cantiga-4
SIZE A3
CODE CS
DOC. NUMBER 1310A21614
REV A01
SHEET 23 OF 54
CHANGE by Drawer_Name
31-Mar-2008

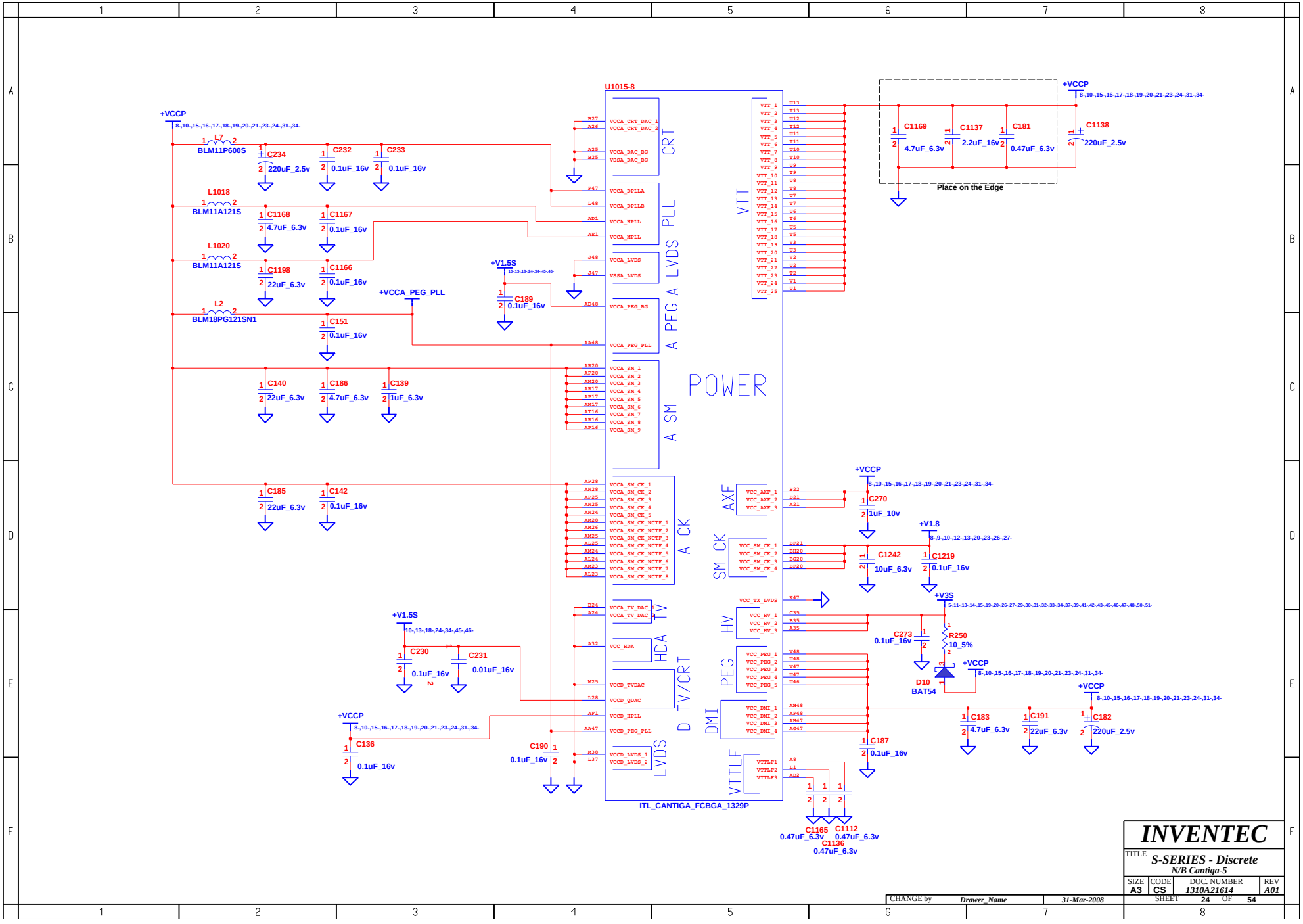

CHANGE by	Drawer_Name	31-Mar-2008	

INVENTEC

TITLE: *S-SERIES - Discrete*
N/B Cantiga-5

SIZE	CODE	DOC. NUMBER	REV
A3	CS	1310A21614	A01

SHEET 24 OF 54

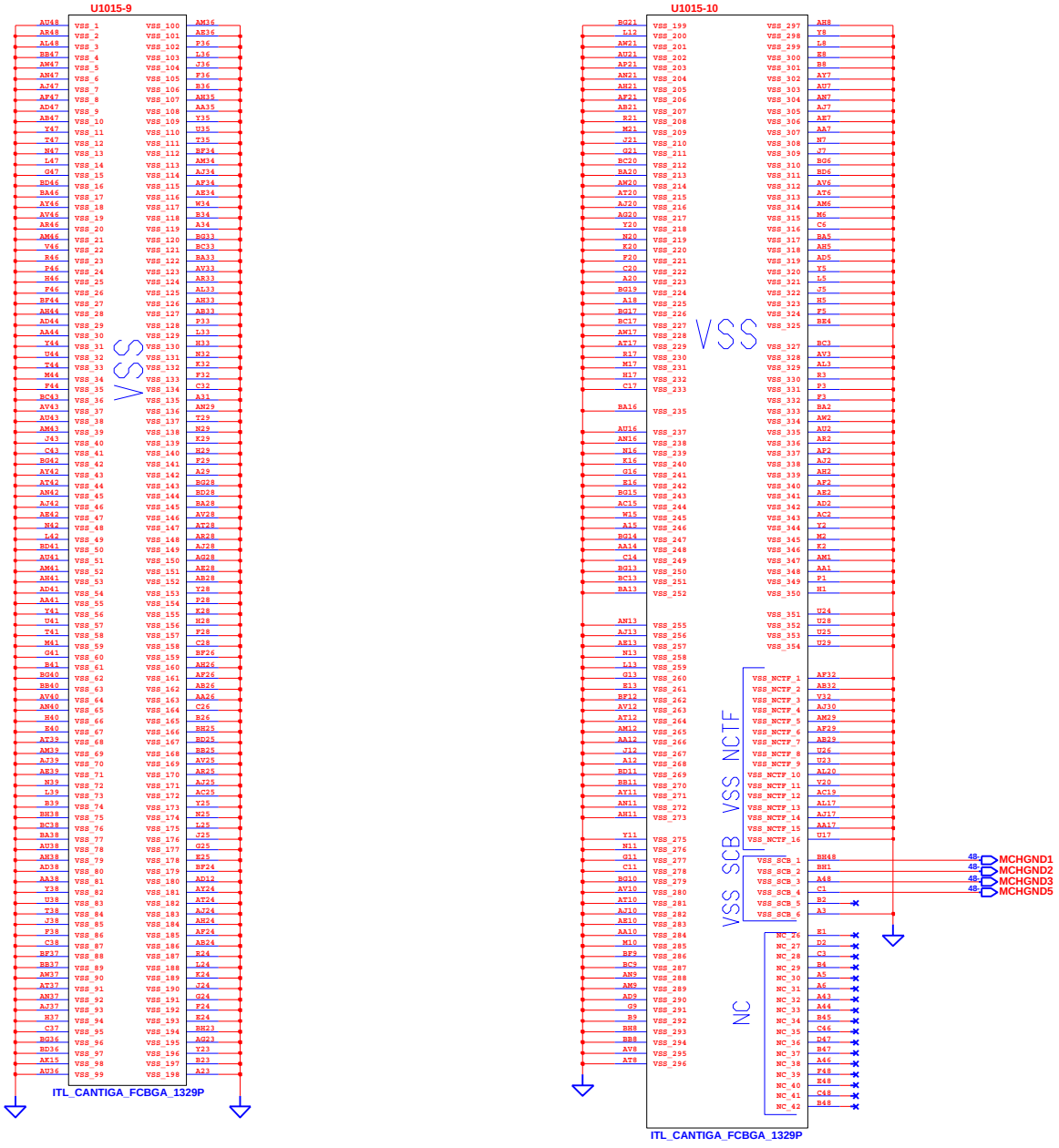

INVENTEC			
TITLE S-SERIES - Discrete N/B Cantiga-6			
SIZE A3	CODE CS	DOC. NUMBER 1310A21614	REV A01
CHANGE by Drawer_Name	31-Mar-2008	SHEET 25 OF 54	

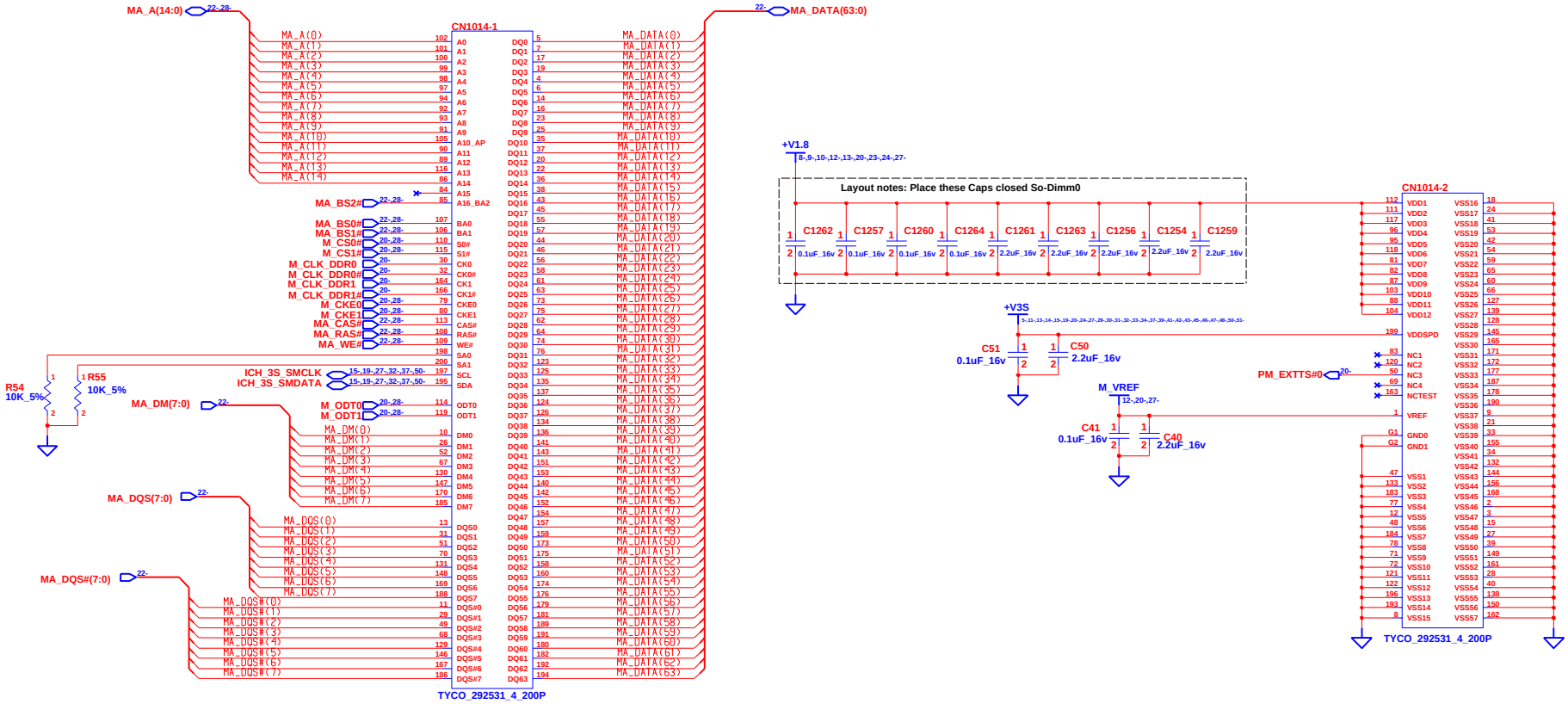

SO DIMM0_9.2mm

CHANGE by	Drawer_Name	31-Mar-2008	

INVENTEC

TITLE: *S-SERIES - Discrete*
DDR2 DIMM0

SIZE	CODE	DOC. NUMBER	REV
A3	CS	1310A21614	AX4

SHEET 26 OF 54

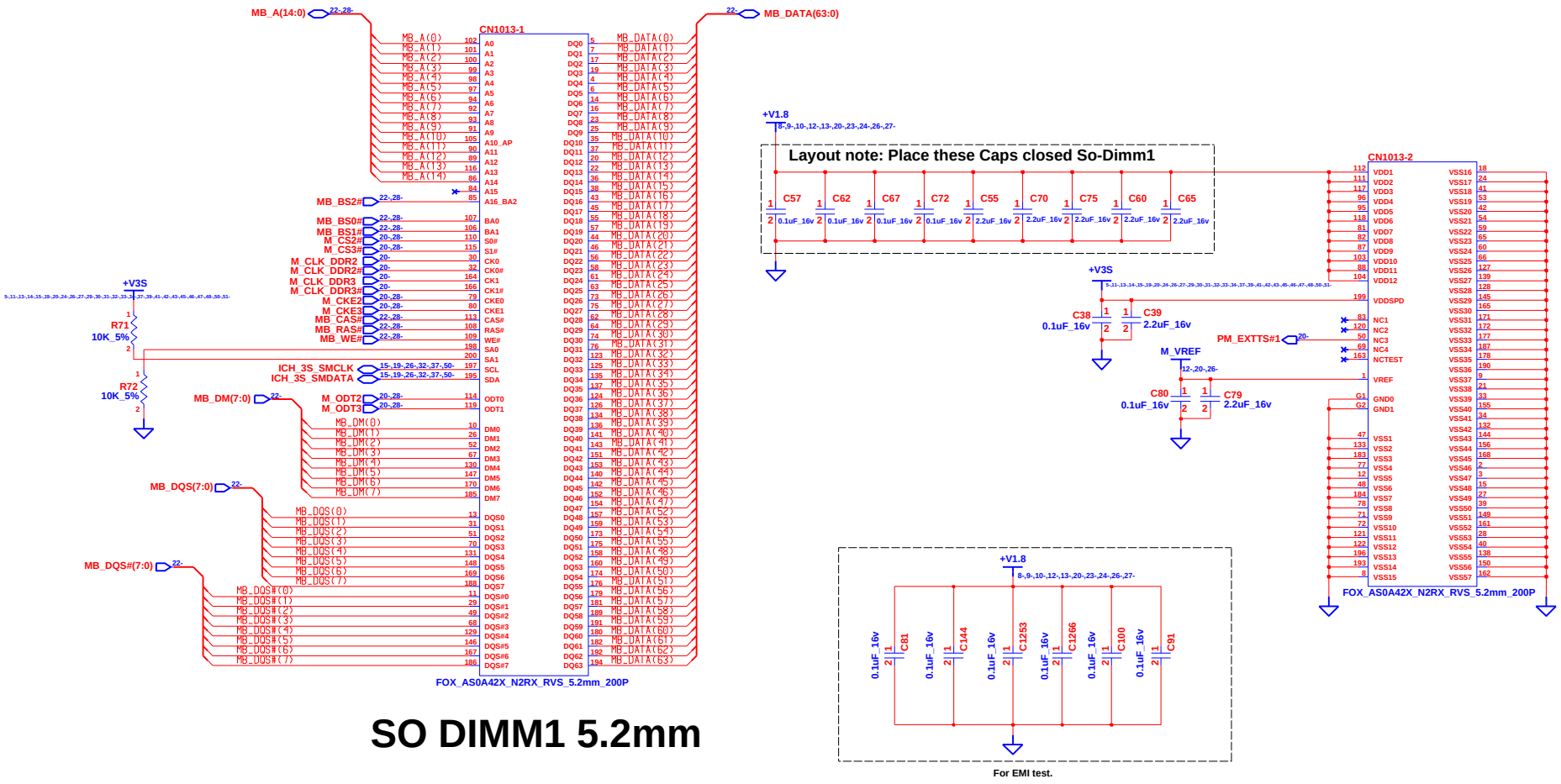

SO DIMM1 5.2mm

INVENTEC			
TITLE S-SERIES - Discrete DDR2 DIMM1			
SIZE A3	CODE CS	DOC. NUMBER 1310A21614	REV AX4
CHANGE by Drawer_Name	17-Feb-2008	SHEET 27 OF 54	

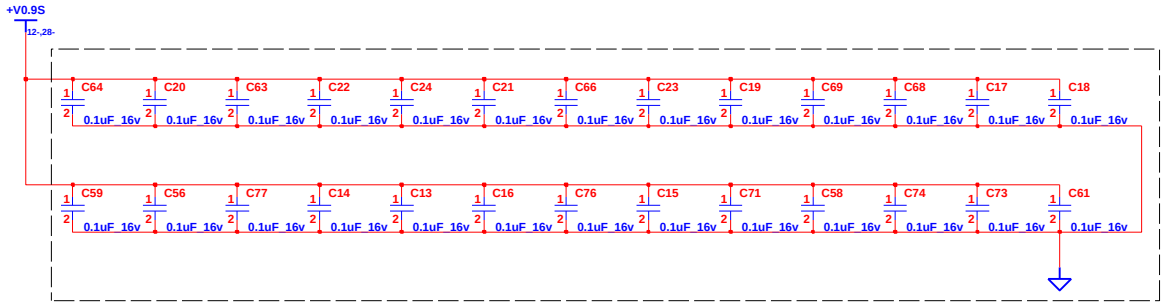

Layout notes : Place one Cap close to every 2 pull up resistor terminated to +V0.9S.

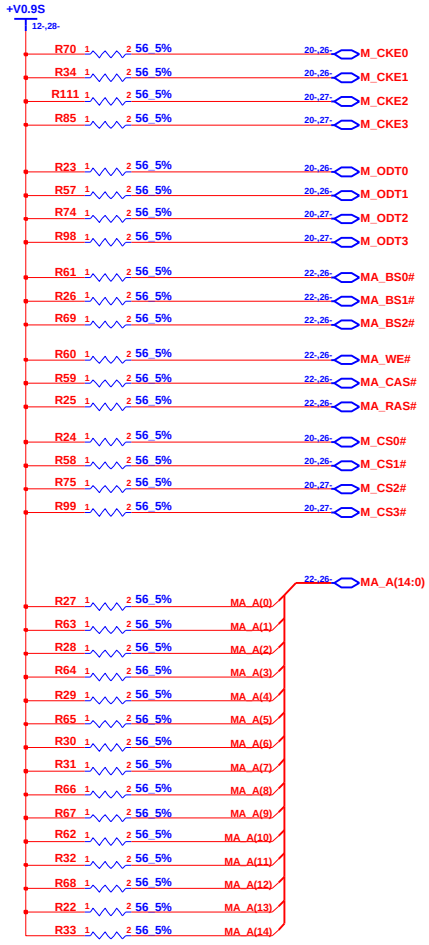

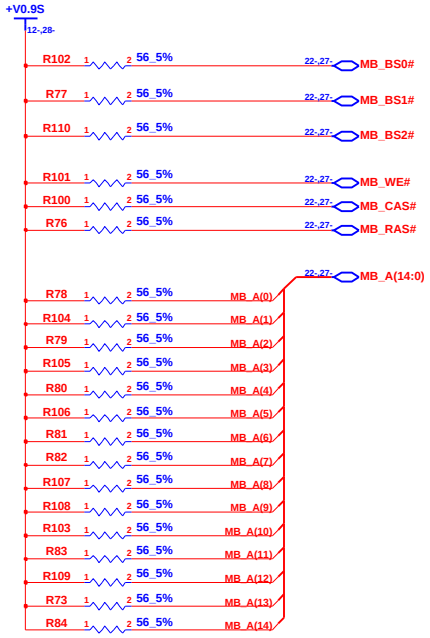

CHANGE by	Drawer_Name	27-Sep-2003	

INVENTEC

TITLE: **S-SERIES - Discrete**
DDR2 Damping

SIZE	CODE	DOC. NUMBER	REV
A3	CS	1310A21614	A01

SHEET 28 OF 54

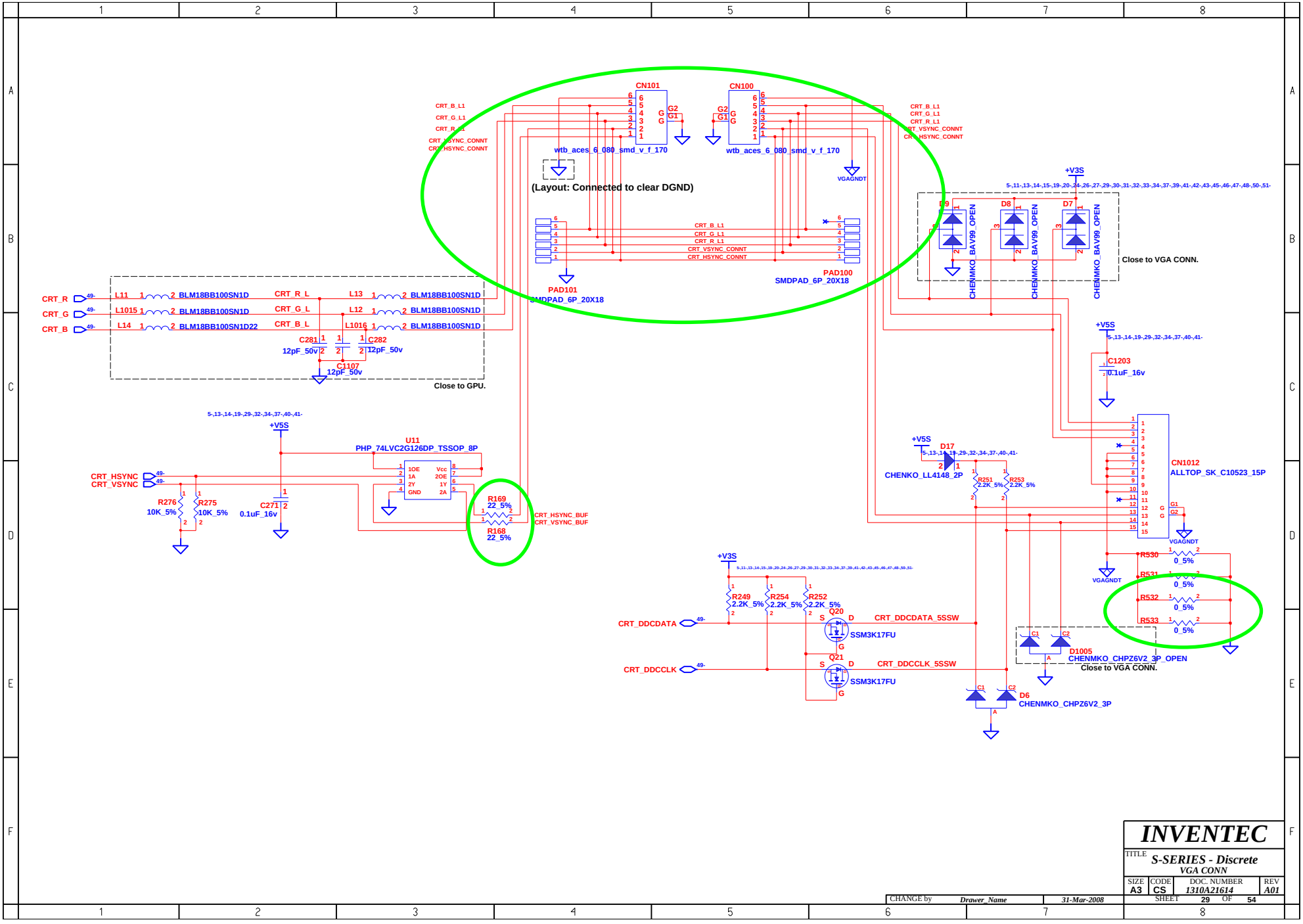
CN101
CN100
wtb_aces_6_080_smd_v_f_170
(Layout: Connected to clear DGND)
VGAGNDT
PAD101
SMDPAD_6P_20X18
PAD100
SMDPAD_6P_20X18
CRT_B_L1
CRT_G_L1
CRT_R_L1
CRT_VSYNC_CONNT
CRT_HSYNC_CONNT
+V3S
D9
D8
D7
CHENMKO_BAV99_OPEN
Close to VGA CONN.
CRT_R
CRT_G
CRT_B
L11 BLM18BB100SN1D
L1015 BLM18BB100SN1D
L14 BLM18BB100SN1D22
L13 BLM18BB100SN1D
L12 BLM18BB100SN1D
L1016 BLM18BB100SN1D
CRT_R_L
CRT_G_L
CRT_B_L
C281 12pF_50v
C282 12pF_50v
C1107 12pF_50v
Close to GPU.
+V5S
C1203 0.1uF_16v
CN1012 ALLTOP_SK_C10523_15P
U11 PHP_74LVC2G126DP_TSSOP_8P
CRT_HSYNC
CRT_VSYNC
R276 10K_5%
R275 10K_5%
C271 0.1uF_16v
R169 22_5%
R168 22_5%
CRT_HSYNC_BUF
CRT_VSYNC_BUF
D17 CHENKO_LL4148_2P
R251 2.2K_5%
R253 2.2K_5%
R530 0_5%
R531 0_5%
R532 0_5%
R533 0_5%
R249 2.2K_5%
R254 2.2K_5%
R252 2.2K_5%
Q20 SSM3K17FU
Q21 SSM3K17FU
CRT_DDCDATA
CRT_DDCCLK
CRT_DDCDATA_5SSW
CRT_DDCCLK_5SSW
D1005 CHENMKO_CHPZ6V2_3P_OPEN
Close to VGA CONN.
D6 CHENMKO_CHPZ6V2_3P
INVENTEC
TITLE S-SERIES - Discrete
VGA CONN
SIZE A3
CODE CS
DOC. NUMBER 1310A21614
REV A01
SHEET 29 OF 54
CHANGE by Drawer_Name
31-Mar-2008

Place closed to connector

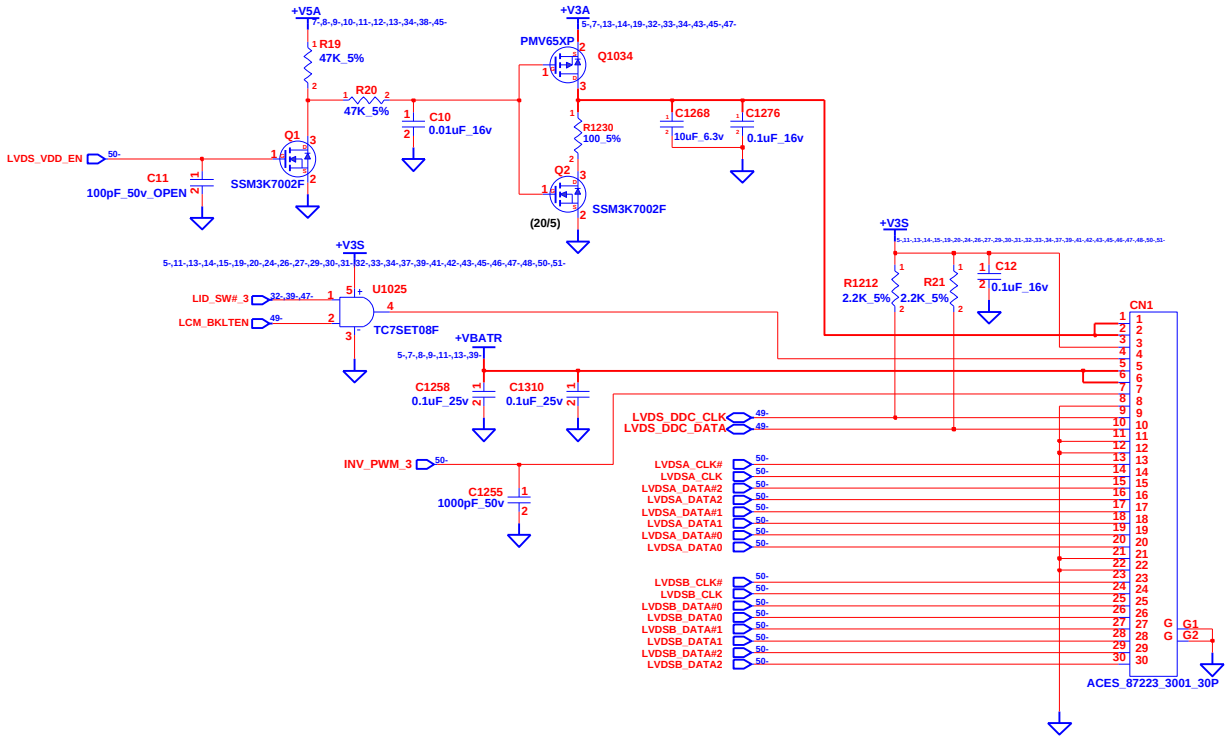

CHANGE by	Drawer_Name	31-Mar-2008	

INVENTEC

TITLE *S-SERIES - Discrete*
LCM CONN

SIZE	CODE	DOC. NUMBER	REV
A3	CS	1310A21614	A01

SHEET 30 OF 54

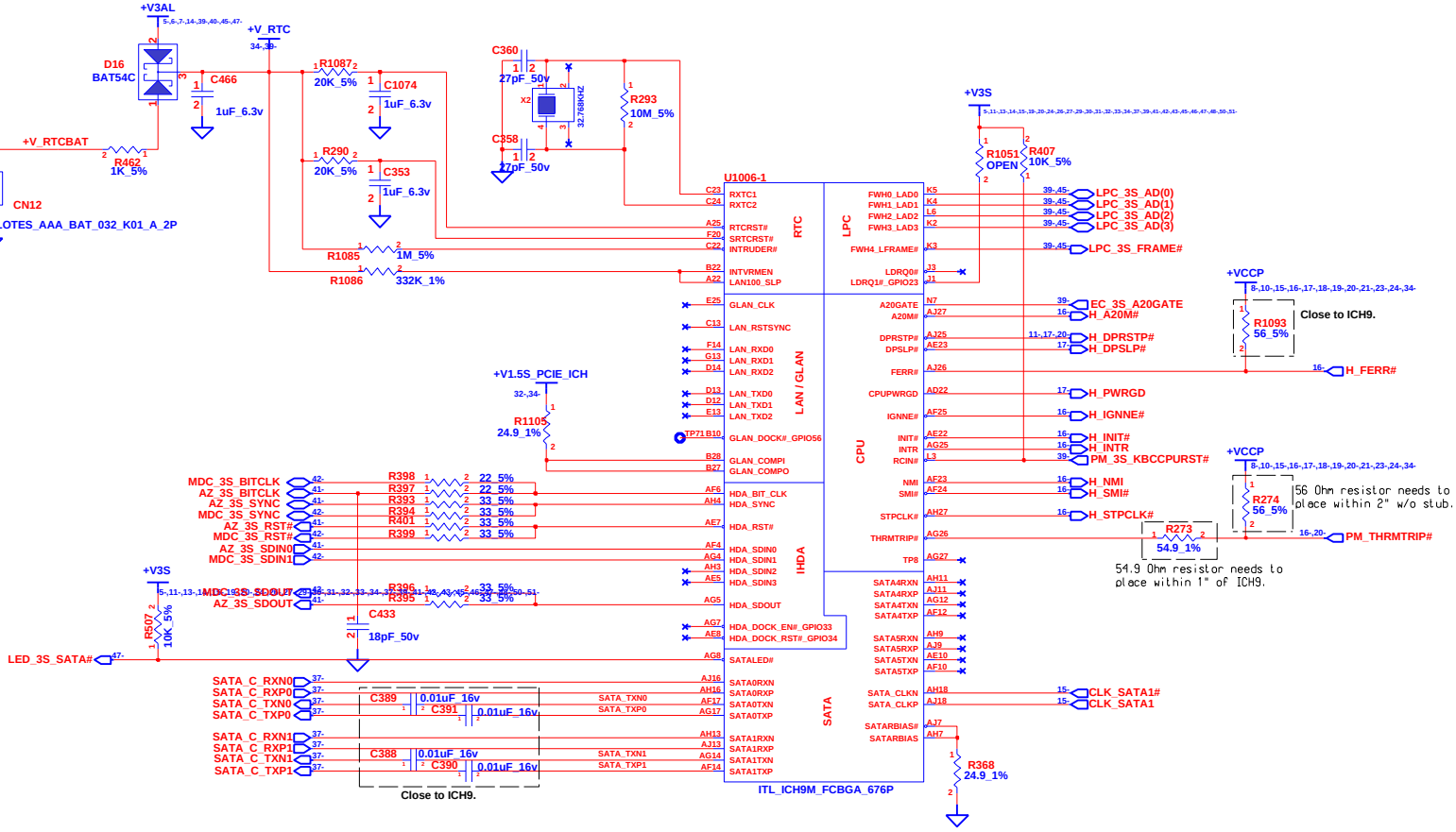

CHANGE by	Drawer_Name	31-Mar-2008	

INVENTEC

TITLE **S-SERIES - Discrete**

S/B ICH9-1

SIZE	CODE	DOC. NUMBER	REV
A3	CS	1310A21614	A01

SHEET 31 OF 54

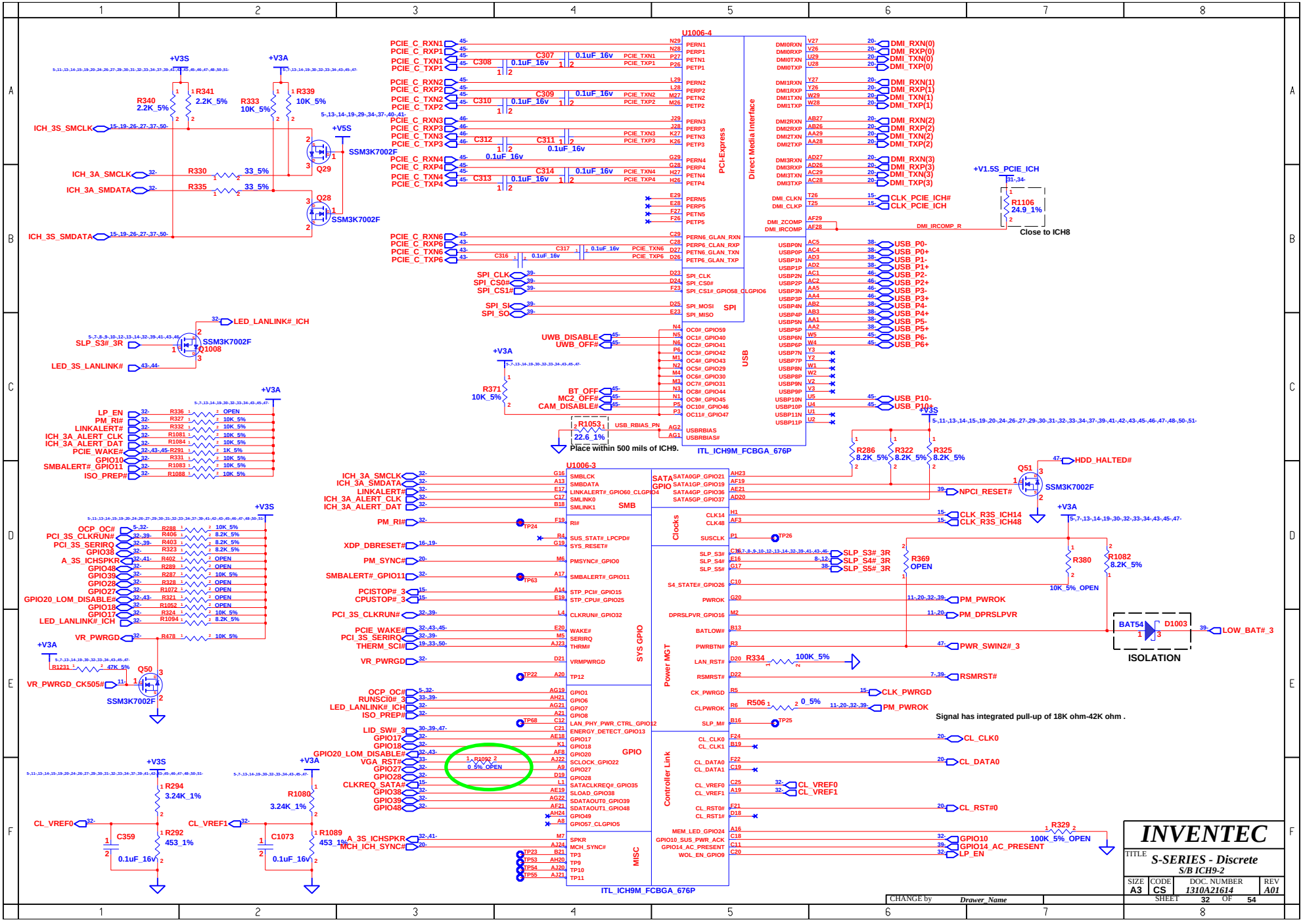
U1006-4
PCI-Express
Direct Media Interface
USB
SPI
ITL_ICH9M_FCBGA_676P
U1006-3
SMB
SYS GPIO
Clocks
Power MGT
GPIO
Controller Link
MISC
ITL_ICH9M_FCBGA_676P
Place within 500 mils of ICH9.
Close to ICH8
ISOLATION
Signal has integrated pull-up of 18K ohm-42K ohm .
INVENTEC
S-SERIES - Discrete
S/B ICH9-2
SIZE A3
CODE CS
DOC. NUMBER 1310A21614
REV A01
SHEET 32 OF 54
CHANGE by Drawer_Name

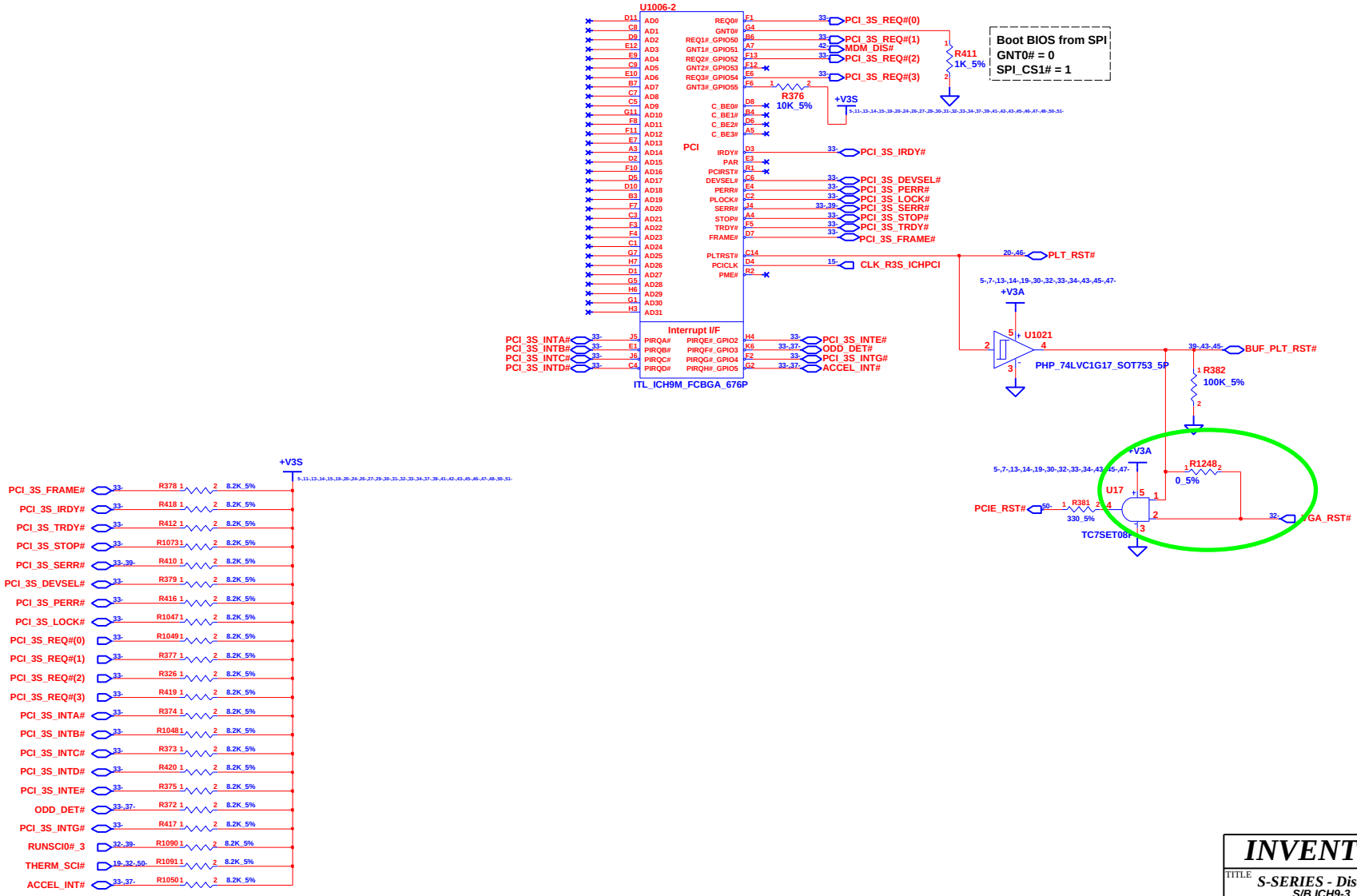

INVENTEC

TITLE
S-SERIES - Discrete
S/B ICH9-3

SIZE	CODE	DOC. NUMBER	REV
A3	CS	1310A21614	A01

SHEET 33 OF 54

CHANGE by Drawer_Name 31-Mar-2008

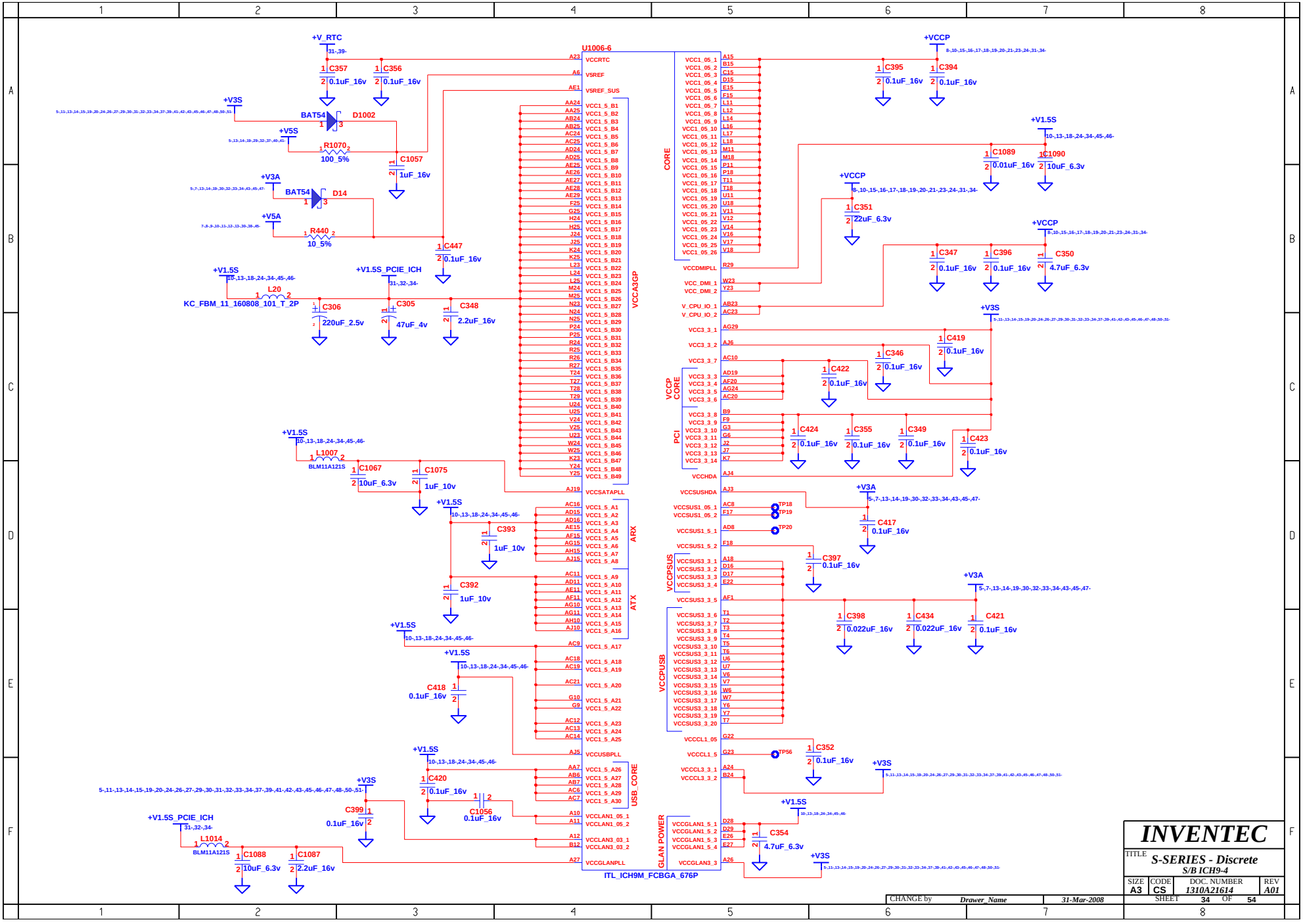
U1006-6
ITL_ICH9M_FCBGA_676P
CORE
VCCA3GP
ARX
ATX
USB_CORE
VCCP CORE
PCI
VCCPSUS
VCCPUSB
GLAN POWER
+V_RTC
+V3S
+V5S
+V3A
+V5A
+V1.5S
+V1.5S_PCIE_ICH
+VCCP
BAT54
D1002
D14
R1070
100_5%
R440
10_5%
C1057
1uF_16v
C447
0.1uF_16v
C357
C356
0.1uF_16v
L20
KC_FBM_11_160808_101_T_2P
C306
220uF_2.5v
C305
47uF_4v
C348
2.2uF_16v
L1007
BLM11A121S
C1067
10uF_6.3v
C1075
1uF_10v
C393
1uF_10v
C392
1uF_10v
C418
0.1uF_16v
C420
0.1uF_16v
C1056
0.1uF_16v
C399
0.1uF_16v
L1014
C1088
10uF_6.3v
C1087
2.2uF_16v
C395
C394
C1089
0.01uF_16v
C1090
10uF_6.3v
C351
22uF_6.3v
C347
C396
C350
4.7uF_6.3v
C419
0.1uF_16v
C346
0.1uF_16v
C422
0.1uF_16v
C424
C355
C349
C423
C417
C397
C398
0.022uF_16v
C434
0.022uF_16v
C421
0.1uF_16v
C352
C354
4.7uF_6.3v
TP18
TP19
TP20
TP56
INVENTEC
TITLE
S-SERIES - Discrete
S/B ICH9-4
SIZE A3
CODE CS
DOC. NUMBER 1310A21614
REV A01
SHEET 34 OF 54
CHANGE by Drawer_Name
31-Mar-2008

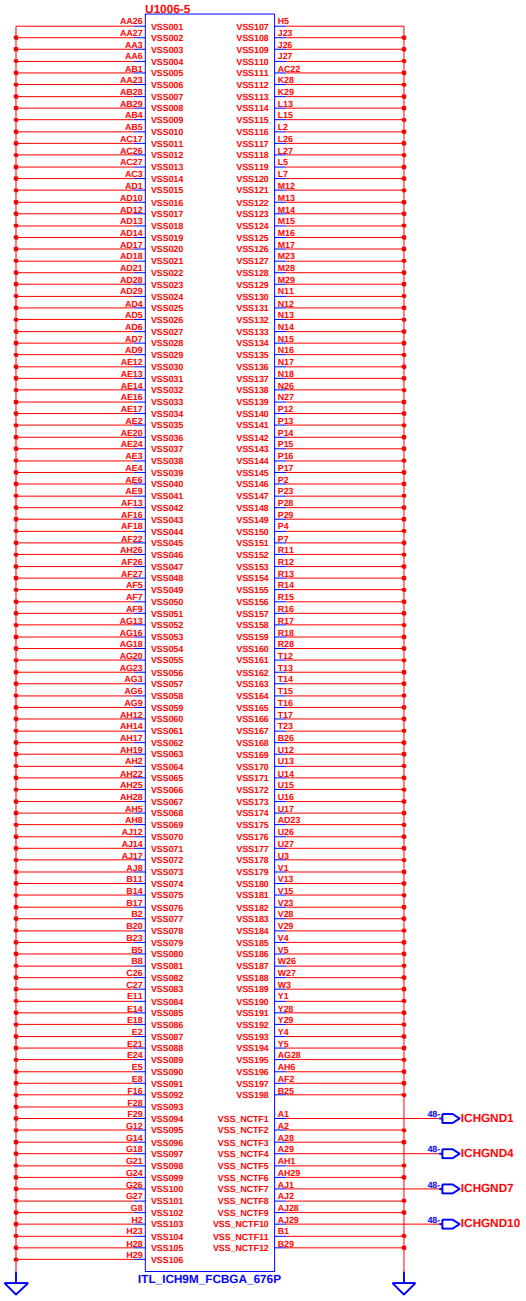

CHANGE by	Drawer_Name	31-Mar-2008	

INVENTEC

TITLE: S-SERIES - Discrete
S/B ICH9-5

SIZE	CODE	DOC. NUMBER	REV
A3	CS	1310A21614	A01

SHEET 35 OF 54

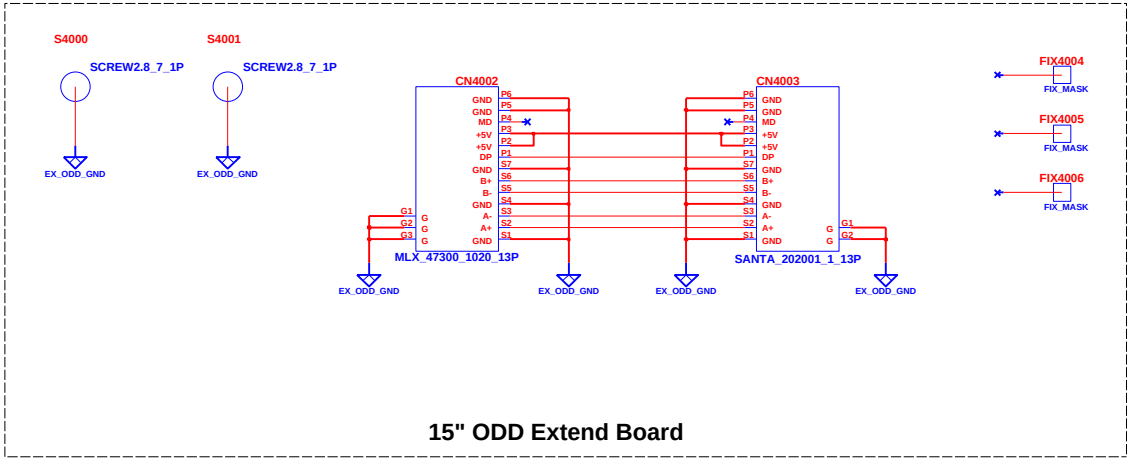

15" ODD Extend Board

CHANGE by	*Drawer_Name*	*31-Mar-2008*	

INVENTEC

TITLE *S-SERIES - Discrete*
15"/17" ODD Extend/B

SIZE	CODE	DOC. NUMBER	REV
A3	CS	*1310A21614*	*A01*

SHEET 36 OF 54

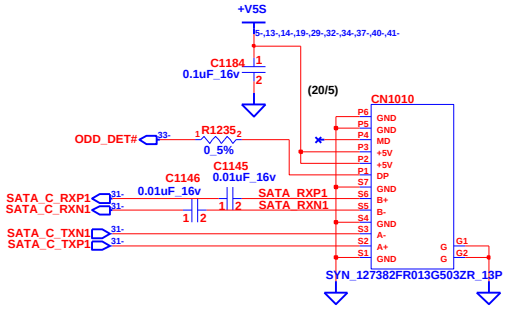

SATA ODD

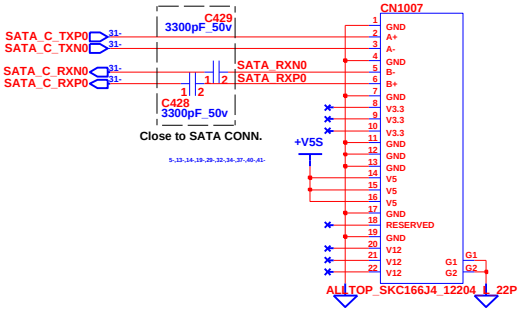

SATA HDD

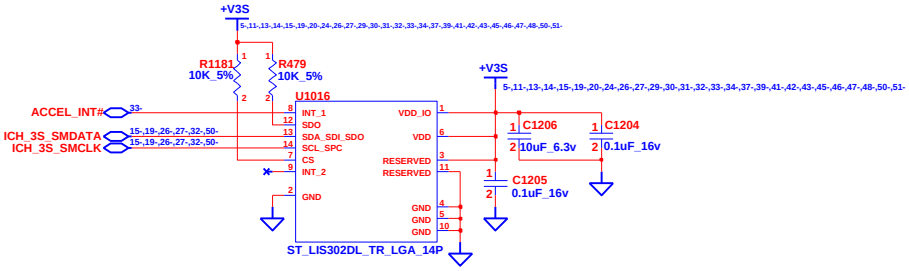

Accelerometer

CHANGE by	Drawer_Name	31-Mar-2008	

INVENTEC

TITLE *S-SERIES - Discrete*
HDD & ODD CONN & Accelerometer

SIZE	CODE	DOC. NUMBER	REV
A3	CS	1310A21614	A01

SHEET 37 OF 54

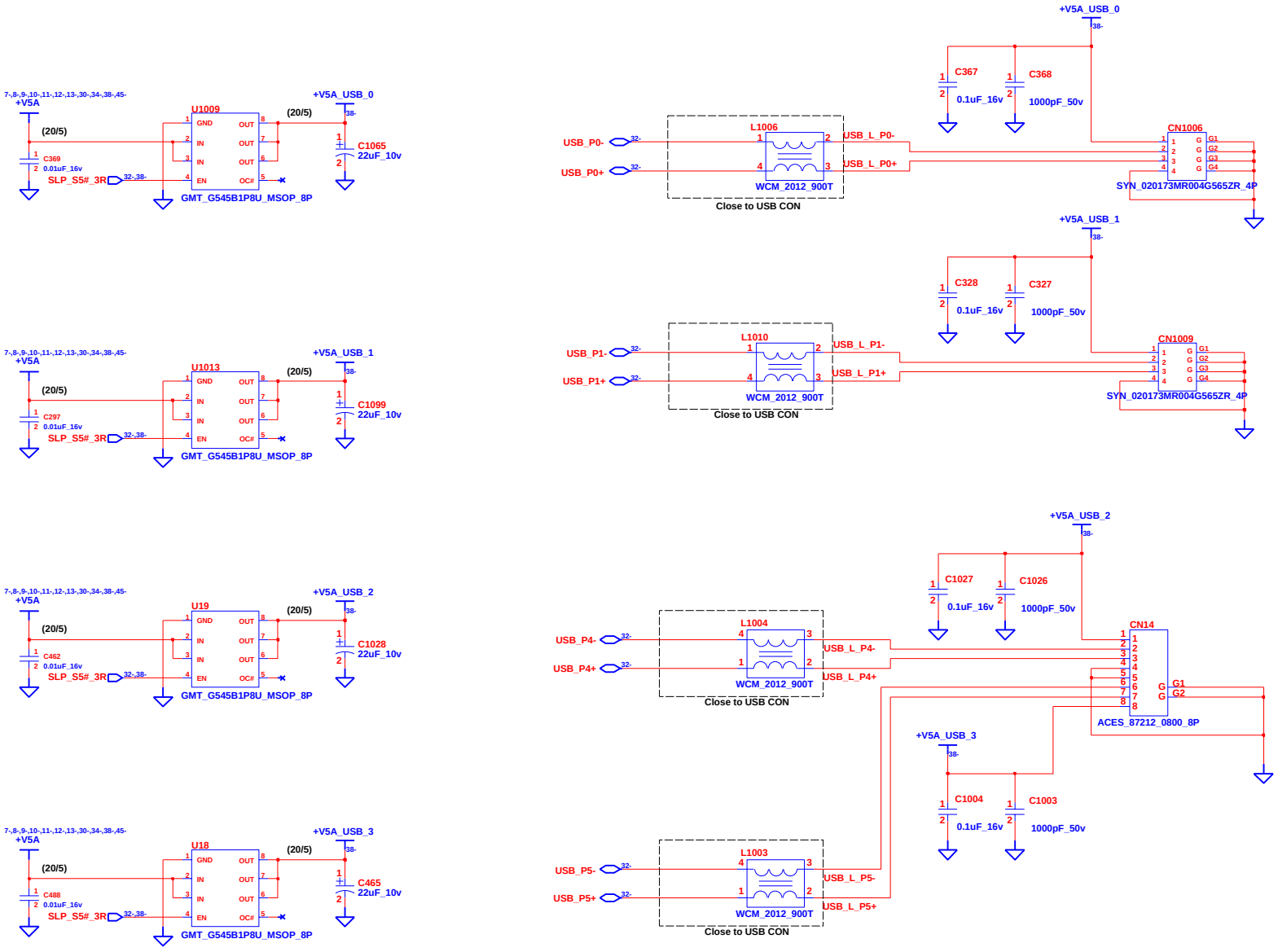

CHANGE by	Drawer_Name	31-Mar-2008	

INVENTEC

TITLE: *S-SERIES - Discrete*
USB CONN

SIZE	CODE	DOC. NUMBER	REV
A3	CS	1310A21614	A01

SHEET 38 OF 54

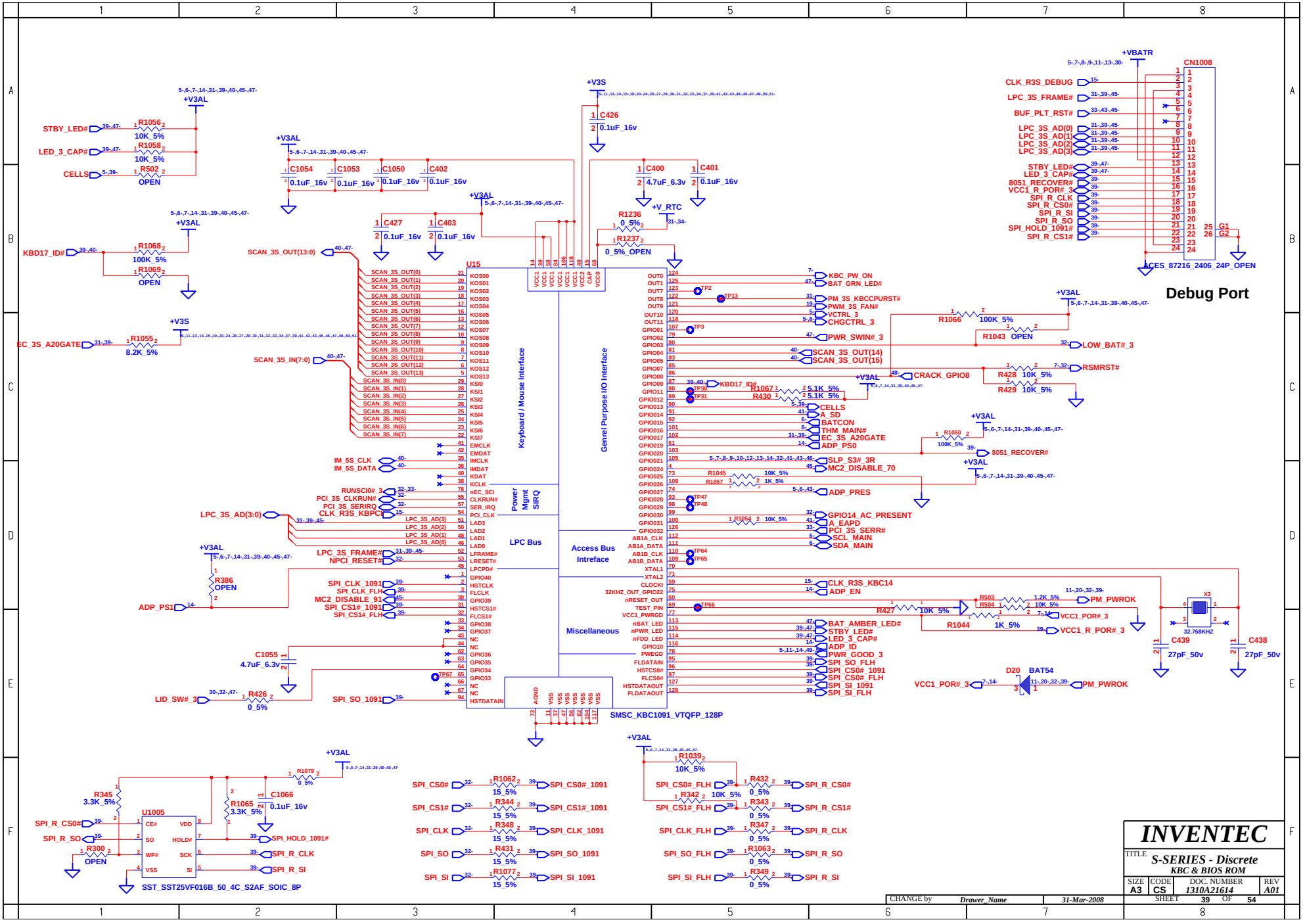
Debug Port
U15
SMSC_KBC1091_VTQFP_128P
Keyboard / Mouse Interface
Power Mgmt SIRQ
LPC Bus
Genrel Purpose I/O Interface
Access Bus Intreface
Miscellaneous
CN1008
ACES_87216_2406_24P_OPEN
U1005
SST_SST25VF016B_50_4C_S2AF_SOIC_8P
X3
32.768KHZ
D20 BAT54
+V3AL
+V3S
+VBATR
+V_RTC
STBY_LED#
LED_3_CAP#
CELLS
KBD17_ID#
EC_3S_A20GATE
SCAN_3S_OUT(13:0)
SCAN_3S_IN(7:0)
LPC_3S_AD(3:0)
ADP_PS1
LID_SW#_3
SPI_SO_1091
SPI_R_CS0#
SPI_R_SO
SPI_HOLD_1091#
SPI_R_CLK
SPI_R_SI
CHANGE by Drawer_Name 31-Mar-2008
INVENTEC
TITLE S-SERIES - Discrete
KBC & BIOS ROM
SIZE A3 CODE CS DOC. NUMBER 1310A21614 REV A01
SHEET 39 OF 54

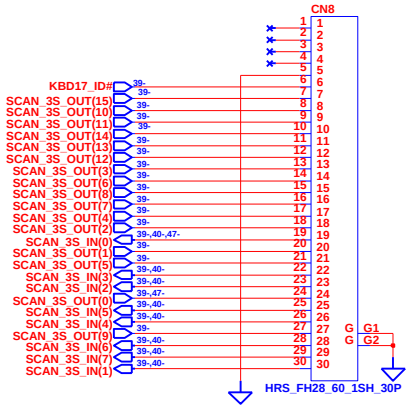

KEYBOARD CONN

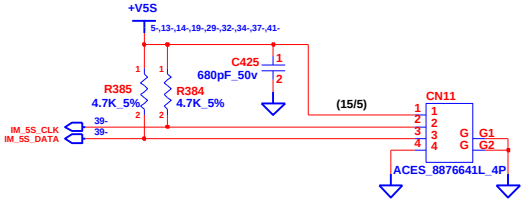

TOUCH PAD CONN

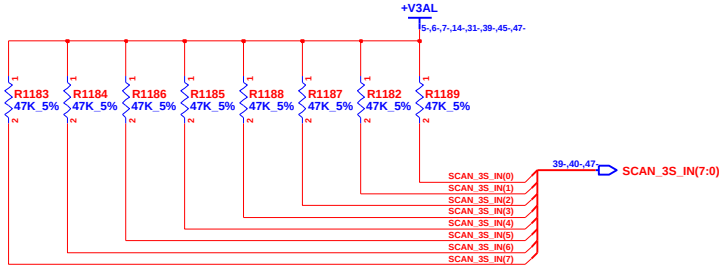

CHANGE by	Drawer_Name	31-Mar-2008	

INVENTEC

TITLE *S-SERIES - Discrete*
Keyboard & TouchPad CONN

SIZE	CODE	DOC. NUMBER	REV
A3	CS	1310A21614	A01

SHEET 40 OF 54

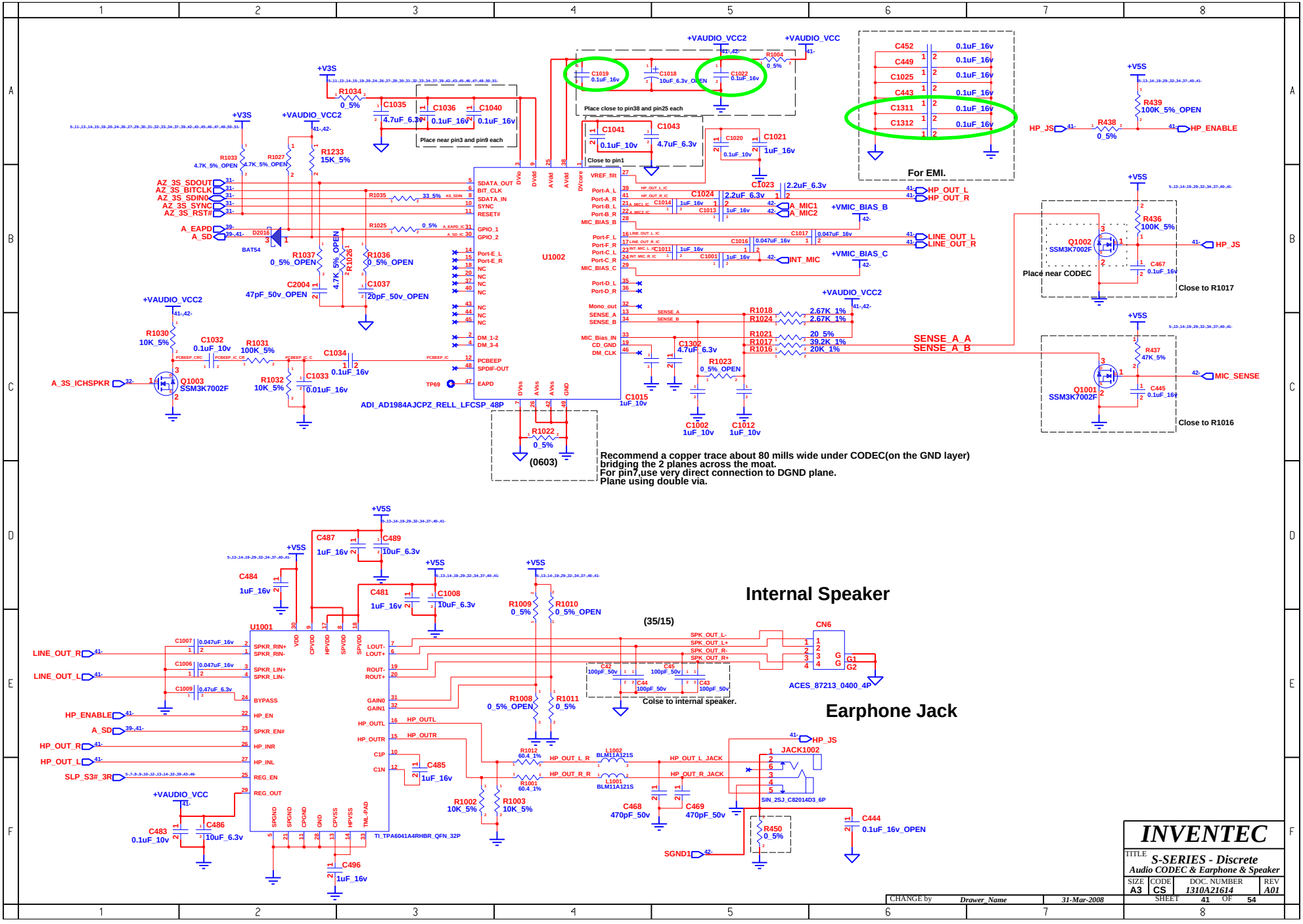
U1002
ADI_AD1984AJCPZ_RELL_LFCSP_48P
Place near pin3 and pin9 each
Place close to pin38 and pin25 each
Close to pin1
For EMI.
Place near CODEC
Close to R1017
Close to R1016
Recommend a copper trace about 80 mills wide under CODEC(on the GND layer)
bridging the 2 planes across the moat.
For pin7,use very direct connection to DGND plane.
Plane using double via.
(0603)
Internal Speaker
(35/15)
Colse to internal speaker.
Earphone Jack
U1001
TI_TPA6041A4RHBR_QFN_32P
CN6
ACES_87213_0400_4P
JACK1002
SIN_2SJ_C82014D3_6P
INVENTEC
S-SERIES - Discrete
Audio CODEC & Earphone & Speaker
SIZE A3
CODE CS
DOC. NUMBER 1310A21614
REV A01
SHEET 41 OF 54
CHANGE by Drawer_Name
31-Mar-2008

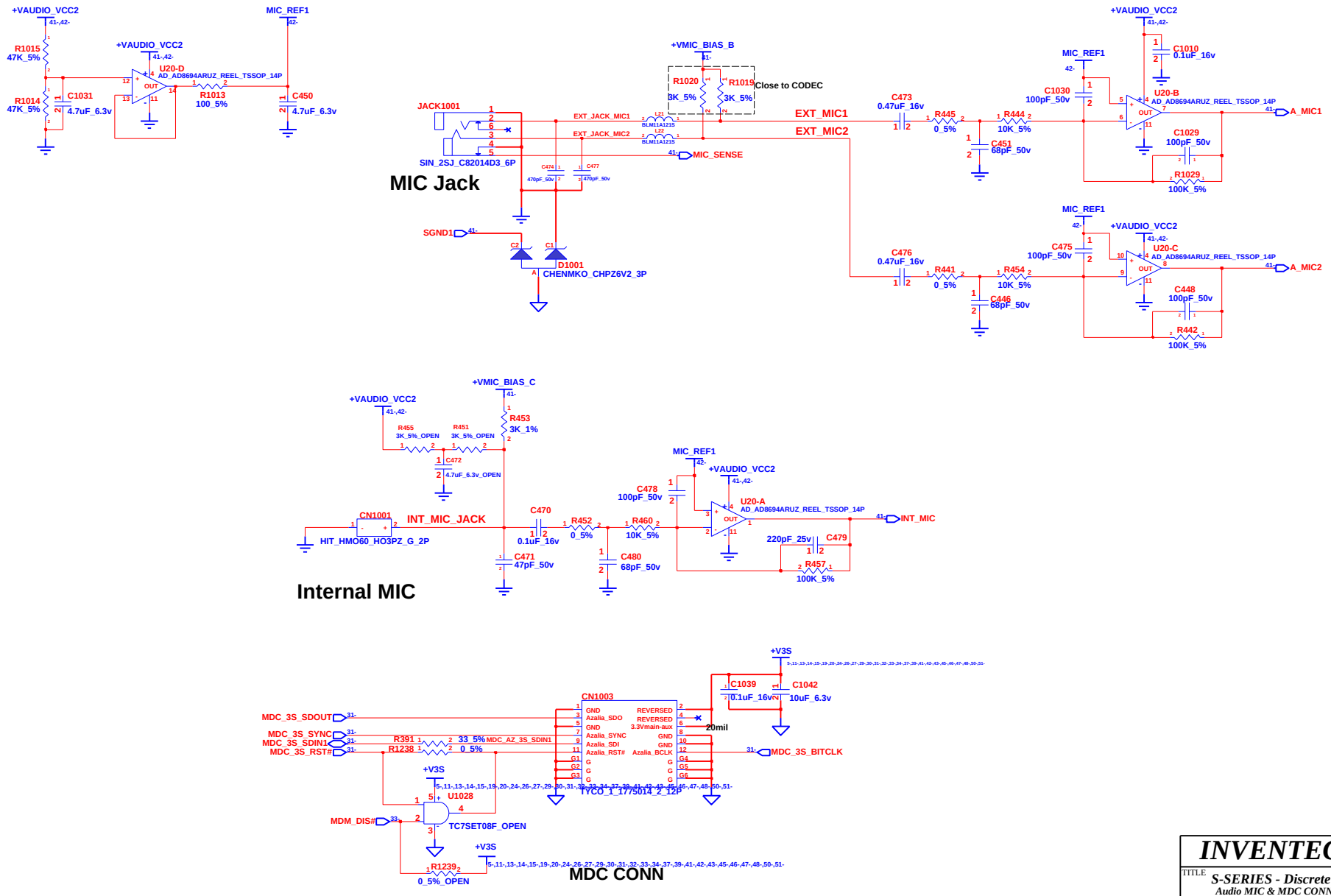

INVENTEC			
TITLE	S-SERIES - Discrete Audio MIC & MDC CONN		
SIZE A3	CODE CS	DOC. NUMBER 1310A21614	REV A01
CHANGE by Drawer_Name	31-Mar-2008	SHEET 42 OF 54	

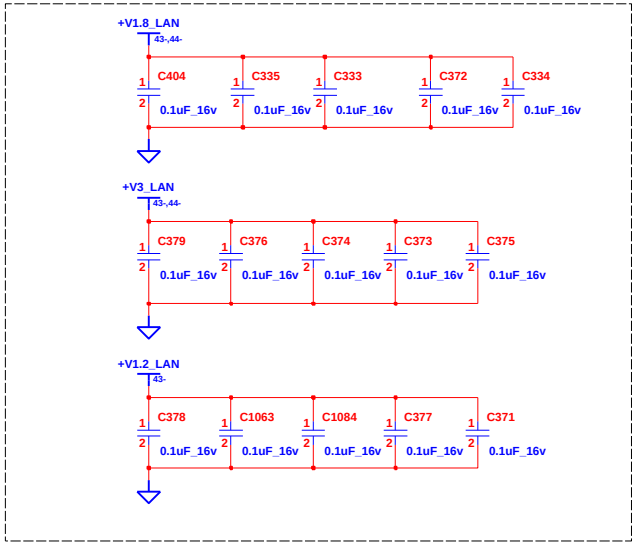

Place bypass cap as close as possible with every power pin.

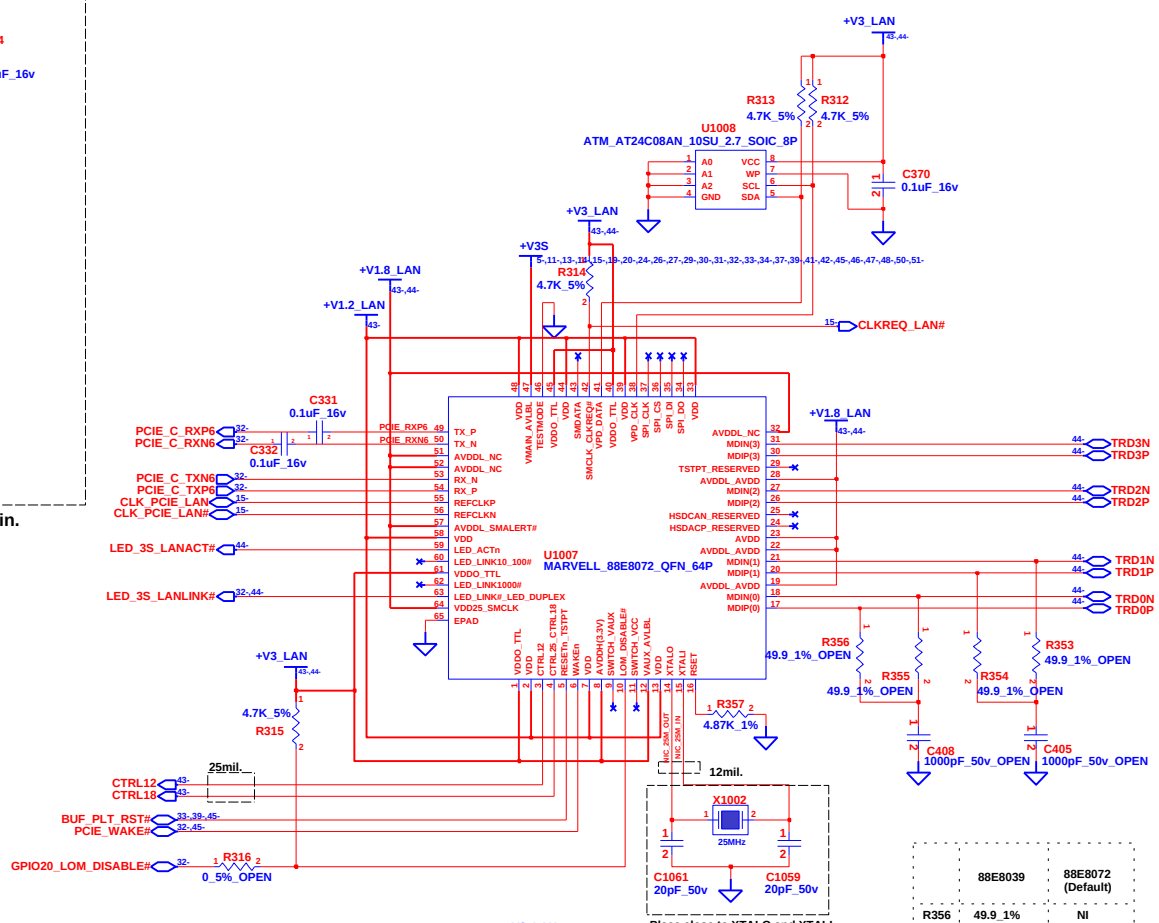

	88E8039	88E8072 (Default)
R356	49.9_1%	NI
R355	49.9_1%	NI
R354	49.9_1%	NI
R353	49.9_1%	NI
C408	1000p_50V	NI
C405	1000p_50V	NI
R357	2K_1%	4.87K_1%

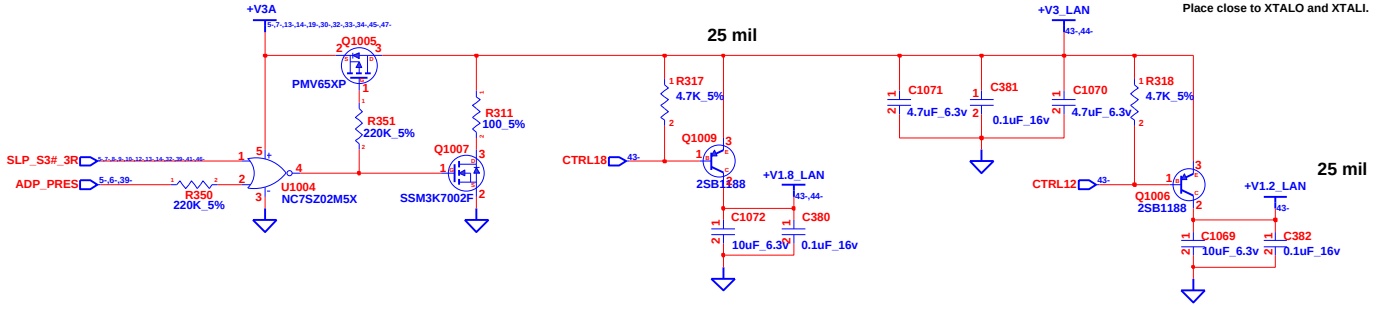

INVENTEC

TITLE S-SERIES - Discrete
Giga LAN Controller

SIZE	CODE	DOC. NUMBER	REV
A3	CS	1310A21614	A01

SHEET 43 OF 54

CHANGE by Drawer_Name 31-Mar-2008

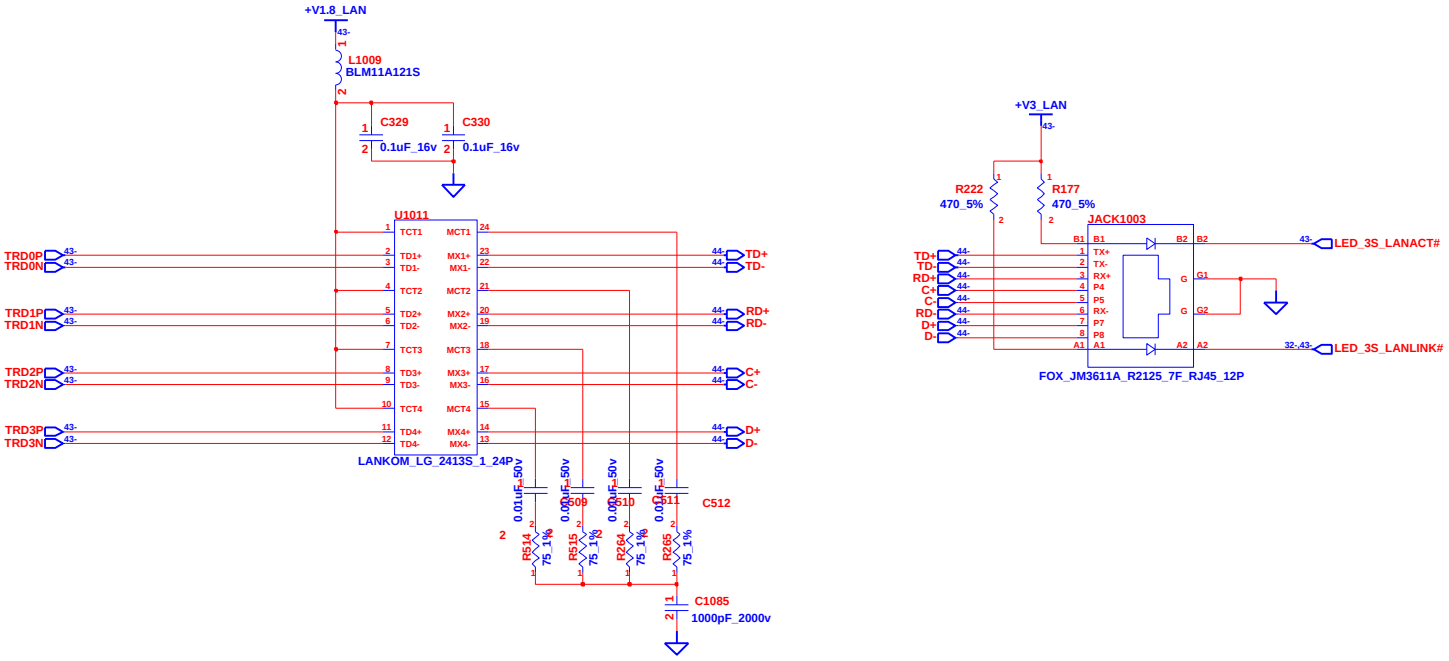

CHANGE by	Drawer_Name	31-Mar-2008	

INVENTEC

TITLE: *S-SERIES - Discrete*
Magnetic & RJ45 CONN

SIZE	CODE	DOC. NUMBER	REV
A3	CS	1310A21614	A01

SHEET 44 OF 54

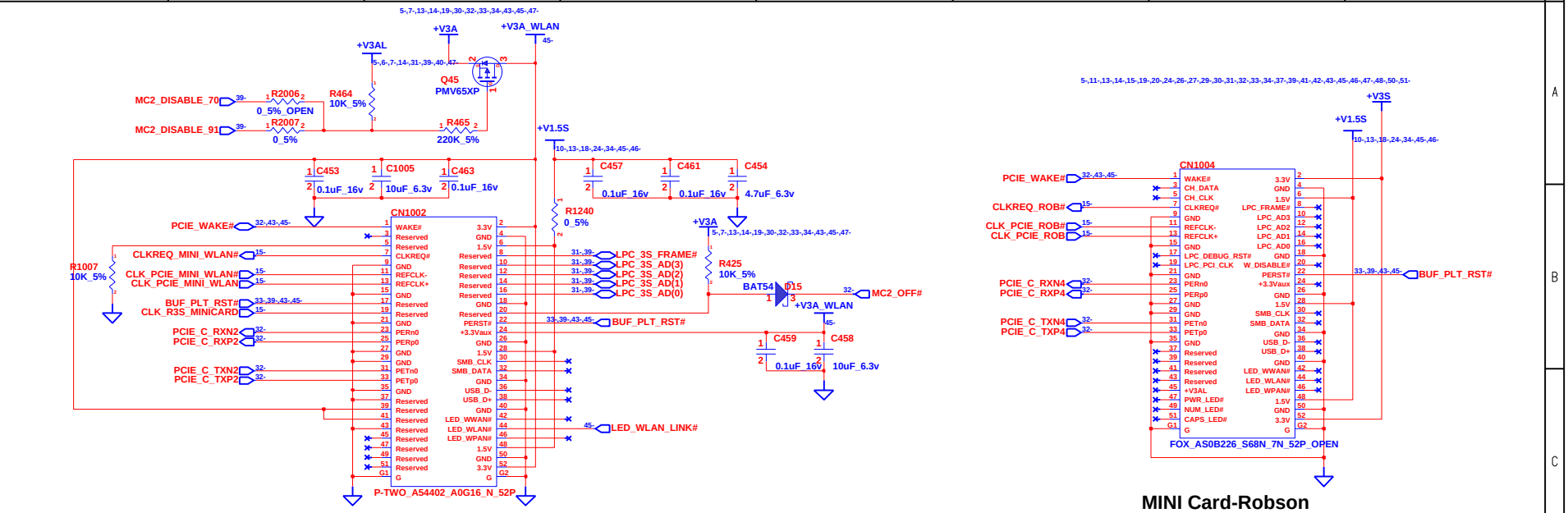

INVENTEC

TITLE S-SERIES - Discrete

Mini Card(WLAN/Robson)/BT/UWB/Web-CAM

SIZE	CODE	DOC. NUMBER	REV
A3	CS	1310A21614	A01

CHANGE by Drawer_Name 31-Mar-2008 SHEET 45 OF 54

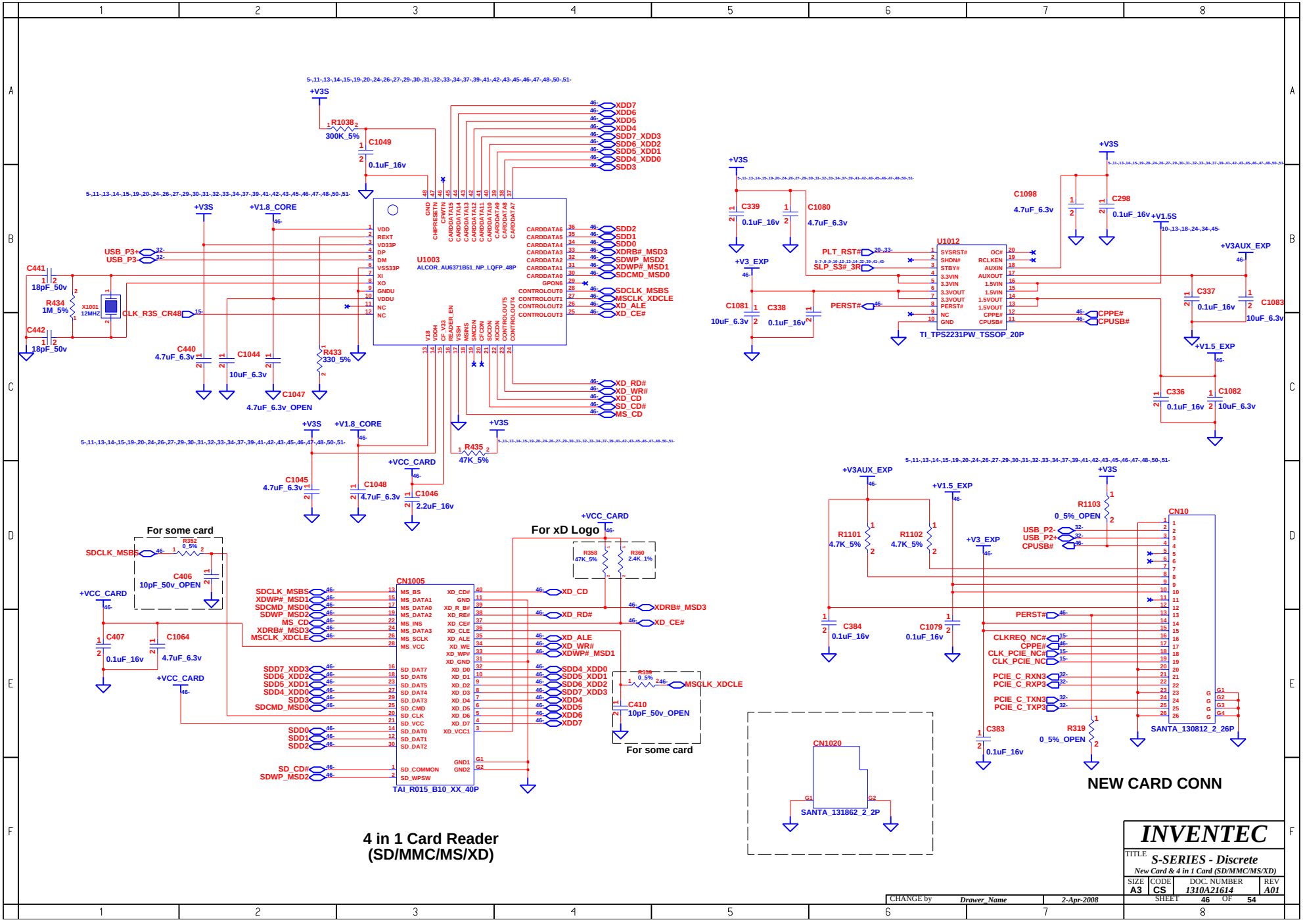
U1003
ALCOR_AU6371B51_NP_LQFP_48P
CN1005
TAI_R015_B10_XX_40P
For some card
For xD Logo
For some card
4 in 1 Card Reader
(SD/MMC/MS/XD)
U1012
TI_TPS2231PW_TSSOP_20P
CN10
SANTA_130812_2_26P
NEW CARD CONN
CN1020
SANTA_131862_2_2P
INVENTEC
TITLE
S-SERIES - Discrete
New Card & 4 in 1 Card (SD/MMC/MS/XD)
SIZE A3
CODE CS
DOC. NUMBER 1310A21614
REV A01
SHEET 46 OF 54
CHANGE by Drawer_Name
2-Apr-2008

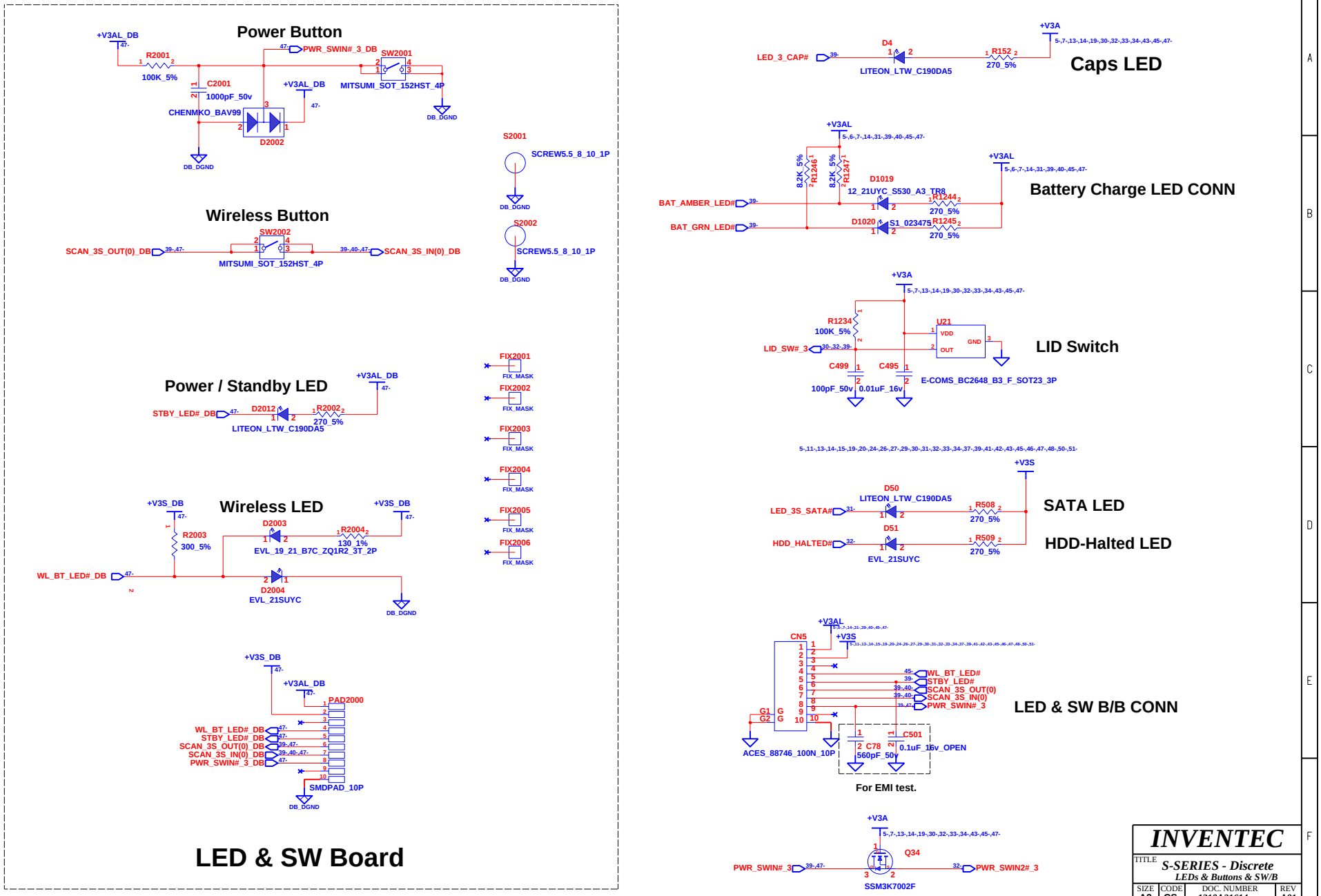
Power Button
+V3AL_DB
R2001
100K_5%
PWR_SWIN#_3_DB
SW2001
MITSUMI_SOT_152HST_4P
C2001
1000pF_50v
CHENMKO_BAV99
D2002
DB_DGND
S2001
SCREW5.5_8_10_1P
S2002
Wireless Button
SW2002
SCAN_3S_OUT(0)_DB
SCAN_3S_IN(0)_DB
Power / Standby LED
STBY_LED#_DB
D2012
R2002
270_5%
LITEON_LTW_C190DA5
FIX2001
FIX2002
FIX2003
FIX2004
FIX2005
FIX2006
FIX_MASK
Wireless LED
+V3S_DB
R2003
300_5%
D2003
R2004
130_1%
EVL_19_21_B7C_ZQ1R2_3T_2P
WL_BT_LED#_DB
D2004
EVL_21SUYC
PAD2000
WL_BT_LED#_DB
STBY_LED#_DB
SCAN_3S_OUT(0)_DB
SCAN_3S_IN(0)_DB
PWR_SWIN#_3_DB
SMDPAD_10P
LED & SW Board
Caps LED
+V3A
LED_3_CAP#
D4
LITEON_LTW_C190DA5
R152
270_5%
Battery Charge LED CONN
+V3AL
BAT_AMBER_LED#
BAT_GRN_LED#
R1246
8.2K_5%
R1247
8.2K_5%
D1019
12_21UYC_S530_A3_TR8
R1244
270_5%
D1020
S1_023475
R1245
270_5%
LID Switch
R1234
100K_5%
LID_SW#_3
U21
VDD
OUT
GND
C499
100pF_50v
C495
0.01uF_16v
E-COMS_BC2648_B3_F_SOT23_3P
SATA LED
HDD-Halted LED
LED_3S_SATA#
D50
LITEON_LTW_C190DA5
R508
270_5%
HDD_HALTED#
D51
EVL_21SUYC
R509
270_5%
LED & SW B/B CONN
CN5
WL_BT_LED#
STBY_LED#
SCAN_3S_OUT(0)
SCAN_3S_IN(0)
PWR_SWIN#_3
ACES_88746_100N_10P
C78
560pF_50v
C501
0.1uF_16v_OPEN
For EMI test.
Q34
SSM3K7002F
PWR_SWIN#_3
PWR_SWIN2#_3
INVENTEC
TITLE
S-SERIES - Discrete
LEDs & Buttons & SW/B
SIZE A3
CODE CS
DOC. NUMBER 1310A21614
REV A01
SHEET 47 OF 54
CHANGE by Drawer_Name
31-Mar-2008

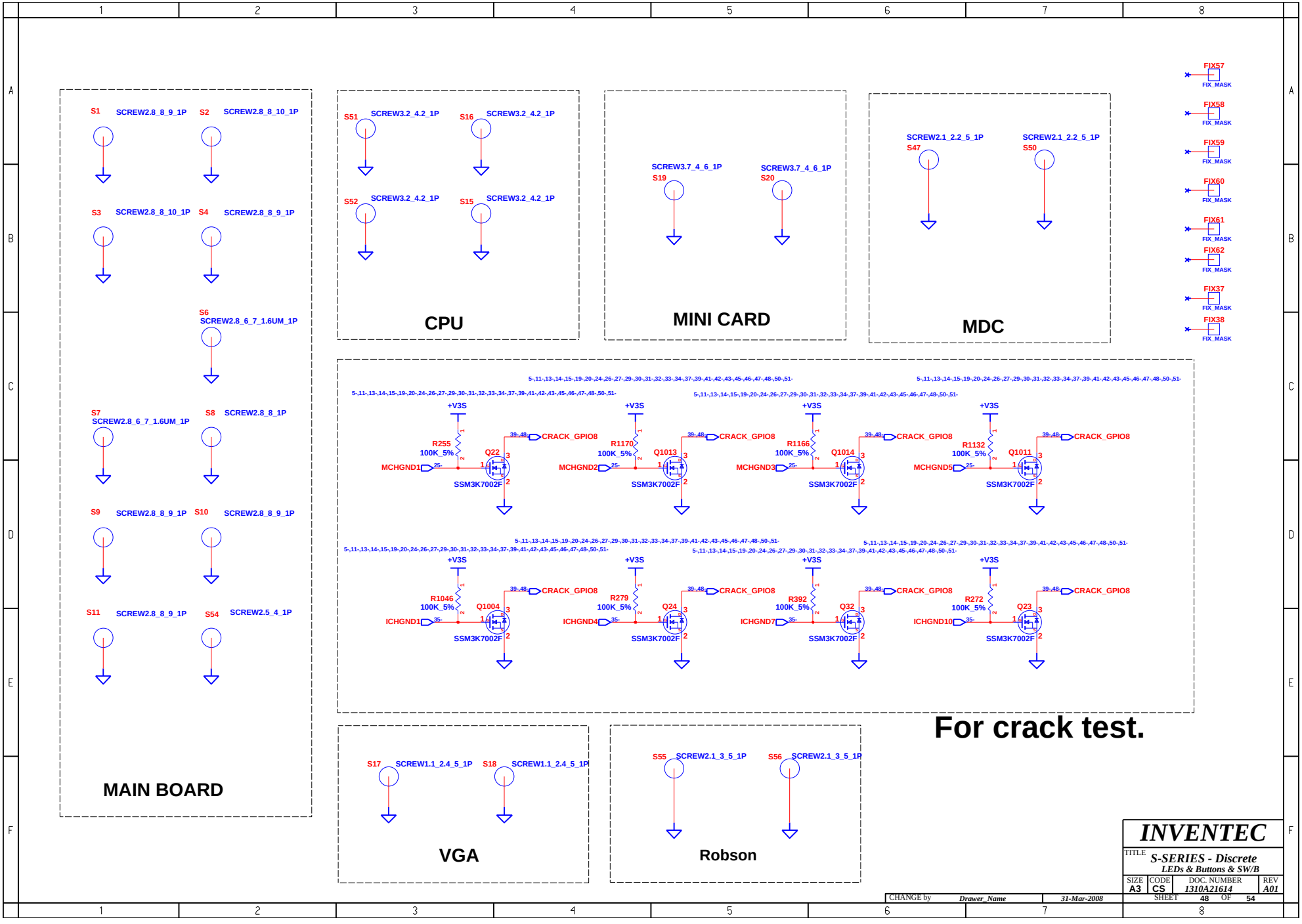
MAIN BOARD
S1 SCREW2.8_8_9_1P
S2 SCREW2.8_8_10_1P
S3 SCREW2.8_8_10_1P
S4 SCREW2.8_8_9_1P
S6 SCREW2.8_6_7_1.6UM_1P
S7 SCREW2.8_6_7_1.6UM_1P
S8 SCREW2.8_8_1P
S9 SCREW2.8_8_9_1P
S10 SCREW2.8_8_9_1P
S11 SCREW2.8_8_9_1P
S54 SCREW2.5_4_1P
CPU
S51 SCREW3.2_4.2_1P
S16 SCREW3.2_4.2_1P
S52 SCREW3.2_4.2_1P
S15 SCREW3.2_4.2_1P
MINI CARD
S19 SCREW3.7_4_6_1P
S20 SCREW3.7_4_6_1P
MDC
S47 SCREW2.1_2.2_5_1P
S50 SCREW2.1_2.2_5_1P
FIX57 FIX_MASK
FIX58 FIX_MASK
FIX59 FIX_MASK
FIX60 FIX_MASK
FIX61 FIX_MASK
FIX62 FIX_MASK
FIX37 FIX_MASK
FIX38 FIX_MASK
+V3S
R255 100K_5%
R1170 100K_5%
R1166 100K_5%
R1132 100K_5%
R1046 100K_5%
R279 100K_5%
R392 100K_5%
R272 100K_5%
MCHGND1
MCHGND2
MCHGND3
MCHGND5
ICHGND1
ICHGND4
ICHGND7
ICHGND10
Q22
Q1013
Q1014
Q1011
Q1004
Q24
Q32
Q23
SSM3K7002F
CRACK_GPIO8
For crack test.
VGA
S17 SCREW1.1_2.4_5_1P
S18 SCREW1.1_2.4_5_1P
Robson
S55 SCREW2.1_3_5_1P
S56 SCREW2.1_3_5_1P
INVENTEC
TITLE S-SERIES - Discrete
LEDs & Buttons & SW/B
SIZE A3
CODE CS
DOC. NUMBER 1310A21614
REV A01
SHEET 48 OF 54
CHANGE by Drawer_Name
31-Mar-2008

STRAPS	PIN	Description of default settings	
TX_PWRS_ENB	GPIO0	PCIE full TX output swing.	1
TX_DEEMPH_EN	GPIO1	PCIE transmitter de-emphasis enabled.	1
BIF_DEBUG_ACCESS	GPIO4	Debug signals muxed out.	0
ROMIDCFG(0:3)	GPIO[11:13,9]	Memory aperture type	X X X X

X = DESIGN DEPENDANT

0 = DO NOT INSTALL RESISTOR

1 = INSTALL 10K RESISTOR

Table 1

GPIO_13	GPIO_12	GPIO_11	For DIS-GDDR2	
0	0	0	128M memory aperture	(Default)
0	0	1	256M memory aperture	
1	1	0	reserved	

Table 2

For DIS-GDDR2				
MEM_ID3	MEM_ID2	MEM_ID1	MEM_ID0	vendor
0	0	0	1	samsung (128MB)
1	0	0	1	samsung (256MB)
0	1	0	0	hynix (128MB) (Default)
1	1	0	0	hynix (256MB)
0	0	1	0	Qimonda(128M)
1	0	1	0	Qimonda(256M)

POW_SW1	POW_SW0	+VDD_CORE
0	0	1.1V
0	1	1.0V
1	0	0.9V

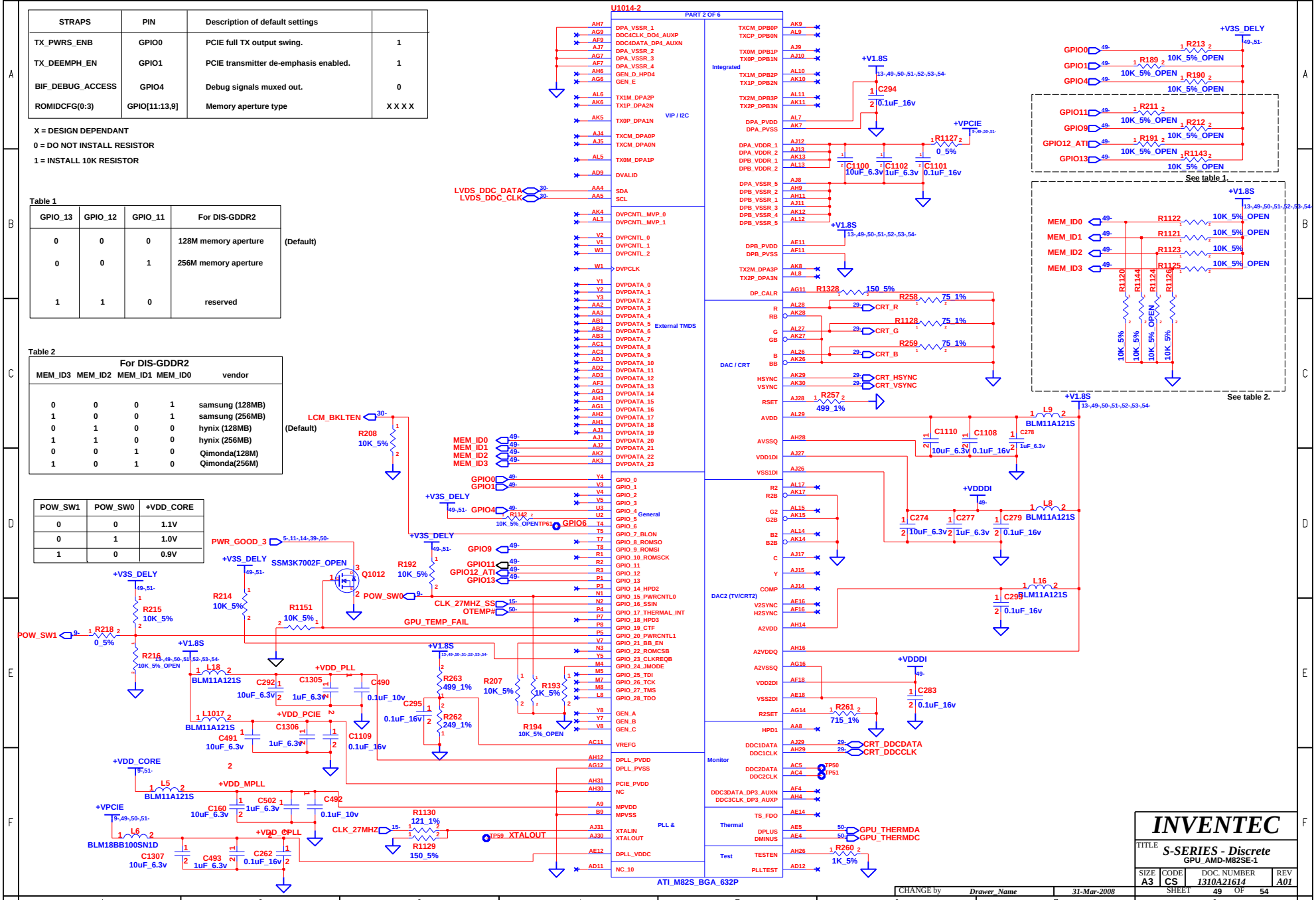

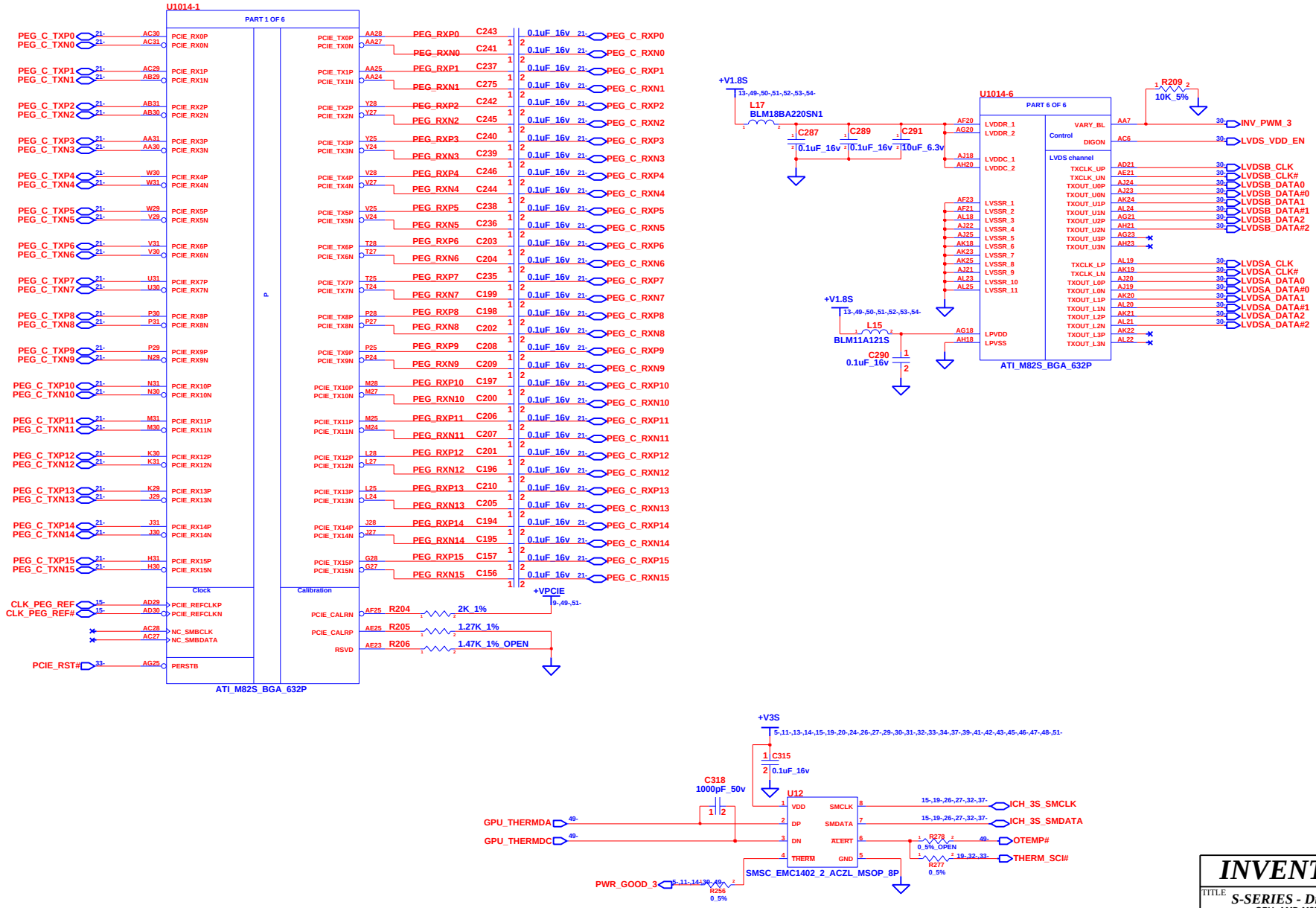

INVENTEC

TITLE **S-SERIES - Discrete**
GPU_AMD-M82S-2

SIZE	CODE	DOC. NUMBER	REV
A3	CS	1310A21614	A01

SHEET 50 OF 54

CHANGE by Drawer_Name 31-Mar-2008

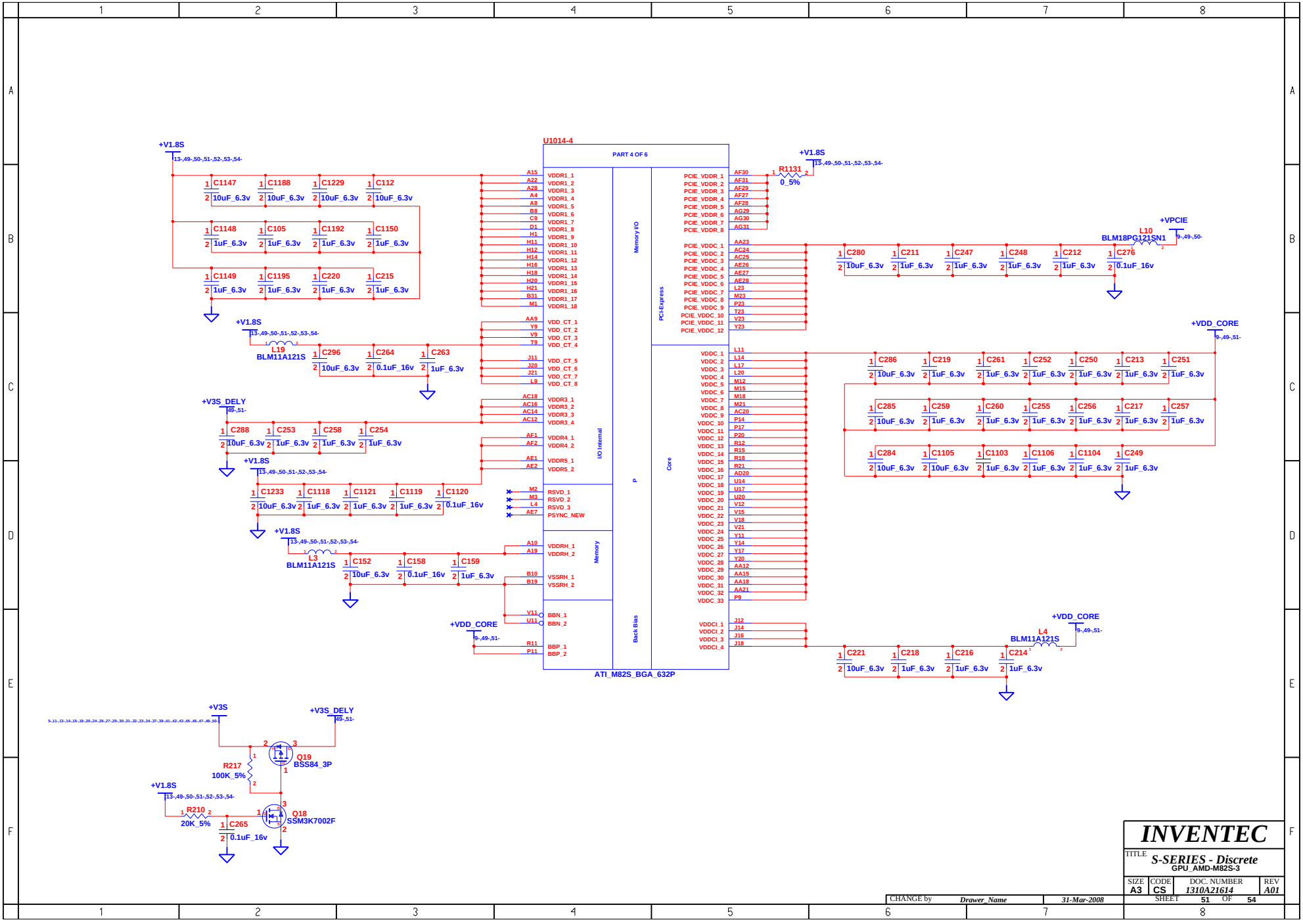
U1014-4
PART 4 OF 6
ATI_M82S_BGA_632P
Memory I/O
PCI-Express
I/O Internal
Memory
Back Bias
Core
+V1.8S
+V3S_DELY
+VDD_CORE
+VPCIE
+V3S
R1131 0_5%
L10 BLM18PG121SN1
L19 BLM11A121S
L3 BLM11A121S
L4 BLM11A121S
R217 100K_5%
R210 20K_5%
Q19 BSS84_3P
Q18 SSM3K7002F
INVENTEC
S-SERIES - Discrete
GPU_AMD-M82S-3
SIZE A3
CODE CS
DOC. NUMBER 1310A21614
REV A01
SHEET 51 OF 54
CHANGE by Drawer_Name
31-Mar-2008

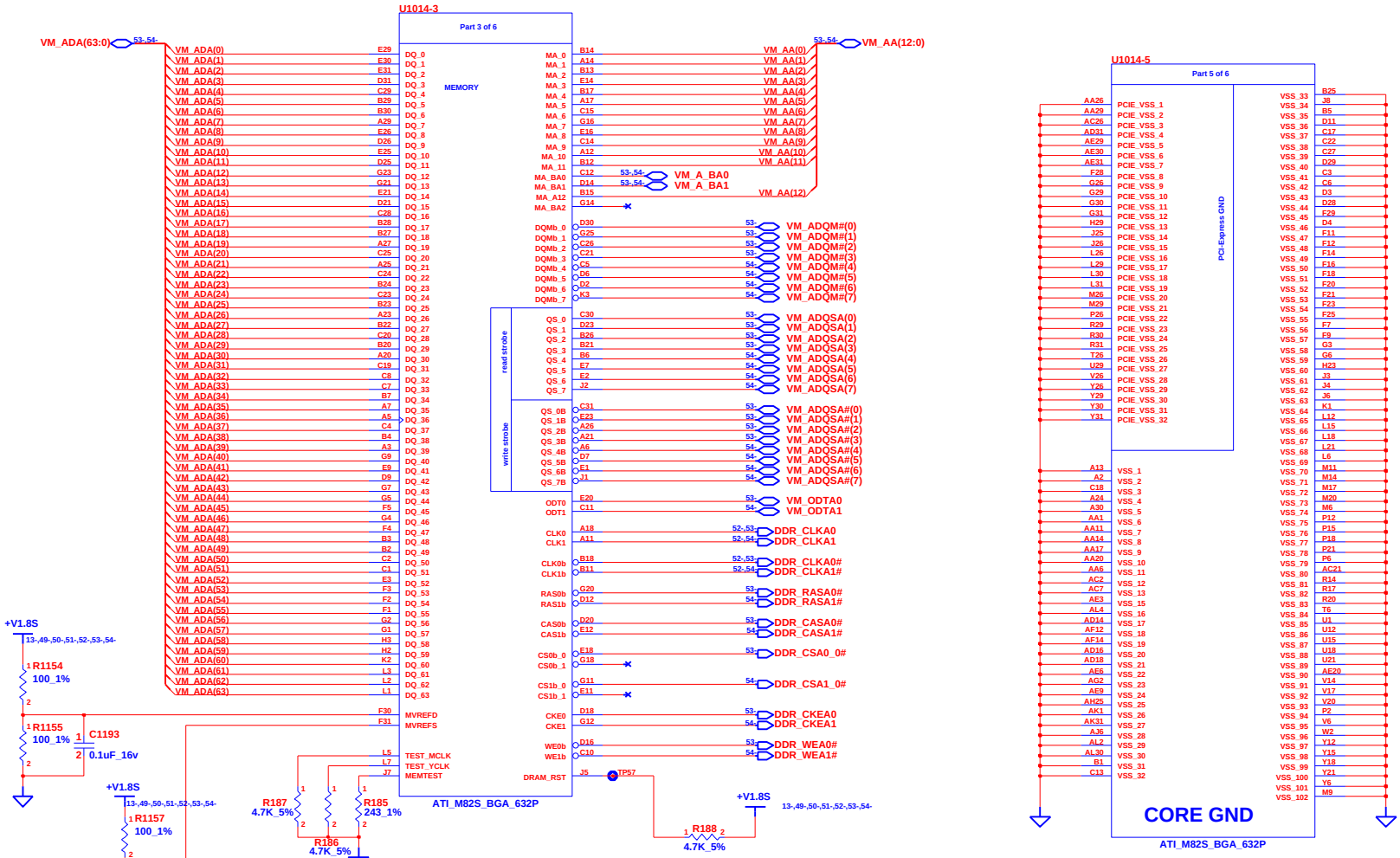

Layou Note: Put these resisters close to V-RAM.

CHANGE by	Drawer_Name	31-Mar-2008	

INVENTEC

TITLE: *S-SERIES - Discrete*
GPU_AMD-M82S-4

SIZE	CODE	DOC. NUMBER	REV
A3	CS	1310A21614	A01

SHEET 52 OF 54

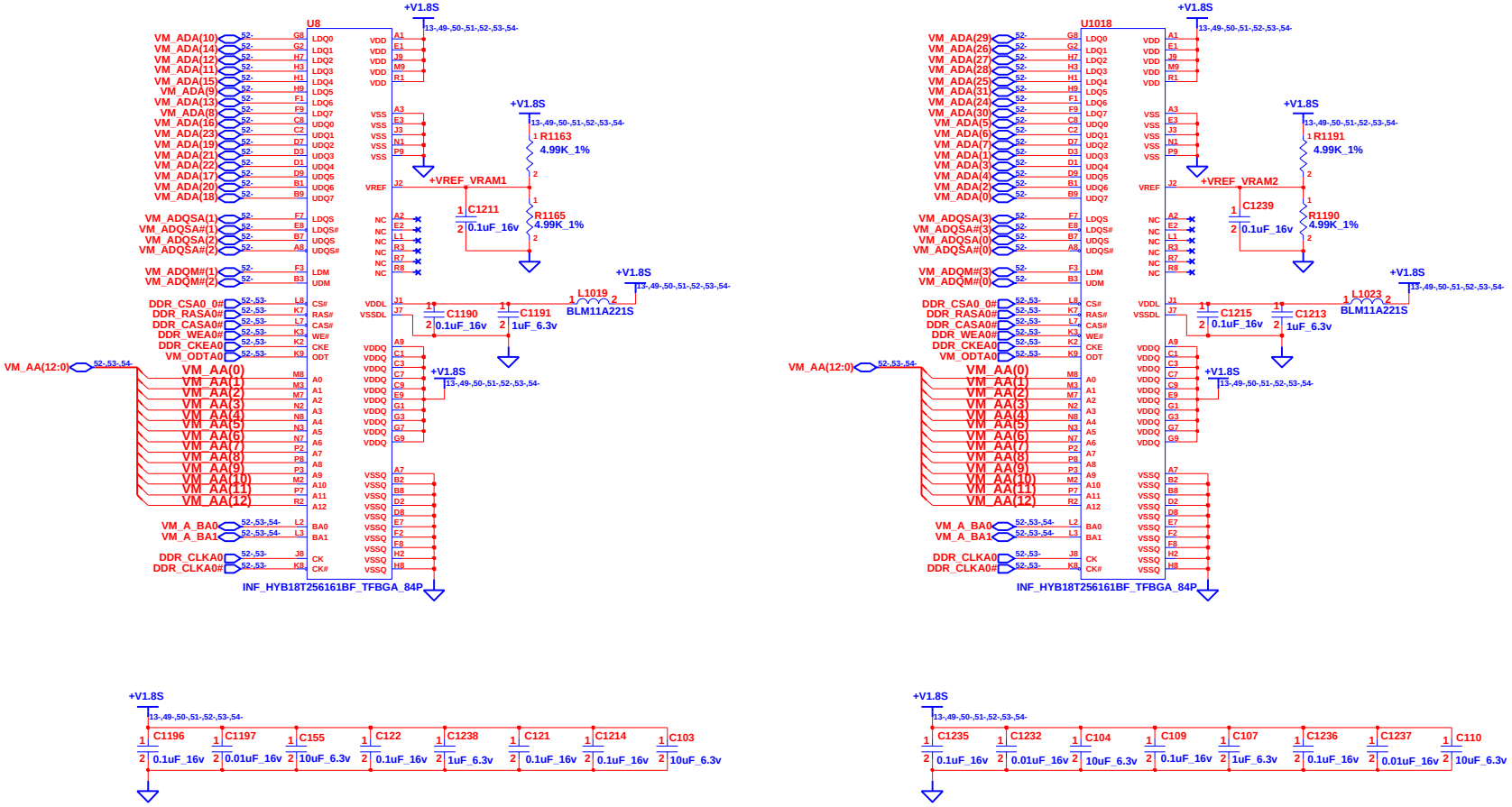

CHANGE by	Drawer_Name	31-Mar-2008	

INVENTEC

TITLE: *S-SERIES - Discrete*
Video RAM (GDDR2) -1

SIZE	CODE	DOC. NUMBER	REV
A3	CS	1310A21614	A01

SHEET 53 OF 54

淘本本
TBenBen.com

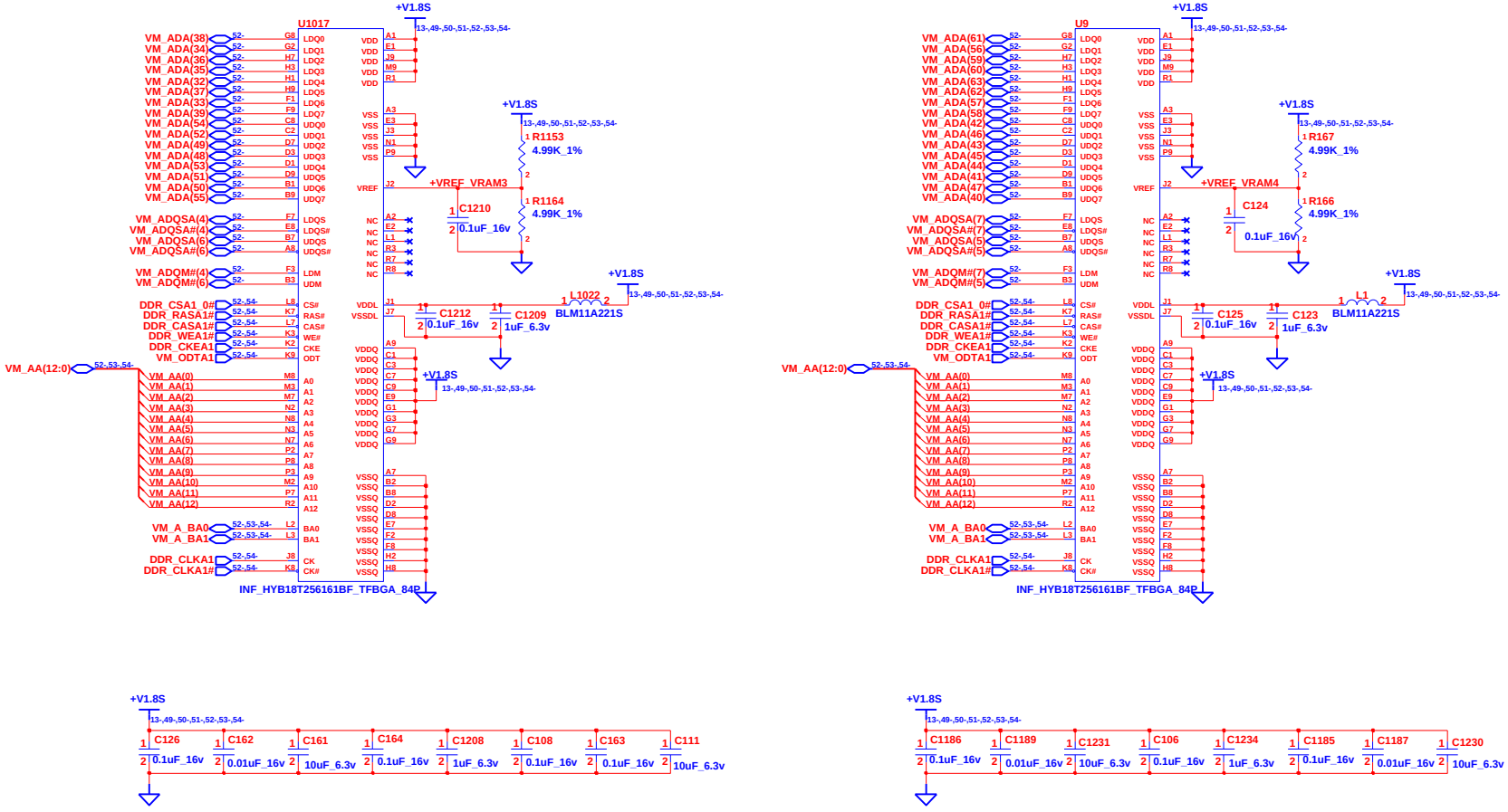

CHANGE by	Drawer_Name	31-Mar-2008	

INVENTEC

TITLE: *S-SERIES - Discrete*
Video RAM (GDDR2) -2

SIZE	CODE	DOC. NUMBER	REV
A3	CS	1310A21614	A01

SHEET 54 OF 54