Haier

CAUTION:

READ THIS MANUAL CAREFULLY
TO DIAGNOSE TROUBLE CORRECTLY
BEFORE OFFERING SERVICE

SERVICE MANUAL

COLOR TV

MODEL: 42EP25BAT/42HP25BAT

THIS MANUAL IS USED BY QUALIFIED APPLIANCE TECHNICIANS ONLY.
HAIER DOES NOT ASSUME ANY RESPONSIBILITY FOR
PROPERTY DAMAGE OR
PERSONAL INJURY FOR IMPROPER SERVICE PROCEDURES DONE
BY ONE UNQUALIFIED PERSON.

CONTENT

1. Features----------3

2. Safety Precautions----------4

3. Images of Module and Circuit Boards----------7

4. Key IC Description& Trouble Shooting Guide---------9

5.Signal Flowing Chart----------13

6. Bus Control Adjustment----------15

7. Circuit Diagram ----------22

8. Connection Sketch ----------45

Features

Product features			
No.	**Options**	**Functions**	
1	**Basic**	Screen size	42"Wide
2		Aspect ratio	16:9
3		Brightness	1200cd/m2(HD)/1500cd/m2(ED)
4		Contrast Ratio(Darkroom)	10000:1
5		Resolution□HD/ED□	1366*768(HD)/ 852*480(ED)
6		Response Time□ms□	/
7		Angel of view	176
8		Supported Colors	16.7M Colors
9	**Video**	HDTV\EDTV\SDTV	HDTV
10		intergrate NTSC\ATSC TUNER	Yes
11		3D COMB filer	Yes
12		Picture in Picture	YES
13		Multiple Sound modes	YES
14		Color temperature control	YES
15		Dobly Digital-AC-3	Yes
16		Stereo Surround sound	YES
17		MTS\SAP	Yes
18		Multiple Sound modes	Yes
19		outer spearkers output(W)	No
20		Semltransparent menu	Yes
21		ZOOM	Yes
22		V-CHIP\CCD	Yes
23		Trilingual OSD	Yes
24		Auto channel setup	Yes
25		Clock ON\OFF Timer	Yes
26		Sleep timer	Yes
27		RF input	1
28		Composte input	1
29		VGA	1
30		component input	1
31		AV output	1
32		DVI	HDMI
33		Digital Audio output	1
34		HDMI	1
35		Audio output power(outer)(W)	2x10W
36		Power consumption□W□(HD/ED)	260W(ED)/ 320W(HD)
37		Standby power consumption	3W
38		Voltage range□V□	AC120V 10%

Safety Precautions

IMPORTANT SAFETY INSTRUCTIONS

Read all of the instructions before using this appliance. When using this appliance, always exercise basic safety precautions, including the following:

1)Save these Instructions ---the safety and operating instructions should be retained for future reference.
2)All warning on the appliance and in the operating instructions should be followed.
3)Cleaning --- Unplug from the wall outlet before cleaning. Do not use liquid cleaners or aerosol cleaners. Use only dry cloth for cleaning.
4)Attachments ---do not use attachments not recommended by the manufacturer as they may cause hazards.
5)Water and moisture -- do not place this product near water, for example, near a bathtub, wash bowl, kitchen sink, laundry tub, in a wet basement, or near a swimming pool.
6)Accessories ---do not place this unit on an unstable cart, stand, tripod, bracket, or table. Use only with a cart, stand, tripod, bracket, or table recommend by the manufacture, or sold with the unit.
7)Ventilation ---Slots and openings in the cabinets and the back or bottom are provided for ventilation. These openings must not be blocked. In a built in installation such a bookcase or rack do not install product unless proper ventilation is provided.
8)Power Source ---this TV should be operated only from the type of power source indicated on the rating label. If you are not sure of the type of power supply to your home, consult your appliance dealer or local power company.
9)Do not defeat the safety purpose of the polarized or grounding-type plug. A polarized plug has two blades with one wider than the other. A grounding type plug has two blades and a third grounding prong. The wide blade or the third prong are provided for your safety. If the provided plug does not fit into your outlet, consult an electrician for replacement of the obsolete outlet. To prevent electric shock, ensure the grounding pin on the AC cord power plug is securely connected.
10)Power cord protection ---Power supply cords should be routed so that they are not likely to be walked on or pinched by items placed upon or against them. Pay particular attention to cords or plugs, convenience receptacle, and the point where they exit from the appliance.
11)Lighting precaution ---for added protection for this product during a lighting storm or when it is left unattended for long period of time, unplug it from the wall outlet and disconnect the antenna or cable system. This will prevent damage to the product due to lighting and power line surges.
12)Never push objects of any kind into this product through openings as they may touch dangerous voltage point or short out parts that could result in a fire or electric shock. Avoid spilling liquid of any kind on the product.
13)Servicing ---do not attempt to service the product by yourself, as opening or removing covers may expose you to dangerous voltage or other hazards. Refer all servicing to authorized service personnel.
14)Unplug this unit from the wall outlet and refer servicing to qualified service personnel under the following conditions:
a. When the power supply cord or plug is damaged or frayed.

b. If liquid has been spilled, or objects have been fallen into the unit.
c. If the unit has been exposed to rain or water.
d. If the unit does not operate normally by following the operating instructions. Adjust only those controls that are covered by the operating instructions, as improper adjustment of other controls may result in damage and will often require extensive work by a qualified technician to restore the unit to its normal operation.
e. If the unit has been dropped or damaged in any way.
f. When the unit exhibits a distinct change in performance; this indicates a need for service.

15) Heat --- The product should be situated away heat source such as radiators, heat registers, stoves, or other products (Including amplifiers) that product heat.

16) Overloading ---Do not overload wall outlets and extension cord as this can result in a risk of fire or electric shock.

Images of Module and Circuit Boards

a: Signal flow-chart

Printed Circuit Digital Board(Main Board)

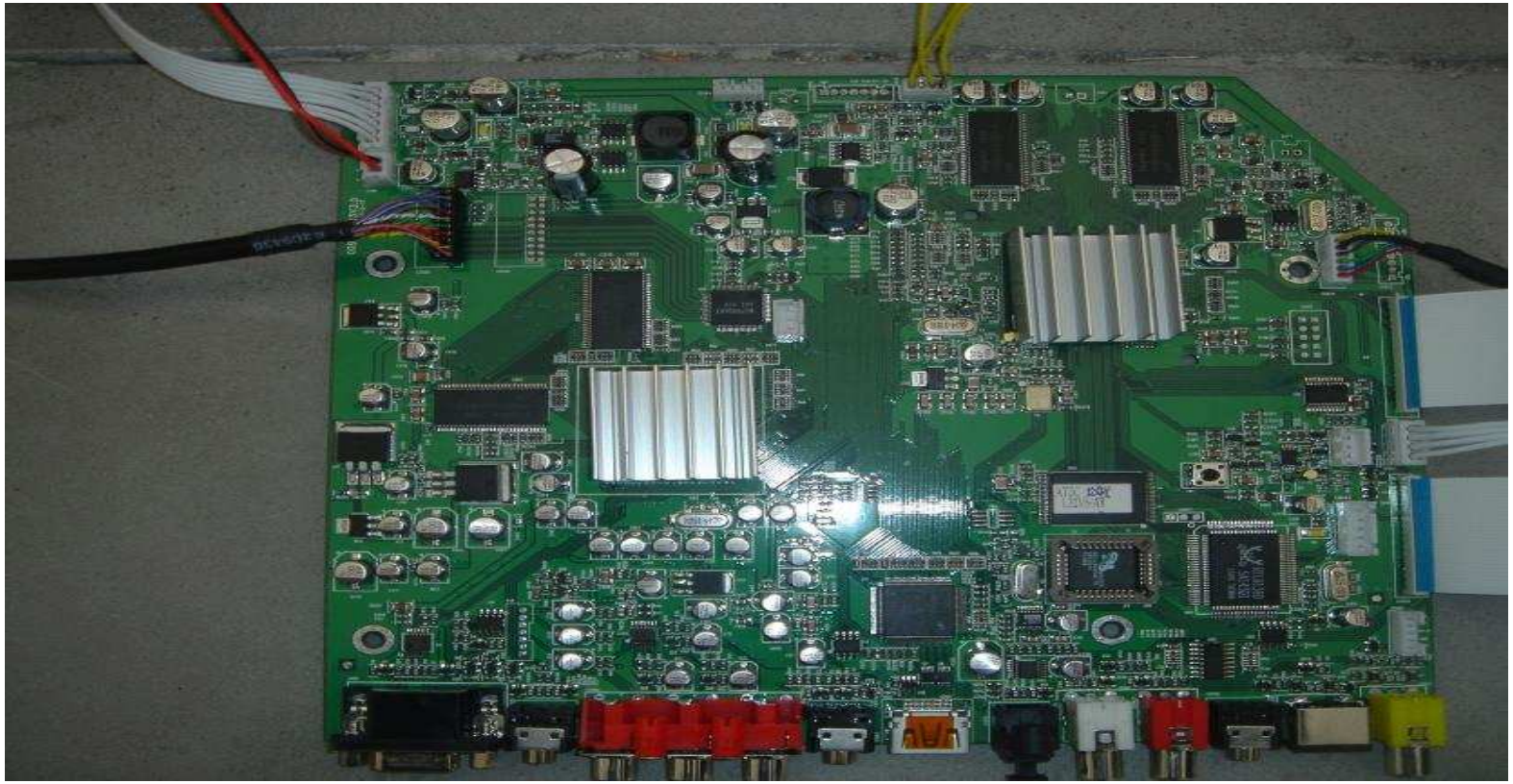

b□Printed Circuit Audio Board

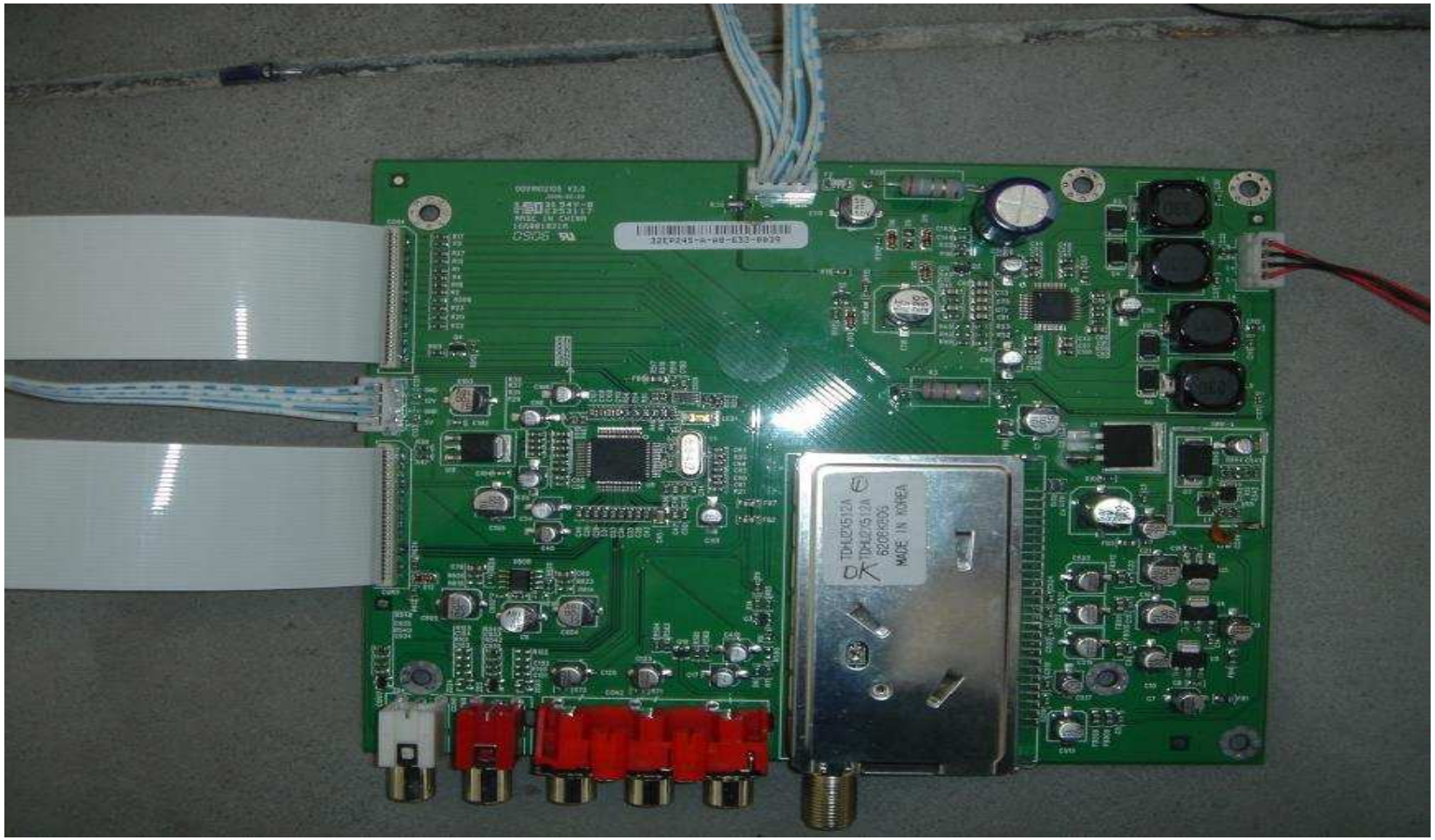

Key IC Description& Trouble Shooting Guide

1 SVP_EX62

The SVP™EX-62 video processor consists of highly integrated system-on-a-chip devices, targeting the converging HDTV-ready and PC-ready digital CRT TVs, LCD TVs, PDP TVs, and DLP TVs applications where high precision processing of video and data are desired. The SVP™EX-62 contains high precision 10-bit ADCs up to 108 MHz for video and PC RGB inputs conversion. For analog video processing, the SVP™EX-62 integrates a high-performance 5th generation multi-format 3D digital-comb video decoder that supports NTSC, PAL and SECAM*, an HDTV sync separator, motion adaptive de-interlacing engine, and the video format conversion engine, supporting many output modes, picture-in-picture (PIP), multi-window and picture-on-picture display modes. From the video signals inputs to the processed video outputs, the SVP™EX-62 carries out the video signal processing in 10-bit mode to ensure the maxima video signal fidelity, thus avoiding the color-banding artifacts. Depending on the applications and different product mix, the SVP™EX-62 for LCD/PDP TV applications embed one LVDS transmitter for the interface with the LCD and PDP TV applications.

Trident's DCRe™ – Digital Cinema Reality engine, is integrated inside the SVP™EX-62 to provide the most natural cinema-realistic images. The DCRe™ technology integrates advanced 3D-comb video decoding, advance motion adaptive de-interlacing, object-based digital noise reduction, cubic4 image scaling, film mode support, average picture level (APL), edge smoothing and dynamic sharpness enhancement. Trident's patented Unified Memory Architecture (UMA) that allows frame rate conversion, 3D comb video decoding, and video enhancement processing to share the same memory buffer to achieve high-speed and cost-effective applications. All these advance digital processing techniques combined with a true 10-bit video data processing for the most optimal video fidelity to provide the most natural and cinema quality video images.

For achieving the maximum system design flexibility, SVP™EX-62 integrates all video interfaces to support converging digital video, analog video, and PC data applications. The users of Trident's single chip SVP™EX-62 video processor(s) will benefit from many features while maintaining a price competitive advantage over the existing solution(s)

ternal use only

2 HiDTV

HiDTV chip is the most advanced and highly integrated component for digital set-top boxes, information appliances, and television. It provides one-stream high-definition decode and display, an assortment of peripheral device controllers, and an embedded MIPS. It can be used a either a SOC (system-on-a-chip) solution or as a discrete PCI multimedia device when coupled with an external CPU.

HiDTV provides system design flexibility for digital video and audio products. It supports transport stream selection and de-multiplexing in a variety of serial and parallel input formats. It descrambles, filters, and decodes worldwide video and audio formats. HiDTV displays graphics and high quality video. It also supports watch-one-record-one (time shift), and picture-in-picture display.

Features

- One MIPS (T5180) with MMU180MHz (cache/MEM: 16k, 8k, 8k, 8k)
- One HD MPEG2 decoder
- One hardware TS demux with DVB/DES descrambler
- Supports DVD/SVCD/VCD decoder
- Supports PVR/Time shift
- DPTV_SVP with de-interlacing/3:2 pull down/edge smoothing/noise reduction
- Trident's 2D graphics engine
- AC3/MPEG2/MP3/AAC ... audio
- Two Video planes and six Graphics planes (CC/Graphics/OSD/Logo/Cursor)
- Two HW timer
- One ATSC/DVB compliant Transport input
- One IEEE1394's TS in/out port
- One IDE/two SmartCard/one UART/two inferred IR/RTC
- PCI Host/PCI slave with bus master
- 8* PWM-GPIO/I2C/2*interrupt
- Audio AC link/I2S/SPDIF
- CCIR601/CCIR656/RGB24 inputs
- Digital 24bit RGB/YUV/CCIR601/CCIR656
- Analog RGB/YPbPr (480i, 480p(MV7), 1080i, 720p) output

For Tailer Internal Use

3 MSP 4450

Multistandard Sound Processor Family

Release Note: Revision bars indicate significant changes to the previous edition. The hardware and software description in this document is valid for the MSP 44x0G version C13 and following versions.

1. Introduction

The MSP 44x0G family of single-chip Multistandard Sound Processors covers the sound processing of all analog TV-Standards worldwide, as well as the NICAM digital sound standards. The full TV sound processing, starting with analog sound IF signal-in, down to processed analog AF-out, is performed on a single chip. Figure 1–1 shows a simplified functional block diagram of the MSP 44x0G.

These TV sound processing ICs now include versions for processing the multichannel television sound (MTS) signal conforming to the standard recommended by the Broadcast Television Systems Committee (BTSC). The DBX noise reduction, or alternatively, Micronas Noise Reduction (MNR) is performed alignment free.

Other processed standards are the Japanese FM-FM multiplex standard (EIA-J) and the FM Stereo Radio standard.

Current ICs have to perform adjustment procedures in order to achieve good stereo separation for BTSC and EIA-J. The MSP 44x0G has optimum stereo performance without any adjustments.

All MSP 44x0G versions are pin compatible to the MSP 34xyD. Only minor modifications are necessary to adapt a MSP 34xyD controlling software to the MSP 44x0G. The MSP 44x0G further simplifies controlling software. Standard selection requires a single I²C transmission only. **Compared to the MSP 44x0G-B8 version, the I²S input configuration has been modified. Please refer to Section 4.4. on page 59.**

The MSP 44x0G has built-in automatic functions: The IC is able to detect the actual sound standard automatically (Automatic Standard Detection). Furthermore, pilot levels and identification signals can be evaluated internally with subsequent switching between mono/stereo/bilingual; no I²C interaction is necessary (Automatic Sound Selection).

The MSP 44x0G can handle very high FM deviations even in conjunction with NICAM processing. This is especially important for the introduction of NICAM in China.

The ICs are produced in submicron CMOS technology. The MSP 44x0G is available in the following packages: PSDIP64-1, PMQFP80-11, and PMQFP64-2.

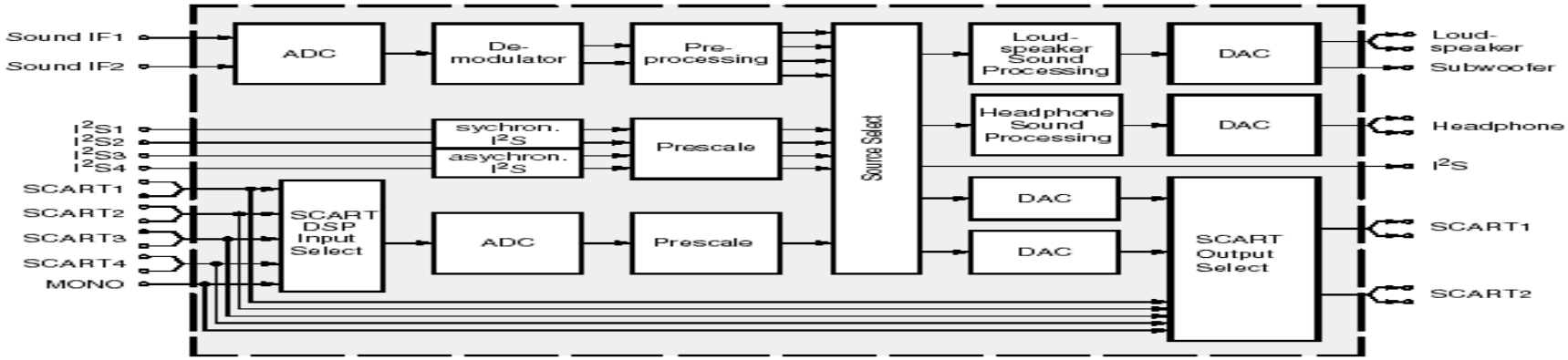

Signal Flowing Chart

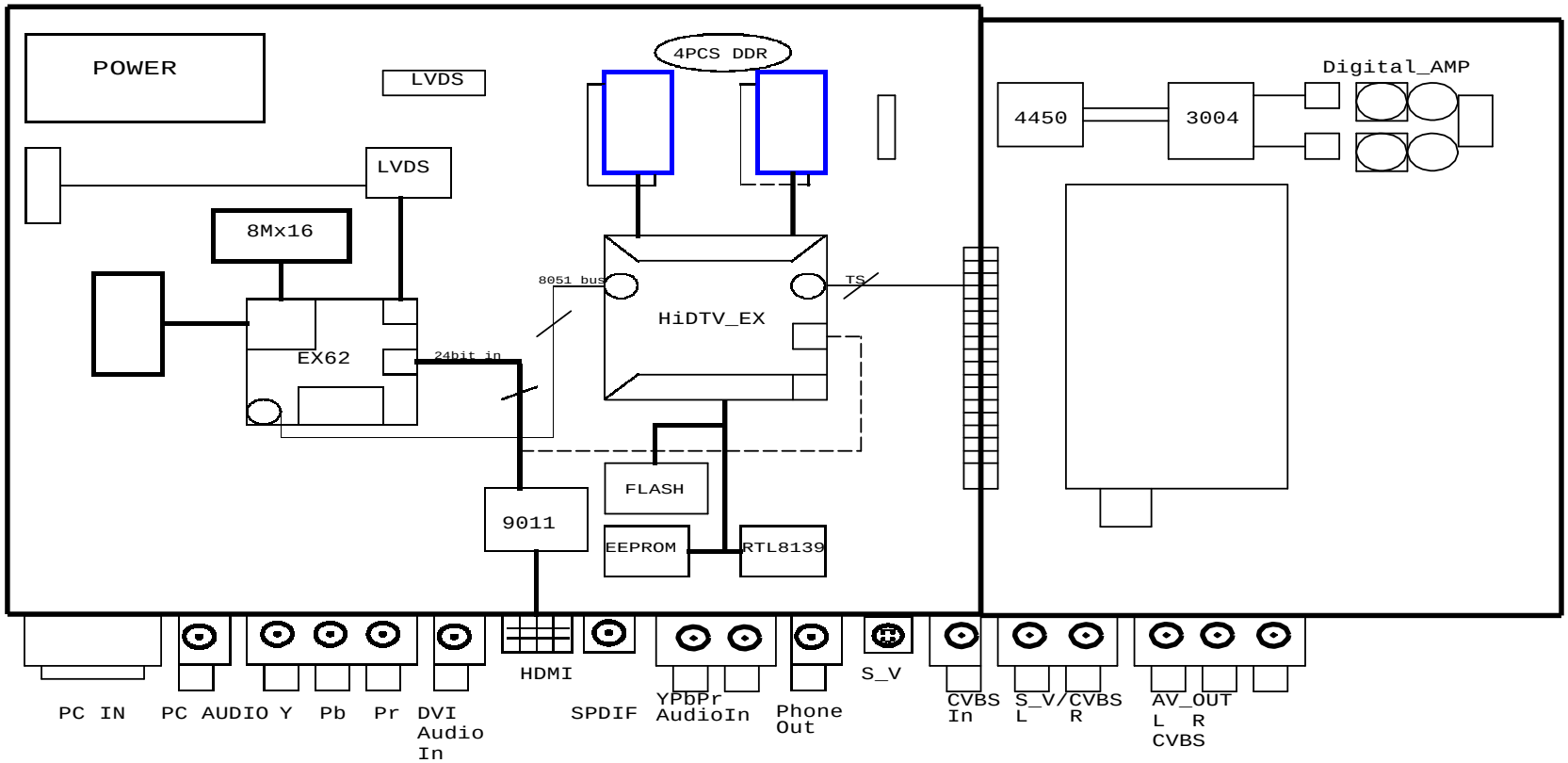

HAIER ATSC EX62 V2.0		
Title HDA008A_2.0		
Size A	Document Number Board Placement	Rev A
Date: Tuesday, February 28, 2006	Sheet 3 of 24	

HDA005A Board Block Diagram

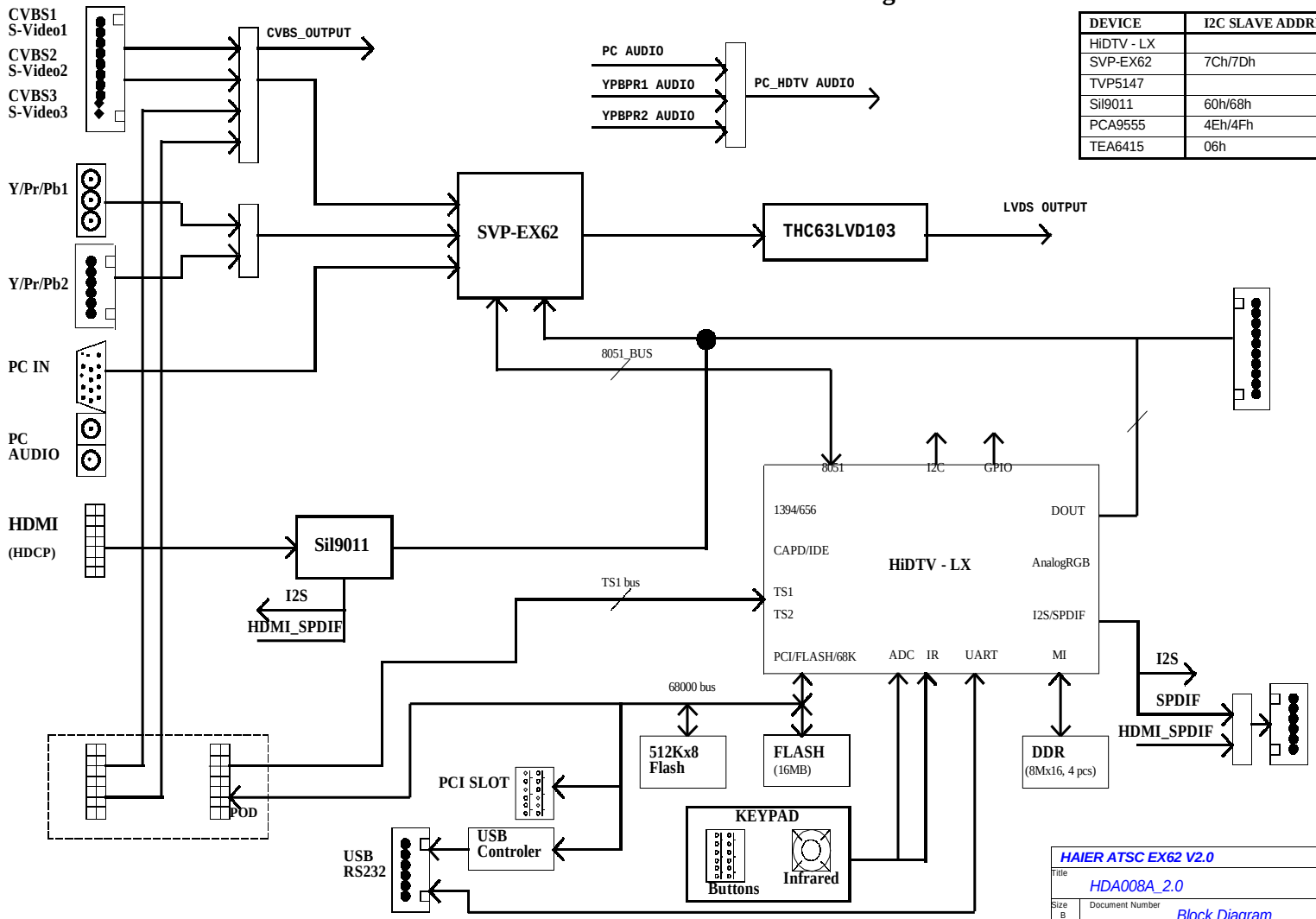

DEVICE	I2C SLAVE ADDRESS
HiDTV - LX	
SVP-EX62	7Ch/7Dh
TVP5147	
Sil9011	60h/68h
PCA9555	4Eh/4Fh
TEA6415	06h

HAIER ATSC EX62 V2.0		
Title: HDA008A_2.0		
Size: B	Document Number: Block Diagram	Rev: A
Date: Tuesday, February 28, 2006	Sheet 2 of 24	

Bus Control Adjustment

1 Factory Mode

Press Menu-88939433-OK,Enter the Factory Mode.You can check the version of the software,adjust some settings.But we don’t advise you change this settings.because of the TV has already hold in the state of optimality.If you have to chang this settings,please connect with the local service center.

White Balance	LB Bri	20		Cold TMP	Rcut	252
	LB Crt	20			Rdrv	251
	Ccut	63			Gcut	252
	CDrv	2			Gdrv	3
	RCut	248			Bcut	244
	RDrv	253			Bdrv	5
	GCut	244		Warm TMP	Rcut	8
	GDrv	3			Rdrv	3
	BCut	236			Gcut	252
	BDrv	251			Gdrv	3
	Cold TMP				Bcut	248
	Warm TMP				Bdrv	238
Video Setting	Video Mode	STD Bri	50	20		
		STD Crt	50			
		STD Color	50			
		STD Tint	0			
		STD Sharp	50			
		Mild Bri	40			
		Mild Crt	50			
		Mild Color	40			
		Mild Tint	0			
		Mild Sharp	40			
		Vivid Bri	40			
		Vivid Crt	60			
		Vivid Color	70			
		Vivid Tint	0			
		Vivid Sharp	50			
	DTV Mode	STD Bri	51	50		
		STD Crt	50			
		STD Color	50			

		STD Tint	0			
		STD Sharp	50			
		Mild Bri	40			
		Mild Crt	50			
		Mild Color	40			
		Mild Tint	0			
		Mild Sharp	40			
		Vivid Bri	60			
		Vivid Crt	60			
		Vivid Color	70			
		Vivid Tint	0			
		Vivid Sharp	50			
	VGA Mode	STD Bri	51	50		
		STD Crt	50			
		STD Color	50			
		STD Tint	0			
		STD Sharp	50			
		Mild Bri	40			
		Mild Crt	50			
		Mild Color	40			
		Mild Tint	0			
		Mild Sharp	40			
		Vivid Bri	60			
		Vivid Crt	60			
		Vivid Color	70			
		Vivid Tint	0			
		Vivid Sharp	50			
	YPbPr Mode	STD Bri	50			
		STD Crt	50			
		STD Color	50			
		STD Tint	0			
		STD Sharp	50			
		Mild Bri	40			
		Mild Crt	50			
		Mild Color	40			
		Mild Tint	0			
		Mild Sharp	40			
		Vivid Bri	60			

		Vivid Crt	60			
		Vivid Color	70			
		Vivid Tint	0			
		Vivid Sharp	50			
	HDMI Mode	STD Bri	50			
		STD Crt	50			
		STD Color	50			
		STD Tint	0			
		STD Sharp	50			
		Mild Bri	40			
		Mild Crt	50			
		Mild Color	40			
		Mild Tint	0			
		Mild Sharp	40			
		Vivid Bri	60			
		Vivid Crt	60			
		Vivid Color	70			
		Vivid Tint	0			
		Vivid Sharp	50			
	Bri MAX	30		32		
	Ctr MAX	45		63		
	Color MAX	112				
	Sharp MAX	30		16		
	Tint MAX	511				
	Bri Mid	0				
	Ctr Mid	30				
	Color Mid	56				
	Sharp Mid	20		12		
	Tint Mid	0				
	Bri Min	-20		-33		
	Ctr Min	8				
	Color Min	0				
	Sharp Min	0				
	Tint Min	-511				
Audio Setting	Audio Mode	Live 120Hz	11	10		
		Live 200Hz	40			
		Live 500Hz	70			
		Live 1K2Hz	50			

		Live 3KHz	40			
		Live 7K5Hz	35			
		Live 12KHz	30			
		Pop 120Hz	90	60		
		Pop 200Hz	10			
		Pop 500Hz	70			
		Pop 1K2Hz	30			
		Pop 3KHz	60			
		Pop 7K5Hz	50			
		Pop 12KHz	55			
		Rock 120Hz	20			
		Rock 200Hz	30			
		Rock 500Hz	40			
		Rock 1K2Hz	50			
		Rock 3KHz	60			
		Rock 7K5Hz	70			
		Rock 12KHz	80			
	Max Volume	115		113		
	80 Volume	114		112		
	Mid Volume	111		110		
	20 Volume	108		105		
	Min Volume	64				
	PWM	50				
Factory INI	Clear Rom	Right to clear				
Factory Options	Test Paten					
	Safeware Version	L_HIDTV_AU32_HAC_060518				
	TOFAC	M				
Aging Mode:OFF						
Press EXIT,exit factory						

Remark:

The date of the chart only is a example,please don’t adjust the factory mode base on it.

2 Others

Front panel controls

42EP25BAT 42HP25BAT

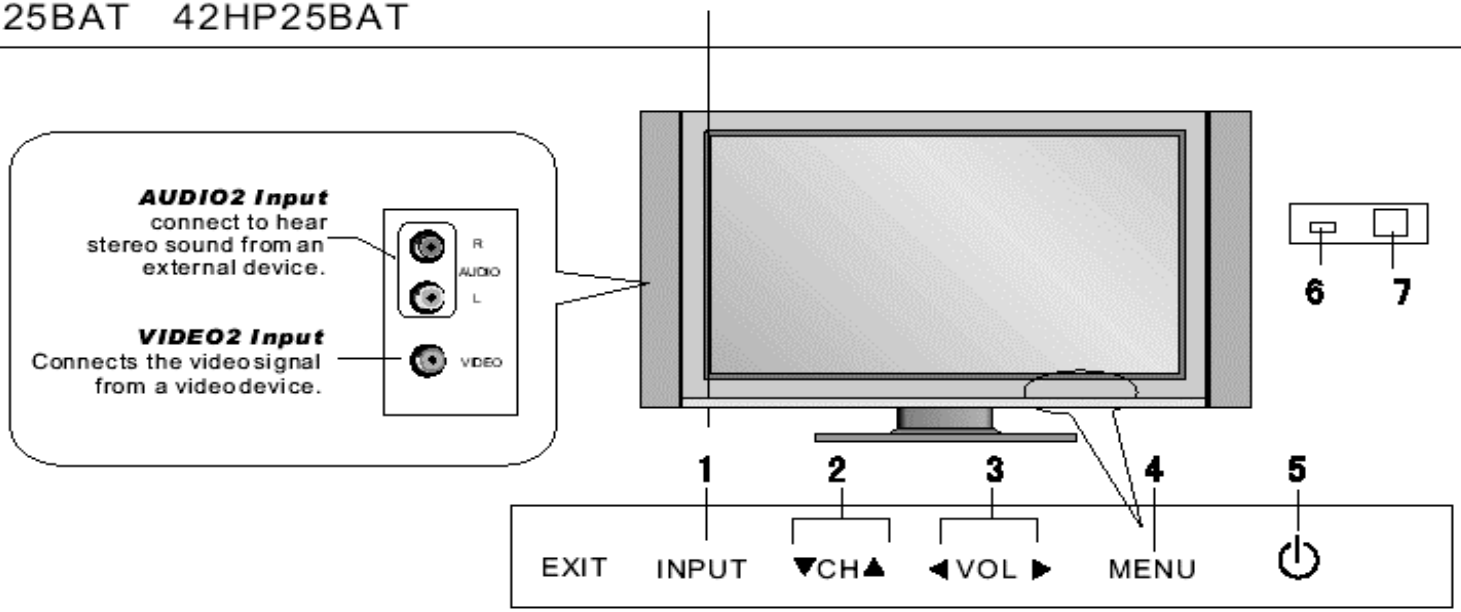

(The buttons are on the bottom of the TV set)

1.INPUT: all input source display and OK confirm.
2.CH (▼▲) : program minus and plus, menu options
3.VOL (◀▶): volume decrease and increase , menu reset and entry
4.MENU: menu display
5. ⏻ (POWER) : Is used to activate the display or return to standby mode.
6.Power indicator: in red when standby mode, in blue when display.
7.Remote control signal receive window

Back panel controls

42EP25BAT 42HP25BAT

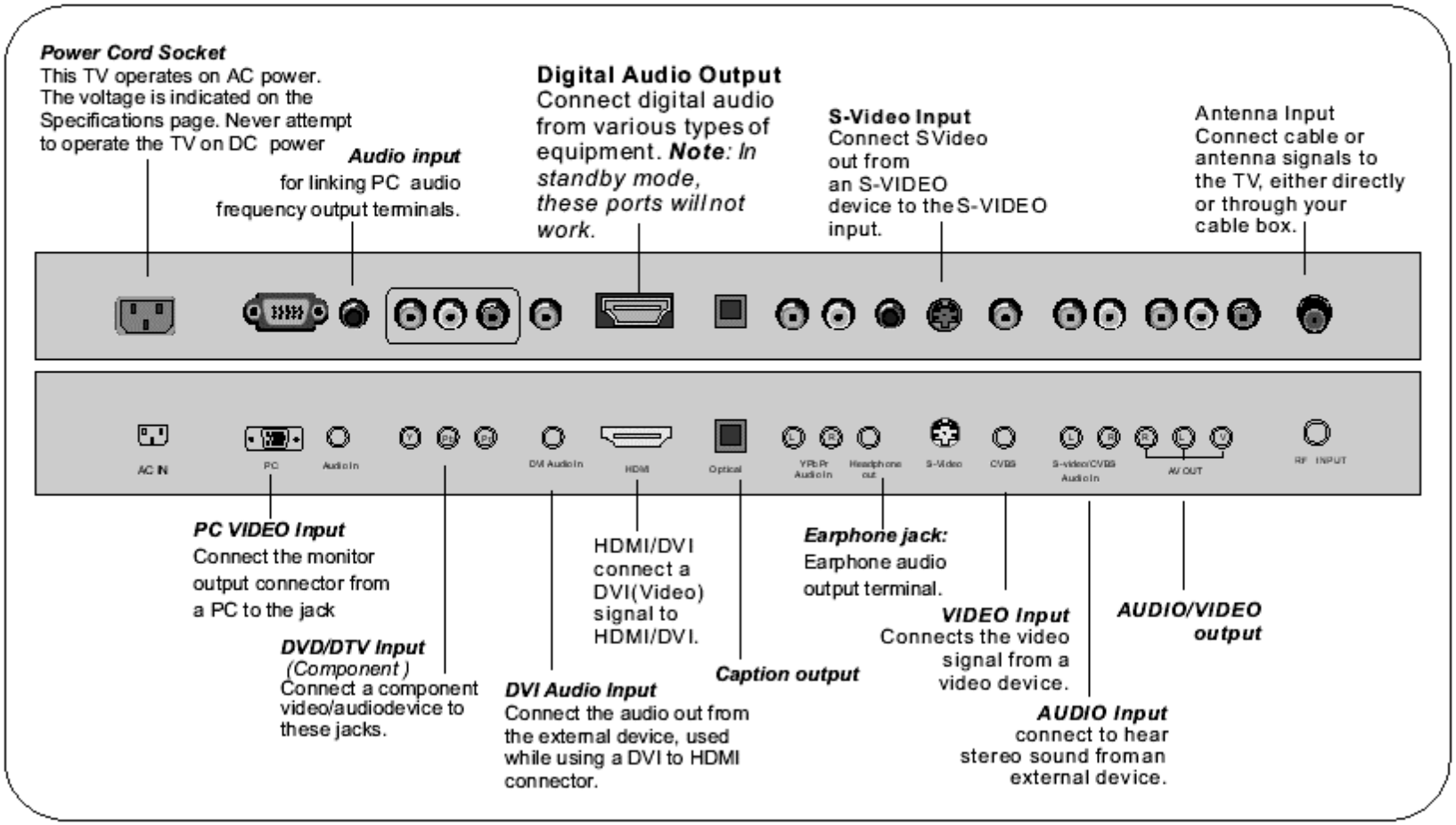

Universal Remote Controller

- The remote controller cannot be operated unless the batteries are properly loaded.
- When using the remote control, aim it at the remote control sensor on the TV.

Function introduction

POWER
Turns your TV or any other programmed equipment on or off, depending on mode.

CH.LIST
Open the channel list.

PIP function buttons
- **PIP:** Selects PIP, POP and main Window;
- **SWAP:** In PIP and POP mode, swap the main and sub window;
- **AUDIO SWAP:** In PIP and POP mode, swap the audio of main and sub window;
- **PIP position:** To select sub picture position for PIP.

P.MODE
Selects the picture appropriate for the program's character.

CC(closed caption)
Select a closed caption: CC MUTE, CC ON, CC OFF.

GUIDE
Shows program schedule.

MENU
Brings up the main menu to the screen.

EXIT
Clears all on-screen displays and returns to TV viewing from any menu.

MUTE
Switches the sound on or off

ARC (Aspect Ratio Control)
Changes the aspect ratio. It is not available under pip mode. It is available under pop mode.

VOLUME UP/DOWN
Increases/decreases the sound level.

Digits
press to change the channel.

- button
Press to select additional channels (digital and analog) being broadcast by the same station. For example, to select channel "54-3", press "54", then press "-" and "3".

TV DVD VCR SETBOX CABLE AUDIO
Press the **SELECT** button repeatedly to select one of the system modes in which the remote control can be used. When the desired device is selected, the corresponding LED lights on 5 seconds.

FAVORITE
Open the favorite channel list. Select the subchannel

AUDIO.LIST
Open the audio channel list.

VCR/DVD Functions
Control some video cassette recorders or DVD players.
- ⏮/⏭ Rewind / Fast
- ◀◀/▶▶ backward / Forward
- ■ Stop
- ⏯ Play/Pause
- ● REC

S.MODE
Selects the sound appropriate for the program's character.

FREEZE
Freezes the currently-viewed picture, but audio continues. Press FREEZE button again to resume the normal picture.

INPUT
show the input source mode.

INFO
When you watch the TV, press the key, the information displays on bottom of the screen.

THUMBSTICK (Up/Down/Left/Right/OK)
Allows you to navigate the on-screen menus and adjust the system settings to your preference.

SLEEP button
Displays the Sleep Timer option.

LIGHT
Press the light button, white LED will be ON, release this key, white LED will be OFF.

SAP
Selects MTS sound: Mono, Stereo, and SAP in Analog mode. Change the audio language in DTV mode.

CHANNEL UP/DOWN
Selects available channels

Q.VIEW
Switch the current channel to the last channel you have viewed, or switch the other source to TV.

circuit Diagram

a) Digital Board

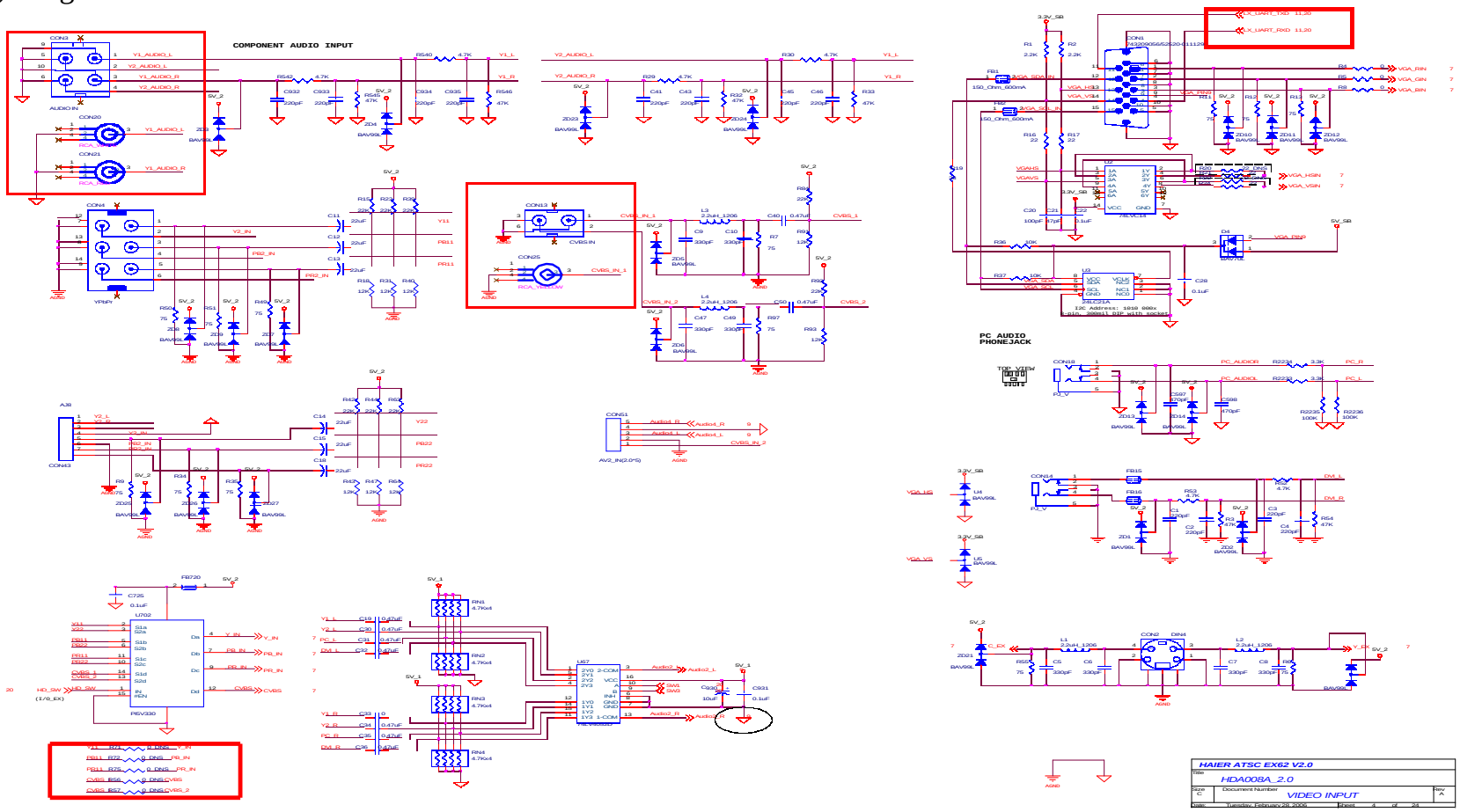

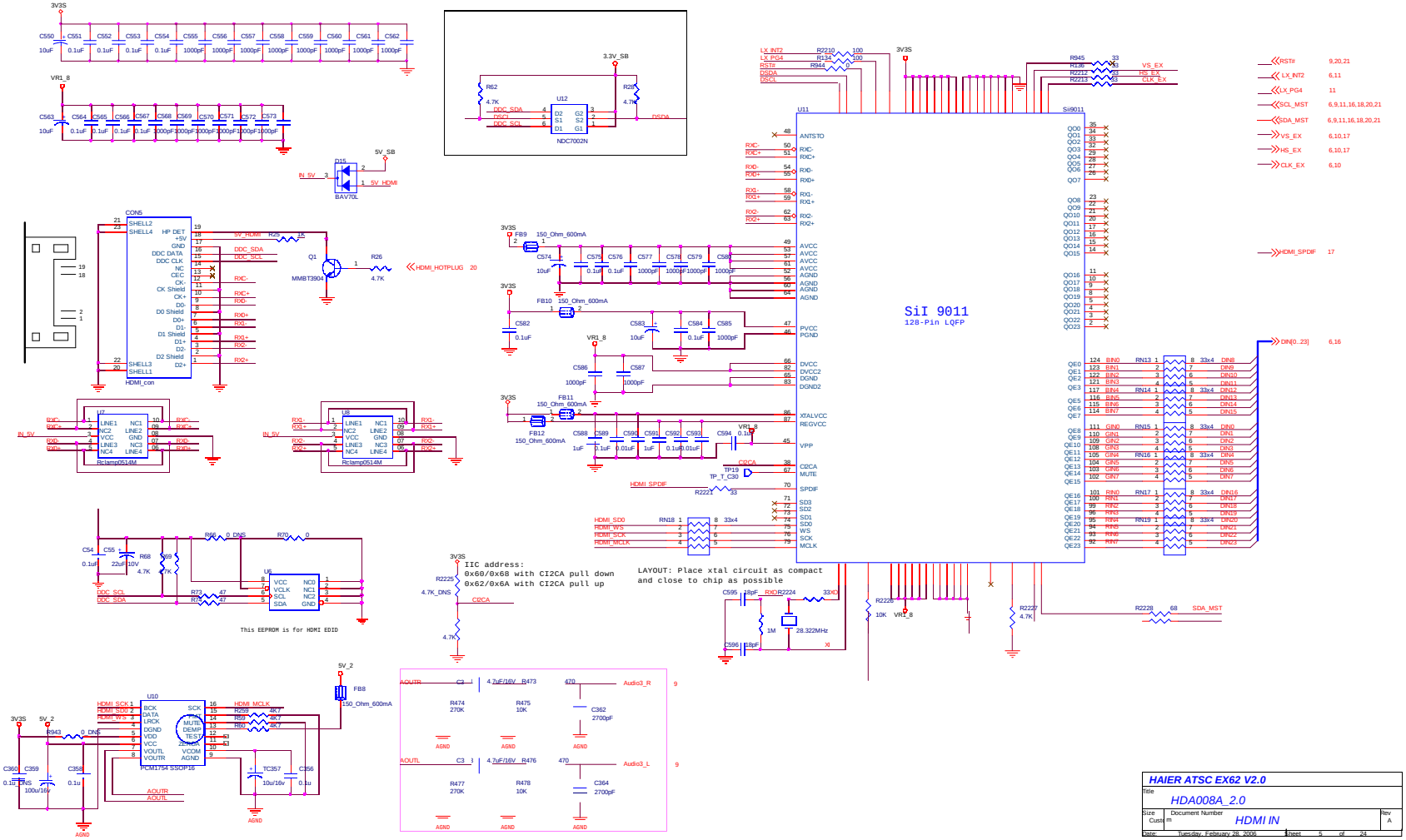
SiI 9011
128-Pin LQFP
U11
Si9011
U12
NDC7002N
CON5
HDMI_con
Q1
MMBT3904
D15
BAV70L
U7
U8
U10
PCM1754 SSOP16
U6
IIC address:
0x60/0x68 with CI2CA pull down
0x62/0x6A with CI2CA pull up
LAYOUT: Place xtal circuit as compact
and close to chip as possible
This EEPROM is for HDMI EDID
HDMI_HOTPLUG 20
HDMI_SPDIF 17
DIN[0..23] 6,16
RST# 9,20,21
LX_INT2 6,11
LX_PG4 11
SCL_MST 6,9,11,16,18,20,21
SDA_MST 6,9,11,16,18,20,21
VS_EX 6,10,17
HS_EX 6,10,17
CLK_EX 6,10
HAIER ATSC EX62 V2.0
HDA008A_2.0
HDMI IN
Tuesday, February 28, 2006
Sheet 5 of 24

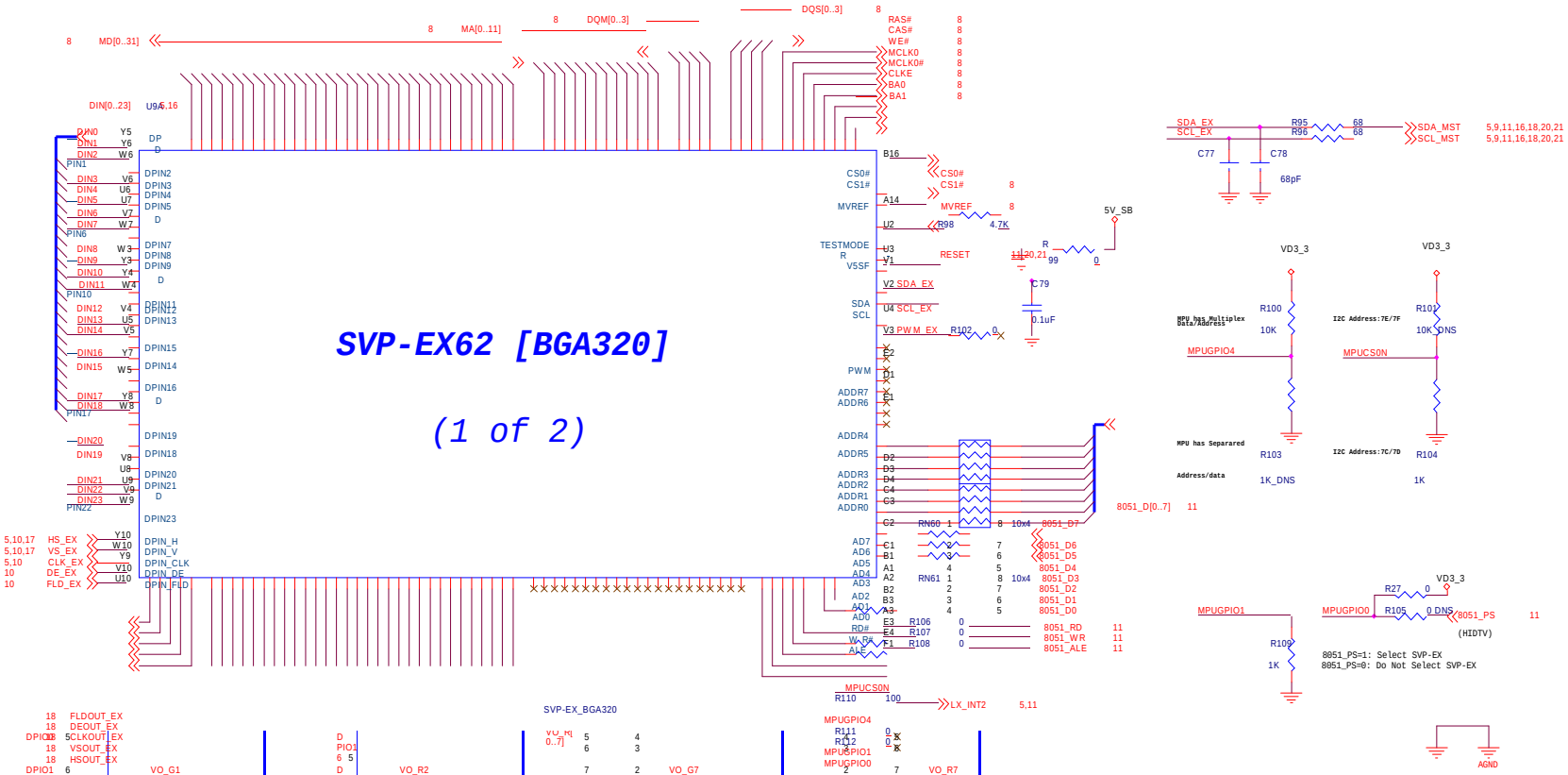

Configuration A: MCU_ADD_CNTRL pulles HIGH

INPUT		OUTPUT			
MPUGPIO1	MPUGPIO0	MPUCS0N	*CS1N	MPUGPIO2	MPUGPIO3
0	0	0	1	1	1
0	1	1	0	1	1
1	0	1	1	0	1
1	1	1	1	1	0

*CS1N is not a input or output pin
CS1N=0: SVP-EX CPU access enabled
CS1N=1:SVP-EX CPU access disabled

HAIER ATSC EX62 V2.0		
Title: HDA008A_2.0		
Size: B	Document Number: SVP-EX62_1	Rev: A
Date: Tuesday, February 28, 2006	Sheet 6 of 24	

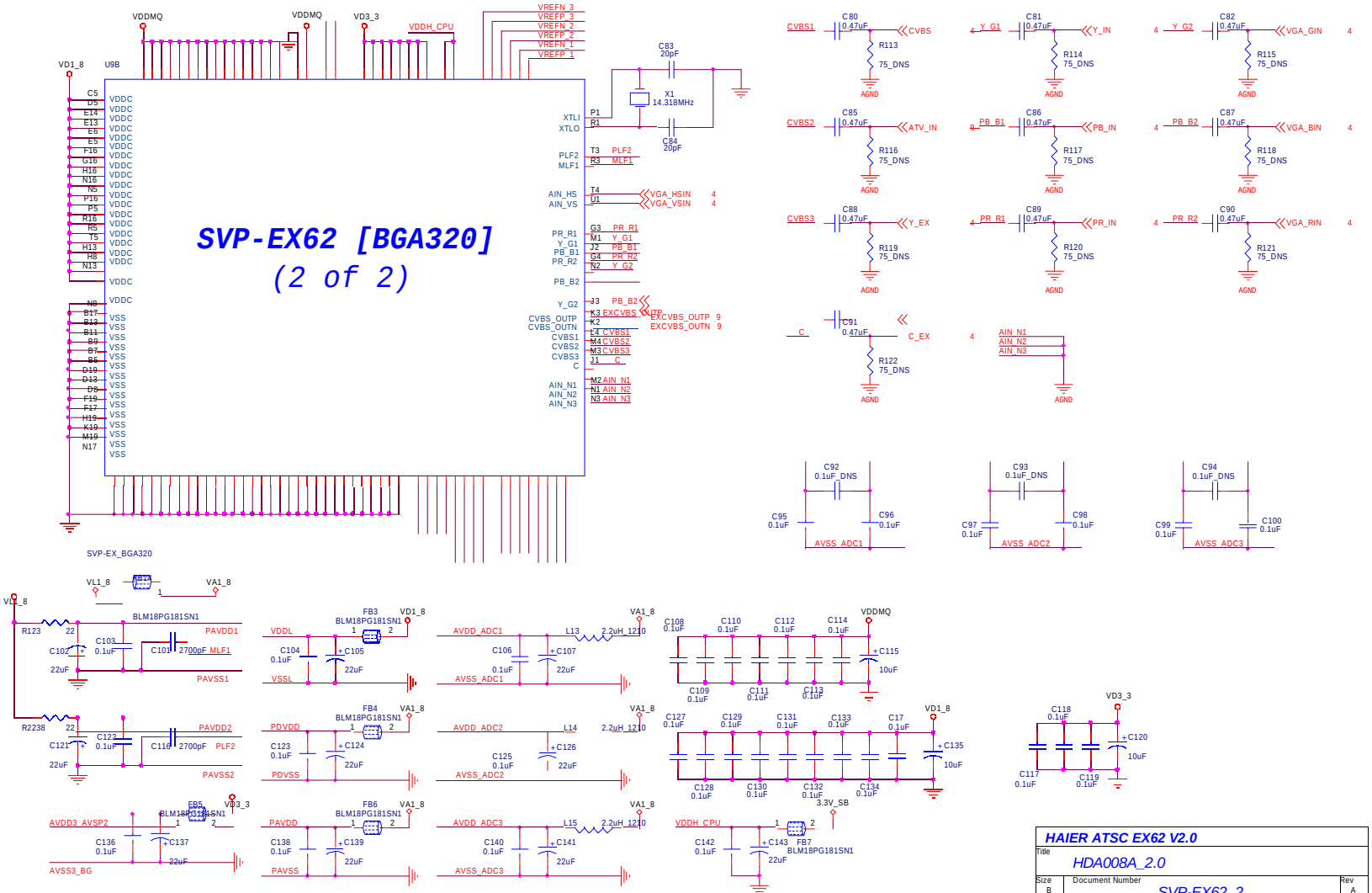

HAIER ATSC EX62 V2.0

Title: HDA008A_2.0

Size: B | Document Number: SVP-EX62_2 | Rev: A

Date: Tuesday, February 28, 2006 | Sheet 7 of 24

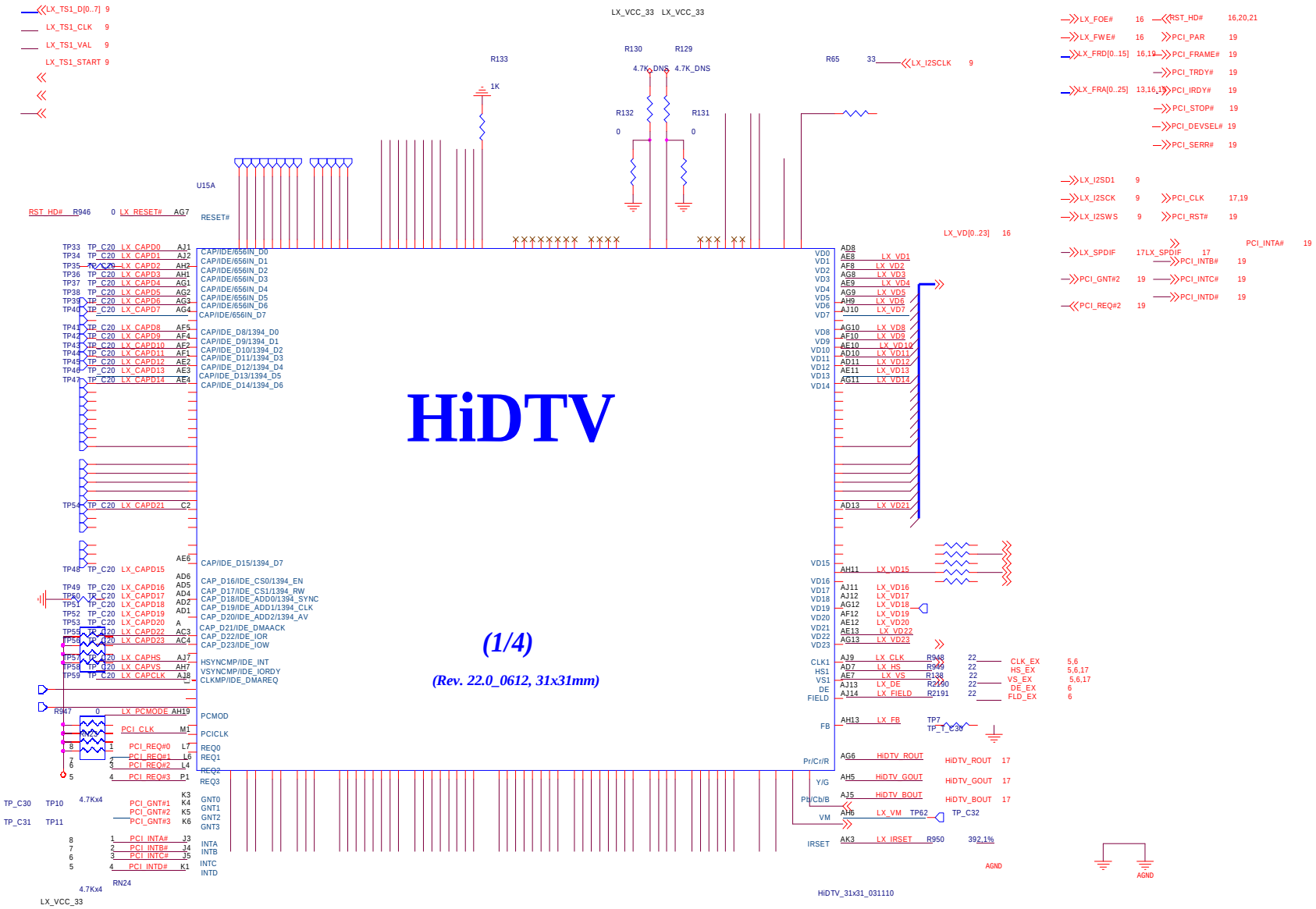

Title	HAIER ATSC EX62 V2.0
	HDA008A_2.0
Size B	Document Number: HiDTV-LX (1/4) - BOT/LEFT — Rev A
Date: Tuesday, February 28, 2006	Sheet 10 of 24

□□

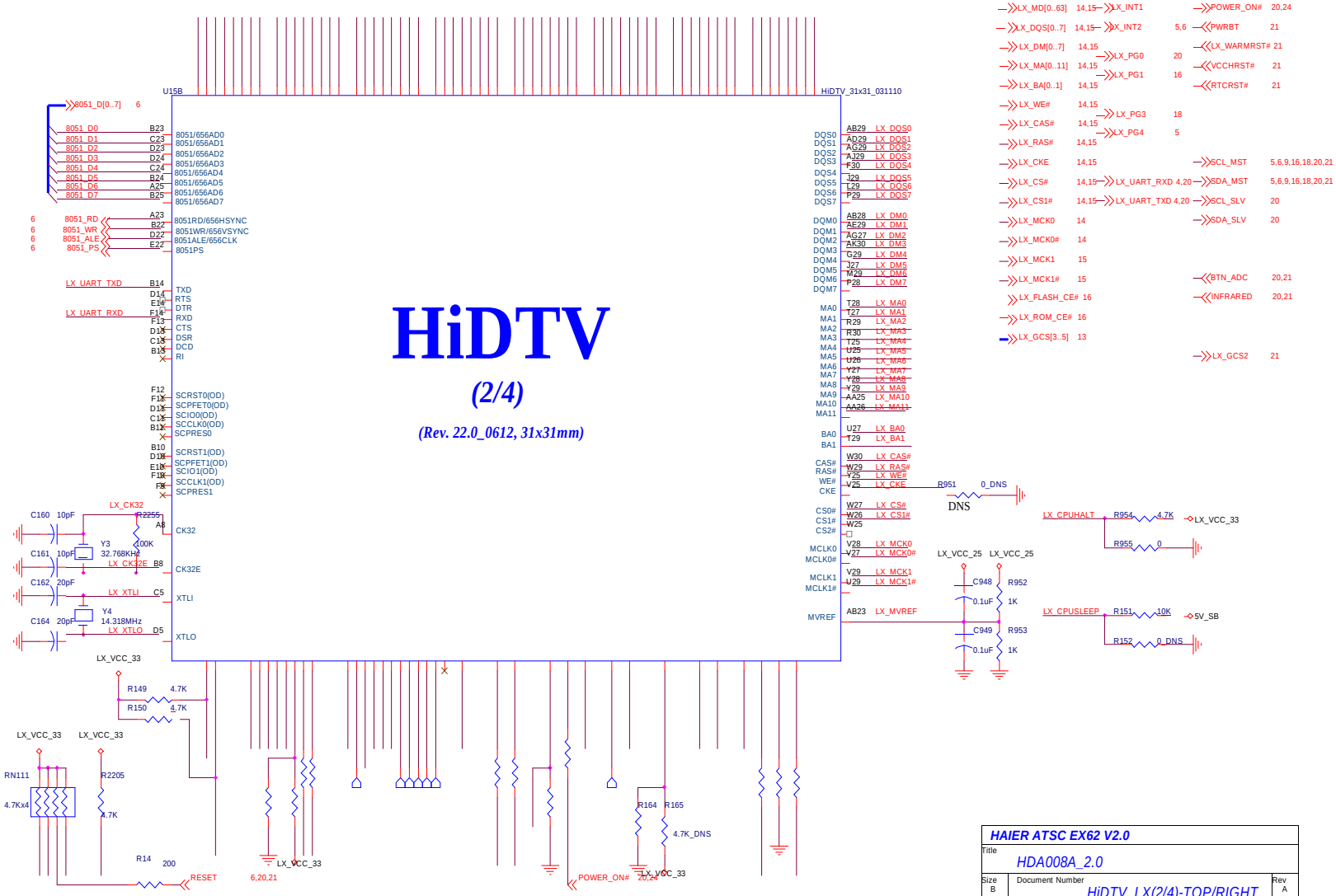

HAIER ATSC EX62 V2.0		
Title: HDA008A_2.0		
Size: B	Document Number: HiDTV_LX(2/4)-TOP/RIGHT	Rev: A
Date: Tuesday, February 28, 2006	Sheet 11 of 24	

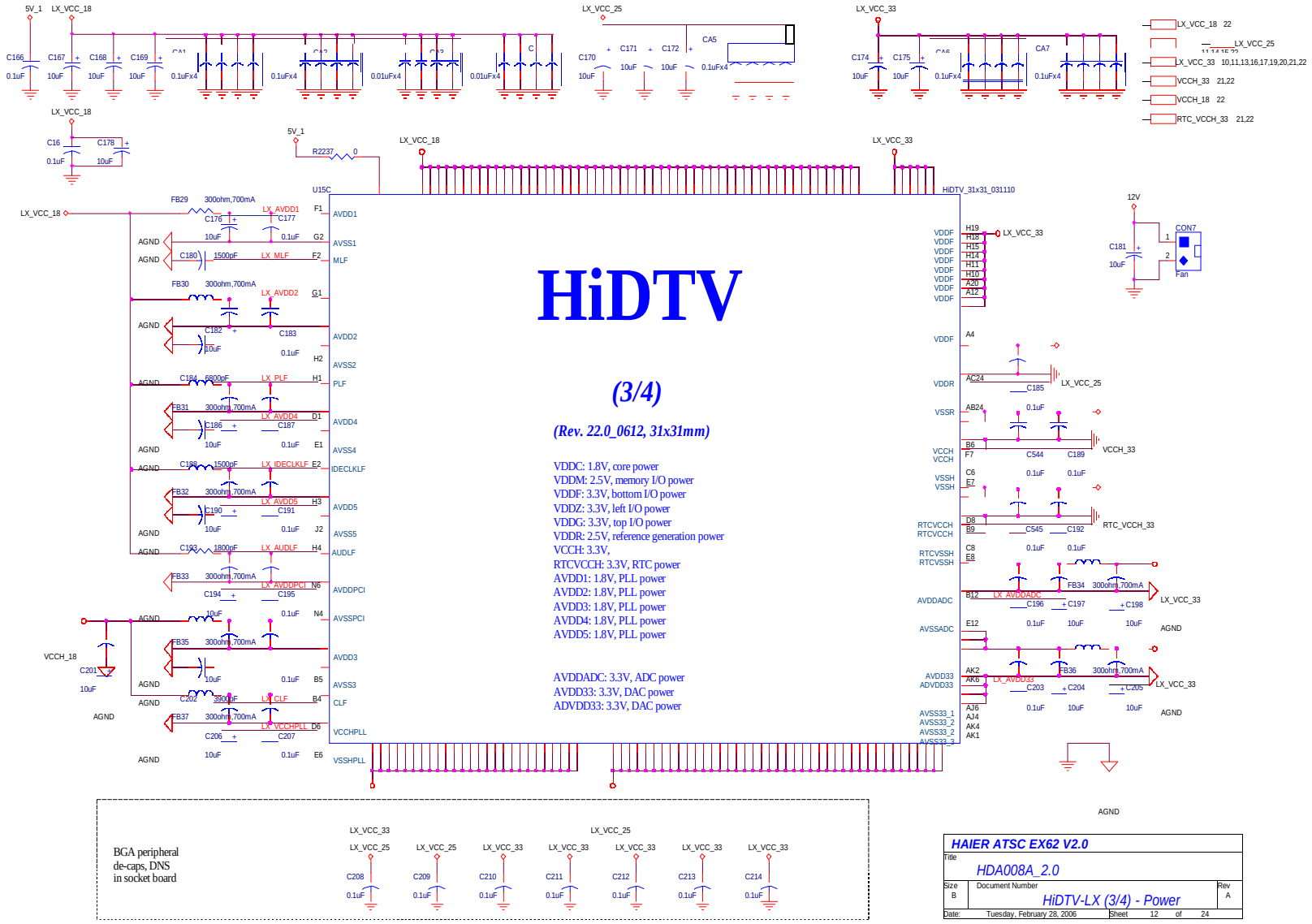

Title	HAIER ATSC EX62 V2.0
	HDA008A_2.0
Size B	Document Number: HiDTV-LX (3/4) - Power
Rev A	
Date: Tuesday, February 28, 2006	Sheet 12 of 24

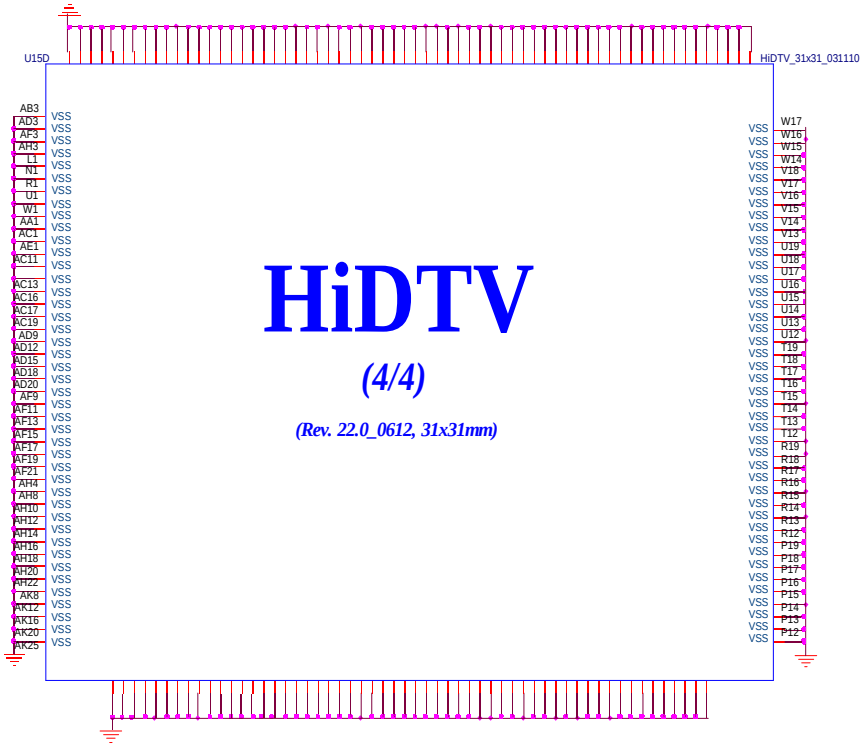

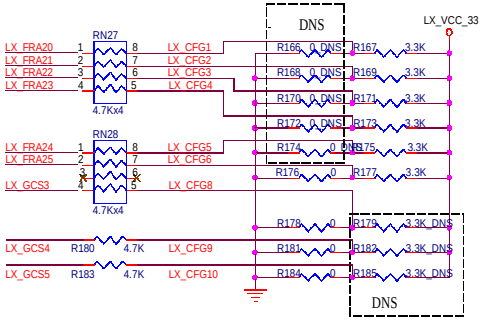

No	PIN	Configure Pin	Description	Setting
1	FRA20	PIN_REG_DDR	For UMAC type configure	
2	FRA21	PIN_REG_TYPE0		
3	FRA22	PIN_REG_TYPE1		
4	FRA23	PIN_REG_TYPE2		
5	FRA24	PIN_REG8051EN		
6	FRA25	ROMSIZ0	Data Bus Width	1: 16-bit Data Bus (Flash Bootup) 0: 8-bit Data Bus (EEPROM Bootup)
7	GCS2	CONM_SN		1: Slave; 0: Master
8	GCS3	ENDIAN_SEL[0]	MIPS ENDIAN Mode	Default: 2'b00
9	GCS4	ENDIAN_SEL[1]		
10	GCS5	M68K_PCI_SEL	M68K/PCI select	1: M68K/Flash; 0: PCI/Flash

HAIER ATSC EX62 V2.0			
Title	HDA008A_2.0		
Size B	Document Number	HiDTV-LX (4/4) - GND, Configure	Rev A
Date: Tuesday, February 28, 2006	Sheet 13 of 24		

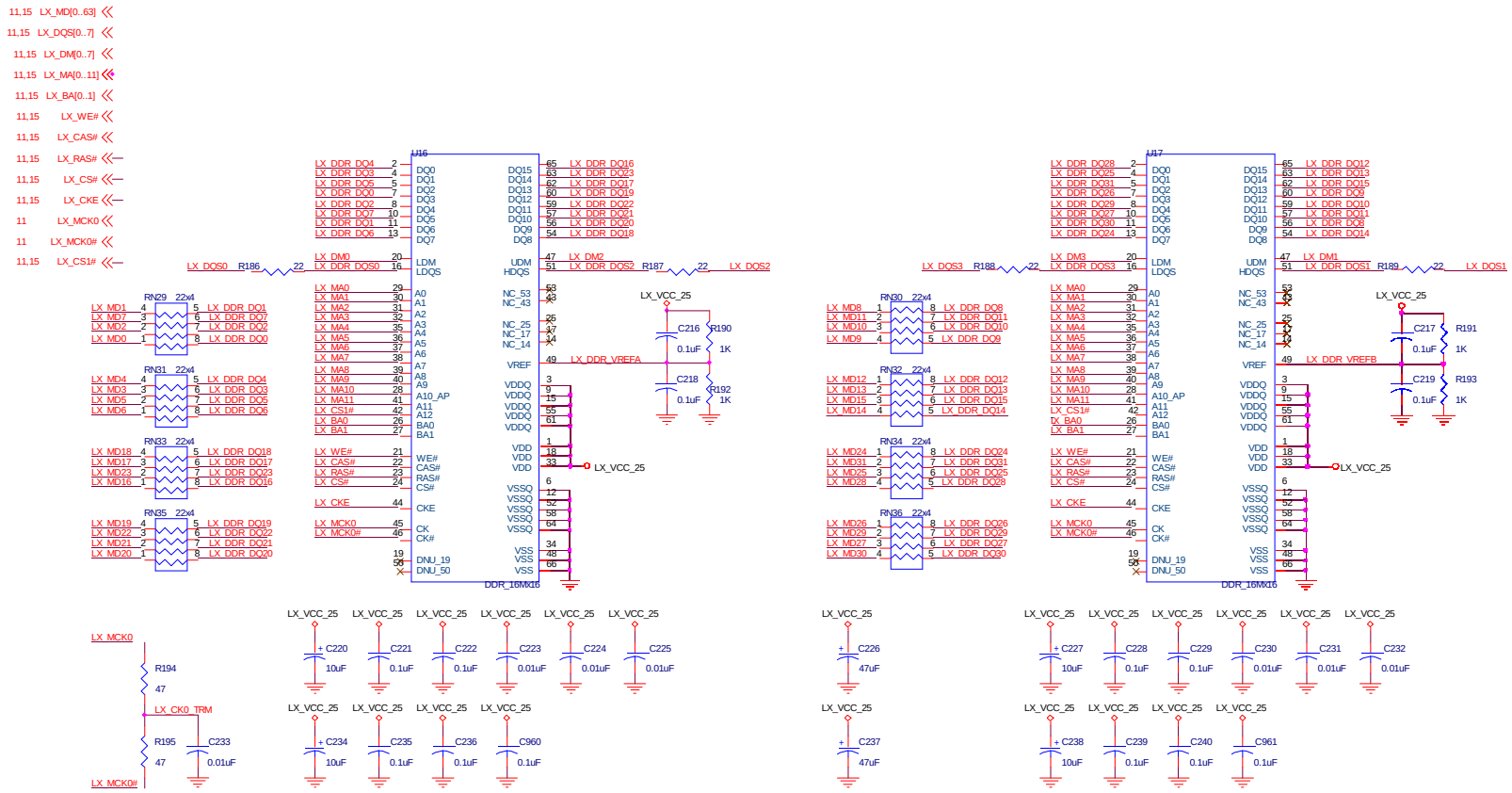

HAIER ATSC EX62 V2.0		
Title: HDA008A_2.0		
Size: B	Document Number: HiDTV_LX DDR(1/2)	Rev: A
Date: Tuesday, February 28, 2006	Sheet 14 of 24	

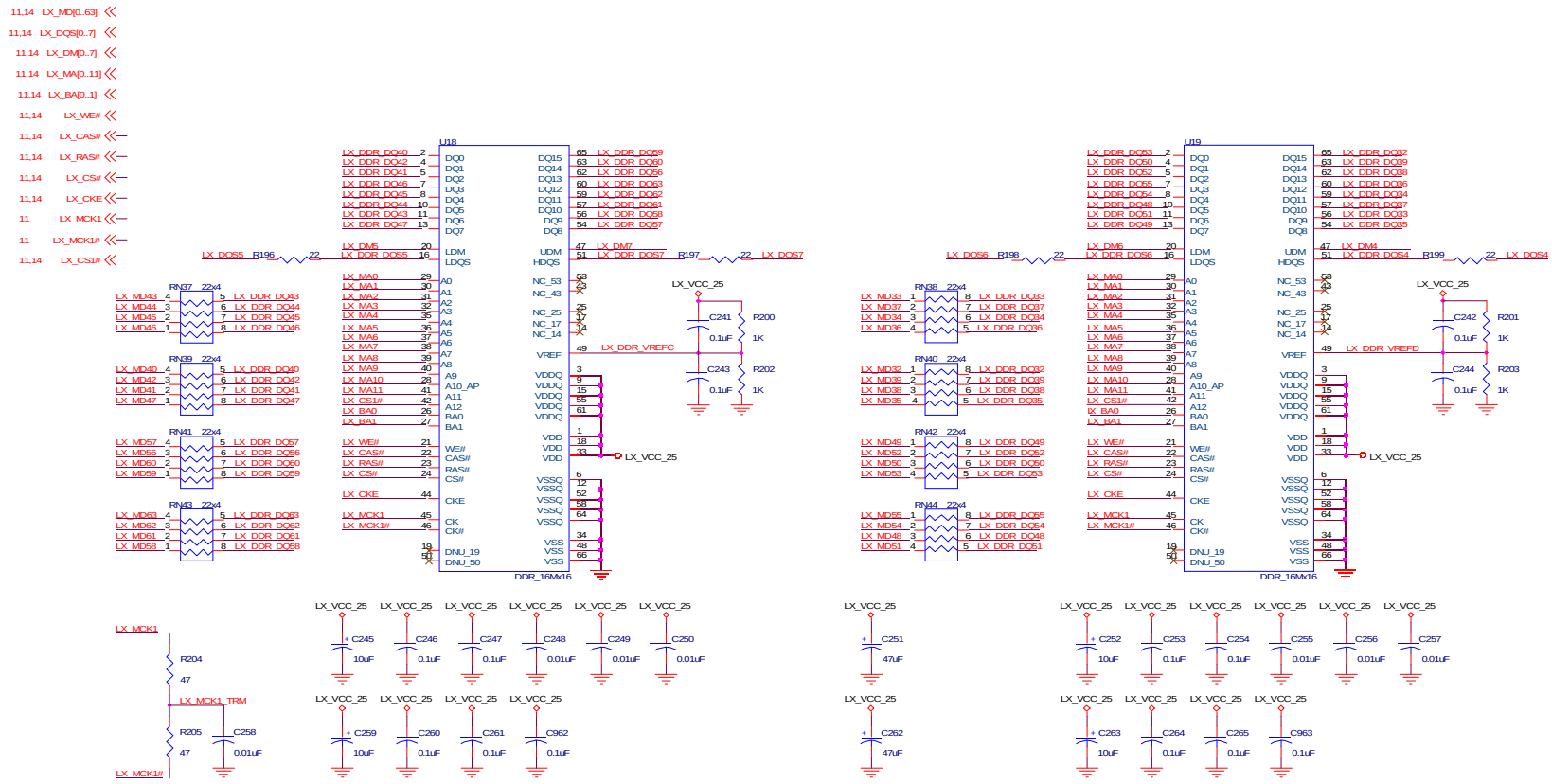

HAIER ATSC EX62 V2.0		
Title: HDA008A_2.0		
Size: B	Document Number: HiDTV_LX DDR(2/2)	Rev: A
Date: Tuesday, February 28, 2006	Sheet 15 of 24	

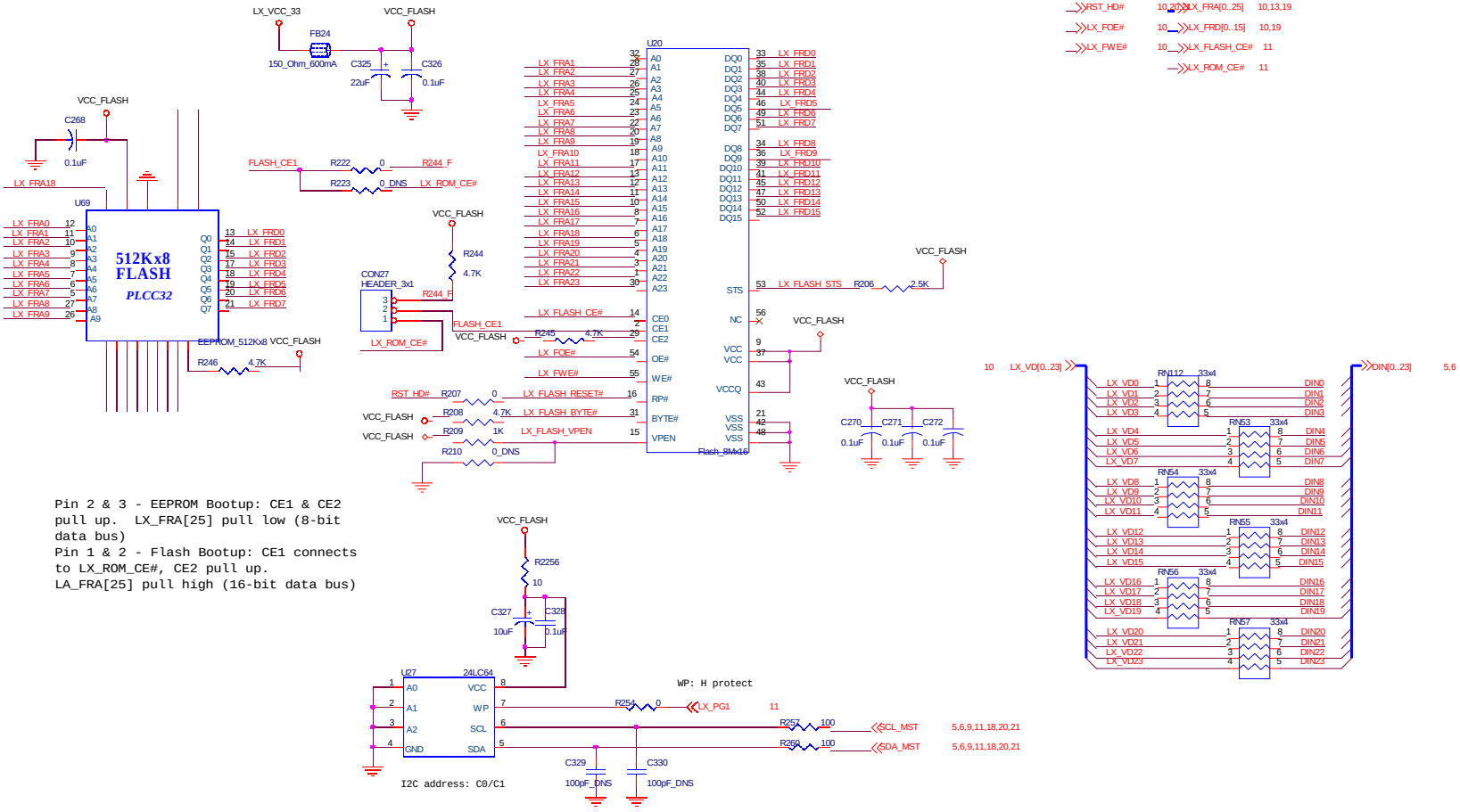

Pin 2 & 3 - EEPROM Bootup: CE1 & CE2 pull up. LX_FRA[25] pull low (8-bit data bus)
Pin 1 & 2 - Flash Bootup: CE1 connects to LX_ROM_CE#, CE2 pull up. LA_FRA[25] pull high (16-bit data bus)

HAIER ATSC EX62 V2.0			
Title: HDA008A_2.0			
Size: B	Document Number: HiDTV_LX ROM Flash		Rev: A
Date: Tuesday, February 28, 2006	Sheet 16 of 24		

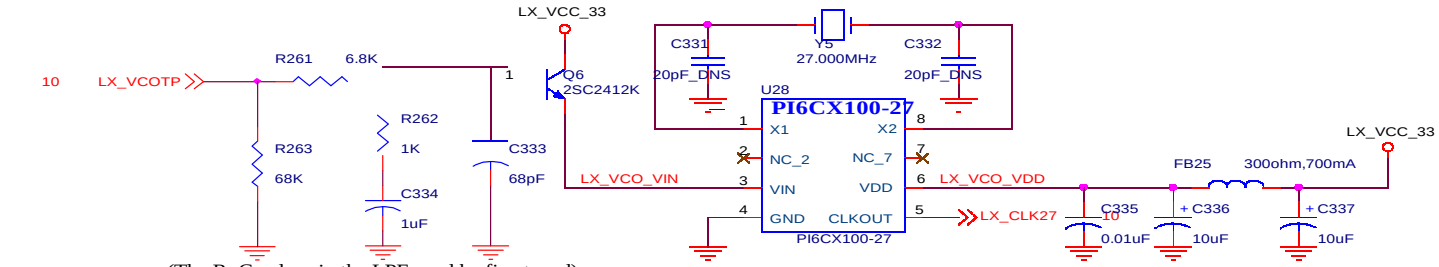

(The R, C values in the LPF need be fine tuned)

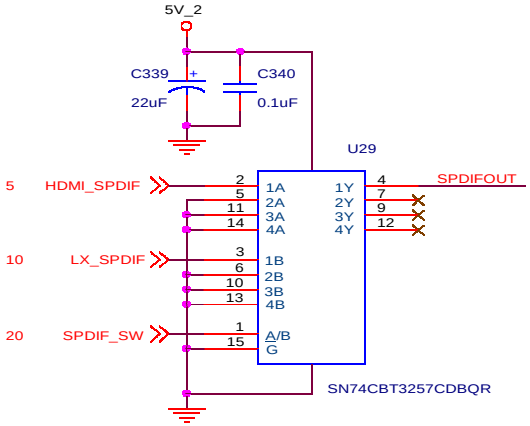

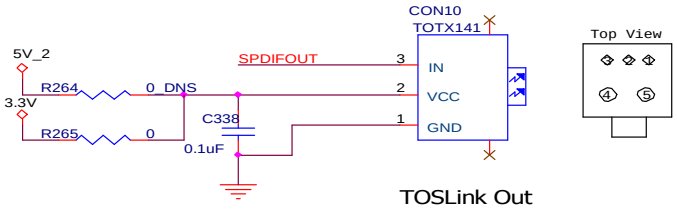

TOSLink Out

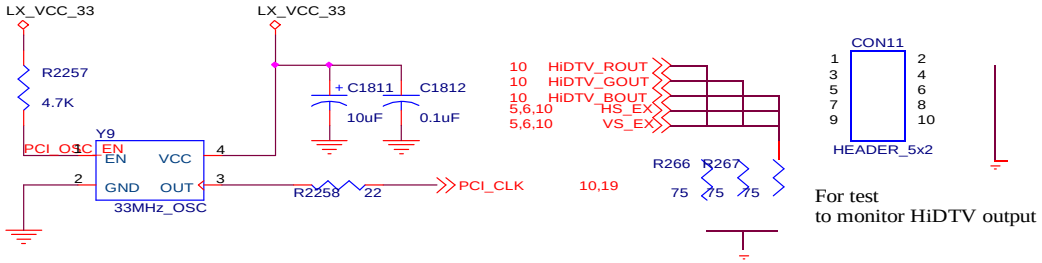

For test
to monitor HiDTV output

HAIER ATSC EX62 V2.0		
Title: HDA008A_2.0		
Size: A	Document Number: VCO, SPDIF	Rev: A
Date: Tuesday, February 28, 2006	Sheet 17 of 24	

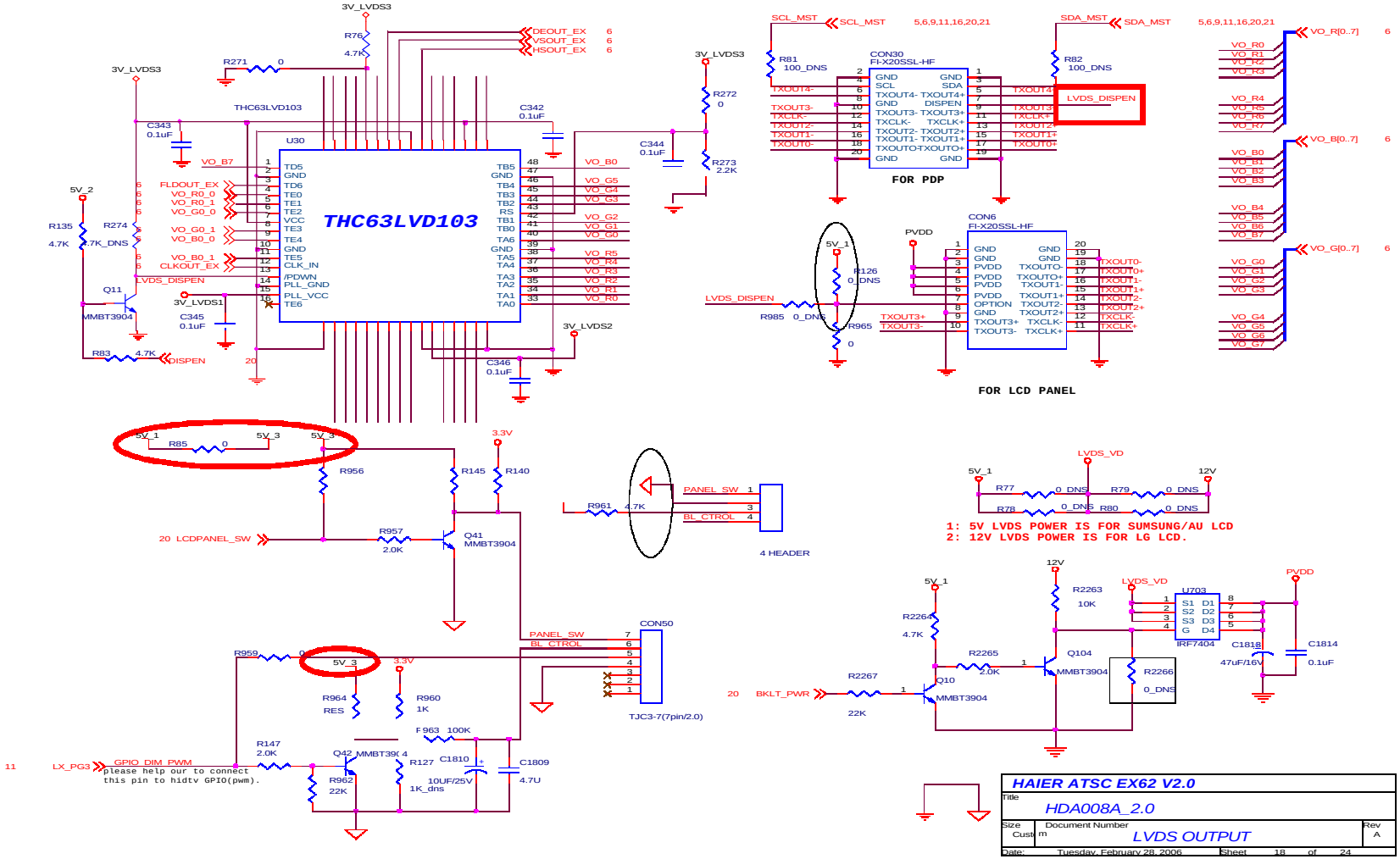
THC63LVD103
U30
FOR PDP
CON30
FI-X20SSL-HF
FOR LCD PANEL
CON6
FI-X20SSL-HF
1: 5V LVDS POWER IS FOR SUMSUNG/AU LCD
2: 12V LVDS POWER IS FOR LG LCD.
4 HEADER
CON50
TJC3-7(7pin/2.0)
please help our to connect
this pin to hidtv GPIO(pwm).
HAIER ATSC EX62 V2.0
HDA008A_2.0
LVDS OUTPUT
Tuesday, February 28, 2006
Sheet 18 of 24

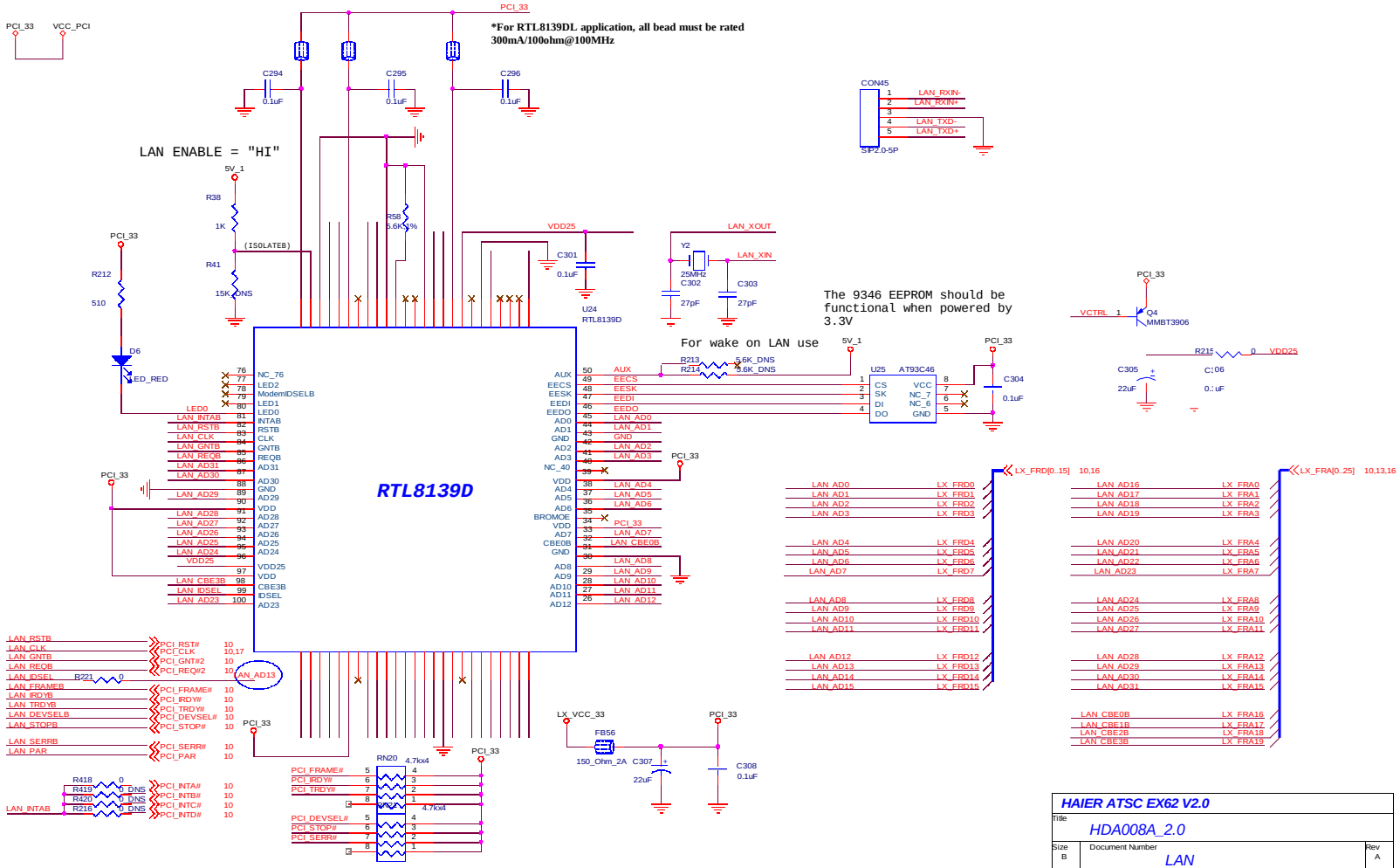

HAIER ATSC EX62 V2.0	
Title	HDA008A_2.0
Size B	Document Number: LAN — Rev A
Date: Tuesday, February 28, 2006	Sheet 19 of 24

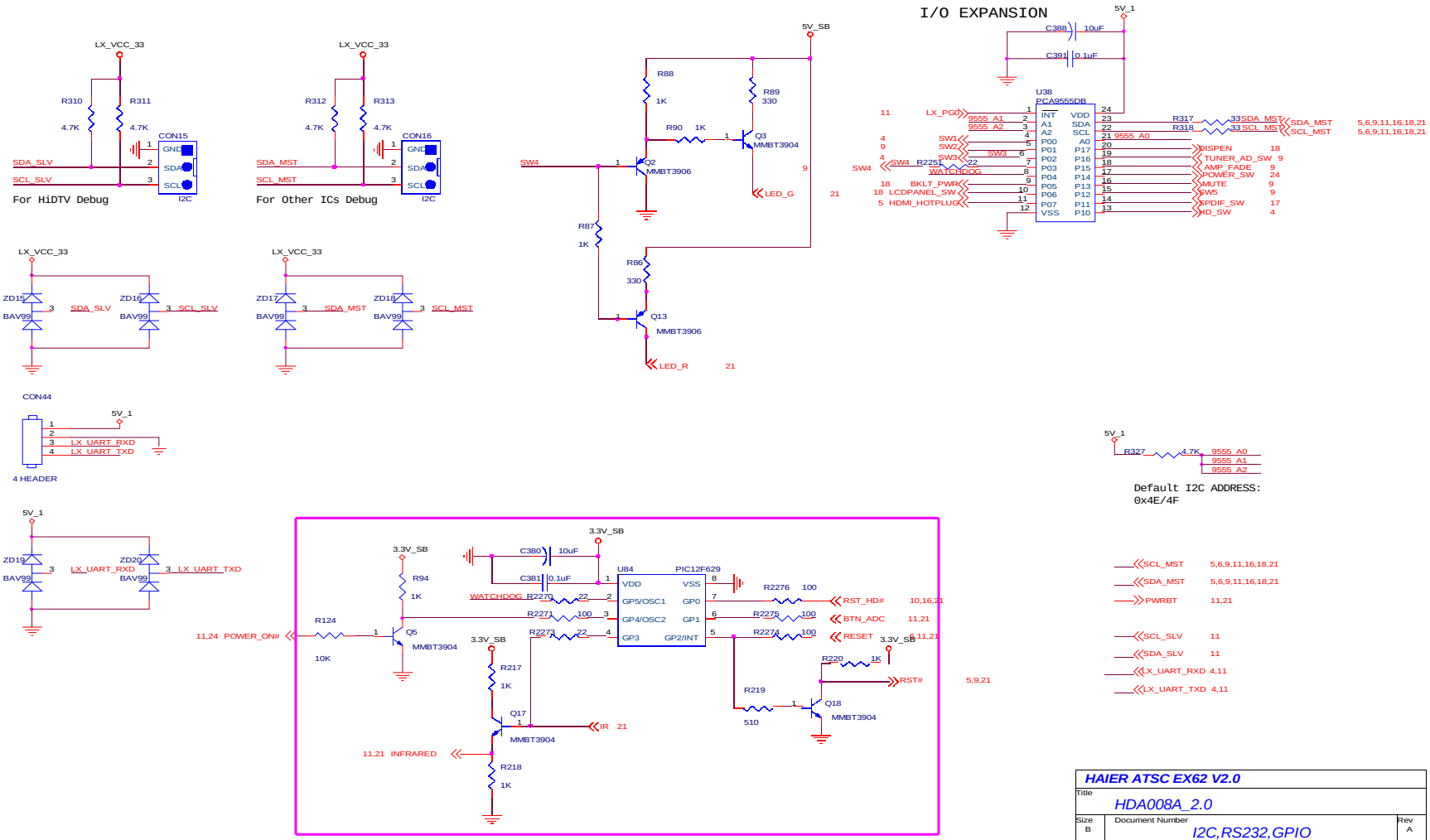

HAIER ATSC EX62 V2.0		
Title	HDA008A_2.0	
Size B	Document Number I2C,RS232,GPIO	Rev A
Date: Tuesday, February 28, 2006	Sheet 20 of 24	

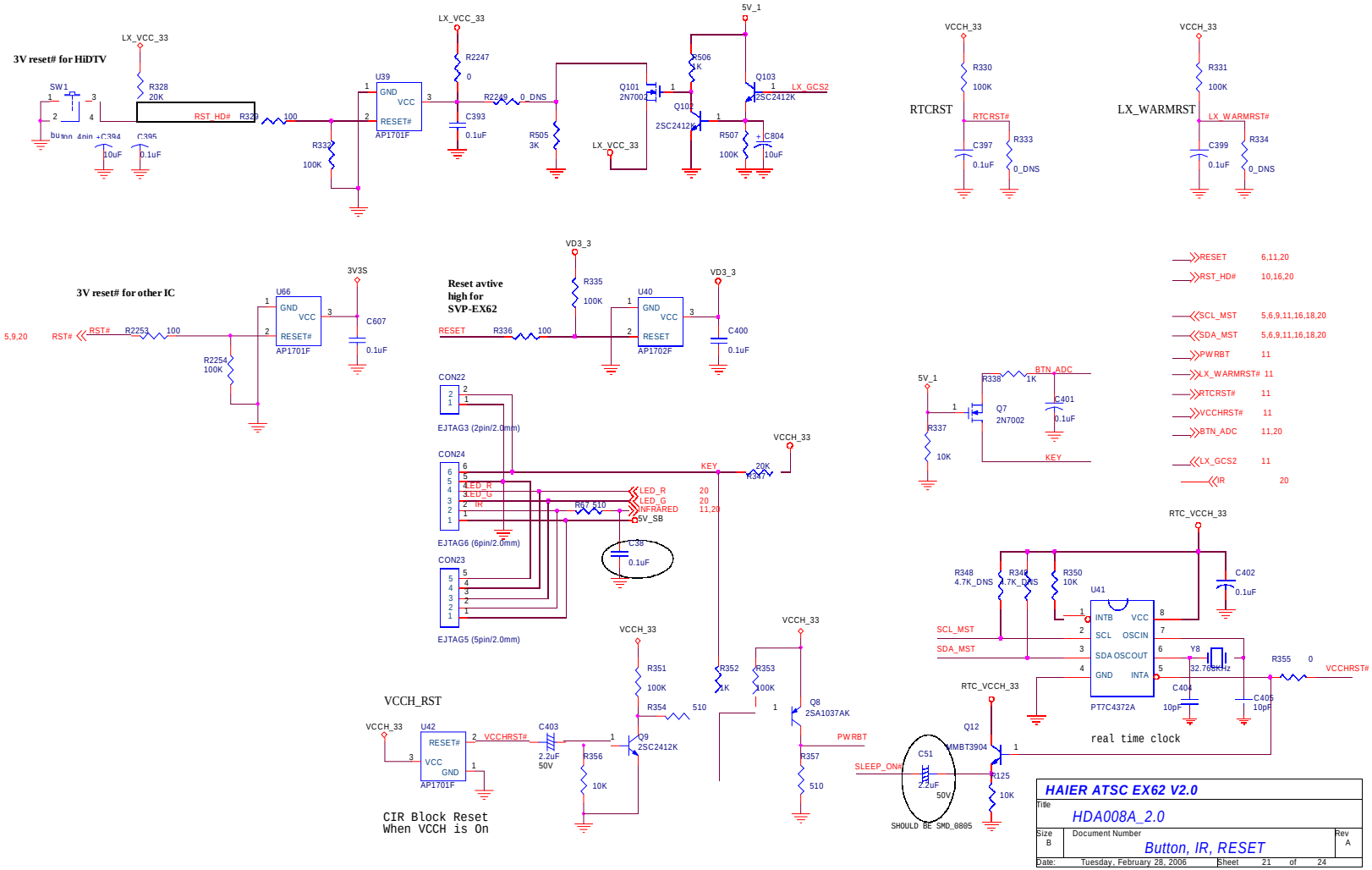
3V reset# for HiDTV
LX_VCC_33
SW1
R328
20K
RST_HD#
R329
100
U39
GND
VCC
RESET#
AP1701F
R332
100K
C394
10uF
C395
0.1uF
R2247
0
C393
0.1uF
R2248
0_DNS
R505
3K
Q101
2N7002
R506
1K
Q102
2SC2412K
5V_1
Q103
2SC2412K
LX_GCS2
R507
100K
C804
10uF
VCCH_33
R330
100K
RTCRST
RTCRST#
C397
0.1uF
R333
0_DNS
R331
100K
LX_WARMRST
LX_WARMRST#
C399
0.1uF
R334
0_DNS
3V reset# for other IC
5,9,20
RST#
R2253
100
U66
GND
VCC
RESET#
AP1701F
3V3S
C607
0.1uF
R2254
100K
Reset avtive
high for
SVP-EX62
VD3_3
R335
100K
RESET
R336
100
U40
GND
VCC
RESET
AP1702F
C400
0.1uF
CON22
EJTAG3 (2pin/2.0mm)
CON24
EJTAG6 (6pin/2.0mm)
CON23
EJTAG5 (5pin/2.0mm)
LED_R
LED_G
IR
INFRARED
5V_SB
R67 510
C38
0.1uF
KEY
20K
R347
5V_1
R338
1K
BTN_ADC
Q7
2N7002
C401
0.1uF
R337
10K
RESET 6,11,20
RST_HD# 10,16,20
SCL_MST 5,6,9,11,16,18,20
SDA_MST 5,6,9,11,16,18,20
PWRBT 11
LX_WARMRST# 11
RTCRST# 11
VCCHRST# 11
BTN_ADC 11,20
LX_GCS2 11
IR 20
RTC_VCCH_33
R348
4.7K_DNS
R349
4.7K_DNS
R350
10K
C402
0.1uF
U41
INTB
VCC
SCL
OSCIN
SDA
OSCOUT
GND
INTA
PT7C4372A
Y8
32.768KHz
C404
10pF
C405
10pF
R355
0
VCCHRST#
real time clock
VCCH_RST
U42
RESET#
VCC
GND
AP1701F
C403
2.2uF
50V
R356
10K
R351
100K
R354
510
R352
1K
R353
100K
Q8
2SA1037AK
PWRBT
R357
510
Q12
MMBT3904
SLEEP_ON#
C51
2.2uF
50V
R125
10K
SHOULD BE SMD_0805
CIR Block Reset
When VCCH is On
HAIER ATSC EX62 V2.0
Title
HDA008A_2.0
Size
B
Document Number
Button, IR, RESET
Rev
A
Date: Tuesday, February 28, 2006
Sheet 21 of 24

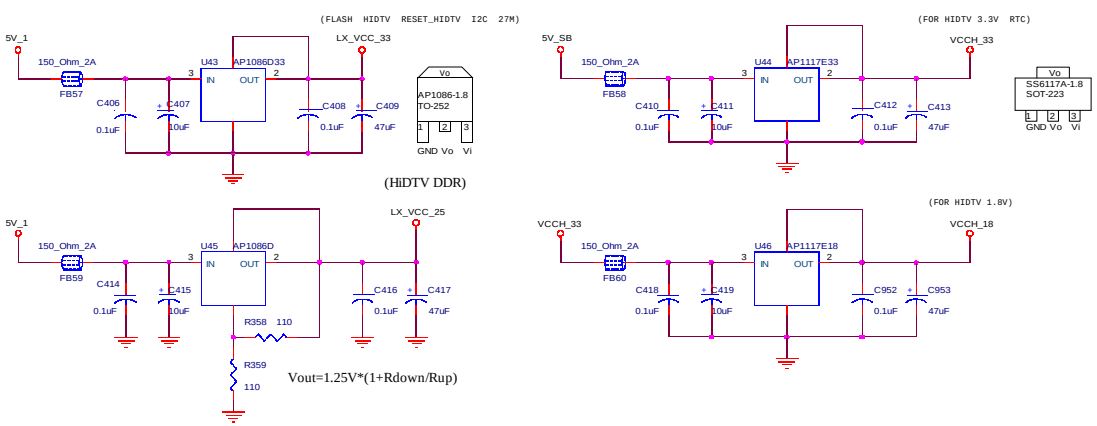

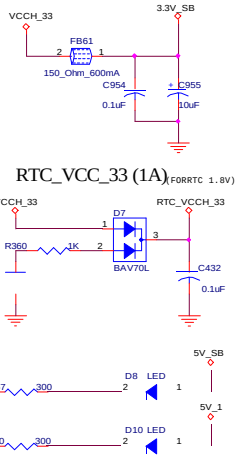

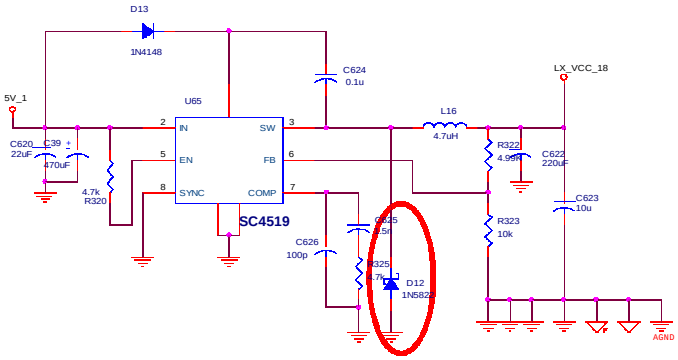

HAIER ATSC EX62 V2.0		
Title: HDA008A_2.0		
Size: B	Document Number: Power Supply - 1	Rev: A
Date: Tuesday, February 28, 2006	Sheet 22 of 24	

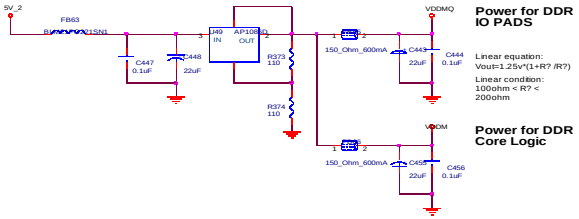

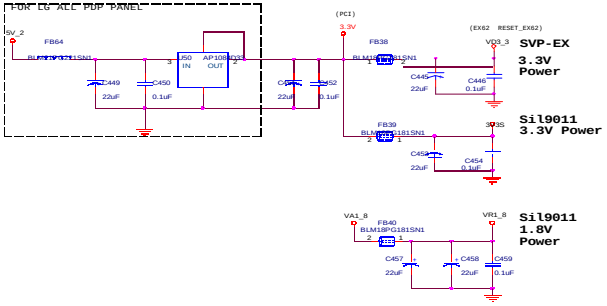

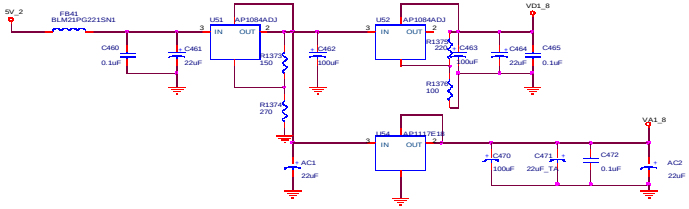

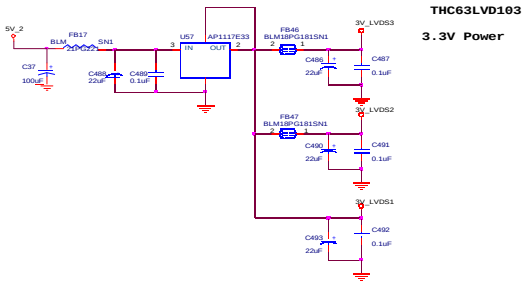

HAIER ATSC EX62 V2.0		
Title HDA008A_2.0		
Size C	Document Number Power Supply - 2	Rev A
Date: Tuesday, February 28, 2006	Sheet 23 of 24	

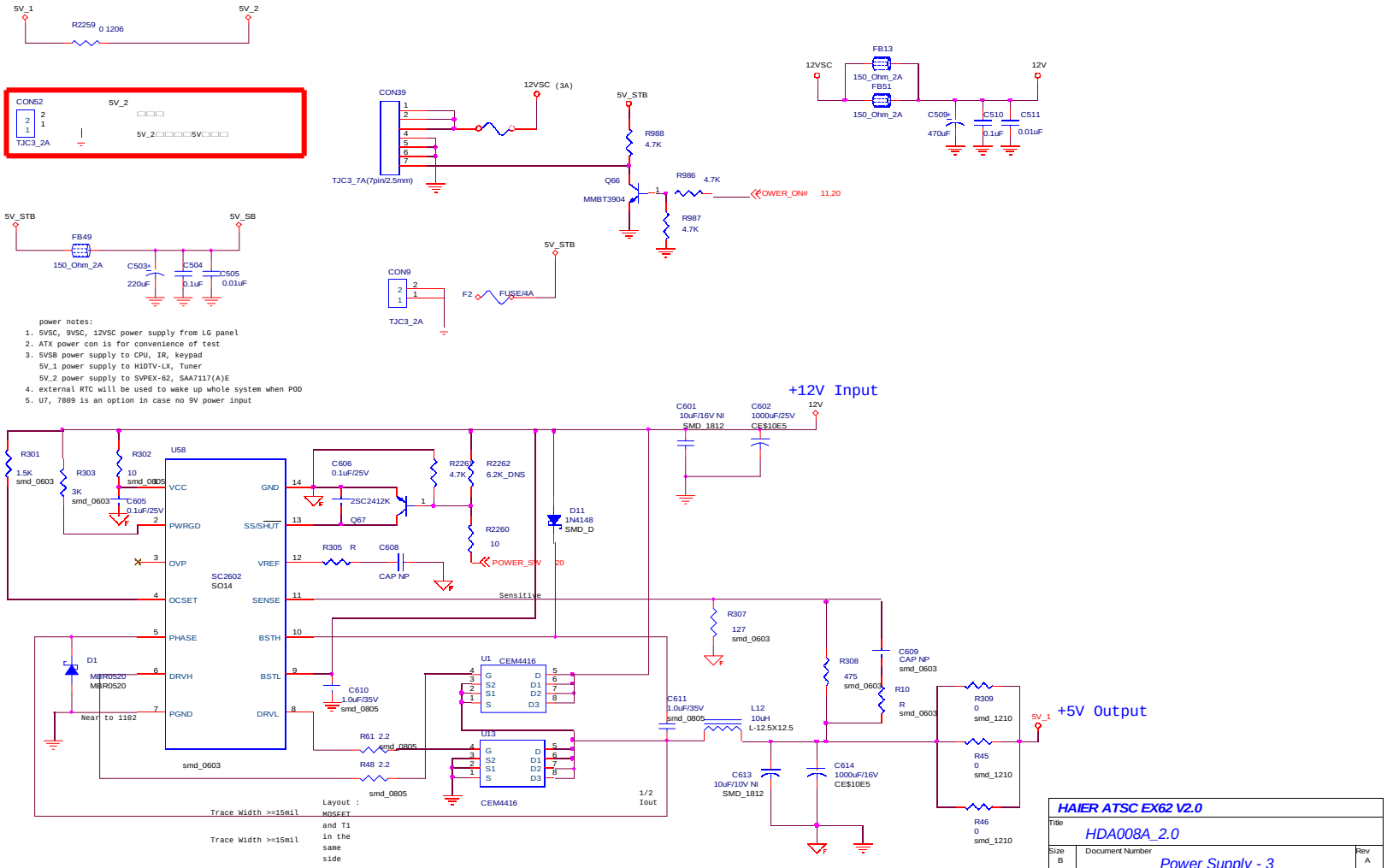
5V_1
R2259 0 1206
5V_2
CON52
TJC3_2A
5V_2
5V_2 5V
CON39
TJC3_7A(7pin/2.5mm)
12VSC (3A)
5V_STB
R988 4.7K
Q66
MMBT3904
R986 4.7K
POWER_ON/# 11,20
R987 4.7K
12VSC
FB13
150_Ohm_2A
FB51
150_Ohm_2A
12V
C509 470uF
C510 0.1uF
C511 0.01uF
5V_STB
FB49
150_Ohm_2A
5V_SB
C503 220uF
C504 0.1uF
C505 0.01uF
CON9
TJC3_2A
5V_STB
F2 FUSE/4A
power notes:
1. 5VSC, 9VSC, 12VSC power supply from LG panel
2. ATX power con is for convenience of test
3. 5VSB power supply to CPU, IR, keypad
5V_1 power supply to HiDTV-LX, Tuner
5V_2 power supply to SVPEX-62, SAA7117(A)E
4. external RTC will be used to wake up whole system when POD
5. U7, 7809 is an option in case no 9V power input
+12V Input
C601 10uF/16V NI SMD_1812
C602 1000uF/25V CE$10E5
12V
R301 1.5K smd_0603
R303 3K smd_0603
R302 10 smd_0805
C605 0.1uF/25V
U58
SC2602 SO14
VCC
PWRGD
OVP
OCSET
PHASE
DRVH
PGND
GND
SS/SHUT
VREF
SENSE
BSTH
BSTL
DRVL
C606 0.1uF/25V
2SC2412K
Q67
R2262 4.7K
R2262 6.2K_DNS
R2260 10
POWER_SW 20
D11 1N4148 SMD_D
R305 R
C608 CAP NP
Sensitive
D1 MBR0520
Near to 1102
C610 1.0uF/35V smd_0805
R61 2.2 smd_0805
R48 2.2 smd_0805
smd_0603
U1 CEM4416
U13 CEM4416
Trace Width >=15mil
Layout : MOSFET and T1 in the same side
Trace Width >=15mil
1/2 Iout
R307 127 smd_0603
R308 475 smd_0603
C609 CAP NP smd_0603
R10 R smd_0603
C611 1.0uF/35V smd_0805
L12 10uH L-12.5X12.5
C613 10uF/10V NI SMD_1812
C614 1000uF/16V CE$10E5
R309 0 smd_1210
R45 0 smd_1210
R46 0 smd_1210
5V_1
+5V Output
HAIER ATSC EX62 V2.0
Title
HDA008A_2.0
Size B
Document Number
Power Supply - 3
Rev A
Date: Tuesday, February 28, 2006
Sheet 24 of 24

b) Audio Board

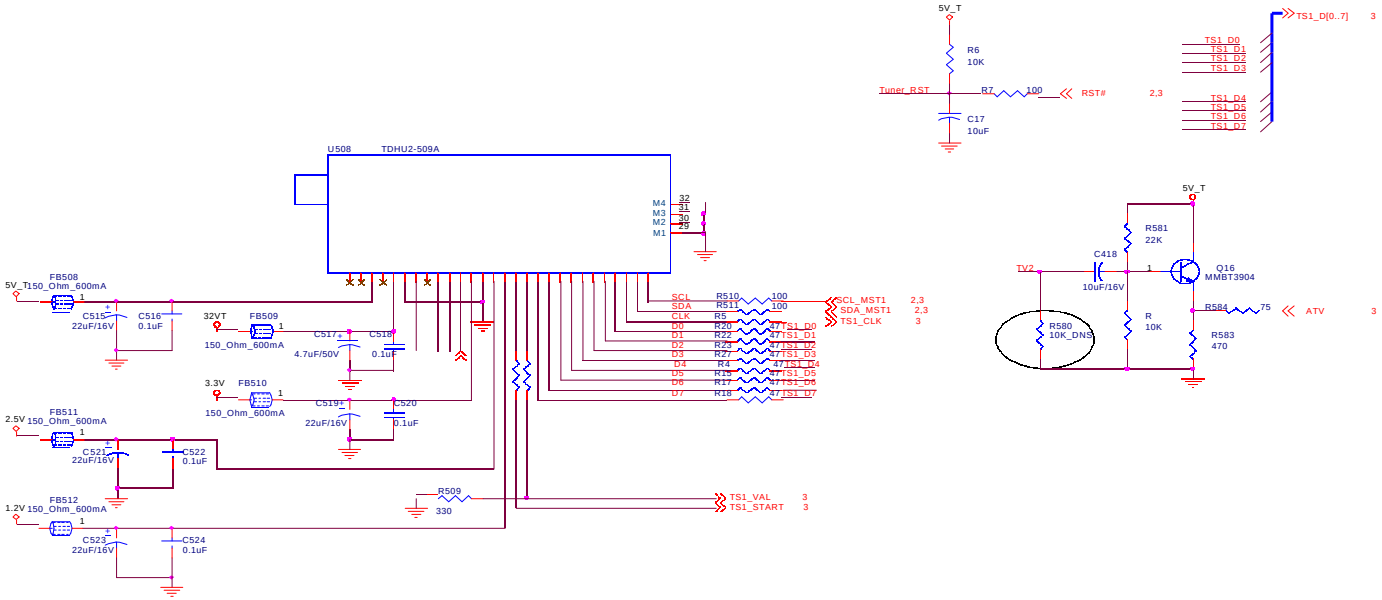

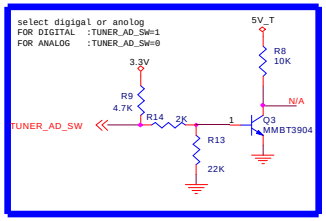

	Title	
	TDA008A	
Schematic Name		Rev
Tuner		A
Size B	Sheet 1 of 4	Date: Tuesday, February 28, 2006

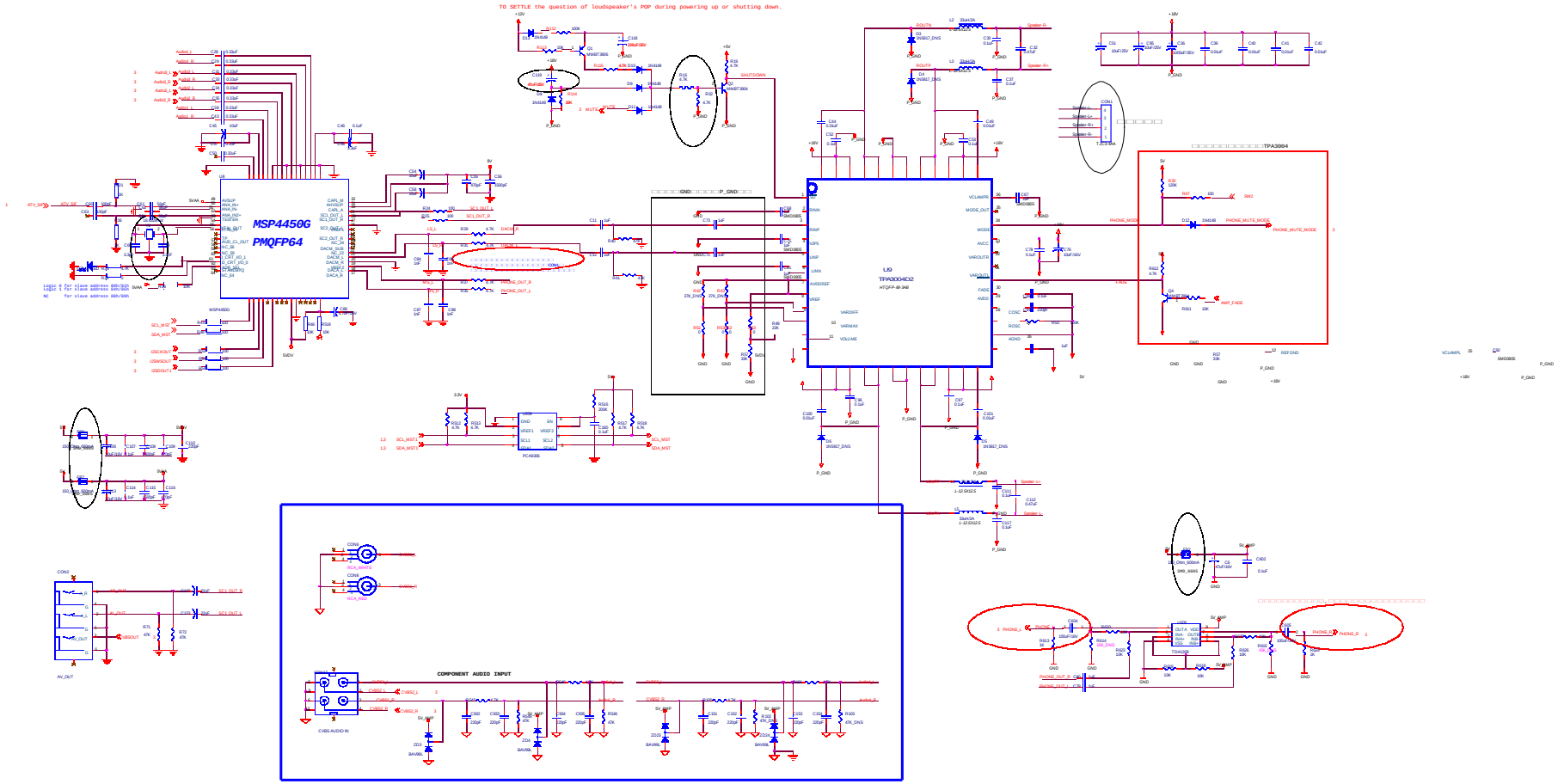
TO SETTLE the question of loudspeaker's POP during powering up or shutting down.
MSP4450G
PMQFP64
TPA3004D2
TPA3004
COMPONENT AUDIO INPUT
HAIER ATSC EX62 V2.0
TDA008A_2.0
Audio Processor

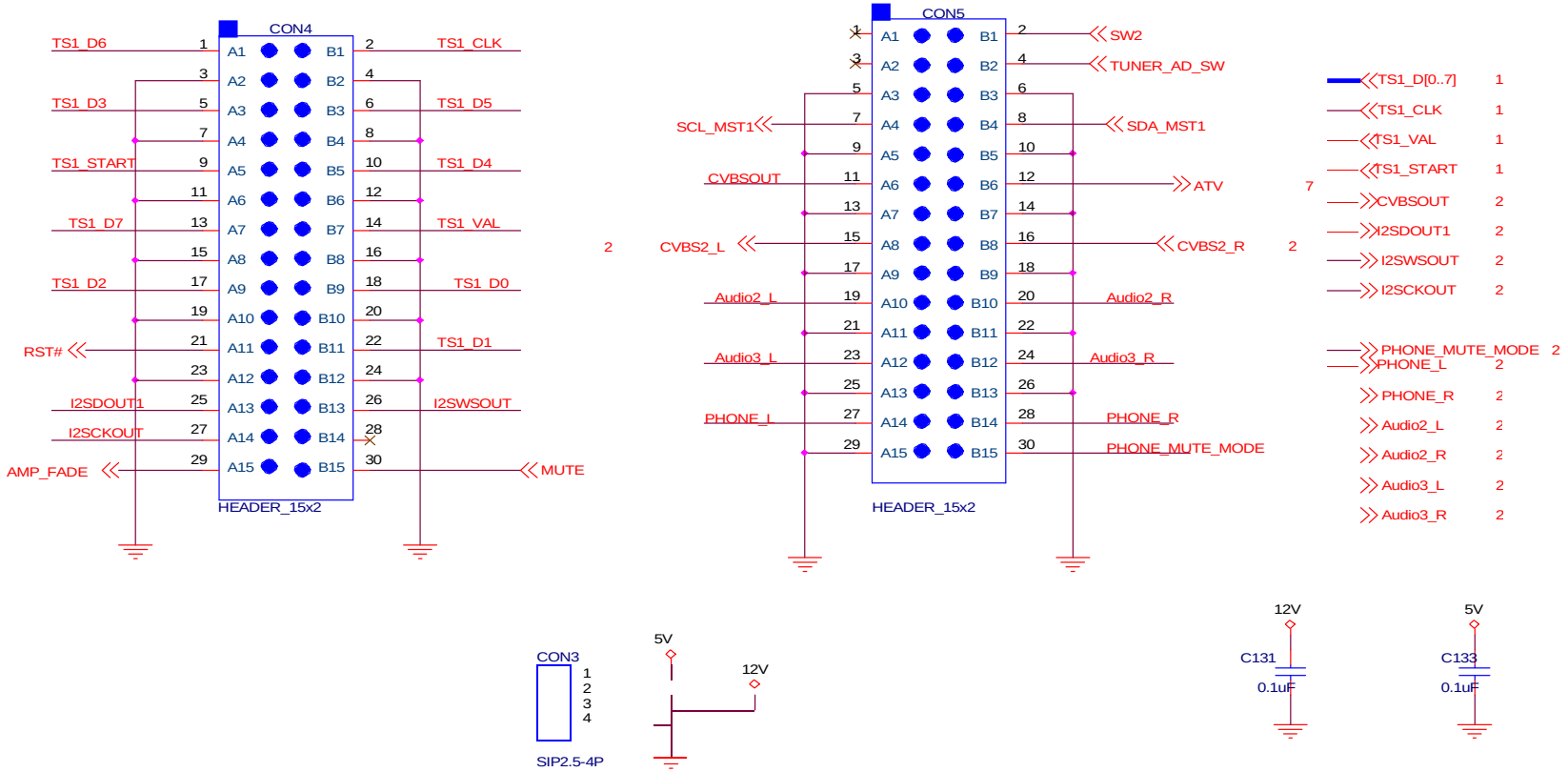

	Title	
	TDA008A	
Schematic Name		Rev
Interface		*A*
Size A	Sheet *3 of 4*	Date: Tuesday, February 28, 2006

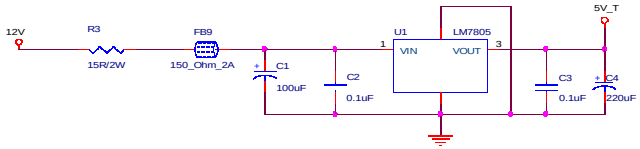

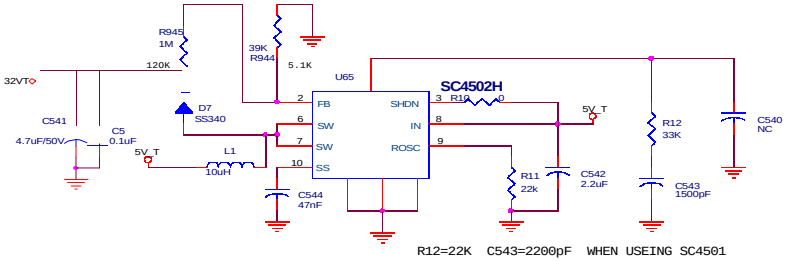

R12=22K C543=2200pF WHEN USEING SC4501

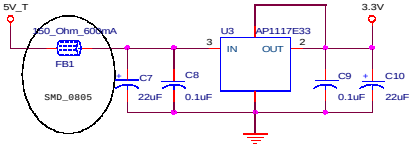

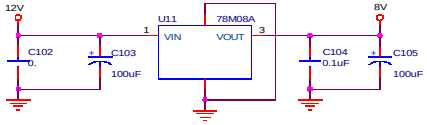

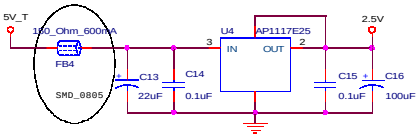

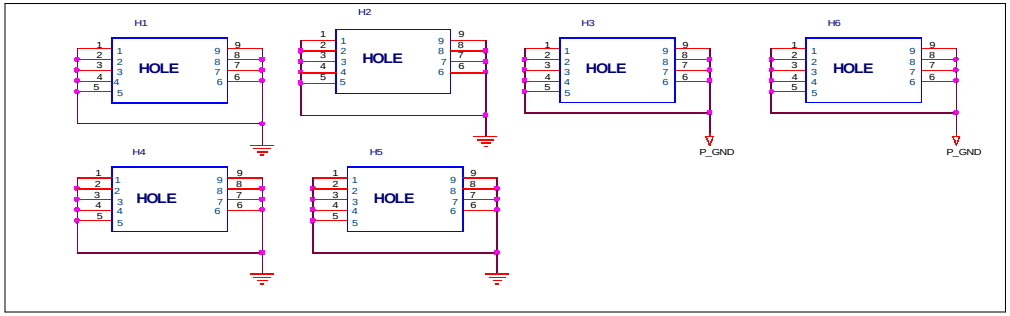

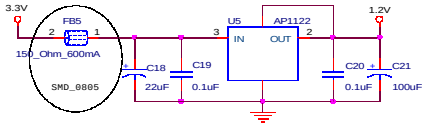

IF Vamp>16.5V pls Assemble R28 to drop 2V.
otherwise assemble R39

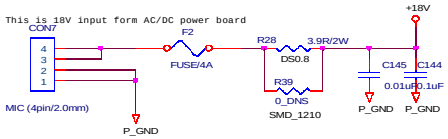

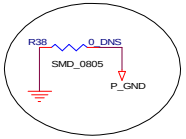

	Title	
	TDA008A	
Schematic Name		Rev
Power		A
Size B	Sheet 4 of 4	Date: Tuesday, February 28, 2006
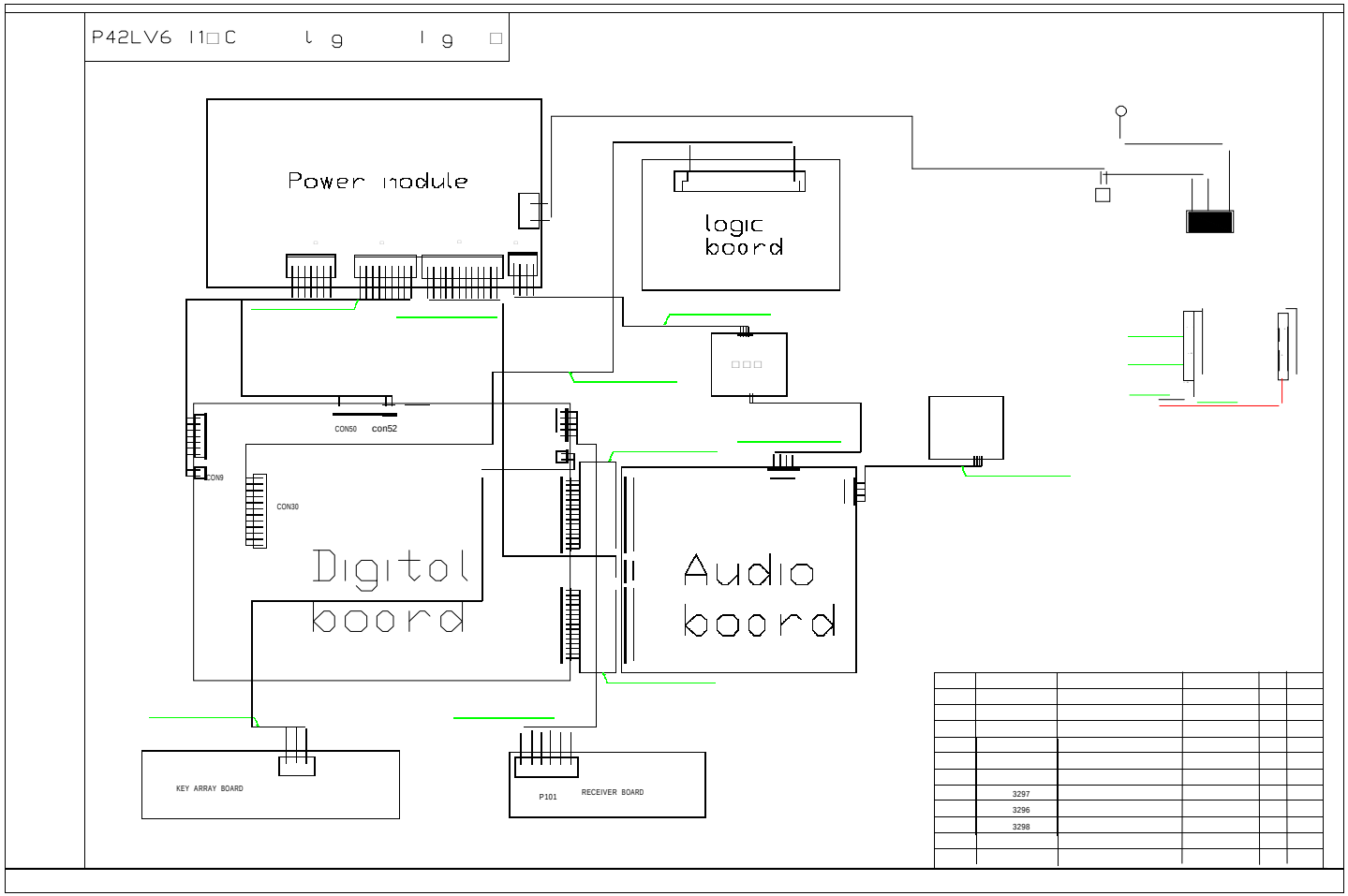
Connection Sketch Interpretat