HITACHI

SM0774

RAS-14EH1/RAC-14EH1

SERVICE MANUAL

TECHNICAL INFORMATION

REFER TO THE FOUNDATION MANUAL

FOR SERVICE PERSONNEL ONLY

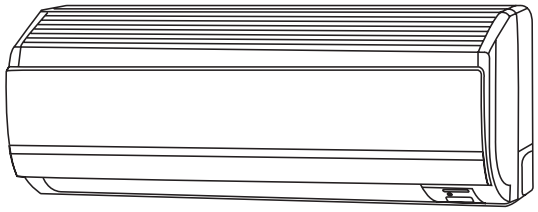

RAS-14EH1

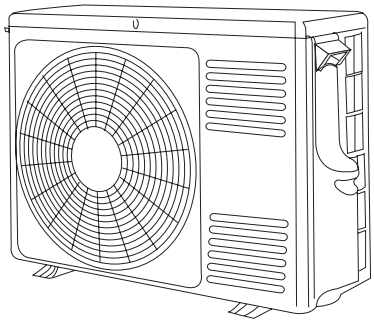

RAC-14EH1

CONTENTS

SPECIFICATIONS ---- 4
HOW TO USE ---- 5
CONSTRUCTION AND DIMENSIONAL DIAGRAM ---- 15
MAIN PARTS COMPONENT ---- 17
WIRING DIAGRAM ---- 19
CIRCUIT DIAGRAM ---- 20
BLOCK DIAGRAM ---- 22
BASIC MODE ---- 23
REFRIGERATING CYCLE DIAGRAM ---- 29
DESCRIPTION OF MAIN CIRCUIT OPERATION ---- 30
SERVICE CALL Q & A ---- 58
TROUBLE SHOOTING ---- 61
PROCEDURE FOR DISASSEMBLY AND REASSEMBLY ---- 87
PARTS LIST AND DIAGRAM ---- 89

SPECIFICATIONS

TYPE			DC INVERTER (WALL TYPE)	
			INDOOR UNIT	OUTDOOR UNIT
MODEL			RAS-14EH1	RAC-14EH1
POWER SOURCE			1 PHASE, 50 Hz, 220-230V	
COOLING	TOTAL INPUT	(W)	1,090 (155 ~ 1,460)	
	TOTAL AMPERES	(A)	5.22-4.99	
	CAPACITY	(kW)	3.50 (0.90 ~ 4.00)	
		(B.T.U./h)	11,940 (3,070 ~ 13,650)	
HEATING	TOTAL INPUT	(W)	1,110 (115 ~ 1,440)	
	TOTAL AMPERES	(A)	5.32-5.09	
	CAPACITY	(kW)	4.20 (0.90 ~ 5.00)	
		(B.T.U./h)	14,330 (3,070 ~ 17,060)	
DIMENSIONS (mm)		W	780	750 (+91)※
		H	280	548
		D	220	288 (+47)※
NET WEIGHT		(kg)	9.5	35

※ After installation

SPECIFICATIONS AND PARTS ARE SUBJECT TO CHANGE FOR IMPROVEMENT

ROOM AIR CONDITIONER

INDOOR UNIT + OUTDOOR UNIT

FEBRUARY 2007 Hitachi Appliances, Inc.

SAFETY DURING REPAIR WORK

1. In order to disassemble and repair the unit in question, be sure to disconnect the power cord plug from the power outlet before starting the work.

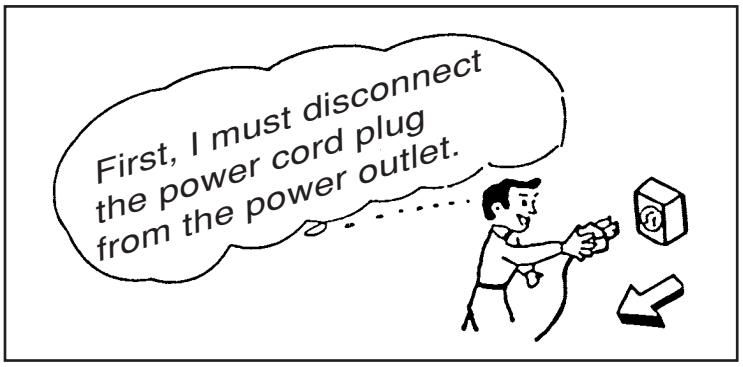

2. If it is necessary to replace any parts, they should be replaced with respective genuine parts for the unit, and the replacement must be effected in correct manner according to the instructions in the Service Manual of the unit.

   If the contacts of electrical parts are defective, replace the electrical parts without trying to repair them.

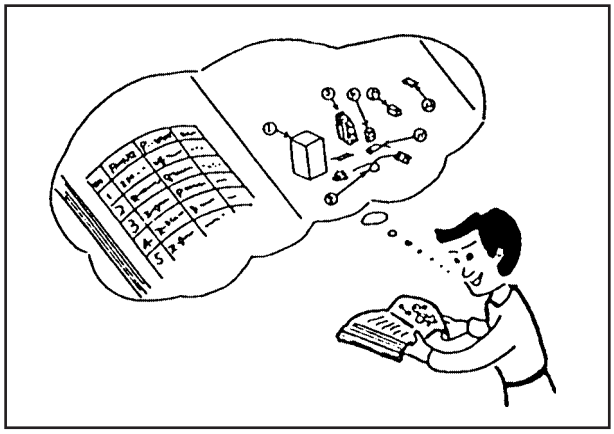

3. After completion of repairs, the initial state should be restored.

4. Lead wires should be connected and laid as in the initial state.

5. Modification of the unit by user himself should absolutely be prohibited.

6. Tools and measuring instruments for use in repairs or inspection should be accurately calibrated in advance.

7. In installing the unit having been repaired, be careful to prevent the occurence of any accident such as electrical shock, leak of current, or bodily injury due to the drop of any part.

8. To check the insulation of the unit, measure the insulation resistance between the power cord plug and grounding terminal of the unit. The insulation resistance should be 1MΩ or more as measured by a 500V DC megger.

9. The initial location of installation such as window, floor or the other should be checked for being and safe enough to support the repaired unit again.
   If it is found not so strong and safe, the unit should be installed at the initial location reinforced or at a new location.

10. Any inflammable thing should never be placed about the location of installation.

11. Check the grounding to see whether it is proper or not, and if it is found improper, connect the grounding terminal to the earth.

WORKING STANDARDS FOR PREVENTING BREAKAGE OF SEMICONDUCTORS

1. Scope
   The standards provide for items to be generally observed in carrying and handling semiconductors in relative manufacturers during maintenance and handling thereof. (They apply the same to handling of abnormal goods such as rejected goods being returned).

2. Object parts

   (1) Micro computer
   (2) Integrated circuits (IC)
   (3) Field-effect transistors (FET)
   (4) P.C. boards or the like on which the parts mentioned in (1) and (2) of this paragraph are equipped.

3. Items to be observed in handling

   (1) Use a conductive container for carrying and storing of parts. (Even rejected goods should be handled in the same way).

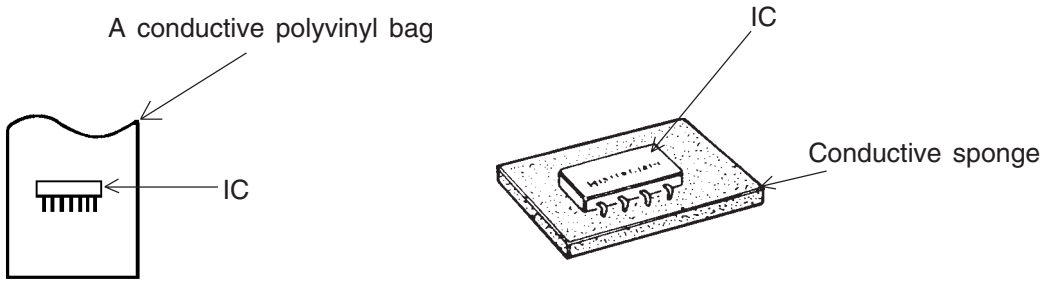

Fig. 1 Conductive Container

   (2) When any part is handled uncovered (in counting, packing and the like), the handling person must always use himself as a body earth. (Make yourself a body earth by passing one M ohm earth resistance through a ring or bracelet).

   (3) Be careful not to touch the parts with your clothing when you hold a part even if a body earth is being taken.

   (4) Be sure to place a part on a metal plate with grounding.

   (5) Be careful not to fail to turn off power when you repair the printed circuit board. At the same time, try to repair the printed circuit board on a grounded metal plate.

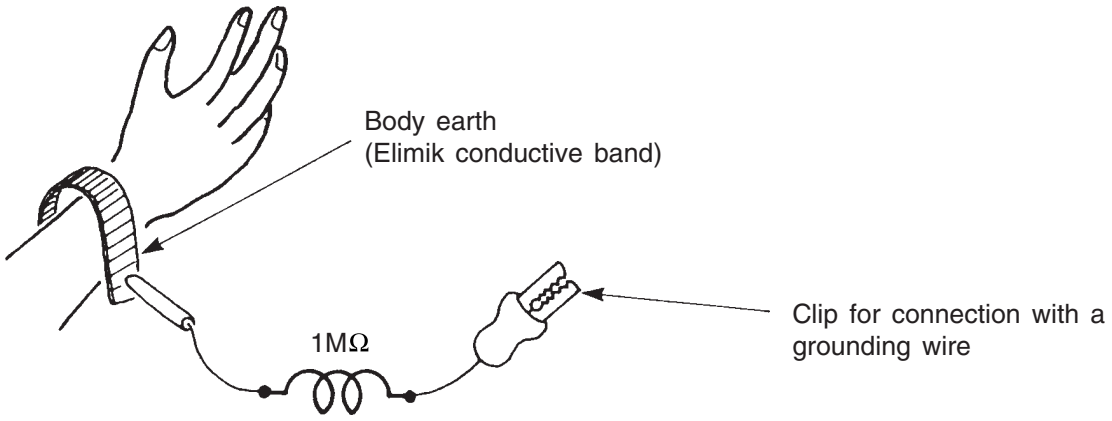

Fig. 2 Body Earth

(6)Use a three wire type soldering iron including a grounding wire.

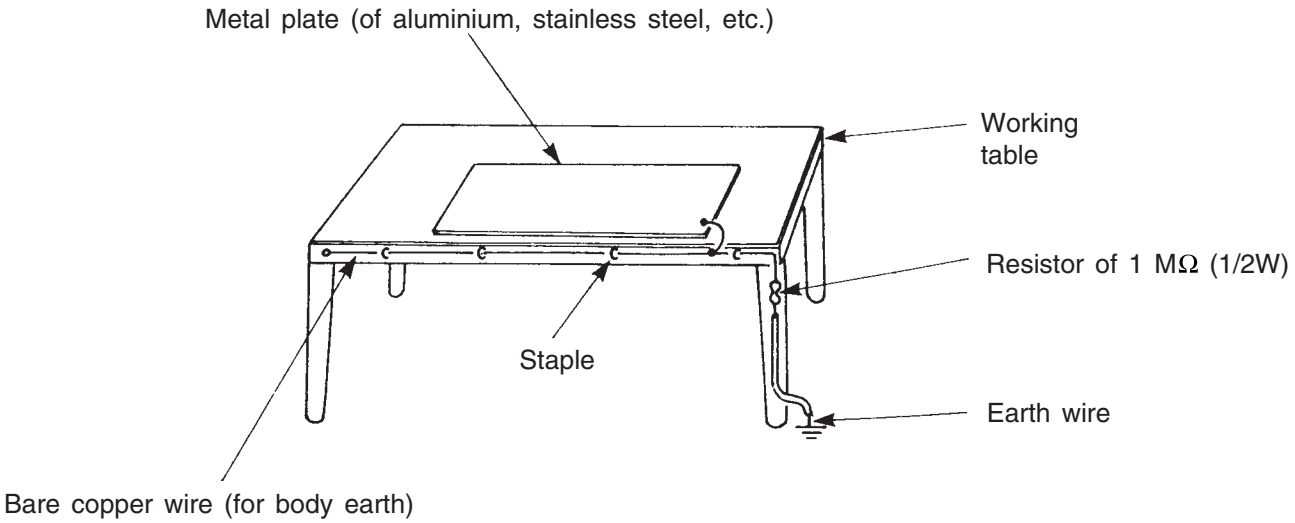

Fig. 3 Grounding of the working table

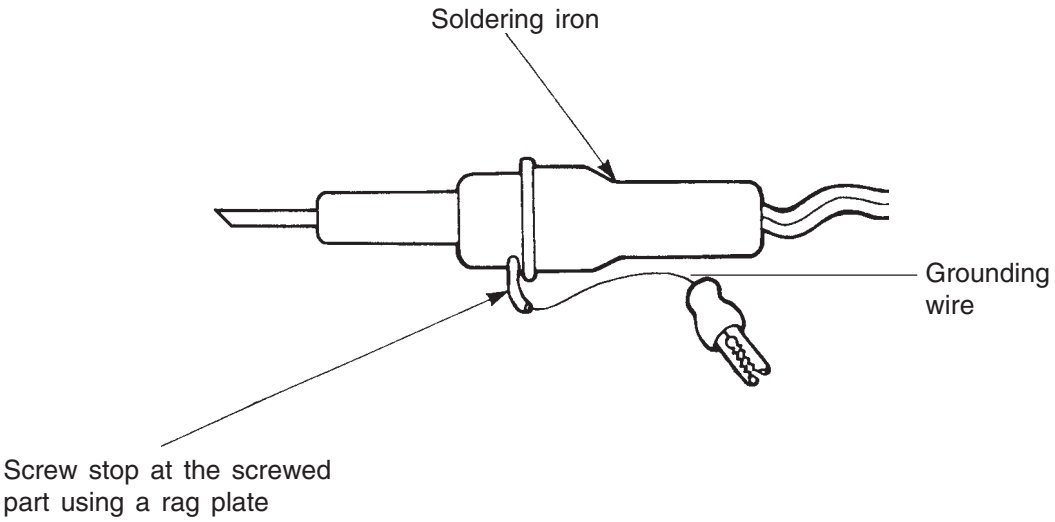

Fig. 4 Grounding a soldering iron

Use a high insulation mode (100V, 10MΩ or higher) when ordinary iron is to be used.

(7) In checking circuits for maintenance, inspection or some others, be careful not to have the test probes of the measuring instrument shortcircuit a load circuit or the like.

⚠ CAUTION

1. In quiet operation or stopping the running, slight flowing noise of refrigerant in the refrigerating cycle is heard occasionally, but this noise is not abnormal for the operation.

2. When it thunders near by, it is recommend to stop the operation and to disconnect the power cord plug from the power outlet for safety.

3. The room air conditioner does not start automatically after recovery of the electric power failure for preventing fuse blowing. Re-press START/STOP button after 3 minutes from when unit stopped.

4. If the room air conditioner is stopped by adjusting thermostat, or missoperation, and re-start in a moment, there is occasion that the cooling and heating operation does not start for 3 minutes, it is not abnormal and this is the result of the operation of IC delay circuit. This IC delay circuit ensures that there is no danger of blowing fuse or damaging parts even if operation is restarted accidentally.

5. This room air conditioner should not be used at the cooling operation when the outside temperature is below -10°C (14°F).

6. This room air conditioner (the reverse cycle) should not be used when the outside temperature is below –15°C (5°F).
   If the reverse cycle is used under this condition, the outside heat exchanger is frosted and efficiency falls.

7. When the outside heat exchanger is frosted, the frost is melted by operating the hot gas system, it is not trouble that at this time fan stops and the vapour may rise from the outside heat exchanger.

SPECIFICATIONS

MODEL		RAS-14EH1	RAC-14EH1
FAN MOTOR		PWM DC35V	40 W
FAN MOTOR CAPACITOR		NO	NO
FAN MOTOR PROTECTOR		NO	NO
COMPRESSOR		–	ASC092CD-A8JK
COMPRESSOR MOTOR CAPACITOR		NO	NO
OVERLOAD PROTECTOR		NO	YES
OVERHEAT PROTECTOR		NO	YES
FUSE (for MICROPROCESSOR)		NO	3.0A
POWER RELAY		NO	G4A
POWER SWITCH		YES	NO
TEMPORARY SWITCH		YES	NO
SERVICE SWITCH		NO	YES
TRANSFORMER		NO	NO
VARISTOR		NO	450NR
NOISE SUPPRESSOR		NO	YES
THERMOSTAT		YES(IC)	YES(IC)
REMOTE CONTROL SWITCH (LIQUID CRYSTAL)		YES	NO
REFRIGERANT CHARGING VOLUME (Refrigerant 410A)	UNIT	----------	870g
	PIPES (MAX. 20m)	WITHOUT REFRIGERANT BECAUSE COUPLING IS FLARE TYPE.	

SAFETY PRECAUTION

- Please read the "Safety Precaution" carefully before operating the unit to ensure correct usage of the unit.
- Pay special attention to signs of " ⚠ **Warning**" and "⚠ **Caution**". The "Warning" section contains matters which, if not observed strictly, may cause death or serious injury. The "Caution" section contains matters which may result in serious consequences if not observed properly. Please observe all instructions strictly to ensure safety.
- The signs indicate the following meanings. (The following are examples of signs.)

⃠ This sign in the figure indicates prohibition.	❗ Indicates the instructions that must be followed.

- Please keep this manual after reading.

PRECAUTIONS DURING INSTALLATION

WARNING	• Do not reconstruct the unit. Water leakage, fault, short circuit or fire may occur if you reconstruct the unit by yourself.	PROHIBITION
	• Please ask your sales agent or qualified technician for the installation of your unit. Water leakage, short circuit or fire may occur if you install the unit by yourself.	
	• Please use earth line. Do not place the earth line near water or gas pipes, lightning-conductor, or the earth line of telephone. Improper installation of earth line may cause electric shock.	CONNECT EARTH LINE
	• Be sure to use the specified piping set for R410A. Otherwise, this may result in broken copper pipes or faults.	
CAUTION	• A circuit breaker should be installed depending on the mounting site of the unit. Without a circuit breaker, the danger of electric shock exists.	
	• Do not install the unit near a location where there is flammable gas. The outdoor unit may catch fire if flammable gas leaks around it. Piping shall be suitable supported with a maximum spacing of 1m between the supports.	PROHIBITION
	• Please ensure smooth flow of water when installing the drain hose. If any failure is found in the drain path, water drops from the indoor and outdoor units, causing wet household effects.	
	• Make sure that a single phase 230V power source is used. The use of other power sources may cause electrical components to overheat and lead to fire.	PROHIBITION

PRECAUTIONS DURING SHIFTING OR MAINTENANCE

WARNING	• Should abnormal situation arise (like burning smell), please stop operating the unit and remove plug from the socket or turn off the circuit breaker. Contact your agent. Fault, short circuit or fire may occur if you continue to operate the unit under abnormal situation.	"OFF"
	• Please contact your agent for maintenance. Improper self maintenance may cause electric shock and fire.	
	• Please contact your agent if you need to remove and reinstall the unit. Electric shock or fire may occur if you remove and reinstall the unit yourself improperly.	
	• Avoid an extended period of direct air flow for your health.	PROHIBITION
	• Do not connect the power calbe with an extension cable or do not plug too many leads of the other electric appliance into the socket where this cable is plugged. In addition, wire the cable with some allowances to prevent the cable from stretching. Not doing so will cause an electrical shock, heat generation or fire.	PROHIBITION
	• Do not bundle the power cable, pull it, put something on it, heat it, process it, or put it between things. Breakage of the power cable may result. Use of a damaged cable may cause an electrical shock or a fire.	PROHIBITION
	PROHIBITION • Do not put objects like thin rods into the panel of blower and suction side because the high-speed fan inside may cause danger.	

PRECAUTIONS DURING OPERATION

WARNING	• Do not use any conductor as fuse wire, this could cause fatal accident.	PROHIBITION
	"OFF" • During thunder storm, disconnect the plug top or turn off the circuit breaker.	
	• Spray cans and other combustibles should not be located within a meter of the air outlets of both indoor and outdoor units. As a spray can's internal pressure can be increased by hot air, a rupture may result.	PROHIBITION
CAUTION	• The product shall be operated under the manufacturer specification and not for any other intended use.	PROHIBITION
	DON'T WET • Do not attempt to operate the unit with wet hands, this could cause fatal accident.	
	• When operating the unit with burning equipments, regularly ventilate the room to avoid oxygen insufficiency.	STRICTLY OBSERVE PRECAUTIONS
	PROHIBITION • Do not direct the cool air coming out from the air-conditioner panel to face household heating apparatus as this may affect the working of apparatus such as the electric kettle, oven etc.	
	• Please ensure that outdoor mounting frame is always stable, firm and without defect. If not, the outdoor unit may collapse and cause danger.	PROHIBITION
	PROHIBITION • Do not wash the unit with water or place a water container such as a vase on the indoor unit. Electrical leakage could be present and cause electric shock.	
	• Do not place plants or animals directly under the air flow as it is bad for the plants or animals.	PROHIBITION
	PROHIBITION • Do not climb on the outdoor unit or put objects on it.	
	• When operating the unit with the door and windows opened, (the room humidity is always above 80%) and with the air deflector facing down or moving automatically for a long period of time, water will condense on the air deflector and drips down occasionally. This will wet your furniture. Therefore, do not operate under such condition for a long time.	PROHIBITION
	PROHIBITION • If the amount of heat in the room is above the cooling or heating capability of the unit (for example: more people entering the room, using heating equipments and etc.), the preset room temperature cannot be achieved.	
	• This appliance especially indoor unit cleaning must be performed by authorized personnel only. Consult your sales agent. Using a commercially available detergent or similar can damage the plastic parts or clog the drain pipe, causing water to drip with potential electric shock hazard.	PROHIBITION
	DON'T TOUCH • Do not touch the air outlet, bottom surface and aluminum fin of the outdoor unit. You may get hurt.	
	• Do not touch the refrigerant pipe and connecting valve. Burns may result.	DON'T TOUCH
	• This appliance is not intended for use by young children or infirm persons unless they have been adequately supervised by a responsible person to ensure that they can use this appliance safely. • Young children should be supervised to ensure that they do not play with the appliance.	

INDOOR UNIT

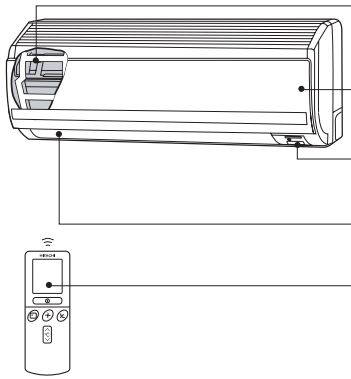

Air filter
To prevent dust from coming into the indoor unit.
(Refer page 16)

Front panel

Indoor unit indicators
Light indicator showing the operating condition.
(Refer page 5)

Horizontal deflector Vertical deflector (Air Outlet)
(Refer page 15)

Remote controller
Send out operation signal to the indoor unit. So as to operate the whole unit.
(Refer page 6)

OUTDOOR UNIT

RAC-10EH1

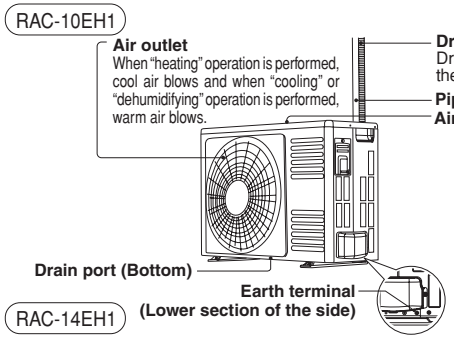

Air outlet
When "heating" operation is performed, cool air blows and when "cooling" or "dehumidifying" operation is performed, warm air blows.

Drain hose
Drains the dehumidified water from the indoor unit to the outdoor during "cooling" or "dehumidifying" operation.

Piping and Wiring

Air inlets (Rear and left sides)

Drain port (Bottom)

Earth terminal (Lower section of the side)

RAC-14EH1

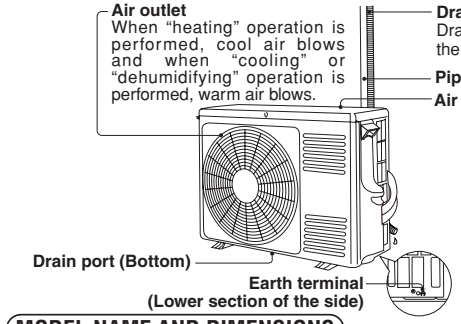

Air outlet
When "heating" operation is performed, cool air blows and when "cooling" or "dehumidifying" operation is performed, warm air blows.

Drain hose
Drains the dehumidified water from the indoor unit to the outdoor during "cooling" or "dehumidifying" operation.

Piping and Wiring

Air inlets (Rear and left sides)

Drain port (Bottom)

Earth terminal (Lower section of the side)

About the outdoor unit:
- When "Stop" is selected during operation of the indoor unit, the fan of the outdoor unit continues turning for 10 to 60 seconds to cool the electric parts down.
- In heating operation, condensate or water due to defrosting will flow.
  Do not cover the drain port of the outdoor unit because such water may freeze in the chilly area.
- When the outdoor unit is hung on the ceiling, install the bush and drain pipe on the drain port and drain water.

MODEL NAME AND DIMENSIONS

MODEL	WIDTH (mm)	HEIGHT (mm)	DEPTH (mm)
RAS-10EH1, RAS-14EH1	780	280	220
RAC-10EH1	700	505	258
RAC-14EH1	750	548	288

INDOOR UNIT INDICATIONS

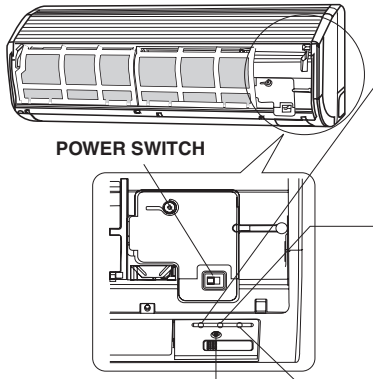

POWER SWITCH

FILTER LAMP (Green)
When the device is operated for a total of about 200 hours, the FILTER lamp lights indicates that it is time to clean the filter.The lamp goes out when the "(AUTO SWING)" button is pressed while the operation is stopped.

OPERATION LAMP (Yellow)
This lamp lights during operation.
The OPERATION LAMP flashes in the following cases during heating.
(1) During preheating
For about 2-3 minutes after starting up.
(2) During defrosting
Defrosting will be performed about once an hour when frost forms on the heat exchanger of the outdoor unit, for 5-10 minutes each time.

TIMER LAMP (Orange)
This lamp lights when the timer is working.

TEMPORARY SWITCH
- Use this switch to start and stop when the remote controller does not work.
- This temporary operation will be at the most recent setting made. (The unit will immediately go into automatic operation once power is switched on.)

⚠ CAUTION

Turn off the circuit breaker or pull out the power plug if the unit is not be operated for a long period.

☆ If the power stays on and the unit is not operated, power is slightly consumed in the control circuit. The power is saved by turning off the power switch (or the circuit breaker when the power is supplied from the outdoor unit).

■ **Attaching the air cleansing and deodorizing filters (Accessories) to the filter frame.**
- Attach the air cleansing and deodorizing filters to the frame by gently compress its both sides and release after insertion into filter frame.
- The cooling capacity is slightly weakened and the cooling speed becomes slower when the air cleansing and deodorizing filters are used.
- Air cleansing and deodorizing filters can be used for about 2 years. When you want to renew it, please ask your sales agent.

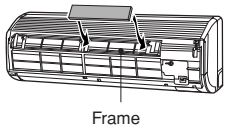

Frame

NAMES AND FUNCTIONS OF EACH PART

REMOTE CONTROLLER

- This controls the operation of the indoor unit.
  The range of control is about 7 meters. If indoor lighting is controlled electronically, the range of control may be shorter, in some cases, the control signal may not be received.
  This unit can be fixed on a wall using the fixture provided. Before fixing it, make sure the indoor unit can be controlled from the remote controller.
- Handle the remote controller with care.
  Dropping it or getting it wet may compromise its signal transmission capability.
- After new batteries are inserted into the remote controller, the unit will initially require approximately 10 seconds to respond to commands and operate.

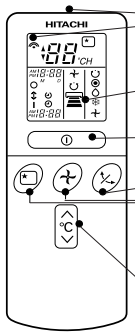

- **Signal emitting window/transmission sign**
  Point this window toward the indoor unit when controlling it.
  The transmission sign blinks when a signal is sent.
- **Display**
  This indicates the room temperature selected, current time, timer status, function and intensity of circulation selected.
- **START/STOP button**
  Press this button to start operation. Press it again to stop operation.
- **AUTO SWING button**
  Controls the angle of the horizontal air deflector.
- **FAN SPEED selector**
  This determines the fan speed. Every time you press this button, the intensity of circulation will change from (AUTO) to (HI) to (MED) to (LOW). (This button allows selecting the optimal or preferred fan speed for each operation mode.)
- **SLEEP button**
  Use this button to set the sleep timer.
- **TEMPERATURE buttons**
  Use these buttons to raise or lower the temperature setting. (Keep pressed, and the value will change more quickly.)

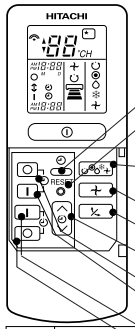

- **TIME button**
  Use this button to set and check the time and date.
- **RESET button**
  Press this button after the batteries are replaced or when some irregular operation is found.
- **FUNCTION selector**
  Use this button to select the operating mode. Every time you press it, the mode will change from (AUTO) to (HEAT) to (DEHUMIDIFY) to (COOL) and to (FAN) cyclically.
- **FAN SPEED selector**
- **AUTO SWING button**
- **TIMER control**
  Use these buttons to set the timer.
- **OFF-TIMER button** Select the turn OFF time.
- **ON-TIMER button** Select the turn ON time.
- **RESERVE button** Time setting reservation.
- **CANCEL button** Cancel time reservation.

	AUTO
	HEAT
	DEHUMIDIFY
	COOL
	FAN
	FAN SPEED LOW MED HI
	SLEEPING
	STOP (CANCEL)
	START (RESERVE)
	START/STOP
	TIME
	TIMER SET
	TIMER SELECTOR ON TIMER OFF TIMER
	AUTO SWING

Precautions for Use

- Do not put the remote controller in the following places.
  - In direct sunlight
  - In the vicinity of a heater.
- Handle the remote controller carefully. Do not drop it on the floor, and protect it from water.
- Once the outdoor unit stops, it will not restart for about 3 minutes (unless you turn the power switch off and on or unplug the power cord and plug it in again).
  This is to protect the device and does not indicate a failure.
- If you press the FUNCTION selector button during operation, the device may stop for about 3 minutes for protection.

VARIOUS FUNCTIONS

■ Auto Restart Control

- If there is a power failure, operation will be automatically restarted when the power is resumed with previous operation mode and airflow direction.
  (As the operation is not stopped by remote controller.)
- If you intend not to continue the operation when the power is resumed, switch off the power supply. When you switch on the circuit breaker, the operation will be automatically restarted with previous operation mode and airflow direction.
  Note: 1. If you do not require Auto Restart Control, please consult your sales agent.
  2. Auto Restart Control is not available when Timer or Sleep Timer mode is set.

AUTOMATIC OPERATION

The device will automatically determine the mode of operation, HEAT or COOL depending on the initial room temperature. The selected mode of operation will change when the room temperature varies.

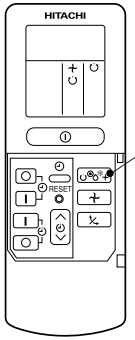

1

Press the FUNCTION selector so that the display indicates the (AUTO) mode of operation.

- When AUTO has been selected, the device will automatically determine the mode of operation, HEAT or COOL depending on the current room temperature.
- When AUTO is first selected, the device will determine the current room temperature and select the proper operation mode accordingly.
- When the air conditioner has adjusted the room's temperature to the near preset temperature, it will begin to monitor operation. If the room temperature subsequently changes, the air conditioner will once again select the appropriate operation (heating or cooling) to adjust the temperature to the preset temperature. The monitoring operation range is ± 3°C relative to the preset temperature.
- If the mode automatically selected by the unit is not satisfactory, manually change the mode setting (heat, dehumidify, cool or fan).

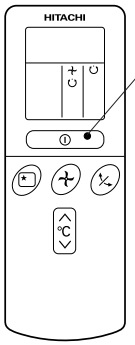

START STOP

Press the (START/STOP) button.
Operation starts with a beep.
Press the button again to stop operation.

■ As the settings are stored in memory in the remote controller, you only have to press the (START/STOP) button next time.

You can raise or lower the temperature setting as necessary by maximum of 3°C.

Press the temperature button and the temperature setting will change by 1°C each time.

- The preset temperature and the actual room temperature may vary somewhat depending on conditions.

Press the (FAN SPEED) button, AUTO and LOW is available.

HEATING OPERATION

- Use the device for heating when the outdoor temperature is under 21°C.
  When it is too warm (over 21°C), the heating function may not work in order to protect the device.
- In order to keep reliability of the device, please use this device above -15°C of the outdoor temperature.

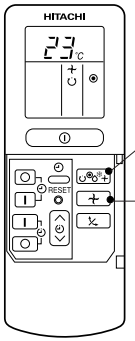

1 Press the FUNCTION selector so that the display indicates ◉ (HEAT).

2 Set the desired FAN SPEED with the ✢ (FAN SPEED) button (the display indicates the setting).

(AUTO)	:	The fan speed changes automatically according to the temperature of the air which blows out.
(HI)	:	Economical as the room will become warm quickly. But you may feel a chill at the beginning.
(MED)	:	Quiet.
(LOW)	:	More quiet.

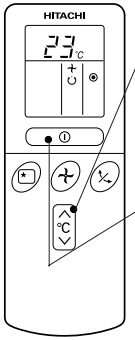

3 Set the desired room temperature with the TEMPERATURE buttons (the display indicates the setting).

The temperature setting and the actual room temperature may vary somewhat depending on conditions.

START STOP Press the ⏻ (START/STOP) button. Heating operation starts with a beep. Press the button again to stop operation.

■ As the settings are stored in memory in the remote controller, you only have to press the ⏻ (START/STOP) button next time.

■ Defrosting

Defrosting will be performed about once an hour when frost forms on the heat exchange of the outdoor unit, for 5~10 minutes each time.

During defrosting operation, the operation lamp blinks in cycle of 3 seconds on and 0.5 second off.

The maximum time for defrosting is 20 minutes.

(If the piping length used is longer than usual, frost will likely to form.)

DEHUMIDIFYING OPERATION

Use the device for dehumidifying when the room temperature is over 16°C.
When it is under 15°C, the dehumidifying function will not work.

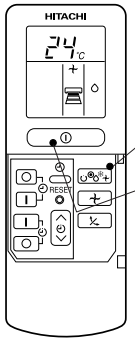

1 Press the FUNCTION selector so that the display indicates ○ (DEHUMIDIFY).
The FAN SPEED is set at LOW automatically.
The FAN SPEED button does not work.

START STOP Press the ⏻ (START/STOP) button.

■ When you want to change the operation mode, please use the FUNCTION selector.
■ Set the desired temperature is available.
■ You also can use the FUNCTION selector to select this operation.

■ Dehumidifying Function

- Dehumidifying takes place with a target temperature which is slightly lower than the room temperature setting. (However, target temperature is 16°C for a temperature setting of 16°C.)
  If the room temperature becomes lower than the target value, operation stops. If the room temperature becomes higher than the target value, operation restarts.
- The preset room temperature may not be reached depending on the number of people present in the room conditions.

COOLING OPERATION

Use the device for cooling when the outdoor temperature is -10 to 42°C.
If humidity is very high (over 80%) indoors, some dew may form on the air outlet grille of the indoor unit.

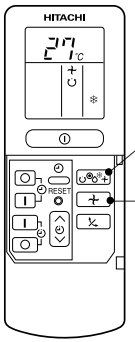

1 Press the FUNCTION selector so that the display indicates ❄ (COOL).

2 Set the desired FAN SPEED with the ✢ (FAN SPEED) button (the display indicates the setting).

- (AUTO) : The FAN SPEED is HI at first and varies to MED automatically when the preset temperature has been reached.
- (HI) : Economical as the room will become cool quickly.
- (MED) : Quiet.
- (LOW) : More quiet.

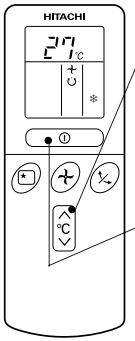

3 Set the desired room temperature with the TEMPERATURE buttons (the display indicates the setting).

The temperature setting and the actual room temperature may vary somewhat depending on conditions.

START STOP Press the ⏻ (START/STOP) button. Cooling operation starts with a beep. Press the button again to stop operation. The cooling function does not start if the temperature setting is higher than the current room temperature (even though the ⏻ (OPERATION) lamp lights).
The cooling function will start as soon as you set the temperature below the current room temperature.

■ As the settings are stored in memory in the remote controller, you only have to press the ⏻ (START/STOP) button next time.

FAN OPERATION

You can use the device simply as an air circulator. Use this function to dry the interior of the indoor unit at the end of summer.

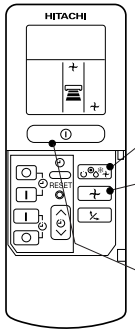

1 Press the FUNCTION selector so that the display indicates ✢ (FAN).

2 Press the ✢ (FAN SPEED) button.

- (HI) : The strongest air blow.
- (MED) : Quiet.
- (LOW) : More quiet.

START STOP Press the ⏻ (START/STOP) button. Fan operation starts with a beep.
Press the button again to stop operation.

FAN SPEED (AUTO) … When the AUTO fan speed mode is set in the cooling/heating operation:

For the heating operation	• The fan speed will automatically change according to the temperature of discharged air. • As room temperature reaches the preset temperature, a very light breeze will blow.
For the cooling operation	• Operation starts in the “HI” mode to reach the preset temperature. • As room temperature approaches the preset temperature, fan speed automatically switches to “LOW”.

HOW TO SET THE TIMER

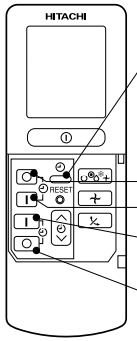

TIME, DAY, MONTH (current time, day, month)

OFF TIMER

ON TIMER

RESERVE

CANCEL

Time, Day, Month

After you change the batteries;

1 Set the current month and day with the TIMER control button.

OFF-Timer

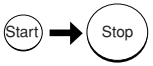

You can set the device to turn off at the present time.

1 Press the ○ (OFF-TIMER) button. The ○ (OFF) mark blinks on the display.

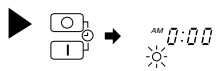

ON-Timer

The device will turn on at the designated times.

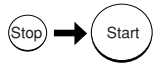

1 Press the I (ON-TIMER) button. The I (ON) mark blinks on the display.

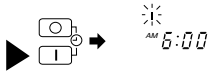

ON/OFF-Timer

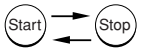

- The device will turn on (off) and off (on) at the designated times.
- The switching occurs first at the preset time that comes earlier.
- The arrow mark appearing on the display indicates the sequence of switching operations.

1 Press the ○ (OFF-TIMER) button so that the ○ (OFF) mark blinks.

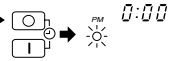

2 Set the turn-off time with the TIMER control button.
Press the I (RESERVE) button.

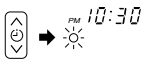

3 Press the I (ON-TIMER) button so that the ○ (OFF) mark lights and the I (ON) mark blinks.

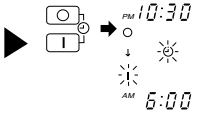

How to Cancel Reservation

Point the signal window of the remote controller toward the indoor unit, and press the ○ (CANCEL) button.
The ⏲ (RESERVED) sign goes out with a beep and the ⏲ (TIMER) lamp turns off on the indoor unit.

NOTE
You can set only one of the OFF-timer, ON-timer and ON/OFF-timer.

2 Set the ⏲ (TIME) button.

3 Set the current time with the TIMER control button.

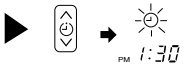

Example: The current time is 1:30p.m.

4 Press the ⏲ (TIME) button again. The time indication starts lighting instead of flashing.

- The time indication will disappear automatically in 10 seconds.
- To check the current time setting, press the ⏲ (TIME) button twice.
  The setting of the current time is now complete.

2 Set the turn-off time with the TIMER control button.

3 Point the signal window of the remote controller toward the indoor unit, and press the I (RESERVE) button.
The ○ (OFF) mark starts lighting instead of flashing and the ⏲ (RESERVED) sign lights. A beep occurs and the ⏲ (TIMER) lamp lights on the indoor unit.

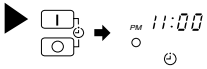

Example: The device will turn off at 11:00p.m.
The setting of turn-off time is now complete.

2 Set the turn-on time with the TIMER control button.

3 Point the signal window of the remote controller toward the indoor unit, and press the I (RESERVE) button.
The I (ON) mark starts lighting instead of flashing and the ⏲ (RESERVED) sign lights. A beep occurs and the ⏲ (TIMER) lamp lights on the indoor unit.

Example:
The device will turn on early so that the preset temperature be almost reached at 7:00 a.m.
The setting of the turn-on time is now complete.

4 Set the turn-on time with the TIMER control button.

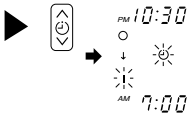

5 Point the signal window of the remote controller toward the indoor unit, and press the I (RESERVE) button.
The I (ON) mark starts lighting instead of flashing and the ⏲ (RESERVED) sign lights. A beep occurs and the ⏲ (TIMER) lamp lights on the indoor unit.

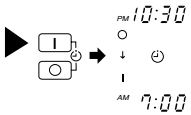

Example:
For heating, the device will turn off at 10:30 p.m., and then turn on early so that the preset temperature be almost reached at 7:00 a.m.; for cooling and dehumidifying, it will simply turned on at 7:00 a.m. The settings of the turn on/off times are now complete.

- The timer may be used in three ways: off-timer, on-timer and ON/OFF (OFF/ON)-timer. Set the current time at first because it serves as a reference.
- As the time settings are stored in memory in the remote controller, you only have to press the I (RESERVE) button is order to use the same settings next time.

HOW TO SET THE SLEEP TIMER

Set the current time at first if it is not set before (see the pages for setting the current time). Press the (SLEEP) button and the display changes as shown below.

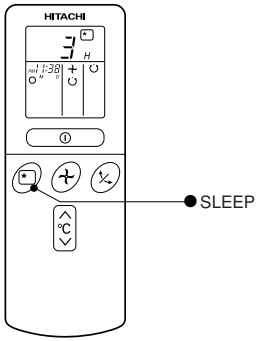

Mode	Indication
Sleep Timer	1 hour → 2 hours → 3 hours → 7 hours → Sleep timer off

Sleep Timer: The device will continue working for the desired number of hours and then turn off.
Point the signal window of the remote controller toward the indoor unit, and press the SLEEP button.
The timer information will be displayed on the remote controller. The TIMER lamp lights with a beep from the indoor unit. When the sleep timer has been set, the display indicates the turn-off time.

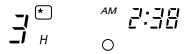

Example: If you set 3 hours sleep time at 11:38 p.m., the turn-off time is 2:38 a.m.

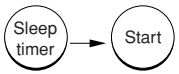

The device will be turned off by the sleep timer and turned on by on-timer.

1 Set the ON-timer.

2 Press the (SLEEP) button and set the sleep timer.

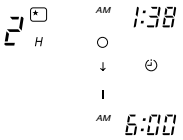

For heating:

In this case, the device will turn off in 2 hours (at 1:38 a.m.) and turn on early so that the preset temperature will be almost reached at 6:00 next morning.

How to Cancel Reservation

Point the signal window of the remote controller toward the indoor unit, and press the (CANCEL) button.
The (RESERVED) sign goes out with a beep and the (TIMER) lamp turns off on the indoor unit.

NOTE

If you set the sleep timer when the off-time or on/off-timer has been set earlier, the sleep timer becomes effective instead of the off - or on/off-timer set earlier.

ADJUSTING THE AIR DEFLECTORS

1 Adjustment of the conditioned air in the upward and downward directions.
The horizontal air deflector is automatically set to the proper angle suitable for each operation. The deflector can be swung up and down continuously and also set to the desired angle using the " (AUTO SWING)" button.

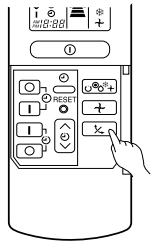

- If the " (AUTO SWING)" button is pressed once, the horizontal air deflector swings up and down. If the button is pressed again, the deflector stops in its current position. Several seconds (about 6 seconds) may be required before the deflector starts to move.
- Use the horizontal air deflector within the adjusting range shown in the right.
- When the operation is stopped, the horizontal air deflector moves and stops at the position where the air outlet closes.

CAUTION

- In "Cooling" operation, do not keep the horizontal air deflector swinging for a long time. Some dew may form on the horizontal air deflector and dew may drop.

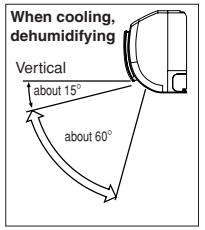

2 Adjustment of the conditioned air to the left and right.

Hold the vertical air deflector as shown in the figure and adjust the conditioned air to the left and right.

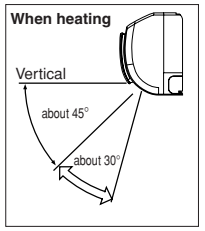

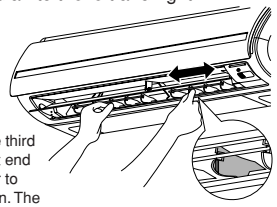

Left side: Hold the third blade from the left end of the air deflector to adjust the direction. The pull for the blade is marked.

Right side: Hold the third blade from the right end of the air deflector to adjust the direction. The pull for the blade is marked.

HOW TO EXCHANGE THE BATTERIES IN THE REMOTE CONTROLLER

1 Remove the cover as shown in the figure and take out the old batteries.

2 Install the new batteries.
The direction of the batteries should match the marks in the case.

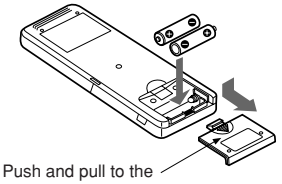

Push and pull to the direction of arrow.

CAUTION

1. Do not use new and old batteries, or different kinds of batteries together.
2. Take out the batteries when you do not use the remote controller for 2 or 3 months.

MAINTENANCE

⚠ CAUTION

Cleaning and maintenance must be carried out only by qualified service personal. Before cleaning, stop operation and switch off the power supply.

1. AIR FILTER

When the filter indicator lamp comes on, be sure to clean the filter. By doing so, the power rates are saved. In case the air filter is full of dust, the air flow will decrease and the cooling capacity will be reduced. Further, noise may occur. Be sure to clean the filter following the procedure below.

PROCEDURE

1. Open the front panel carefully and remove the filter.

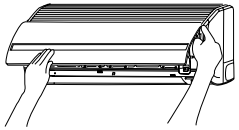

2. Vacuum dust from the air filter using vacuum cleaner. If there is too much dust, wash the filter with a detergent and rinse it thoroughly. After that, dry it in the shade.

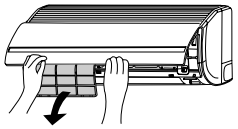

3. • Set the filter with “FRONT” mark facing front, and slot them into the original state.
   • After attaching the filters, push the front panel at three arrow portions as shown in figure and close it.

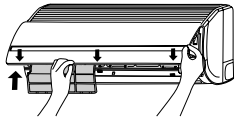

⚠ CAUTION

- Do not wash with hot water at more than 40°C. The filter may shrink.
- When washing it, shake off moisture completely and dry it in the shade; do not expose it directly to the sun. The filter may shrink.
- Don't operate the unit without filter. Fault may occur if you continue.

2. CLEANING OF FRONT PANEL

- Remove the front panel and wash with clean water. Wash it with a soft sponge. After using neutral detergent, wash thoroughly with clean water.
- When front panel is not removed, wipe it with a soft dry cloth. Wipe the remote controller thoroughly with a soft dry cloth.
- Wipe the water thoroughly. If water remains at indicators or signal receiver of indoor unit, it causes trouble.

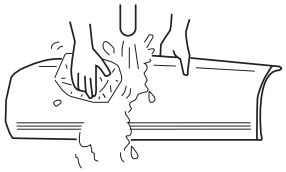

Method of removing the front panel.
Be sure to hold the front panel with both hands to detach and attach it.

Removing the Front Panel

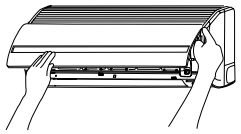

- When the front panel is fully opened with both hands, push the right arm to the inside to release it, and while closing the front panel slightly, put it out forward.

Attaching the Front Panel

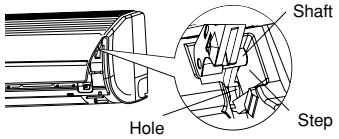

- Move the shafts of the left and right arms into the **steps** in the unit and securely insert them into the holes.

⚠ CAUTION

- Do not splash or direct water to the body of the unit when cleaning it as this may cause short circuit.
- Never use hot water (above 40°C), benzine, gasoline, acid, thinner or a brush, because they will damage the plastic surface and the coating.

3. MAINTENANCE AT BEGINNING OF LONG OFF PERIOD

- Run the unit by setting the operation mode to ✢ (FAN) and the fan speed to HI for about half a day on a fine day, and dry the whole of the unit.
- Switch off the power plug or turn off the circuit breaker.

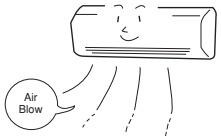

INFORMATION

CAPABILITIES

Heating Capability

- This room air conditioner utilizes a heat pump system that absorbs exterior heat and brings it into a room to be heated. As the ambient temperature gets lower, heating capability will also lower. In such a situation, the inverter work to increase compressor rpm to keep the unit's heating capability from decreasing. If the unit's heating performance is still unsatisfactory, other heating appliances should be used to augment this unit's performance.
- The air conditioner is designed to heat an entire room so that it may take some time before you feel warm. Timer operation is recommended for effective preheating ahead of the desired time.

CAUTION

Do not use a stove or any other hightemperature devices in proximity to the indoor unit.

PROHIBITION

Cooling and Dehumidifying Capabilities

- If the heat present in a room exceeds the unit's cooling capacity (for example, if there are many people in the room or other heating appliances are used), the preset room temperature may not be reached.

VARIOUS FUNCTIONS

- When fan speed, room temperature are set with the remote controller before starting manual operation and the buttons are released, the indication of settings will go off in 10 seconds and only the operation mode will be displayed.
- Pressing the button while the unit is in operation will let the protective circuit work so that the unit will not operate for approximately 3 minutes.
- During heating operation, the indoor unit's color indicator lamp may flash with no air emitted for a while.
- If you feel cold wind during heating operation with the (HI) fan speed or want to make the unit operation quieter after the room is heated, use of (AUTO) setting is recommended.
- With the (LOW) setting, the unit's cooling capability will lower slightly.
- With the (LOW) setting, the unit's heating capacity will vary with the operating conditions.

TIMER PROGRAMMING/SLEEP TIMER OPERATION

- When the timer has been programmed, the unit will not operate even if the set time is reached unless the unit receives a signal from the remote controller. Confirm that timer programming is complete (beep) and the TIMER lamp of the indoor unit lights.
- If the (SLEEP) button is pressed while the ON/OFF timer is programmed, the sleep timer takes priority.
- During sleep timer operation, the fan speed sets to (LOW) regardless of the preset speed. The remote controller display indication will remain unchanged even with the (LOW) setting.

REGULAR INSPECTION

PLEASE CHECK THE FOLLOWING POINTS EVERY EITHER HALF YEARLY OR YEARLY. CONTACT YOUR SALES AGENT SHOULD YOU NEED ANY HELP.

1		WARNING	**Check to see if the unit's earth line has been connected correctly.** If the earth line is disconnected or faulty, unit failure or electric shock hazard may result.
2		WARNING	**Check to see if the mounting frame has rusted excessively or if the outdoor unit has tilted or become unstable.** It could collapse or fall, causing injury.
3		WARNING	**Check to see if the power plug is securely inserted into the wall socket.** If the power plug is not inserted into the wall socket securely or becomes hot, an electric shock or fire may result. If dust or dirt is found on the power plug, clean the plug and insert it into the wall socket.

AFTER SALES SERVICE AND WARRANTY

WHEN ASKING FOR SERVICE, CHECK THE FOLLOWING POINTS.

CONDITION	CHECK THE FOLLOWING POINTS
If the remote controller is not transmitting a signal. (Remote controller display is dim or blank.)	• Do the batteries need replacement? • Is the polarity of the inserted batteries correct?
When it does not operate.	• Is the fuse all right? • Is the voltage extremely high or low? • Is the circuit breaker "ON"? • Is the power plug inserted? • Do you have any power cut?
When it does not cool well. When it does not heat well.	• Is the air filter blocked with dust? • Is the set temperature suitable? • Have horizontal air deflectors been adjusted to their correct positions according to the operation mode selected? • Are the air inlets or air outlets of indoor and outdoor units blocked? • Is the fan speed "LOW"?

■ The following phenomena do not indicate unit failure.

During heating, the operation indicator blinks and air blow stops	<Operation start> The unit is preparing to blow warm air. Please wait. <In operation> The outdoor unit is defrosting. Please wait.
Hissing or fizzy sounds	Refrigerant flow noise in the pipe or valve sound generated when flow rate is adjusted.
Squeaking noise	Noise generated when the unit expands or contracts due to temperature changes.
Rustling noise	Noise generated with the indoor unit fan's rpm changing such as operation start times.
Clicking noise	Noise of the motorized valve when the unit is switched on.

Perking noise	Noise of the ventilation fan sucking in air present in the drain hose and blowing out dehumidifying water that had accumulated in the condensed water collector. For details, consult your sales agent.
Changing operation noise	Operation noise changes due to power variations according to room temperature changes.
Mist emission	Mist is generated as the air within the room is suddenly cooled by conditioned air.
Steam emitted from the outdoor unit	Water generated during defrosting operation evaporates and steam is emitted.
Odors	Caused as the smells and particles of smoke, food, cosmetics, etc. present in room air become attached the unit and blown off into the room again.
The outdoor unit continues to operate even if operation is stopped.	Defrosting is underway (as the heating operation is stopped, the microcomputer checks frost accumulated in the outdoor unit and instructs the unit to perform automatic defrosting if necessary).
The OPERATION lamp is blinking.	Shows preheating or defrosting operation is underway. As the protective circuit or preheat sensor operates when unit operation is stopped during preheating and then restarted, or when operation mode is switched from cooling to heating, the lamp continues to blink.
Does not reach the temperature setting	Actual room temperature may deviate slightly from the remote controller's temperature setting depending on the number of people in the room, indoor or outdoor conditions.

- If the unit still fails to operate normally after performing the above inspections, turn the circuit breaker off, or pull the power plug out, and contact your sales agent immediately.

Contact your sales agent immediately if the following phenomena should occur:

- The circuit breaker switches off or the fuse blows frequently.
- The switch operation is not stable.
- Foreign matter or water accidentally enters the unit interior.
- The power cord gets excessively hot or its insulation is torn or stripped.
- TIMER lamp on the indoor unit display blinks.

(As the nature of the failure can be identified by the blinking cycle, check the blinking cycle before turning off the circuit breaker.)

Notes

- In quiet operation or stopping the running, the following phenomena may occasionally occur, but they are not abnormal for the operation.
  (1) Slight flowing noise of refrigerant in the refrigerating cycle.
  (2) Slight rubbing noise from the fan casing which is cooled and then gradually warmed as operation stops.
- The odor will possibly be emitted from the room air conditioner because the various odor, emitted by smoke, foodstuffs, cosmetics and so on, sticks to it. So please clean the air filter and the evaporator regularly to reduce the odor.

- Please contact your sales agent immediately if the air conditioner still fails to operate normally after the above inspections. Inform your agent of the model of your unit, production number, date of installation. Please also inform him regarding the fault.

Please note:
On switching on the equipment, particularly when the room light is dimmed, a slight brightness fluctuation may occur. This is of no consequence.
The conditions of the local Power Supply Companies are to be observed.

CONSTRUCTION AND DIMENSIONAL DIAGRAM

MODEL RAS-14EH1

INDOOR UNIT

Unit : mm

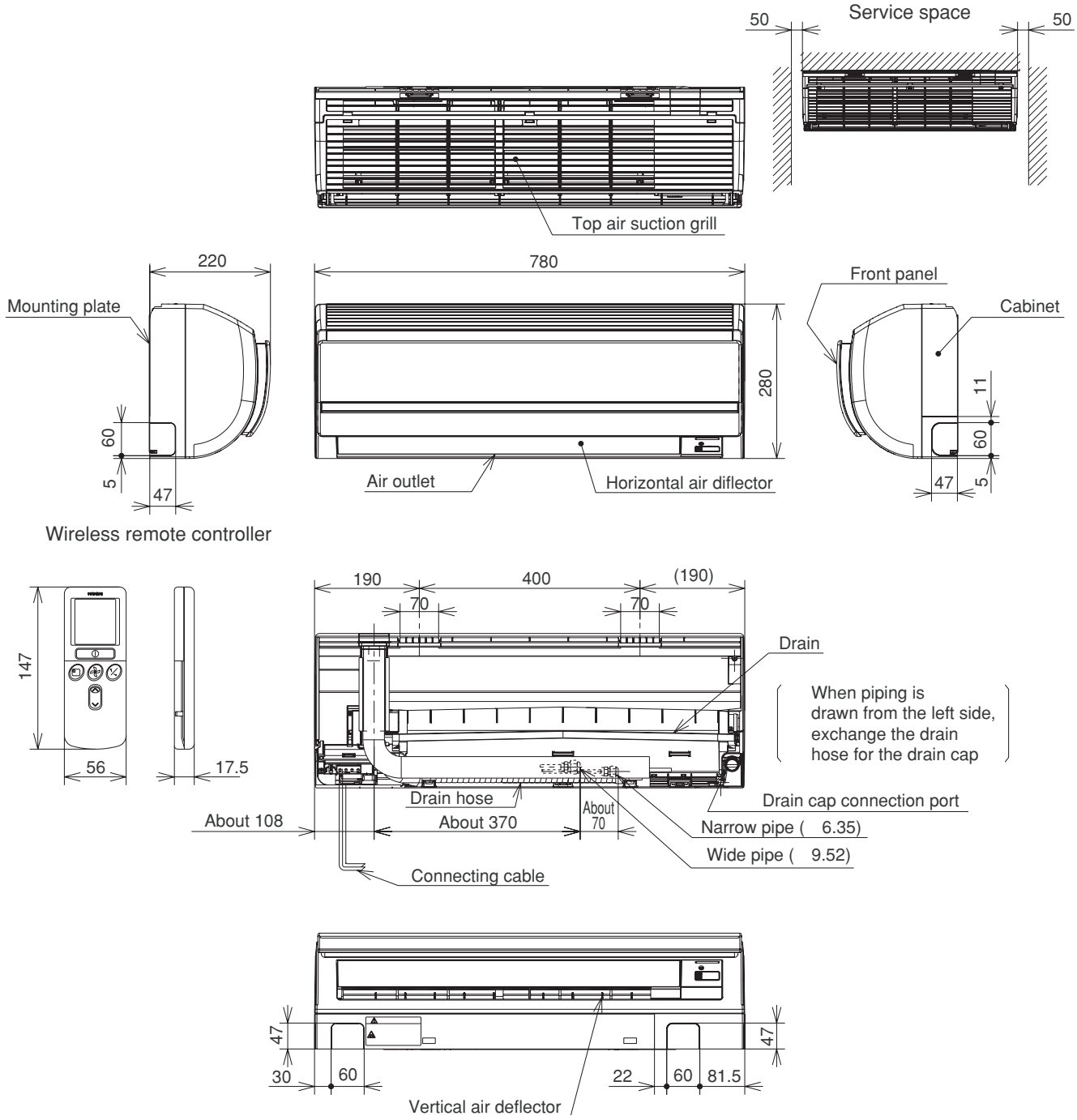

CONSTRUCTION AND DIMENSIONAL DIAGRAM

MODEL RAC-14EH1

OUTDOOR UNIT

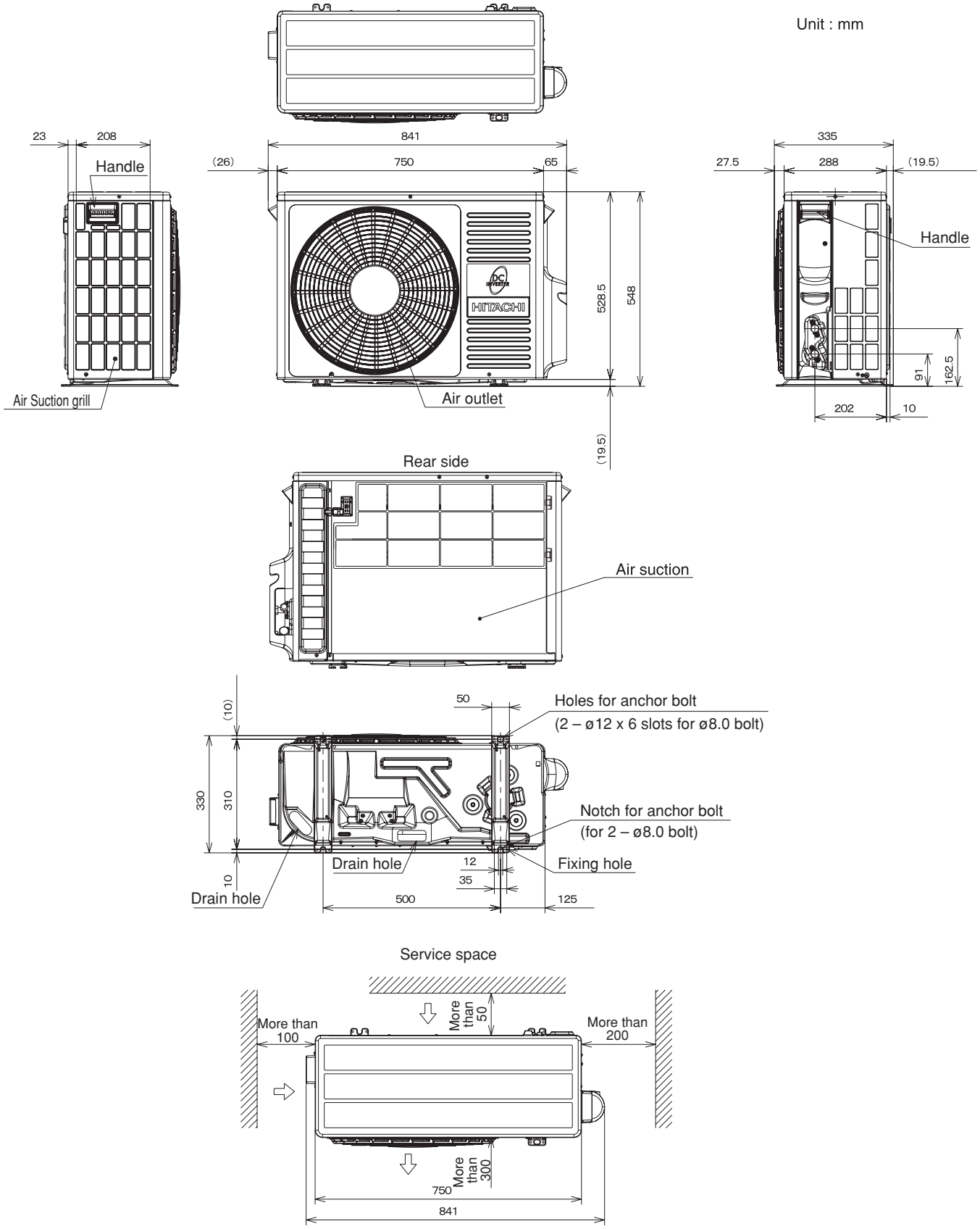

MAIN PARTS COMPONENT

THERMOSTAT

Thermostat Specifications

MODEL			RAS-14EH1	
THERMOSTAT MODEL			IC	
OPERATION MODE			COOL	HEAT
TEMPERATURE °C (°F)	INDICATION 16	ON	16.7 (62.1)	18.7 (65.7)
		OFF	16.0 (60.8)	19.3 (66.7)
	INDICATION 24	ON	24.7 (76.5)	26.7 (80.1)
		OFF	24.0 (75.2)	27.3 (81.1)
	INDICATION 32	ON	32.7 (90.9)	34.7 (94.5)
		OFF	32.0 (89.6)	35.3 (95.5)

FAN MOTOR

Fan Motor Specifications

MODEL	RAS-14EH1	RAC-14EH1
POWER SOURCE	DC 5V, 35V	DC 140 ~ 350V
OUTPUT	25W	40W
CONNECTION	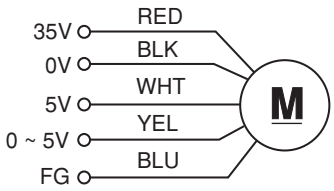 (Control circuit built in)	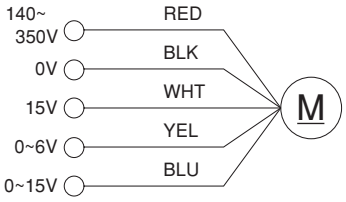

BLU : BLUE	YEL : YELLOW	BRN : BROWN	WHT : WHITE
GRY : GRAY	ORN : ORANGE	GRN : GREEN	RED : RED
BLK : BLACK	PNK : PINK	VIO : VIOLET	

MAIN ELECTRIC COMPONENTS FOR OUTDOOR UNIT

NAME	RATING	APPLICABLE MODELS
REVERSING VALVE COIL	135 Ω (20 ˚C)	RAC-14EH1
REACTOR L1	13 (mH), 0.224 Ω	RAC-14EH1
REACTOR L2	25.5 (mH), 0.37 Ω	RAC-14EH1
FILM CAPACITOR	45 (μF)	RAC-14EH1

COMPRESSOR MOTOR

Compressor Motor Specifications

ITEM \ MODEL		RAC-14EH1
COMPRESSOR TYPE		ASC092CD-A8JK
POWER SOURCE		DC 220 ~ 350 V
OUTPUT		750W
WINDING		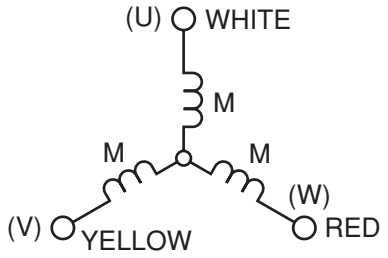
RESISTANCE (Ω)	20°C	2M=1.15
	75°C	2M=1.40

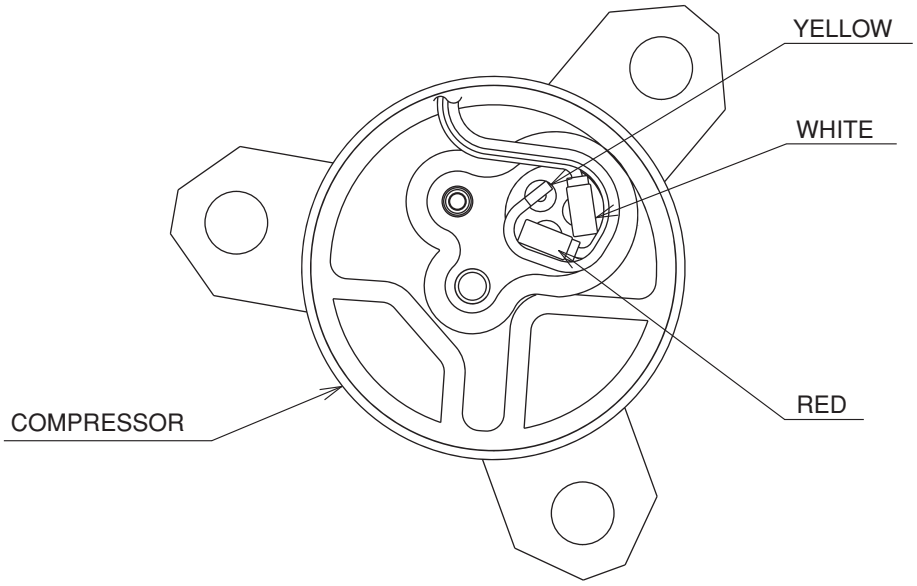

FRONT SIDE OF OUTDOOR UNIT

⚠CAUTION

When the refrigerating cycle has been operated for a long time with the capillary tubes clogged or crushed or with too little refrigerant, check the color of the refrigerating machine oil inside the compressor. If the color has been changed conspicuously, replace the compressor.

WIRING DIAGRAM

MODEL RAS-14EH1/RAC-14EH1

⚠ CAUTION
The marked parts ⚠ are very important ones for safety.

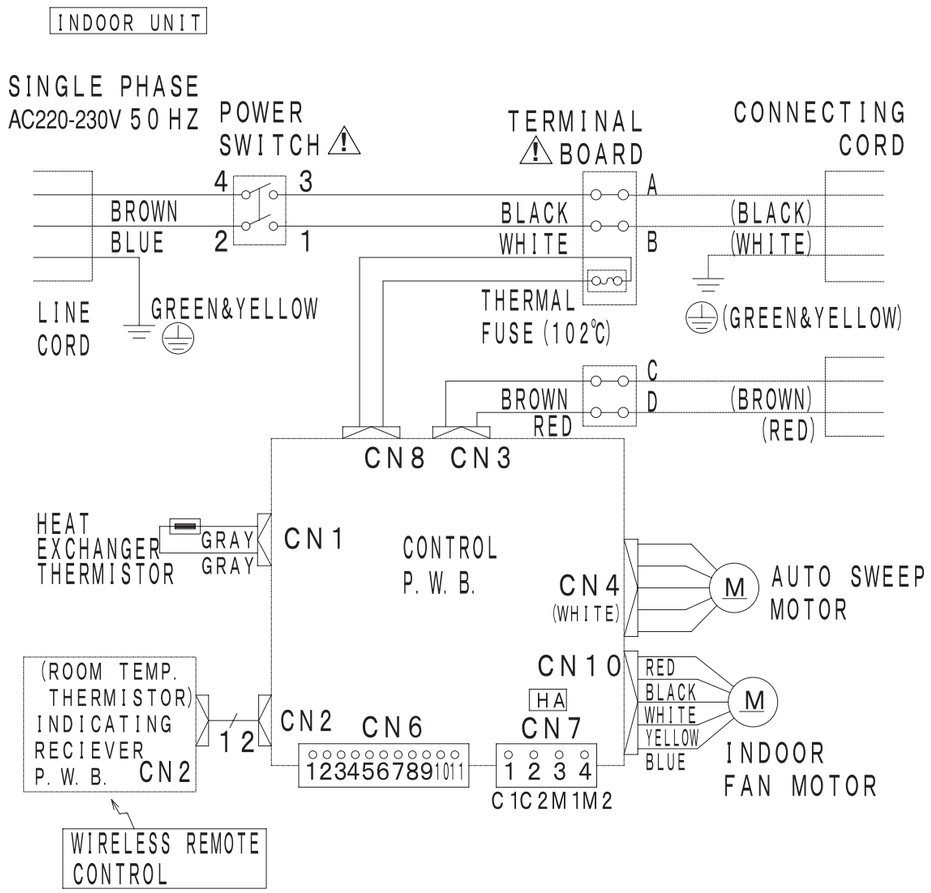

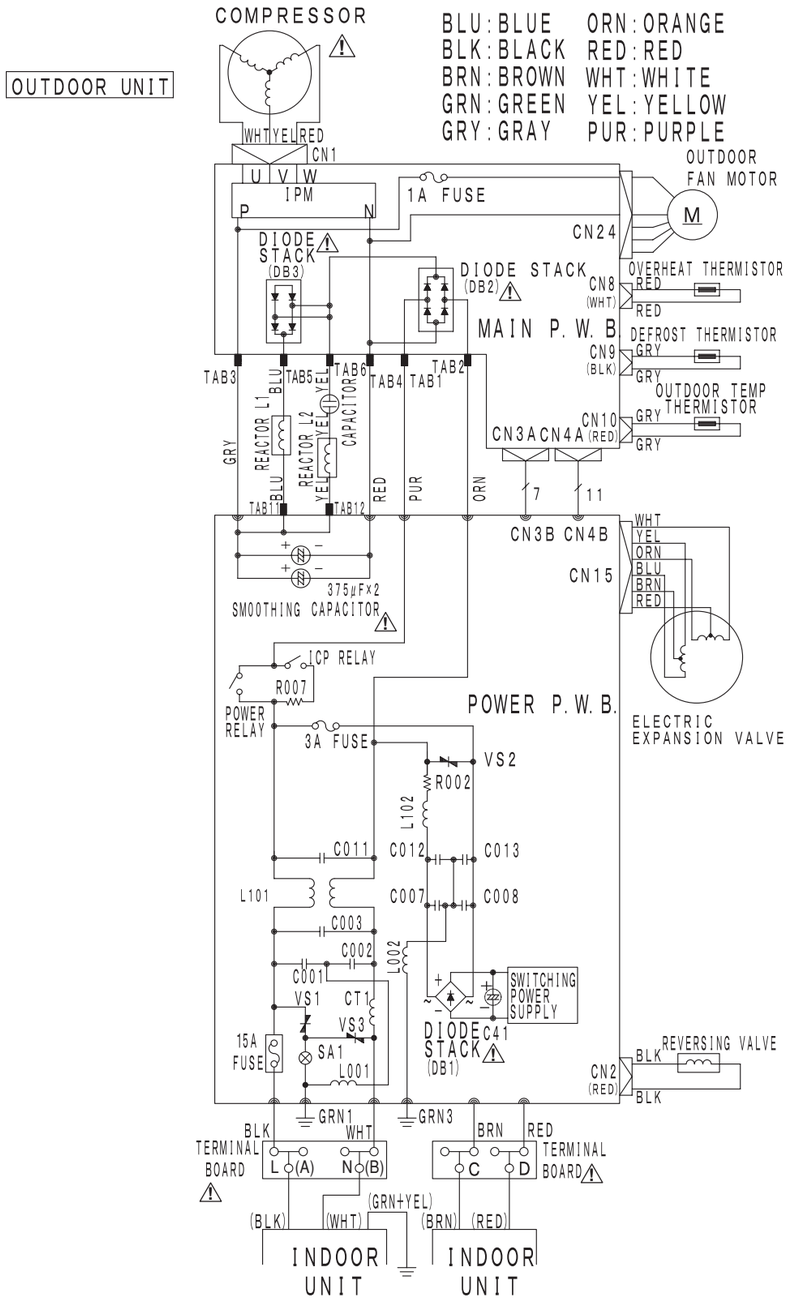

CIRCUIT DIAGRAM

MODEL RAS-14EH1

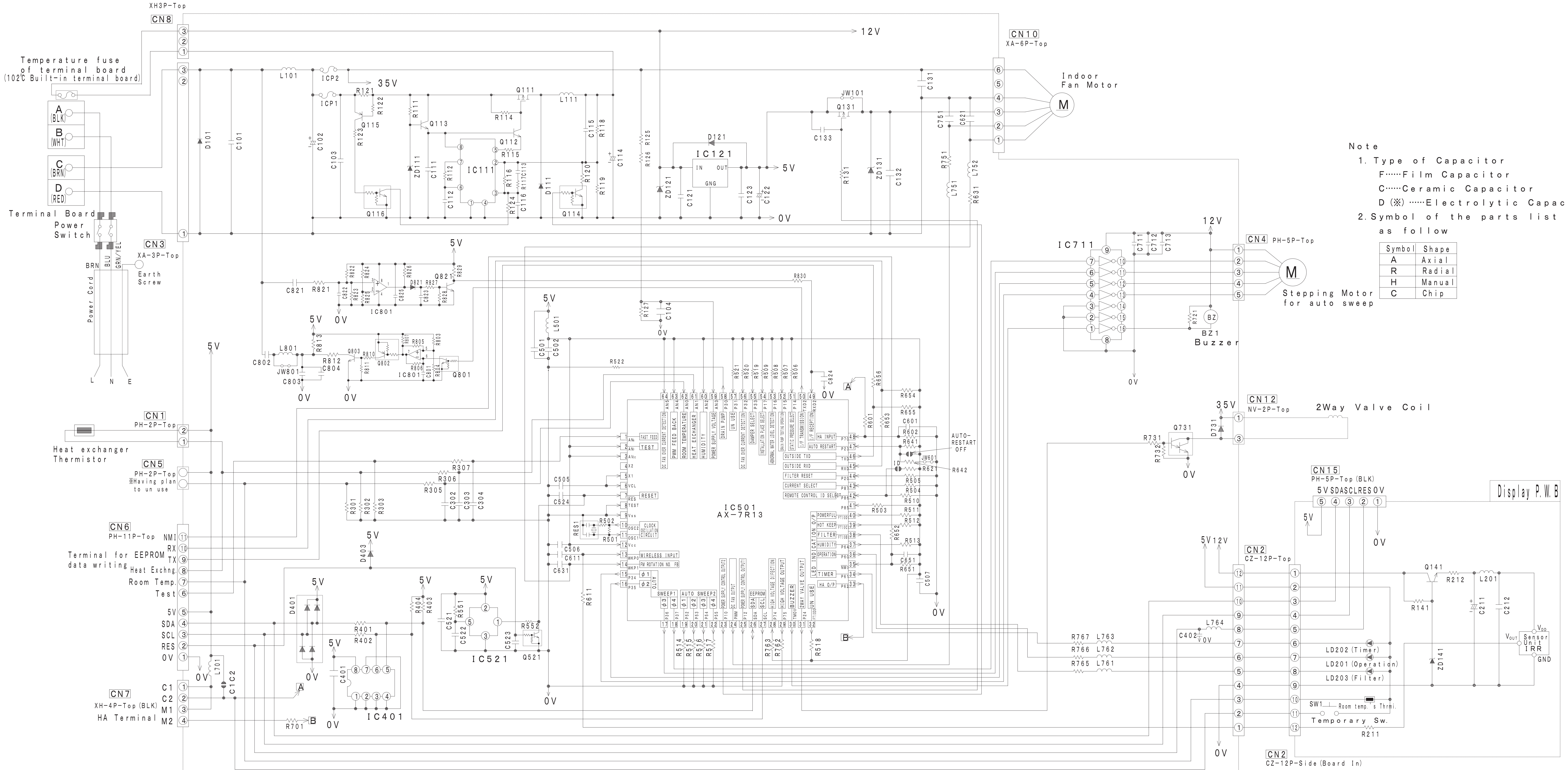

Note
1. Type of Capacitor
F……Film Capacitor
C……Ceramic Capacitor
D (※) ……Electrolytic Capacitor
2. Symbol of the parts list is as follow

Symbol	Shape
A	Axial
R	Radial
H	Manual
C	Chip

RESISTOR

Circuit's Symbol	Numerical Value (Ω)	Common diff.	Power (W)	Drawing's part's No.	Shape
R111	27K	±5%	1/10W	014	C
R112	30K	±5%	1/16W	029	C
R114	750	±5%	1/8W	010	C
R115	560	±5%	1/8W	011	C
R116	–	–	-	-	-
R117	68K	±5%	1/16W	024	C
R118	75K	±2%	1/16W	021	C
R119	6.8k	±2%	1/16W	022	C
R121	0.56	±5%	1/4W	008	C
R122	100	±5%	1/16W	042	C
R123	33K	±5%	1/16W	043	C
R124	100	±5%	1/16W	042	C
R125	30K	±5%	1/16W	029	C
R126	30K	±5%	1/16W	029	C
R127	5.1K	±5%	1/16W	040	C
R131	5.1K	±5%	1/8W	020	C
R141	2.7K	±5%	1/10W	015	C
R211	1K	±5%	1/16W	033	C
R212	47	±5%	1/10W	016	C
R301	12.7K	±1%	1/16W	018	C
R302	12.7K	±1%	1/16W	018	C
R303	10K	±5%	1/16W	030	C

Circuit's Symbol	Numerical Value (Ω)	Common diff.	Power (W)	Drawing's part's No.	Shape
R305	1K	±5%	1/16W	033	C
R306	1K	±5%	1/16W	033	C
R307	1K	±5%	1/16W	033	C
R401	390	±5%	1/16W	027	C
R402	390	±5%	1/16W	027	C
R403	5.1K	±5%	1/16W	040	C
R404	5.1K	±5%	1/16W	040	C
R501	1M	±5%	1/16W	041	C
R503	10K	±5%	1/16W	030	C
R504	10K	±5%	1/16W	030	C
R505	10K	±5%	1/16W	030	C
R506	10K	±5%	1/16W	030	C
R507	10K	±5%	1/16W	030	C
R508	10K	±5%	1/16W	030	C
R509	10K	±5%	1/16W	030	C
R510	10K	±5%	1/16W	030	C
R511	10K	±5%	1/16W	030	C
R512	10K	±5%	1/16W	030	C
R513	10K	±5%	1/16W	030	C
R514	10K	±5%	1/16W	030	C
R515	10K	±5%	1/16W	030	C
R516	10K	±5%	1/16W	030	C
R517	10K	±5%	1/16W	030	C
R518	10K	±5%	1/16W	030	C
R519	10K	±5%	1/16W	030	C
R520	10K	±5%	1/16W	030	C
R521	10K	±5%	1/16W	030	C

Circuit's Symbol	Numerical Value (Ω)	Common diff.	Power (W)	Drawing's part's No.	Shape
R522	10K	±5%	1/16W	030	C
R551	10K	±5%	1/16W	041	C
R552	1K	±5%	1/16W	033	C
R602	10K	±5%	1/16W	030	C
R611	1K	±5%	1/6W	006	A
R621	1K	±5%	1/16W	033	C
R631	1K	±5%	1/8W	012	C
R641	10K	±5%	1/16W	030	C
R642	1K	±5%	1/16W	033	C
R651	1K	±5%	1/16W	033	C
R652	100K	±5%	1/16W	042	C
R653	1K	±5%	1/16W	033	C
R654	10K	±5%	1/8W	032	C
R655	10K	±5%	1/16W	030	C
R656	1K	±5%	1/16W	033	C
R701	1K	±5%	1/16W	033	C
R721	3.3K	±5%	1/16W	036	C
R731	2.7K	±5%	1/6W	007	A
R732	10K	±5%	1/16W	030	C

Circuit's Symbol	Numerical Value (Ω)	Common diff.	Power (W)	Drawing's part's No.	Shape
R751	2.7K	±5%	1/16W	034	C
R762	10K	±5%	1/6W	009	A
R763	10K	±5%	1/6W	009	A
R765	390	±5%	1/16W	027	C
R766	390	±5%	1/16W	026	C
R767	390	±5%	1/16W	027	C
R804	120K	±5%	1/8W	039	C
R805	120K	±5%	1/16W	031	C
R806	120K	±5%	1/16W	031	C
R807	4.3K	±5%	1/16W	038	C
R810	680	±5%	1/16W	028	C
R811	2K	±5%	1/16W	035	C
R812	39	±5%	1/8W	013	C
R813	39	±5%	1/8W	013	C
R821	1K	±5%	1/16W	033	C
R822	10K	±1%	1/16W	017	C
R823	10K	±1%	1/16W	017	C
R824	8.25K	±1%	1/16W	019	C
R825	10K	±1%	1/16W	017	C
R826	1K	±5%	1/16W	033	C
R827	3K	±5%	1/16W	037	C
R828	10K	±1%	1/16W	030	C
R829	5.1K	±5%	1/16W	040	C
R830	1K	±5%	1/6W	006	A

Capacitor

Circuit's Symbol	Numerical Value (F)	Voltage	Type	Drawing's part's No.	Shape
C101	0.22μ	50V	F	062	R
C102	330μ	50V	D (LXZ)	065	R
C103	470p	630V	C	052	C
C104	0.1μ	25V	C	045	C
C111	2.2μ	10V	C	058	C
C112	1000P	50V	C	047	C
C113	0.047μ	25V	C	056	C
C114	220μ	25V	D (LXZ)	066	R
C115	–	-	-	-	-
C116	–	-	-	-	-
C121	0.1μ	25V	C	045	C
C122	100μ	10V	D (SMG)	068	R
C123	0.1μ	25V	C	045	C
C131	0.22μ	50V	C	046	C
C132	0.1μ	25V	C	045	C
C133	0.1μ	25V	C	045	C
C211	47μ	16V	D (MF)	069	R
C212	1μ	16V	C	049	C
C302	0.1μ	25V	C	045	C
C303	0.1μ	25V	C	045	C
C304	0.1μ	25V	C	045	C
C401	0.1μ	25V	C	045	C
C402	–	-	-	-	-

Circuit's Symbol	Numerical Value (F)	Voltage	Type	Drawing's part's No.	Shape
C501	0.1μ	25V	C	045	C
C502	0.1μ	25V	C	045	C
C505	0.1μ	25V	C	045	C
C506	0.1μ	25V	C	045	C
C507	0.1μ	25V	C	045	C
C521	0.1μ	25V	C	045	C
C522	0.22μ	10V	C	057	C
C523	0.1μ	25V	C	045	C
C524	0.1μ	25V	C	045	C
C601	0.1μ	25V	C	045	C
C611	1000P	50V	C	047	C
C621	–	–	-	-	-
C631	1000P	50V	C	047	C
C651	0.1μ	25V	C	045	C
C711	0.1μ	25V	C	045	C
C712	0.1μ	25V	C	045	C
C713	0.1μ	25V	C	045	C
C751	1μ	16V	C	049	C
C801	150P	50V	C	048	C
C802	0.15μ	50V	F	063	R
C803	-	-	-	-	-
C804	-	-	-	-	-
C821	0.01μ	50V	F	061	R
C822	1000P	50V	C	047	C
C823	0.047μ	25V	C	056	C
C824	0.01μ	50V	C	055	C
C825	0.1μ	25V	C	045	C

Transistor

Circuit's Symbol	Model	Drawing's part's No.	Shape
Q111	2SJ518	076	C
Q112	2SC5209H	074	C
Q113	2SC5209H	074	C
Q114	RN1102	078	C
Q115	2SA1162Y	079	C
Q116	RN1102	078	C
Q131	–	–	C
Q141	2SC2462LC	071	C
Q521	RN1102	078	C
Q731	–	–	–

Circuit's Symbol	Model	Drawing's part's No.	Shape
Q801	RN1102	078	C
Q802	RN2102	080	C
Q803	2SC3441E	072	C
Q821	2SC4738GR	073	C

LED

Circuit's Symbol	Model	Color	Drawing's part's No.	Shape
LD201	HLMF-K305	Yellow	133	H
LD202	HLMF-K405	Orange	134	H
LD203	HLMF-K505	Green	135	H

Jumper

Circuit's Symbol	Use/ Don't Use	Size	Drawing's part's No.	Shape
JW101	Use	1608	–	–
JW601	Use	1608	–	–
JW801	–	1608	–	–

Over Current Protecter

Circuit's Symbol	Model	Rating Current	Drawing's part's No.	Shape
ICP1	CCP2E-20	0.8A	103	C
ICP2	CCP2E-50	2.0A	104	C

Diode

Circuit's Symbol	Model	Drawing's part's No.	Shape
D101	DSM3MA2	091	C
D111	D1FS6	092	C
D121	1SS355	095	C
D401	HN1D03FU	093	C
D403	1SS355	095	C
D731	–	–	–
D821	1SS355	095	C

Oscillator

Circuit's Symbol	Model		Drawing's part's No.	Shape
RES1	CSTLS10M0G53	10MHz	107	R

Buzzer

Circuit's Symbol	Model	Drawing's part's No.	Shape
BZ1	PKM13EPY	131	H

Sensor Unit

Circuit's Symbol	Model	Drawing's part's No.	Shape
IRR	RPM6938-V4	130	H

Thermistor

Circuit's Symbol	Model	Drawing's part's No.	Shape
Room Temp. Thermistor	RREL4587	127	H

IC

Circuit's Symbol	Model	Drawing's part's No.	Shape
IC111	NJM2340M	082	C
IC121	LF50CDT	083	C
IC401	S-24C04BFJ	084	C
IC501	HD6433685A20H (AX-7R13)	087	C
IC521	RN5VD42C	089	C
IC711	ULN2003ANS	090	C
IC801	NJM2903M	085	C

Switch

Circuit's Symbol	Model	Drawing's part's No.	Shape
SW1	EVQP07K-SW	132	H

Zener Diode

Circuit's Symbol	Model	Drawing's part's No.	Shape
ZD111	RD6.2UJN2	101	C
ZD121	PTZ20A	098	C
ZD131	RLZ6.8A	099	C
ZD141	RD5.6UJN2	100	C

Coil

Circuit's Symbol	Numerical Value (H)	Rating Current	Drawing's part's No.	Shape
L101	82μ	1.3A	112	H
L111	560μ	0.6A	113	H
L201	BLM11A601S	0.2A	110	C
L501	1608CJ	–	025	C
L701	BLM11A601S	0.2A	110	C
L751	1608CJ	–	025	C
L752	1608CJ	–	025	C
L761	1608CJ	–	025	C
L762	1608CJ	–	025	C
L763	1608CJ	–	025	C
L764	1608CJ	–	025	C
L801	100μ	55mA	111	C

Connecter

Circuit's Symbol	Model	Drawing's part's No.	Shape
CN1	PH-2P-Top	116	H
CN2	CZ-12-Top	117	H
CN2	CZ-12P-Side (BOARD IN)	123	H
CN3	XA-3P-Top	118	H
CN4	PH-5P-Top	119	H
CN5	PH-2P-Top (Un use)		H
CN6	PH-11P-Top	120	H
CN7	XH-4P-Top (BLK)	121	H
CN8	XH-3P-Top	125	H
CN10	XA-6P-Top	122	H
CN12	–	–	–
CN15	PH-5P-Top (BLK)	124	H

MODEL RAC-14EH1

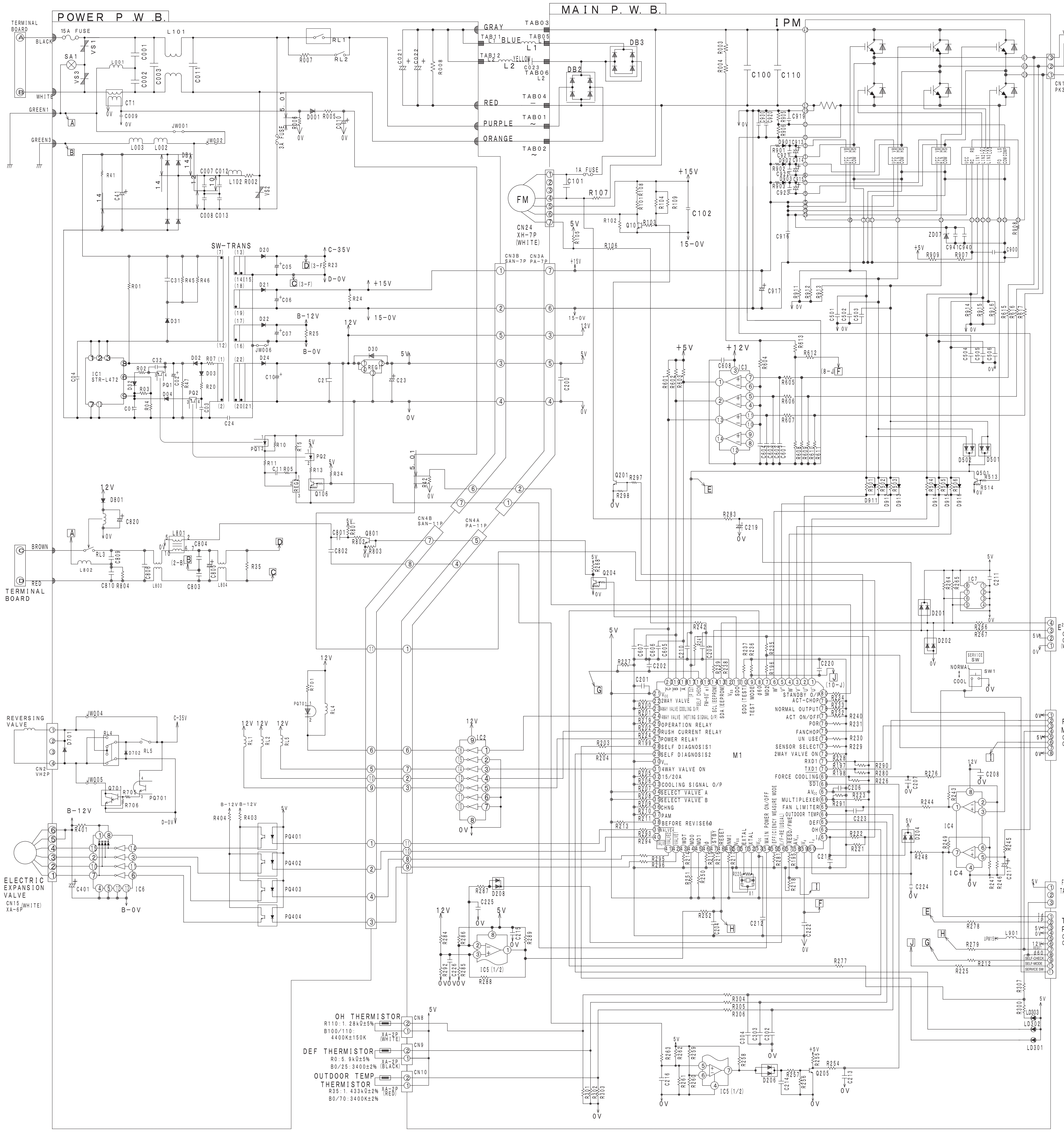

MOUNTING
A:AXIAL
R:RADIAL
H:MANUAL INSERT
C:CHIP SMT
S:OTHER SMT

BOARD
P:POWER P.W.B.
M:MAIN P.W.B.

CAPACITOR TYPE
C:CERAMIC
F:FILM
D:ELECTROLYTIC

RESISTORS

SYMBOL	REATING VALUE (Ω)	LIMIT	POWER (W)	MOUTING	BOARD
R01	1.5M	5%	1/4	A	P
R02	3.3K	5%	1/4	A	P
R03	680	5%	1/4	A	P
R04	0.68	5%	1W	R	P
R05	2.2K	5%	1/4	A	P
R07	47	2%	1/4	A	P
R10	1K	1%	1/4	A	P
R11	1K	1%	1/4	A	P
R13	390	5%	1/4	A	P
R15	33	1%	1/4	A	P
R20	2.2K	5%	1/4	A	P
R23					P
R24					P
R25	100K	5%	1/4	A	P
R34					P
R35	6.8k	5%	1	R	P
R39			2	R	P
R41	1M	5%	1/4	A	P
R42	10K	5%	1/6	A	P
R45	220K	5%	2	A	P
R46	220K	5%	2	A	P
R47	470K	5%	1/6	A	P
R002	2.2	5%	5	H	P
R003	360K	0.5%	1/2	A	M
R004	360K	0.5%	1/2	A	M
R005	1.96K	1%	1/6	A	P
R006	1K	1%	1/6	A	P
R007	100	5%	10	H	P
R008	240K	5%	1/2	A	P
R101	1.8K	1%	1/10	C	M
R102	3K	1%	1/16	C	M
R103	390	5%	1/16	C	M
R104	15K	5%	1/16	C	M
R105	4.7K	5%	1/16	C	M
R106	10K	5%	1/16	C	M
R107	0.24	0.5%	2	R	M
R108	1.8K	1%	1/10	C	M
R109	15K	5%	1/16	C	M
R195	390	5%	1/16	C	M
R196	390	5%	1/16	C	M
R197	390	5%	1/16	C	M
R198	390	5%	1/16	C	M
R199	100	5%	1/16	C	M
R200	10K	5%	1/16	C	M
R201	10K	5%	1/16	C	M
R202	10K	5%	1/16	C	M
R203	2K	5%	1/16	C	M
R204	2K	5%	1/16	C	M
R205	100	5%	1/16	C	M
R206	10K	5%	1/16	C	M
R207	10K	5%	1/16	C	M
R208	10K	5%	1/16	C	M
R209	10K	5%	1/16	C	M
R210	10K	5%	1/16	C	M
R211	10K	5%	1/16	C	M
R212	1K	5%	1/16	C	M
R213	10K	5%	1/16	C	M
R214	10K	5%	1/16	C	M
R215	10K	5%	1/16	C	M
R216	10K	5%	1/16	C	M
R217	10K	5%	1/16	C	M
R218	10K	5%	1/16	C	M
R219	100	5%	1/16	C	M
R220	1M	5%	1/16	C	M
R221	10K	1%	1/16	C	M
R222	510	5%	1/16	C	M
R223	10K	5%	1/16	C	M
R224	100	5%	1/16	C	M
R225	1K	5%	1/16	C	M
R226	10K	5%	1/16	C	M
R227	10K	5%	1/16	C	M
R228	10K	5%	1/16	C	M
R229	10K	5%	1/16	C	M
R230	10K	5%	1/16	C	M
R231	10K	5%	1/16	C	M
R232	10K	5%	1/16	C	M
R233	10K	5%	1/16	C	M
R234	100	5%	1/16	C	M
R235	10K	5%	1/16	C	M
R236	10K	5%	1/16	C	M
R237	10K	5%	1/16	C	M
R238	100	5%	1/16	C	M
R239	100	5%	1/16	C	M
R240	10K	5%	1/16	C	M
R241	5.6K	5%	1/16	C	M
R242	1K	5%	1/16	C	M
R243	6.98K	1%	1/16	C	M
R244	2K	5%	1/16	C	M
R245	10K	5%	1/16	C	M
R246	1K	1%	1/16	C	M
R247	1.5K	1%	1/16	C	M

RESISTORS

SYMBOL	REATING VALUE (Ω)	LIMIT	POWER (W)	MOUTING	BOARD
R248	2K	5%	1/16	C	M
R249	20K	1%	1/16	C	M
R250	10K	5%	1/16	C	M
R251	10K	5%	1/16	C	M
R252	5.1K	5%	1/16	C	M
R254	100	5%	1/16	C	M
R255	2K	5%	1/16	C	M
R256	10K	5%	1/16	C	M
R257	3K	5%	1/16	C	M
R258	1K	5%	1/16	C	M
R259	8.25K	1%	1/16	C	M
R260	10K	1%	1/16	C	M
R261	10K	1%	1/16	C	M
R262	10K	1%	1/16	C	M
R263	1K	5%	1/16	C	M
R264	5.1K	5%	1/16	C	M
R265	5.1K	5%	1/16	C	M
R266	390	5%	1/16	C	M
R267	390	5%	1/16	C	M
R268	2K	5%	1/16	C	M
R276	100	5%	1/16	C	M
R277	100	5%	1/16	C	M
R278	100	5%	1/16	C	M
R279	100	5%	1/16	C	M
R280	10K	5%	1/16	C	M
R281	10K	5%	1/16	C	M
R283	10K	5%	1/16	C	M
R284	10K	2%	1/16	C	M
R285	4.7K	2%	1/16	C	M
R286	5.1K	2%	1/16	C	M
R287	1.8K	2%	1/16	C	M
R288	51K	5%	1/16	C	M
R289	5.1K	5%	1/16	C	M
R290	10K	5%	1/16	C	M
R291	10K	5%	1/16	C	M
R292	3K	2%	1/16	C	M
R293	390	5%	1/16	C	M
R294	390	5%	1/16	C	M
R295	390	5%	1/16	C	M
R296	390	5%	1/16	C	M
R297	10K	5%	1/16	C	M
R298	5.1K	5%	1/16	C	M
R300	2K	5%	1/16	C	M
R301	3.74K	1%	1/16	C	M
R302	3.01K	1%	1/16	C	M
R303	3.01K	1%	1/16	C	M
R304	100	5%	1/16	C	M
R305	100	5%	1/16	C	M
R306	100	5%	1/16	C	M
R307	1K	5%	1/16	C	M
R401	100	5%	1/4	A	P
R403	1K	5%	1/4	A	P
R404	1K	5%	1/4	A	P
R501	2K	5%	1/16	C	M
R502	2K	5%	1/16	C	M
R503	2K	5%	1/16	C	M
R504	2K	5%	1/16	C	M
R505	2K	5%	1/16	C	M
R506	2K	5%	1/16	C	M
R513	10K	5%	1/16	C	M
R514	5.1K	5%	1/16	C	M
R601	2K	5%	1/16	C	M
R602	2K	5%	1/16	C	M
R603	2K	5%	1/16	C	M
R604	100	5%	1/16	C	M
R605	100	5%	1/16	C	M
R606	100	5%	1/16	C	M
R607	100	5%	1/16	C	M
R608	6.65K	1%	1/16	C	M
R609	6.65K	1%	1/16	C	M
R610	6.65K	1%	1/16	C	M
R611	6.65K	1%	1/16	C	M
R612	100K	5%	1/16	C	M
R613	0		1/16	C	M
R615	360K	0.5%	1/2	A	M
R616	360K	0.5%	1/2	A	M
R617	360K	0.5%	1/2	A	M
R701	1.2K	5%	1/4	A	P
R705	7.5K	5%	1/2	A	P
R706	10K	5%	1/6	A	P
R801	39	5%	1/4	A	P
R802	39	5%	1/4	A	P
R803	3K	5%	1/6	A	P
R804					P
R901	10	5%	1/16	C	M
R902	10	5%	1/16	C	M
R903	10	5%	1/16	C	M
R905	453	1%	1/16	A	M
R906	100	1%	1/16	A	M
R907	1M	5%	1/16	C	M
R908	30K	1%	1/16	C	M
R909	510K	5%	1/16	C	M
R911					M
R912					M
R913					M
R914	100K	5%	1/16	C	M
R915	100K	5%	1/16	C	M
R916	100K	5%	1/16	C	M

CAPACITORS

SYMBOL	RATING VALUE (μF)	VOLT (V)	TYPE	MOUTING	BOARD
C01	470p	50	C	R	P
C02	10	50	D	R	P
C03	1500p	50	C	R	P
C04	470p	2K	C	R	P
C05	560	50	D	R	P
C06	330	25	D	R	P
C07	330	25	D	R	P
C10	330	25	D	R	P
C11	0.1	50	C	R	P
C21	0.1	50	C	R	P
C23	470	10	D	R	P
C24	470p	2K	C	R	P
C31	0.01	DC 630	C	R	P
C32	0.01	50	C	R	P
C41	68	450	D	H	P
C001	0.01	AC 250	C	R	P
C002	0.01	AC 250	C	R	P
C003	0.47	AC 250	F	H	P
C006					M
C007	0.01	AC 250	C	R	P
C008	0.01	AC 250	C	R	P
C009	0.1	50	C	R	P
C010	100	10	D	R	P
C011	0.47	AC 250	F	H	P
C012	0.01	AC 250	C	R	P
C013	0.01	AC 250	C	R	P
C021	400	420	D	H	P
C022	400	420	D	H	P
C023	45	AC 230	F	H	
C100	0.01	DC 1kV	C	R	M
C101	0.082	DC 630	F	H	M
C102	0.1	25	C	C	M
C110					M
C200	0.1	25	C	C	M
C201	0.1	25	C	C	M
C202	0.1	25	C	C	M
C204	0.047	50	C	C	M
C206	0.1	25	C	C	M
C207	0.047	50	C	C	M
C208	0.1	25	C	C	M
C209	0.0047	50	C	C	M
C210	0.047	50	C	C	M
C211	0.1	25	C	C	M
C212	0.1	25	C	C	M
C213	0.047	50	C	C	M
C214	0.068	25	C	C	M
C215	0.1	25	C	C	M
C216	0.0047	50	C	C	M
C217	22	10	D	R	M
C218	0.1	25	C	C	M
C219	22	10	D	R	M
C220	0.1	25	C	C	M
C222	0.022	25	C	C	M
C223	0.01	50	C	C	M
C224	0.01	50	C	C	M
C225	0.01	50	C	C	M
C226	0.1	25	C	C	M
C302	0.1	25	C	C	M
C303	0.1	25	C	C	M
C304	0.1	25	C	C	M
C401	100	25	D	R	P
C501	470p	50	C	C	M
C502	470p	50	C	C	M
C503	470p	50	C	C	M
C504					M
C505					M
C506					M
C601	0.00068	50	C	C	M
C602	0.00068	50	C	C	M
C603	0.00068	50	C	C	M
C604	0.00068	50	C	C	M
C605	0.001	50	C	C	M
C606	0.001	50	C	C	M
C607	0.001	50	C	C	M
C608	0.1	25	C	C	M
C801	0.15	50	F	R	P
C802	0.022	50	F	R	P
C803	0.01	AC 250	C	R	P
C804	0.01	AC 250	C	R	P
C805	68	50	D	R	P
C806	0.15	50	F	R	P
C809	0.01	AC 250	C	R	P
C810	0.01	AC 250	C	R	P
C820	100	25	D	R	P

CAPACITORS

SYMBOL	RATING VALUE (μF)	VOLT (V)	TYPE	MOUTING	BOARD
C900	2200p	50	C	C	M
C913	10	25	D	C	M
C914	10	25	D	C	M
C915	10	25	D	C	M
C916	0.1	25	C	C	M
C917	10	25	D	C	M
C919	0.01	50	C	C	M
C920	0.1	25	C	C	M
C921					M
C922					M
C923					M
C930					M
C940	1	25	C	C	M
C941					M

DIODES

SYMBOL	MODEL	MOUTING	BOARD
DB1	D2SB60	H	P
DB2	D10XB60	H	M
DB3	D10XB60	H	M
D02	1GH46	A	P
D03	1GH46	A	P
D04	1GH46	A	P
D20	RL4Z	H	P
D21	AL01Z	A	P
D22	RN2Z	H	P
D24	AG01Z	A	P
D30	1SS120	A	P
D31	EG01C	A	P
D32	AG01Z	A	P
D001	1SS120	A	P
D201	DAN202K	C	M
D202	DAP202K	C	M
D204	DAN202K	C	M
D206	DAN202K	C	M
D208	DAN202K	C	M
D501	DAN202K	C	M
D502	DAN202K	C	M
D701	1GH46	A	P
D702			P
D801	1SS120	A	P
D901	D1NL40	H	M
D902	D1NL40	H	M
D903	D1NL40	H	M
D911			M
D912			M
D913			M
D914			M
D915			M
D916			M

JUMPER

SYMBOL	USE/UN USE	MOUTING	BOARD
JW001	UNUSE	A	P
JW002	UNUSE	A	P
JW004	USE	A	P
JW005	USE	A	P
JW006	USE	A	P

ZENER DIODE

SYMBOL	MODEL	MOUTING	BOARD
ZD01			P
ZD07	UDZS 20B	C	M

TRANSISTORS

SYMBOL	MODEL	MOUTING	BOARD
Q101	2SC2412K	C	M
Q106	DTC114YSA	R	P
Q201	2SC2412K	C	M
Q204	RN1402	C	M
Q205	2SC2412K	C	M
Q501	2SC2412K	C	M
Q701	2SC1214CTZ	R	P
Q801	2SC1214CTZ	R	P

RELAY

SYMBOL	MODEL	MOUTING	BOARD
RL1	G4A	H	P
RL2	FTR-F3AA012E	H	P
RL3	FTR-F3AA012E	H	P
RL4			P
RL5			P

PHOTO COUPLERS

SYMBOL	MODEL	MOUTING	BOARD
PQ1	TLP421	H	P
PQ2	TLP421	H	P
PQ401	TLP421	H	P
PQ402	TLP421	H	P
PQ403	TLP421	H	P
PQ404	TLP421	H	P
PQ701	TLP421	H	P

COILS・INDUCTORS

SYMBOL	RATING	MOUTING	BOARD
L001	HF70BTL3.5*6R	A	P
L002	HF70BTL3.5*6R	A	P
L003	J/W	A	P
L101	2mH 15A	H	P
L102	4mH 2A (RRMH3728)	H	P
L801	RRMF3787	H	P
L802	HF70BTL3.5*6R	A	P
L803	RRMH3573	H	P
L804	RRMH3573	H	P
L901	BLM11A601S (RRMH3522)	C	M
CT1	RRMF3484	H	P

SURGE ABSORBERS

SYMBOL	RATING	MOUTING	BOARD
VS1	450NR-12D	R	P
VS2	450NR-12D	R	P
VS3	450NR-12D	R	P
SA1	RA-102M-C6-Y	R	P

SWITCH

SYMBOL	MODEL	MOUTING	BOARD
SW1	EVQPAE07K	R	M

OSCILLATOR

SYMBOL	MODEL	MOUTING	BOARD
X1	CSTCV16MXJ0C3	C	M

LED

SYMBOL	MODEL	MOUTING	BOARD
LD301	RED(TYP. IF=10mA VF=2.1V)	R	M
LD302	RED(TYP. IF=10mA VF=2.1V)	R	M
LD303	RED(TYP. IF=10mA VF=2.1V)	R	M

IC

SYMBOL	RATING	MOUTING	BOARD
IC1	STR-L472	H	P
IC2	ULN2003ANS	S	M
IC3	BA10339F	S	M
IC4	NJM2904M-TE3	S	M
IC5	NJM2903V-TE1	S	M
IC6	M54532P	H	P
IC7	S24C02BFJ-TB	S	M
REG1	PQ05RD08	H	P
REG2	SE012	H	P
M1	AX-8T11	S	M
IPM	SSM1001MA	H	M

BLOCK DIAGRAM

MODEL RAS-14EH1 / RAC-14EH1

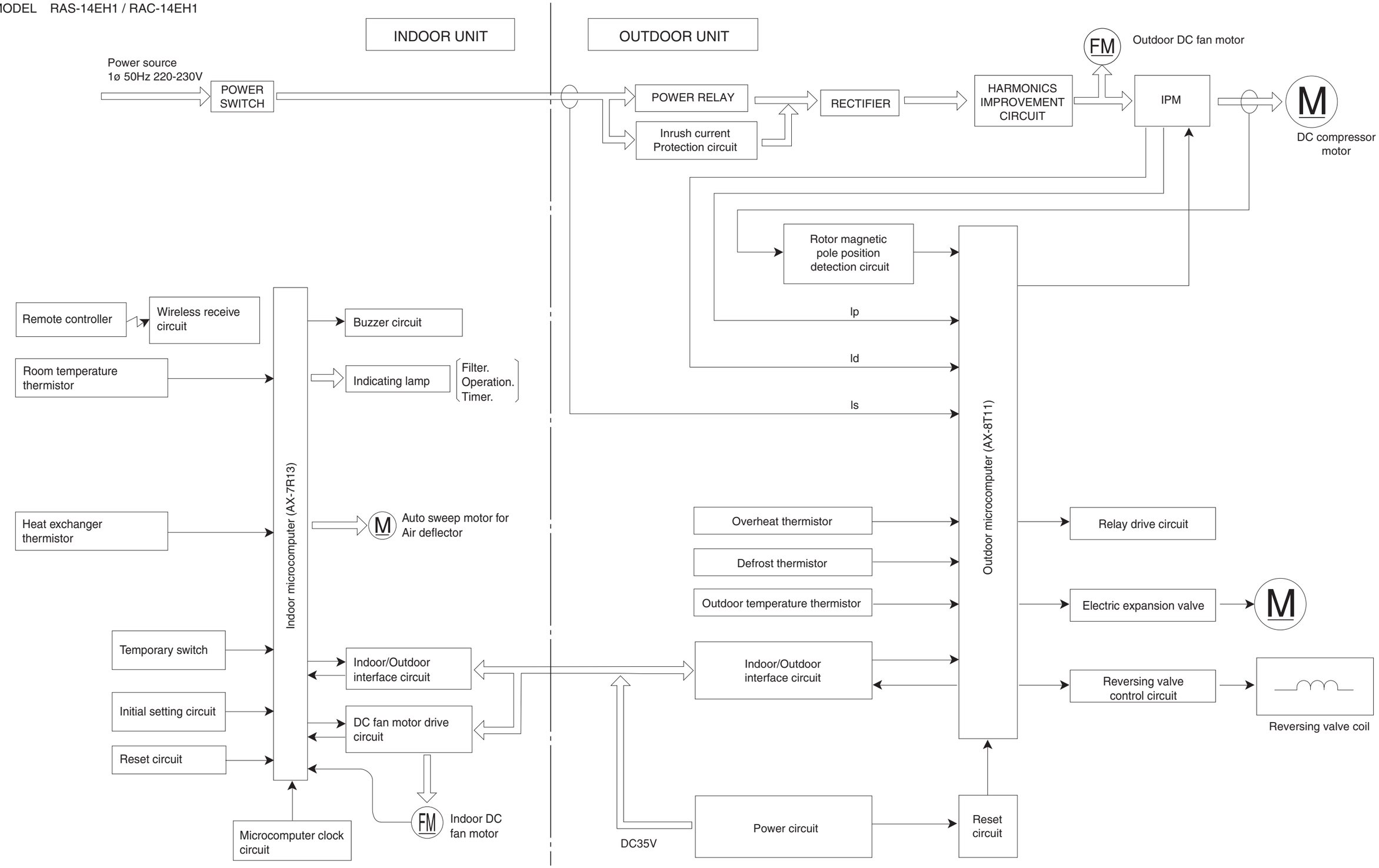

BASIC MODE

MODEL RAS-14EH1

Operation mode		Fan	Cooling	Dehumidifying (dehumidifying operation by the function select button only, not including that engaged by the dehumidify button)	Heating	auto
Basic operation of start/stop button						
Timer functions	Off-timer	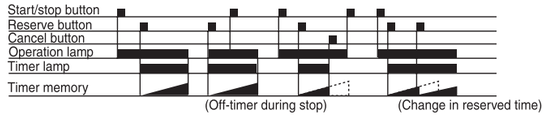				
Timer functions	On-timer	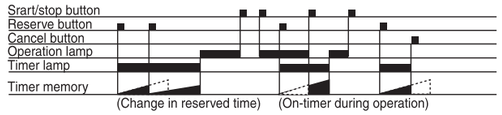				
Timer functions	Off -> On On -> Off timer	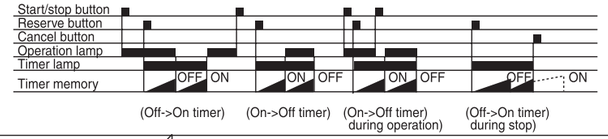				
Fan speed mode (indoor fan)	Auto		Changes from “Hi” to “Med” or “Lo” depending on room temperature. 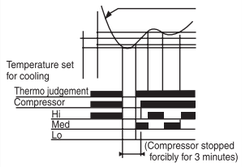 1. Runs at “Hi” until first thermo off after operation is started. 2. Runs at “Lo” when thermo is off.		Set to “ultra-Lo”, “Lo”, “Med”, “Hi”, “ultra-Hi” or “stop” depending on the room temperature, time and heat exchange temperature. Set to “stop” if the room temperature is 18˚C in the “ultra-Lo” mode other than during preheating (cooling is recovered at 18.33˚C). When the compressor is running at maximum speed during hot dash or when recovered from defrosting. In modes other than left 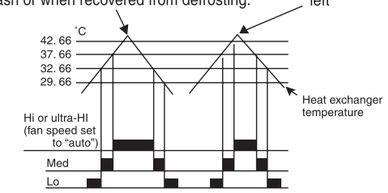	Operating mode is judged by room temperature and outdoor temperature. (1) Judging by outdoor temperature Operating mode is judged by outdoor temperature. Only when the mode is not resticted by this judgment, the judgment by room temperature in the next paragraph will be performed. (a) Outdoor temperature ≧ 27°C : Restricted to cooling (b) Outdoor temperature ≦ 16°C : Restricted to heating (2) Judging by room temperature Operating mode at start up is judged (initial judgment) (a) Conditions for judgment (any of the followings) • When auto operation is started after 1 hour has elapsed since the operation was stopped. • When auto operation is started after the previous manual mode operation. • When the operating mode is switched to auto while operating at manual mode. (b) Judging method • Room temperature ≧ 25°C ±3°C : Cooling • Room temperature < 25°C ±3°C : Heating ※ ±3°C is the fine adjustment value from the remote controller. 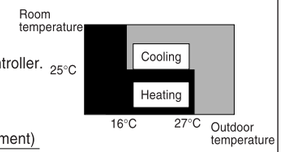 Judging operating mode change during operation (Continuous judgment) (a) Conditions for judgment (any of the followings) • The mode is reviewed at every interval time. • When auto operation is started again before 1 hour has elapsed since the operation was stopped. (b) Judging method • Judge by setting the hysteresis on the final preset temperature. The final preset temperature is the actually targeted preset temperature which is the sum of the basic preset temperature and each type of shift value (e.g. ±3°C by remote controller, preset temperature correction value, powerful shift value, etc.) [Currently cooling] • Room temperature ≦ Final preset temperature −2°C Change to heating • Room temperature > Final preset temperature −2°C Continue cooling [Currently heating] • Room temperature ≧ Final preset temperature +3°C Change to cooling • Room temperature < Final preset temperature +3°C Continue heating 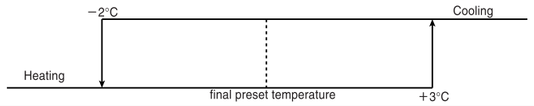
Fan speed mode (indoor fan)	Hi	Operates at “Hi” regardless of the room temperature.	Set to “ultra-Hi” when the compressor runs at maximum speed, and to “Hi” in other modes.		Set to “ultra-Lo”, “Lo”, “Med”, “Hi”, “ultra-Hi” or “stop” depending on the room temperature, and time. Set to “stop” if the room temperature is 18˚C in the “ultra-Lo” mode other than during preheating (cooling is recovered at 18.33˚C). Set to “ultra-Hi” when the compressor is running at maximum speed during hot dash or when recovered from defrosting.	
Fan speed mode (indoor fan)	Med	Operates at “Med” regardless of the room temperature.	Same as at left.		Set to “ultra-Lo”, “Lo”, “Med” or “stop” depending on the room temperature and time. Set to “stop” if the room temperature is 18˚C in the “ultra-Lo” mode other than during preseating (cooling is recovered at 18.33˚C).	
Fan speed mode (indoor fan)	Lo	Operates at “Lo” regardless of the room temperature.	Same as at left.	Set to “Lo” in modes other than when the compressor stops.	Set to “ultra-Lo”, “Lo”, or “stop” depending on the room temperature and time. Set to “stop” if the room temperature is 18˚C in the “ultra-Lo” mode other than during preseating (cooling is recovered at 18.33˚C). The fan speed is controlled by the heat exchanger temperature; the overload control is executed as in the following diagram: 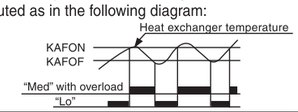	
Basic operation of temperature controller		Performs only fan operation at the set speed regardless of the room temperature. 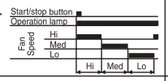	See page 25.	See page 26.	See page 27.	
Sleep operation (with sleep button ON)		• Enters sleep operation after set as on the left. • Action during sleep operation Lo (sleep) operation	• Same as at left • See page 26.	• Same as at left • See page 26.	• Same as at left • See page 28.	• Same as at left. • Performs the sleep operation of each operation mode.

Table 1 Mode data file

	RAS-14EH1
LABEL NAME	**VALUE**
WMAX	5200 min^{-1}
WMAX2	5200 min^{-1}
WSTD	5050 min^{-1}
WBEMAX	3800 min^{-1}
CMAX	4800 min^{-1}
CMAX2	4800 min^{-1}
CSTD	4300 min^{-1}
CKYMAX	4200 min^{-1}
CJKMAX	3400 min^{-1}
CBEMAX	2900 min^{-1}
WMIN	2500 min^{-1}
CMIN	2500 min^{-1}
STARTMC	90 Seconds
DWNRATEW	80%
DWNRATEC	60%
SHIFTW	2.00°C
SHIFTC	1.33°C
CLMXTP	30.00°C
YNEOF	25.00°C
TEION	5.00°C
TEIOF	9.00°C
SFTDSW	1.00°C
DFTIM1	43 Minutes
DFTIM2	60 Minutes

Basic Cooling Operation

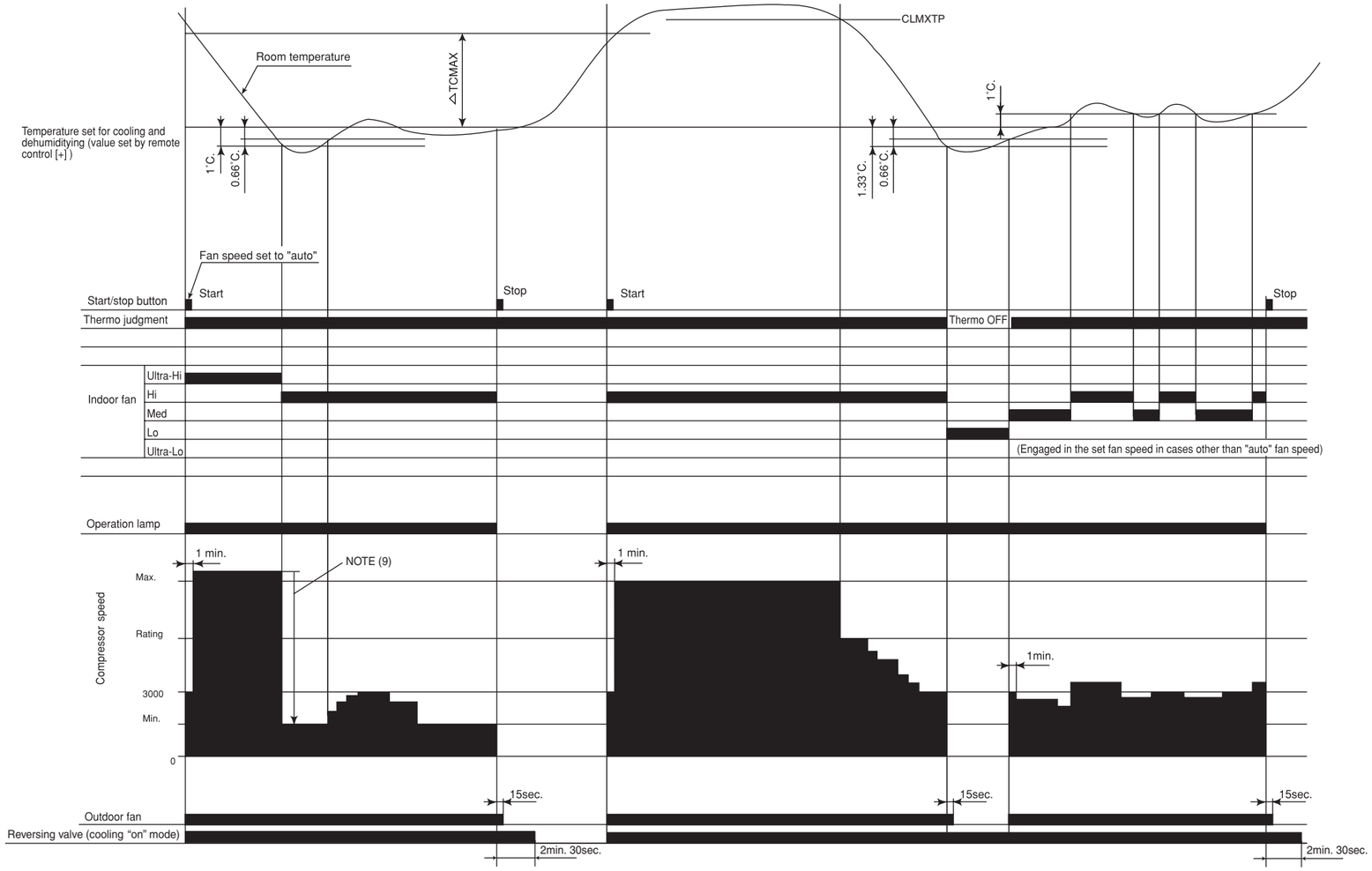

Notes:

(1) Condition for entering into Cool Dashed mode. When fan set to “Hi” or “Auto mode” and temperature difference between indoor temperature and set temperature has a corresponding compressor speed (calculated value in Table 2) larger than CMAX.

(2) Cool Dashed will release when i) a maximum 25 minutes is lapsed and ii) room temperature is lower than set temperature –3°C (thermo off) and iii) when room temperature has achieved setting temperature –1°C then maximum Cool Dashed time will be revised to 20 minutes. And iv) indoor fan is set to Lo and Med fan mode and v) change operation mode.

(3) During Cool Dashed operation, thermo off temperature is set temperature (with shift value) –3°C. After thermo off, operation continue in Fuzzy control mode.

(4) Compressor minimum “ON” time and “OFF” time is 3 minutes.

(5) During normal cooling mode, compressor maximum speed CMAX will maintain for 60 minutes if indoor temperature is lower than CLMXTP. No time constrain if indoor temperature is higher than CLMXTP.

(6) When fan speed setting on remote control is “Hi” or “Auto” mode, and both room and outdoor temperatures (data based on out door unit) meet temperature judgment (Off) shown in the table 1, the compressor speed will be limited to CKYMAX.

(7) When fan is set to “Med”, compressor speed will be limited to CJKMAX.

(8) When fan is set to “Lo”, compressor speed will be limited to CBEMAX.

(9) During Cool Dashed, when room temperature reaches set temperature –1°C compressor speed is actual speed x DWNRATEC.

Table 1 Thermo judgment

Item		Temperature
Room temperature	Thermo judgment (ON)	30°C
	Thermo judgment (OFF)	32°C
Outdoor temperature	Thermo judgment (ON)	32°C
	Thermo judgment (OFF)	33°C

Table 2 Compressor speed

Calculated compressor speed	Temperature difference (with shift value)
3500 min^{-1}	1.66°C
3900 min^{-1}	2.00°C
4300 min^{-1}	2.33°C
4700 min^{-1}	2.66°C

Cooling Sleep Operation

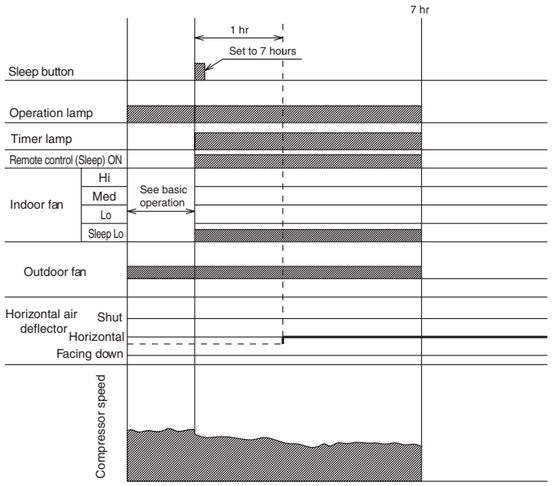

Notes:

(1) The sleep operation starts when the sleep button is pressed.
(2) When the sleep button is set, the maximum compressor speed is limited to CBEMAX, and the indoor fan is set to "sleep Lo".
(3) The indoor fan speed does not change even when the fan speed mode is changed.
(4) If sleep operation is canceled by the cancel button or sleep button, all data is cleared.

Cooling Defrost

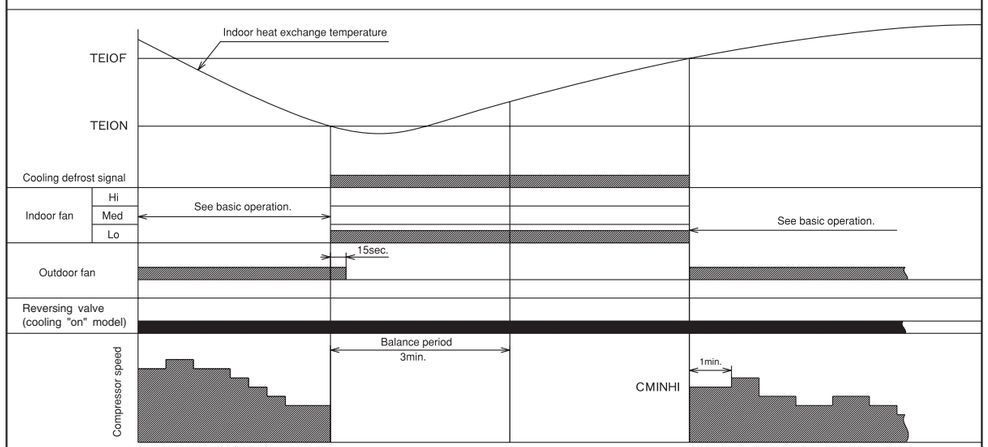

Dehumidifying Operation

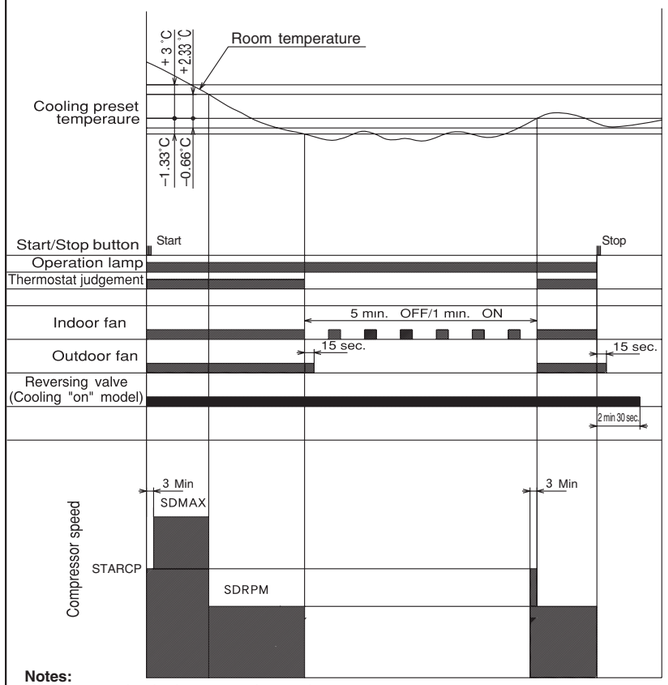

Notes:

(1) The operation is done assuming as the preset temperature
= (room temperature at the time) – (2°C).
(2) The indoor fan is operated in the "Lo" mode. During thermo OFF indoor fan will be OFF for 5 minutes and ON for 1 minute.
(3) When the operation is started by the themostat turning ON, the start of the indoor fan is delayed 32 seconds after the start of compressor operation.
(4) The compressor is operated forcedly for 3 minutes after operation is started.
(5) The minimum ON time and OFF time of the compressor are 3 minutes.

Dehumidifying Sleep Operation

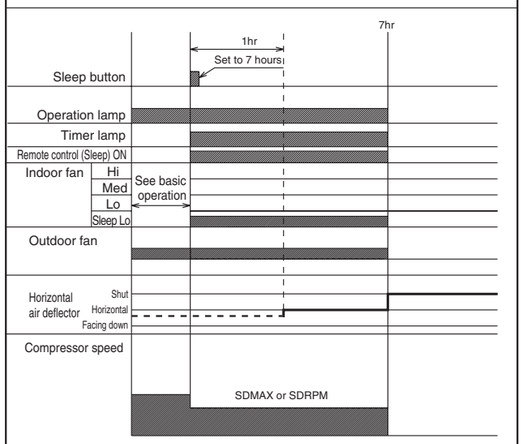

Notes:

(1) The sleep operation starts when the sleep button is pressed.
(2) When the sleep button is set, the indoor fan is set to "sleep Lo".
(3) The indoor fan speed does not change even when the fan speed mode is changed.
(4) If sleep operation is canceled by the cancel button or sleep button, all data is cleared.

Basic Heating Operation

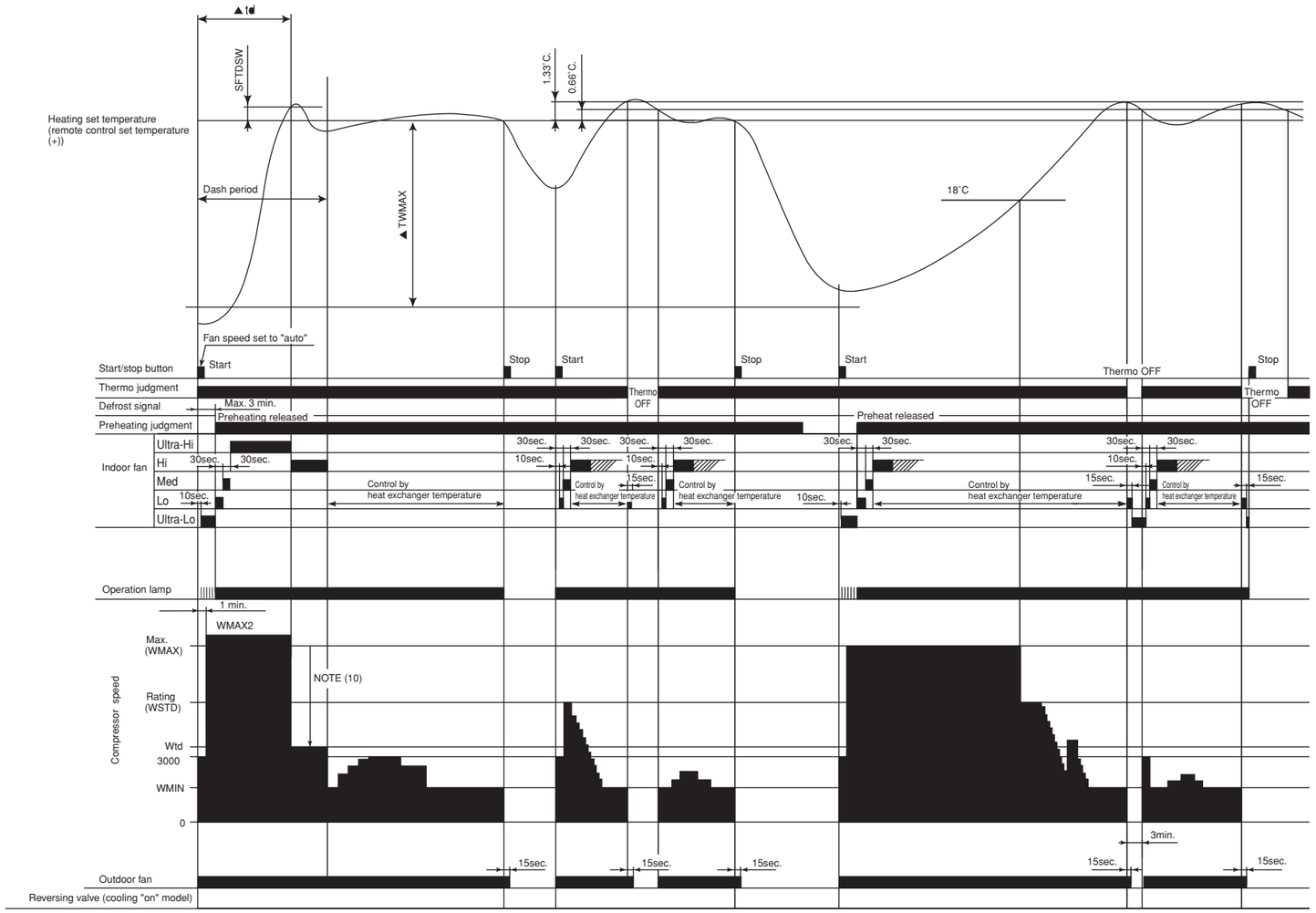

Notes:

(1) Condition for entering into Hot Dashed mode. When fan set to “Hi” or “Auto mode” and i) Indoor temperature is lower than 18°C, and ii) outdoor temperature is lower than 10°C, and iii) Temperature difference between indoor temperature and set temperature has a corresponding compressor speed (calculated value in Table 3) larger than WMAX.

(2) Hot Dashed will release when i) Room temperature has achieved the set temperature + SFTDSW. ii) Thermo off.

(3) During Hot Dashed operation, thermo off temperature is set temperature (with shift value) +3°C. After thermo off, operation continue in Fuzzy control mode.

(4) Compressor minimum “ON” time and “OFF” time is 3 minutes.

(5) During normal heating mode, compressor maximum speed WMAX will maintain for 120 minutes if indoor temperature is higher than 18°C. No time limit constrain if outdoor temperature is lower than 4°C.

(6) During Hotkeep or Defrost mode, indoor operation lamp will blink at interval of 0.5 seconds “ON” and 0.5 second “OFF”.

(7) When heating mode starts, it will enter into Hotkeep mode if indoor heat exchanger temperature is lower than YNEOF + 0.33°C.

(8) When fan is set to “Lo”, compressor speed will be limited to WBEMAX. When fan is set to "Med", compressor speed will be limited to WJKMAX.

(9) In “Ultra-Lo” fan mode, if indoor temperature is lower than 18°C, indoor fan will stop. If indoor temperature is higher than 18°C + 0.33°C, fan will continue in “Ultra-Lo” mode. During Hotkeep or Defrost mode, fan will continue in “Ultra-Lo” mode.

(10) During Hot Dashed, when room temperature reaches set temperature + SFTDSW compressor speed is actual speed x DWNRATEW.

Table 3 Compressor speed

Calculated compressor speed	Temperature difference (with shift value)
3500 min^{-1}	1.66°C
3900 min^{-1}	2.00°C
4300 min^{-1}	2.33°C
4700 min^{-1}	2.66°C
5100 min^{-1}	3.00°C
5200 min^{-1}	3.33°C

Reversing Valve Defrosting

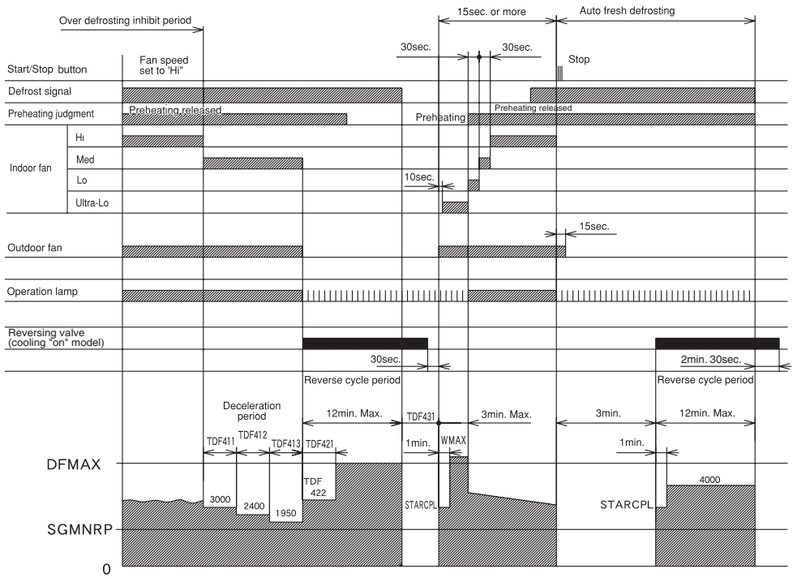

Notes:

(1) The defrosting inhibit period is set as shown in the diagram below. When defrosting has finished once, the inhibit period is newly set, based on the outdoor temperature when the compressor was started. During this period, the defrost signal is not accepted.
(2) If the difference between the room and outdoor temperature is large when defrosting is finished, the maximum compressor speed (WMAX) or (WMAX2) can be continued for 120 minutes maximum.
(3) The defrosting period is 12 minutes maximum.
(4) When operation is stopped during defrosting, it is switched to auto refresh defrosting.
(5) Auto refresh defrosting cannot be engaged within 15 minutes after operation is started or defrosting is finished.

Setting Defrosting Inhibit Period

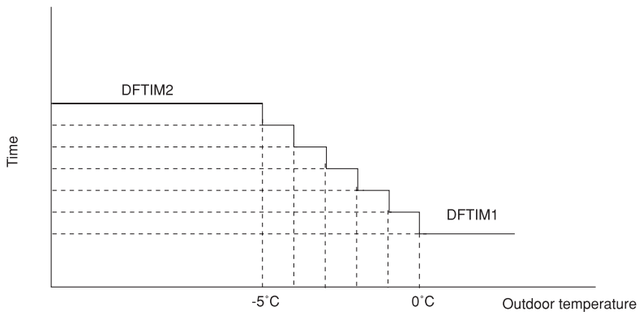

Notes:

(1) The time is set according to the outdoor temperature when it is between 0˚C and -5˚C.
(2) DFTIM1 is used when the outdoor temperature ≧ 0˚C.
(3) DFTIM2 is used when the outdoor temperature ≦ -5˚C.

Heating Sleep Operation

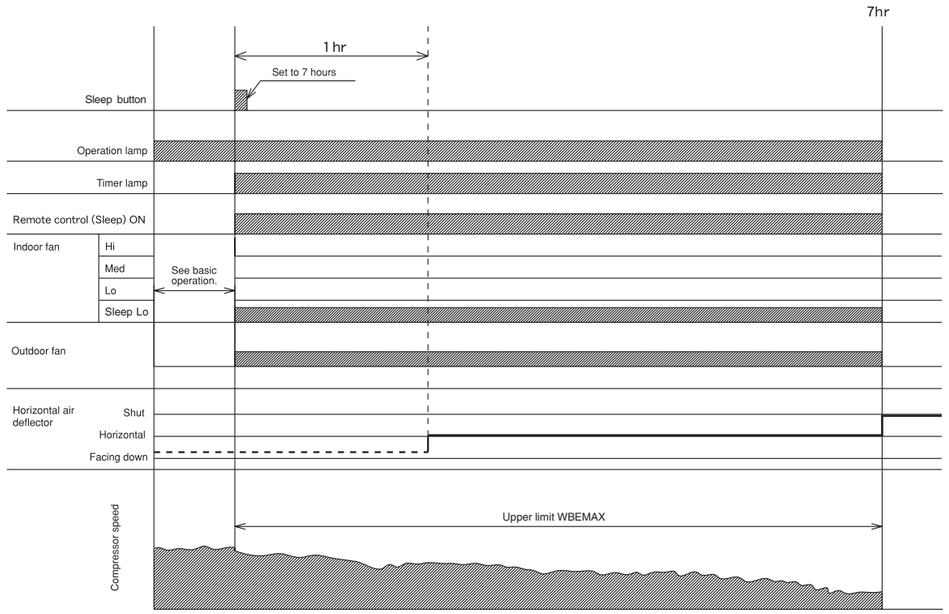

Notes:

(1) The sleep operation starts when the sleep button is pressed.
(2) When the sleep button is set, the maximum compressor speed is limited to WBEMAX, and the indoor fan is set to "sleep Lo".
(3) The indoor fan speed does not change even when the fan speed mode is changed. (Sleep Lo)
(4) When defrosting is to be set during sleep oepration, defrosting is engaged and sleep operation is restored after defrosting.
(5) If sleep operation is cancelled by the cancel button or sleep button, all data is cleared.

REFRIGERATING CYCLE DIAGRAM

MODEL RAS-14EH1 / RAC-14EH1

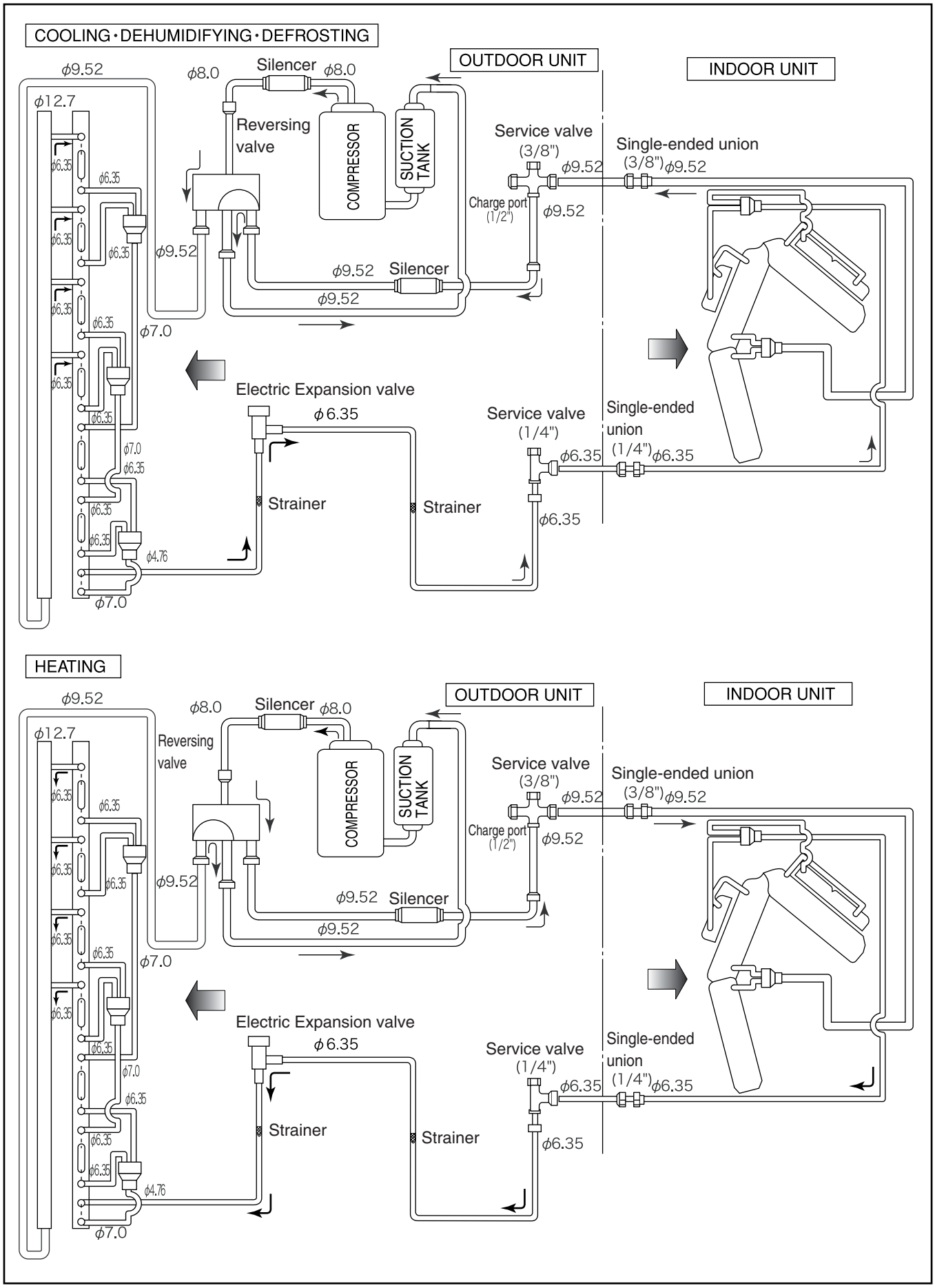

DESCRIPTION OF MAIN CIRCUIT OPERATION

MODEL RAS-14EH1

1. Reset Circuit

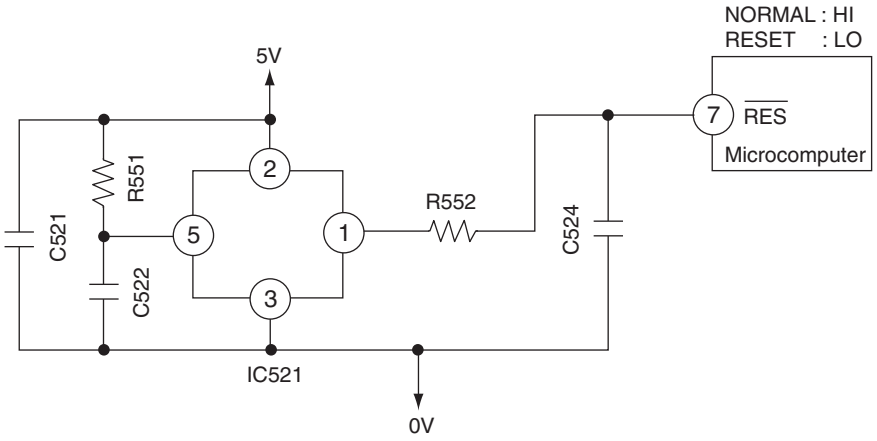

Fig. 1-1

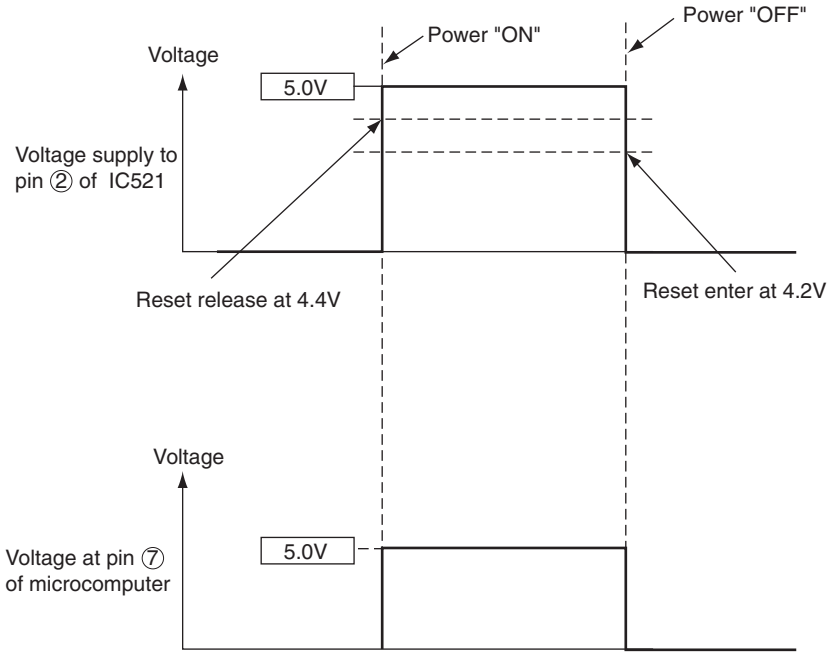

Fig. 1-2

The reset circuit initializes the microcomputer program when power is ON or OFF.
Low voltage at pin ⑦ resets the microcomputer and Hi activates the microcomputer.
When power "ON" 5V voltage rises and reaches 4.4V, pin ① of IC521 is set to "Hi". At this time the microcomputer starts operation.
When power "OFF" voltage drops and reaches 4.2V, pin ① of IC521 is set to "Low". This will RESET the microcomputer.

2. Receiver Circuit

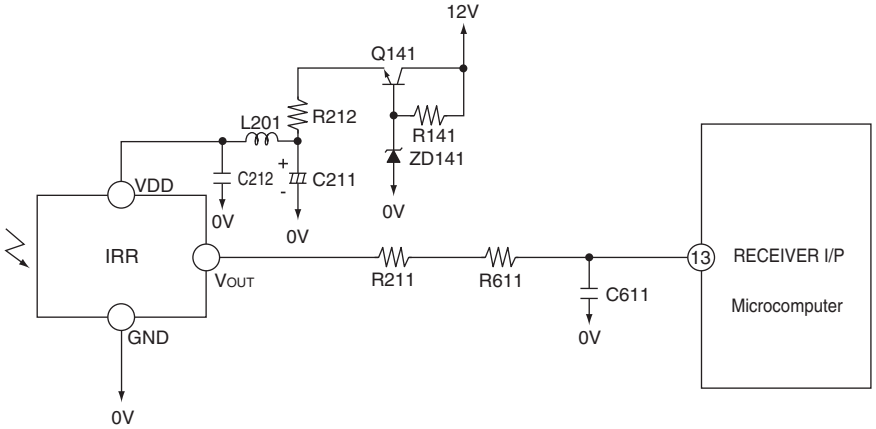

Fig.2-1

IRR (light receiver unit) receives the infrared signal from the wireless remote controller. The receiver amplifies and shapes the signal and outputs it.

3. Buzzer Circuit

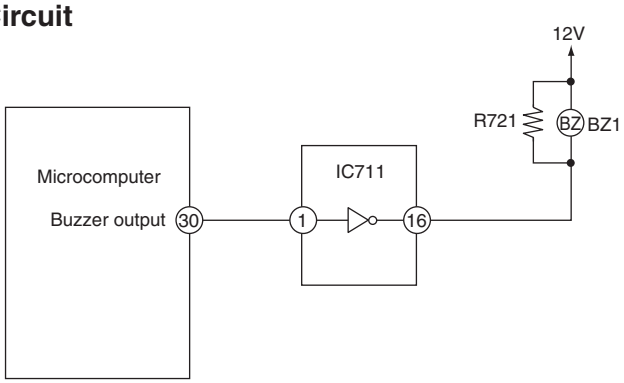

Fig.3-1 Buzzer circuit

When the buzzer sounds, an approx 3.9kHz square signal is output from buzzer output pin ㉚ of the microcomputer. After the amplitude of this signal has been set to 12Vp-p by IC711, it is applied to the buzzer. The piezoelectric element in the buzzer oscillates to generate the buzzer's sound.

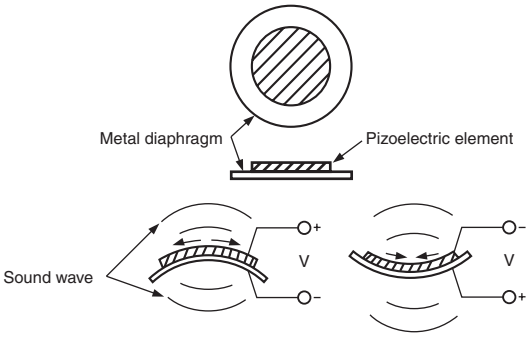

Fig. 3-2 Buzzer Operation

4. Auto Sweep Motor Circuit

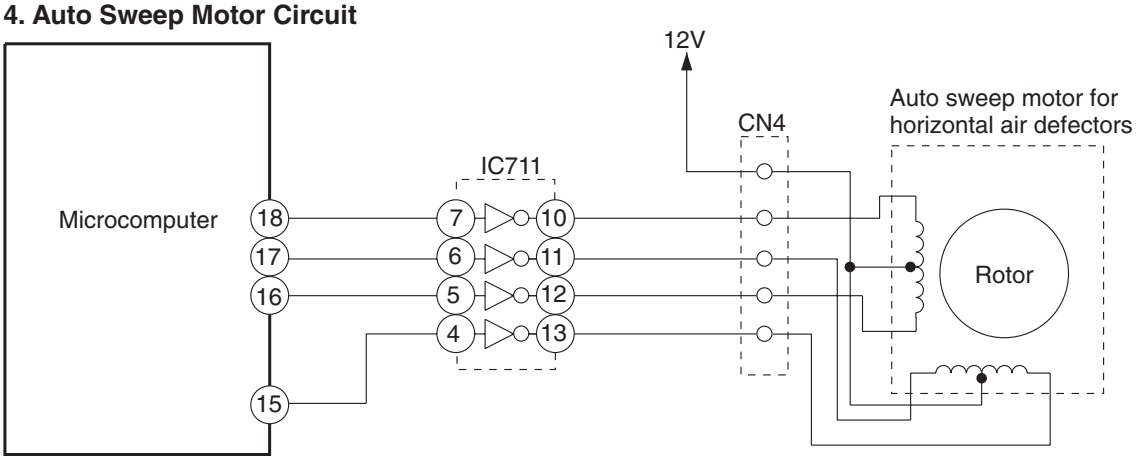

Fig.4-1

Fig. 4-1 shows the Auto sweep motor drive circuit; the signals shown in Fig.4-2 are output from pin ⑮~⑱ of microcomputer.

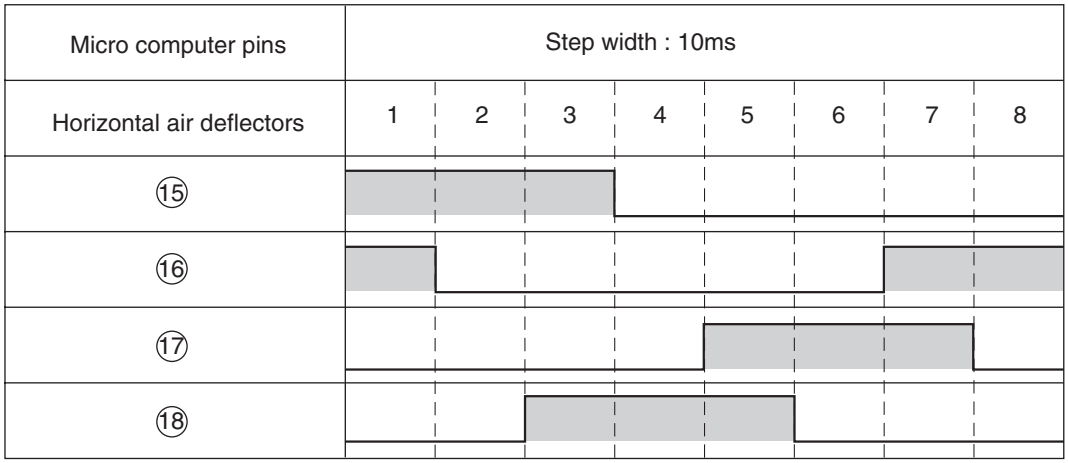

Fig.4-2 Microcomputer Output Signals

As the microcomputer's outputs change as shown in Fig.4-2, the coils of the auto sweep motor is excite to turn the rotor. Table 4-1 shows the rotation angle of horizontal air deflectors.

Table 4-1 Auto sweep Motor Rotation

	Rotation angle per step (°)	Time per step (ms.)
Horizontal air deflectors	0.0882	10

5. Initial Setting Circuit (IC401)

- When power is supplied, the microcomputer reads the data in IC401 or IC402 (E^2PROM) and sets the preheating activation value and the rating and maximum speed of the compressor, etc. to their initial values.
- Data of self-diagnosis mode is stored in IC401 or IC402; data will not be erased even when power is turned off.

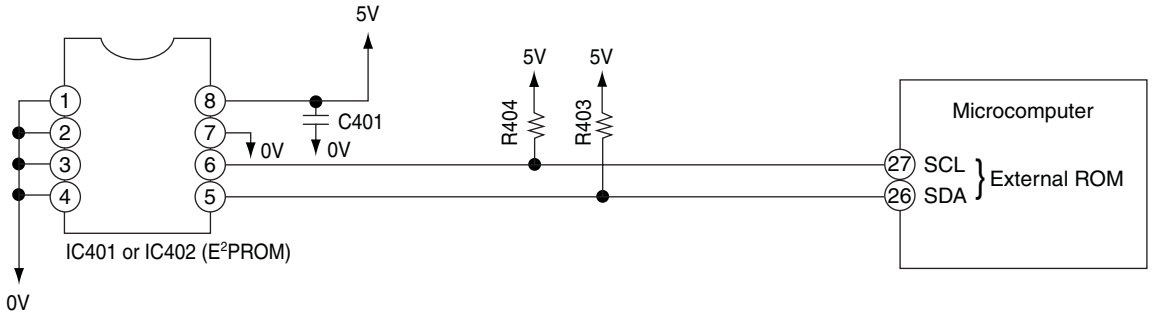

Fig. 5-1

6. Power Supply

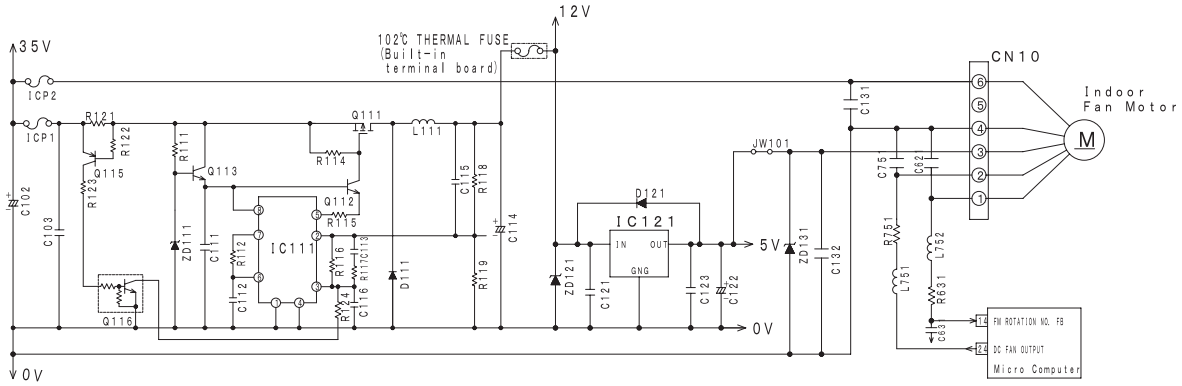

Fig. 6-1

First, 35V power which operates the indoor unit is generated by the power source section of the outdoor unit and supplied to the indoor unit through the C and D lines of the connecting cable.
Second, use the DC/DC converter and the 35 V power supply from the outdoor unit to generate 12 V control power, which drives the stepping motor during the operation.
In addition, use the regulator IC 121 to generate 5 V power required for driving the micro computer and controlling fan motor.
If the terminal block was overheated due to a connecting cable improper connection, the thermal fuse built in the terminal block will burnt to shut off the 12 V line and stop the operation of the indoor unit. Then, the outdoor unit cannot be communicated with the indoor unit and a communication error occurs (the outdoor LD301 will blink 9 times), stop all operations.

7. Fan Motor Drive Circuit

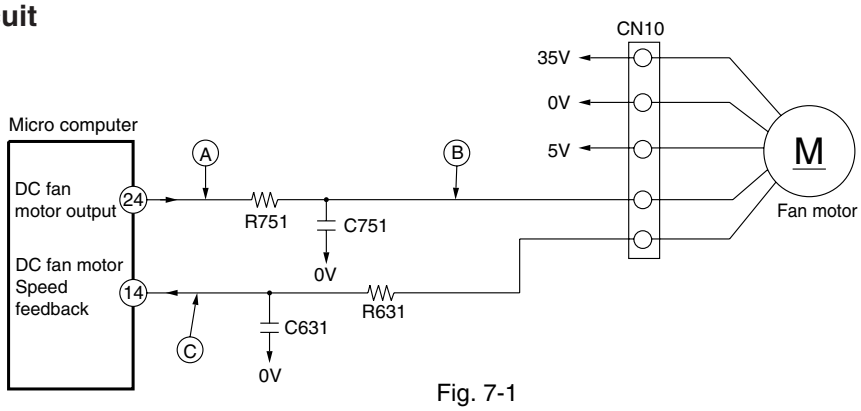

Fig. 7-1

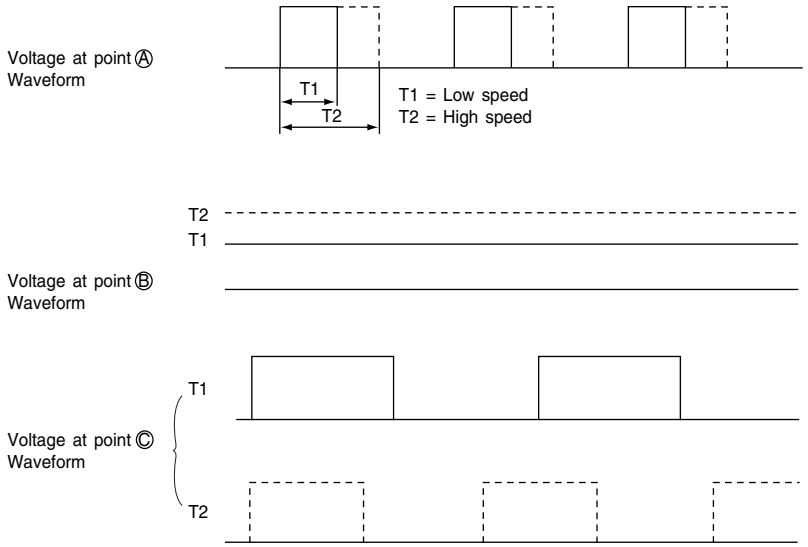

Fig. 7-2

- For the point Ⓐ, 15.7 kHz PWM pulse will be output from the pin ㉔ on the micro computer as shown in Fig. 7-2. The pulse range will vary with different command speed.
- The pulse is converted into the analog voltage by the R751 and C751 and applied to the fan motor as the speed command voltage.
  Fig. 7-3 shows the relation between the voltage at the point Ⓑ and the speed. (Some differences will occur due to the condition of the unit.)
- The fan motor outputs the feedback pulse of the speed, which is input into the pin ⑭ on the micro computer. This pulse is equivalent to a frequency of 12/60 speed. (Example: 1000 min-1 x 12/60 = 200 Hz)
  The micro computer monitors the frequency and adjusts the output pulse range of the pin ㉔ so as to keep the command speed.

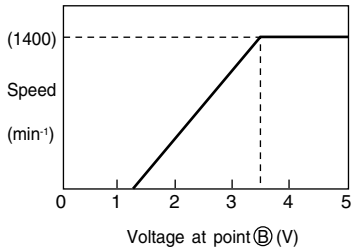

Fig. 7-3

- If the feedback pulse is 100 min-1 or less due to a locked fan motor or failure, the fan output will be stopped temporarily as fan lock error. After 10 seconds, restart the output of the pulse. If fan lock error is detected twice within 30 minutes, all units are stopped and the unit will come in the failure mode. (The timer lamp will blink 10 times.)

MODEL RAC-14EH1

1. The electrical parts for the outdoor unit is composed of two P.W.B. (a power P.W.B. and main P.W.B.) and a harmonics improvement circuit as shown in Fig. 1-1.

- Main P.W.B.
  This P.W.B. is equipped with the rectification diode, DC fan motor control circuit and the circuits around the micro computer which take various controls.

- POWER P.W.B.
  This P.W.B. is equipped with the noise filter, ICP power circuit, interface circuit, smoothing capacitor, expansion valve control circuit and four-way valve control circuit.

- HARMONICS IMPROVEMENT CIRCUIT
  This circuit is composed of the capacitor at the bottom of the electrical parts box and two reactors attached to the BULKHEAD.

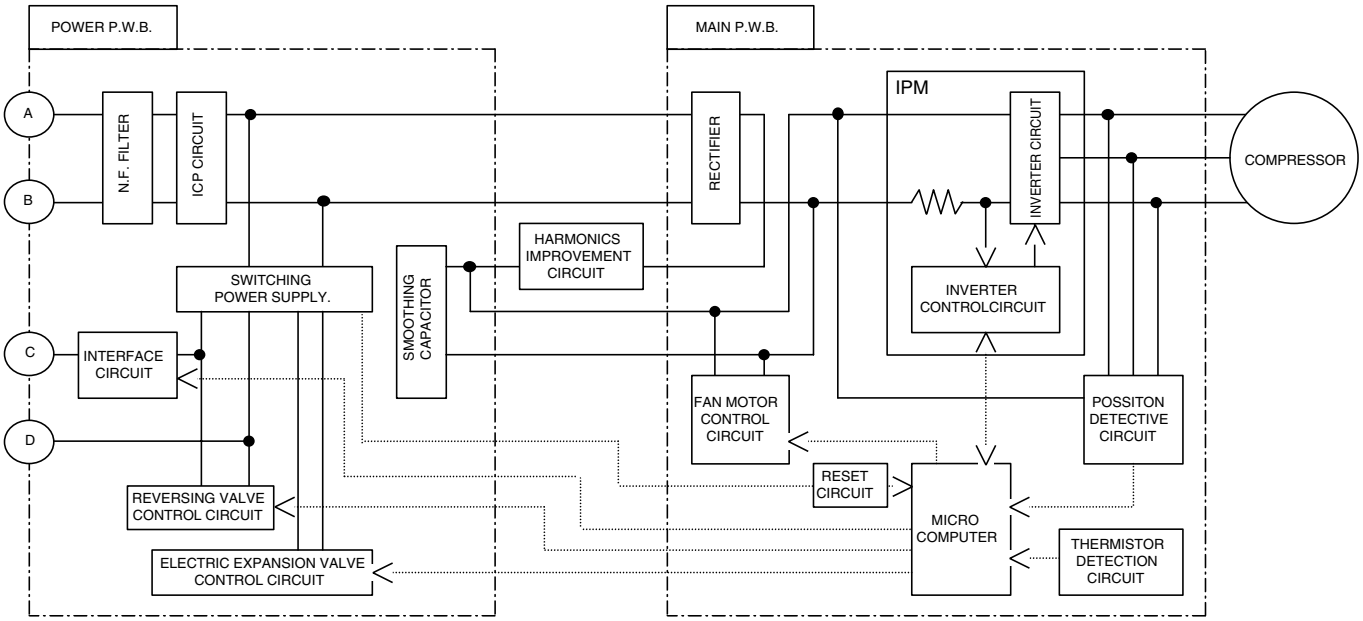

Fig. 1-1

2. Power circuit

This circuit is to convert the power from AC which is provided from the terminal A and B to DC voltage. And produces an AC current which does not exceed the harmonic amplitude limit of the IEC61000-3-2. When the compressor is stopped, the AC voltage becomes about 300 V and while the compressor operates, it is about 280 V.

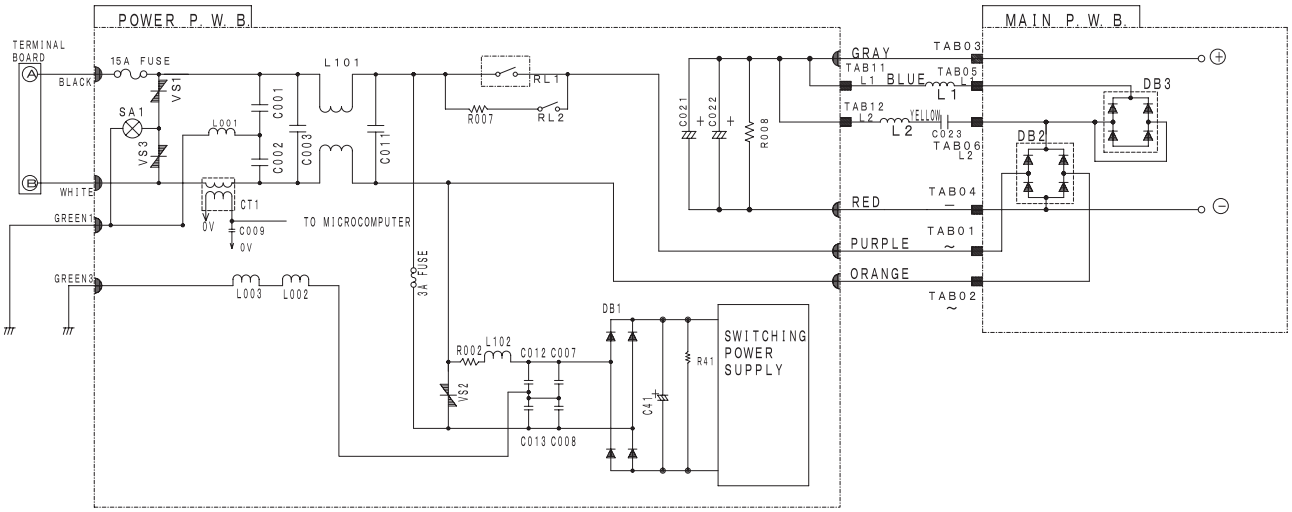

Fig. 2-1

Main parts

(1) DB2

The DB2 rectifies the AC voltage.

The possible causes for the DB2 failure are as follows. The 15 A fuse may be blown out or the IPM for the main P.W.B. may have a failure. In such a case, check the 15 A fuse for blowout and replace the main P.W.B. if necessary.

(2) DB3, L1, C023 and L2

The DB3, L1, C023 and L2 shape waveform of the input current.

When the current runs through the L1 is taken for I1 and the current runs through the L2 is taken for I2 as shown in Fig. 2-2, I1 becomes an input current to the capacitor which peak value was crushed by the L1 and I2 becomes a resonance current which causes the LC resonance using the L2 and C023. By combining the I1 and I2, the input current from the main power shapes a waveform shown in the right side of Fig. 2-3, indicating that the waveform is similar to sine wave. The more the waveform is similar to the sine wave, the lower the harmonic current becomes.

If the C023 has any failure, the protection unit activates and the C023 in open mode. In such a case, replace the failed parts.

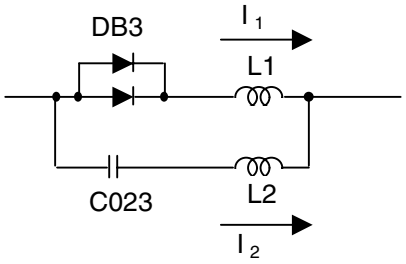

Fig. 2-2

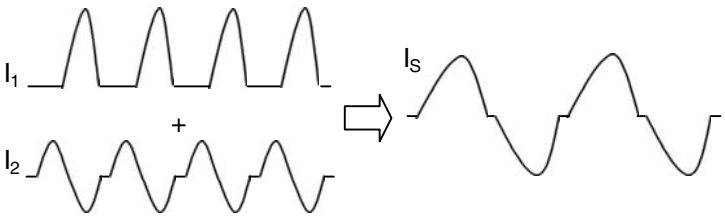

Fig. 2-3

(3) C021 and C022
This smoothes the voltage rectified for operating the compressor.
When the input voltage is taken for the sine wave as shown in the top of Fig. 2-4, it is rectified by the DB2 and becomes the waveform as shown in the middle of Fig. 2-4. After that, the voltage is smoothed by the C021 and C022, and becomes the waveform shown in the bottom of Fig. 2-4.

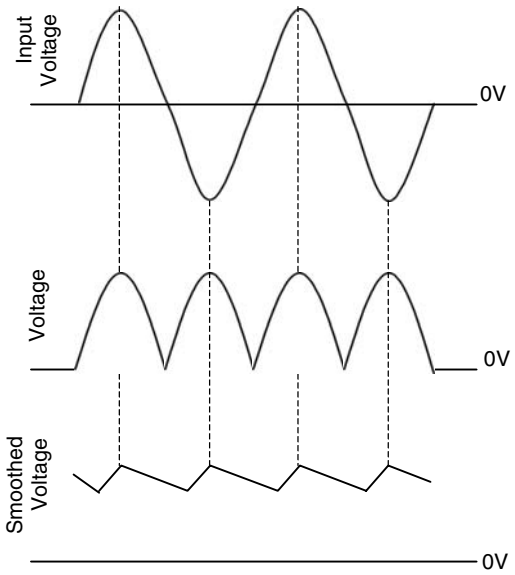

Fig. 2-4

(4) DB1 and C41
The DB1 rectifies the input voltage and the C41 smoothes it for the control power supply.
If the units above have any failure, the control power supply won't operate. In such a case, replace the power P.W.B.

(5) C001 to C003, C011, L101, and L102
They absorb electrical noise generated during operation of compressor, and also absorb external noise entering from power line to protect electronic parts.
Be sure to connect the earth cable between the indoor unit and the outdoor unit. Otherwise, the noise filter circuit won't operate properly.

(6) SA1 and VS1 to VS3
These surge absorber and varistors absorb external power surge such as induced thunder.
Be sure to connect the earth cable between the indoor unit and the outdoor unit. Otherwise, the surge absorber and the varistors won't operate.

(7) R002 and R007
The resistor R002 protects the rush current when the power is turned on while the resistor R007 protects the rush current when the compressor starts.
When the R002 has any failure, the control power supply won't operate. When the R007 has any failure and a strong rush current is generated, the DB2, C021 or C022 may be damaged.

3. Indoor/Outdoor Interface Circuit

The interface circuit superimposes an interface signal on the DC 35V line to perform communications between indoor and outdoor units. This circuit consists of a transmitting circuit which superimposes an interface signal transmit from the microcomputer on the DC 35V line and a circuit which detects the interface signal on the DC 35V line.
Communications are performed alternatively transmitting and receiving.

3-1 Communication signal from outdoor microcomputer to indoor microcomputer.

At first outdoor microcomputer will send a request signal (SDO) to indoor microcomputer.
38 KHz of carrier signal is generated and modulated by the request signal (SDO) from the outdoor microcomputer pin ⑪.
This signal is superimposed to DC 35V line via C801 and L801.
To prevent erroneous reception, the outdoor microcomputer is designed so that it cannot receive a signal while it is outputting a request signal.
The receiving circuit in the indoor unit consists of a comparator and transistor. The interface signal from the outdoor unit on the DC 35V line is supplied to C821, where DC components are eliminated, and is then shaped by the comparator. The shaped signal is detected by diode, amplified by amp, and output to pin ㊾ of the indoor microcomputer.
Fig. 3-2 shows the waveforms at each component when data is transferred from the outdoor microcomputer to the indoor microcomputer.

3-2 Communication signal from indoor microcomputer to outdoor microcomputer.

The request signal (SDO) generates by indoor microcomputer is output to pin ㊿ , and amplifies by Q801.
I/F signal approx. 38 kHz is generated by comparator, then modulated by the signal from pin ㊿ of indoor microprocessor.
This modulated I/F signal is then amplified and superimposed to DC 35V line via L801 and C802 of indoor interface circuit.
Fig. 3-3 shows the waveforms at each component when data is transferred from outdoor microcomputer to indoor microcomputer.
The circuit operation of the outdoor receiving circuit is same as indoor receiving circuit.

Fig. 3-1 shows the interface circuit used for the indoor and outdoor microcomputers to communicate with each other.

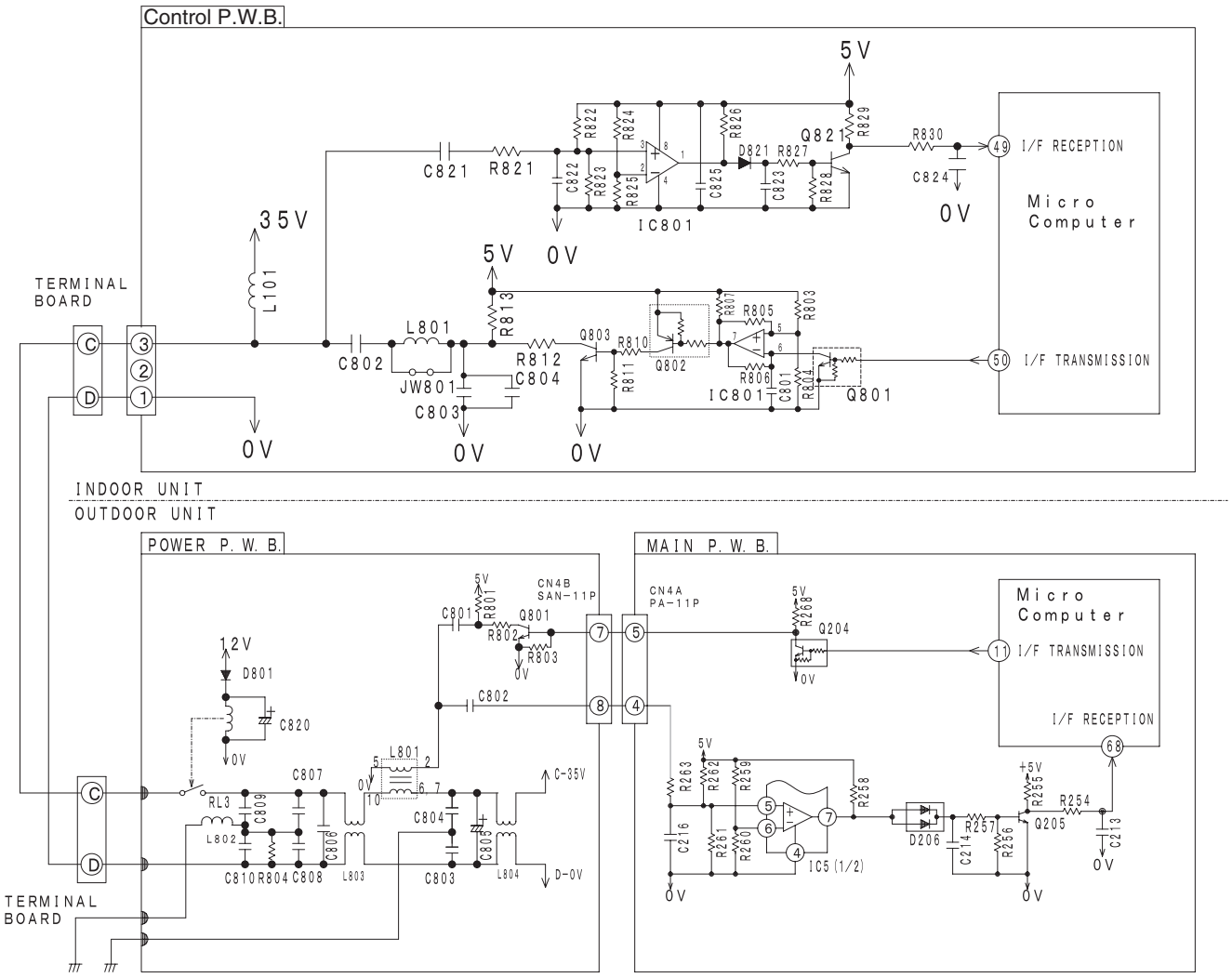

Fig. 3-1

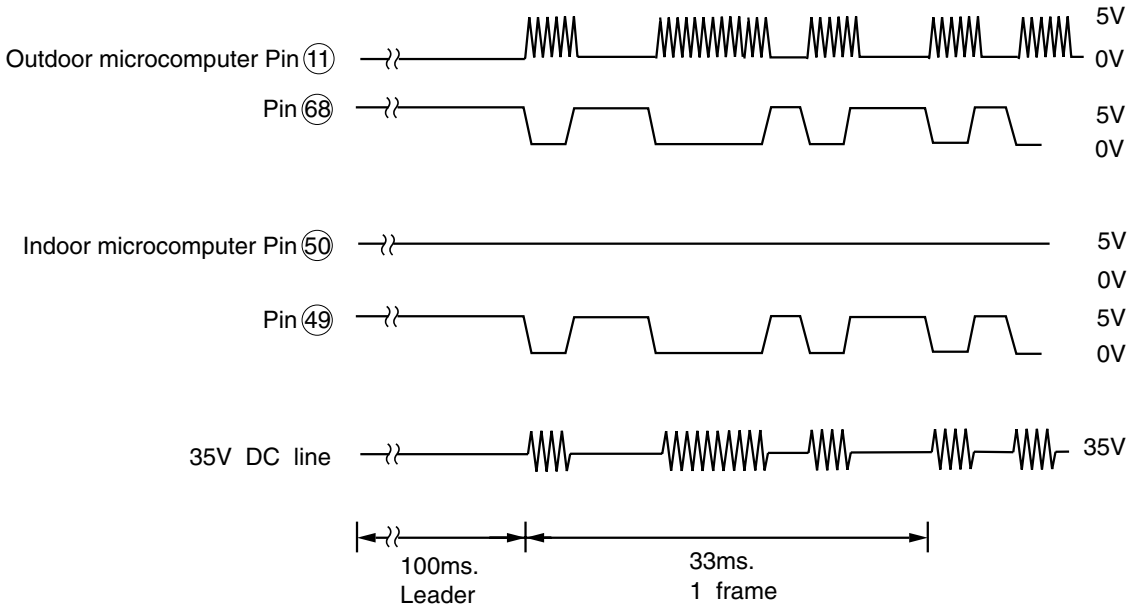

Fig. 3-2 Voltages Waveforms of Indoor / Outdoor Microcomputers (Outdoor to Indoor Communications)

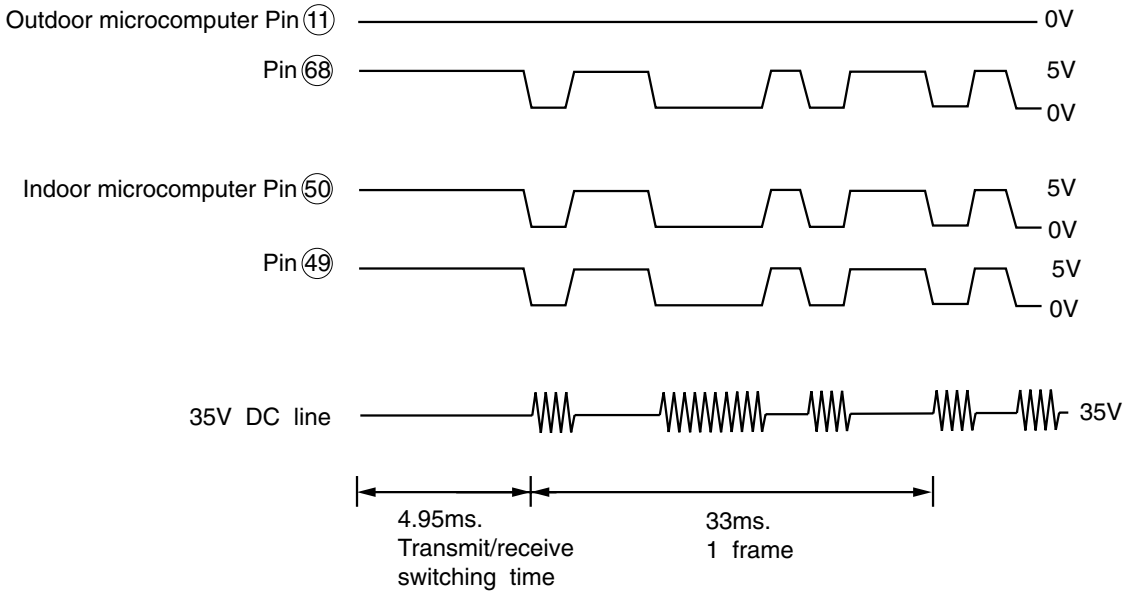

Fig. 3-3 Voltages Waveforms of Indoor / Outdoor Microcomputers (Indoor to Outdoor Communications)

[Serial Communications Format during Normal Communications]

(1)Outdoor microcomputer (HIC) to indoor microcomputer

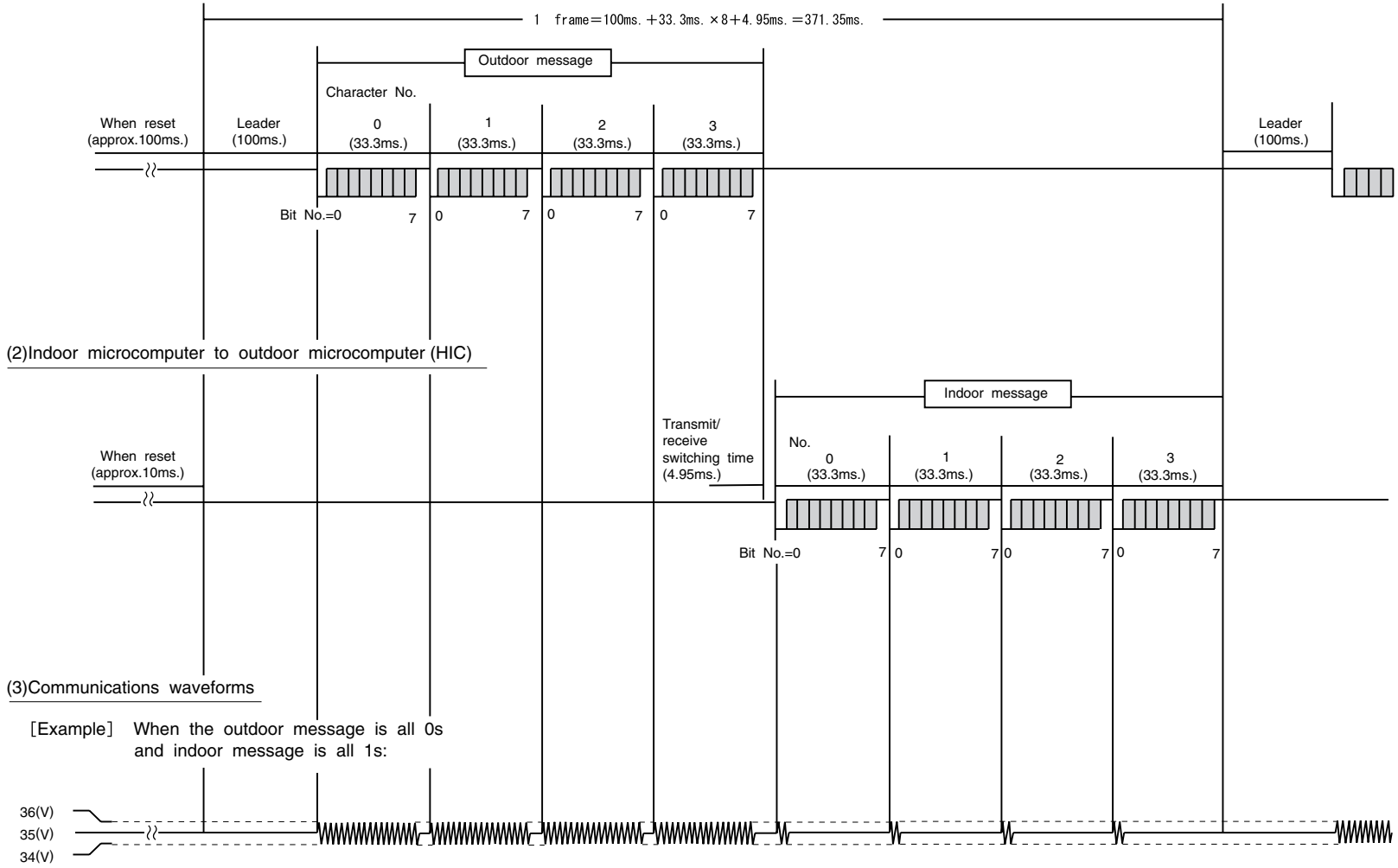

Fig. 3-4

［Serial Communications Data］

(1)Outdoor message

Character No.	0								1								2								3							
Bit No.	0	1	2	3	4	5	6	7	0	1	2	3	4	5	6	7	0	1	2	3	4	5	6	7	0	1	2	3	4	5	6	7
Contents	Multi-bit		During forced operation	Defrost request signal	Self-diagnosis(0 LSB)	Self-diagnosis(1)	Self-diagnosis(2)	Self-diagnosis(3 MSB)	Outside temperature(0 LSB)	Outside temperature(1)	Outside temperature(2)	Outside temperature(3)	Outside temperature(4)	Outside temperature(5)	Outside temperature(6)	Outside temperature(7 MSB)	Compressor during operation	Compressor during operation	Actual compressor rotation speed(0 LSB)	Actual compressor rotation speed(1)	Actual compressor rotation speed(2)	Actual compressor rotation speed(3)	Actual compressor rotation speed(4)	Actual compressor rotation speed(5 MSB)		Fan-7-step request						
Data	1/0	0	1/0	1/0	1/0	1/0	1/0	1/0	1/0	1/0	1/0	1/0	1/0	1/0	1/0	1/0	1/0	1/0	1/0	1/0	1/0	1/0	1/0	1/0	0	1	0	0	0	0	0	0

(2)Indoor message

Character No.	0								1								2								3							
Bit No.	0	1	2	3	4	5	6	7	0	1	2	3	4	5	6	7	0	1	2	3	4	5	6	7	0	1	2	3	4	5	6	7
Contents	Operation mode(0 LSB)	Operation mode(1)	Operation mode(2 MSB)	Indoor in-operation bit	Capacity code(0 LSB)	Capacity code(1)	Capacity code(2)	Capacity code(3 MSB)	Fan(0 LSB)	Fan(1)	Fan(2 MSB)	2-way valve	Reversing valve			Compressor ON	Compressor command speed(0 LSB)	Compressor command speed(1)	Compressor command speed(2)	Compressor command speed(3)	Compressor command speed(4)	Compressor command speed(5)	Compressor command speed(6)	Compressor command speed(7 MSB)	15/20(A)	OVL up		Compressor minimum rotation speed(0 LSB)	Compressor minimum rotation speed(1)	Compressor minimum rotation speed(2)	Compressor minimum rotation speed(3)	Compressor minimum rotation speed(4 MSB)
Data	1/0	1/0	1/0	1/0	0	0	0	0	1/0	1/0	1/0	0	1/0	0	0	1/0	1/0	1/0	1/0	1/0	1/0	1/0	1/0	1/0	1/0	1/0	1/0	1/0	1/0	1/0	1/0	1/0

4. IPM (Intelligent Power Module)

- Fig.4-1 shows the intelligent power module and its peripheral circuit.
  The three transistors on the positive Ⓔ side are called the upper arm, and the three transistors on the negative Ⓓ side, the lower arm.

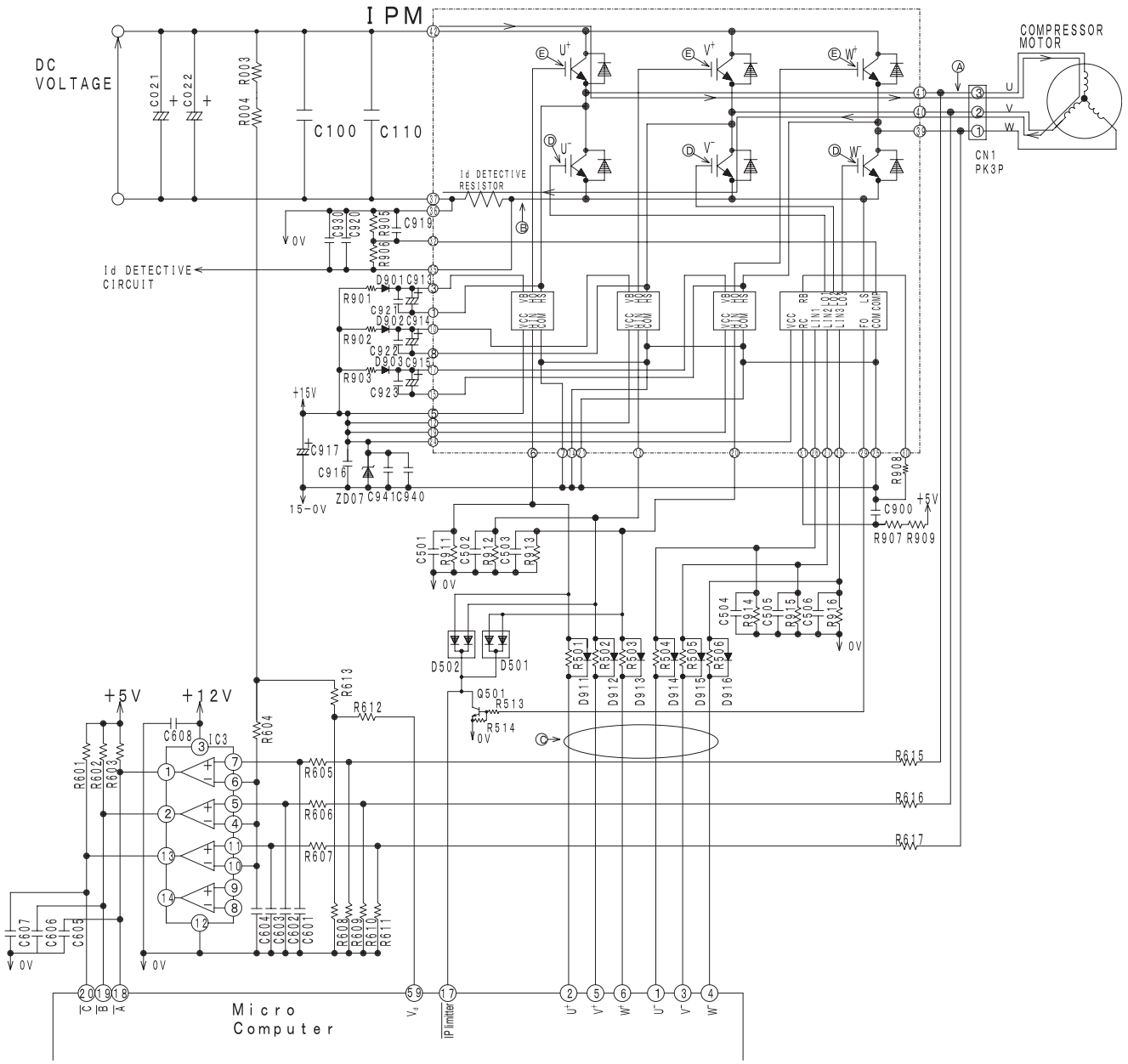

Fig. 4-1 Intelligent power module circuit (U^+ is ON, V^- is ON)

Intelligent power module switches power supply current according to position of the compressor motor rotor.
The switching order is as shown in Fig. 4-2.

At point Ⓔ: U^+ is ON, V^- is ON (circuit in Fig. 4-1)
At point Ⓕ: U^+ is chopped (OFF), V^- is ON (circuit in Fig. 4-4)

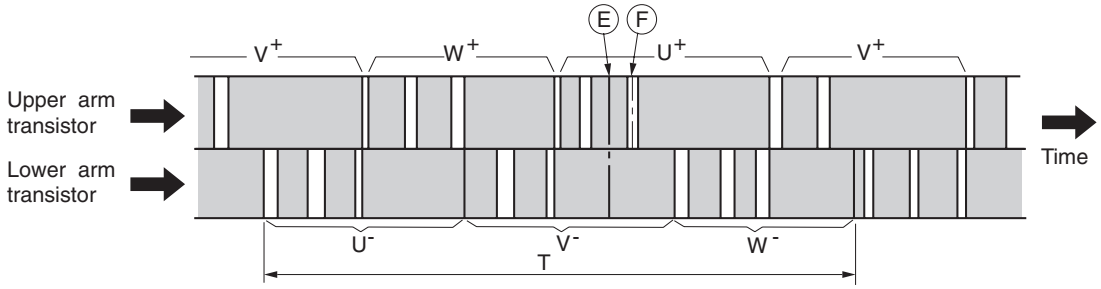

Fig. 4-2 Switching order of power module

Upper arm transistor is controlled to ON/OFF by 4.8kHz chopper signal. Rotation speed of the compressor is proportional to duty ratio (ON time/ ON time + OFF time) of this chopper signal.
Time T in Fig. 4-2 shows the switching period, and relation with rotation speed (N) of the compressor is shown by formula below;

$$N = 60/2 \times 1/T$$

Fig. 4-3 shows voltage waveform at each point shown in Figs. 4-1 and 4-4. First half of upper arm is chopper, second half is ON, and first half of lower arm is chopper, second half is ON.

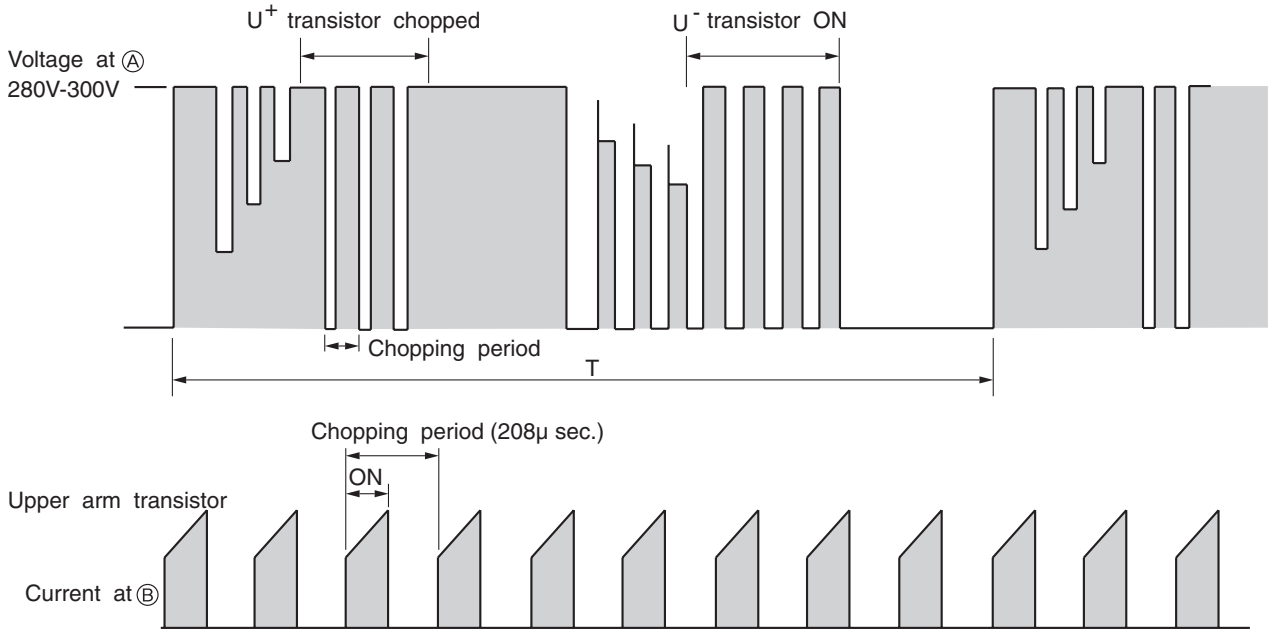

Fig. 4-3 Voltage waveform at each point

When power is supplied $U^+ \rightarrow V^-$, because of that U^+ is chopped, current flows as shown below;

(1) When U^+ transistor is ON: U^+ transistor → U coil → V coil → V^- transistor → DC current detection resistor → Point Ⓑ (Fig. 4-1)

(2) When U^+ transistor is OFF: (by inductance of motor coil) U coil → V coil → V^- transistor → U^- diode → Point Ⓐ (Fig. 4-4)

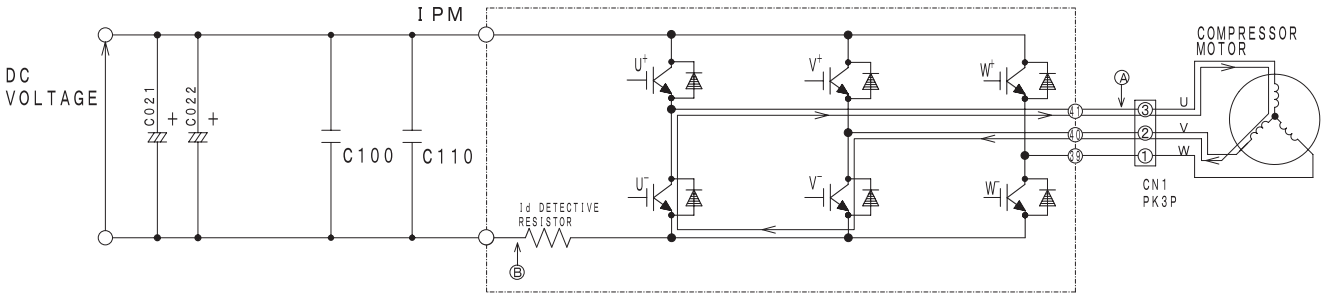

Fig. 4-4 Power module circuit (U^+ is OFF, V^- is ON)

Since current flows at point Ⓑ only when U^+ transistor and V^- transistor are ON, the current waveform at point Ⓑ becomes intermittent waveform as shown in Fig. 4-3. Since current at point Ⓑ is approximately proportional to the input current of the air conditioner, input current is controlled by using DC current (Id) detection resistor.

<Reference>
If power module is defected, self diagnosis lamps on the MAIN P.W.B. may indicate as shown below:

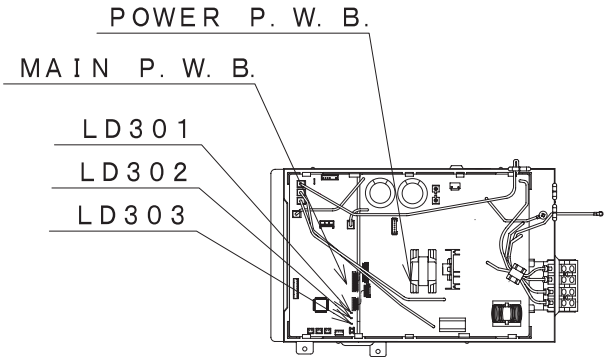

Fig. 4-5

Table 4-1

Self-diagnosis	Self-diagnosis lamp and mode	
Ip (peak current cut)	LD301	Blinks 2 times
Abnormal low speed rotation	LD301	Blinks 3 times
Switching incomplete	LD301	Blinks 4 times

- IPM drive circuit
  The inverter driving device (IGBT) and the drive circuit are built in the IPM. The IPM receives the signal from the microcomputer and convert it to 0 – 15 V signal to drive the IGBT.
  When the unit operates at low speed, a chopper signal is emitted from the micro computer as shown in Fig. 4-6. (0 to 5 V)
  The signal is converted to 0 – 15 V at inside the IPM and transmitted to the gate of the transistor (IGBT) in each phase to drive the IGBT.
  When abnormal peak current was detected while the inverter is driving, the IPM outputs the Fail signal immediately from the pin ㉙ and forces the lower arm transistor to shut off at the same time. In this step, the Q501 is turned on and the input signal of the upper arm is also shut off through the D501 and D502, so that all signals to the IGBT are shut off. This signal is also distributed to microcomputer (pin ⑰) as a Lo signal to stop the drive signal and blink the self diagnosis lamp as two time.
  When the peak current is detected, the IPM keeps the lower arm off for about 4mS and the drive signal into stand-by state. 3 minutes after this state, the micro computer outputs the drive signal and restarts the operation.

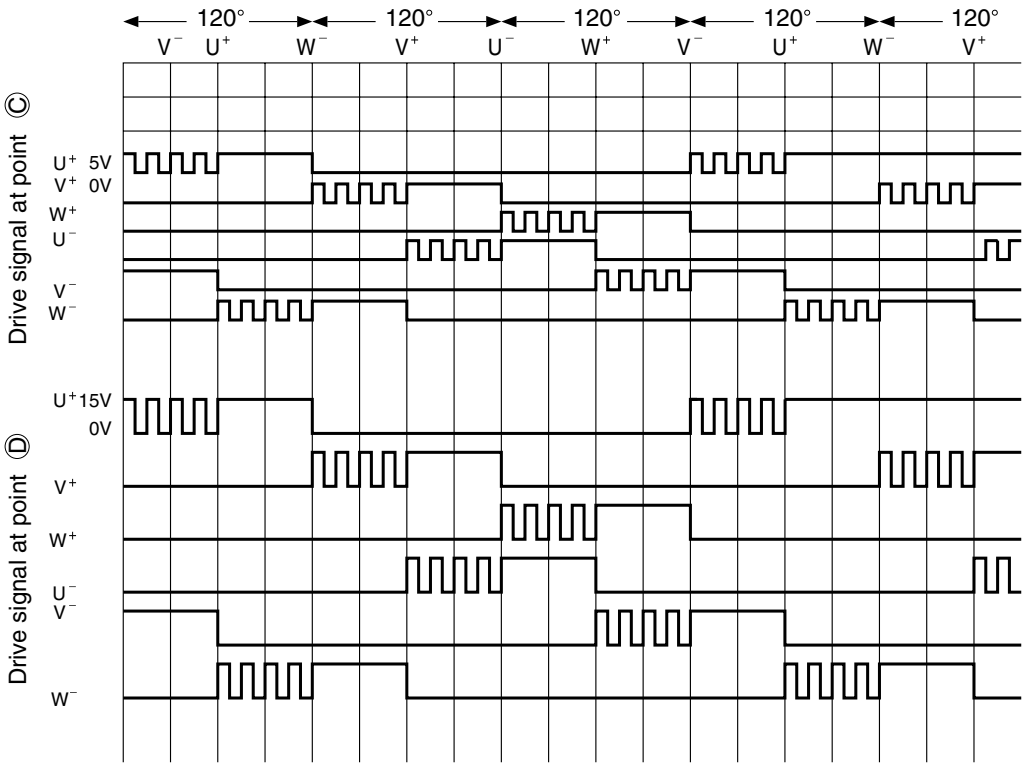

Fig. 4-6

5. Power Circuit for P.W.B.

- Fig. 5-1 shows the power circuit for P.W.B.

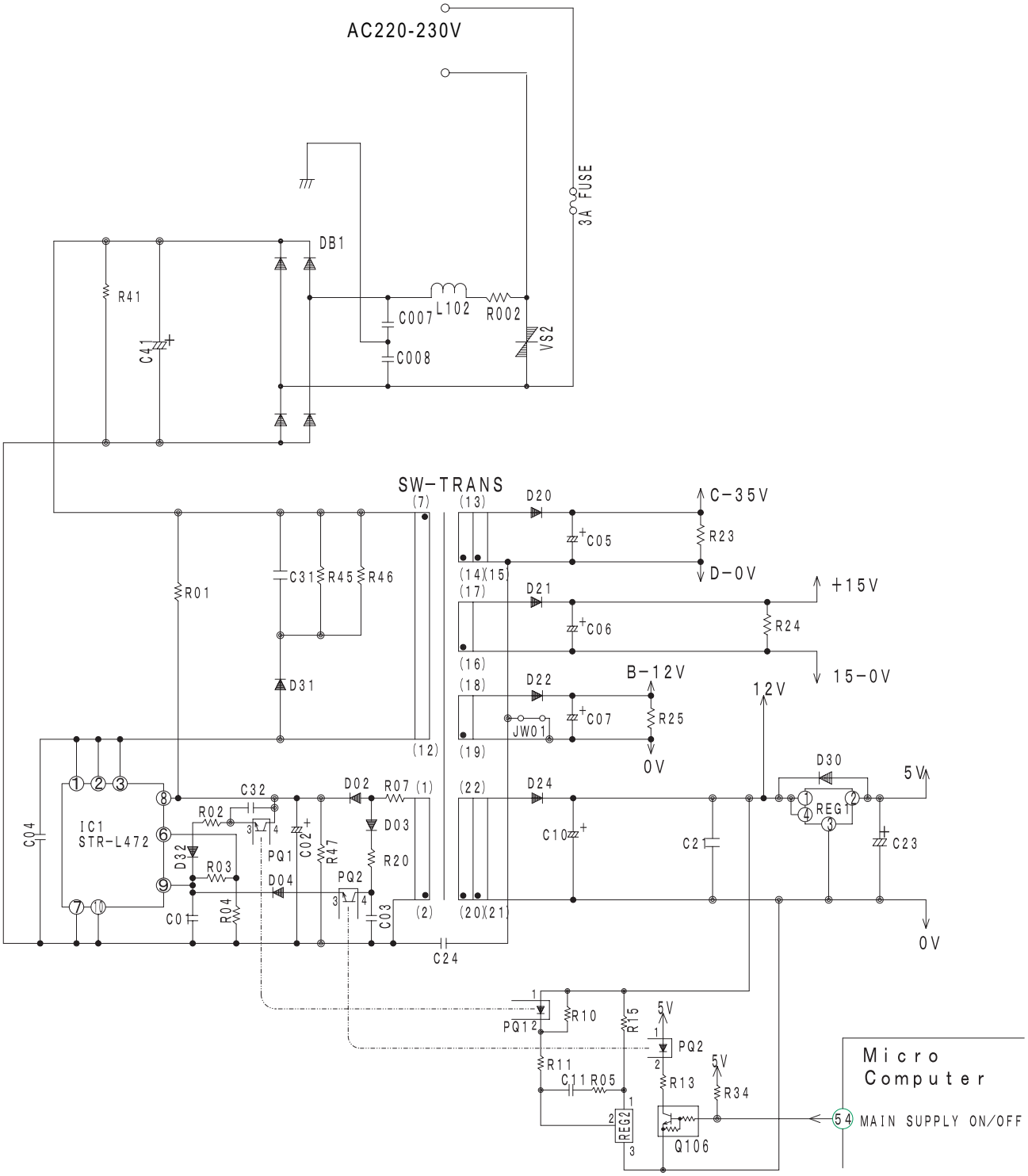

- In the power circuit for P.W.B., power supply for microcomputer, peripheral circuits, and IPM driver circuit and, as well as DC 35V, are produced by switching power circuit.
- Switching power circuit performs voltage conversion effectively by switching transistor IC1 to convert DC 330V voltage to high frequency of about 20kHz to 200kHz.

- The voltage specification of the power circuit is as follows.

<Check points>

Output	Voltage spec.	Main load	Measuring points		Potential failure modes
			+	–	
12V	11-13V	MAIN P.W.B. (CN3, CN4)	R701 (“12V” display) C21 (“12V” display)	R006 (“0V” display) J27, J30	The unit won’t operate MAIN P.W.B. error
5V	4.5-6V	MAIN P.W.B. (CN3, CN4)	D30 anode (“5V” display) J25	R006 (“0V” display) J27, J30	The unit won’t operate MAIN P.W.B. error
B-12V	11-16V	Expansion valve	R25 (“B-12V” display)	R25 (“B-0V” display)	LD301 blinks 5 times; Expansion valve error
15V	14-17V	DC fan motor (CN24) MAIN P.W.B. (CN3, CN4)	C06+ side	C06- side	LD301 blinks 3 times,
35V	33.5-38V	Indoor unit electrical parts (Terminal C,D) Reversing valve (CN2)	D20 cathode (“C-35V” display) Terminal C (blown line)	J5, J17 Terminal D (red line)	Indoor unit won’t operate

- Check each voltage. If each voltage meets the voltage specification above, the power circuit is normal.
- If any error is found after checking, remove all loads and recheck each voltage.
  If no error is found in this step, the power circuit is normal. Check the removed loads.
  If any error is found in this step, the power circuit has any failure. Replace the power P.W.B.
  ※ A short-circuited load may cause an output error not only in the load but also in the others. Be sure to check all outputs of the loads.
  ※ Be sure to wait 15 minutes or more in order to discharge all the remaining voltage in the circuit to connect/disconnect the wiring, otherwise, the components may be damaged.
- The failures of the loads are as follows.

Failed output	Possible causes	Criterion
35V	Reversed connection of the cable. Electrical part for the indoor unit has a failure. Short-circuited reversing valve	Connect the cable correctly. Remove the connection cable and measure the voltage. If the voltage is correct, check the electrical parts for the indoor unit. Remove the CN2 and measure the voltage. If the voltage is correct, check the reversing valve.
15V	DC fan motor error Main P.W.B. error	Remove the CN24 and measure the voltage. (connect the CN3.) If the voltage is correct, check the DC fan motor. Also, check the main P.W.B. 1 A fuse for blow out in this step. Remove the CN3 and CN4 and meaure the voltage. If the voltage is correct, check the main P.W.B.
12V, 5V	Main P.W.B. error	Remove the CN3 and CN4 and meaure the voltage. If the voltage is correct, check the main P.W.B.

6. Microcpomputer's Peripheral Circuits

6-1. Overload control circuit (OVL control circuit)

Overload control is to decrease the speed of the compressor and reduce the load when the load on the air conditioner increases to an overload state, in order to protect the compressor, electronic components and power breaker.

Overloads are judged by comparing the DC current level and set value.

Fig.6-1 shows the overload control system configuration and Fig. 6-4 is a characteristic diagram on overload judgement values. There are two types of control which has named IS OVL and ID OVL.

IS OVL is limiting the whole input of this room air conditioner system through the current sensor CT1 in order to keep the maximum rating of components by reading total operating current.

ID OVL is watching and limits the compressor current through the detection resistor, which is built in IPM in order to control the compressor reliability. Since the compressor reliability is related with its speed, the ID OVL value is also linked with the compressor speed. Fig. 6-2 shows an ID OVL limitation curve.

All of OVL operation values were programmed into EEPROM memory.

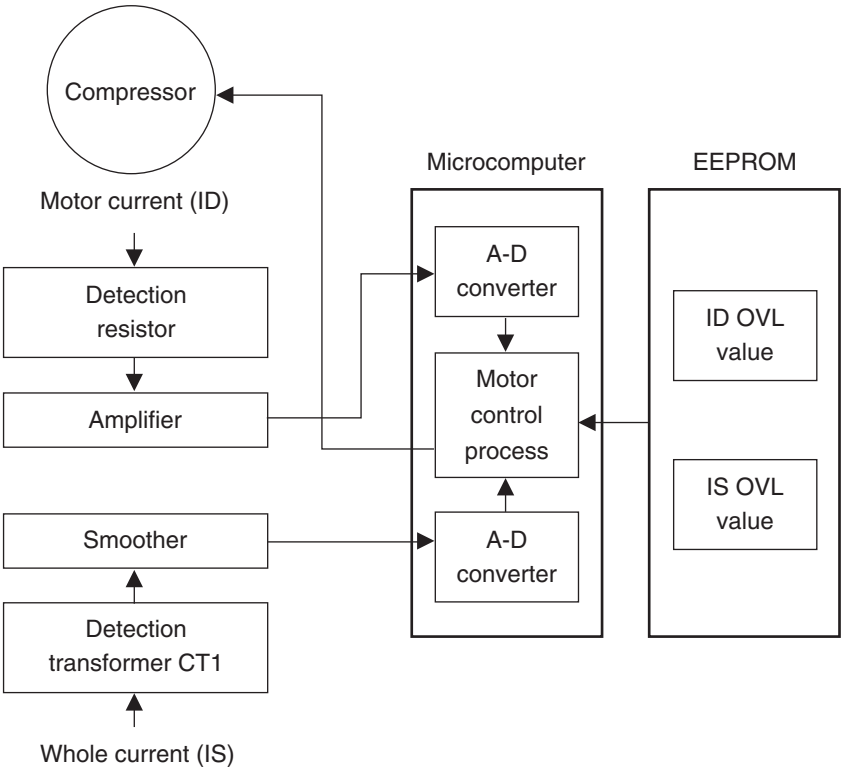

Fig. 6-1 Overload Control System

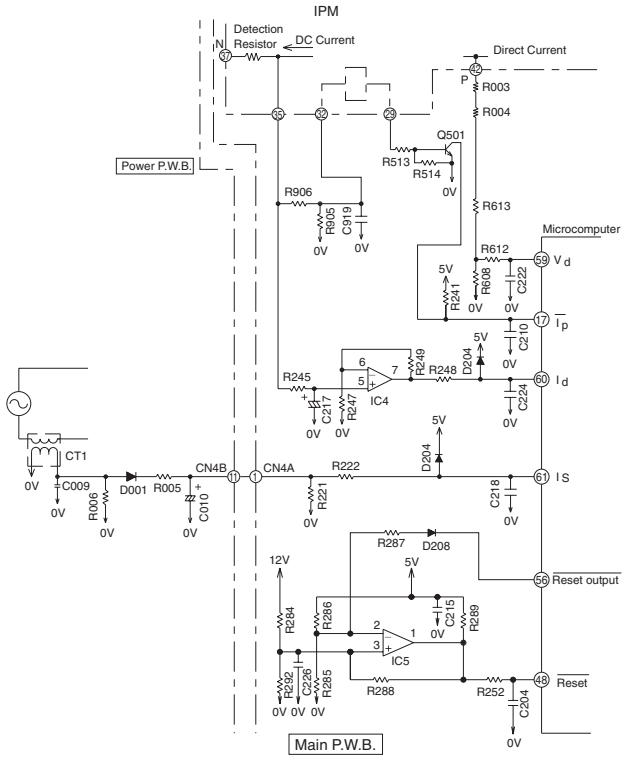

Fig. 6-2

(1) IS OVL

Current transformer CT1 reads the input flowing current and detected to the microcomputer as a voltage signal. Receiving this, the microcomputer converts it to a digital signal and compares it with the internal data to judge whether or not overload control is required.

Fig. 6-3 shows the rotation speed control. When the voltage at pin ⑥① of the microcomputer exceeds the set value, the microcomputer decreases the rotation speed of the compressor and reduces the load.

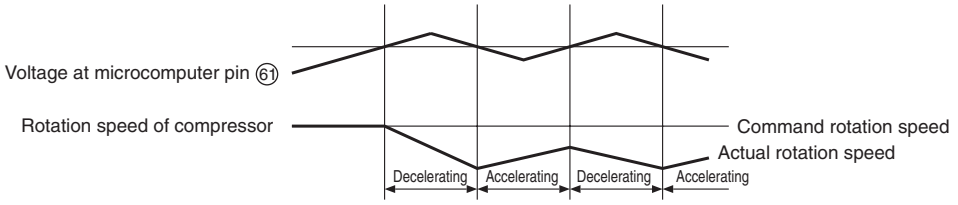

Fig. 6-3

(2) ID OVL

Fig. 6-2. The filter consisting of R245 and C217 removes high harmonic frequencies from the voltage generated by the current flowing to Detection resistor; R245 and C217 average the voltage. This voltage is then input to IC4 pin ⑤ and supplied to microcomputer pin ⑥⓪ . The microcomputer compares this input with the set value, and if the input exceeds the set value, it enters overload control status.

The set Value is determined by the amplification of the voltage amp. circuit

- Amplification : high → DC current : low
- Amplification : low → DC current: high

Fig. 6-4 shows the rotation speed control. When the voltage at pin ⑥⓪ of the microcomputer exceeds the set value, the microcomputer decreases the rotation speed of the compressor and reduces the load.

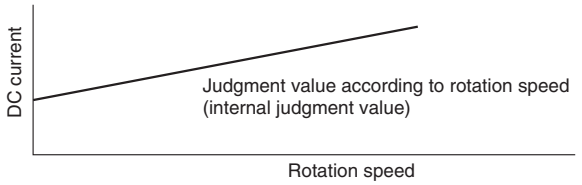

Fig. 6-4

R003,R004,R608,R613, detect the DC voltage at the power circuit. The microcomputer receives a DC voltage and applies correction to the overload set value so the DC current will be low when the DC voltage is high.
(Since the load level is indicated by the DC voltage multiplied by DC current, R247, R248, R249 are provided to perform the same overload judgement even when the voltage varies.)

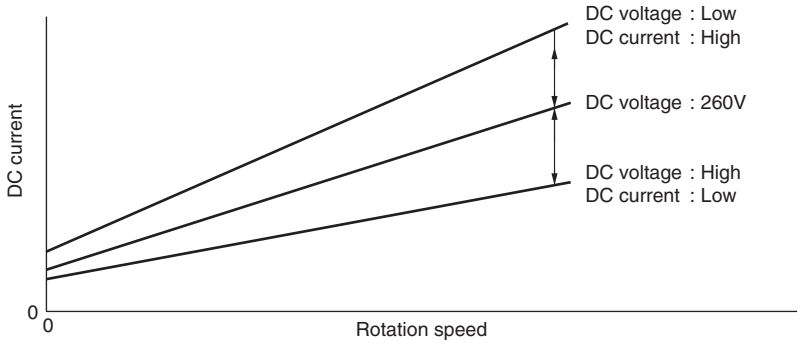

Fig. 6-5

(3) Start current control
It is required to maintain the start current (DC current) constant to smooth the start of the DC motor of the compressor.
RAC-14EH1 uses software to control the start current.
The start current varies when the supply voltage varies. This control method copes with variations in the voltages as follows.

1. Turns on the power module's U^+ and V^- transistors so the current flows to the motor windings as shown in Fig. 6-6.
2. Varies the turn-ON time of the U^+ transistor according to the DC voltage level and the start is controlled so the start current is approx. 10A .

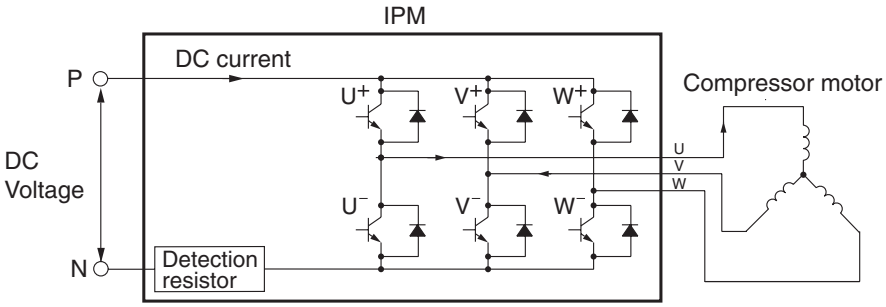

Fig. 6-6

6-2. Reset Circuit

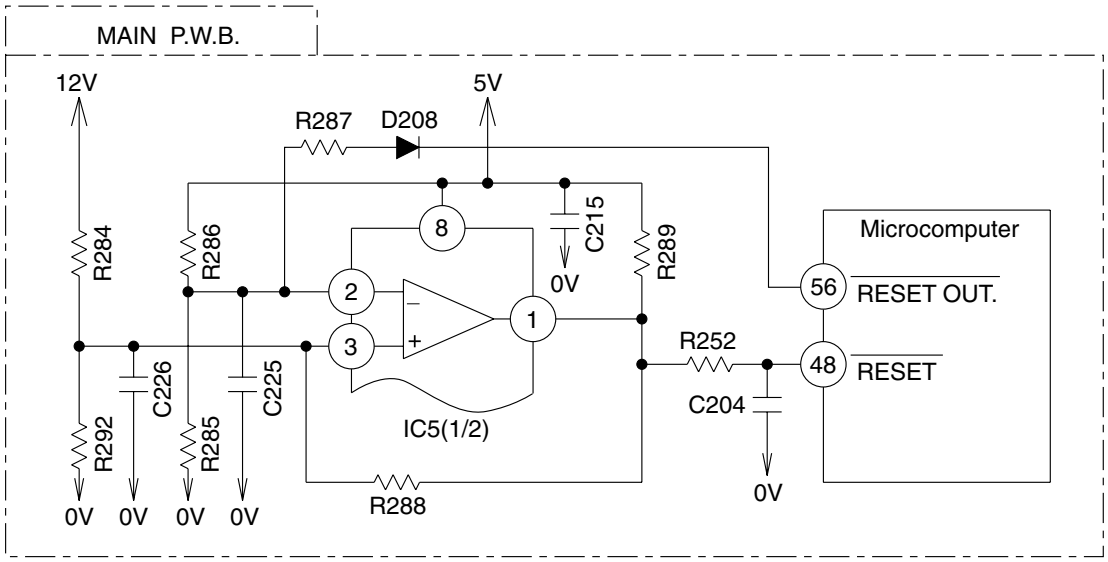

Fig. 6-7

The reset circuit initializes the microcomputer program when Power is “ON” from “OFF”.
Low voltage at pin ㊽ resets the microcomputer, and HI activates the microcomputer
Fig. 6-7 shows the reset circuit and Fig. 6-8 shows waveform at each point when power is turned on and off.
When power is turned on, 12V line and 5V line voltages rise and 12V line voltage reaches 10.9V an reset voltage input to pin ㊽ of microcomputer is set to Hi.
Reset voltage will be hold “Hi” until the 12V line voltage drops to 9.90V even though the power shuts down.

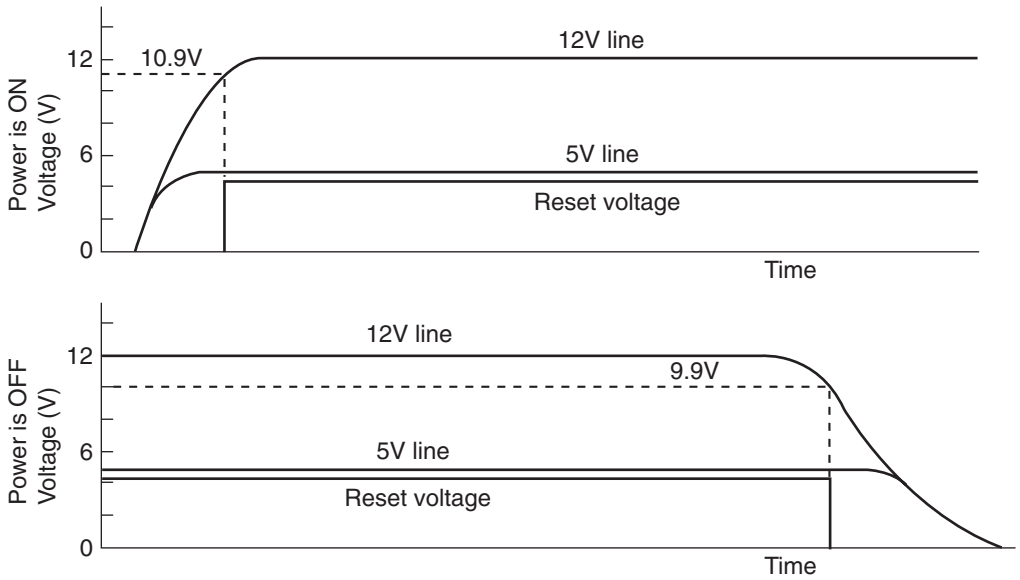

Fig. 6-8

7. Temperature Detection Circuit

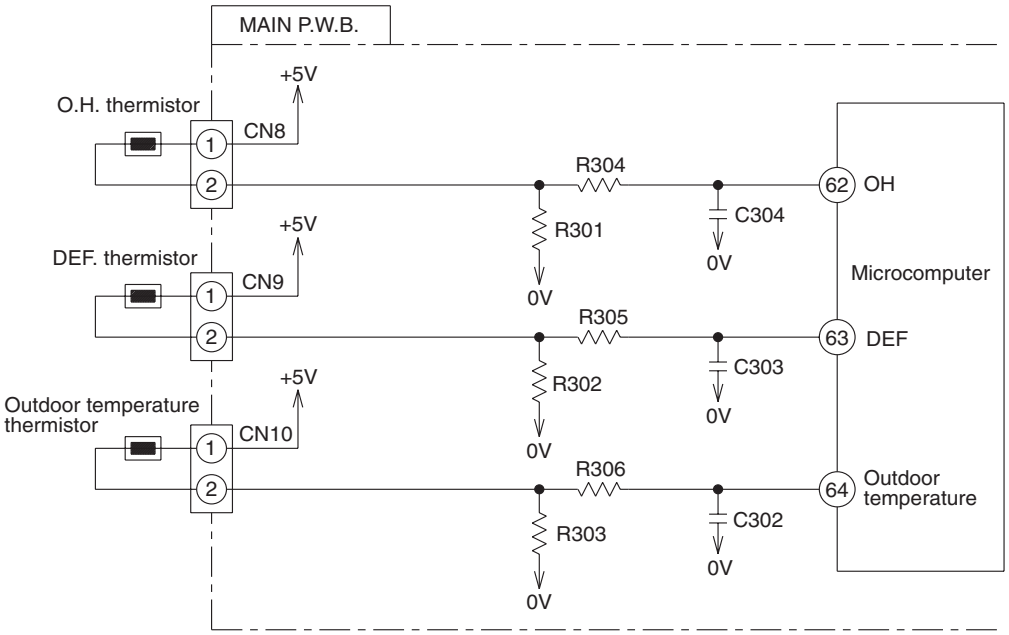

Fig. 7-1

The Over heat thermistor circuit detects the temperature at the surface of the compressor head, the Defrost. thermistor circuit detects the defrosting operation temperature.
A thermistor is a negative resistor element which has the characteristics that the higher (lower) the temperature, the lower (higher) the resistance.
When the compressor is heated, the resistance of the Over heat thermistor becomes low and voltage to a pin ⑫ of microcomputer is increased.
Microcomputer compares the voltage at pin ⑫ with the internal set value, if it is exceeded the set value microcomputer judges that the compressor is overheated and stops operation.
When frost forms on the outdoor heat exchanger, the temperature at the exchanger drops abruptly. Therefore the resistance of the Defrost. thermistor becomes high and the voltage at pin ⑬ of microcomputer drops.
If this voltage becomes lower than the set value stored inside, the microcomputer starts defrosting control.
During defrosting operation the microcomputer transfers the defrosting condition command to the indoor microcomputer via the circuit interface.
The microcomputer always reads the outdoor temperature via a thermistor (microcomputer pin ⑭), an transfers it to the indoor unit, thus controlling the compressor rotation speed according to the value set at the EEPROM in the indoor unit, and switching the operation status (outdoor fan on/off, etc.) in the dehumidifying mode.
The following shows the typical values of outdoor temperature in relation to the voltage:

Table 7-1

Outdoor temperature (℃)	− 10	0	10	20	30	40
R303 Voltage (V)	1.19	1.69	2.23	2.75	3.22	3.62

<Reference>
When the thermistor is open, in open status, or is disconnected, microcomputer pins ⑫–⑭ are approx. 0V; when the thermistor is shorted, they are approx. 5 V, and LD301 blinks seven times.
However, an error is detected only when the OH thermistor is shorted; in such a case, the blinking mode is entered 12 minutes after the compressor starts operation.

8. Reversing valve control circuit

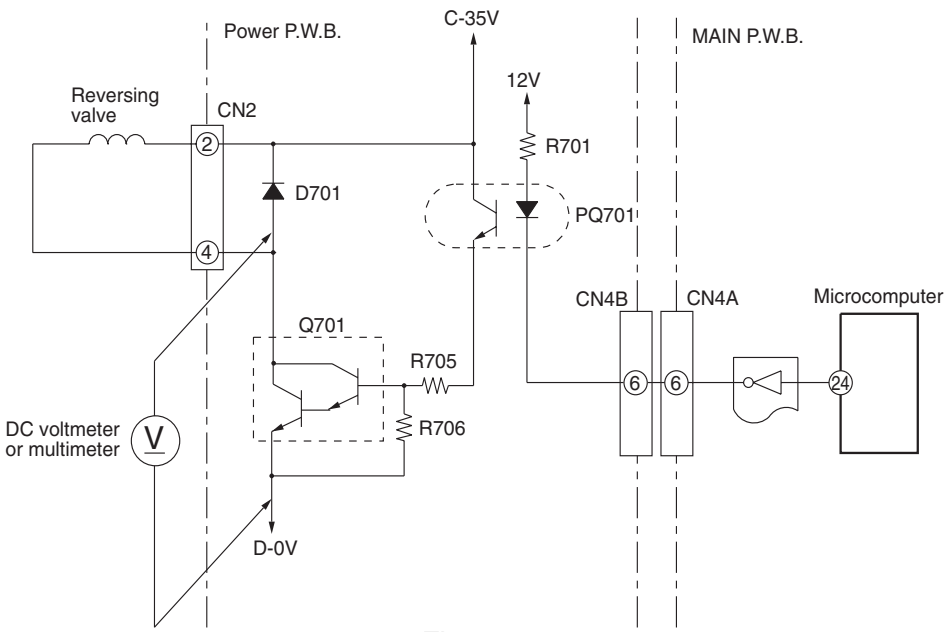

Fig. 8-1

Reversing valve control circuit will switch reversing valve ON/OFF (cooling ON) according to instruction from indoor microcomputer depending on the operation condition shows in Table 8-1.
Voltage at Q701 (between Collector and Emittor) in each operation condition is approximately as shown in Table 8-1 when measured by multimeter.

Table 8-1

Operation condition		Collector voltage of Q701
Cooling	General operation of cooling	About 0.8V
Heating	In normal heating operation	About 35V
	MAX. rotation speed instructed by indoor microcomputer after defrost is completed	About 35V
	Defrosting	About 0.8V
Dehumidifying	Sensor dry	About 0.8V

9. Electric expansion valve control circuit

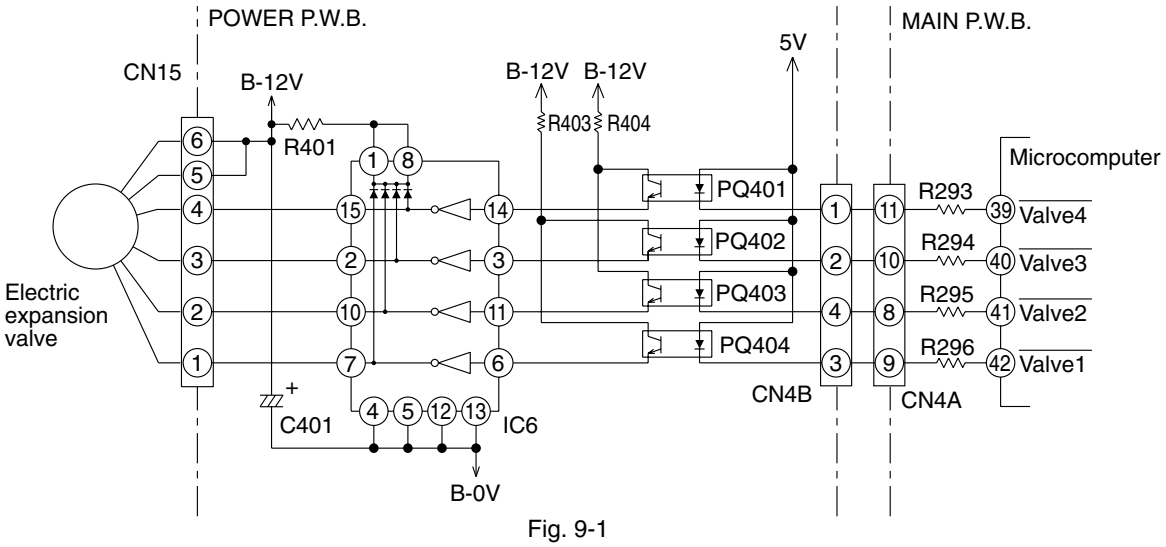

Fig. 9-1

- To drive the expansion valve, use the B-12 V output. Use a 4-phase coil and feed power to the phases 1 and 2, then switch over the filed poles to control the opening of the valve.
- The reference between conducting phase switch over direction and the open/close direction are shown in Table 9-1. When the power is turned on, approx. 0.9 V is applied to the CN15 and the pins (① to ④) and when no power is supplied, 12 V is applied. When the power is reset, the expansion valve starts initial operation for 5 to 10 seconds.
- During the initial operation, measure each pin of the CN15 (① to ④) with a multimeter. If no change is found around 0.9 V or 12V in this step, the expansion valve or the micro computer has failure.
- The logic waveform during the operating of the expansion valve is shown in Fig. 9-2.

Table 9-1

CN15 Pin No.	Lead wire	Drive status							
		1	2	3	4	5	6	7	8
④	White	ON	ON	OFF	OFF	OFF	OFF	OFF	ON
③	Yellow	OFF	ON	ON	ON	OFF	OFF	OFF	OFF
②	Orange	OFF	OFF	OFF	ON	ON	ON	OFF	OFF
①	Blue	OFF	OFF	OFF	OFF	OFF	ON	ON	ON

Operation mode
1→2→3→4→5→6→7→8 VALVE CLOSE
8→7→6→5→4→3→2→1 VALVE OPEN

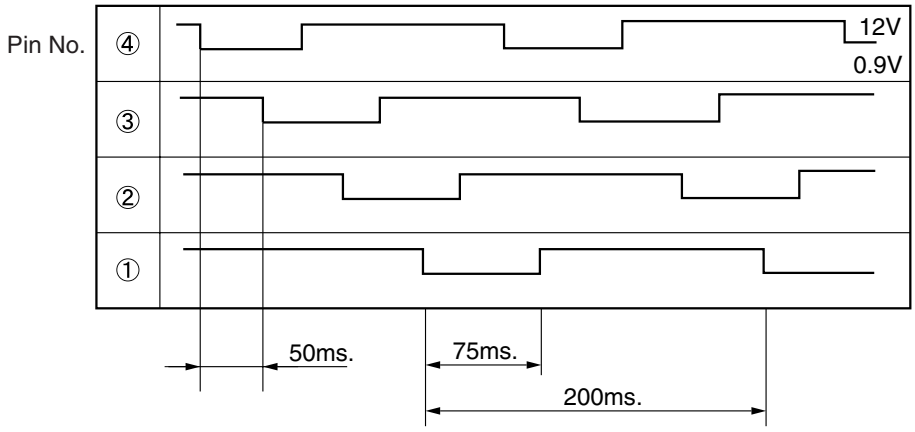

Fig. 9-2

10. Outdoor DC Fan Motor control circuit

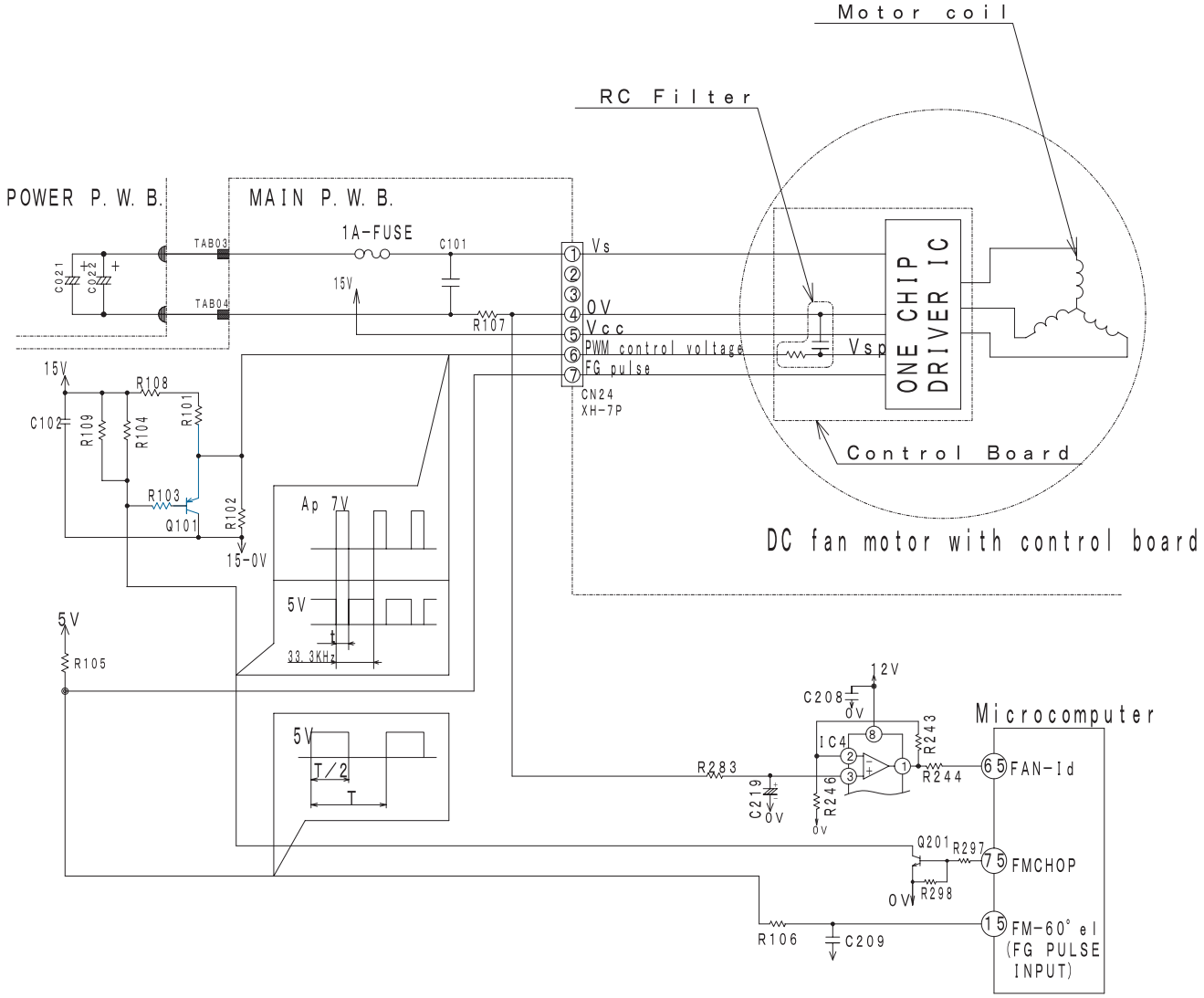

This model uses DC Fan Motor which has a controller circuit built in the Motor.
This DC Fan Motor will rotate by control voltage apply to Vsp input. (Voltage range: 1.7 to 7V DC.

Vsp high : Faster ;
Vsp low : slower ;
Vsp lower than 1.7V : stop

Motor will output FG pulse by following this motor revolution.
Outdoor microcomputer will output PWM control signal from ⑮ by following the instruction from indoor microcomputer.
This PWM control signal will convert to Vsp voltage by smoothing circuit (R242 & C209).
Fan motor will start to rotate when Vsp was proceeding over than 1.7V, and generate FG pulse by rotation speed.
FG pulse will feed back to Outdoor microcomputer ⑮.
DC Fan Motor circuit has to match the Fan Motor revolution with instructed revolution. Such as...

FG feedback: Faster Instruction: Slower ... Decrease pulse width
FG feedback: Slower Instruction: Faster ... Increase pulse width

FG pulse is also used for Fan Motor failure detection.
Microcomputer will monitor FG pulse 30 seconds after start the fan motor. If there is no signal detected, it will consider that the Fan Motor was malfunction and stop the operation. In this case, LD302 on control P.W.B. will blink 12 times. (Fan Motor lock detected)
R107 and IC4 are used for Fan Motor over current.

< Reference >
When operation stop with LD301 blinks 12 times, it may be caused by faulty DC fan motor.
In this case, please check CN6 and CN12 connection first. It makes Fan Motor Lock also if those connectors are in misconnection.
DC Fan Motor has broken invites 1A Fuse burned. Please replace both DC Fan Motor and 1A Fuse together.
It will makes “Fan Lock Stop” when something has disturb the Fan rotation by inserting materials into propeller fan or ice has growing inside of outdoor unit by snowing.
It may make “Fan Lock Stop” by strong wind (ex. 17m/sec or above) against the Fan rotation. In this case unit will be restart again after a while.
In case of “ Fan Lock Stop” even though the DC Fan Motor is rotating correctly, the possible cause in Fan Motor problem or control board problem. Stop after the Fan motor runs 2 minutes, Fan Motor may be broken.
< Caution >
Please take care for the electrical shock by high voltage of DC Fan Motor power source which is common with compressor when you are servicing this unit.
You can not confirm the coil and wiring of Motor directly due to the built in control circuit in Fan Motor.

SERVICE CALL Q & A

Model RAS-14EH1 / RAC-14EH1

COOLING MODE

Q1 The compressor has stopped suddenly during cooling operation.

A1 Check if the indoor heat exchanger is frosted. Wait for 3-4 minutes until it is defrosted.

If the air conditioner operates in cooling mode when it is cold, the evaporator may get frosted.

DEHUMIDIFYING MODE

Q2 Fan speed is not switched over during dehumidifying operation.

A2 Fans speed is normally set to LOW during dehumidifying operation.

Q3 Cool air comes from the unit during dehumidifying operation.

A3 To have an operation with high dehumidifying effect, the unit operates at low fan speed. As a result, cool air comes from the unit. This phenomenon is not a fault.

HEATING MODE

Q4 The circulation stops occasionally during Heating mode.

A4 It occurs during defrosting. Wait for 5-10 minutes until the condenser is defrosted.

Q5 When the fan speed is set at HIGH or MED, the flow is actually Weak.

A5 At the beginning of heating, the fan speed remains LOW for 30 seconds. If HIGH is selected, it switches to LOW and again to MED after additional 30 seconds.

Q6 Heating operation stops while the temperature is preset at "30".

A6 If temperature is high in the outdoor, heating operation may stop to protect internal devices.

Q7 When “Auto fan” mode is set, the indoor fan speed changes from HIGH through MED to LOW.

A7 This is not an error. The anti cool air function shows this phenomenon.

In the fan “Auto” mode, the unit detects the heat exchange temperature. When the temperature becomes low, the fan speed changes from HIGH, through MED to LOW.

AUTO FRESH DEFROSTING

Q8 After the ON/OFF button is pressed to stop heating, the outdoor unit is still working with the OPERATION lamp lighting.

A8 Auto Fresh Defrosting is carried out : the system checks the outdoor heat exchanger and defrosts it as necessary before stopping operation.

AUTO OPERATION

Q9 Fan speed does not change when fan speed selector is changed during auto operation.

A9 At this point fan speed is automatic.

NICE TEMPERATURE RESERVATION

Q10 When on-timer has been programmed, operation starts before the preset time has been reached.

A10 This is because Nice temperature reservation function is operating. This function starts operation earlier so the preset temperature is reached at the preset time. Operation may start maximum 60 minutes before the preset time.

Q11 Does Nice temperature reservation function operate during dehumidifying?

A11 It does not work. It works only during cooling and heating.

Q12 Even if the same time is preset, the operation start time varies.

A12 This is because Nice temperature reservation function is operating. The start time varies according to the load of room. Since load varies greatly during heating, the operation start time is corrected, so it will vary each day.

INFRARED REMOTE CONTROL

Q13 Timer cannot be set.

A13 Has the clock been set? Timer cannot be set unless the clock has been set.

Q14 The current time display disappears soon.

A14 The current time disappears in approx. 10 seconds. The time set display has priority.

When the current time is set the display flashes for approx. 3 minutes.

Q15 The timer has been programmed, but the preset time disappears.

A15 Is the current time past the preset time? When the preset time reaches the current time, it disappears.

Q16 When the “Sleep” timer is set during operation,
(1) The indoor fan won’t rotate.
(No air comes from the unit)
(2) The air speed won’t change.

A16 (1) The temperature arrives at the preset indoor temperature and the air conditioner unit is temporarily stopped. Within about 3 minutes, the fan starts rotation.
(2) When the unit operates at “LOW” air speed, it continues to operate at the same speed.

Q17 The preset temperature is not indicated on the remote control.

A17 When automatic operation is performed, the preset temperature won’t be indicated.
However, you can adjust the temperature within a range of ±3°C by pressing the “Room Temperature” button.
If the temperature is 1°C higher than the auto preset temperature, ▲ 1°C will appear.
If the temperature is 1°C lower than the auto preset temperature, ▼ 1°C will appear.

OTHERS

Q18 The indoor fan varies among high air flow, low air flow and breeze in the auto fan speed mode. (Heating operation)

A18 This is because the cool wind prevention function is operating, and does not indicate a fault.

The heat exchanger temperature is sensed in the auto speed mode. When the temperature is low, the fan speed varies among high air flow, low air flow and breeze.

Q19 Loud noise from the outdoor unit is heard when operation is started.

A19 When operation is started, the compressor rotation speed goes to maximum to increase the heating or cooling capability, so noise becomes slightly louder. This does not indicate a fault.

Q20 Noise from the outdoor unit occasionally changes.

A20 The compressor rotation speed changes according to the difference between the thermostat set temperature and room temperature. This does not indicate a fault.

Q21 There is a difference between the set temperature and room temperature.

A21 There may be a difference between the set temperature and room temperature because of construction of room, air current, etc. Set the temperature at a comfortable for the space.

Q22 Air does not flow immediately after operation is started.

A22 Preliminary operation is performed for one minute when the power switch on and heating or dehumidifying is set. The operation lamp blinks during this time for heating. This does not indicate a fault.

RAC-14EH1
PRECAUTIONS FOR CHECKING

WARNING

Remember that voltage of 175 V is applied to the 0V line on the P.W.B. or the like as shown in the right diagram.

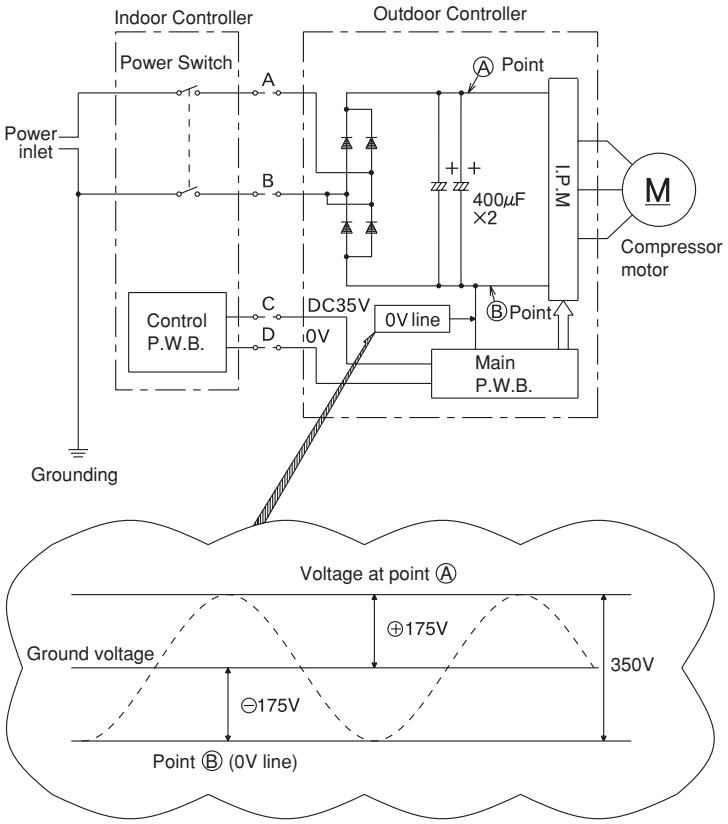

WARNING

When using an oscilloscope, never ground it.
Donít forget that high voltage as noted in the figure above may apply to the oscilloscope.

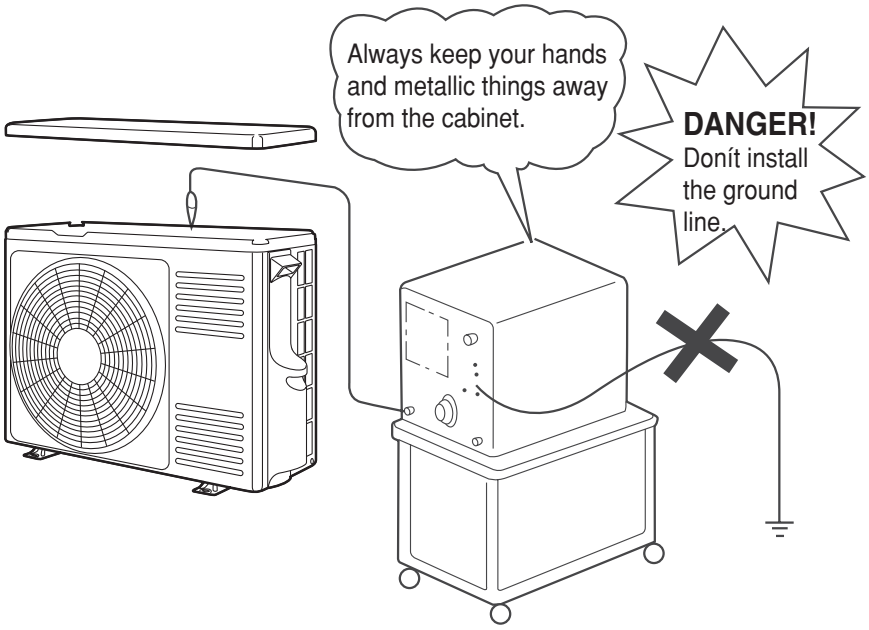

DISCHARGE, PROCEDURE AND POWER SHUT OFF METHOD FOR POWER CIRCUIT

WARNING

Caution

- Voltage of about 350 V is charged between the terminal of smoothing capacitors (400μF x 2).
- During continuity check for each circuit part of the outdoor unit, be sure to discharge the smoothing capacitors.

Discharge Procedure

1. Turn off the power of the indoor unit or pull out the power supply plug.
2. After power is turned off, wait for 10 minutes or more. Then, remove electrical parts cover and apply soldering iron of 30 to 75 W for 15 seconds or more to TAB3(GRAY) and TAB4(RED) terminals on the main P.W.B. as shown in the figure below, in order to discharge voltage in smoothing capacitor.

Do not use a soldering iron with transformer: Otherwise, thermal fuse inside transformer will be blown.

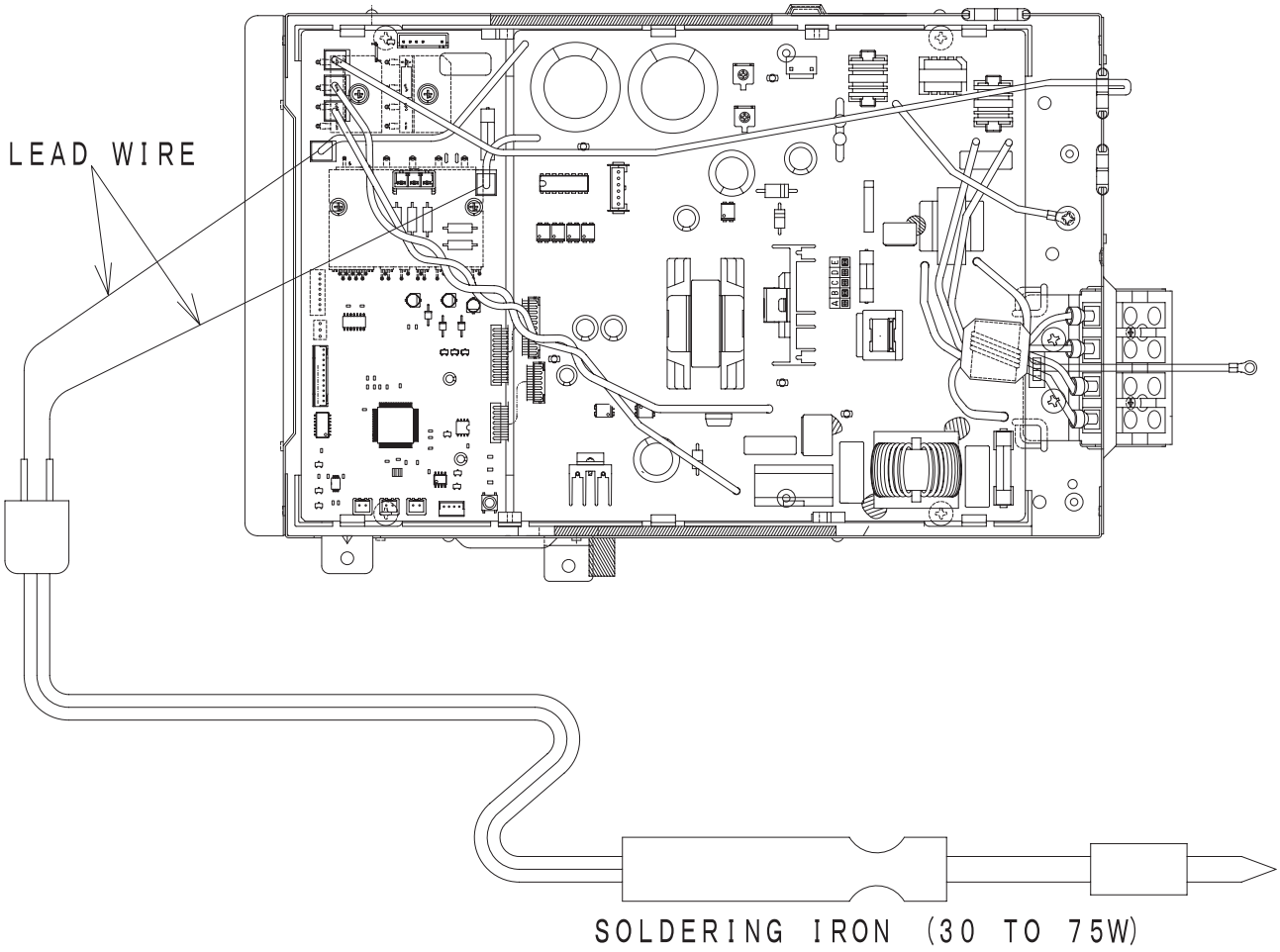

STRUCTURE OF AN INDOOR UNIT ELECTRIC PARTS

RAS-14EH1

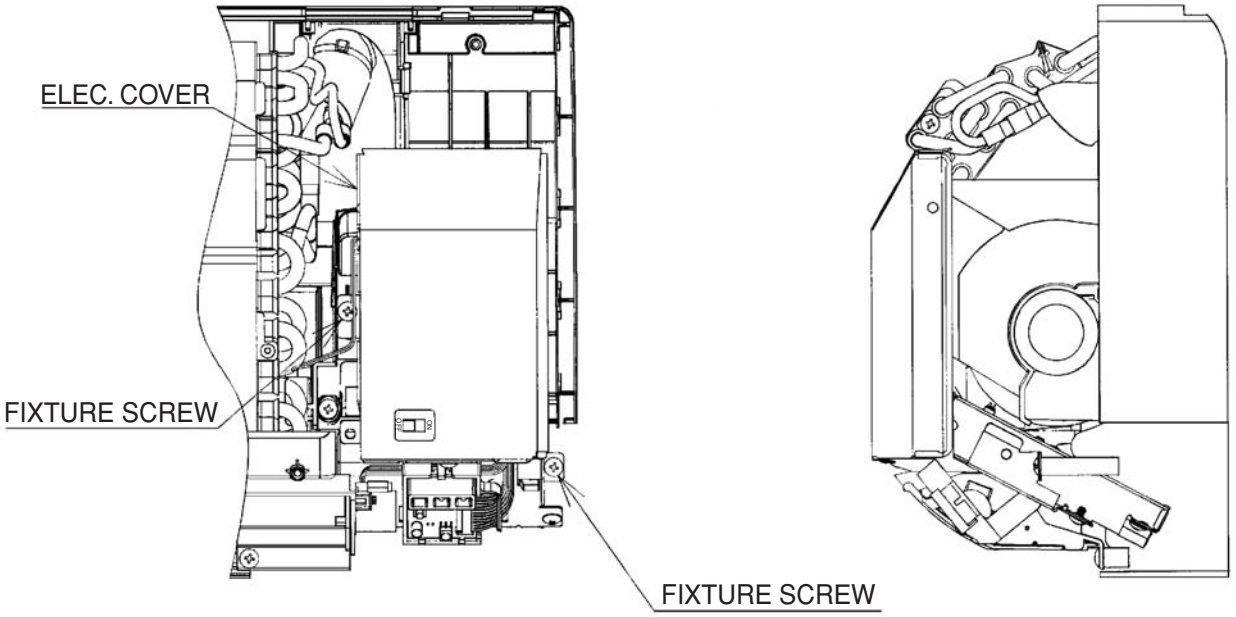

Removing electrical parts

1. Remove the electrical parts cover.
2. Remove the connectors from the CN1 (heat exchange thermistor), CN4 (stepping motor) and CN10 (fan motor).
3. Remove two lock screws.
4. Remove the electrical parts in the direction of arrow.

When installing the parts, use caution not to pinch any code between the part and cabinet.

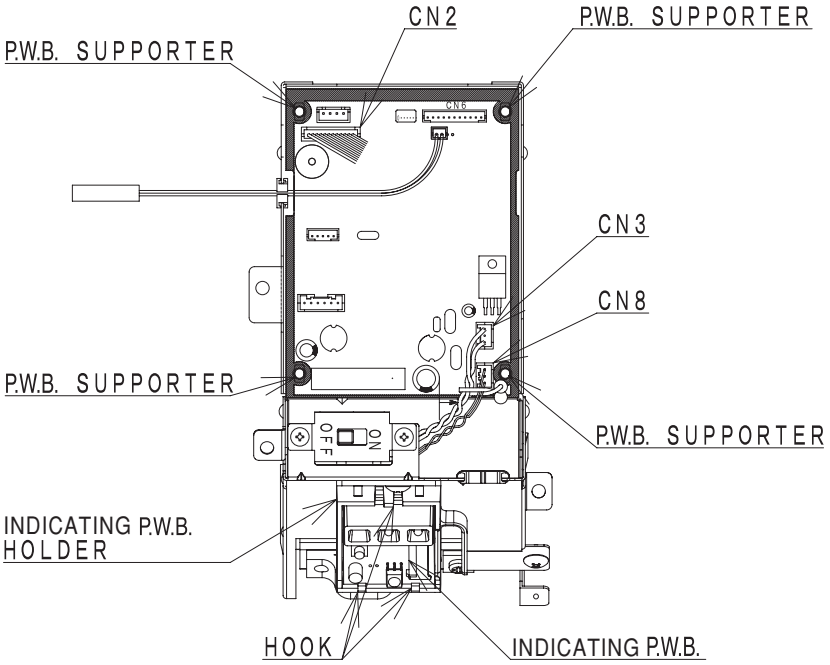

Removing control P.W.B.

1. Remove the connectors from the CN2 and CN3.
2. Remove the P.W.B. from the P.W.B. support.

Removing the indicating P.W.B.

1. Remove the connector from the CN2 on the control P.W.B.
2. Remove the upper hook from the indicating P.W.B. lock resin, pull the P.W.B. forward a little and remove it.

Other Cautions

(1) Cautions concerning ICP (IC Protector)

1. Use due caution for short circuit in servicing.
   Short circuit will open the ICP immediately.
2. When the ICP opens, remove the cause of this phenomenon and replace the ICP.
   If the remedy is improper, the ICP may open again.

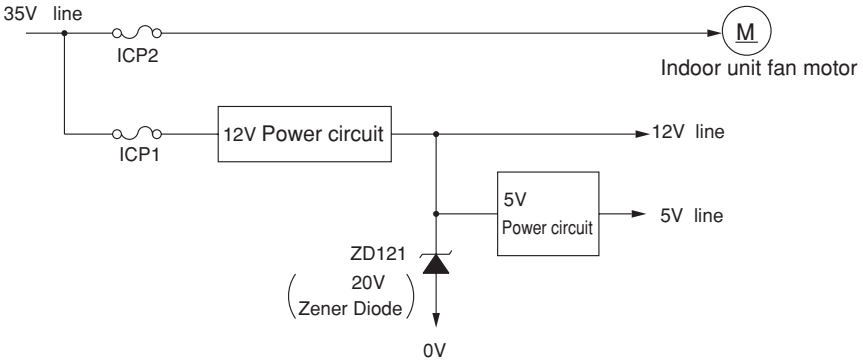

(2) The CN3 (power supply) and CN10 (fan motor) are the connectors with lock mechanism. Press the lock with your fingers to unlock and remove the connector.

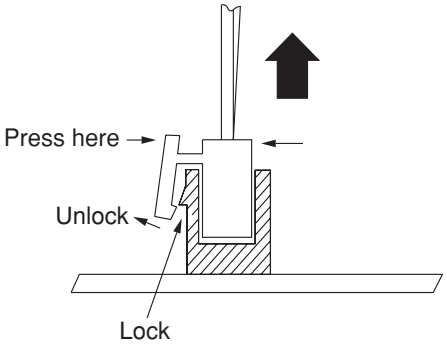

(3) When checking the voltage and waveform, do not connect the probes to the forbidden areas show below. Touching them may cause the ICP1 blowout and Q111 failure.

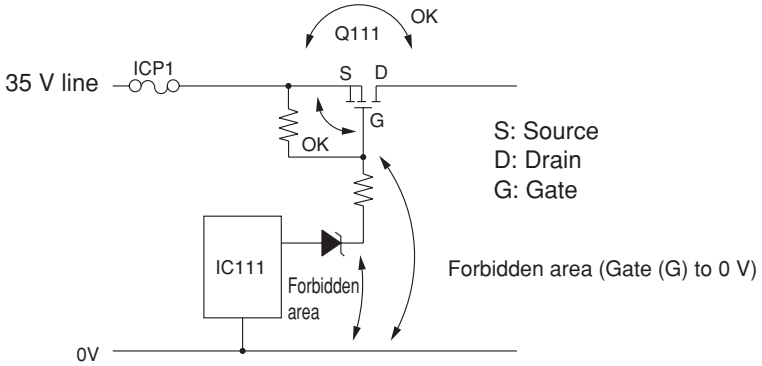

The Q111 is a MOS-FET and its gate terminal is a high impedance. When a probe such as a multimeter is contacted with the gate Ⓖ, the Q111 may have the continuous ON state to supply overcurrent in the circuit, causing the ICP1 blowout and Q111 failure.

When checking the switching waveform of the Q111, set the source Ⓢ to the base and measure the gate Ⓖ and drain Ⓓ.

(4) During power feeding to the P.W.B., do not remove and insert the CN10 (fan motor connector). Failure to do so may cause overcurrent to the fan motor and P.W.B.s (micro computer, IC and the like) and a failure may occur. To remove or insert the CN10, be sure to shut off the power.

THE SUPPORT FUNCTION OF FAILURE DIAGNOSIS

No.	Function Name	Description
1	Self-diagnosis indication function <Indicating a failure on the indoor unit side>	• The “timer lamp” indicates a mode of failure detected on the indoor or outdoor unit side by blinking frequency. • A failure detected on the outdoor unit side will be indicated by the “timer lamp” blinking 4 times after a retry operation has been performed several times. Note: In some failure modes, only the retry operation is repeated without lamp indication. <Failure modes that will repeat a retry operation without the indoor unit lamp indication are as follows:> OH thermistor temperature rise Outdoor unit communication error Power voltage abnormal Less frequent defects
	<Indicating a failure on the outdoor unit side>	• The “LD301” indicates a mode of failure detected on the outdoor unit side by blinking frequency. Upon failure detection, the outdoor unit will shut down and the LD301 continues to blink until the unit is reset. (In the event of communication errors, the LD301 continues to blink until communication is restored.)

TROUBLESHOOTING WHEN TIMER LAMP BLINKS.

Model RAS-14EH1
Perform troubleshooting according to the number of times the indoor timer lamp and outdoor LD301 blink.

SELF-DIAGNOSIS LIGHTING MODE
Model: RAS-14EH1

No.	Blinking of Timer lamp	Reason for indication	Possible cause
1	2sec. ---------- 1 time	Reversing valve defective When the indoor heat exchanger temperature is too low in the heating mode or it is too high in the cooling mode.	(1) Reversing valve defective (2) Heat exchanger thermistor disconnected (only in the heating mode) (Note) The malfunction mode is entered the 3rd time this abnormal indication appears (read every 3 minutes).
2	2sec. ---------- 2 times	Outdoor unit is under forced operation When the outdoor unit is in forced operation or balancing operation after forced operation.	Electrical parts in the outdoor unit
3	2sec. ----------3 times	Indoor/outdoor interface defective When the interface signal from the outdoor unit is interrupted.	(1) Indoor interface circuit (2) Outdoor interface circuit
4	2sec. --------4 times	Outdoor unit electrical components defetive When the same error mode is detected 8 times within 30 minutes from outdoor unit electrical components. (However, when error is detected 8 times within two hours only for outdoor thermistor.)	Outdoor unit electrical components (For details, operate again using remote comtroller and check from self-diagnosis display of outdoor unit.)
5	2sec. -----9 times	Room thermistor or heat exchanger thermistor is faulty When room thermistor or heat exchanger thermistor is opened circuit or short circuit.	(1) Room thermistor (2) Heat exchanger thermistor
6	2sec. --- 10 times	Over-current detection at the DC fan motor when over-current is detected at the DC fan motor of the indoor unit.	(1) Indoor fan locked (2) Indoor fan motor (3) Indoor control P.W.B.
※1 7	2sec. --- 13 times	IC401 or IC402 data reading error When data read from IC401 or IC402 is incorrect.	IC401 or IC402 abnormal

(--- Lights for 0.35 sec. at interval of 0.35 sec.)

<Cautions>

(1) If the interface circuit is faulty when power is supplied, the self-diagnosis display will not be displayed.

(2) If the indoor unit does not operate at all, check if the connecting cable is connected to the outdoor unit.

(3) To check operation again when the timer lamp is blinking, you can use the remote control for operation (except for mode mark ※1).

SELF-DIAGNOSIS LIGHTING MODE

MODEL RAC-14EH1

⚠ DANGER (DC350V)

- CUT THE POWER SOURCE AND WAIT MORE THAN 10 MINUTES BEFORE SERVICE WORK.
- CONFIRM THE DC VOLTAGE AT THE MEASURING POINT SHOWN IN FIGURE MUST BE LESS THAN 10V.
- DO NOT TOUCH THE OTHER COMPONENTS WHEN OPERATING THE SERVICE SWITCH.

SERVICEOPERATION

PROCEDURE OF REFRIGERANT PUMP DOWN OR INDEPENDENT OPERATION OF OUTDOOR UNIT.

1. CUT OFF THE POWER SOURCE ONCE THEN ON AGAIN.
2. WAIT 1 MINUTE AT LEAST.
3. PRESS THE SERVICE SWITCH (WHICH IS ON THE PWB) MORE THAN 1 SECOND.

SERVICE OPERATION WILL BE STARTED.
TO STOP THIS OPERATION, PRESS THE SERVICE SWITCH AGAIN (MORE THAN 1 SECOND).
TO RESUME TO NORMAL OPERATION, CUT THE POWER SOUCE ONCE THEN ON AGAIN.
IN ORDER TO PROTECT THE DAMAGE OF COMPRESSOR, DO NOT OPERATE MORE THAN 5 MINUTES WITH SERVICE VALVE CLOSE.

SELF-DIAGNOSIS LIGHTING MODE ■:LIGHT ▨:BLINK □:OFF

LD301	LD302	SELF-DIAGNOSIS NAME	DETAILS	MAIN CHECK POINT
		[1] DURING OPERATION	LD303 (RED) LIGHTS. ■	
□	□	NORMAL OPERATION	COMPRESSOR OPERATION	NOT MALFUNCTION
■	□	OVERLOAD (1)	ROTATION SPEED (1) (2) SET VALUE (3) TIME THE ROTATION SPEED IS AUTOMATICALLY CONTROLLED TO PROTECT THE COMPRESSOR IN THE OVERLOAD CONDITION.	THIS SHOWS AN OVERLOAD PROTECTION STATUS. NOT MALFUNCTION.
□	■	OVERLOAD (2)		
■	■	OVERLOAD (3)		
		[2] DURING STOP	LD303 (RED) GOES OFF. □	
□	□	NORMAL STOP	STOPPED BY THERMOSTAT OR CONTROLLER.	NOT MALFUNCTION.
▨	□	RESET STOP (1TIME)	MICROPROCESSOR WAS REBOOTED. (IT IS NORMAL WHEN POWER SW HAS BEEN TURNED ON).	①POWER P. W. B. ②MAIN P. W. B.
▨	□	PEAK CURRENT CUT (2TIMES)	COMPRESSOR PEAK CURRENT WAS BEYOND MAXIMUM LIMIT.	①MAIN P. W. B. ②COMPRESSOR ③POWER P. W. B.
▨	□	ABNORMAL LOW SPEED ROTATION (3TIMES)	LOST THE COMPRESSOR ROTOR POSITION.	①MAIN P. W. B. ②COMPRESSOR ③POWER P. W. B.
▨	□	SWITCHING FAILURE (4TIMES)	SWITCHING FROM LOW FREQUENCY SYNC START TO POSITION DETECTION OPERATION FAILURE.	①MAIN P. W. B. ②COMPRESSOR ③POWER P. W. B.
▨	□	OVERLOAD LOWER LIMIT CUT (5TIMES)	OVERLOAD PROTECTION FUNCTION IS REQUESTING LOWER SPEED THAN MINIMUM SPEED OF COMPRESSOR.	①OUTDOOR UNIT IS EXPOSED TO DIRECT SUNLIGHT OR ITS AIRFLOW BLOCKED. ②FAN MOTOR ③MAIN P. W. B. ④THE VOLTAGE IS EXTREMELY LOW.
▨	□	OH THERMISTOR TEMP. RISE (6TIMES)	COMPRESSOR OVERHEAT WAS DETECTED BY OH THERMISTOR.	①LEAK OF REFRIGERANT ②COMPRESSOR ③OH THERMISTOR CIRCUIT (MAIN P. W. B.)
▨	□	THERMISTOR ABNORMAL (7TIMES)	ABNORMAL THERMISTOR VALUE (OPEN OR SHORT) WAS DETECTED.	①THERMISTOR ②CONNECTION OF THERMISTOR DEFECTIVE ③THERMISTOR CIRCUIT
▨	□	ACCELERATION FAILURE (8TIMES)	COMPRESSOR WAS NOT ACCELERATED MORE THAN MINIMUM SPEED.	①LEAK OF REFRIGERANT ②COMPRESSOR
▨	□	COMMUNICATIONS ERROR (9TIMES)	COMMUNICATIONS BETWEEN INDOOR UNIT AND OUTDOOR UNIT ARE INTERRUPTED	①CABLE IS WRONG CONNECTED ②CABLE IS OPEN ③INTERFACE CIRCUIT OF BETWEEN INDOOR UNIT AND OUTDOOR UNIT
▨	□	ABNORMAL POWER SOURCE (10TIMES)	ABNORMAL POWER SOURCE WAS DETECTED	①ABNORMAL POWER SOURCE ②CABLE IS WRONG CONNECTED ③POWER P. W. B. ④MAIN P. W. B.
▨	□	FAN LOCK ERROR (12TIMES)	OUTDOOR FAN RPM IS NOT ROTATE AS INTENDED RPM	①FAN MOTOR ②FAN MOTOR CIRCUIT
▨	□	EEPROM READ ERROR (13TIMES)	MICROCOMPUTER CANNOT READ THE DATA IN EEPROM.	①MAIN P. W. B.

※EXAMPLE OF BLINKING (5 TIMES) ▨▨▨▨▨ 2SEC ■ ··LIGHTS FOR 0.25 SEC AT INTERVAL OF 0.25 SEC.

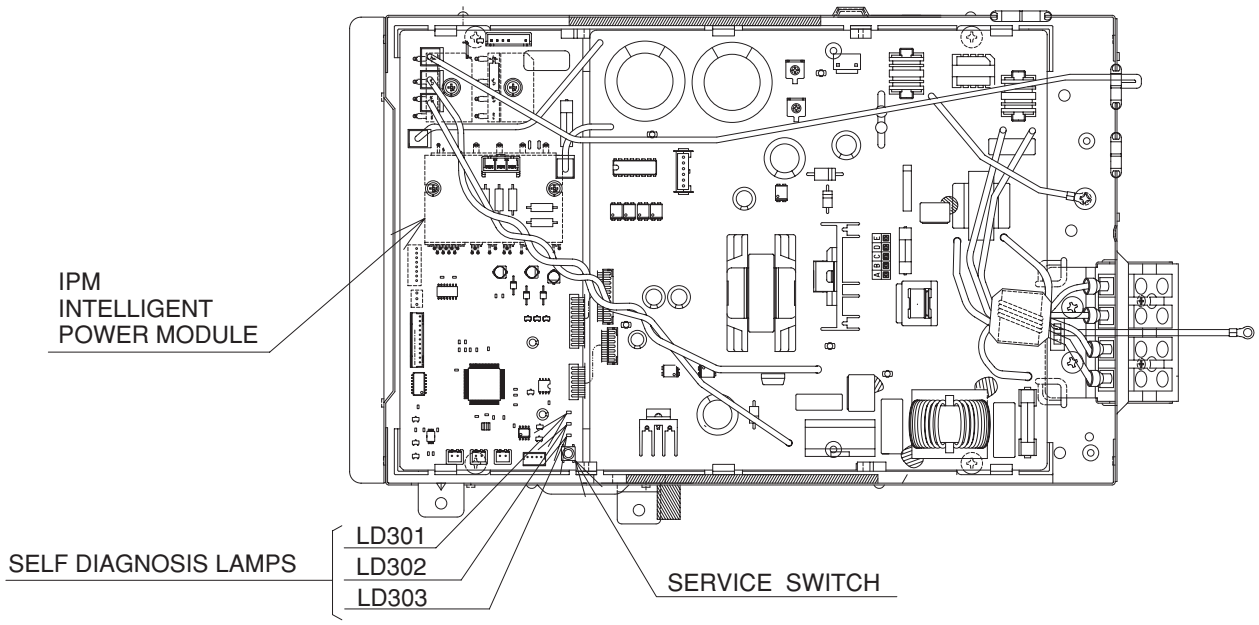

OUTDOOR UNIT

Remove the compressor connector.

1/ 2/ IPM (Intelligent Power Module)
3/ Service Switch
4/ Self-Diagnosis Lamp

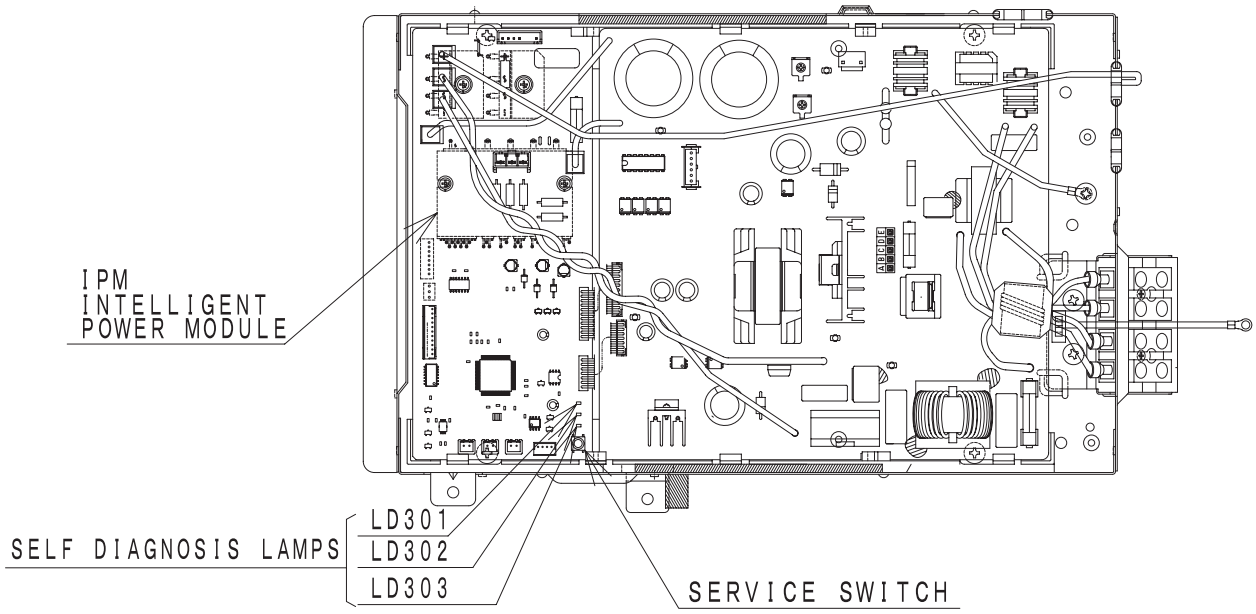

If your first attempt fails, wait 3 minutes (for the unit to re-start) and check the self-diagnosis lamp status again.

With the unit set in the operating state, press the start/stop button.
Does the unit operate for approximately 2 seconds (the LD303 coming on) and then stop due to a failure of switching (the lamp blinking 4 times)?

Yes

- Check the drive circuit (IPM) using the PRD checker.
- Check the position sensor circuit.

Normal

Check the refrigerating cycle.

No

Check outdoor electrical parts.

CHECKING THE INDOOR/OUTDOOR UNIT ELECTRICAL PARTS AND REFRIGERATING

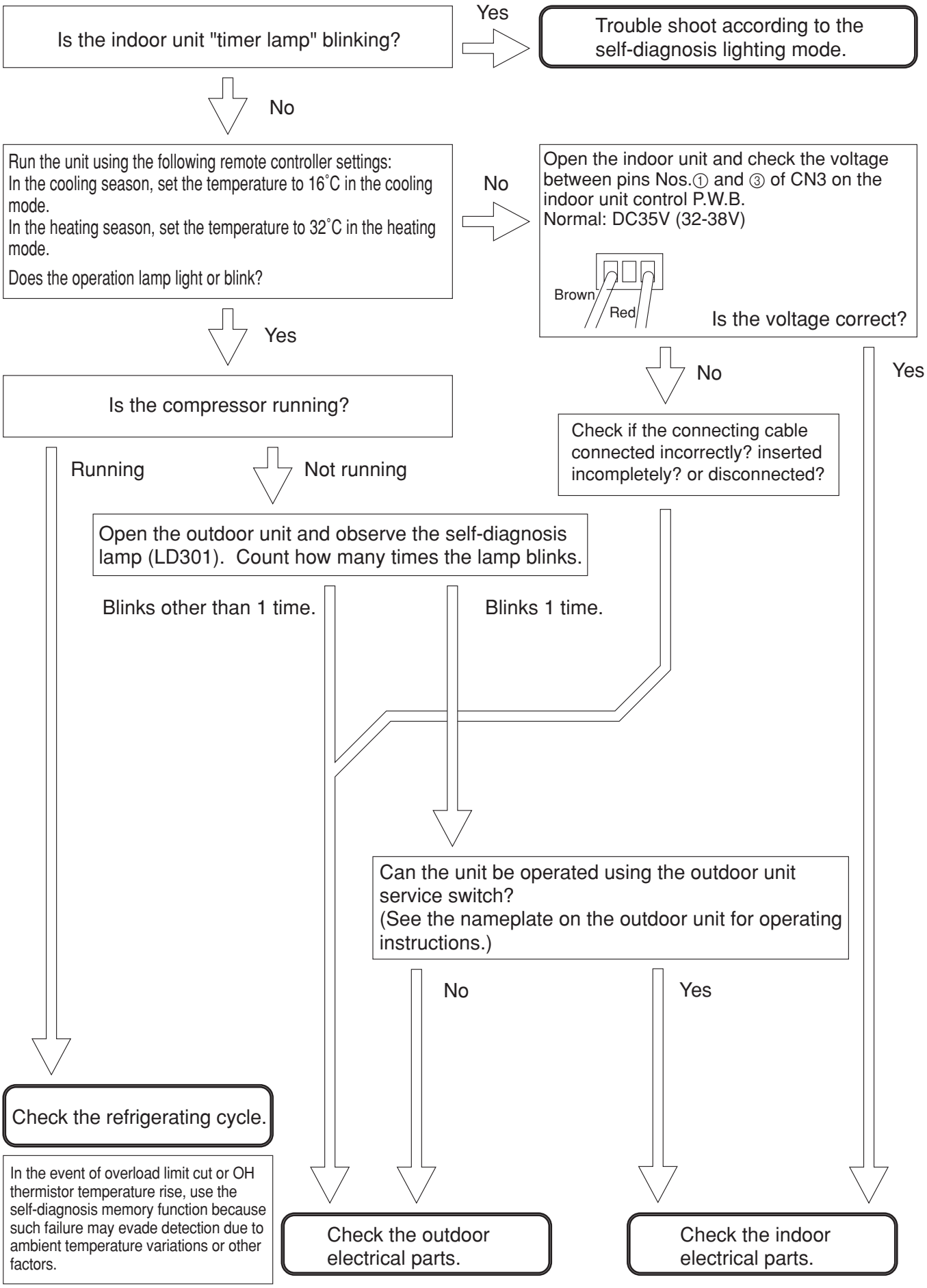

CHECKING THE INDOOR UNIT ELECTRICAL PARTS

1. Power does not come on (no operation)

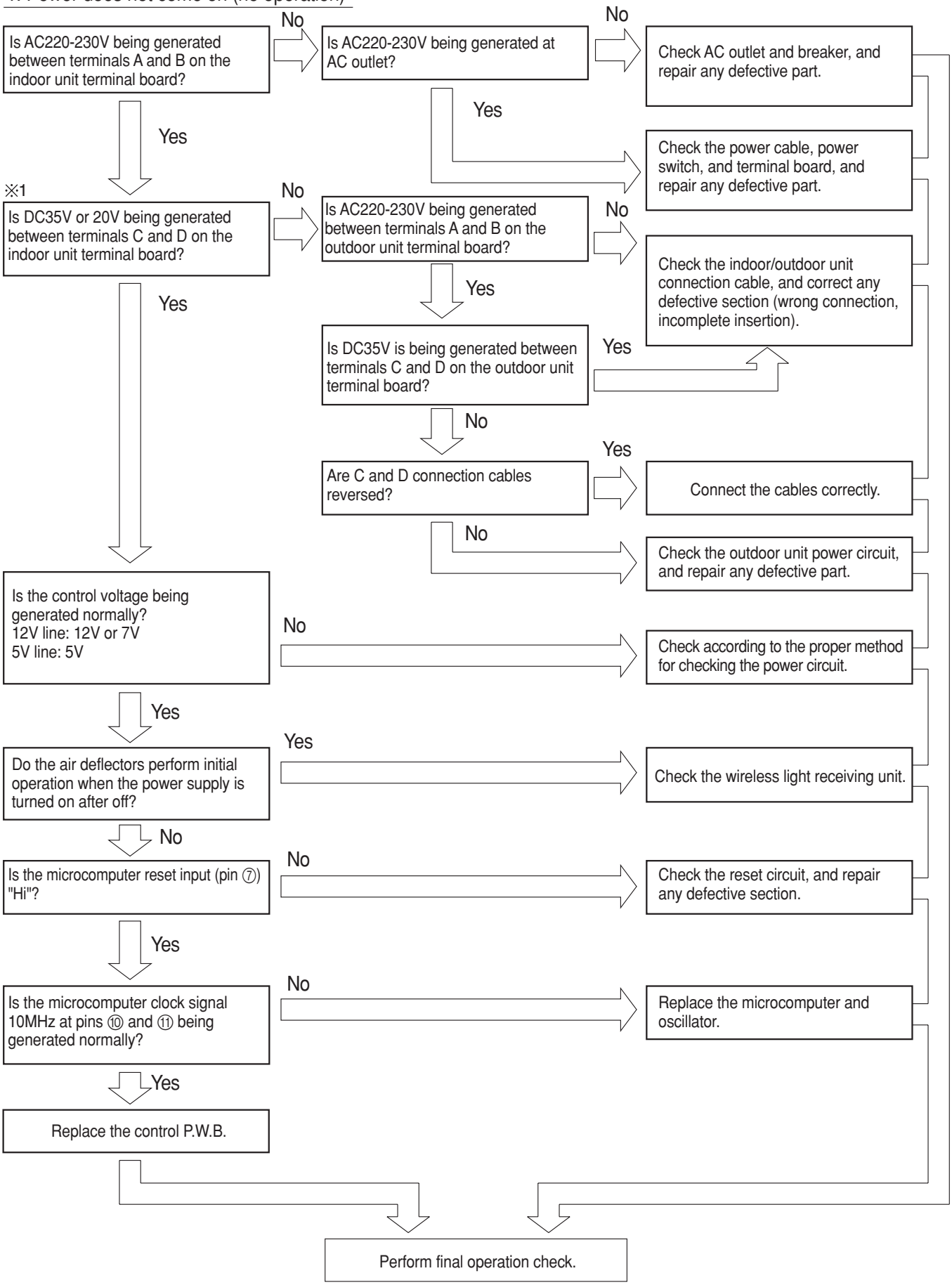

※1: When not in operation, the unit will enter into a low-power standby state, possibly causing a voltage drop to the 12V and 35V lines as shown below.

25V - 20V
12V - 7V

2. Indoor fan does not operate (others are normal)

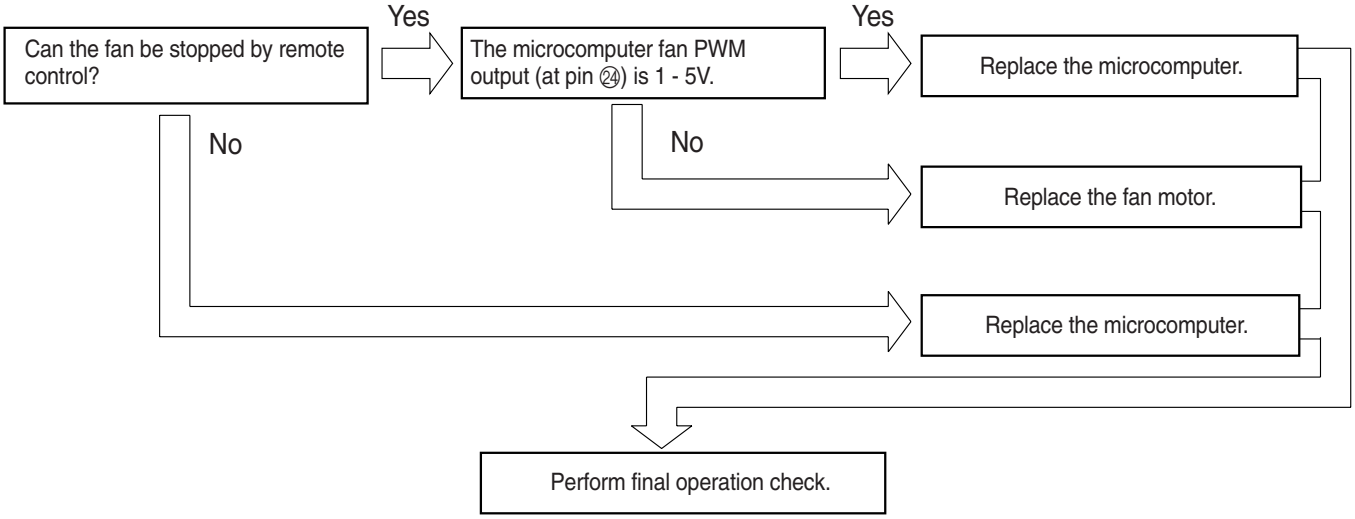

3. Air deflector does not move (others are normal)

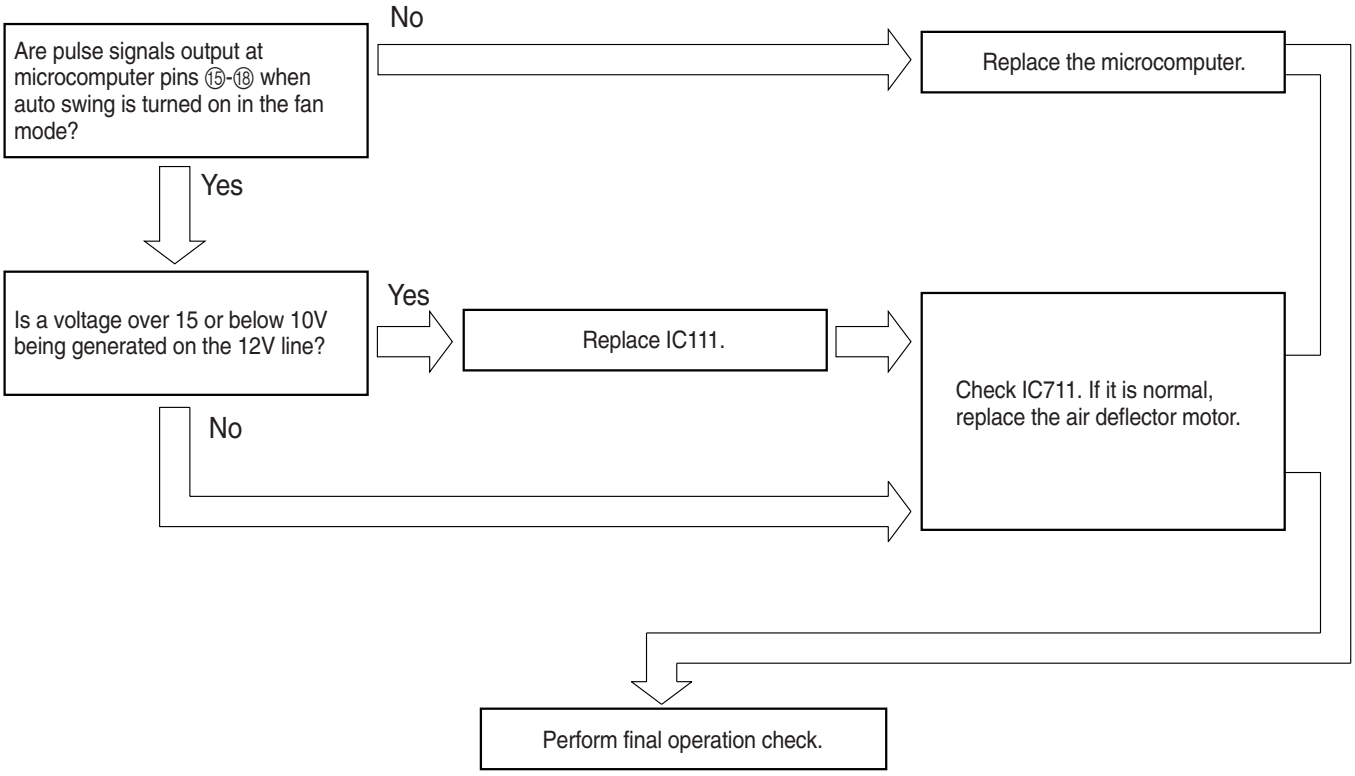

4. Check the control P.W.B. (power circuit)

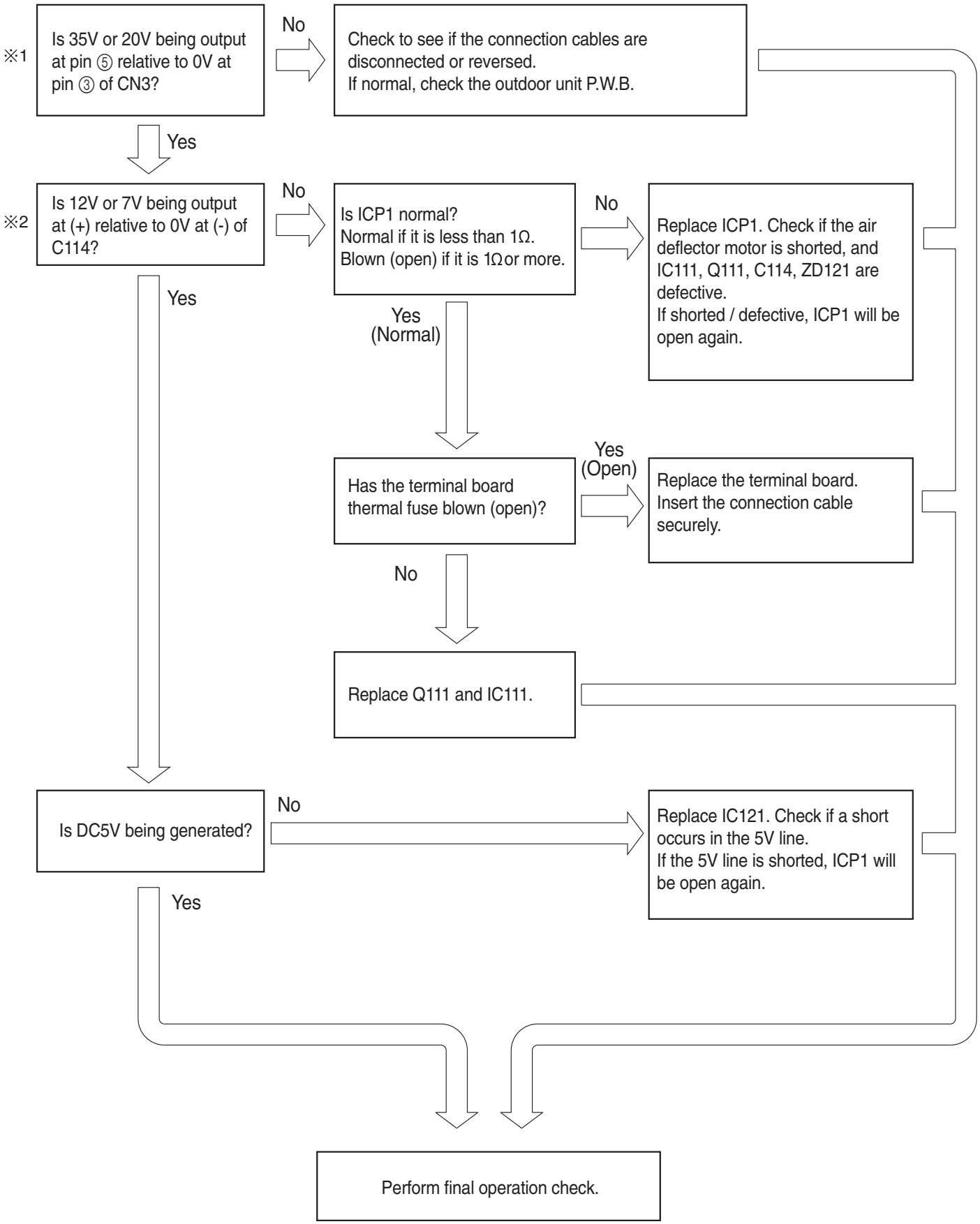

※1: When the unit is not in operation, the voltage across the 35V line may drop to 20V.
※2: When the unit is not in operation, the voltage across the 12 V line may drop to 7V.

CHECKING THE REMOTE CONTROLLER

Is battery polarity correct?

No → Install the battery in the correct polarity.

Yes ↓

Is the battery check sign [+ -] flashing?

Yes → Replace the battery.

No ↓

Turn on an AM radio, bring the remote control switch within 15 cm of the radio, and press the ON/OFF button.

↓

Does the radio buzz noisily?

No → Check the LED (D1) with a multimeter.

Yes ↓

Check the indoor unit signal receiving P. W. B.
If it is good, check the main P. W. B.

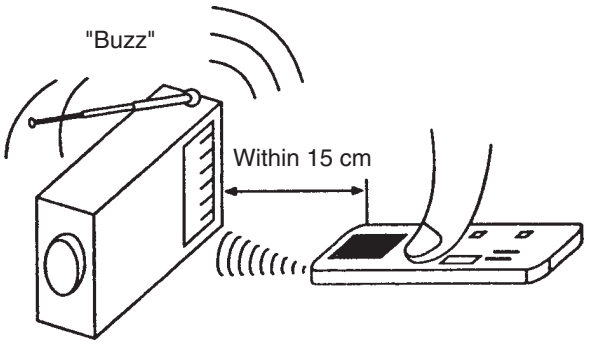

Check functions again.
If it does not work, replace the remote controller.

You can check the remote control switch by other methods as explained below.

Using the test card

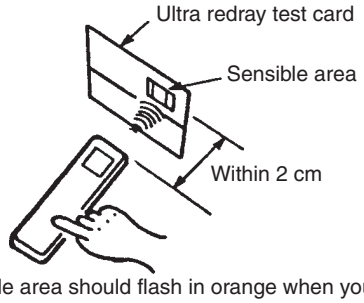

The sensible area should flash in orange when you operate the remote control unit if it is good.

⚠ WARNING ⚠

PRECAUTIONS FOR SERVICING

Be sure that the power switch is turned off or the power cable is disconnected before servicing.

Removing the P.W.B.s.

System Configuration of Outdoor Unit Electrical Parts
The outdoor unit electrical parts consist of two P.W.B. as shown in the figure.

<Main P.W.B. (M board)>
Contains a rectifier circuit and inverter module, their controlling microcomputer and microcomputer peripheral control circuits. The board incorporates high and low current sections.

<Power P.W.B. (P board)>
Contains a switching power circuit, noise filter, power factor improvement circuit, etc.
The switching power circuit supplies power to electronic circuits on the main P.W.B. through CN3.
※ When replacing any P.W.B., disconnect all the cables (including ground wires).

[A. Main P.W.B.]

1 Remove four screws securing the control P.W.B. to the cooling fins, and remove the control P.W.B. from the cooling fins.

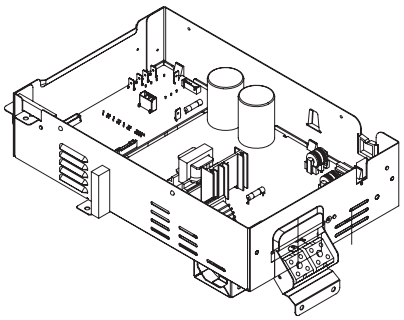

2 Open the support latches and raise the main P.W.B. in the direction of the arrow as shown in Fig. A.

<Direction of the main P.W.B. removal>

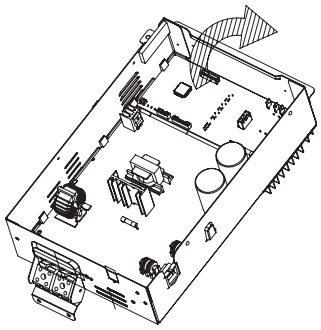

[B. Power P.W.B.]

1 Open the support latches and raise the power P.W.B. in the direction of the arrow as shown in Fig. A.

<Direction of the power P.W.B. removal>

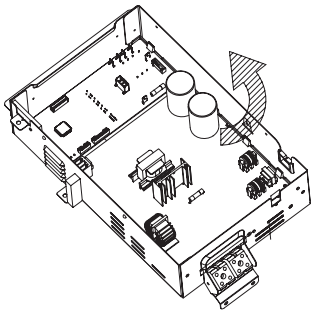

Open these support latches to remove the power P.W.B.

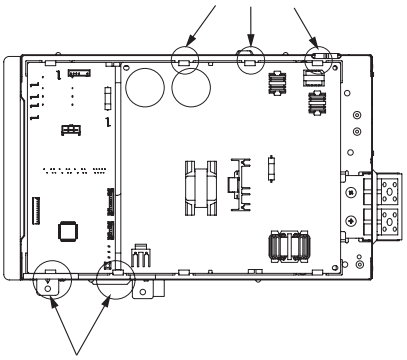

Open these support latches to remove the main P.W.B.

Fig. A

[C. Power Factor Improvement capacitor]
Designed to improve power factor.
To replace the capacitor, remove the power P.W.B. and then:
1. Remove two screws fastening the capacitor seat.
2. Slide the capacitor seat in the direction of the arrow.

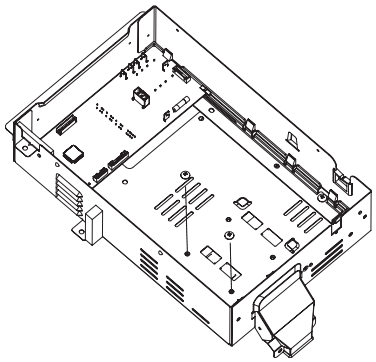

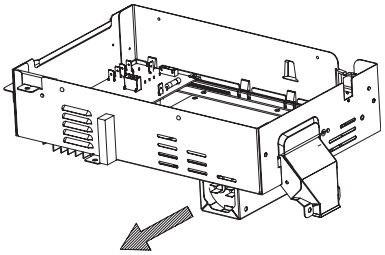

Sliding Direction

CHECKING OUTDOOR UNIT ELECTRICAL PARTS

[No operation or abnormal operation]

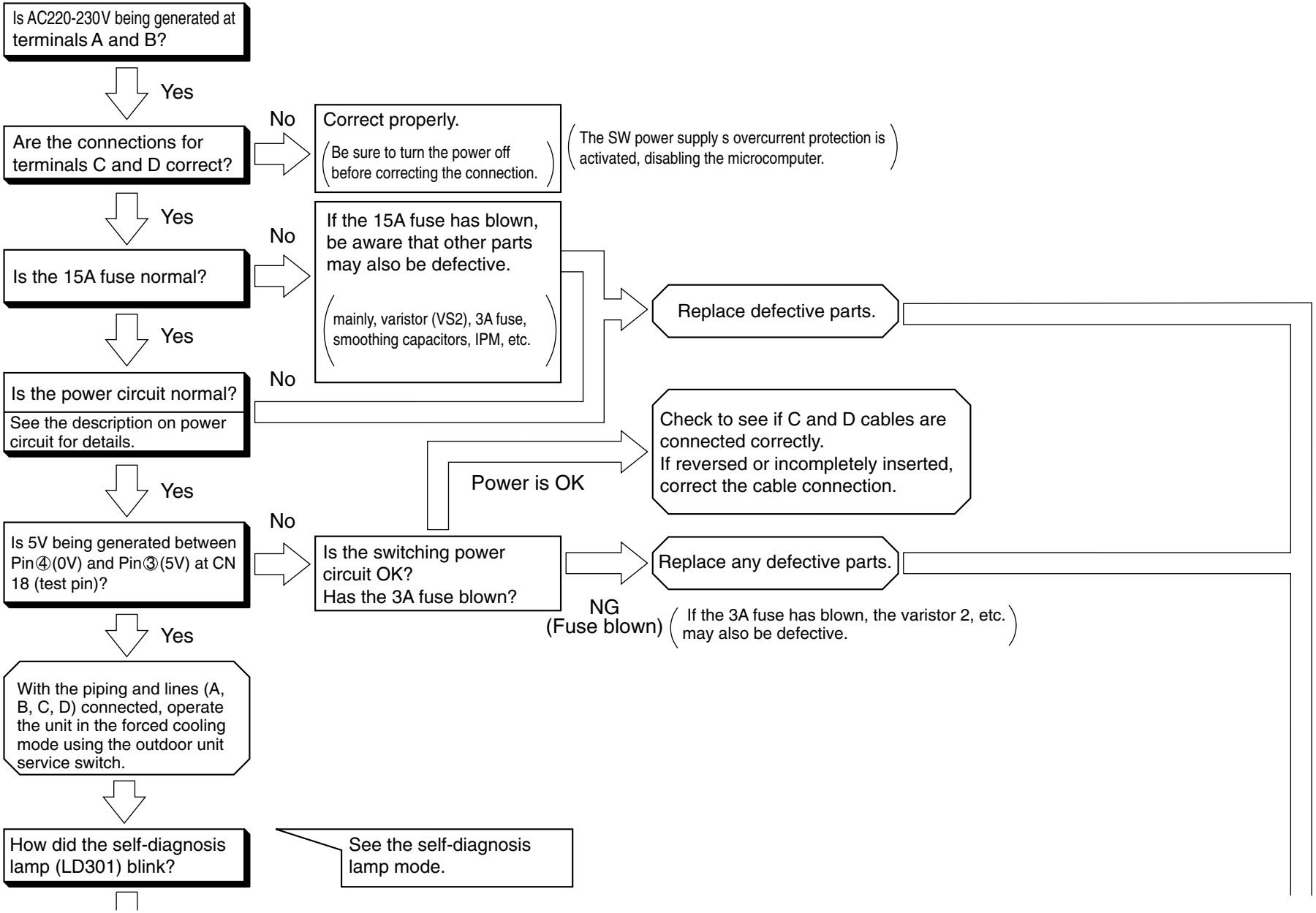

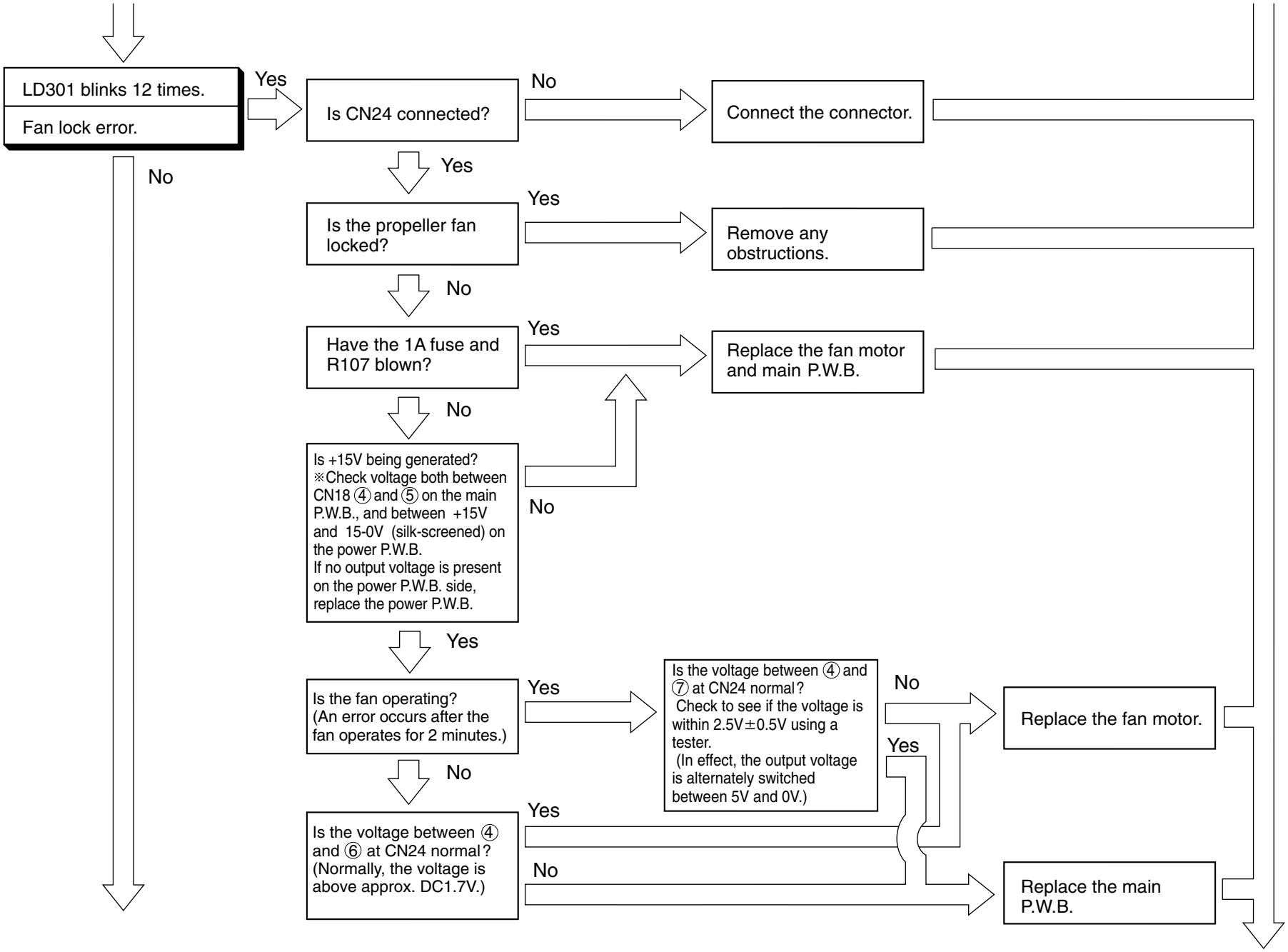
LD301 blinks 12 times.
Fan lock error.
Yes
No
Is CN24 connected?
No
Connect the connector.
Yes
Is the propeller fan locked?
Yes
Remove any obstructions.
No
Have the 1A fuse and R107 blown?
Yes
Replace the fan motor and main P.W.B.
No
Is +15V being generated?
※Check voltage both between CN18 ④ and ⑤ on the main P.W.B., and between +15V and 15-0V (silk-screened) on the power P.W.B.
If no output voltage is present on the power P.W.B. side, replace the power P.W.B.
No
Yes
Is the fan operating?
(An error occurs after the fan operates for 2 minutes.)
Yes
Is the voltage between ④ and ⑦ at CN24 normal?
Check to see if the voltage is within 2.5V±0.5V using a tester.
(In effect, the output voltage is alternately switched between 5V and 0V.)
No
Replace the fan motor.
Yes
No
Is the voltage between ④ and ⑥ at CN24 normal?
(Normally, the voltage is above approx. DC1.7V.)
Yes
No
Replace the main P.W.B.

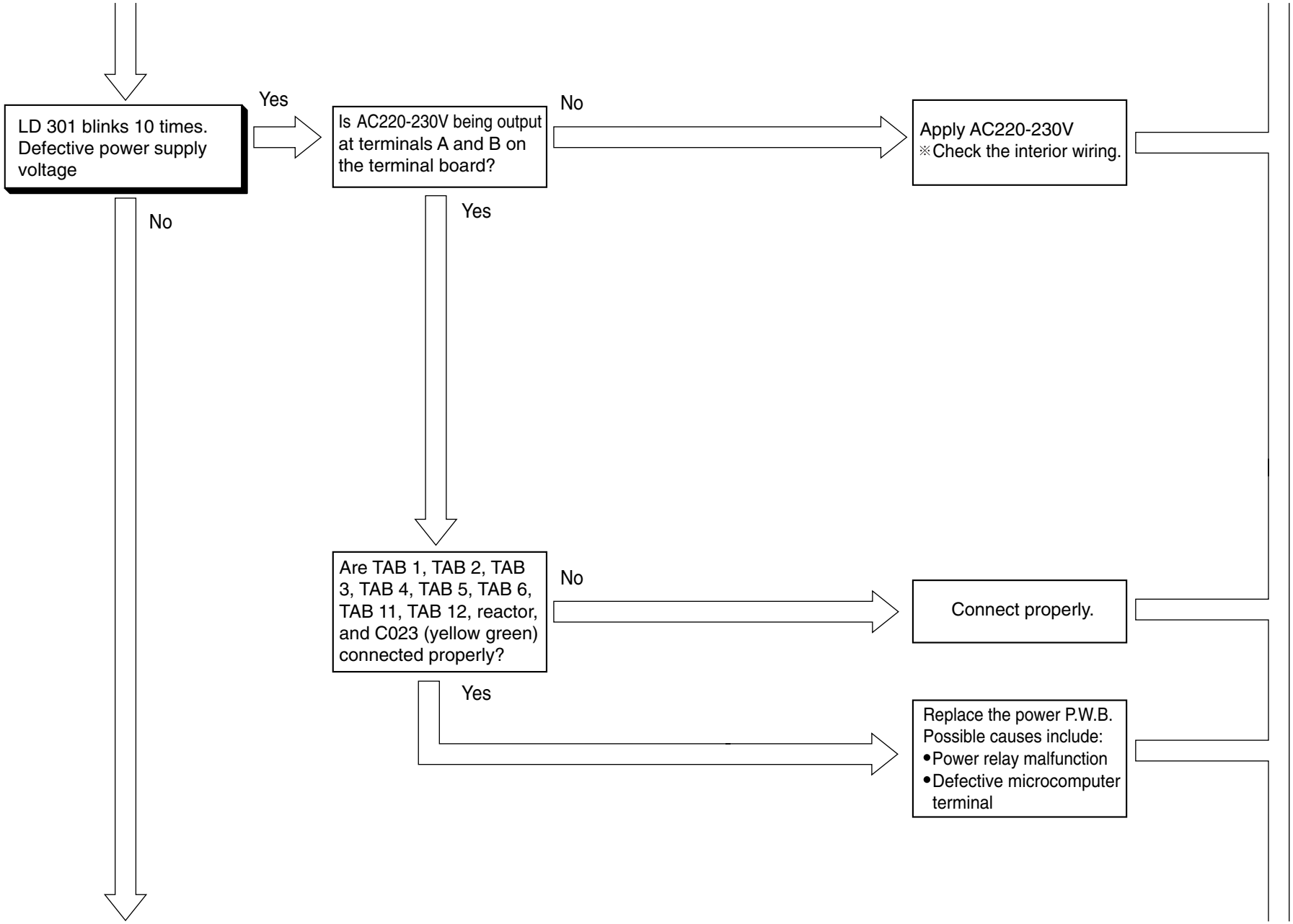
LD 301 blinks 10 times. Defective power supply voltage
Yes
No
Is AC220-230V being output at terminals A and B on the terminal board?
No
Yes
Apply AC220-230V
※Check the interior wiring.
Are TAB 1, TAB 2, TAB 3, TAB 4, TAB 5, TAB 6, TAB 11, TAB 12, reactor, and C023 (yellow green) connected properly?
No
Yes
Connect properly.
Replace the power P.W.B.
Possible causes include:
•Power relay malfunction
•Defective microcomputer terminal

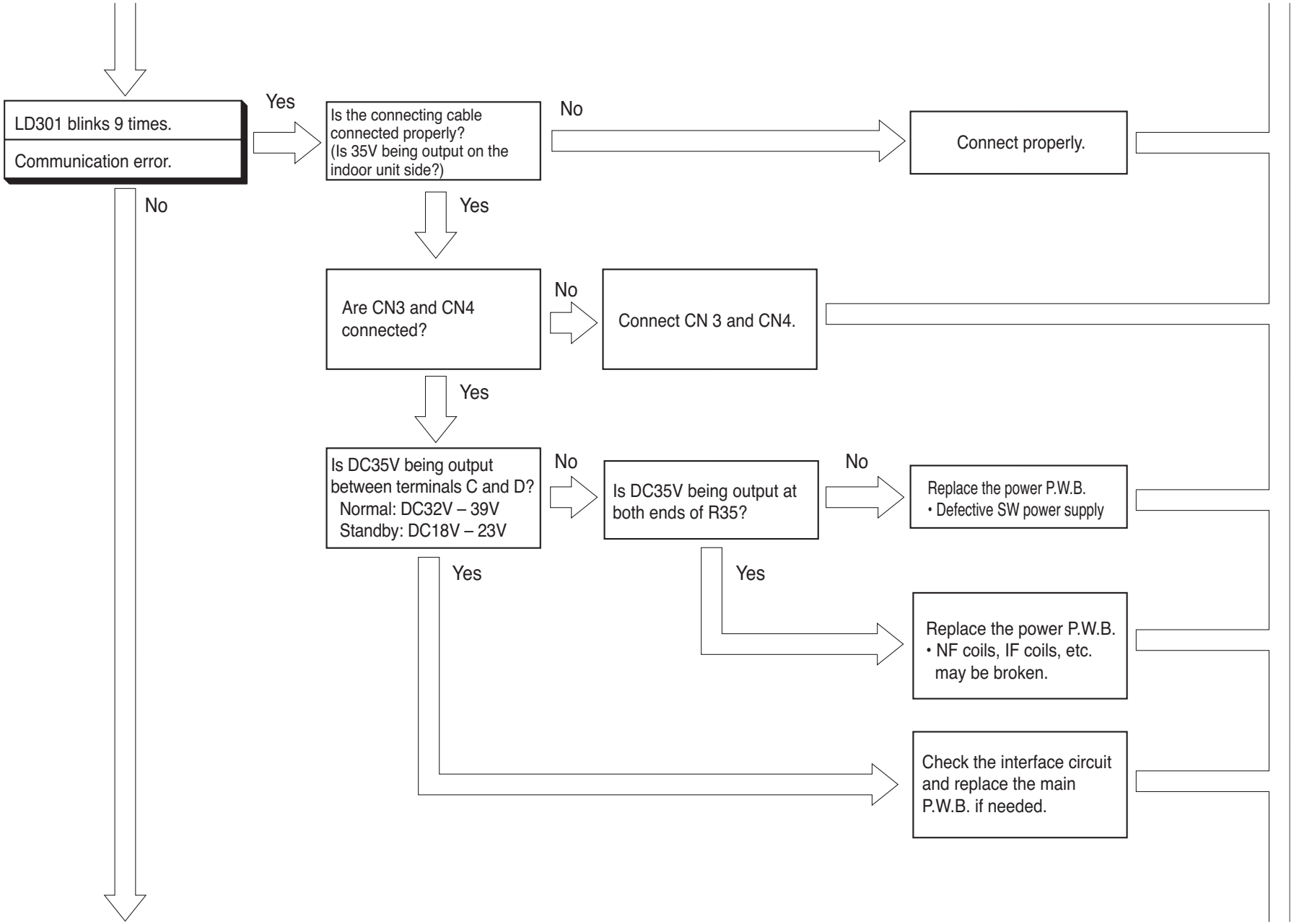
LD301 blinks 9 times.
Communication error.
Yes
No
Is the connecting cable connected properly? (Is 35V being output on the indoor unit side?)
No
Connect properly.
Yes
Are CN3 and CN4 connected?
No
Connect CN 3 and CN4.
Yes
Is DC35V being output between terminals C and D?
Normal: DC32V – 39V
Standby: DC18V – 23V
No
Is DC35V being output at both ends of R35?
No
Replace the power P.W.B.
• Defective SW power supply
Yes
Yes
Replace the power P.W.B.
• NF coils, IF coils, etc. may be broken.
Check the interface circuit and replace the main P.W.B. if needed.

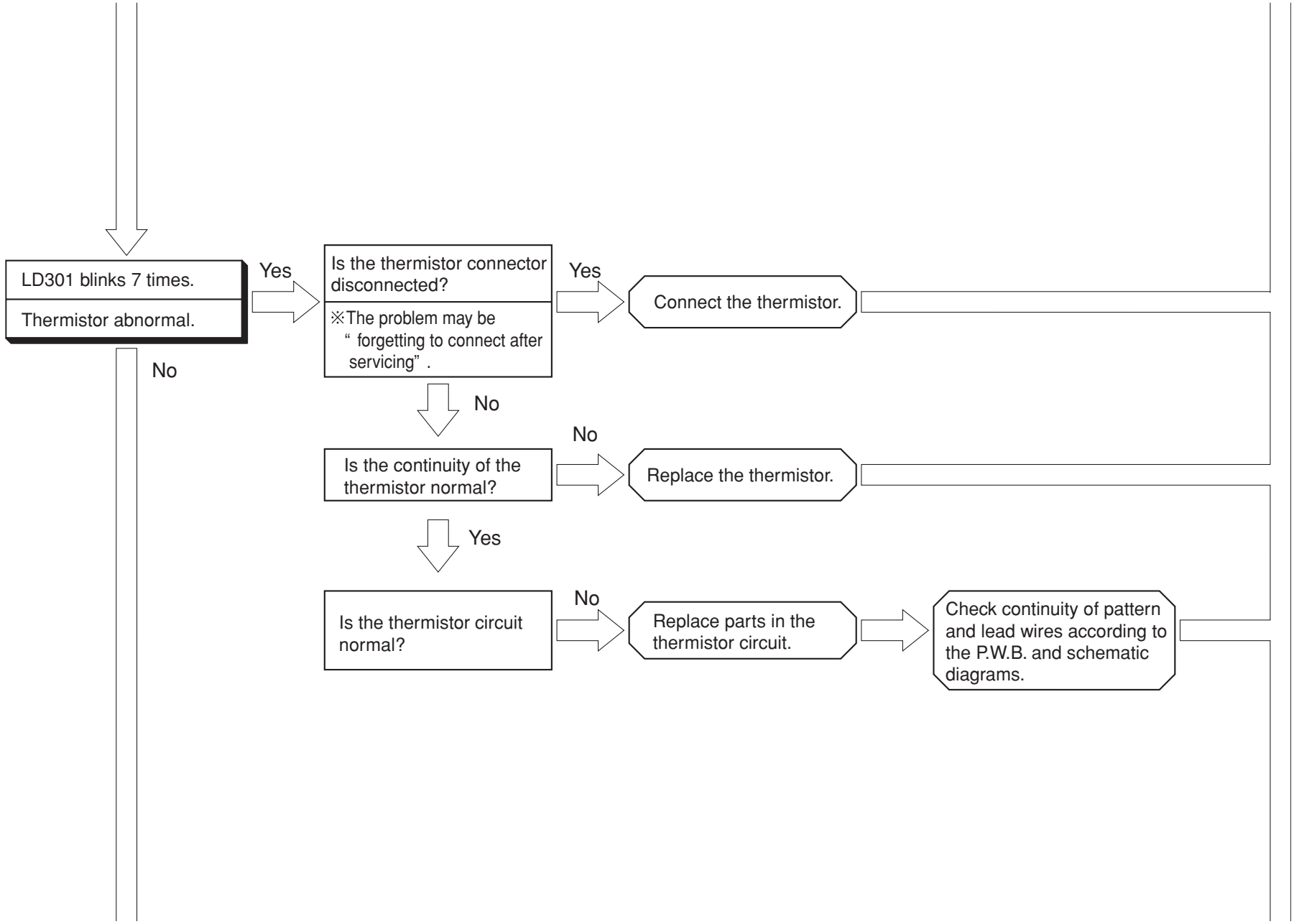
LD301 blinks 7 times.
Thermistor abnormal.
Yes
No
Is the thermistor connector disconnected?
※The problem may be " forgetting to connect after servicing" .
Yes
Connect the thermistor.
No
Is the continuity of the thermistor normal?
No
Replace the thermistor.
Yes
Is the thermistor circuit normal?
No
Replace parts in the thermistor circuit.
Check continuity of pattern and lead wires according to the P.W.B. and schematic diagrams.

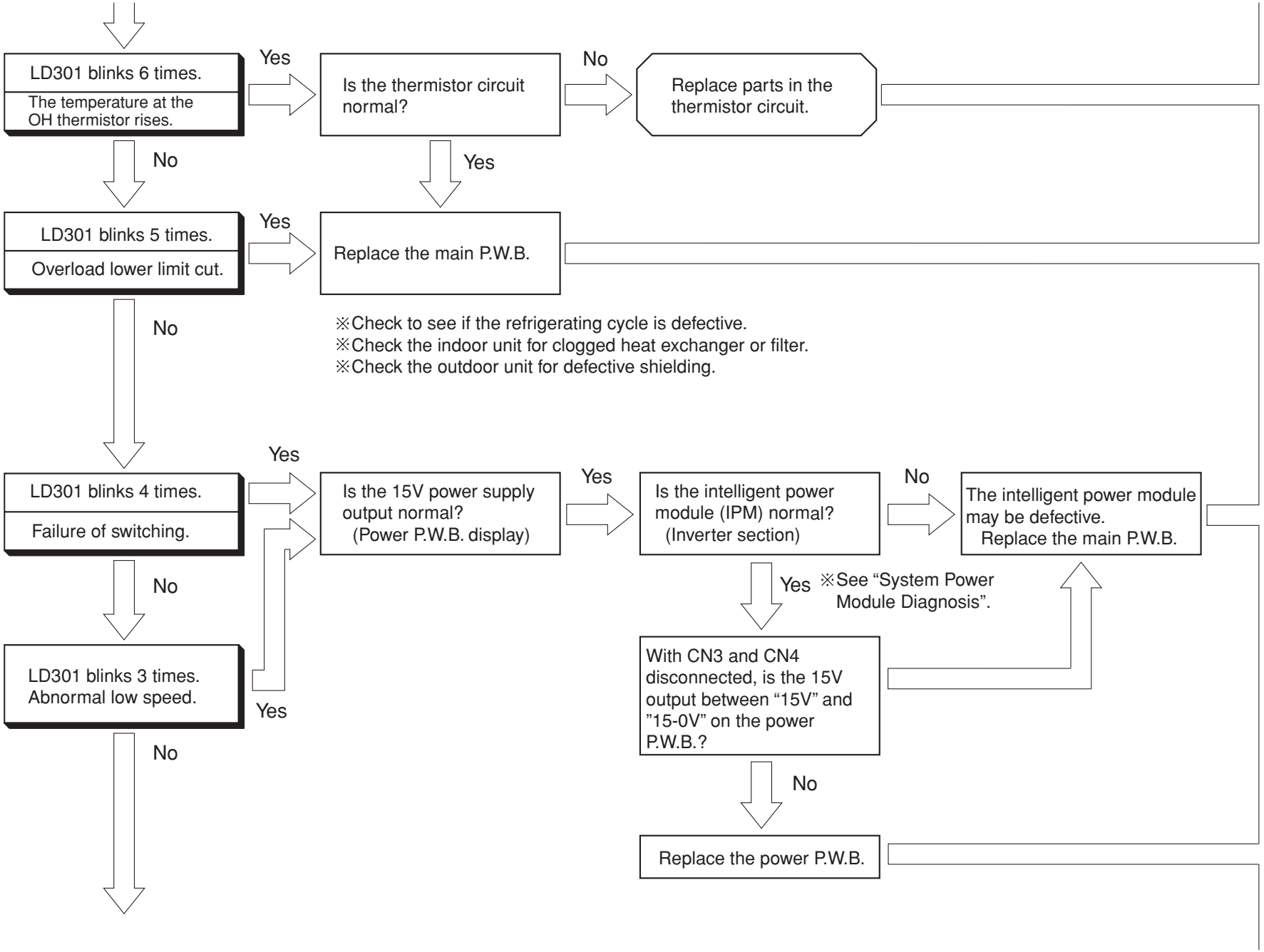
LD301 blinks 6 times.
The temperature at the OH thermistor rises.
Yes
Is the thermistor circuit normal?
No
Replace parts in the thermistor circuit.
No
Yes
LD301 blinks 5 times.
Overload lower limit cut.
Yes
Replace the main P.W.B.
No
※Check to see if the refrigerating cycle is defective.
※Check the indoor unit for clogged heat exchanger or filter.
※Check the outdoor unit for defective shielding.
LD301 blinks 4 times.
Failure of switching.
Yes
Is the 15V power supply output normal? (Power P.W.B. display)
Yes
Is the intelligent power module (IPM) normal? (Inverter section)
No
The intelligent power module may be defective. Replace the main P.W.B.
No
Yes
※See "System Power Module Diagnosis".
LD301 blinks 3 times. Abnormal low speed.
Yes
With CN3 and CN4 disconnected, is the 15V output between "15V" and "15-0V" on the power P.W.B.?
No
Replace the power P.W.B.
No

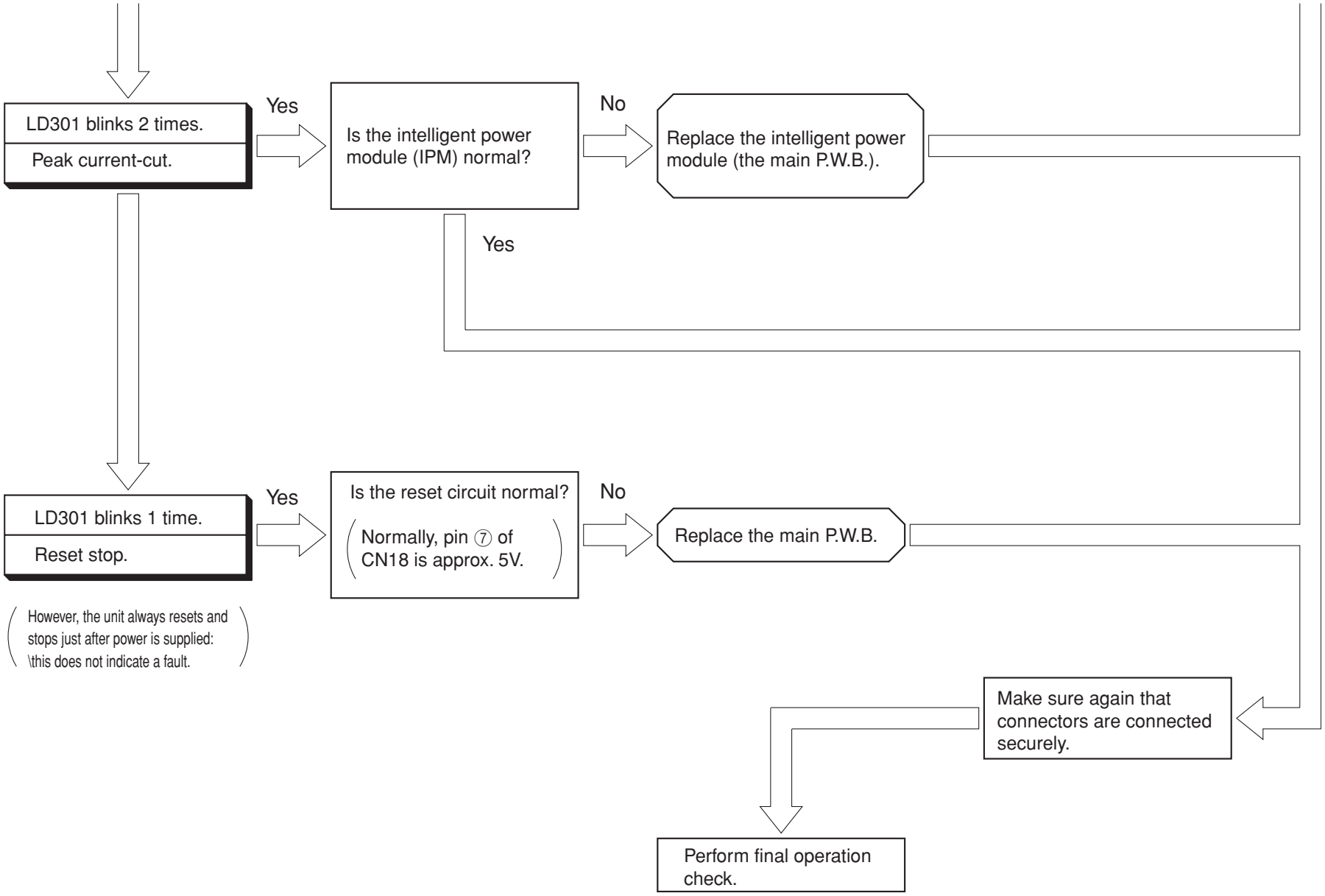
LD301 blinks 2 times.
Peak current-cut.
Yes
Is the intelligent power module (IPM) normal?
No
Replace the intelligent power module (the main P.W.B.).
Yes
LD301 blinks 1 time.
Reset stop.
Yes
Is the reset circuit normal?
Normally, pin ⑦ of CN18 is approx. 5V.
No
Replace the main P.W.B.
However, the unit always resets and stops just after power is supplied: \this does not indicate a fault.
Make sure again that connectors are connected securely.
Perform final operation check.

CHECKING THE REFRIGERATING CYCLE

(JUDGING BETWEEN GAS LEAKAGE AND COMPRESSOR DEFECTIVE)

1. Troubleshooting procedure (No operation, No heating, No cooling)

Connect U,V,W phase leads to the power module again and operate the air conditioner.

Is the self-diagnosis lamp mode as shown on the right?

Lighting mode / Self-diagnosis lamp	Blinks 2 times	Blinks 3 times	Blinks 4 times	Blinks 5 times	Blinks 6 times	Blinks 8times
LD301	Blinking	Blinking	Blinking	Blinking	Blinking	Blinking
Time until the lamp lights	Approx. 10 seconds			Approx. 10 seconds	Within Approx. 30 seconds	Approx. 10 seconds
Possible malfunctioning part	Compressor				Gas leakage	Compressor

Blinking off

YES

Outdoor air temperature (℃)	Charge port pressure MPa(G) {kgf/cm²(G)}
50	2.96 {30.14}
45	2.62 {26.72}
40	2.31 {23.58}
35	2.03 {20.73}
30	1.78 {18.14}
25	1.55 {15.79}
20	1.34 {13.66}
15	1.15 {11.74}
10	0.98 {10.02}
5	0.83 { 8.48}
0	0.70 { 7.10}
−5	0.58 { 5.89}
−10	0.47 { 4.81}

(R410 A)
The values above are the theoretical ones.

Stop to operate and check the gas pressure in balancing mode.

Normal

● Checking the IPM (main P.W.B.)

When the self-diagnosis lamp lights in the same condition as above.

Error (Gas leaking)

Gas leaks.
Repair and seal refrigerant.

The compressor is defective. Replace it and seal refrigerant.
(If the compressor checker for an inverter type air conditioner is available, re-check using it.)

Perform a final check of operation.

HOW TO OPERATE USING THE SERVICE SWITCH THE OUTDOOR UNIT

MODEL RAC-14EH1

1. Turn off the power switch.
2. Remove the electrical box cover.
3. Turn on the power switch.
4. After waiting for 30 seconds, push the service switch for a second.

LD303 (red) will light and the unit will operate in the forced cooling mode at this time.

Never operate the unit for more than 5 minutes.

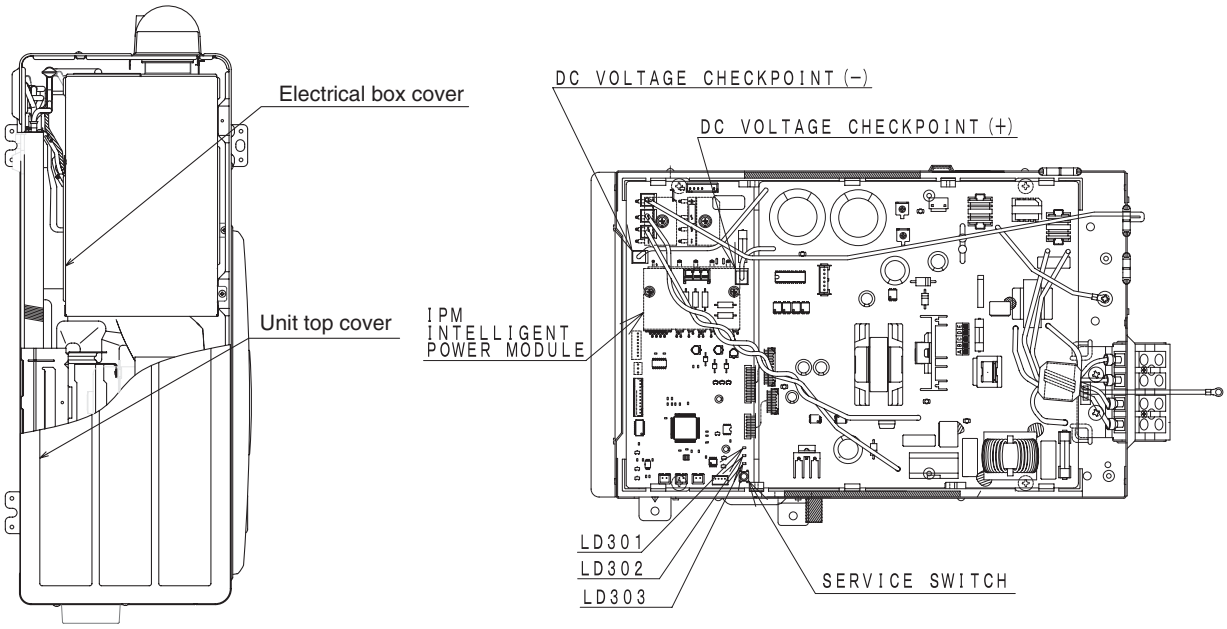

(Cautions)
(1) If interface signal (DC 35V) terminals C and D are not connected when the outdoor unit is in forced cool mode, the outdoor unit defect indicator (LD301) will blink 9 times during operation to indicate communication error.
(2) If checking is done with the compressor connector disconnected, the unit will stop and LD301 will blink 4 times.

Be sure to push the service switch for a second again to stop the forced cool operation.

HOW TO OPERATE THE OUTDOOR UNIT INDEPENDENTLY

1. Connect the large dia. pipe side and small dia. pipe side service valve using a pipe.

Connect the small diameter service value and the large diameter service valve using the reducing union and copper pipe as shown on the right.

Charge refrigerant of 300g after vacuuming (※1)

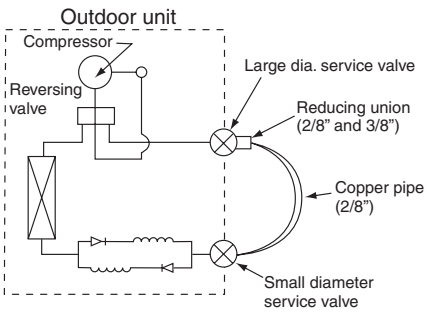

Parts to be prepared

(1) Reducing union
2/8" (6.35 mm)
3/8" (9.52 mm)
(2) Copper pipe (2/8" and 3/8")

Do not operate for more than 5 minutes

The operation method is the same as "How to operate using the connector to servicing the outdoor unit".
※1 The charging amount of 200g is equivalent to the load in normal operation.

IPM (Intelligent Power Module) DIAGNOSIS

	SSM1001MA
Circuit diagram of the device	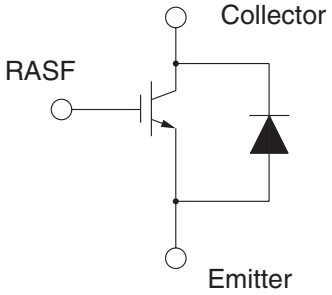
Circuit diagram of the module	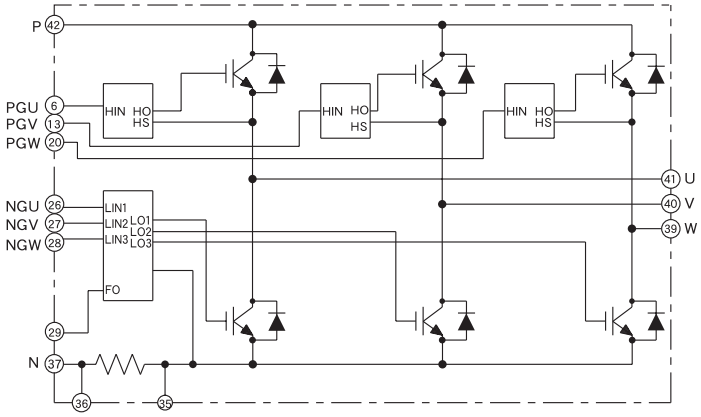
Terminals symbol mark of the module * See next page for measuring value using multimeter	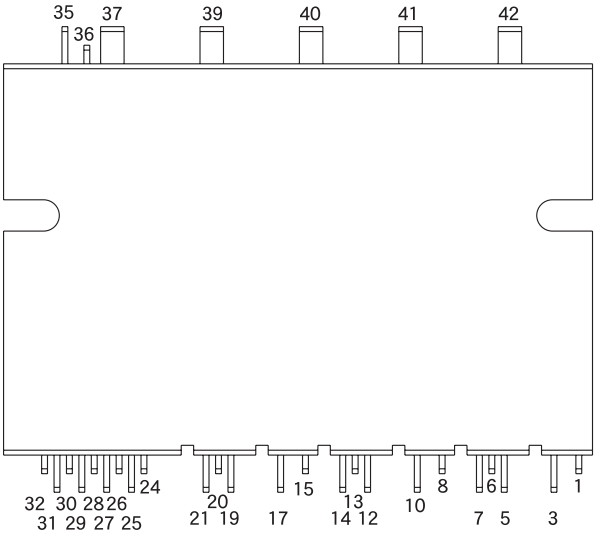 6:PGU 29:Fail signal 13:PGV 35:INV0V 20:PGW 36 :0V 26:NGU 37:N 27:NGV 39:W 28:NGW 40:V 41:U 42 :P

Diagnosis procedure of IPM using multimeter.

<Inverter section>

Set the multimeter function to resistance x 100.If the multimeter dose not have x 100 range, please select its range from x 1 to x 100.

The judgment shall be OK. When the measurement was high resistance.

(Please consider that the probe polarity will be reserve when use a digital mulimeter due to its battery connection inside)

<note>

Sometimes, it may misjudge as OK because of low conductivity when power module was damaged as disconnect mode. In this case, please check the resistance by reversing the probe polarity and consider OK when it was low resistance. Also, it is OK if the resistance was as same as the other phases (U,V,W).

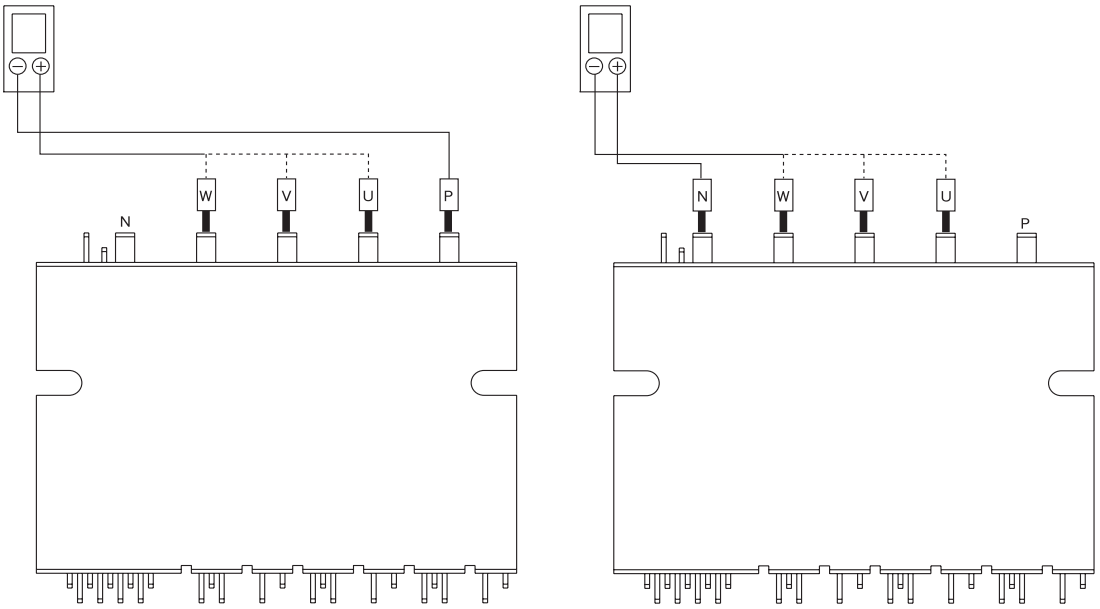

<Driver circuit (internal IC)>

15V will not be generated when the internal IC has malfunctioned.

To find the malfunction either the power supply of power P.W.B or internal IC, please follow the procedure following.

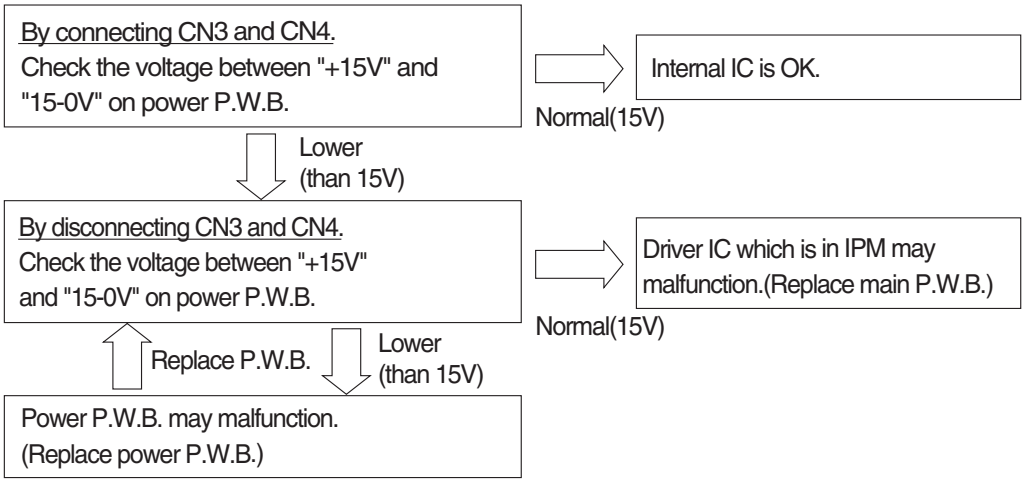

Procedure for Disassembly and Reassembly

INDOOR UNIT RAS-14EH1

1. Front Panel

(1) Pull up the washable panel by holding it at both lower sides with both hands.

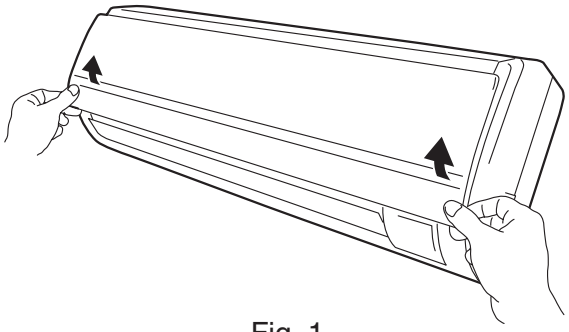

Fig. 1

(2) When the panel opens full, push the inner part of the right arm into the inside and pull the panel forward while closing it gradually.

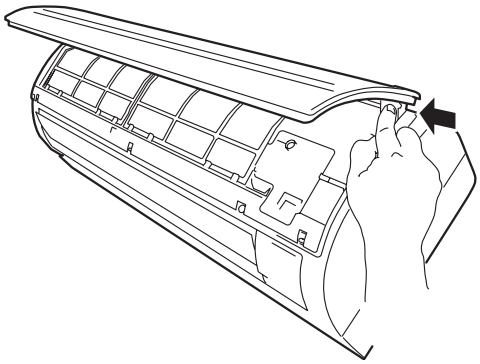

Fig. 2

2. Front cover

(1) After removing two screws, pull the center of the front cover forward and release the claws.

(2) Hold the front cover at both lower sides and pull them forward to remove.

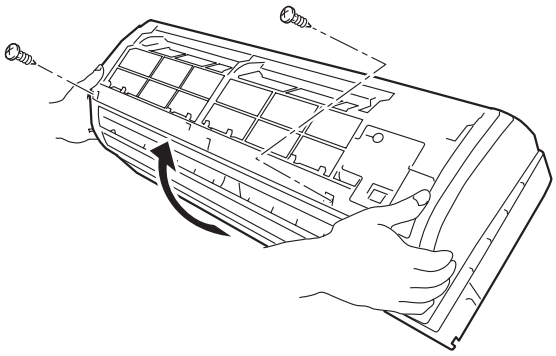

Fig. 3

3. Control P.W.B. and Indicating P.W.B.

(1) Remove each connector from the lead wire.

(2) Remove the four P.W.B. supports from the control P.W.B.

(3) Pull the support hook at the upper side of the indication lamp of the indicating P.W.B. and pull out the P.W.B. forward.

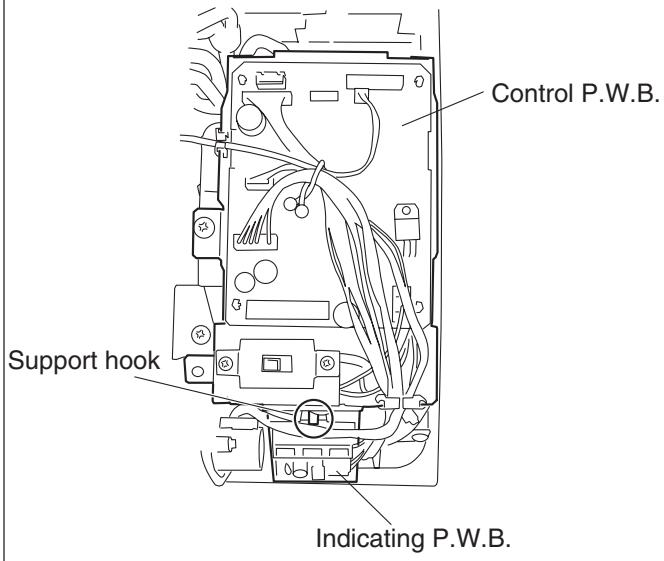

Fig. 4

4. Tangential air flow fan and fan motor

(1) Remove two screws locking the drain pan.

(2) Press to lower the hook at the center of the unit a little and pull the claw forward to remove the drain pan.

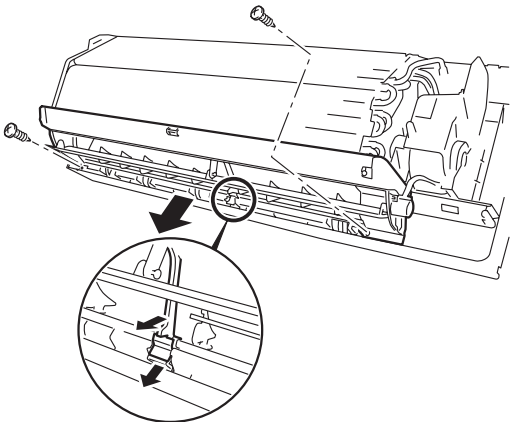

Fig. 5

(3) Remove the screws from the upper and lower bearing covers.

(4) Remove the locking hook of the lower bearing cover from the Cabinet.

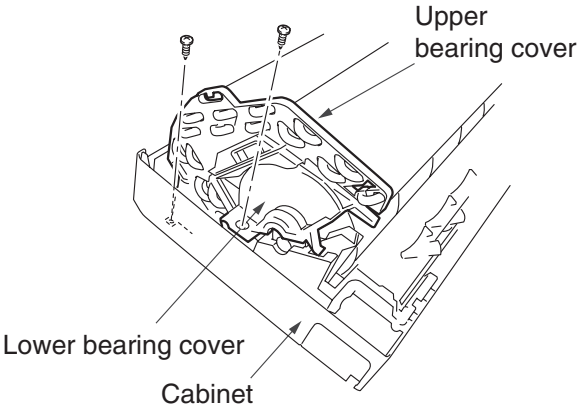

Fig. 6

(5) Remove two lock screws from the fan motor holder.

(6) Pull up the evaporator by holding it at the lower side. Insert a screwdriver through the space between the evaporator and drain chute and loosen the fan lock screw to remove the fan and fan motor.

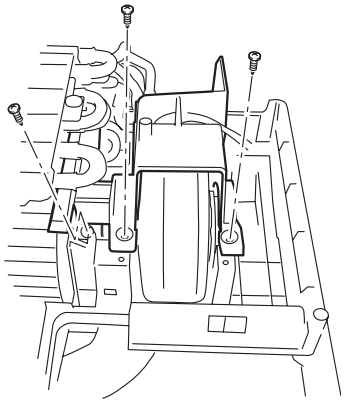

Fig. 7

OUTDOOR UNIT RAC-14EH1

1. Electrical parts

(1) Remove the service value cover lock screws and lower the cover to remove it.

(2) Remove the top cover lock screw and raise the cover to remove it.

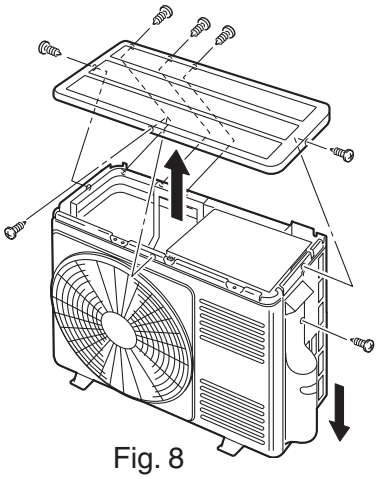

Fig. 8

(3) Remove the front cover lock screw.

(4) Lower the right side of the front cover and pull it forward. Then, remove the cover from the hook.

(5) Pull the right side of the front cover a little and pull up the left side to remove it from the hook.

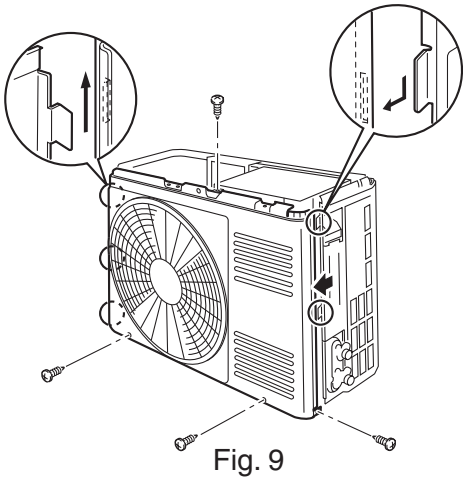

Fig. 9

(6) Remove each connector and earth cable from the lead wire.

(7) Remove four lock screws from the main P.W.B. and pull two support hooks at the front side to remove the P.W.B.

(8) Pull three support hooks at the rear side of the Power P.W.B. to remove the P.W.B.

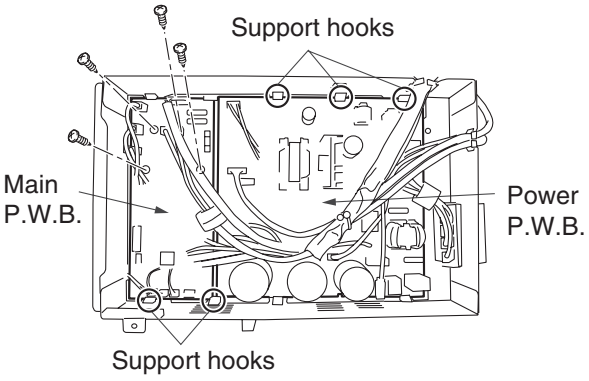

Fig. 10

PARTS LIST AND DIAGRAM

INDOOR UNIT
MODEL: RAS-14EH1

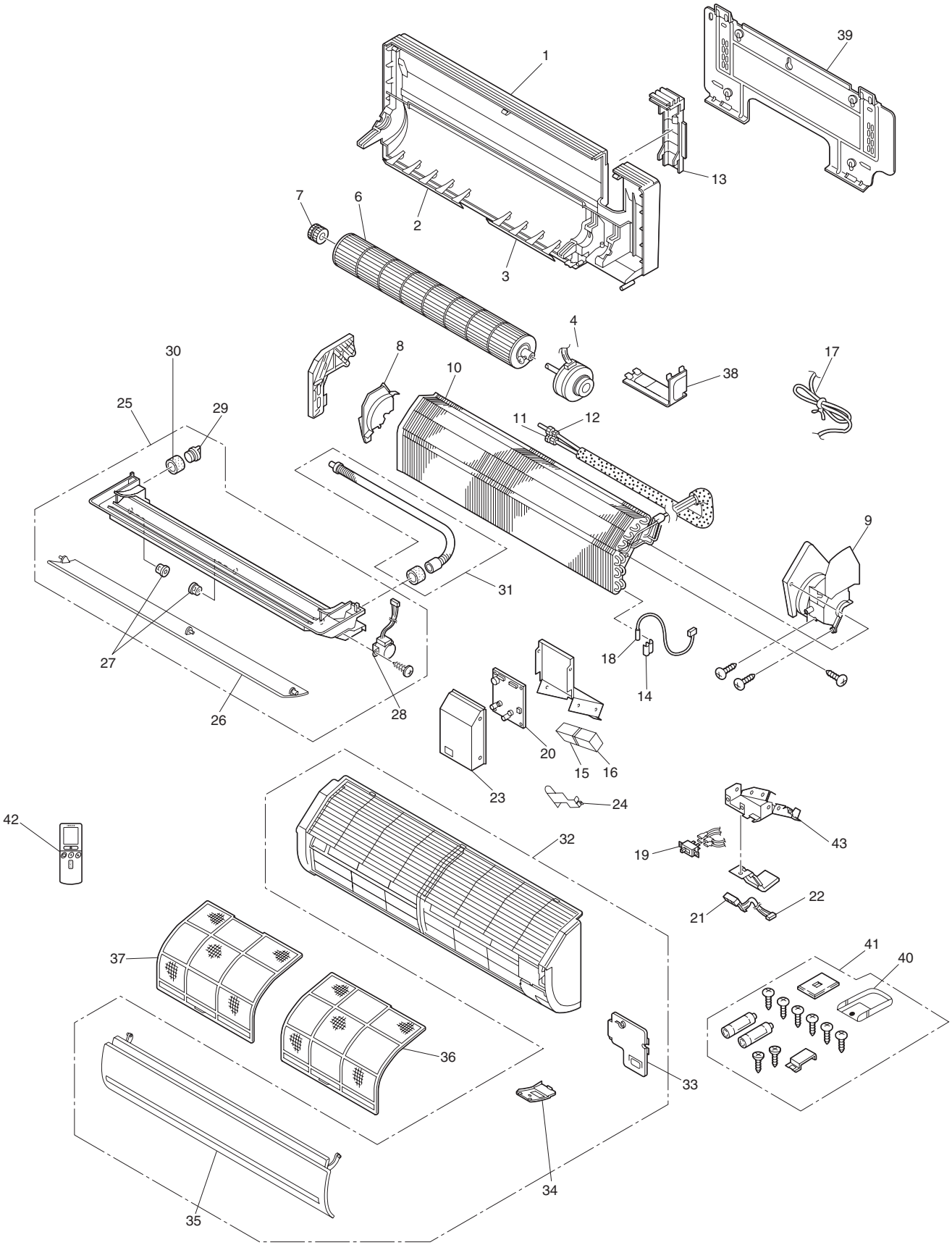

OUTDOOR UNIT
MODEL: RAC-14EH1

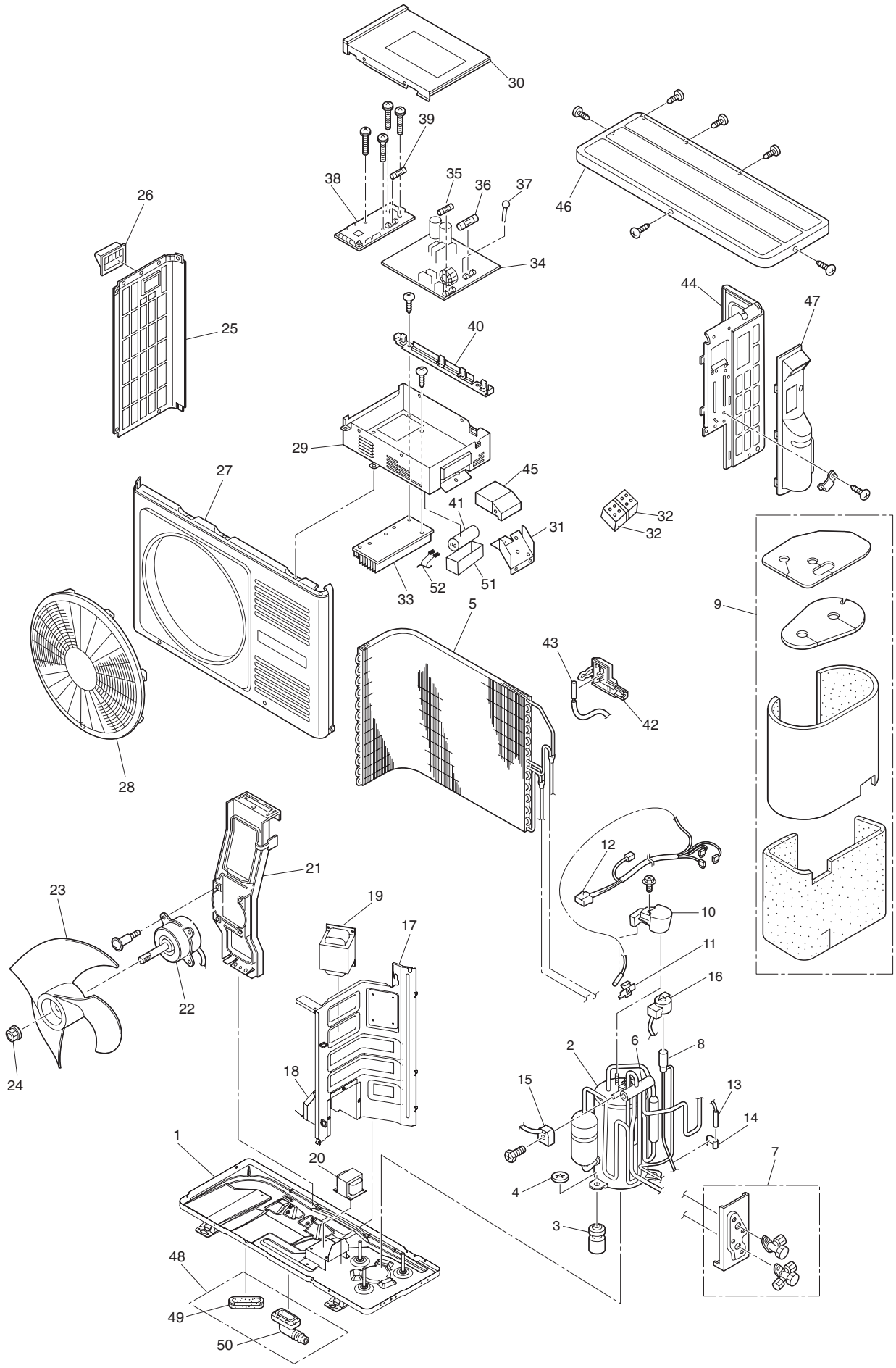

HITACHI

RAS-14EH1/RAC-14EH1 SM0774