L-88

Multimedia Enhanced

Whirlpool CORPORATION

TECHNICAL EDUCATION

HybridCare™ Duet® Dryer with Heat Pump Technology

WED99HEDW0, WED99HEDC0

JOB AID W10764068

FORWARD

This Whirlpool Job Aid, "HybridCare™ Duet® Dryer with Heat Pump Technology" (Part No. W10764068), provides the In-Home Service Professional with information on the installation, operation, and service of the “Whirlpool HybridCare™ Dryer.” For specific operating information on the model being serviced, refer to the “Use and Care Guide” or “Tech Sheet” provided with the dryer.

The Wiring Diagram used in this Job Aid is typical and should be used for training purposes only. Always use the Wiring Diagram supplied with the product when servicing the dryer.

GOALS AND OBJECTIVES

The goal of this Job Aid is to provide information that will enable the In-Home Service Professional to properly diagnose malfunctions and repair the "HybridCare™ Dryer with Heat Pump Technology.”

The objectives of this Job Aid are to:

- Understand and follow proper safety precautions.
- Successfully troubleshoot and diagnose malfunctions.
- Successfully perform necessary repairs.
- Successfully return the dryer to its proper operational status.

WHIRLPOOL CORPORATION assumes no responsibility for any repairs made on our products by anyone other than authorized In-Home Service Professionals.

TABLE OF CONTENTS

HybridCare™ Dryer with Heat Pump Technology

SECTION 1 — GENERAL INFORMATION

SECTION 2 — OPERATION

SECTION 3 — INSTALLATION

SECTION 4 — COMPONENT ACCESS (MULTIMEDIA ENHANCED)

Video Available *Look for this ICON throughout Section 4*

SECTION 4 — COMPONENT ACCESS (CONTINUED)

SECTION 5 — DIAGNOSTICS & TROUBLESHOOTING

SECTION 6 — TESTING

Section 1: General Information

This section provides general safety, parts, and information for the “HybridCare™ Dryer with Heat Pump Technology.”

- Dryer Safety
- General Theory of Operation
- Model/Serial Number Location
- Tech Sheet Location
- Model & Serial Number Nomenclature
- Product Specifications
- Notes

Dryer Safety

Your safety and the safety of others are very important.

We have provided many important safety messages in this manual and on your appliance. Always read and obey all safety messages.

This is the safety alert symbol.

This symbol alerts you to potential hazards that can kill or hurt you and others.

All safety messages will follow the safety alert symbol and either the word “DANGER” or “WARNING.” These words mean:

⚠DANGER — **You can be killed or seriously injured if you don't immediately follow instructions.**

⚠WARNING — **You can be killed or seriously injured if you don't follow instructions.**

All safety messages will tell you what the potential hazard is, tell you how to reduce the chance of injury, and tell you what can happen if the instructions are not followed.

WARNING - “Risk of Fire”

- **Clothes dryer installation must be performed by a qualified installer.**
- **Install the clothes dryer according to the manufacturer’s instructions and local codes.**
- **To reduce the risk of severe injury or death, follow all installation instructions.**
- **Save these instructions.**

Certain internal parts are intentionally not grounded and may present a risk of electric shock only during servicing.

Service Personnel – Do not contact the thermostat bracket while the appliance is energized.

IMPORTANT: When discarding or storing your old clothes dryer, remove the door.

General Theory of Operation

HybridCare™ Heat Pump Technology

A typical dryer uses large amounts of energy; this dryer consumes a fraction of the energy by recycling and reclaiming heat. The HybridCare™ dryer is a ventless heat pump dryer that uses a refrigeration system to dry and recycle the same air. The laundry is dried with low temperatures; therefore it may feel cooler than expected during and after the drying process.

The heat pump dryer's heating phase is longer than in traditional dryers. The first 10 to 20 minutes use little or no heat during the drying time. If possible, do not open the dryer door during the process as heat can escape from the drum and can make longer drying times.

Benefits of HybridCare™ Heat Pump

- ENERGY: Regenerates energy to reduce overall energy consumption. Capability to use less heat than vented dryer.
- PERFORMANCE: Three available modes allow flexibility to manage drying performance and energy savings.
- VENTLESS DESIGN: Allows installation in more locations throughout the home.

New Sounds from HybridCare™ Heat Pump

- Dryer runs on a compressor like your refrigerator and you may notice a hum from the compressor.
- The water from wet clothes is pumped out to your drain. You may notice a gurgling sound occasionally.

HybridCare™ Heat Pump Dryer Heating System

Heating System - instead of two electric heaters, the HybridCare™ dryer substitutes the compressor (sealed system) for one of the heaters. The Compressor and Heater act very similarly as the two heaters did in the Whirlpool direct drive dryer. Previously, each heater was connected to its own heater relay. In HybridCare™, the compressor is controlled by one of the relays.

Sealed System Theory of Operation:

Mechanical heat pumps exploit the physical properties of a volatile evaporating and condensing fluid known as a refrigerant. The heat pump compresses the refrigerant to make it hotter on the side to be warmed, and releases the pressure at the side where heat is absorbed. Refer to the diagram below for the following operations:

1. The refrigerant (R134a), in its gaseous state, is pressurized (heated) and circulated through the sealed system by the compressor.
2. The now hot and highly pressurized gas is sent to the condenser section of the heat exchanger until it condenses into a high pressure, moderate temperature liquid. The condenser heats up the process air which will be sent to the drum.
3. The condensed refrigerant then continues to the post condenser—with the help of the auxiliary fan—begins the cooling of the refrigerant.
4. The refrigerant then passes through a pressure-lowering device such as an expansion valve, or in this application, a capillary tube further decreasing the temperature of the refrigerant.
5. The low pressure liquid refrigerant then enters the evaporator section of the heat exchanger, in which the fluid absorbs heat, boils and is converted to a gas. This is accomplished when the fan blows the hot process air (from the drum) across the evaporator, which also helps to remove moisture from the humid process air. The refrigerant then returns to the compressor and the cycle is repeated.

...continued on next page

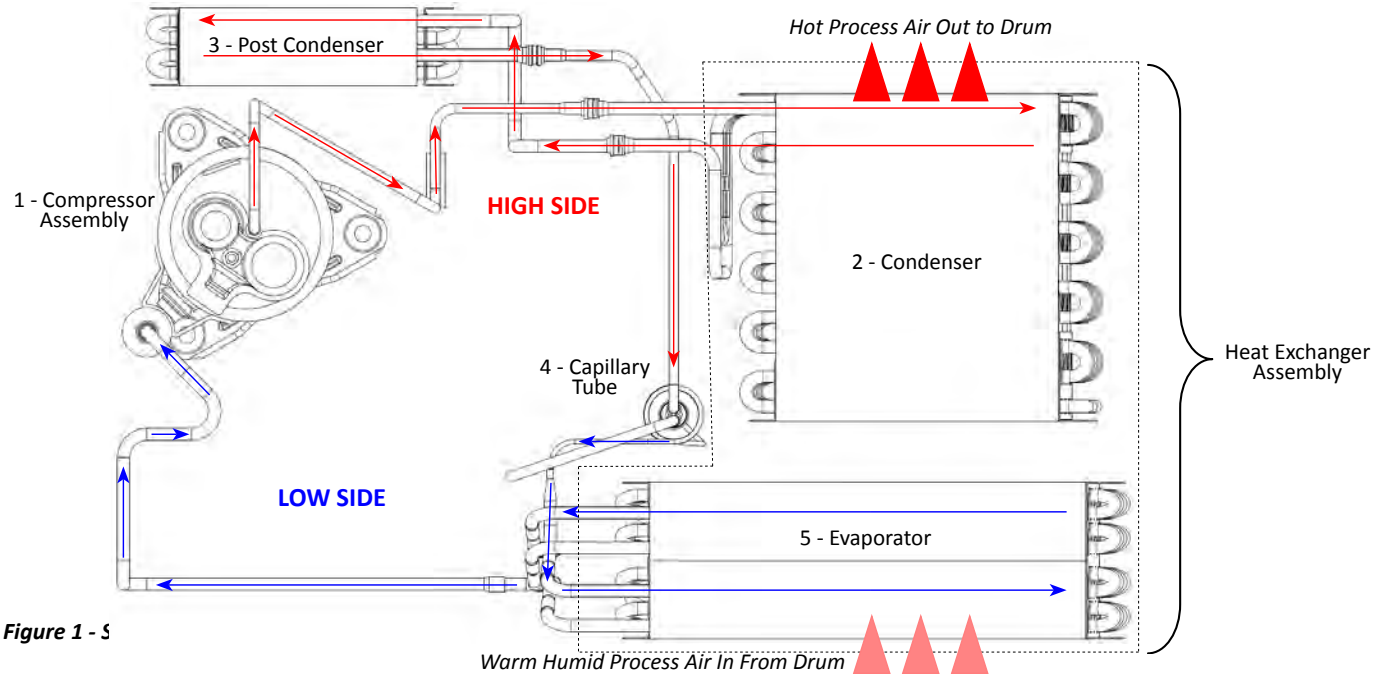

Figure 1 - S

General Theory of Operation (continued)

HybridCare™ Heat Pump Dryer New Components

Relay Expansion Board (REX) – a circuit board has been added (located next to the CCU) to switch on and off the auxiliary fan that is used to cool the post condenser and compressor electronics.

Auxiliary Fan – used for cooling the compressor components and begins the cooling of the refrigerant in the post condenser.

Drain Pump – to drain water in the sump collected from the evaporator. The drain pump is connected to P8 on the CCU, (which was used previously to energize the spray valve).

Float Switch – has two positions. The first (lower) position signals the CCU to activate the drain pump to remove water from the sump. The second (full) position signals the CCU to stop the dryer and generates the F9E1 error code (drain system error).

Reed Lint Switch – is a magnetic reed switch that signals the CCU when the Evaporator Lint Filter is not installed. The dryer will not operate if the Evaporator Lint Filter is not detected.

HybridCare™ Heat Pump Dryer Block Diagram

The HybridCare™ Dryer is not unlike its predecessor—the Whirlpool Duet direct-drive dryer (aka Alpha). Most of the components used in the Whirlpool direct drive dryer are also used in the new HybridCare™ dryer. Think of the compressor as the second heater.

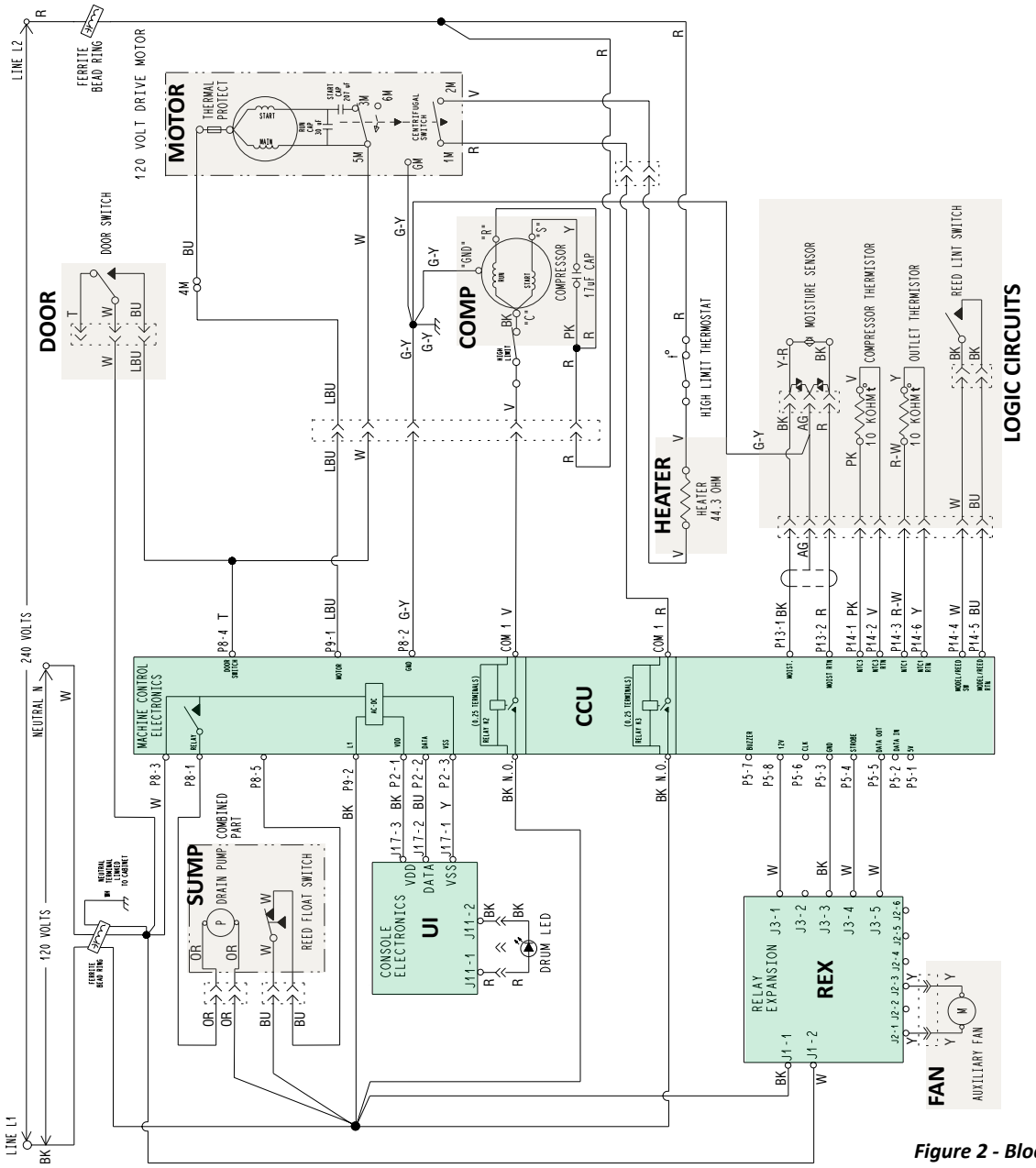

Figure 2 - Block Diagram

Model & Serial Number Location

Figure 3 - Model / Serial Number

Tech Sheet Location

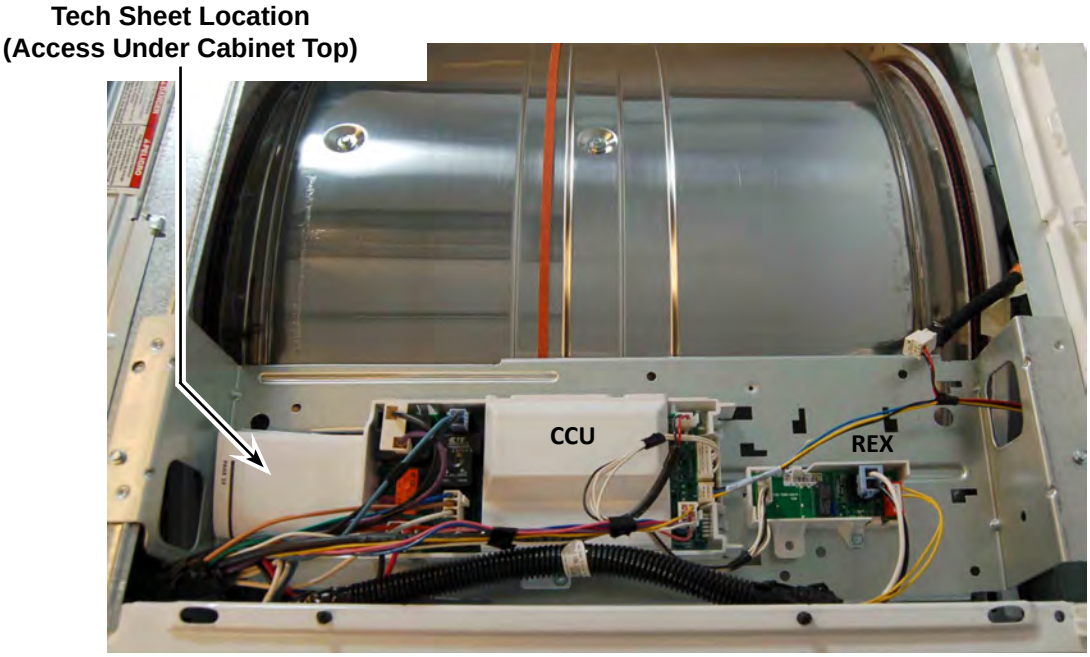

Figure 4 - Tech Sheet Location

Model & Serial Number Nomenclature

MODEL NUMBER W E D 99HE D W 0

INTERNATIONAL SALES OR MARKETING CHANNEL

BRAND
W = Whirlpool; M = Maytag

ACCESS
E = Electric Dryer; G = Gas Dryer

PRODUCT
W = Washer; D = Dryer

FEATURE SET
99 = Sealed System Hybrid Dryer
HE = High Efficiency

YEAR OF INTRODUCTION
D = 2014; E = 2015

COLOR CODE
W = White; C = Chrome Shadow

ENGINEERING CHANGE
0 = Basic Release; 1 = First Revision; 2 = Second Revision

SERIAL NUMBER M 4 25 10000

PRODUCTION SITE
M = MARION, OH

YEAR OF PRODUCTION
4 = 2014; 5 = 2015

WEEK OF PRODUCTION

PRODUCT SEQUENCE NUMBER

Product Specifications

ELECTRICAL	
Line Voltage :	240 VAC (200-260) Elect. Dryer, 2-phase, “optimized” 208 VAC (176-229) Elect. Dryer, 3-phase, “less optimized”
Frequency :	58 to 62 Hz (60 Hz nominal)
Amps :	(ELECT) 30 Amp Service
Operating Temperature Range :	40 to 105°F (5 to 40°C)
PRIMARY FEATURES	
Capacity :	7.3 Cu. Ft.
Control Panel :	Capacitive Touch / Electronic
Drum Material :	Stainless Steel
Drum Design :	Quad Baffles
Energy Star® Qualified :	Yes
Cycles :	(8) Normal, Bulky, Heavy Duty, Towels, Casual, Delicates, Quick Dry, Timed Dry
Temperatures :	(4) Extra Low, Low, Medium, High
Dryness Levels :	(3) Less, Normal, More
Filters :	Primary Lint Filter, HybridCare™ Filter
Lint Filter Indicator :	Yes
Automatic Dry Control :	Yes
Cycle Time Remaining :	Yes
Advanced Moisture Sensor :	Yes
INSTALLATION CONSIDERATIONS	
Venting Direction :	Ventless
Water Drain :	Standpipe or laundry sink
OPTIONS	
HybridCare™ Energy Options :	Speed, Balanced, Eco
Damp Dry Signal :	Beeps when load is damp
Drum Light :	Turn drum light on or off
Cycle Signal :	Turn signal indicating end of cycle on or off
Control Lock :	Locks the controls
Door Reversal	Yes (see Installation section)
DIMENSIONS	
Height :	39” (99.1 cm) Max
Width :	27” (68.6 cm)
Depth :	31” (78.7 cm)
Depth with door open :	51 ¾” (1314.45 mm)
Gross Weight :	200 lbs. (90.7 kg)

Notes

Section 2: Operation

This section provides operational use and care information for the “HybridCare™ Dryer with Heat Pump Technology.”

- Control Panel and Features
- Cycle Guide - Automatic Cycles
- Cycle Guide - Timed Dry Cycles
- Using the Dryer
- Cycle Status Indicators
- Additional Features
- Dryer Care
- Troubleshooting
- Notes

Control Panel and Features

NOTE: The control panel features a sensitive surface that responds to a light touch of your finger. To ensure your selections are registered, touch the control panel with your finger tip, not your fingernail. When selecting a setting or option, simply touch its name.

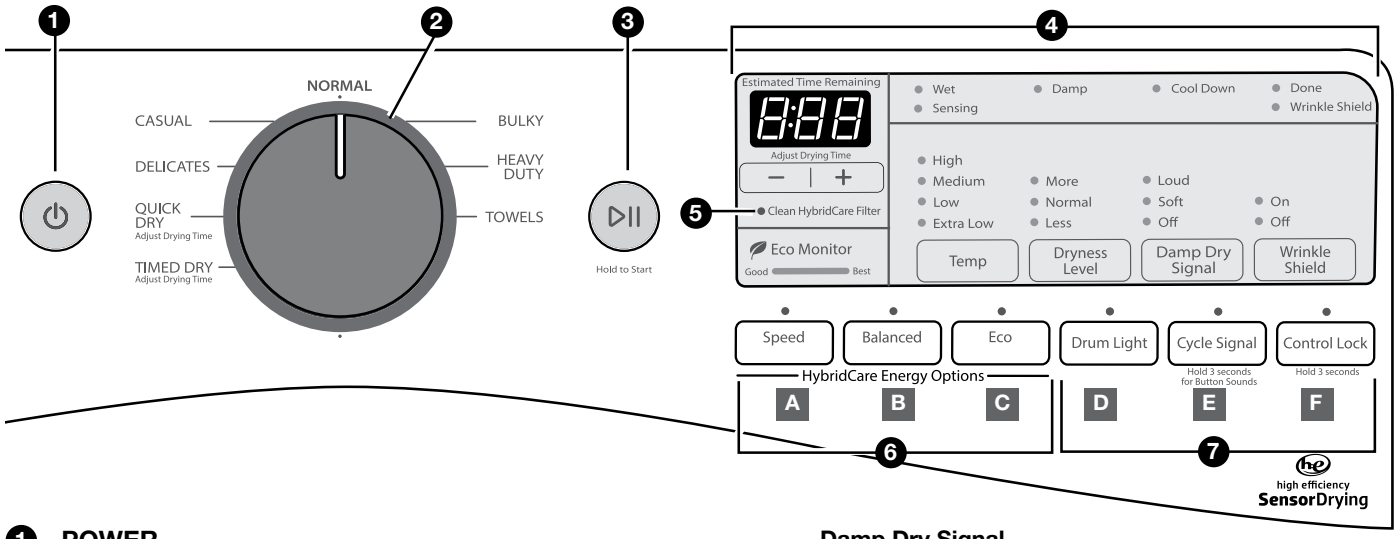

1 POWER
Touch to turn the dryer on and off. Touch to stop/cancel a cycle at any time.

2 CYCLE CONTROL KNOB
Turn the knob to select a cycle for your laundry load. Automatic Cycles are Heavy Duty, Normal, Bulky, Casual, Delicates, and Towels. Manual Cycles are Quick Dry and Timed Dry. See “Cycle Guide” for detailed descriptions of cycles.

3 START/PAUSE
Touch and hold until the LED comes on to start a cycle, or touch once while a cycle is in process to pause it.

4 LED DISPLAY AND SETTINGS
When you select a cycle, its settings will light up and the Estimated Time Remaining (for Automatic Cycles) or actual time remaining (for Manual Cycles) will be displayed. On 2-digit displays, for times longer than 99 minutes, hours will be displayed followed by minutes.

See “Cycle Guide” for available settings on each cycle. Not all settings are available with all cycles.

Cycle Status Lights
The indicators at the top of the display will let you know what stage of the drying cycle is in process. For more information on each stage, see “Cycle Status Indicators.”

–/+ (Adjust Drying Time)
Touch “+” or “–” with Manual Cycles to increase or decrease the length of a Timed Dry or Quick Dry cycle.

Temp
When using Manual Cycles, you may select a dry temperature based on the type of load you are drying. Use the warmest setting safe for the items in the load. Follow garment label instructions.

NOTE: Automatic Cycles use a preset temperature that is not adjustable.

Dryness Level
When using Automatic Cycles, you may select a Dryness Level based on the type of load you are drying.

NOTE: Dryness Level is for use with Automatic Cycles only.

Damp Dry Signal
Touch to select the Damp Dry Signal. When selected, a series of beeps will sound when the load is damp, but not completely dry. This will allow you to take clothes out of the load that do not need to dry completely. This option is available on Heavy Duty, Normal, Bulky, Casual, Delicates, and Towels cycles. The Damp Dry Signal is selected as a default for the Bulky cycle, as a reminder to manually reposition bulky loads midway through the cycle.

Wrinkle Shield™ Option
If you will be unable to remove a load immediately, touch Wrinkle Shield to add up to 150 minutes of periodic tumbling to help reduce wrinkling.

5 Clean HybridCare™ Filter light
Reminds you to clean the HybridCare™ filter after every 5th cycle. Light will reset after filter is cleaned and filter is put back in cabinet.

6 HybridCare™ Energy OPTIONS
Use to select an available mode for your dryer. Your HybridCare™ dryer is more efficient in all modes than your typical dryer.

A Speed
Select this option to save time, but uses more energy.

B Balanced
Use this option to blend between cycle time and energy savings.

C Eco
Eco is the default option for all cycles, which allows you to increase your energy savings by using a lower heat level. This will increase dry times.

NOTE: Energy savings may vary across loads and cycles.

Control Panel and Features (continued)

7 OPTIONS

D Drum Light
Touch to turn the LED drum light on or off. The light will also turn on when the door is open, and turn off automatically after about 5 minutes.

E Cycle Signal
Use this to turn the signal indicating the end of a drying cycle on or off.

NOTE: You may also turn off the tones that sound when a feature, setting, or option is touched. Touch and hold Cycle Signal for about one second to turn sounds on or off.

F Control Lock
Use to lock the controls of the dryer and avoid an accidental change in cycle options or preferences during a drying cycle.

Touch and hold CONTROL LOCK for 3 seconds to lock or unlock the controls of the dryer. During this time, the LED Display will count down 3-2-1. Once the controls are locked, the LED Display will display “Lc” or “Loc.”

NOTE: The Control Lock function may be enabled when recovering from a power failure. To unlock the control, touch and hold CONTROL LOCK for at least 3 seconds.

Cycle Guide - Automatic Cycles

Settings and options shown in **bold** are default settings for that cycle.
If settings are changed, the new settings will be remembered. If there is a power failure, settings will return to the default.
Not all settings and options are available on each cycle.

Use Automatic Cycles for better fabric care and energy savings

The dryer senses moisture in the load or air temperature and shuts off when the load reaches the selected dryness level.
Use the NORMAL dryness level to provide optimal energy savings.

Items to dry:	Cycle:	Temp:	Dryness Level:	Default Time Speed/Eco*:	Energy Options:	Available Options:	Cycle Details:
Work clothes, mixed cottons, corduroys	Normal	**Medium**	More **Normal** Less	**:53/1:23**	Speed Balanced **Eco**	Damp Dry Signal Wrinkle Shield™	Uses Medium heat to dry large loads of mixed fabrics and items.
Jackets, comforters, pillows, sheets	Bulky	**Medium**	More **Normal** Less	**1:05/1:35**	Speed Balanced **Eco**	**Damp Dry Signal** Wrinkle Shield™	Use for drying large, bulky items; do not overfill dryer drum. Partway through the cycle, the signal will sound to indicate when it is time to rearrange items for optimal drying.
Heavyweight items, or heavy work clothes	Heavy Duty	**High**	More **Normal** Less	**1:00/1:30**	Speed Balanced **Eco**	Damp Dry Signal Wrinkle Shield™	Offers stepped drying starting with High heat followed by Medium heat for enhanced fabric care and energy savings.
Large loads of cotton towels	Towels	**High**	**More** Normal Less	**1:07/1:37**	Speed Balanced **Eco**	Damp Dry Signal Wrinkle Shield™	This is a high heat cycle. Use for large loads of heavyweight fabrics such as cotton towels.
Undergarments, blouses, lingerie, performance wear	Delicates	**Extra Low**	More **Normal** Less	**:38/1:08**	Speed Balanced **Eco**	Damp Dry Signal Wrinkle Shield™	Uses Extra Low heat to gently dry delicate items.
Shirts, blouses, casual wear, permanent press, synthetics, lightweight items	Casual	**Low**	More **Normal** Less	**:50/1:20**	Speed Balanced **Eco**	Damp Dry Signal **Wrinkle Shield™**	Uses a stepped drying temperature from Medium to Low for improved moisture removal and enhanced fabric care. Casual is the preferred energy cycle.

* Shows the range of default times based on Speed or Eco HybridCare™ Energy option selected. Times may vary depending on load size, cycle, and options selected.

Cycle Guide - Timed Dry Cycles

Settings and options shown in **bold** are default settings for that cycle. If settings are changed, the new settings will be remembered (except on Quick Dry). If there is a power failure, settings will return to the default. Not all settings and options are available on each cycle.

Adjust drying time on Timed Dry Cycles

When you select a Timed Dry Cycle, the time appears in the display. Use + and – to increase or decrease the time in 1-minute increments. Touch and hold to change the time in 5-minute increments.

Additional time maybe added, but the maximum dry time displayed is 1:40.

Selecting the Temp

A High heat setting may be used for drying heavyweight items such as towels and work clothes.

A Low to Medium heat setting may be used for drying medium-weight items such as sheets, blouses, dresses, underwear, permanent press fabrics, and some knits.

Line dry foam, rubber, plastic, heat-sensitive fabrics, bonded, or laminated fabrics.

NOTE: If you have questions about drying temperatures for various loads, refer to the care label directions.

Items to dry:	Cycle:	Temp:	Default Time:	Available Options:	Cycle Details:
Small loads and sportswear	Quick Dry	**High** Medium Low Extra Low	**:45**	**Speed** Balanced Eco Wrinkle Shield™	For small loads of 3–4 items.
Any load **NOTE:** Line dry foam, rubber, plastic, or heat-sensitive fabrics.	Timed Dry	**High** Medium Low Extra Low	**:60**	**Speed** Balanced Eco Wrinkle Shield™	Use to dry items to a damp level for items that do not require an entire drying cycle. Select a drying temperature based on the type of fabrics in your load. If you are unsure of the temperature to select for a load, select the lower setting rather than the higher setting.

Load Size Recommendations

For best results, follow the wet load size recommendations noted for each cycle.

Small load: Fill the dryer drum with 3–4 items, not more than 1/4 full.

Medium load: Fill the dryer drum up to about 1/2 full.

Large load: Fill the dryer drum up to about 3/4 full. Do not pack tightly. Items need to tumble freely.

Using the Dryer

⚠ WARNING

Explosion Hazard

Keep flammable materials and vapors, such as gasoline, away from dryer.

Do not dry anything that has ever had anything flammable on it (even after washing).

Failure to follow these instructions can result in death, explosion, or fire.

WARNING: To reduce the risk of fire, electric shock, or injury to persons, read the IMPORTANT SAFETY INSTRUCTIONS before operating this appliance.

⚠ WARNING

Fire Hazard

No washer can completely remove oil.

Do not dry anything that has ever had any type of oil on it (including cooking oils).

Do not dry items containing foam, rubber, or plastic in this dryer.

Failure to follow these instructions can result in death or fire.

1. Clean the lint screen

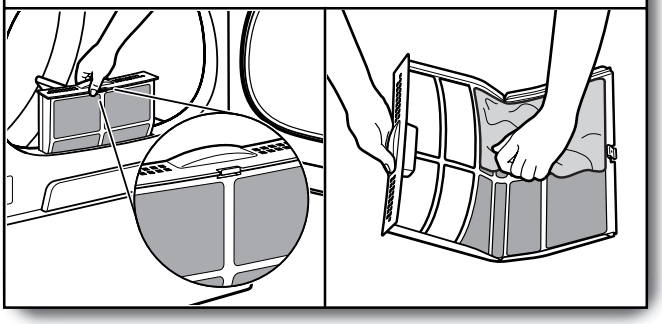

Clean the lint screen before each load. Pull the lint screen straight up and out. Press tab down and open lint screen. Roll lint off the screen with your fingers. Push the lint screen firmly back into place.

IMPORTANT: Clean lint screen before each dryer use as a screen blocked with lint will increase drying time.

2. Clean HybridCare™ Filter

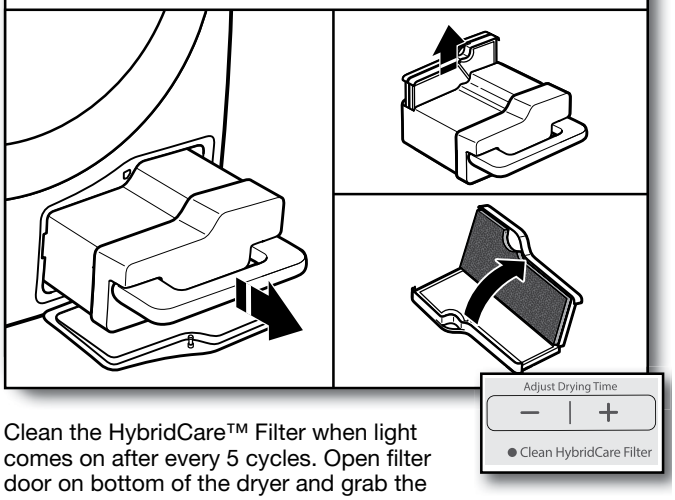

Clean the HybridCare™ Filter when light comes on after every 5 cycles. Open filter door on bottom of the dryer and grab the handle to pull out filter. Set filter on the dryer and pull out lint screen and foam pad on bottom of filter. Roll lint off screen and foam pad with fingers and place back in filter and then filter back in filter housing. (There maybe some water in the filter and this is normal.) For additional cleaning information, see “Dryer Care.”

IMPORTANT: For best drying performance, clean HybridCare™ Filter after every 5th load. Light will reset after filter is cleaned and loaded back into filter housing.

Using the Dryer (continued)

3. Load the dryer

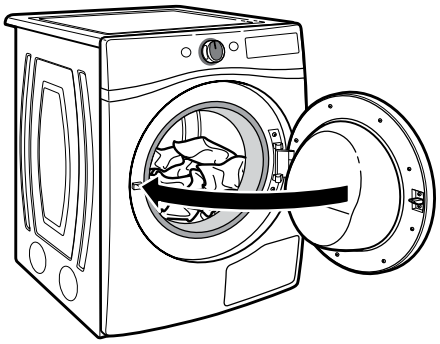

Open the door by pulling on the handle. Place laundry in the dryer. Add a dryer sheet to wet load, if desired. Close the door.

IMPORTANT: Do not tightly pack the dryer. Items need to tumble freely. Tightly packing can lead to poor drying performance and may increase wrinkling and tangling.

4. Touch POWER

Touch POWER to turn on the dryer.

5. Select the desired cycle

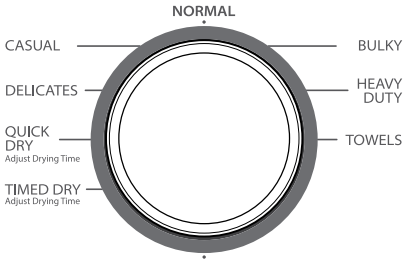

Select the desired cycle for your load. See the “Cycle Guide” for more information about each cycle.

6. Adjust cycle settings, if desired

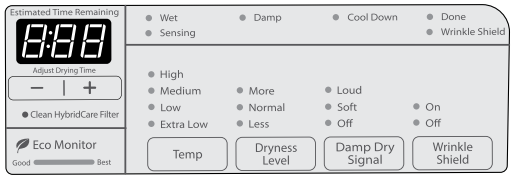

You may adjust different settings, depending on whether you have selected an Automatic Cycle or Timed Dry Cycle. See the “Cycle Guide” for detailed information.

NOTE: Not all options and settings are available with all cycles.

Automatic Cycles:
You can select a different dryness level, depending on your load. Touch DRYNESS LEVEL to scroll to More, Normal, or Less. Selecting More, Normal, or Less automatically adjusts the dryness level at which the dryer will shut off. Once a dryness level is set, it cannot be changed without stopping the cycle.

Automatic Cycles give the best drying in the shortest time. Drying time varies based on fabric type, load size, and dryness setting. Drying time is estimated and may change throughout the cycle. Drying time cannot be changed on Automatic Cycles.

NOTE: Automatic Cycles use a preset temperature that is not adjustable.

Timed Dry Cycles:
When you select a Timed Dry Cycle, the time appears in the display. Touch **+** and **–** to increase or decrease the time in 1 minute increments. Touch and hold to change the time in 5 minute increments.

The temperature may be changed by pressing Temp until the desired dry temperature is lit. Once a cycle has started, the temperature can be changed. Cycle time is estimated and may change throughout the cycle.

7. Select HybridCare™ Energy options

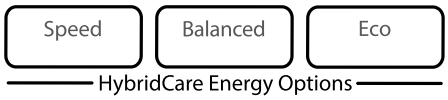

The display will show the HybridCare™ Energy Options for all cycles. To adjust an option, touch its name – Speed, Balanced, or Eco.

Using the Dryer (continued)

8. Touch and hold START/PAUSE to begin cycle

Touch and hold START/PAUSE to begin the cycle.

9. Remove garments promptly after cycle is finished

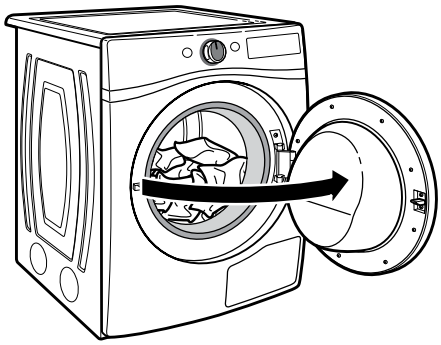

Promptly remove garments after cycle has completed to reduce wrinkling.

Cycle Status Indicators

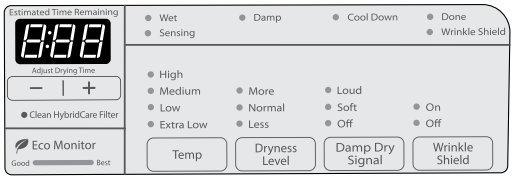

The Cycle Status Indicators show the progress of a cycle.

Clean HybridCare™ Filter

Clean HybridCare™ Filter light comes on after every 5th cycle. Light will reset after filter is cleaned and loaded back into dryer cabinet. For additional cleaning information, see “Dryer Care.”

NOTE: If there are other error issues during a cycle, the Clean HybridCare™ Filter indicator will not light up. See “Troubleshooting” section.

Eco Monitor

The Eco Monitor allows you to see how the settings you select affect your energy usage within the cycle chosen. The Eco Monitor indicator may change, depending on the options and modifiers selected.

Wet

The load is still wet and/or the cycle just started.

Damp

This indicator shows that the load is partially dried and items that you may wish to hang up or iron while still damp may be removed.

Cool Down

The dryer has finished drying with heat, and is now tumbling the load without heat to cool it down and reduce wrinkling.

Done

This will indicate that the selected cycle has ended and the load may be removed from the dryer. If Wrinkle Shield™ option has been selected, the dryer may continue to tumble the load, even if the Done indicator is lit.

Sensing

The Sensing indicator will light during Automatic Cycles to indicate that the moisture sensor on the dryer is operating. This indicator will not light during Manual Cycles or options such as Wrinkle Shield.

Wrinkle Shield™ Option

This indicator will light if the Wrinkle Shield™ option has been selected and is running. The dryer will periodically tumble the load for up to 150 minutes after the cycle has ended.

Additional Features

USING THE DRYING RACK

To purchase a drying rack for your dryer, order by calling **1-877-944-7566**. You will need your model and serial number and the purchase date. Remove and discard any packing material before use.

Use the Drying Rack for items that you do not want to tumble dry, such as sweaters and tennis shoes. When you use the drying rack, the drum continues to turn, but the rack remains stationary.

The drying rack is intended for use with the Manual Dry/ Timed Dry cycles only. The drying rack cannot be used with Automatic cycles.

To use the drying rack:

IMPORTANT: Do not remove the lint screen.

1. Open dryer door.

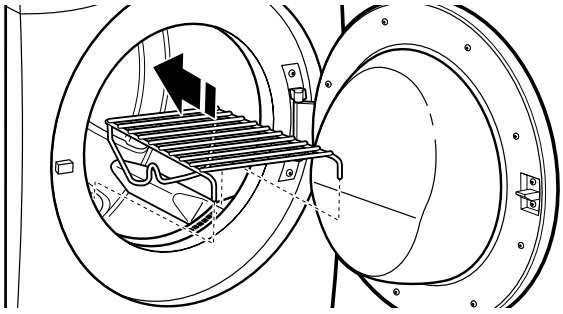

2. Align the two hooks on the front of the drying rack with the holes in the dryer door opening and press down fully into holes. Rest the rear support on the dryer back ledge.

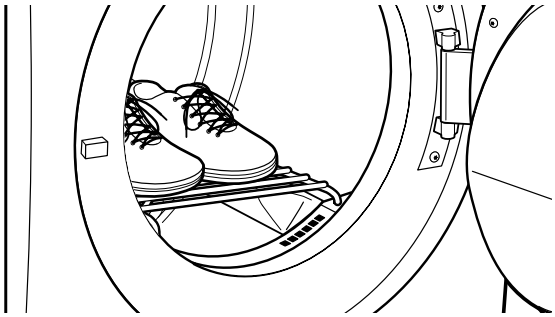

3. Place wet items on top of the drying rack. Allow space around items for air to circulate. The drying rack does not move, but the drum will rotate; be sure to leave adequate clearance between items and the inside of the dryer drum. Make sure items do not hang over the edges or between drying rack grille.
4. Close the door.
5. Select a Timed Dry, or Low Temperature cycle. Items containing foam, rubber, or plastic must be dried on a clothesline.
6. When the cycle is selected, the Estimated Time Remaining display shows the default time. You can change the actual time in the cycle by increasing or decreasing the cycle time.
7. Start the dryer.

NOTE: Check the lint screen and remove any lint accumulated from items dried on the drying rack after the cycle is finished.

Dryer Care

CLEANING THE DRYER LOCATION

Keep dryer area clear and free from items that would block the airflow for proper dryer operation. This includes clearing piles of laundry in front of the dryer.

⚠ WARNING

Explosion Hazard

Keep flammable materials and vapors, such as gasoline, away from dryer.

Place dryer at least 18 inches (460 mm) above the floor for a garage installation.

Failure to do so can result in death, explosion, or fire.

CLEANING THE DRYER INTERIOR

To clean dryer drum

1. Use a mild hand dish detergent mixed at a low concentration with very warm water, and rub with a soft cloth.
2. Rinse well with a wet sponge or towel.
3. Tumble a load of clean clothes or towels to dry drum

   OR

   Use a microfiber cloth and hot water in a spray bottle to clean the drum and a second microfiber towel to dry.

NOTE: Garments that contain unstable dyes, such as denim blue jeans or brightly colored cotton items, may discolor the rear of the dryer interior. These stains are not harmful to your dryer and will not stain future loads of clothes. Dry unstable dye items inside out to avoid transfer of dye.

REMOVING ACCUMULATED LINT

From Inside the Dryer Cabinet

Lint should be removed every 2 years, or more often, depending on dryer usage. Cleaning should be done by a qualified appliance servicer.

Dryer Care (continued)

CLEANING THE LINT SCREEN

Clean lint screen after every load

The lint screen is located in the door opening of the dryer. A screen blocked by lint can increase drying time.

To clean:

1. Pull the lint screen straight up and out. Press tab down and open lint screen. Roll lint off the screen with your fingers.

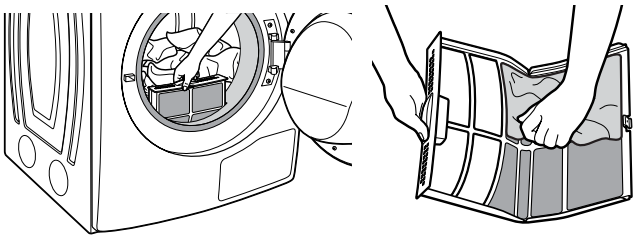

2. Push the lint screen firmly back into place.

IMPORTANT:

- Do not run the dryer with the lint screen loose, damaged, blocked, or missing. Doing so can cause overheating and damage to both the dryer and fabrics.

As needed cleaning

Laundry detergent and fabric softener residue can build up on the lint screen. This buildup can cause longer drying times for your clothes, or cause the dryer to stop before your load is completely dry. The screen is probably clogged if lint falls off while the screen is in the dryer.

Clean the lint screen with a nylon brush every 6 months, or more frequently, if it becomes clogged due to a residue buildup.

To wash lint screen

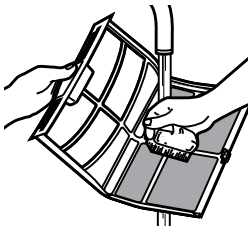

1. Roll lint off the screen with your fingers.
2. Wet both sides of lint screen with hot water.
3. Wet a nylon brush with hot water and liquid detergent. Scrub lint screen with the brush to remove residue buildup.
4. Rinse screen with hot water.
5. Thoroughly dry lint screen with a clean towel. Reinstall screen in dryer or lint filter.

CLEANING THE HybridCare™ FILTER AND FILTER LINT SCREEN

Clean HybridCare™ filter after every 5 loads

The filter is located in bottom corner of dryer. The control panel has an indicator light to remind you to clean the HybridCare™ filter.

1. Open the bottom filter door. Lift handle up and pull out filter. Set filter on the dryer and pull out lint screen and foam pad located at the back of the filter. Remove lint off the screen and foam pad with your fingers.

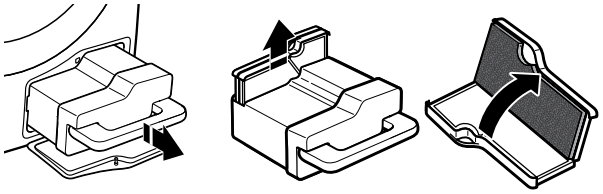

NOTE: If lint still remains on screen and foam pad then wet both sides with hot water. If necessary, wet a nylon brush with hot water and liquid detergent. Scrub lint screen with the brush to remove residue buildup. Rinse screen and foam pad with hot water.

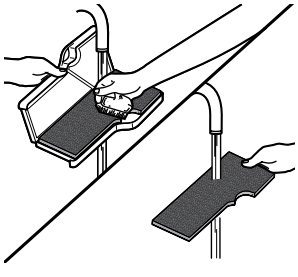

2. Clean the filter housing and mesh inside with a damp cloth, household vacuum cleaner, or soft brush. Clean the screen at the back of the filter cabinet once a month.

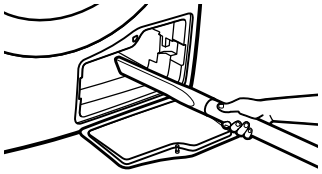

3. Put lint screen and foam pad back into filter and put filter back in dryer cabinet. Dryer will not operate without filter and make sure the handle is downward to lock in place. LF will display if not properly seated.

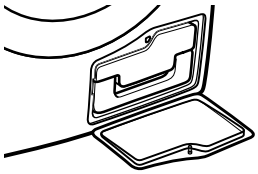

IMPORTANT:

- Do not run the dryer with the filter loose, damaged, blocked, or missing. Doing so can cause overheating and damage to both the dryer and fabrics.

Dryer Care (continued)

CLEANING THE COOLING FAN SCREEN

The cooling fan screen is located on the back lower right of the dryer. Pull dryer away from wall and vacuum cooling fan screen with brush attachment.

IMPORTANT: Clean cooling fan screen monthly, or as needed. A blocked screen will increase drying time.

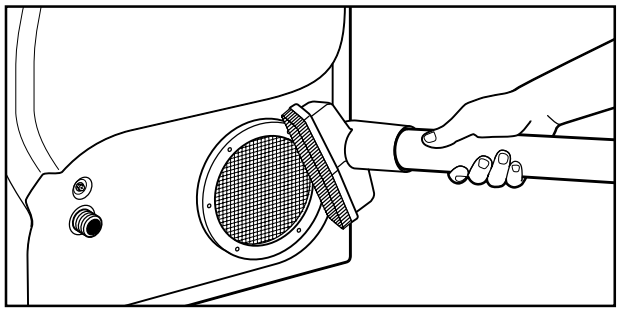

NON-USE, STORAGE, AND MOVING CARE

Install and store your dryer where it will not freeze. Because some water may stay in the hose, freezing can damage your dryer. If storing or moving your dryer during freezing weather, winterize it.

Non-Use or Storage Care

Operate your dryer only when you are at home. If you will be on vacation or not using your dryer for an extended period of time, you should:

1. Unplug dryer or disconnect power.
2. Clean lint screen. See “Cleaning the Lint Screen.”

Moving Care

For power supply cord-connected dryers:

1. Unplug the power supply cord.
2. Make sure leveling legs are secure in dryer base.
3. Use tape to secure dryer door.

⚠ WARNING

Electrical Shock Hazard

Disconnect power before servicing.

Replace all parts and panels before operating.

Failure to do so can result in death or electrical shock.

For direct-wired dryers:

1. Disconnect power.
2. Disconnect wiring.
3. Make sure leveling legs are secure in dryer base.
4. Use tape to secure dryer door.

Reinstalling the Dryer

Follow the Installation Instructions to locate, level, and connect the dryer.

Troubleshooting

First try the solutions suggested here or visit our website at www.whirlpool.com/product_help – In Canada www.whirlpool.ca for assistance and to possibly avoid a service call.

If you experience	Possible Causes	Solution
Dryer Operation		
Dryer will not run	Door not closed completely.	Make sure the dryer door is closed completely.
	START/PAUSE not touched firmly or held long enough.	Touch and hold START/PAUSE 2–5 seconds.
	Lint filter and/or HybridCare™ filter not in place.	Place filter back in dryer and make sure the handle is properly seated. LF will display if not properly seated.
	Household fuse is blown or circuit breaker has tripped.	There may be 2 household fuses or circuit breakers for the dryer. Check that both fuses are intact and tight, or that both circuit breakers have not tripped. Replace the fuses or reset the circuit breaker. If the problem continues, call an electrician.
	Incorrect power supply.	Electric dryers require 240-volt power supply. Check with a qualified electrician.
	Wrong type of fuse.	Use a time-delay fuse.
Dryer will not heat	Household fuse is blown or circuit breaker has tripped.	The drum may be turning, but you may not have heat. Electric dryers use 2 household fuses or circuit breakers. Replace the fuses or reset the circuit breaker. If the problem continues, call an electrician.
	Incorrect power supply.	Electric dryers require 240-volt power supply. Check with a qualified electrician.
Unusual Noise		
Thumping noise	Dryer hasn't been used in a while.	This is due to temporary flat spots on the drum rollers. The thumping sound will diminish after a few minutes.
Rattling or vibrating noise	A small object caught between the edges of dryer drum.	Check the front and rear edges of the drum for small objects. Clean out pockets before laundering.
	Dryer isn't properly leveled.	The dryer may vibrate if not properly installed. See the Installation Instructions. All four dryer feet should be in firm contact with the floor.
	Clothing is balled up in dryer.	When balled up, the load will bounce, causing the dryer to vibrate. Separate the load items and restart the dryer.
Loud humming or increased noise during cycle	Load is packed tightly.	Reduce load size to recommended load size in "Cycle Guide." Run the dryer for 5–10 minutes.
Dryer Results		
Clothes are not drying satisfactorily or drying times are too long	Lint screen is clogged with lint.	Clean lint screen before each load.
	HybridCare™ filter and screen is clogged with lint.	Clean HybridCare filter after every 5th cycle. Clean screen behind filter once a month.
	Cooling fan screen is blocked with lint.	Pull dryer out and make sure cooling fan has proper ventilation. Clean cooling fan screen on back of dryer monthly, or as needed.
	The dryer is not level.	Clothes not contacting the moisture sensors during Automatic cycles. See "Level Dryer" in the Installation Instructions.
	The load is too large and heavy to dry quickly.	Separate the load to tumble freely.
	Fabric softener sheets are blocking the grille.	The air outlet grille is just inside the door, behind the lint screen. Check that it is not blocked by a fabric softener sheet. Use only one fabric softener sheet, and use it only once.
	The dryer is located in a room with temperature below 45°F (7°C).	Proper operation of dryer cycles requires temperatures above 45°F (7°C).
	The dryer is located in a closet.	Closet doors must have ventilation openings at the top and bottom of the door. The front of the dryer requires a minimum of 1" (25 mm) of airspace, and, for most installations, the rear of the dryer requires 5" (127 mm). See the Installation Instructions.

Troubleshooting (continued)

First try the solutions suggested here or visit our website at www.whirlpool.com/product_help - In Canada www.whirlpool.ca for assistance and to possibly avoid a service call.

If you experience	Possible Causes	Solution
Dryer Results (cont.)		
There may be some water in the HybridCare™ filter or on floor	The dryer is not level.	Dryer needs to have a slope less than 1" (25 mm). See “Level Dryer” in the Installation Instructions.
	HybridCare™ filter is not properly seated.	Make sure filter is placed in the housing cabinet correctly. See “Cleaning the HybridCare™ Filter and Lint Screen.”
	Drain hose is longer than what was provided.	Drain hose can be installed no higher than 72" (1.8 m) from bottom of the dryer. See “Drain System” in the Installation Instructions.
Cycle time is too short	The load may not be contacting the sensor strips on Automatic Cycles.	Level the dryer. See the Installation Instructions. All four dryer feet should be in firm contact with the floor.
	The automatic cycle is ending early.	Change the dryness level setting on Automatic Cycles. Increasing or decreasing the dryness level will change the amount of drying time in a cycle. If loads are consistently ending too early, see also “Changing the Automatic Cycle settings to increase or decrease drying time.”
Lint on load	Lint screen is clogged with lint.	Clean lint screen before each load.
Stains on load	Improper use of fabric softener.	Add dryer fabric softener sheets at the beginning of the cycle. Fabric softener sheets added to a partially dried load can stain your garments. Do not use fabric softener sheets with steam cycles.
Stains on drum	Loose dyes in clothes.	Drum stains are caused by dyes in clothing (usually blue jeans). These will not transfer to other clothing.
Loads are wrinkled	The load was not removed from dryer at the end of the cycle.	Refer to garment care label instructions. Dry-clean-only garments are not recommended.
	The dryer was tightly packed.	Dry smaller loads that can tumble freely. Results may also vary depending on fabric type.
Odors	Recent painting, staining, or varnishing in the area where your dryer is located.	Ventilate the area. When the odors or fumes are gone from the area, rewash and dry the clothing.
	Odors are left in garments after wearing.	Rewash and dry the clothing.
Load too hot	Load removed before cool down portion of cycle complete.	Allow the dryer to complete the cool down portion of the cycle before removing the load.
	Using Timed Dry cycle with a high temperature setting.	Select an Automatic Cycle with a lower heat setting to avoid overdrying the load.
Stains or lint build-up on wall behind dryer	Dryer to close to wall.	Move dryer away from wall and make sure you have proper ventilation.
Clean HybridCare™ Filter indicator is lit	The HybridCare™ Filter and/or lint screen is clogged.	The dryer will continue to run when this indicator is lit. Try the following: • Clean lint screen. • Clean the HybridCare™ Filter and screen in back of filter cabinet. Must be cleaned every 5 cycles for best performance.

Troubleshooting (continued)

First try the solutions suggested here or visit our website at www.whirlpool.com/product_help - In Canada www.whirlpool.ca for assistance and to possibly avoid a service call.

If you experience	Possible Causes	Solution
Dryer Displaying Code Message or Cycle Status Indicator Lights Up		
"LF"	Lint filter removed.	Indicates that the HybridCare™ filter has been removed. Place filter into dryer and make sure the handle is properly seated.
"PF" (power failure)	The drying cycle has been interrupted by a power failure.	Touch and hold START to restart the dryer. **NOTE:** The Control Lock function may be enabled when recovering from a power failure. To unlock the control, touch and hold CONTROL LOCK for at least 3 seconds.
"L2" Diagnostic Code (low or no line voltage condition)	There may be a problem with your home power supply, keeping the dryer's heater from turning on.	The dryer will continue to run when this diagnostic code is present. Touch any pad to clear the code from the display and return to the estimated time remaining. **NOTE:** This error will only show during the initial installation. Try the following: Check to see if a household fuse has blown or circuit breaker has tripped. Electric dryers use two household fuses or breakers. Replace the fuse or reset the circuit breaker. Confirm that the power cord is properly installed. Refer to the Installation Instructions for details. Select a Timed Dry heated cycle, and restart the dryer. If the message persists, consult a qualified electrician.
"F# E#" (F1 E1, F3 E1, etc.) variable service codes	The dryer is in need of service.	If a code beginning with an "F" appears in the display, alternating between F# and E#, the dryer control has detected a problem that requires service. Call for service.
"Loc" or "Lc"	The Control Lock is enabled.	Touch and hold CONTROL LOCK for 3 seconds to unlock the controls of the dryer. During this time the LED Display will count down 3-2-1. When the Control Lock is disabled, the LED Display will clear.

Notes

Section 3: Installation

This section provides installation requirements and procedures for the “HybridCare™ Dryer with Heat Pump Technology.”

- Installation Requirements
- Location Requirements
- Drain System
- Electrical Requirements - U.S.A. Only
- Electrical Dryer Power Hookup - Canada Only
- Install Leveling Legs
- Electrical Installation - U.S.A. Only
- Connect Outlet Hose
- Level Dryer
- Complete Installation Checklist
- Door Reversal (optional)
- Notes

Installation Requirements

TOOLS AND PARTS

Gather the required tools and parts before starting installation.

Tools needed:

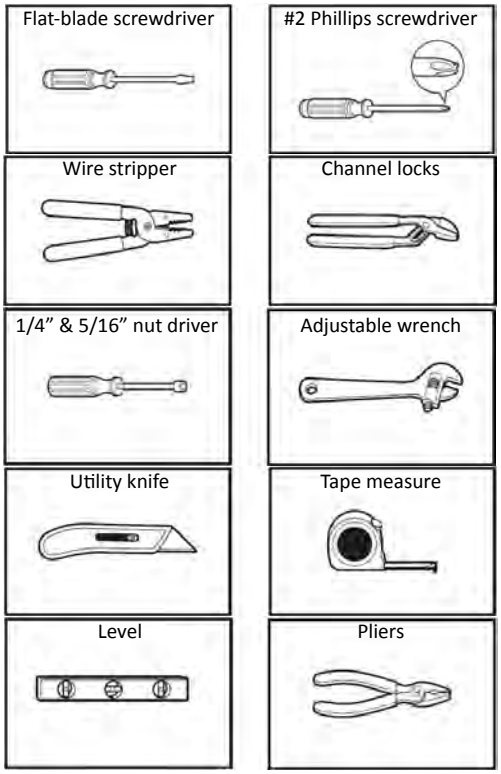

Tools needed:

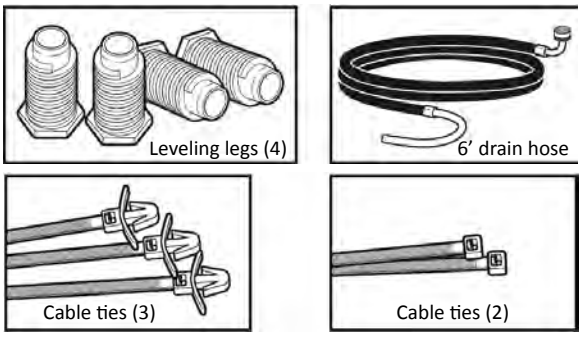

Parts package is located in dryer drum. Check that all parts are included.

NOTE: Do not use leveling legs supplied with dryer if installing with a pedestal or a stack kit.

If using a power supply cord:

Use a UL listed power supply cord kit marked for use with clothes dryers. The kit should contain:

- A UL listed 30-amp power supply cord, rated 120/240 volt minimum. The cord should be type SRD or SRDT and be at least 4 ft. (1.22 m) long. The wires that connect to the dryer must end in ring terminals or spade terminals with upturned ends.
- A UL listed strain relief.

Additional Accessories: (Not supplied with dryer)

Refer to your Use and Care Guide for information about accessories available for your dryer.

Location Requirements

Check code requirements. Some codes limit, or do not permit, installing dryer in garages, closets, mobile homes, or sleeping quarters. Contact your local building inspector.

⚠ WARNING

Explosion Hazard

Keep flammable materials and vapors, such as gasoline, away from dryer.

Place dryer at least 18 inches (460 mm) above the floor for a garage installation.

Failure to do so can result in death, explosion, or fire.

You will need:

- A separate 30 amp circuit.
- If using power supply cord, a grounded electrical outlet located within 2 ft. (610 mm) of either side of dryer. See “Electrical Requirements.”
- Floor must support dryer weight of 200 lbs. (90.7 kg). Also consider weight of companion appliance.
- Level floor with maximum slope of 1" (25 mm) under entire dryer. If forward slope is greater than 1" (25 mm), water could run out from front of filter. Install Extended Dryer Feet Kit, Part Number 279810. If not level, clothes may not tumble properly and automatic sensor cycles may not operate correctly.
- For garage installation, place dryer at least 18" (460 mm) above floor. If using a pedestal, you will need 18" (460 mm) to bottom of dryer.
- The dryer must not be installed or stored in an area where it will be exposed to water and/or weather.

IMPORTANT: Do not operate, install, or store dryer where it will be exposed to water, weather, or at temperatures below 40° F (4° C). Lower temperatures may cause dryer not to shut off at end of automatic sensor cycles, resulting in longer drying times.

DRYER DIMENSIONS

Front view:

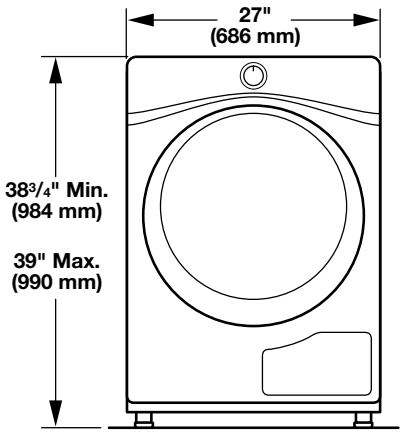

Location Requirements (continued)

Side view:

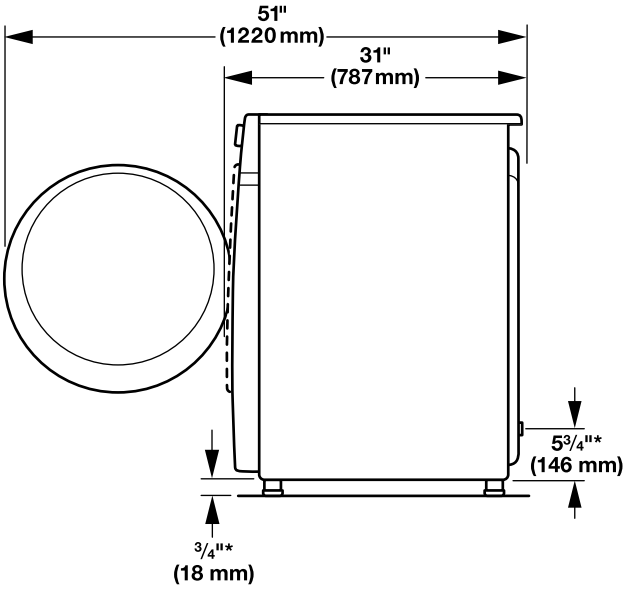

Back view:

NOTE: Allow clearance behind dryer for proper drain hose routing and cooling fan ventilation. Push dryer back as far as possible and make sure drain hose is not crushed or kinked.

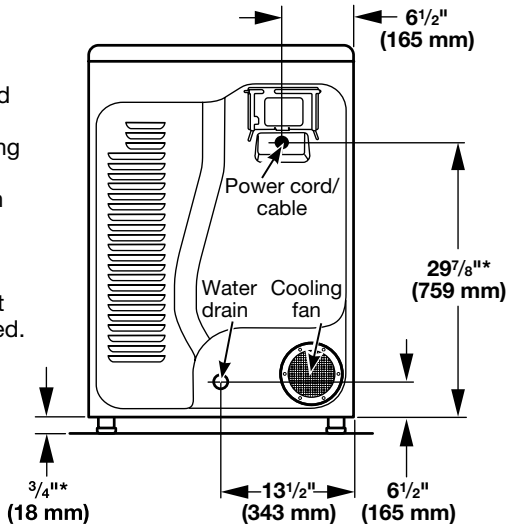

* Approx. measurement.

IMPORTANT: Do not block cooling fan as your dryer may not operate properly.

Installation spacing for recessed area or closet installation

All dimensions show recommended and minimum spacing allowed.

- Additional spacing should be considered for ease of installation and servicing.
- Additional clearances might be required for wall, door, floor, moldings, and drain system.
- Additional spacing should be considered on all sides of the dryer to reduce noise transfer.
- For closet installation, with a door, minimum ventilation openings in the top and bottom of the door are required. Louvered doors with equivalent ventilation openings are acceptable.
- Companion appliance spacing should also be considered.

Recommended installation clearances (dryer only):

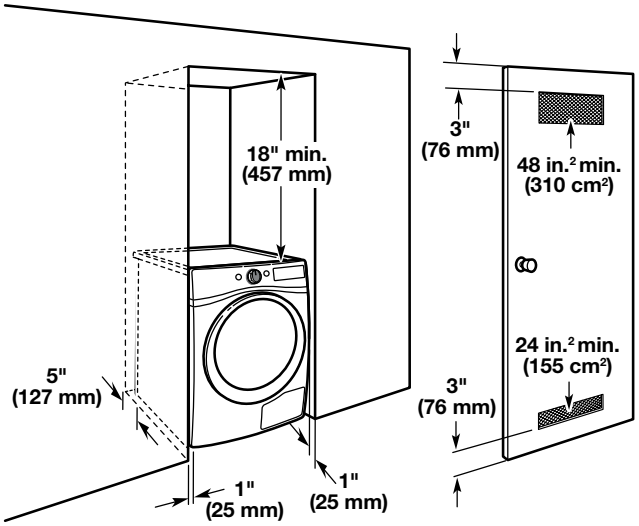

Mobile home – Additional installation requirements:

This dryer is suitable for mobile home installations. The installation must conform to the Manufactured Home Construction and Safety Standard, Title 24 CFR, Part 3280 (formerly the Federal Standard for Mobile home construction and Safety, Title 24, HUD Part 280) or Standard CAN/CSA-Z240 MH.

Drain System

Drain system can be installed using a floor drain, wall standpipe, floor standpipe, or laundry tub. Select method you need.

IMPORTANT: To avoid siphoning, only 4.5" (114 mm) of drain hose should be inside standpipe. Always secure drain hose with cable tie.

Floor standpipe drain system

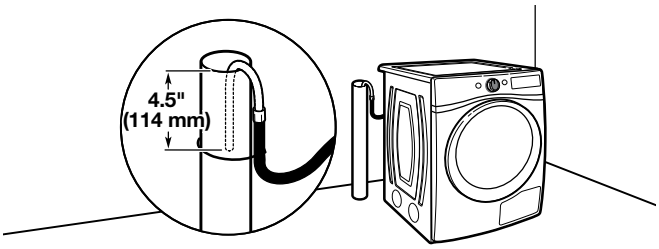

Minimum diameter for a standpipe drain: 2" (51 mm). Minimum carry-away capacity: 17 gal. (64 L) per minute. A 1/4" (6 mm) diameter to 1" (25 mm) diameter Standpipe Adapter Kit is available. Top of standpipe must be at least 30" (762 mm) high; install no higher than 72" (1.8 m) from bottom of dryer.

IMPORTANT: Only 4.5" (114 mm) of drain hose should be inside standpipe; do not force excess hose into standpipe.

Wall standpipe drain system

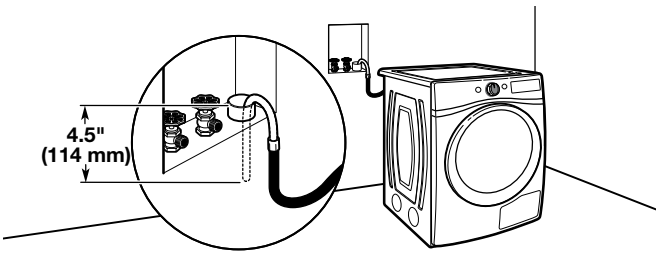

See requirements for floor standpipe drain system.

Laundry tub drain system

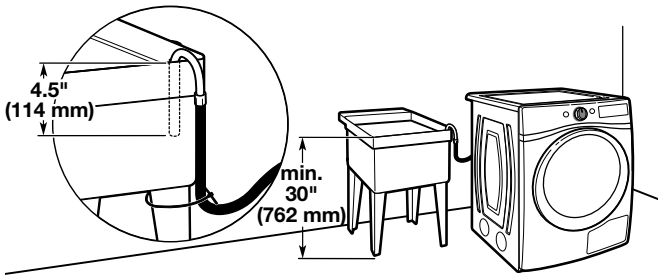

Minimum capacity: 20 gal. (76 L). Top of laundry tub must be at least 30" (762 mm) above floor; install no higher than 72" (1.8 m) from bottom of dryer.

IMPORTANT: Only 4.5" (114 mm) of drain hose should lay on side of laundry tub. Do not lay the hose at the bottom of tub.

Floor drain system

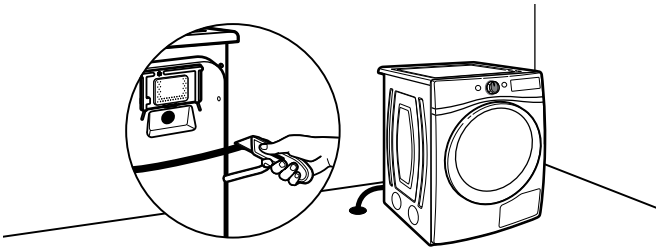

Remove the U-bend at the end of the drain hose by cutting the hose at the end of the U-bend for the floor drain system as shown in the picture above.

NOTE: Cut hose so that no more than 4.5" (114 mm) of the hose is in the floor drain to avoid siphoning.

Electrical Requirements - U.S.A. Only

It is your responsibility:

- To contact a qualified electrical installer.
- To be sure that the electrical connection is adequate and in conformance with the National Electrical Code, ANSI/ NFPA 70 – latest edition and all local codes and ordinances.

  The National Electrical Code requires a 4-wire power supply connection for homes built after 1996, dryer circuits involved in remodeling after 1996, and all mobile home installations.

  A copy of the above code standards can be obtained from: National Fire Protection Association, One Batterymarch Park, Quincy, MA 02269.
- To supply the required 3 or 4 wire, single phase, 120/240 volt, 60 Hz, AC only electrical supply (or 3 or 4 wire, 120/208 volt electrical supply, if specified on the serial/rating plate) on a separate 30-amp circuit, fused on both sides of the line. Connect to an individual branch circuit. Do not have a fuse in the neutral or grounding circuit.
- Do not use an extension cord.
- If codes permit and a separate ground wire is used, it is recommended that a qualified electrician determine that the ground path is adequate.

Electrical Connection

To properly install your dryer, you must determine the type of electrical connection you will be using and follow the instructions provided for it here.

- This dryer is manufactured ready to install with a 3-wire electrical supply connection. The neutral ground conductor is permanently connected to the neutral conductor (white wire) within the dryer. If the dryer is installed with a 4-wire electrical supply connection, the neutral ground conductor must be removed from the external ground connector (green screw), and secured under the neutral terminal (center or white wire) of the terminal block. When the neutral ground conductor is secured under the neutral terminal (center or white wire) of the terminal block, the dryer cabinet is isolated from the neutral conductor. The green ground wire of the 4-wire power cord must be secured to the dryer cabinet with the green ground screw.
- If local codes do not permit the connection of a neutral ground wire to the neutral wire, see “Optional 3-wire connection” section.

- A 4-wire power supply connection must be used when the appliance is installed in a location where grounding through the neutral conductor is prohibited. Grounding through the neutral is prohibited for (1) new branch-circuit installations after 1996, (2) mobile homes, (3) recreational vehicles, and (4) areas where local codes prohibit grounding through the neutral conductors.

If using a power supply cord:

Use a UL listed power supply cord kit marked for use with clothes dryers. The kit should contain:

- A UL listed 30-amp power supply cord, rated 120/240 volt minimum. The cord should be type SRD or SRDT and be at least 4 ft. (1.22 m) long. The wires that connect to the dryer must end in ring terminals or spade terminals with upturned ends.
- A UL listed strain relief.

If your outlet looks like this:

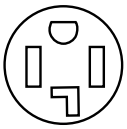

4-wire receptacle (14-30R)

Then choose a 4-wire power supply cord with ring or spade terminals and UL listed strain relief. The 4-wire power supply cord, at least 4 ft. (1.22 m) long, must have four 10-gauge copper wires and match a 4-wire receptacle of NEMA Type 14-30R. The ground wire (ground conductor) may be either green or bare. The neutral conductor must be identified by a white cover.

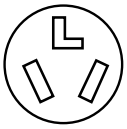

3-wire receptacle (10-30R)

Then choose a 3-wire power supply cord with ring or spade terminals and UL listed strain relief. The 3-wire power supply cord, at least 4 ft. (1.22 m) long, must have three 10-gauge copper wires and match a 3-wire receptacle of NEMA Type 10-30R.

If connecting by direct wire:

Power supply cable must match power supply (4-wire or 3-wire) and be:

- Flexible armored cable or nonmetallic sheathed copper cable (with ground wire), covered with flexible metallic conduit. All current-carrying wires must be insulated.
- 10-gauge solid copper wire (do not use aluminum) at least 5 ft. (1.52 m) long.

GROUNDING INSTRUCTIONS

- For a grounded, cord-connected dryer:
This dryer must be grounded. In the event of malfunction or breakdown, grounding will reduce the risk of electric shock by providing a path of least resistance for electric current. This dryer uses a cord having an equipment-grounding conductor and a grounding plug. The plug must be plugged into an appropriate outlet that is properly installed and grounded in accordance with all local codes and ordinances.

- For a permanently connected dryer:
This dryer must be connected to a grounded metal, permanent wiring system, or an equipment-grounding conductor must be run with the circuit conductors and connected to the equipment-grounding terminal or lead on the dryer.

WARNING: Improper connection of the equipment-grounding conductor can result in a risk of electric shock. Check with a qualified electrician or service representative or personnel if you are in doubt as to whether the dryer is properly grounded. Do not modify the plug on the power supply cord: if it will not fit the outlet, have a proper outlet installed by a qualified electrician.

SAVE THESE INSTRUCTIONS

Electrical Dryer Power Hookup - Canada Only

Electrical Requirements

⚠ WARNING

Electrical Shock Hazard

Plug into a grounded 4 prong outlet.

Failure to do so can result in death or electrical shock.

It is your responsibility:

- To contact a qualified electrical installer.
- To be sure that the electrical connection is adequate and in conformance with the Canadian Electrical Code, C22.1-latest edition and all local codes. A copy of the above codes standard may be obtained from: Canadian Standards Association, 178 Rexdale Blvd., Toronto, ON M9W 1R3 CANADA.

- To supply the required 4 wire, single phase, 120/240 volt, 60 Hz., AC only electrical supply on a separate 30-amp circuit, fused on both sides of the line. A time-delay fuse or circuit breaker is recommended. Connect to an individual branch circuit.
- This dryer is equipped with a CSA International Certified Power Cord intended to be plugged into a standard 14-30R wall receptacle. The cord is 5 ft. (1.52 m) in length. Be sure wall receptacle is within reach of dryer's final location.

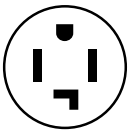

4-wire receptacle (14-30R)

- Do not use an extension cord.

If using a replacement power supply cord, it is recommended that you use Power Supply Cord Replacement Part Number 8579325. For further information, please reference the "Assistance or Service" section of the "Use and Care Guide."

GROUNDING INSTRUCTIONS

- For a grounded, cord-connected dryer:

This dryer must be grounded. In the event of malfunction or breakdown, grounding will reduce the risk of electric shock by providing a path of least resistance for electric current. This dryer is equipped with a cord having an equipment-grounding conductor and a grounding plug. The plug must be plugged into an appropriate outlet that is properly installed and grounded in accordance with all local codes and ordinances.

WARNING: Improper connection of the equipment-grounding conductor can result in a risk of electric shock. Check with a qualified electrician or service representative or personnel if you are in doubt as to whether the dryer is properly grounded. Do not modify the plug provided with the dryer: if it will not fit the outlet, have a proper outlet installed by a qualified electrician.

SAVE THESE INSTRUCTIONS

Install Leveling Legs

⚠ WARNING

Excessive Weight Hazard

Use two or more people to move and install dryer.

Failure to do so can result in back or other injury.

1. Prepare dryer for leveling legs

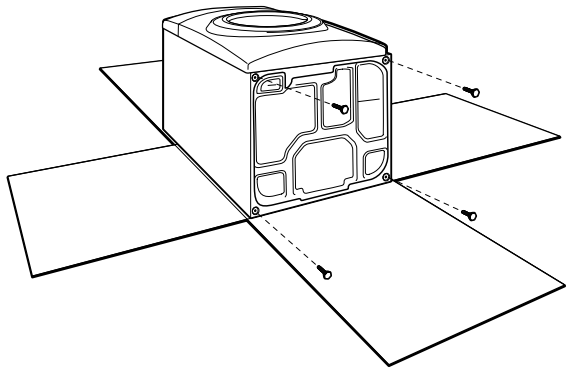

To avoid damaging floor, use a large flat piece of cardboard from dryer carton; place under entire back edge of dryer. Firmly grasp dryer body (not console panel) and gently lay dryer down on cardboard.

2. Screw in leveling legs

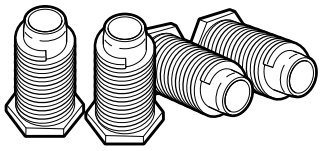

Using a wrench and tape measure, screw leveling legs into leg holes until bottom of foot is approximately 1/2" (13 mm) from bottom of dryer.

Now stand the dryer on its feet. Slide the dryer until it is close to its final location.

Electrical Installation - U.S.A. Only

Before you start: disconnect power.

1. Choose electrical connection type

Power supply cord 4-wire receptacle (NEMA Type 14-30R).
Go to “Power Supply Cord Connection.”

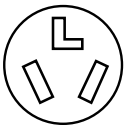

Power supply cord 3-wire receptacle (NEMA Type 10-30R).
Go to “Power Supply Cord Connection.”

4-wire direct connection:
Go to “Direct Wire Connection.”

3-wire direct connection:
Go to “Direct Wire Connection.”

NOTE: If local codes do not permit connection of a cabinet-ground conductor to neutral wire, go to “Optional 3-wire connection.” This connection may be used with either a power supply cord or a direct wire connection.

2. Remove terminal block cover

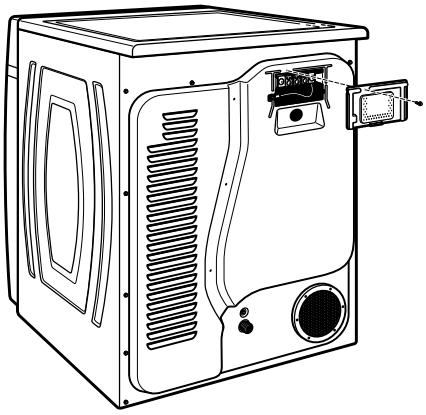

Remove hold-down screw and terminal block cover.

Power Supply Cord Connection

⚠ WARNING

Fire Hazard

Use a new UL listed 30 amp power supply cord.

Use a UL listed strain relief.

Disconnect power before making electrical connections.

Connect neutral wire (white or center wire) to center terminal.

Ground wire (green or bare wire) must be connected to green ground connector.

Connect remaining 2 supply wires to remaining 2 terminals (gold).

Securely tighten all electrical connections.

Failure to do so can result in death, fire, or electrical shock.

Power supply cord strain relief:

1. Attach power supply cord strain relief

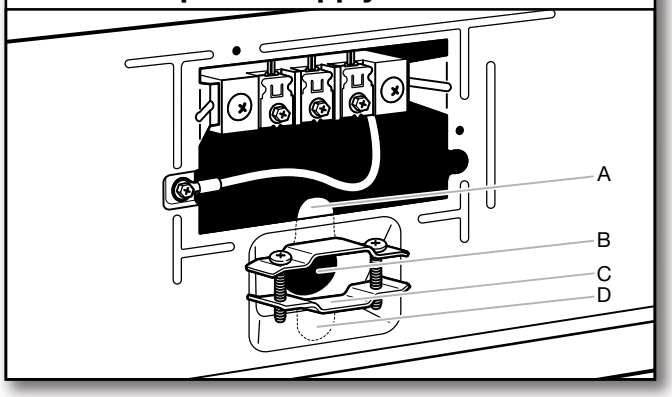

Remove the screws from a 3/4" (19 mm) UL listed strain relief (UL marking on strain relief). Put the tabs of the two clamp sections (C) into the hole below the terminal block opening (B) so that one tab is pointing up (A) and the other is pointing down (D), and hold in place. Tighten strain relief screws just enough to hold the two clamp sections (C) together.

2. Attach power supply cord to strain relief

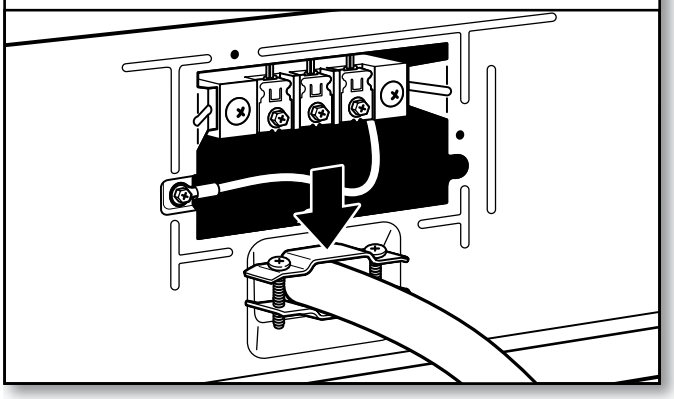

Put power supply cord through the strain relief. Be sure that the wire insulation on the power supply cord is inside the strain relief. The strain relief should have a tight fit with the dryer cabinet and be in a horizontal position. Do not further tighten strain relief screws at this point.

If your outlet looks like this:

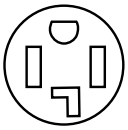

Power supply cord 4-wire receptacle (NEMA Type 14-30R):
Go to “4-Wire Power Supply Cord Connection”.

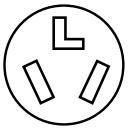

Power supply cord 3-wire receptacle (NEMA Type 10-30R):
Go to “3-Wire Power Supply Cord Connection”.

4-Wire Power Supply Cord Connection

IMPORTANT: A 4-wire connection is required for mobile homes and where local codes do not permit the use of 3-wire connections.

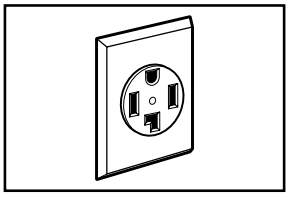

4-wire receptacle (NEMA type 14-30R)

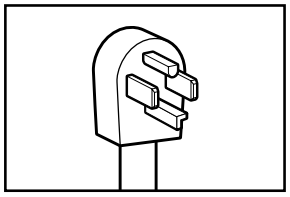

4-prong plug

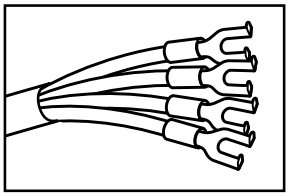

Spade terminals with upturned ends

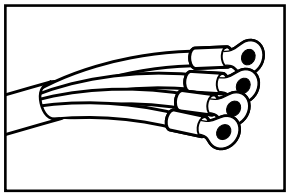

Ring terminals

1. Prepare to connect neutral ground wire and neutral wire

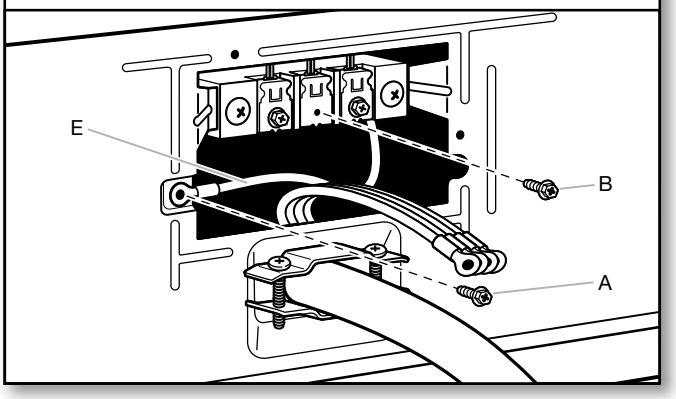

Remove center terminal block screw (B). Remove neutral ground wire (E) from green external ground conductor screw (A).

2. Connect neutral ground wire and neutral wire

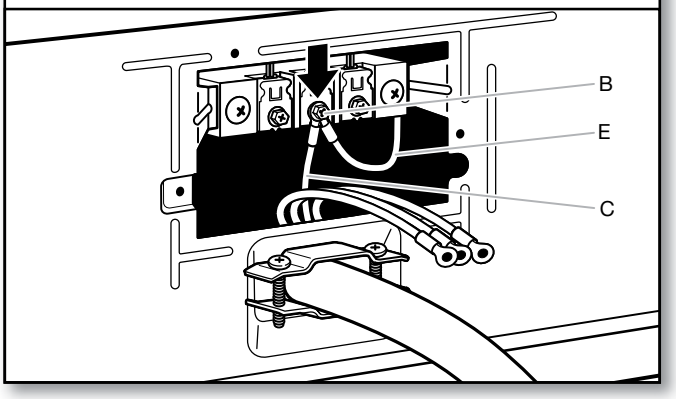

Connect neutral ground wire (E) and neutral wire (white or center) (C) of power supply cord under center terminal block screw (B). Tighten screw.

3. Connect ground wire

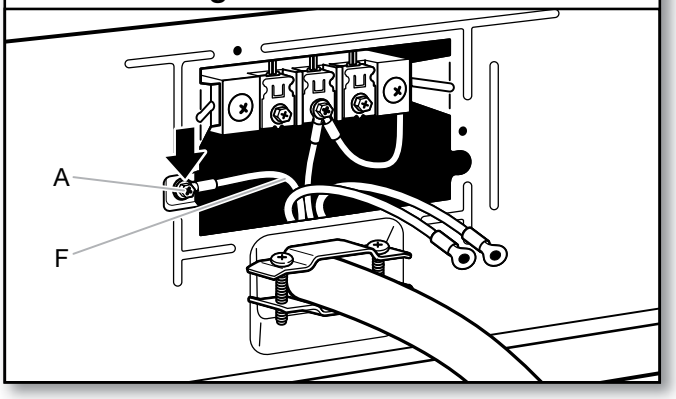

Connect ground wire (F) (green or bare) of power supply cord under green external ground conductor screw (A). Tighten screw.

4. Connect remaining wires

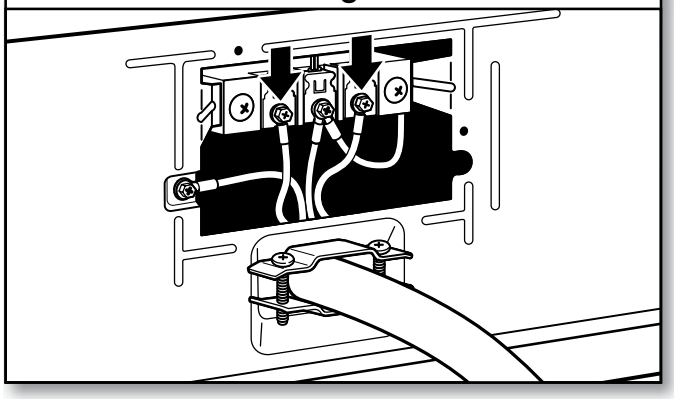

Connect remaining wires under outer terminal block screws. Tighten screws. Finally, reinsert tab of terminal block cover into slot of dryer rear panel. Secure cover with hold-down screw. Now, go to “Connect Outlet Hose.”

3-Wire Power Supply Cord Connection

Use where local codes permit connecting cabinet-ground conductor to neutral wire.

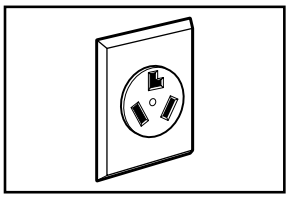

3-wire receptacle (NEMA type 10-30R)

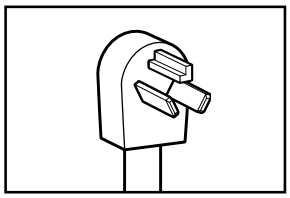

3-prong plug

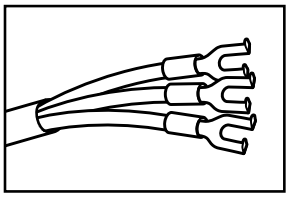

Spade terminals with upturned ends

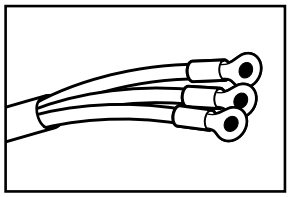

Ring terminals

1. Remove center screw

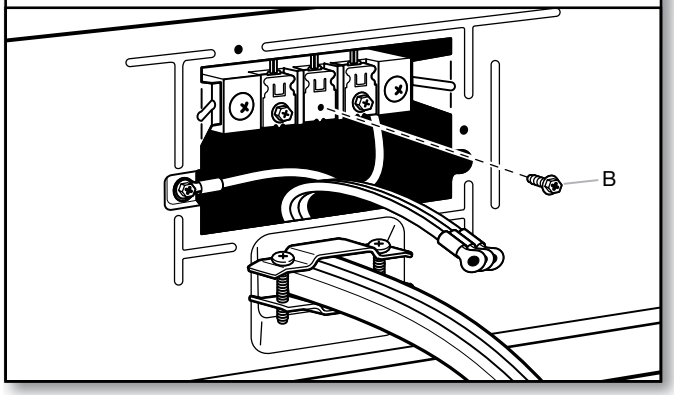

Remove center terminal block screw (B).

2. Connect neutral wire

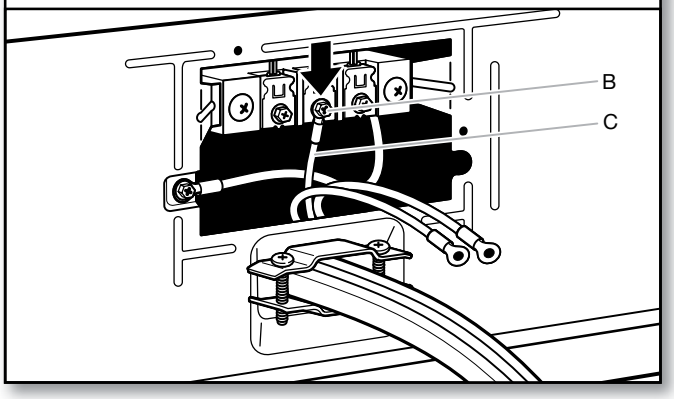

Connect neutral wire (white or center) (C) of power supply cord under center terminal block screw (B). Tighten screw.

3. Connect remaining wires

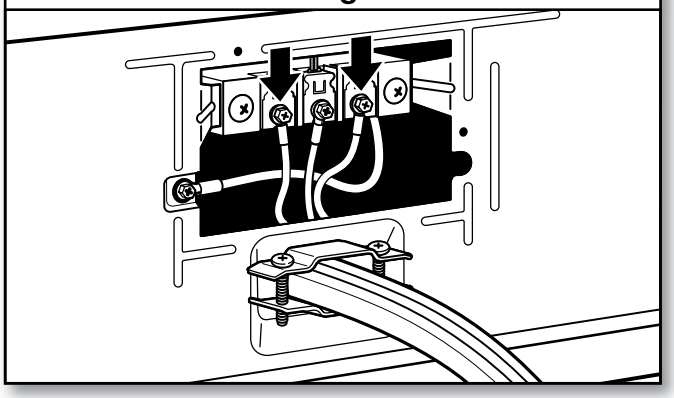

Connect remaining wires under outer terminal block screws. Tighten screws. Finally, reinsert tab of terminal block cover into slot of dryer rear panel. Secure cover with hold-down screw. Now, go to “Connect Outlet Hose.”

Direct Wire Connection

⚠ WARNING

Fire Hazard

Use 10 gauge copper wire.

Use a UL listed strain relief.

Disconnect power before making electrical connections.

Connect neutral wire (white or center wire) to center terminal.

Ground wire (green or bare wire) must be connected to green ground connector.

Connect remaining 2 supply wires to remaining 2 terminals (gold).

Securely tighten all electrical connections.

Failure to do so can result in death, fire, or electrical shock.

Direct wire strain relief

1. Attach direct wire strain relief

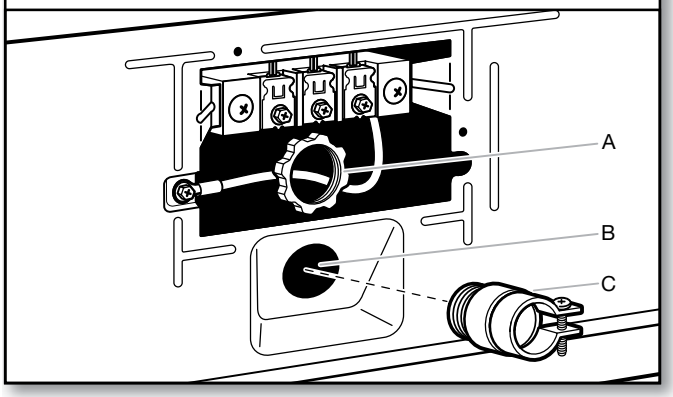

Unscrew the removable conduit connector (A) and any screws from a 3/4" (19 mm) UL listed strain relief (UL marking on strain relief). Put the threaded section of the strain relief (C) through the hole below the terminal block opening (B). Reaching inside the terminal block opening, screw the removable conduit connector (A) onto the strain relief threads and tighten securely.

2. Attach direct wire cable to strain relief

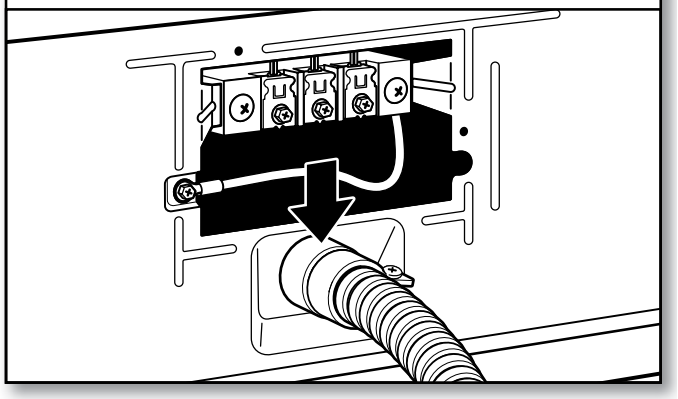

Put direct wire cable through the strain relief. The strain relief should have a tight fit with the dryer cabinet and be in a horizontal position. Tighten strain relief screw against the direct wire cable.

If your wiring looks like this:

4-wire direct connection:
Go to “4-Wire Direct Wire Connection”.

3-wire direct connection:
Go to “3-Wire Direct Wire Connection”.

4-Wire Direct Wire Connection

IMPORTANT: A 4-wire connection is required for mobile homes and where local codes do not permit 3-wire connections.

1. Prepare your 4-wire cable for direct connection

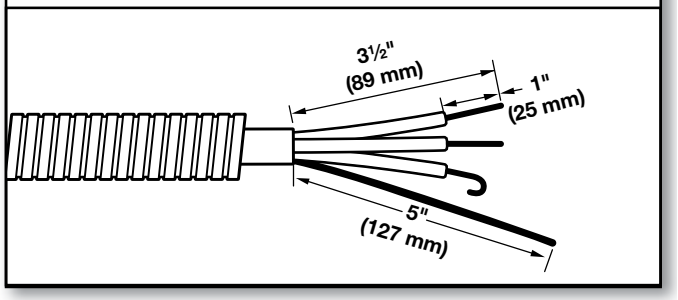

Direct wire cable must have 5 ft. (1.52 m) of extra length so dryer may be moved if needed.

Strip 5" (127 mm) of outer covering from end of cable, leaving bare ground wire at 5" (127 mm). Cut 1½" (38 mm) from remaining 3 wires. Strip insulation back 1" (25 mm). Shape ends of wires into hooks.

2. Prepare to connect neutral ground wire and neutral wire

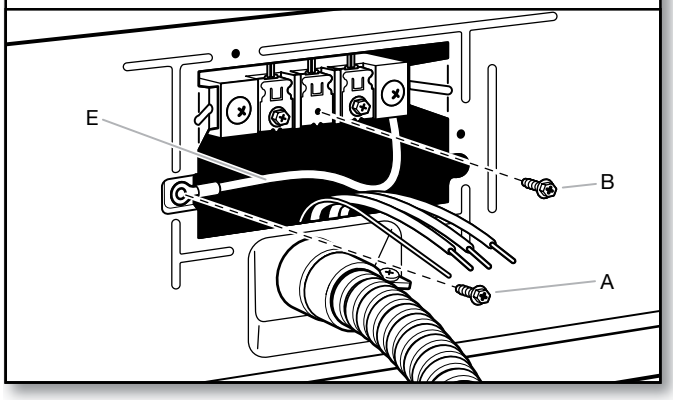

Remove center terminal block screw (B). Remove neutral ground wire (E) from green external ground conductor screw (A).

3. Connect neutral ground wire and neutral wire

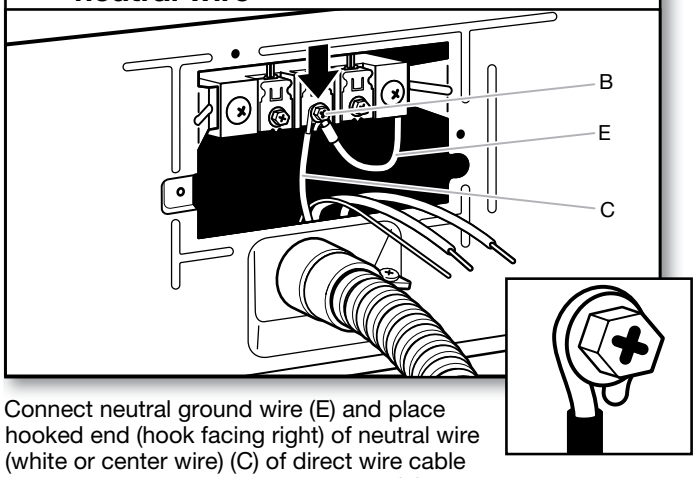

Connect neutral ground wire (E) and place hooked end (hook facing right) of neutral wire (white or center wire) (C) of direct wire cable under center screw of terminal block (B). Squeeze hooked ends together and tighten screw.

4. Connect ground wire

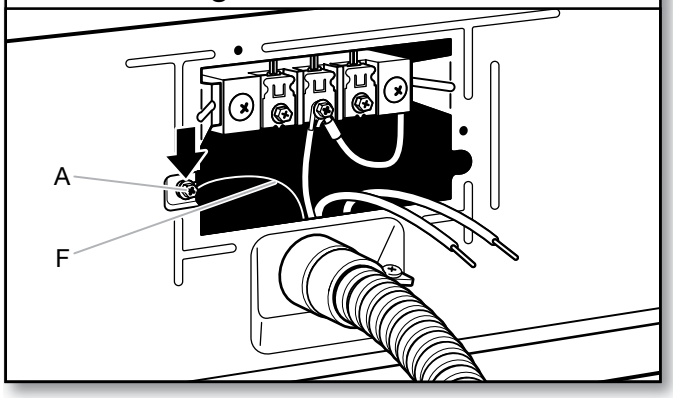

Connect ground wire (green or bare) (F) of direct wire cable under green external ground conductor screw (A). Tighten screw.

5. Connect remaining wires

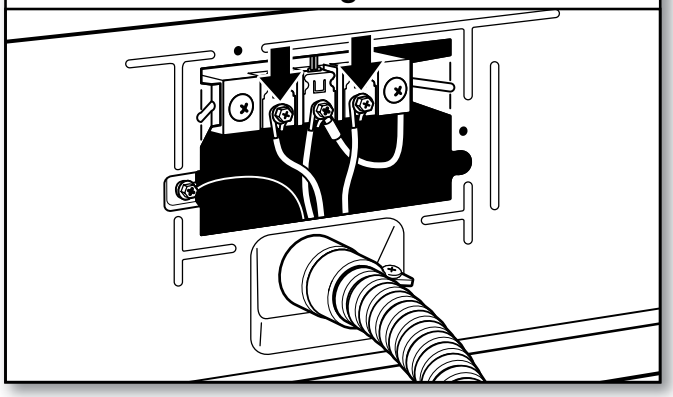

Place hooked ends of remaining direct wire cable wires under outer terminal block screws (hooks facing right). Squeeze hooked ends together and tighten screws. Finally, reinsert tab of terminal block cover into slot of dryer rear panel. Secure cover with hold-down screw. Now, go to “Connect Outlet Hose.”

3-Wire Direct Wire Connection

Use where local codes permit connecting cabinet-ground conductor to neutral wire.

1. Prepare your 3-wire cable for direct connection

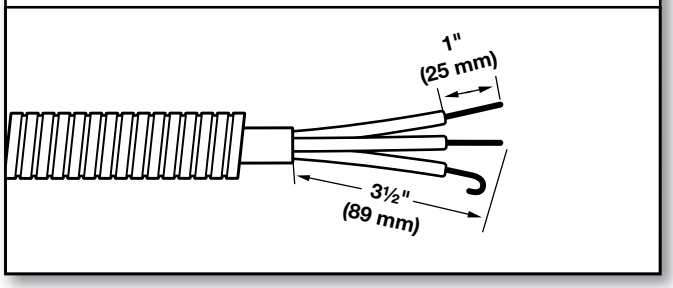

Direct wire cable must have 5 ft. (1.52 m) of extra length so dryer may be moved if needed.

Strip 3½" (89 mm) of outer covering from end of cable. Strip insulation back 1" (25 mm). If using 3-wire cable with ground wire, cut bare wire even with outer covering. Shape wire ends into hooks.

2. Remove center screw

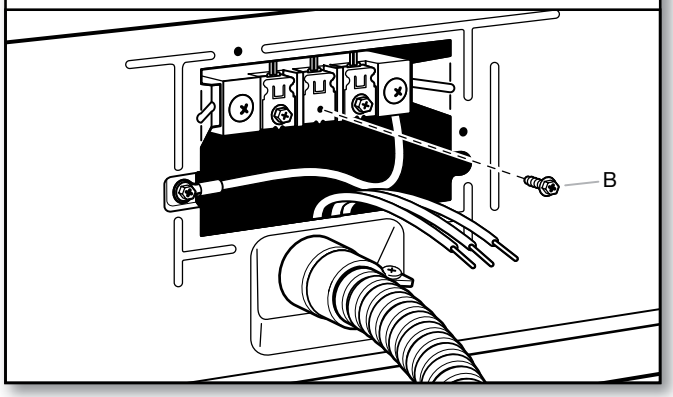

Remove center terminal block screw (B).

3. Connect neutral wire

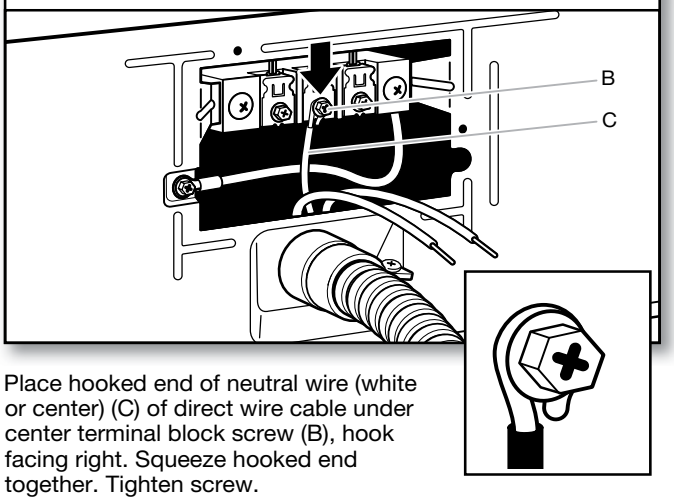

Place hooked end of neutral wire (white or center) (C) of direct wire cable under center terminal block screw (B), hook facing right. Squeeze hooked end together. Tighten screw.

4. Connect remaining wires

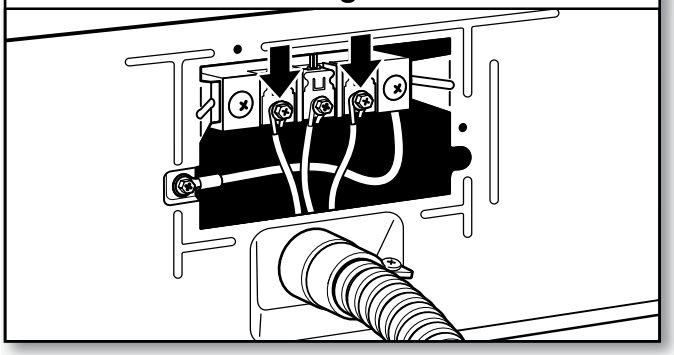

Place hooked ends of remaining direct wire cable wires under outer terminal block screws (hooks facing right). Squeeze hooked ends together and tighten screws. Finally, reinsert tab of terminal block cover into slot of dryer rear panel. Secure cover with hold-down screw. Now, go to “Connect Outlet Hose.”

Optional External Ground for 3-Wire Connection (Power Supply Cord Shown)

IMPORTANT: You must verify with a qualified electrician that this grounding method is acceptable before connecting.

1. Prepare to connect neutral ground wire and neutral wire

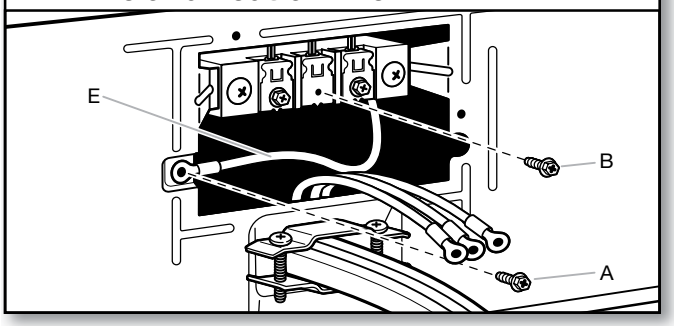

Install the correct strain relief for your electrical connection method, as shown on page 8 or 10.

Remove center terminal block screw (B). Remove neutral ground wire (E) from green external ground conductor screw (A).

2. Connect neutral ground wire and neutral wire

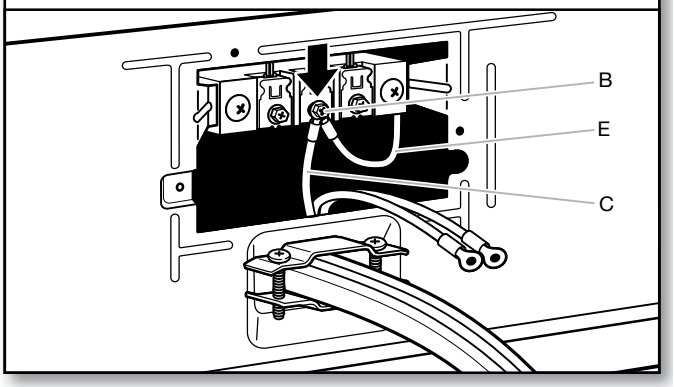

Connect neutral ground wire (E) and neutral wire (white or center wire) (C) of power supply cord or cable under center, terminal block screw (B). Tighten screw.

3. Connect remaining wires

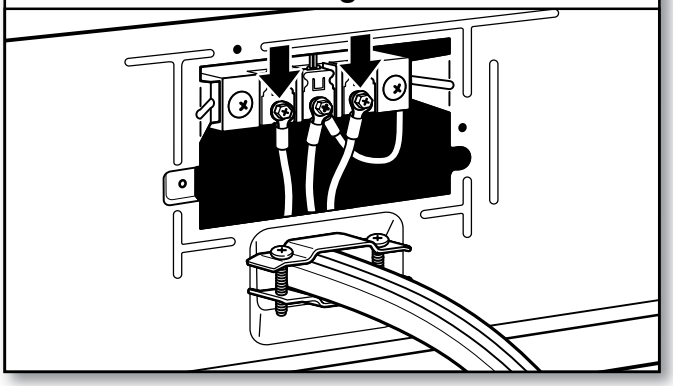

Place ends of remaining wires under outer terminal block screws. Tighten screws.

4. Connect external ground wire

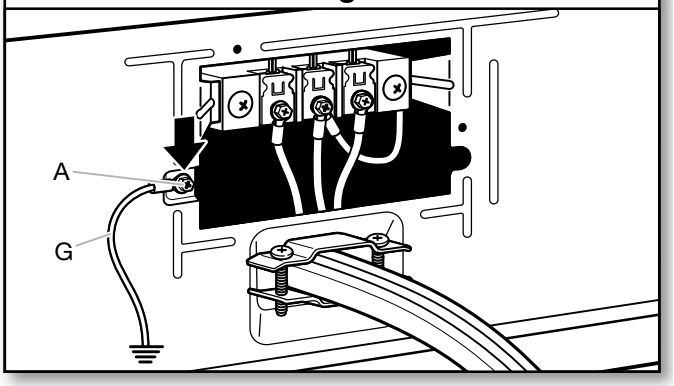

Connect a separate copper ground wire (G) under the green external ground conductor screw (A) to an adequate ground. Finally, reinsert tab of terminal block cover into slot of dryer rear panel. Secure cover with hold-down screw. Now, go to “Connect Outlet Hose.”

Connect Outlet Hose

1. Attach hose

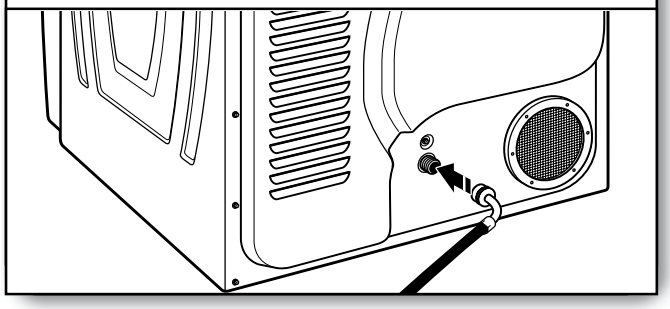

Attach the goose neck fitting of the provided 6' (1829 mm) drain hose to the drain valve at the bottom of dryer back panel. Screw on coupling by hand until it is seated on valve connector.

2. Tighten coupling

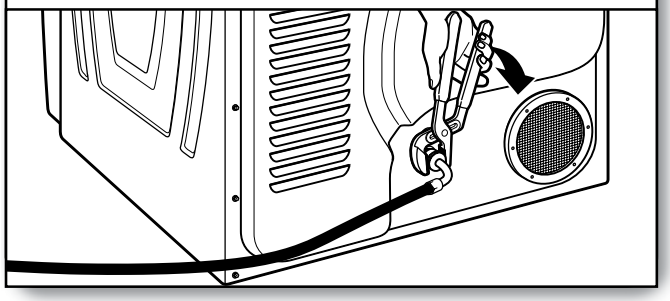

Using channel locks, tighten the coupling an additional two-thirds turn.

NOTE: Do not over tighten. Damage to the coupling can result.

3. Secure drain hose to back of dryer (optional)

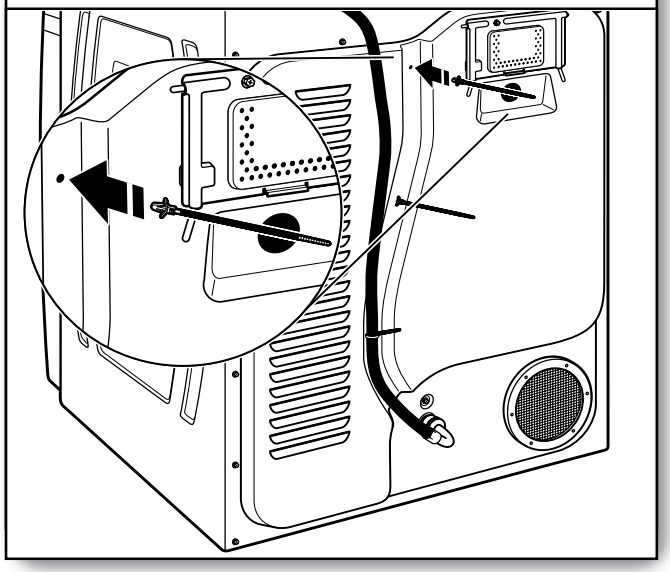

Push each of the 3 triangular-end cable ties into the holes in the groove of the back panel and secure drain hose to dryer.

4. Secure drain hose system

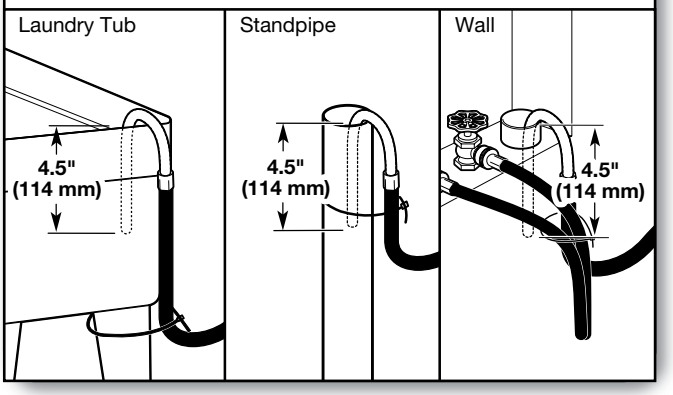

Secure drain hose to laundry tub leg, drain standpipe, or inlet hoses for wall standpipe with cable tie.

Level Dryer

1. Level dryer

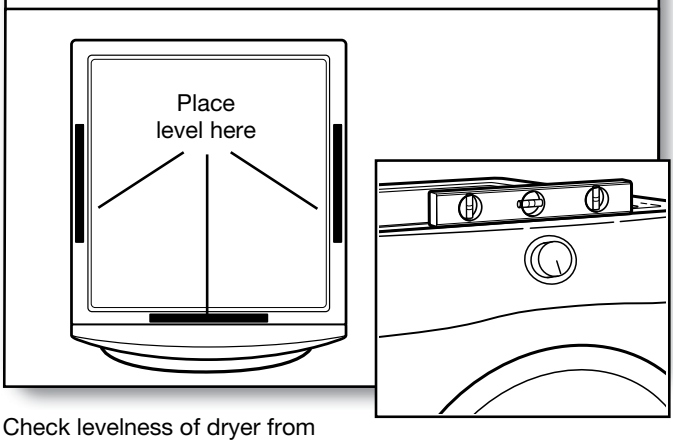

Check levelness of dryer from side to side. Repeat from front to back.

NOTE: The dryer must be level for the moisture sensing system to operate correctly. If forward slope of dryer is greater than 1" (25 mm), water could run out from front of filter.

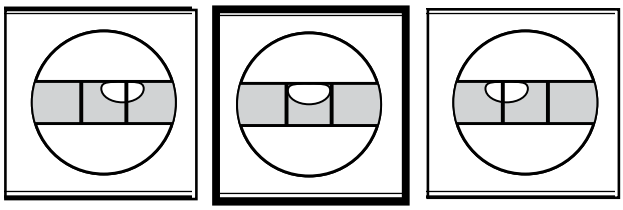

Not Level | **LEVEL** | Not Level

2. Adjust leveling legs

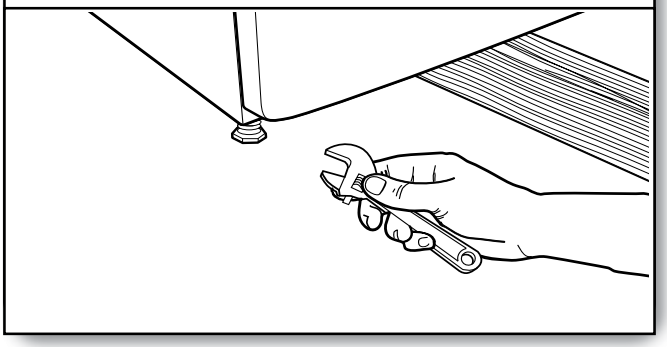

If dryer is not level, prop up using a wood block, use wrench to adjust legs up or down, and check again for levelness. Once dryer is level, make sure all four legs are snug against the floor and dryer does not rock.

⚠ WARNING

Electrical Shock Hazard

Plug into a grounded 3 prong outlet.

Do not remove ground prong.

Do not use an adapter.

Do not use an extension cord.

Failure to follow these instructions can result in death, fire, or electrical shock.

3. Plug into a grounded 3 prong outlet

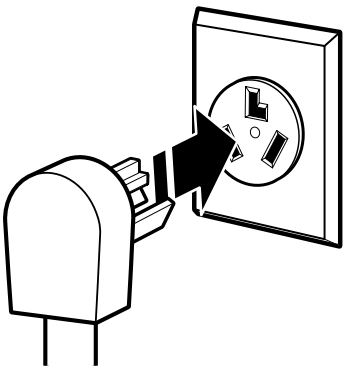

4. Check for leaks

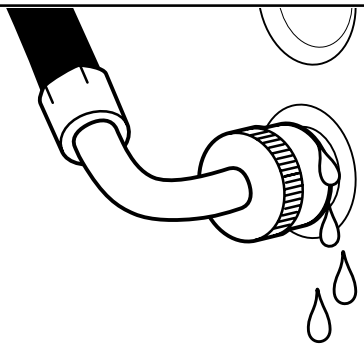

While running the first cycle, check that there are no leaks from the drain hose.

Complete Installation Checklist

- ❑ Check that all parts are now installed. If there is an extra part, go back through steps to see what was skipped.
- ❑ Check that dryer is level. See “Level Dryer.”
- ❑ Check that you have all of your tools.
- ❑ Dispose of/recycle all packaging materials.
- ❑ Check dryer’s final location.
- ❑ Remove film on console and any tape remaining on dryer.
- ❑ Wipe dryer drum interior thoroughly with a damp cloth to remove any dust.
- ❑ Read “Dryer Use” in your Use and Care Guide.
- ❑ For power supply cord installation, plug into a grounded outlet. For direct wire installation, turn on Power.
- ❑ Select a Timed Dry heated cycle, and start dryer.

  If dryer will not start, check the following:
  - Controls are set in a running or “On” position.
  - Start button has been pushed firmly.
  - Dryer is plugged into an outlet and/or electrical supply.
  - Household fuse is intact and tight, or circuit breaker has not tripped.
  - Dryer door is closed.

This dryer automatically runs an installation diagnostic routine at the start of its first cycle.

NOTE: You may notice an odor when dryer is first heated. This odor is common when heating element is first used. The odor will go away.

Door Reversal (optional)

The following instructions are for models with a round and square-shaped doors.

Tools needed:

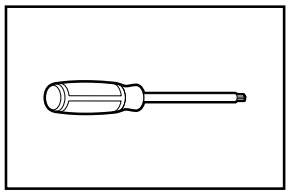

Min. 8" long TORX T25® † screwdriver

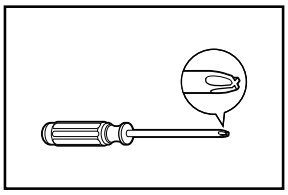

#2 Phillips screwdriver

Reverse door swing round-shaped door – single handle

1. Remove door from dryer

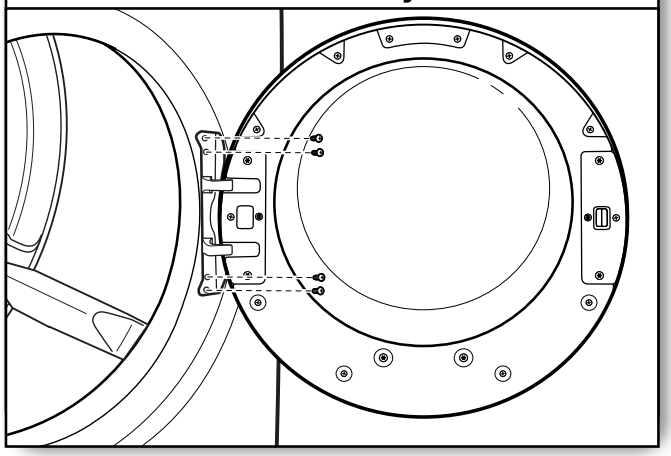

IMPORTANT: If the protective film has not yet been removed from the dryer, peel the film from the dryer door before proceeding.

Using a TORX T25® screwdriver, remove the 4 screws securing the door hinge to the dryer and lift up and out to remove the door. Place the door on a soft towel or other non-scratch surface. Reinstall the 4 screws in the holes.

2. Move the door strike

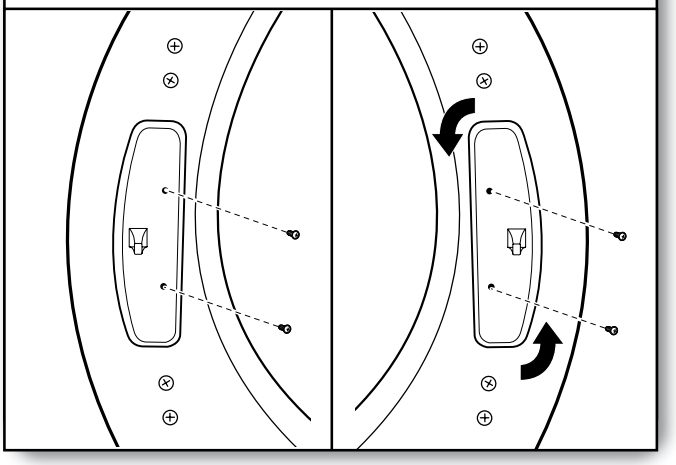

Using a T25® screwdriver, remove the 2 screws securing the door strike to the door frame of the dryer. Rotate the strike 180° and attach to the opposite side of dryer door frame, as shown.

3. Remove inner door from outer door

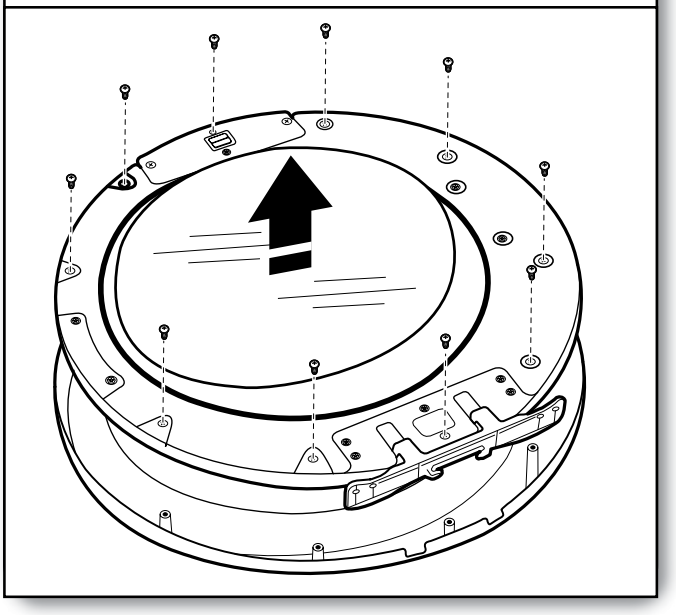

Position the door with the inside of the door facing up. Using a Phillips screwdriver, remove the 10 screws securing the inner door to the outer door. Lift off the inner door and set aside.

† ® TORX and T25 are registered trademarks of Acument Intellectual Properties, LLC.

4. Remove outer window assembly from trim ring

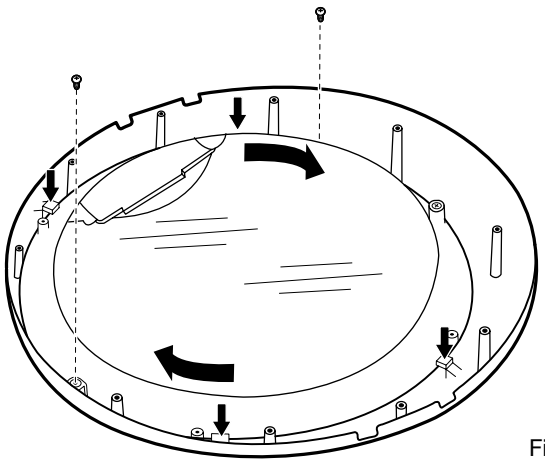

Fig. A

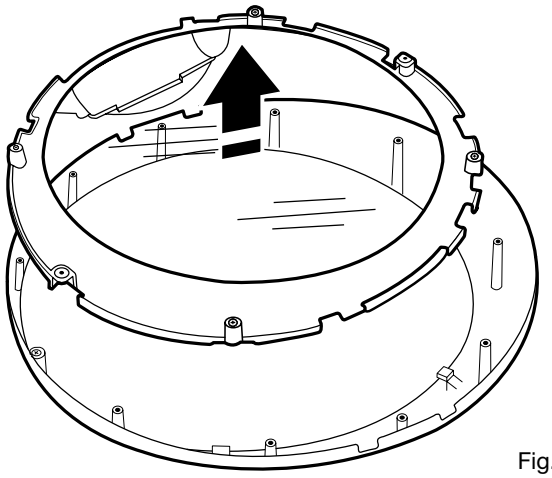

Fig. B

Using a Phillips screwdriver, remove the 2 screws from the outer window retainer and rotate the outer window assembly clockwise until the square notches line up with the 4 tabs on the trim ring indicated with arrows in the figure A above. Then lift out the outer window and retainer up and off the trim ring and set aside (B).

5. Reverse outer window assembly

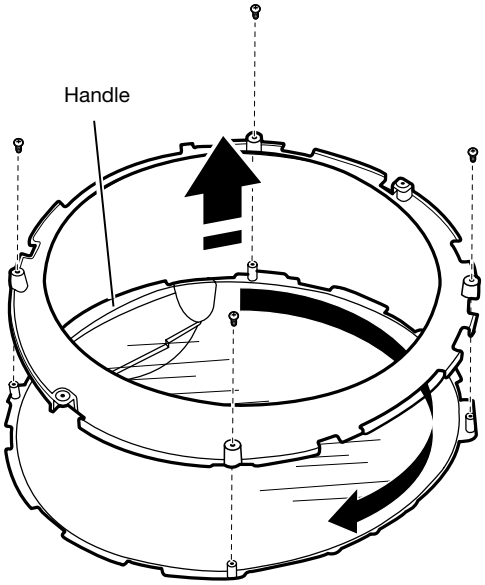

Fig. A

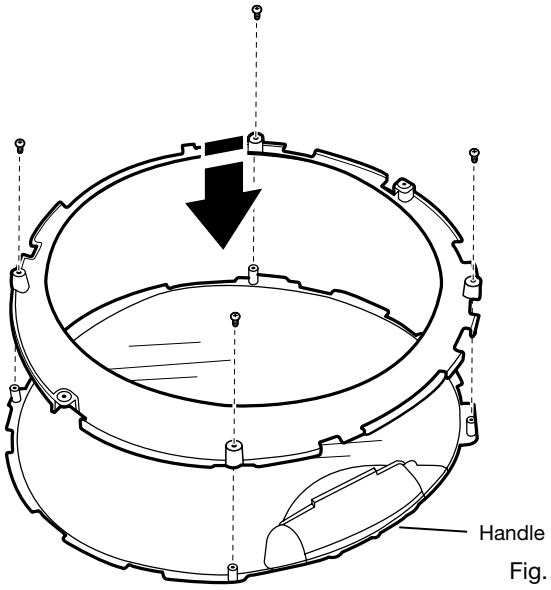

Fig. B

Using a Phillips screwdriver, remove the 4 screws from the outer window retainer and lift off the trim ring from the window (A). Rotate trim ring 180° and secure with the 4 screws removed earlier (B).

6. Rotate and reassemble outer window assembly to trim ring

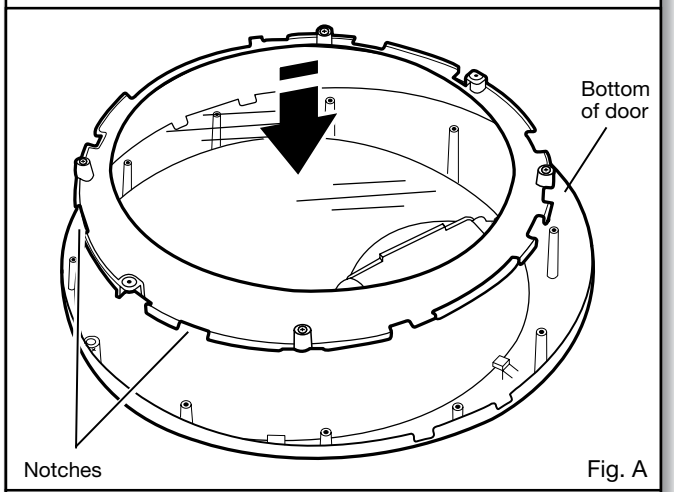

Fig. A

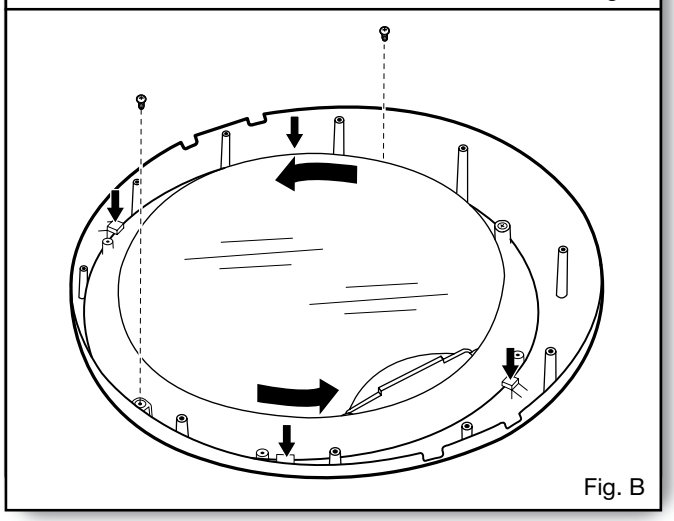

Fig. B

With the edge with 2 notches at the top, align the notches on the outer window assembly with the tabs on the trim ring and lower into place as shown in figure A.

Rotate the outer window assembly counterclockwise to lock tabs into place (figure B). Using a Phillips screwdriver, secure with 2 screws removed earlier.

IMPORTANT: Do not overtighten.

7. Remove hinge and latch

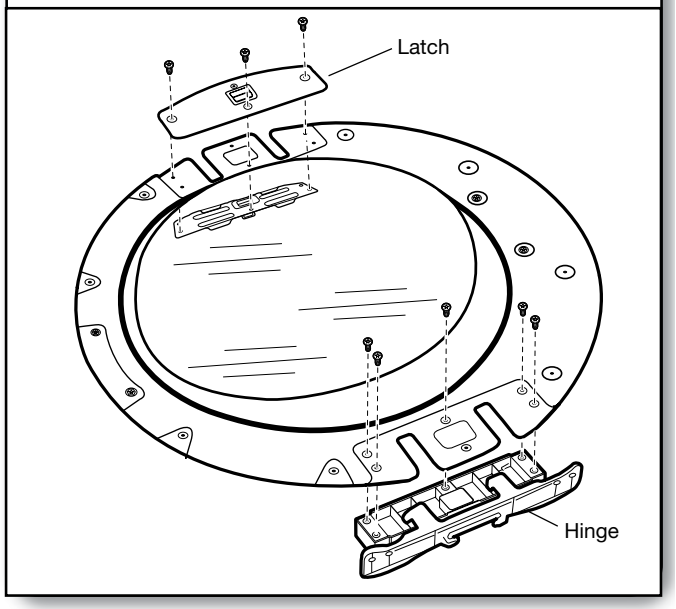

Using a T25® screwdriver, remove the 3 screws securing the latch plate and latch backing plate and the 5 screws holding the hinge assembly in place.

8. Reinstall hinge and latch on opposite sides

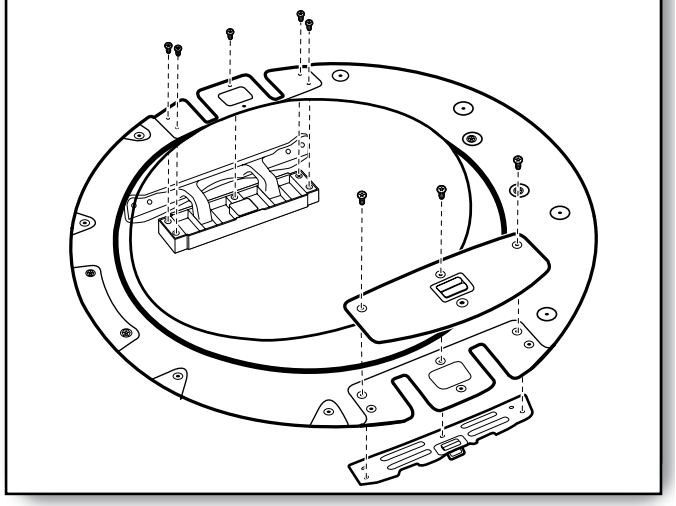

Using a T25® screwdriver, reinstall the latch plate, latch backing plate, and hinge assembly on the opposite sides from which they were removed.

9. Reinstall inner door assembly

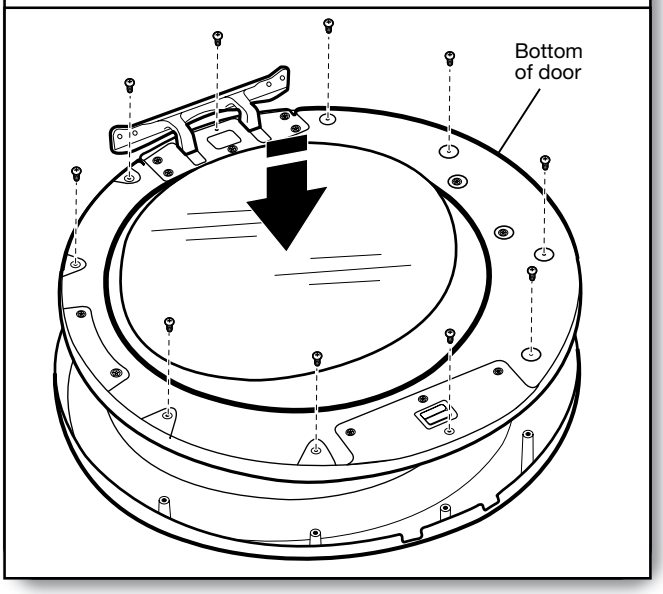

Position the door with the inside of the door facing up. Using a Phillips screwdriver, reinstall the 10 screws securing the inner door to the outer door.

10. Reinstall door on dryer

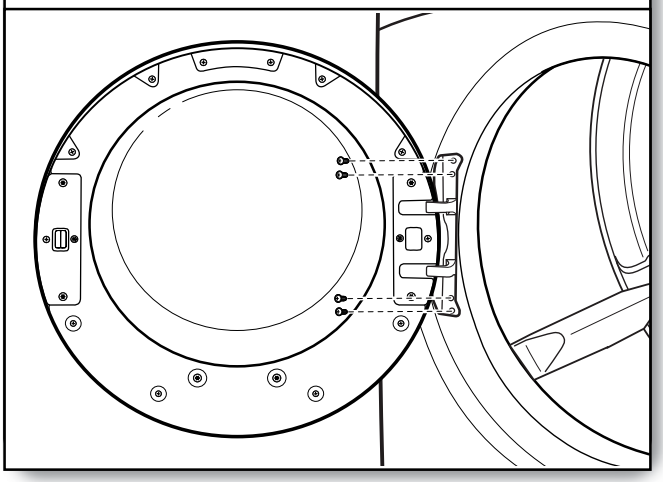

Using a T25® screwdriver, remove the 4 screws on the dryer. Insert the tabs on the hinge into the mounting slot and slide down to engage the top tab. Secure in place with the 4 screws removed earlier.

Reverse door swing round-shaped door – double handle

1. Remove door from dryer

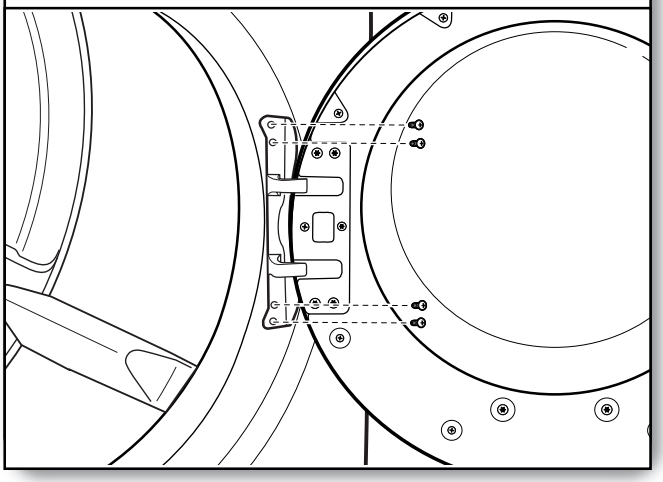

IMPORTANT: If the protective film has not yet been removed from the dryer, peel the film from the dryer door before proceeding.

Using a T25® screwdriver, remove the 4 screws securing the door hinge to the dryer and lift up and out to remove the door. Place the door on a soft towel or other non-scratch surface. Reinstall the 4 screws in the holes.

2. Move the door strike

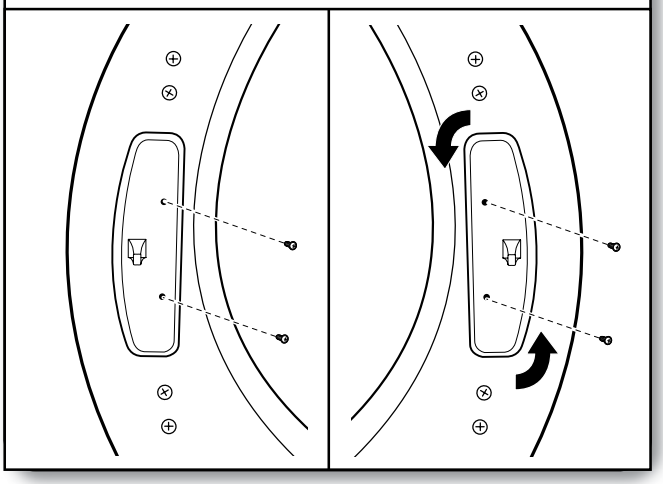

Using a T25® screwdriver, remove the 2 screws securing the door strike to the door frame of the dryer. Rotate the strike 180° and attach to the opposite side of dryer door frame, as shown.

3. Remove inner door from outer door

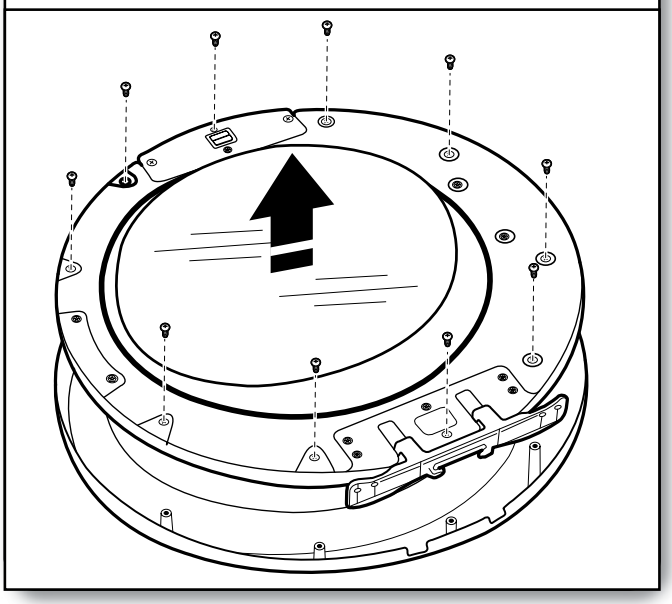

Position the door with the inside of the door facing up. Using a Phillips screwdriver, remove the 10 screws securing the inner door to the outer door. Lift off the inner door and set aside.

4. Remove hinge and latch

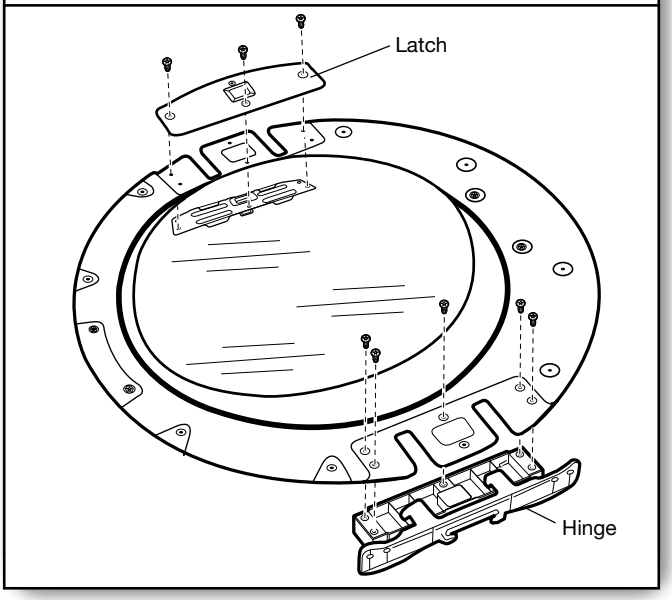

Using a T25® screwdriver, remove the 3 screws securing the latch plate and latch backing plate and the 5 screws holding the hinge assembly in place.

5. Reinstall hinge and latch on opposite sides

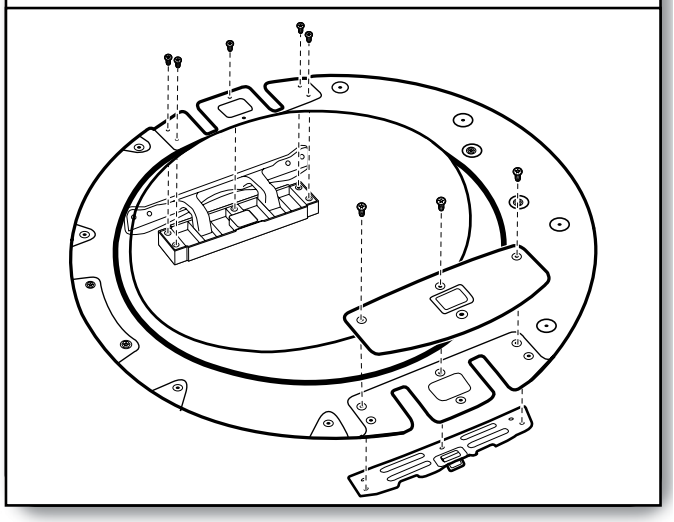

Using a T25® screwdriver, reinstall the latch plate and latch backing plate with the 3 screws removed earlier and the hinge assembly with the 5 screws on the opposite sides from which they were removed.

6. Reinstall inner door assembly

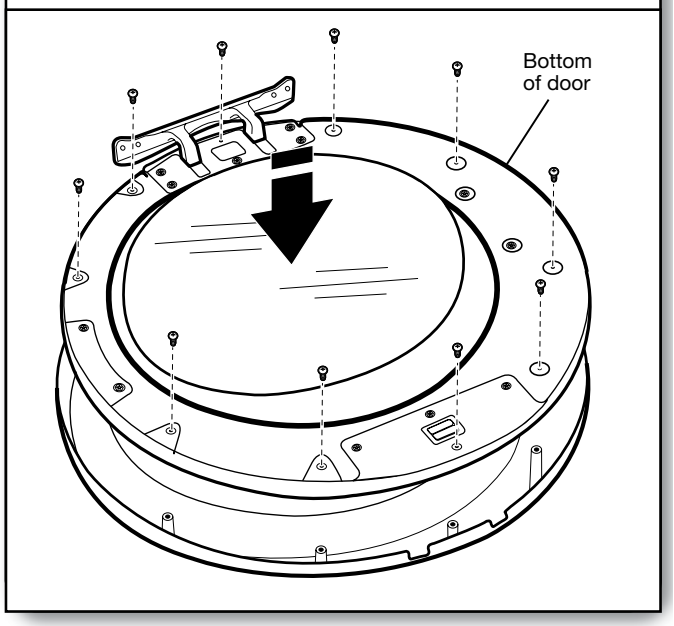

Position the door with the inside of the door facing up. Using a Phillips screwdriver, reinstall the 10 screws securing the inner door to the outer door.

7. Reinstall door on dryer

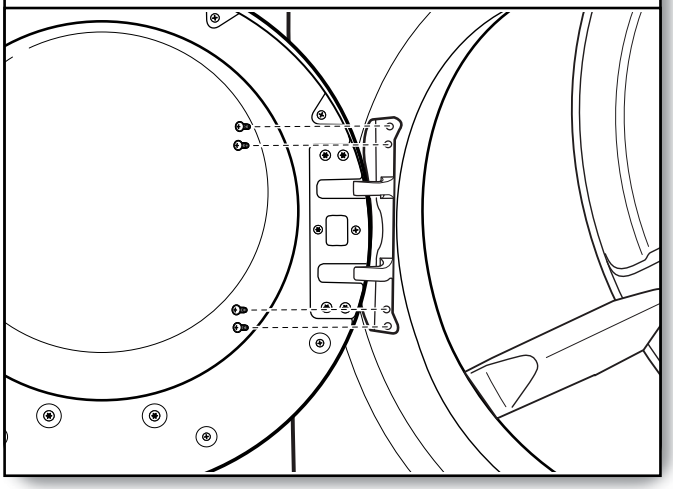

Using a T25® screwdriver, remove the 4 screws on the dryer. Insert the tabs on the hinge into the mounting slot and slide down to engage the top tab. Secure in place with the 4 screws removed earlier.

Reverse door swing square-shaped door

1. Remove door from dryer

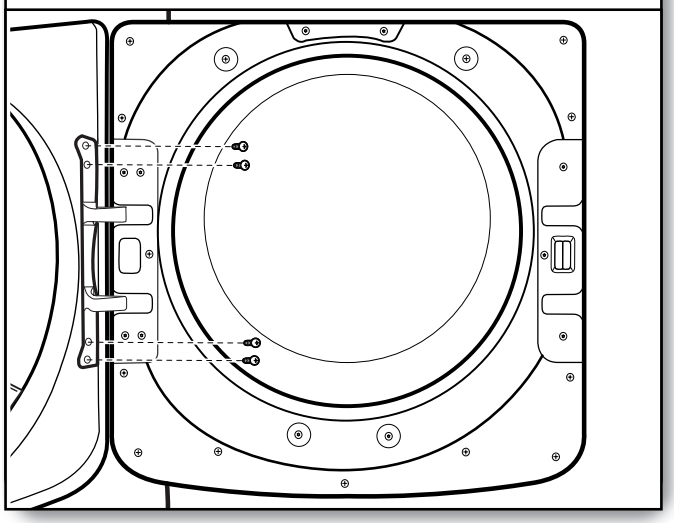

Using a T25® screwdriver, remove the 4 screws securing the door hinge to the dryer and lift up and out to remove the door. Place the door on a soft towel or other non-scratch surface. Retain or set aside the 4 screws.

2. Move the door strike

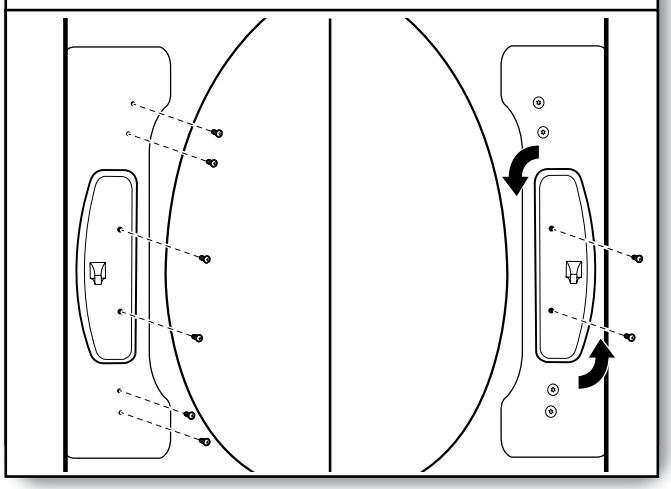

Using a T25® screwdriver, remove the 2 screws securing the door strike to the door frame of the dryer. Remove the 4 screws above and below the door strike and set aside for later use. Rotate the strike 180° and attach to the opposite side of dryer door frame, as shown.

3. Remove inner door from outer door

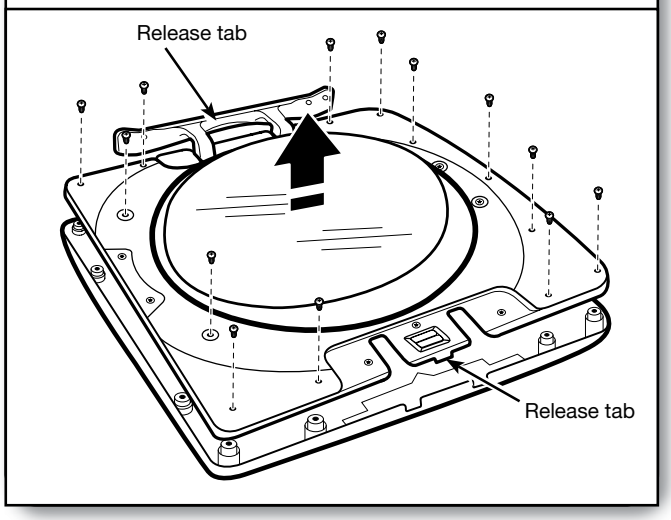

Position the door with the inside of the door facing up. Using a Phillips screwdriver, remove the 13 screws securing the inner door to the outer door. Lift off the inner door and set aside.

NOTE: There is a small release tab on each side of the door. If the inner and outer door do not separate easily, slide a credit card, putty knife, or similar flat object between the inner and outer doors at the locations shown to release the tab.

4. Remove hinge and latch from inner door

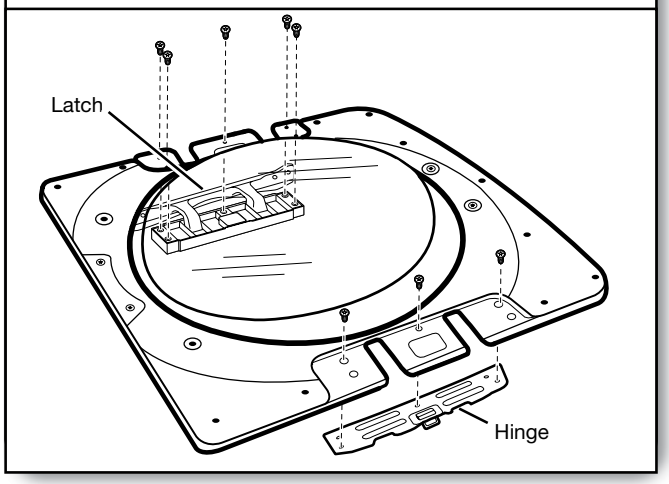

Using a T25® screwdriver, remove the 3 screws securing the latch plate and the 5 screws holding the hinge assembly in place.

5. Reinstall hinge and latch on opposite sides

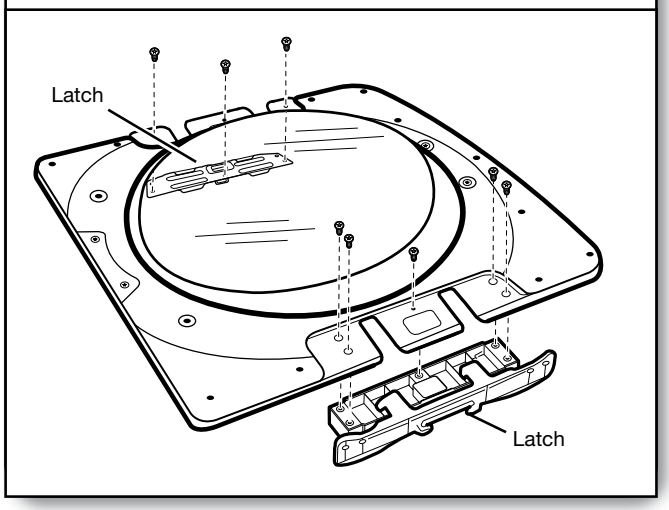

Using a T25® screwdriver, reinstall the latch plate and hinge assembly on the opposite sides from which they were removed.

6. Reattach inner door to outer door

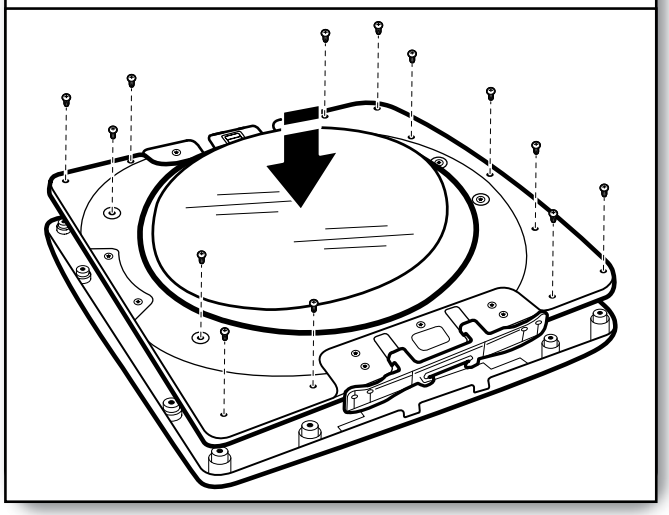

Position the inner door on the outer door assembly. Using a Phillips screwdriver, secure with the 13 screws removed earlier.

7. Reattach door to dryer

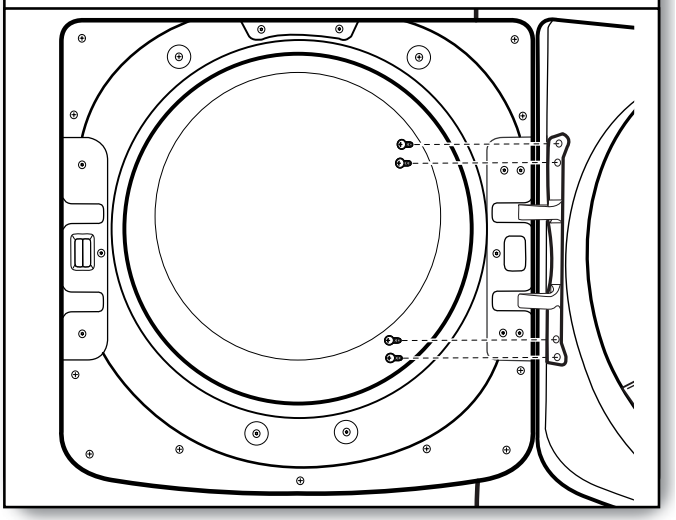

Using a T25® screwdriver, reinstall the 4 screws securing the door hinge to the dryer.

Troubleshooting

See the Use and Care Guide or visit our website and reference Frequently Asked Questions to possibly avoid the cost of a service call.

Notes

Multimedia Enhanced

Section 4: Component Access

This section provides service parts access, removal, and installation instructions for the "HybridCare™ Dryer with Heat Pump Technology."

- Component Locations
- Removing the Top Panel & Console
- Removing the User Interface (UI)
- Removing the CCU and REX
- Removing the Front Panel & Door Switch
- Removing the Moisture Sensor
- Removing the Drum Light
- Removing the Outlet Thermistor
- Removing the Belt, Drum, and Rollers
- Removing the Drive Motor
- Removing the Drain Pump & Float Assembly
- Removing the Reed Lint Switch
- Removing the Rear Panel
- Removing the Heater
- Removing the High Limit
- Removing the Auxiliary Fan
- Removing the Heat Pump (Base Assembly)
- Notes

Video Available Look for this ICON throughout Section 4

Component Locations

COMPONENT LOCATIONS — INTERNAL COMPONENTS

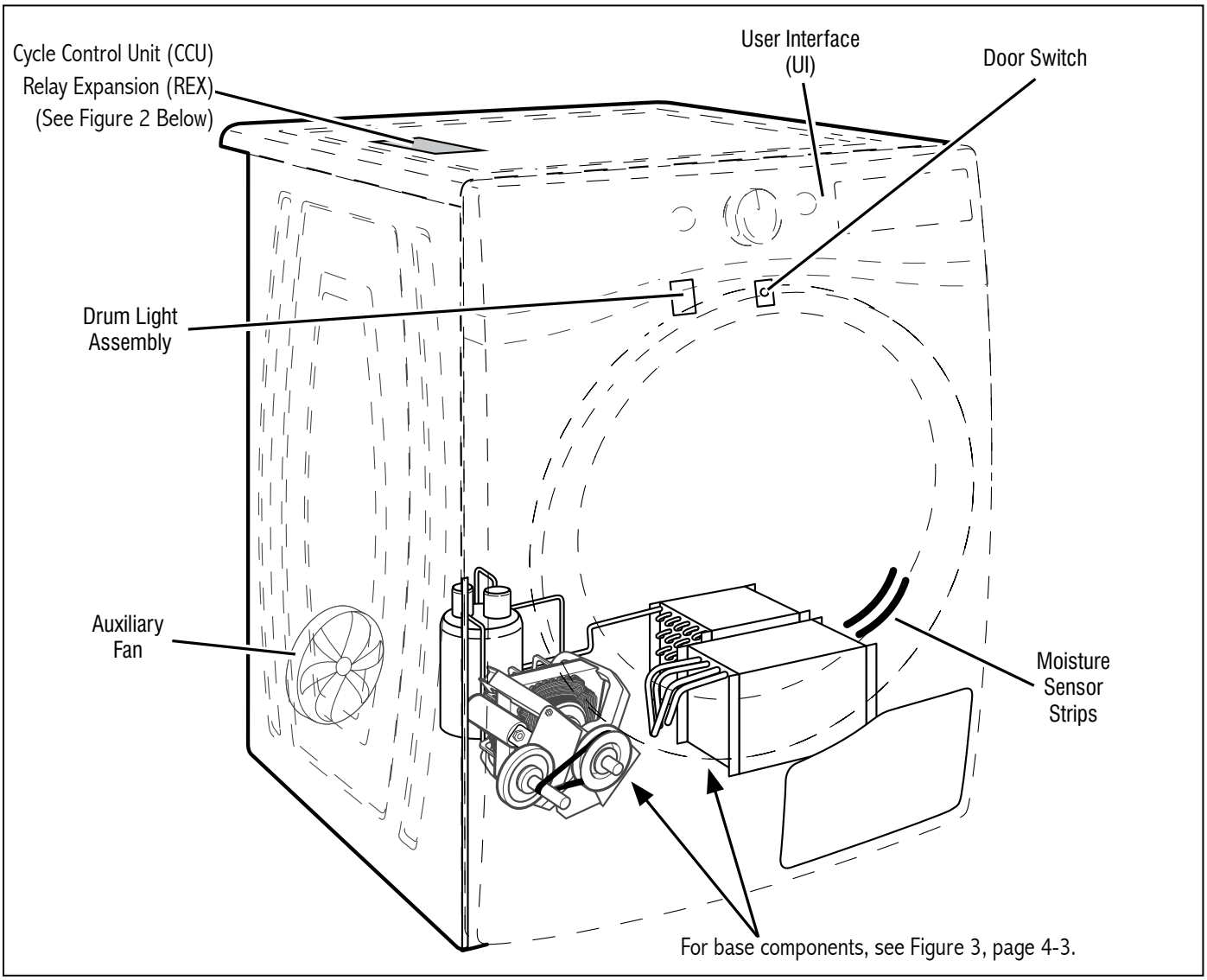

Figure 1 - Internal Components

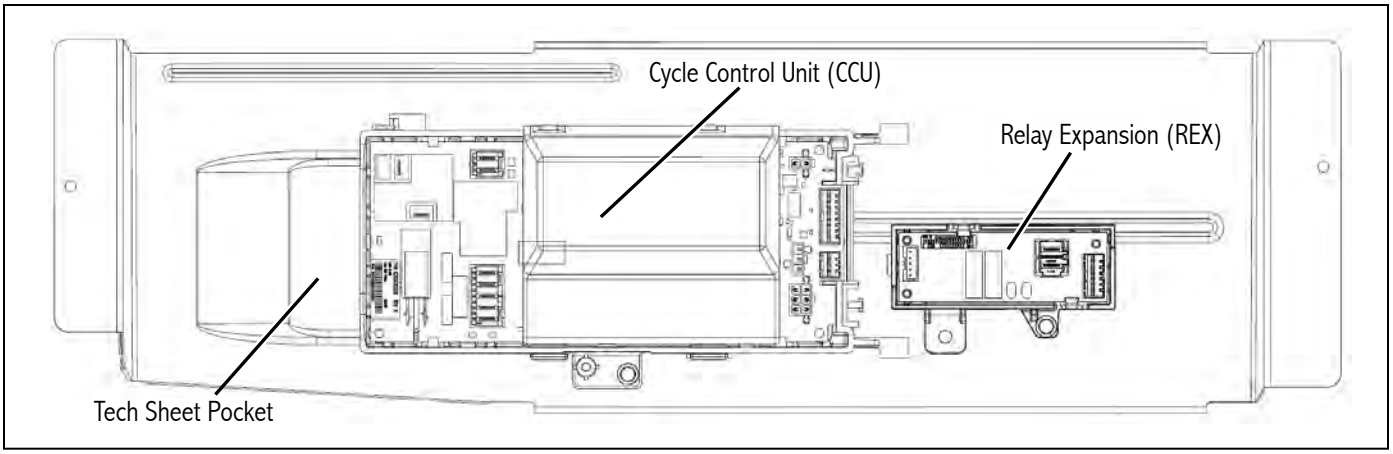

Figure 2 - CCU & REX Bracket Assembly

Component Locations

COMPONENT LOCATIONS — BASE COMPONENTS

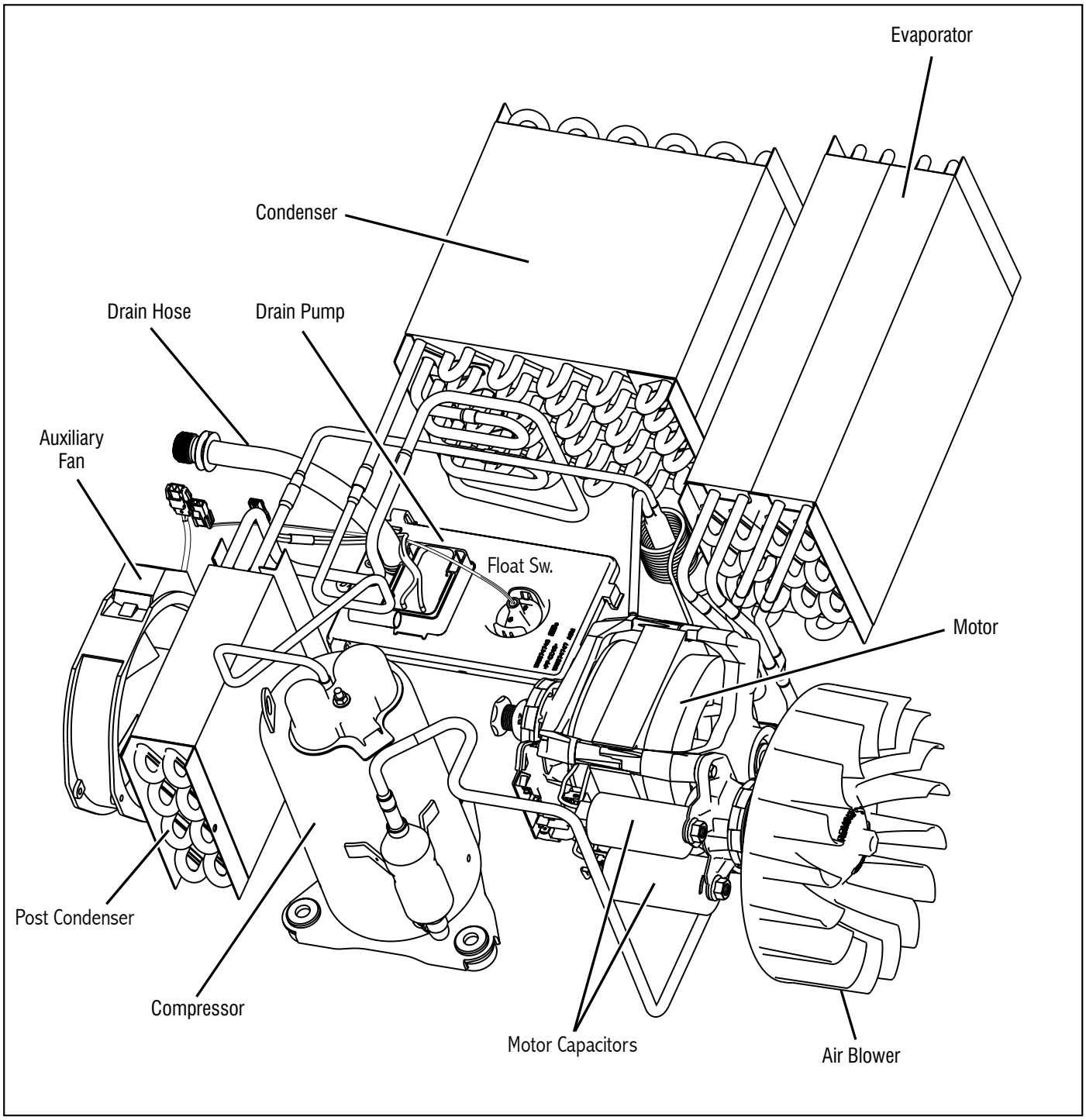

Figure 3 - Base Components

Removing the Top Panel & Console

⚠ WARNING

Electrical Shock Hazard

Disconnect power before servicing.

Replace all parts and panels before operating.

Failure to do so can result in death or electrical shock.

To Remove the Top Panel

1. Unplug dryer or disconnect power.
2. Remove the two (2) 1/4” hex-head screws from the top panel as illustrated in Figure 1.

Figure 1

3. Lift the rear of the top panel, pull back, and remove top panel from the dryer.

To Remove the Console

1. After removing the top panel, remove connector P2 from the CCU and disconnect the in-line connector between the UI and drum light (see Figure 2).

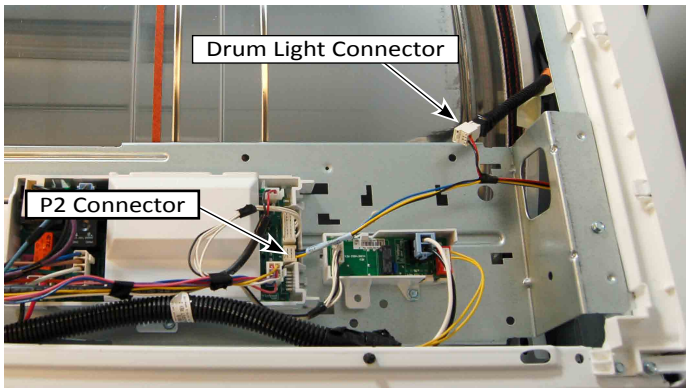

Figure 2

2. Remove the two (2) 1/4” hex head screws securing the console to the cabinet (see Figure 3).

Figure 3

3. Lift up on console and pull out to remove from dryer.

Removing the User Interface (UI)

⚠ WARNING

Electrical Shock Hazard

Disconnect power before servicing.

Replace all parts and panels before operating.

Failure to do so can result in death or electrical shock.

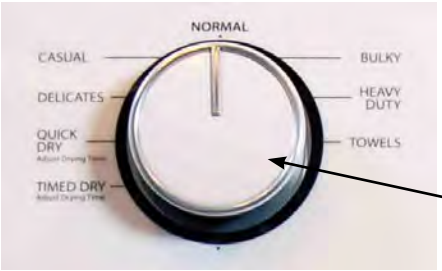

Figure 1

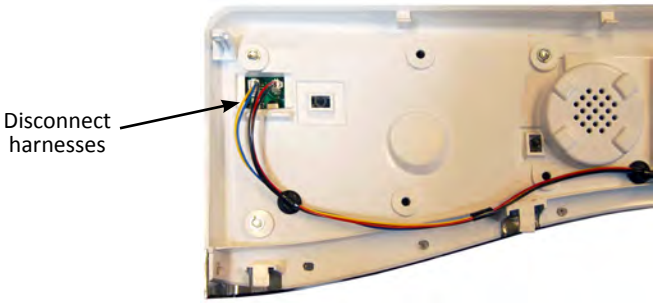

Figure 2

To Remove the User Interface

1. Unplug dryer or disconnect power.
2. Perform the procedures on page 4-4, “Removing the Top Panel” and “Removing the Console” prior to performing the following steps.
3. Pull the cycle selector knob off the switch shaft (see Figure 1).
4. Disconnect the two (2) harnesses from the user interface (see Figure 2).
5. Remove the eight (8) 1/4” hex-head screws securing the user interface to the console as illustrated in Figure 3.
6. Separate user interface from console assembly.

REASSEMBLY NOTE: When reinstalling the user interface to the console, only hand tighten the eight (8) hex-head screws until snug. Using a power driver will strip the screw holes and stress the capacitive touch user interface.

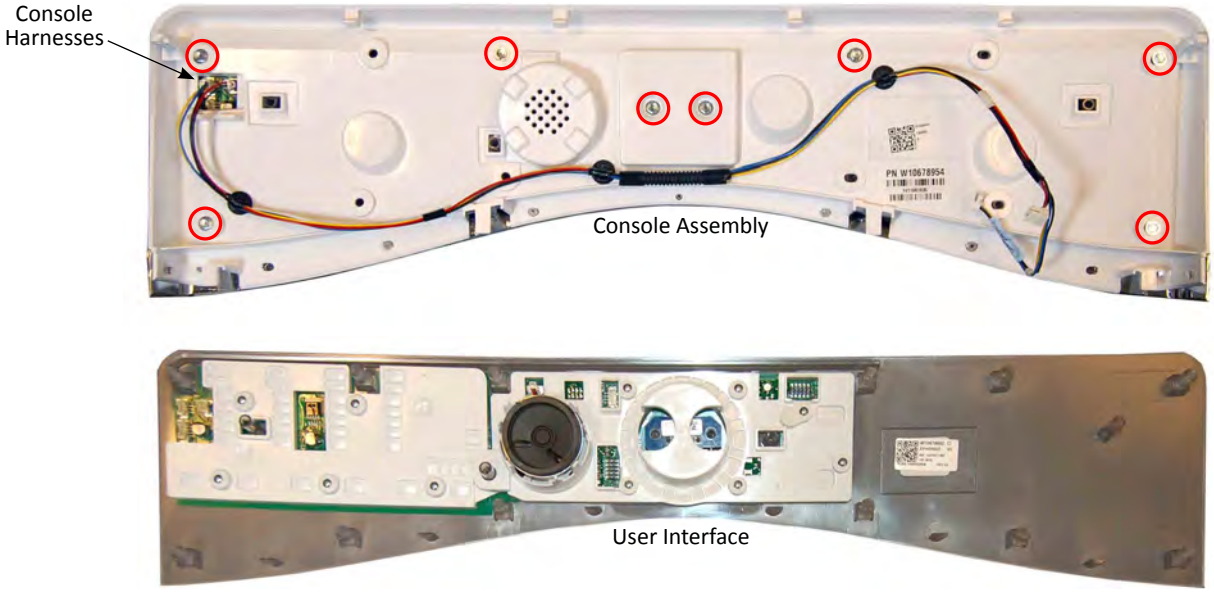

Figure 3

Removing the CCU and REX

⚠ WARNING

Electrical Shock Hazard

Disconnect power before servicing.

Replace all parts and panels before operating.

Failure to do so can result in death or electrical shock.

To Remove the Cycle Control Unit (CCU)

IMPORTANT: Electrostatic Discharge (ESD) Sensitive Device. Failure to follow the ESD precautions outlined at the beginning of Section 6 "Testing" may destroy, damage, or weaken the main control assembly.

1. Unplug dryer or disconnect power.
2. Perform the procedures on page 4-4, "Removing the Top Panel" prior to performing the following steps.
3. Disconnect all connectors from the CCU (see Figure 1).
4. Using a 1/4" nut driver, remove the one (1) hex-head screw securing the CCU to the control bracket.

Cycle Control Unit (Figure 1)

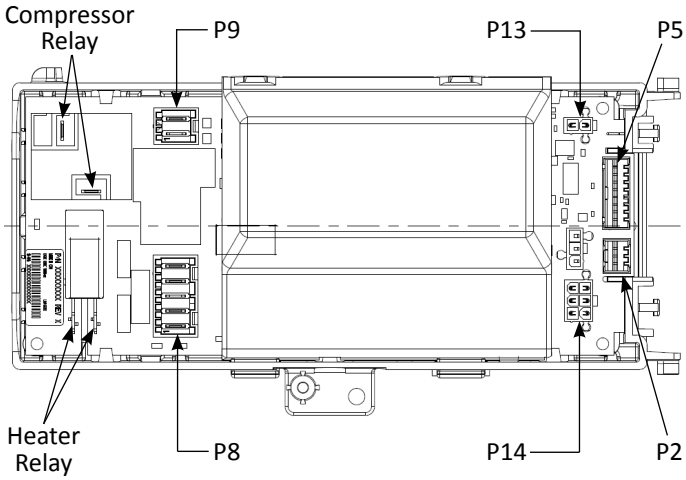

Connector	Component(s)
Compressor Relay	Compressor
Heater Relay	Heater
P2	User Interface
P5	Relay Expansion
P8	Drain Pump Door Switch Float Switch
P9	Motor
P13	Moisture Sensor
P14	Compressor Thermistor Outlet Thermistor Reed Lint Switch

To Remove the Relay Expansion (REX)

IMPORTANT: Electrostatic Discharge (ESD) Sensitive Device. Failure to follow the ESD precautions outlined at the beginning of Section 6 "Testing" may destroy, damage, or weaken the main control assembly.

1. Unplug dryer or disconnect power.
2. Perform the procedures on page 4-4, "Removing the Top Panel" prior to performing the following steps.
3. Disconnect all connectors from the REX (see Figure 1).
4. Using a 1/4" nut driver, remove the one (1) hex-head screw securing the REX to the control bracket.

Relay Expansion (Figure 2)

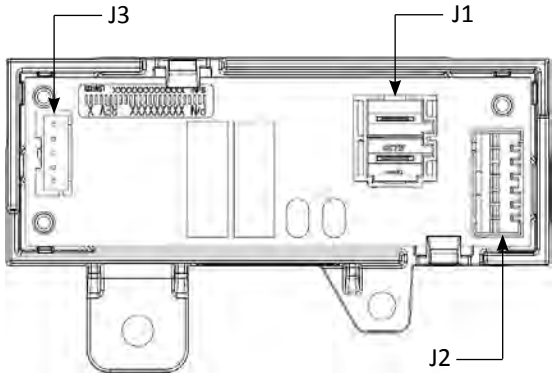

Connector	Component(s)
J1	L1 & Neutral
J2	Auxiliary Fan
J3	CCU

Removing the Front Panel & Door Switch

⚠ WARNING

Electrical Shock Hazard

Disconnect power before servicing.

Replace all parts and panels before operating.

Failure to do so can result in death or electrical shock.

To Remove the Front Panel & Door Switch

1. Unplug dryer or disconnect power.
2. Perform the procedures on page 4-4, “Removing the Top Panel” and “Removing the Console” prior to performing the following steps.
3. Disconnect Door Switch connector (see Figure 1).

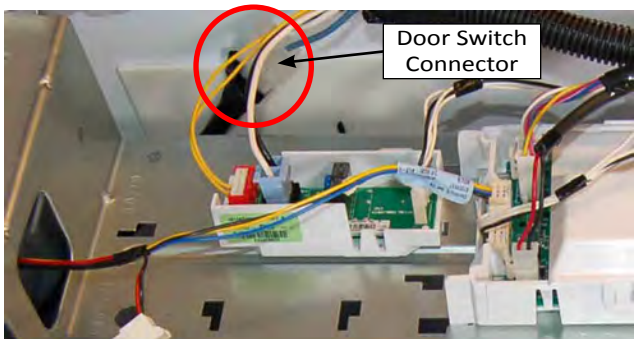

Figure 1

4. Open dryer door and pull the primary lint screen straight up and out. Next, remove the two Phillips screws. Close the door.
5. Open the secondary filter door at the bottom of the dryer. Grab the handle to pull out the secondary lint filter box (see Figure 2). Remove secondary filter door from front panel.

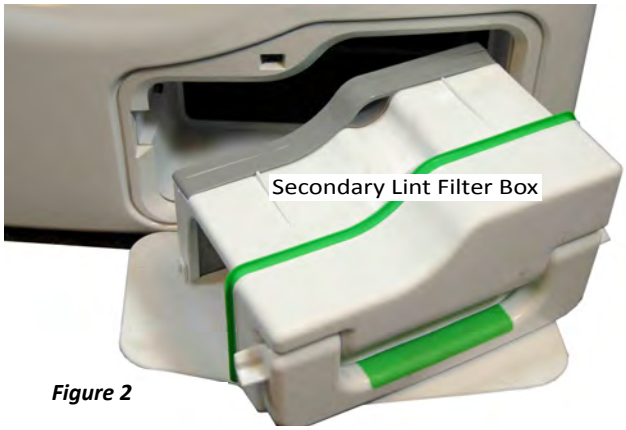

Figure 2

6. Remove four (4) 1/4” hex-head screws from the bottom of the front panel (see Figure 3).
7. Remove three (3) 1/4” hex-head screws from the top of the front panel (see Figure 3).

Figure 3

8. Lift the front panel assembly up off the tabs and away from the dryer.
9. Detach harness clip(s) from front panel. Depress the tabs on each side of the door switch and feed the switch assembly through the opening (see Figure 4).

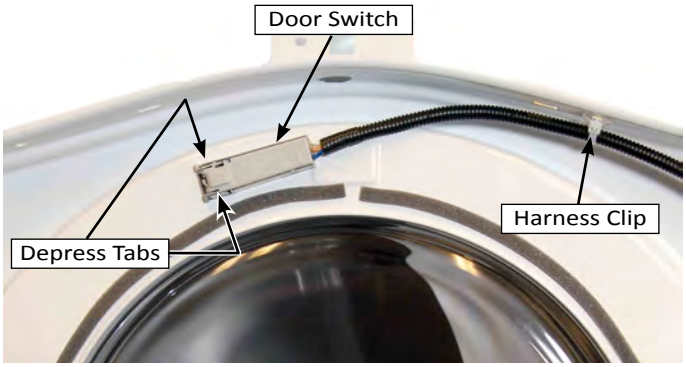

Figure 4

Removing the Moisture Sensor

⚠ WARNING

Electrical Shock Hazard

Disconnect power before servicing.

Replace all parts and panels before operating.

Failure to do so can result in death or electrical shock.

To Remove the Moisture Sensor

1. Unplug dryer or disconnect power.
2. Perform the procedures on page 4-4, “Removing the Top Panel” and “Removing the Console” prior to performing the following steps.
3. Perform the procedures on page 4-7, “Removing the Front Panel” prior to performing the following steps.
4. Disconnect Moisture Sensor connector (see Figure 1).

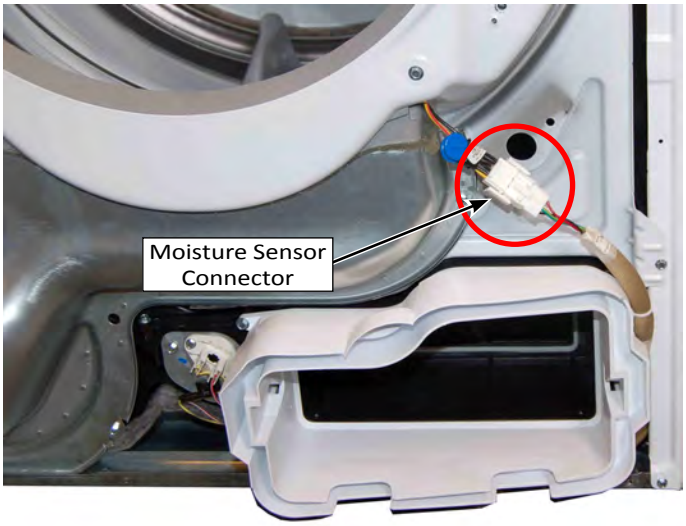

Figure 1

5. Remove two (2) 1/4” hex-head screws securing the Outlet Grill & Housing Assembly to the front bulkhead (see Figure 2).
6. Lift up the Outlet Grill & Housing Assembly from the bulkhead (see Figure 2).

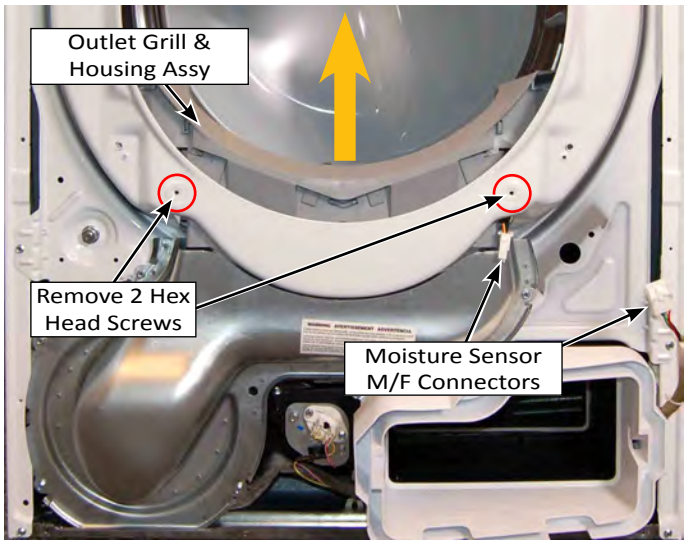

Figure 2

7. Separate the two halves of the Outlet Grill & Housing Assembly to access and remove the moisture sensor (see Figure 3).

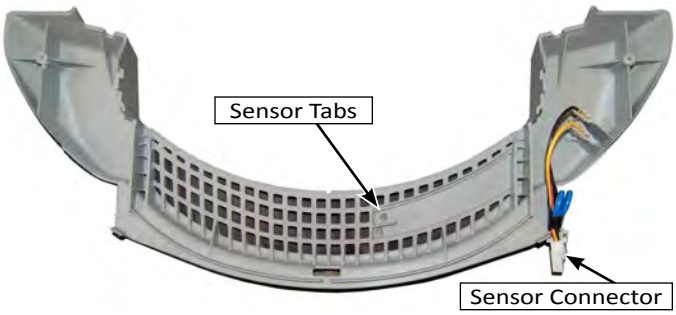

Figure 3

Removing the Drum Light & Outlet Thermistor

⚠ WARNING

Electrical Shock Hazard

Disconnect power before servicing.

Replace all parts and panels before operating.

Failure to do so can result in death or electrical shock.

⚠ WARNING

Electrical Shock Hazard

Disconnect power before servicing.

Replace all parts and panels before operating.

Failure to do so can result in death or electrical shock.

To Remove the Drum Light

1. Unplug dryer or disconnect power.
2. Perform the procedures on page 4-4, “Removing the Top Panel” and “Removing the Console” prior to performing the following steps.
3. Perform the procedures on page 4-7, “Removing the Front Panel” prior to performing the following steps.
4. Depress the tabs on both sides of the drum light to release from light from bulkhead. Push light and harness through hole (see Figures 1 and 2).

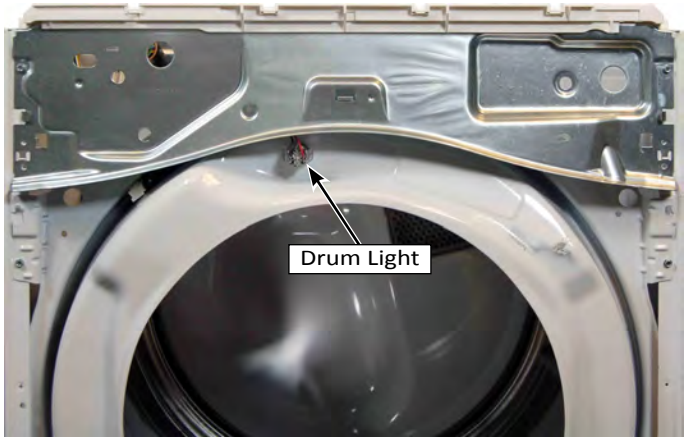

Figure 1

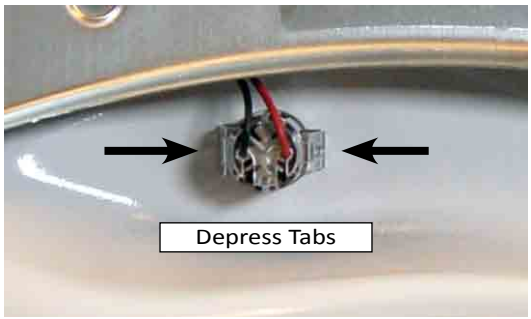

Figure 2

To Remove the Outlet Thermistor

1. Unplug dryer or disconnect power.
2. Perform the procedures on page 4-4, “Removing the Top Panel” and “Removing the Console” prior to performing the following steps.
3. Perform the procedures on page 4-7, “Removing the Front Panel” prior to performing the following steps.
4. Disconnect the two wire connectors from the outlet thermistor terminals (red-white and yellow). See Figure 3 below.
5. Remove the screws from the outlet thermistor as illustrated in Figure 3 and remove the component from the blower housing.

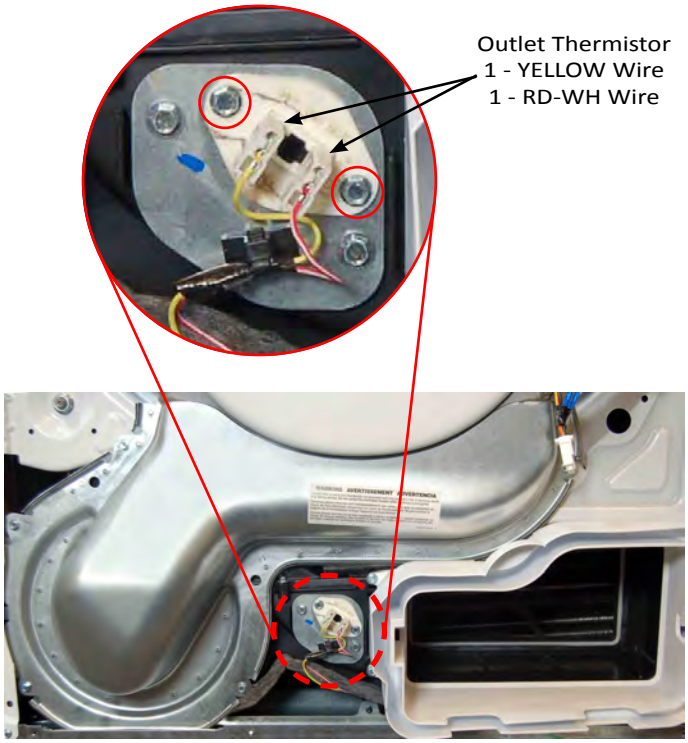

Figure 3

Removing the Belt, Drum, and Rollers

⚠ WARNING

Electrical Shock Hazard

Disconnect power before servicing.

Replace all parts and panels before operating.

Failure to do so can result in death or electrical shock.

To Remove the Belt and Drum

1. Unplug dryer or disconnect power.
2. Remove drain hose from standpipe or laundry tub.
3. Perform the procedures on page 4-4, “Removing the Top Panel” and “Removing the Console” prior to performing the following steps.
4. Perform the procedures on page 4-7, “Removing the Front Panel” prior to performing the following steps.
5. Remove front 1/4” hex-head screw securing the control bracket to the console bracket...or remove the entire control bracket (see Figure 1).

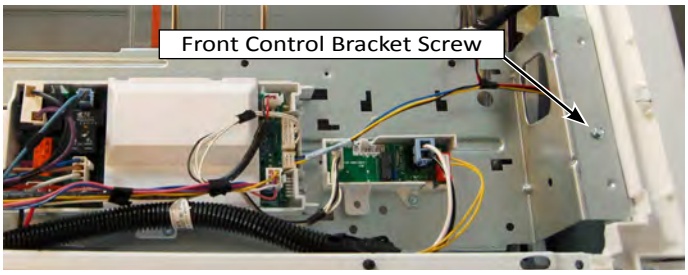

Figure 1

6. Remove the four (4) 1/4” hex-head screws from the console bracket and remove (see Figure 2).

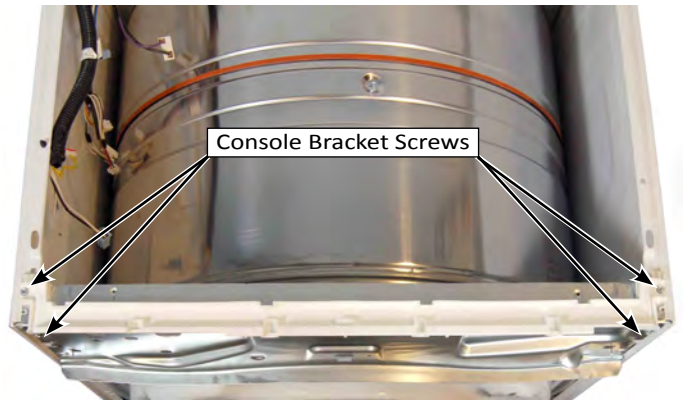

Figure 2

7. Disconnect Moisture Sensor connector (see Figure 3).

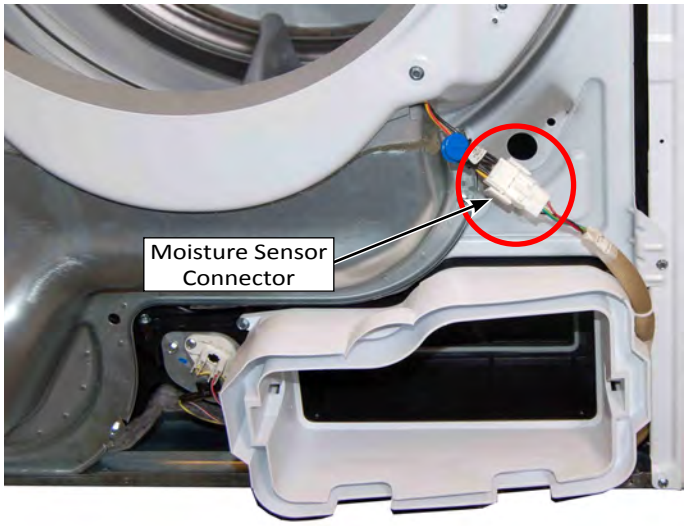

Figure 3

8. Remove two (2) 1/4” hex-head screws securing the Outlet Grill & Housing Assembly to the front bulkhead (see Figure 4).

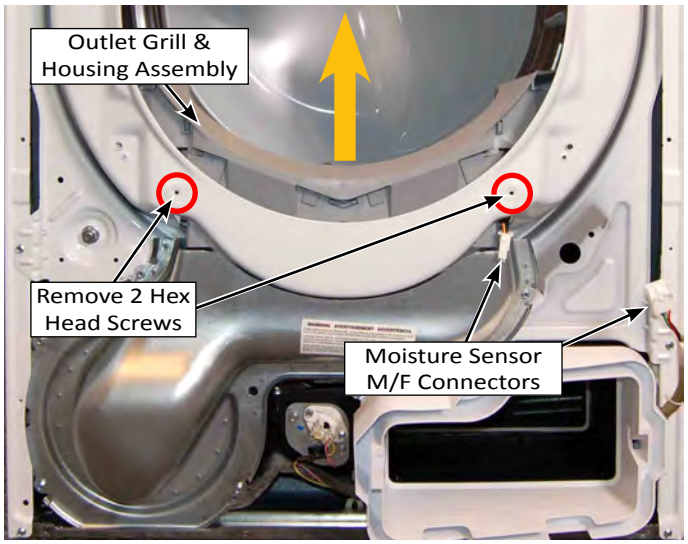

Figure 4

9. Remove the four (4) 1/4” hex-head screws from the secondary lint assembly bezel and remove (see Figure 5).

Figure 5

Removing the Belt, Drum, and Rollers (continued)

10. Remove the five (5) 1/4” hex-head screws from the lint duct as illustrated in Figure 6. Swivel the lint duct down from the bulkhead and remove.

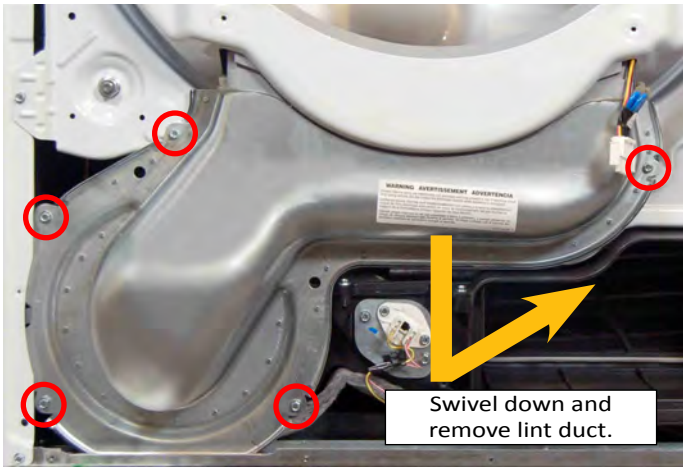

Figure 6

11. Remove the four (4) 1/4” hex-head screws securing the front bulkhead to the side panels as illustrated in Figure 7. Lift the bulkhead up off the side-panel tabs and remove.

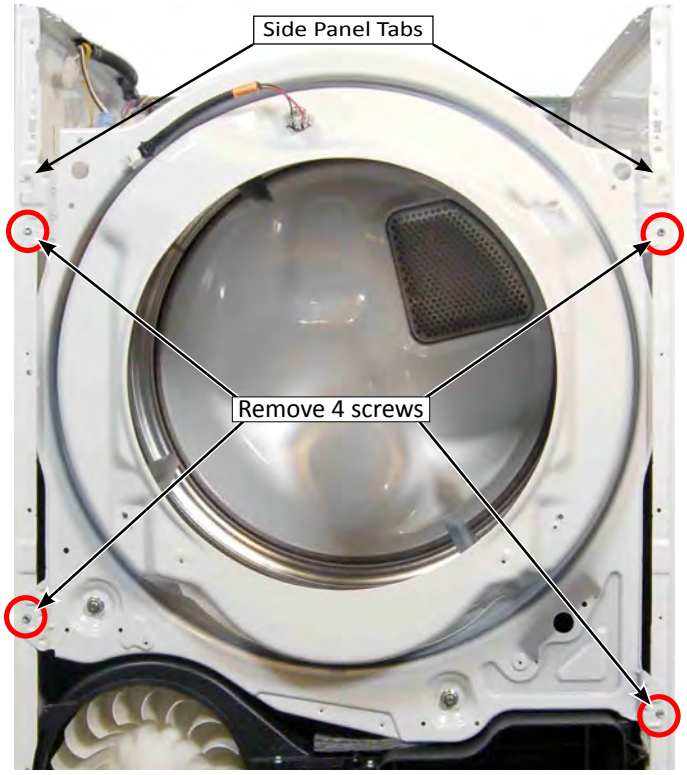

Figure 7

12. Reach under the drum, (raise it as far as it will go), and push the idler pulley arm, on the back of the drive motor, to the left to relieve the tension on the belt, then remove the belt from the pulley. See Figure 8.

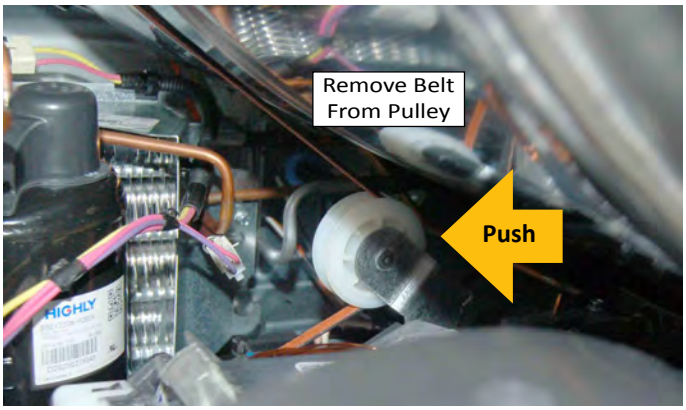

Figure 8

13. Slide the belt off the front of the drum and remove belt.

14. Lift the drum and remove it from the dryer cabinet.

To Remove a Roller

1. Pry the sides of the triangular ring out of the groove in the roller shaft with a small screwdriver (see Figure 9).

Figure 9

2. Slide the roller off the roller shaft (see Figure 10).

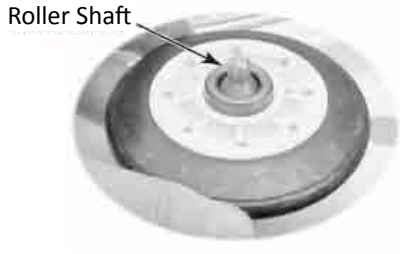

Figure 10

3. To remove the roller shaft, remove the 9/16” nut and washer from the roller support, and remove the support and remaining triangular ring. See Figure 11.

Figure 11

Removing the Drive Motor

⚠ WARNING

Electrical Shock Hazard

Disconnect power before servicing.

Replace all parts and panels before operating.

Failure to do so can result in death or electrical shock.

To Remove the Drive Motor

1. Unplug dryer or disconnect power.
2. Remove drain hose from standpipe or laundry tub.
3. Perform the procedures on page 4-4, “Removing the Top Panel” and “Removing the Console” prior to performing the following steps.
4. Perform the procedures on page 4-7, “Removing the Front Panel” prior to performing the following steps.
5. Perform the procedures on page 4-10, “Removing the Belt and Drum” prior to performing the following steps.
6. Reach around to the back of the blower housing and attached a 7/16” open-end wrench to the hex-end of the motor shaft, and a ratchet with a 5/8” socket over the hex-head nut on the blower wheel (see Figure 1).
7. Turn the blower wheel clockwise (shown by the “REMOVE” arrow that is embossed on the front of the wheel) and remove the wheel from the motor shaft (see Figure 1).

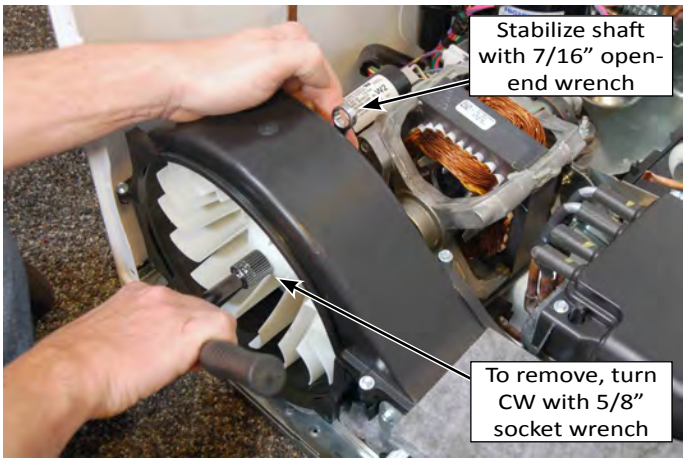

Figure 1

8. Lift the locking tabs on the top and bottom of the motor harness plug and disconnect the plug from the motor terminals.

9. Locate the front and rear motor clips as illustrated in Figure 2 below. Using a small flat blade screwdriver, insert the blade of the screwdriver into the pocket at the tip of the clip. Pry the clips off the tab and remove.

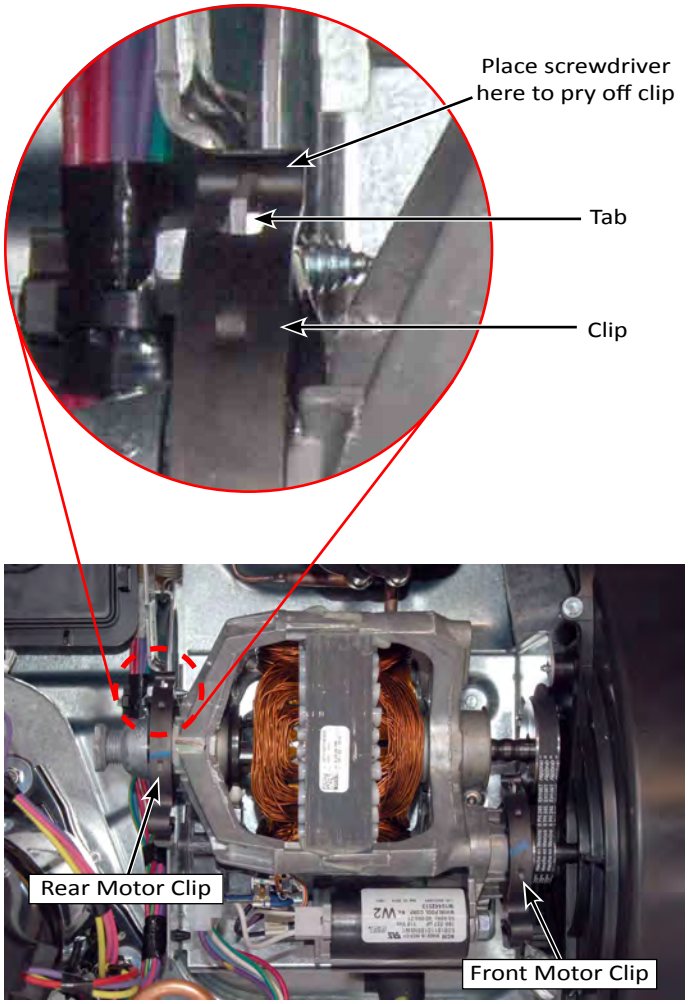

Figure 2

10. Lift motor from support brackets, slide shaft from blower wheel housing and remove motor from cabinet.

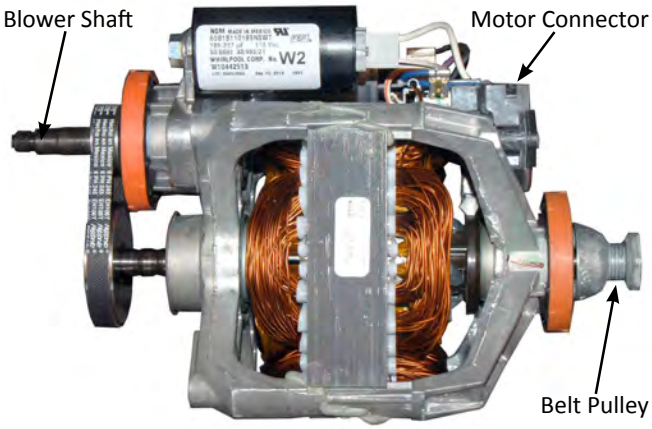

Figure 3

Removing the Drain Pump & Float Assembly

⚠ WARNING

Electrical Shock Hazard

Disconnect power before servicing.

Replace all parts and panels before operating.

Failure to do so can result in death or electrical shock.

To Remove the Drain Pump and Float Assembly

IMPORTANT: The Drain Pump and Float Switch are replaced together as part of the Sump Cover assembly.

1. Unplug dryer or disconnect power.
2. Remove drain hose from standpipe or laundry tub.
3. Perform the procedures on page 4-4, “Removing the Top Panel” and “Removing the Console” prior to performing the following steps.
4. Perform the procedures on page 4-7, “Removing the Front Panel” prior to performing the following steps.
5. Perform the procedures on page 4-10, “Removing the Belt and Drum” prior to performing the following steps.
6. Disconnect the Drain Pump harness (see Figure 1 below).
7. Disconnect the Float Switch harness (see Figure 1 below).
8. Remove the drain hose from the sump cover.
9. Remove the two (2) 1/4” hex-head screws securing the cover to the sump assembly (as illustrated in Figure 1). Remove the cover assembly, containing the pump and float from the base of the dryer.

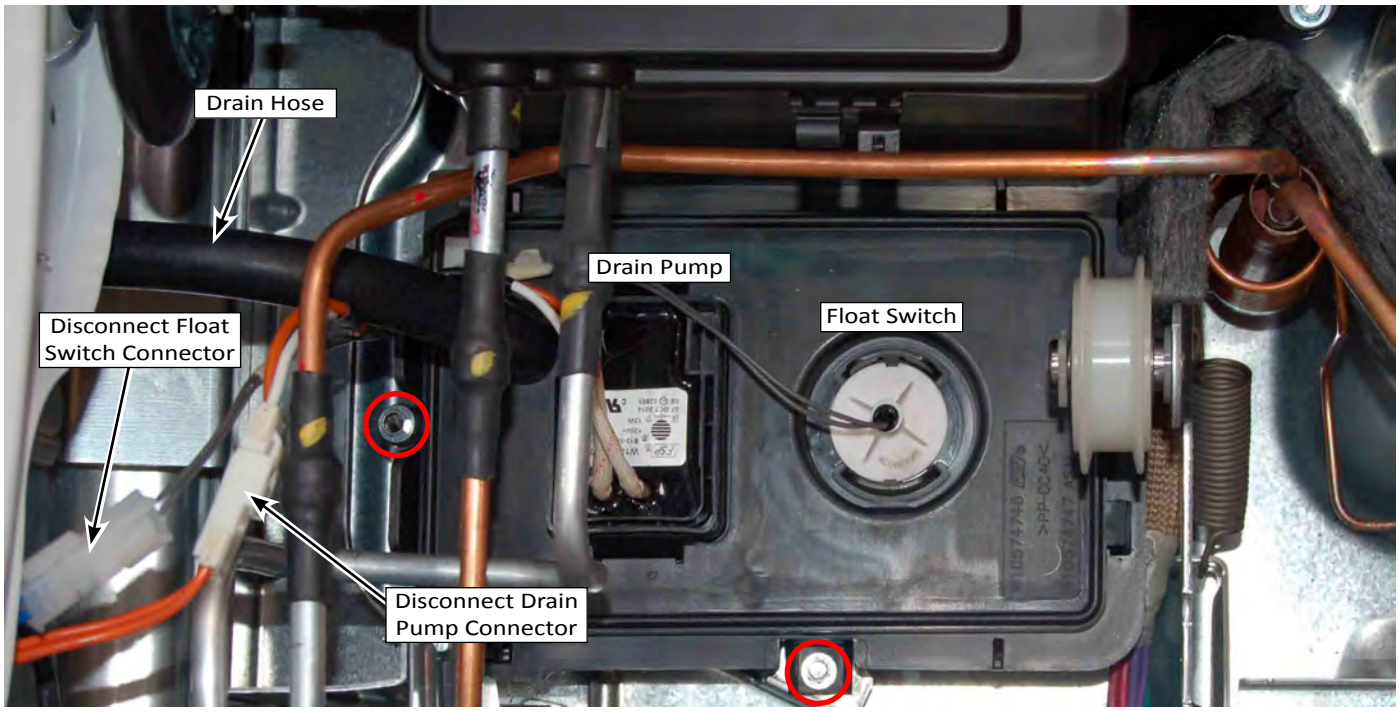

Figure 1

Removing the Reed Lint Switch

⚠ WARNING

Electrical Shock Hazard

Disconnect power before servicing.

Replace all parts and panels before operating.

Failure to do so can result in death or electrical shock.

To Remove the Reed Lint Switch

NOTE: The Reed Lint Switch is "heat staked" to the heat exchanger cover. To replace the reed lint switch, the entire cover must be replaced.

1. Unplug dryer or disconnect power.
2. Remove drain hose from standpipe or laundry tub.
3. Perform the procedures on page 4-4, "Removing the Top Panel" and "Removing the Console" prior to performing the following steps.
4. Perform the procedures on page 4-7, "Removing the Front Panel" prior to performing the following steps.
5. Perform the procedures on page 4-10, "Removing the Belt and Drum" prior to performing the following steps.
6. Perform Step 7 on page 4-12, to remove the blower prior to performing the following steps.
7. Disconnect the reed lint switch connector (see Figure 1 below).
8. Remove the one 1/4" hex-head screw located behind the blower wheel (see Figure 2 at right).
9. Remove the sixteen (16) 1/4" hex-head screws securing the cover to the heat exchanger assembly (as illustrated in Figure 3). Remove the cover assembly, containing the reed lint switch.

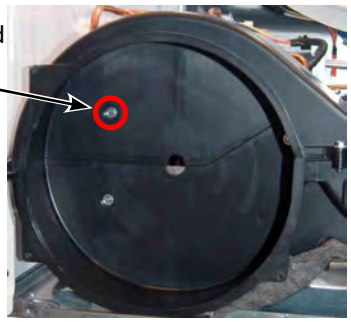

Figure 2

IMPORTANT: See cover reassembly notes on page 4-19.

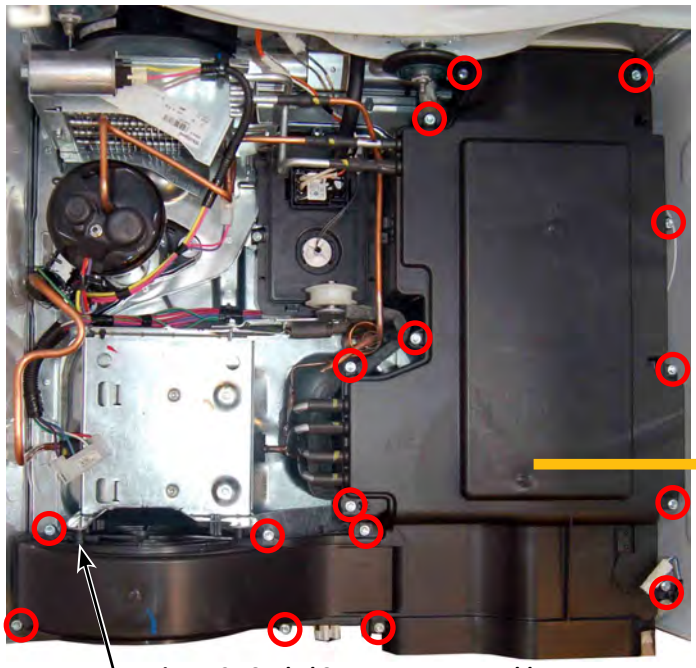

Figure 3 - Sealed System Base Assembly

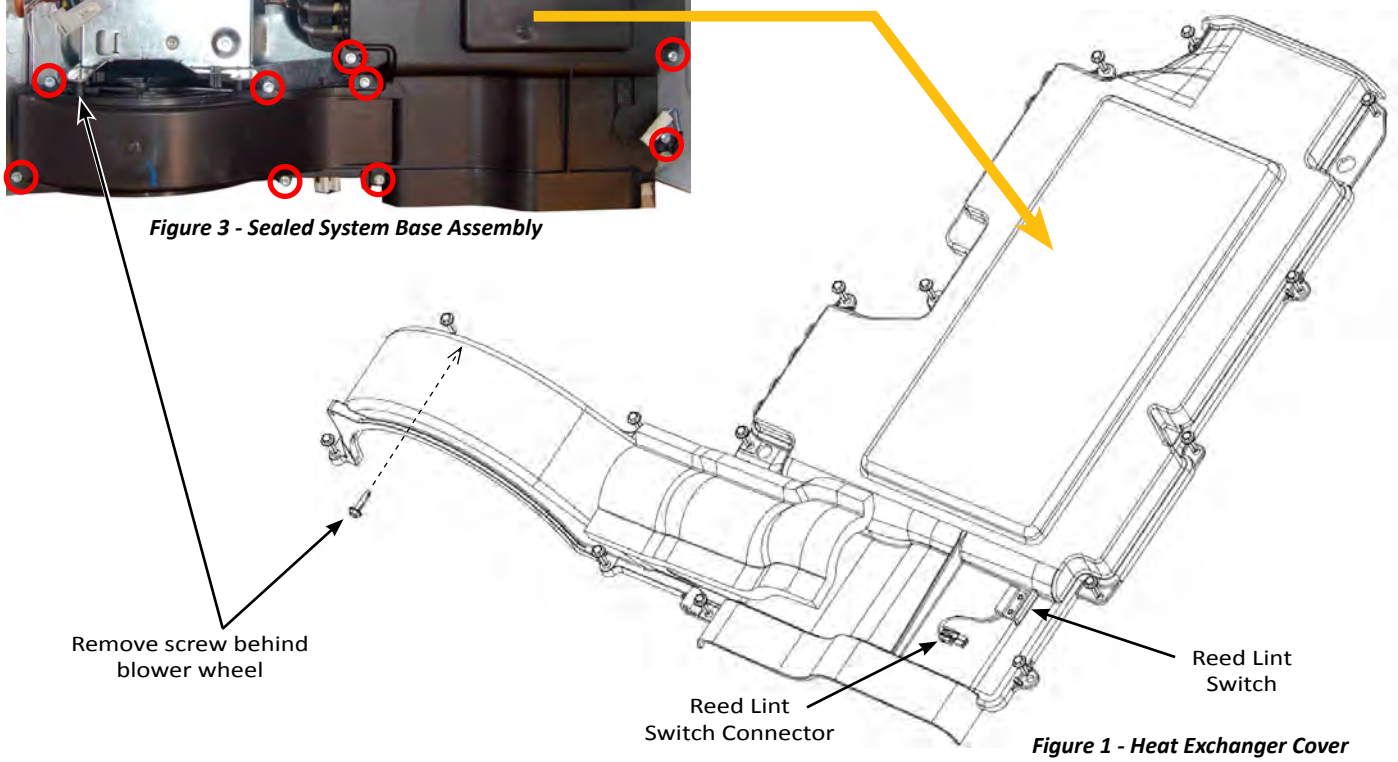

Figure 1 - Heat Exchanger Cover

Removing the Rear Panel

⚠ WARNING

Electrical Shock Hazard

Disconnect power before servicing.

Replace all parts and panels before operating.

Failure to do so can result in death or electrical shock.

To Remove the Rear Panel

1. Unplug dryer or disconnect power.
2. Remove drain hose from standpipe or laundry tub.
3. Remove the 5/16” hex-head screw securing the terminal block cover to the rear panel. Remove the cover (see Figure 1).

Figure 1

4. Remove the 1/4” hex-head screw securing the auxiliary fan guard to the rear panel. Remove the fan guard (see Figure 2).

Figure 2

5. Remove the fifteen (15) 1/4” hex-head screws securing the rear panel to the dryer (see Figure 3).

Figure 3

6. Lift up rear panel up and away from dryer base and set aside.

Removing the Heater

⚠ WARNING

Electrical Shock Hazard

Disconnect power before servicing.

Replace all parts and panels before operating.

Failure to do so can result in death or electrical shock.

To Remove the Heater

1. Unplug dryer or disconnect power.
2. Remove drain hose from standpipe or laundry tub.
3. Perform the procedures on page 4-15, “Removing the Rear Panel” prior to performing the following steps.

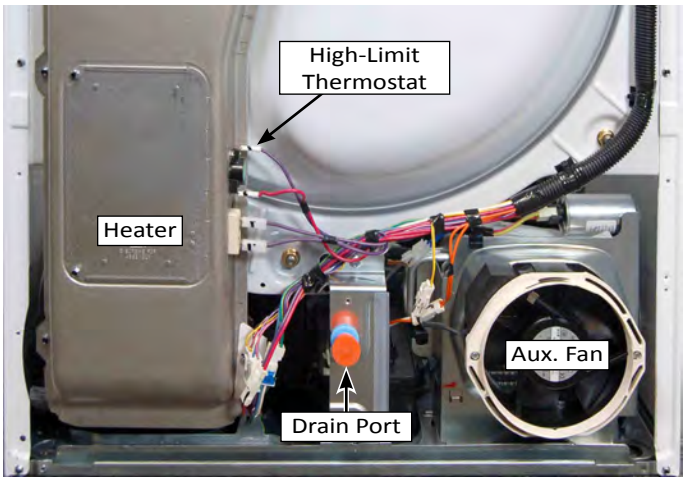

Figure 1

4. Disconnect the two heater terminals from the side of the inlet duct.

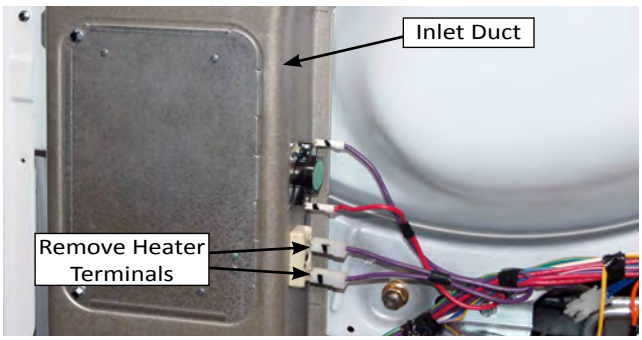

Figure 2

5. Remove the 1/4” hex-head screw securing the heater connector to the inlet duct (see Figure 3).

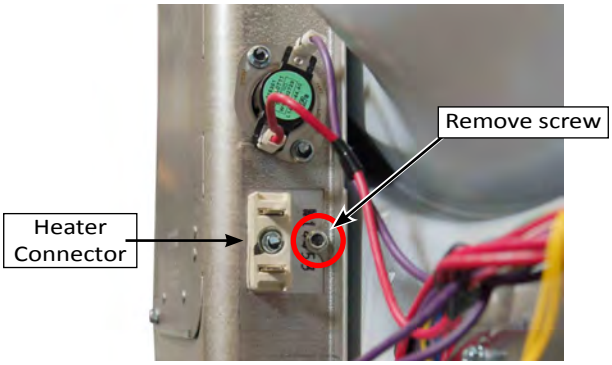

Figure 3

6. Remove the two (2) 1/4” hex-head screws securing the heater assembly to the inlet duct (see Figure 4). Remove heater assembly from dryer.

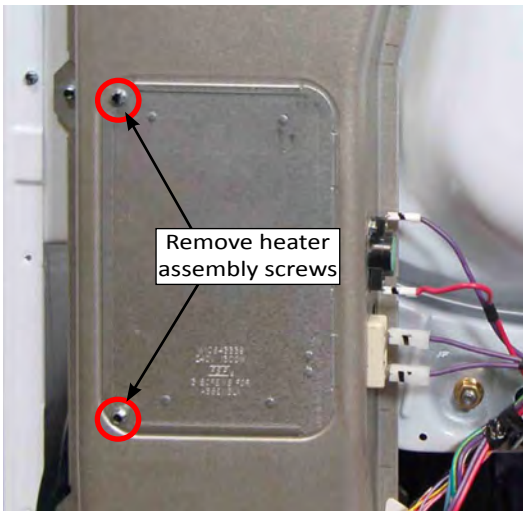

Figure 4

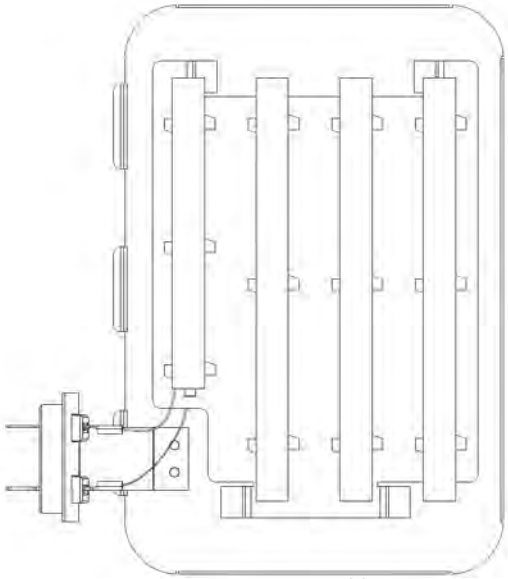

Figure 5 - Heater Assembly

Removing the High Limit and Auxiliary Fan

⚠ WARNING

Electrical Shock Hazard

Disconnect power before servicing.

Replace all parts and panels before operating.

Failure to do so can result in death or electrical shock.

⚠ WARNING

Electrical Shock Hazard

Disconnect power before servicing.

Replace all parts and panels before operating.

Failure to do so can result in death or electrical shock.

To Remove the High Limit Thermostat

1. Unplug dryer or disconnect power.
2. Remove drain hose from standpipe or laundry tub.
3. Perform the procedures on page 4-15, “Removing the Rear Panel” prior to performing the following steps.

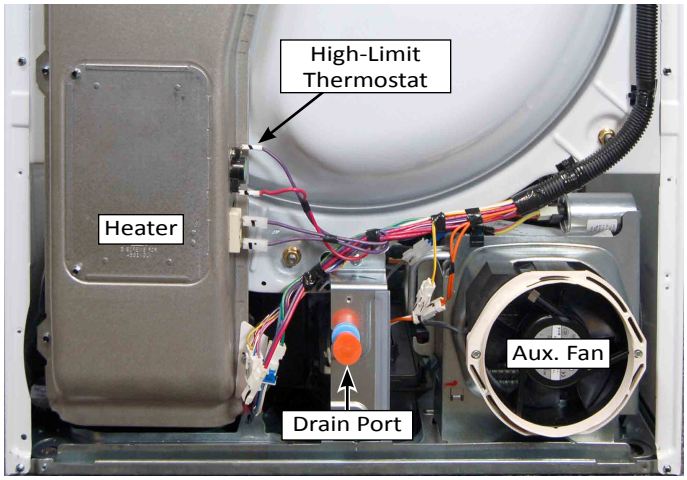

Figure 1

4. Disconnect the two terminal wires from the high limit thermistor (see Figure 2).
5. Remove the two (2) 1/4” hex-head screws securing the thermistor to the inlet duct (see Figure 2).

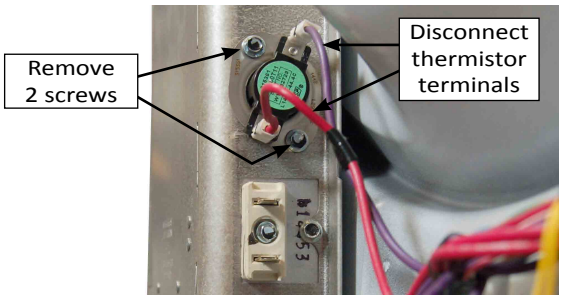

Figure 2

To Remove the Auxiliary Fan

1. Unplug dryer or disconnect power.
2. Remove drain hose from standpipe or laundry tub.
3. Perform the procedures on page 4-15, “Removing the Rear Panel” prior to performing the following steps.

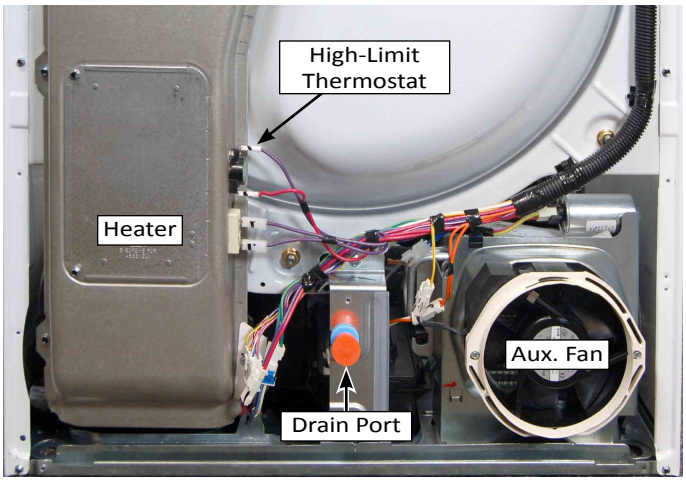

Figure 3

4. Disconnect the fan connector (yellow wires) as illustrated in Figure 4.
5. Remove the two (2) 1/4” hex-head screws securing the fan to the fan bracket (see Figure 4). Remove the fan assembly.

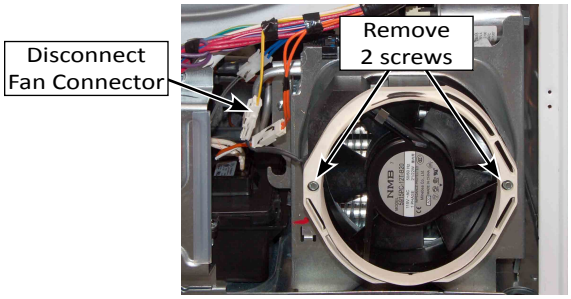

Figure 2

Removing the Heat Pump (Base Assembly)

⚠ WARNING

Electrical Shock Hazard

Disconnect power before servicing.

Replace all parts and panels before operating.

Failure to do so can result in death or electrical shock.

To Remove the Heat Pump (Base Assembly)

1. Unplug dryer or disconnect power.
2. Remove drain hose from standpipe or laundry tub.
3. Perform the procedures on page 4-4, “Removing the Top Panel” and “Removing the Console” prior to performing the following steps.
4. Disconnect the harnesses from the CCU and REX control boards (Refer to page 4-6). Remove two (2) 1/4” hex-head screws securing the control bracket to the dryer. Remove the bracket and control boards.
5. Perform the procedures on page 4-7, “Removing the Front Panel” prior to performing the following steps.
6. Perform the procedures on page 4-10, “Removing the Belt and Drum” prior to performing the following steps.
7. Perform the procedures on page 4-15, “Removing the Rear Panel” prior to performing the following steps.
8. Disconnect all the harness connections to the base assembly as illustrated in Figure 1, except for the heater and high limit thermostat.

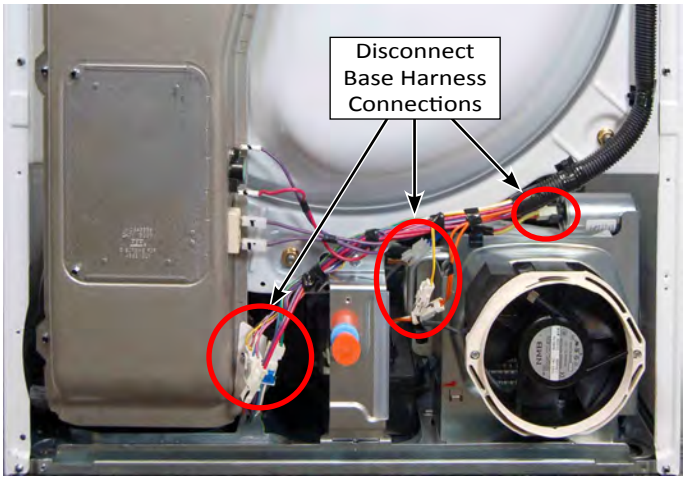

Figure 1

9. Unclip the two (2) upper harness clips that are located on the top-edge of the left side panel (see Figure 2).

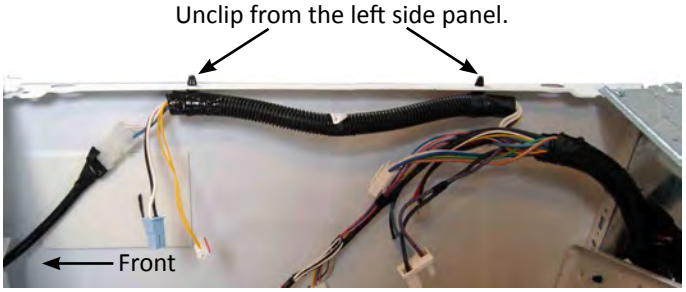

Figure 2

10. Remove the two (2) 1/4” hex-head screws securing the rear/terminal bracket to the dryer (see Figure 3). For now, allow bracket to hang.

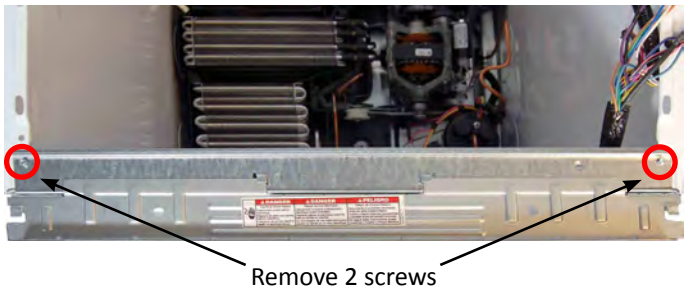

Figure 3

11. Remove the two (2) lower 1/4” hex-head screws at the bottom of the inlet duct as illustrated in Figure 4.
12. Remove one 1/4” hex-head screw located behind the lower harness as illustrated in Figure 4.
13. Unclip the single harness clip from the drain bracket (see Figure 4).

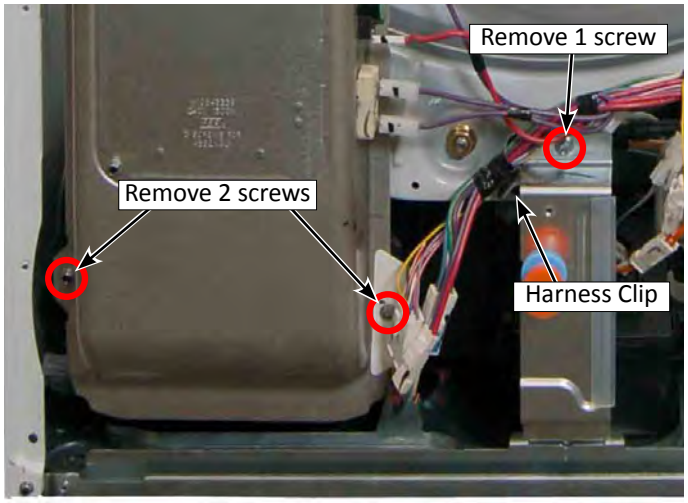

Figure 4

Removing the Heat Pump (Base Assembly) continued

14. Remove the bottom two (2) 1/4” hex-head screws from the rear bulkhead. Loosen the top two (2) 1/4” hex-head screws at the keyhole slots. See Figure 5.
15. Lift the rear bulkhead assembly (unhooking top screws from keyhole slots) and remove assembly from dryer with attached inlet duct, rear-terminal bracket, and upper harness.
16. Remove the two (2) 1/4” hex-head screws securing the front and rear lower right side panel to the base assembly. Lift up on the right side of the base assembly to disengage the right side panel and remove. See Figure 5.
17. Remove the two (2) 1/4” hex-head screws securing the front and rear lower left side panel to the base assembly. Lift up on the left side of the base assembly to disengage the left side panel and remove. See Figure 5.

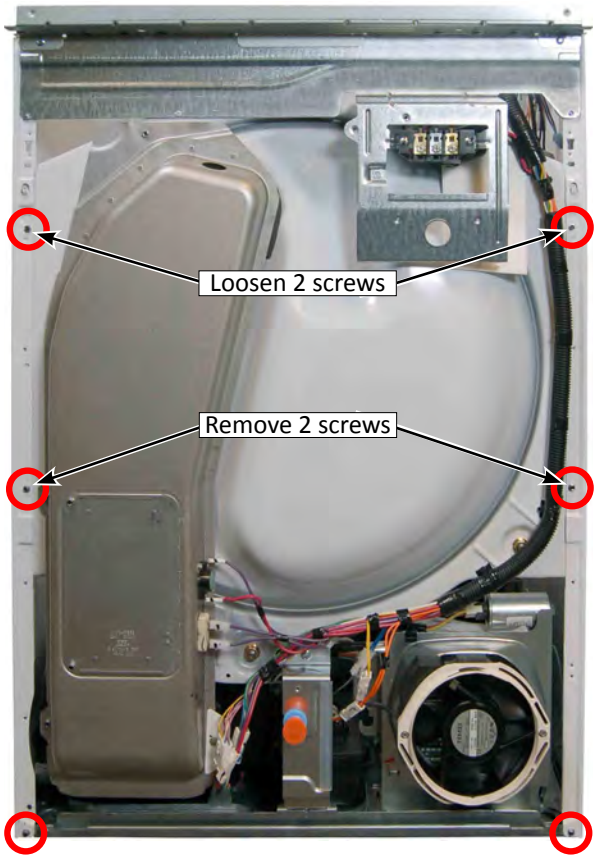

Remove both front and rear screws

Remove both front and rear screws

Figure 5

Base Assembly Replacement

NOTE: The following components must be transferred from the original product base to the new service replacement base:

- Dryer Motor Assembly/Capacitors
- Dryer Motor Bracket/Idler Pulley Assembly
- Auxiliary Fan
- Blower Wheel
- Sump Cover Assembly
- Drain Hose & Bracket Assembly
- Secondary Lint Filter
- Inlet Thermistor
- Compressor Capacitor

REASSEMBLY NOTE: Inspect the seal strip at the back of the heat exchanger for damage. Check for correct installation and placement along the edge of the heat exchanger outlet. Ensure seal between heat exchanger and bulkhead.

REASSEMBLY NOTE: When reinstalling the cover onto the heat exchanger, ensure that the evaporator and condenser tube sleeves are properly installed around the tubes between the cover and housing of the heat exchanger.

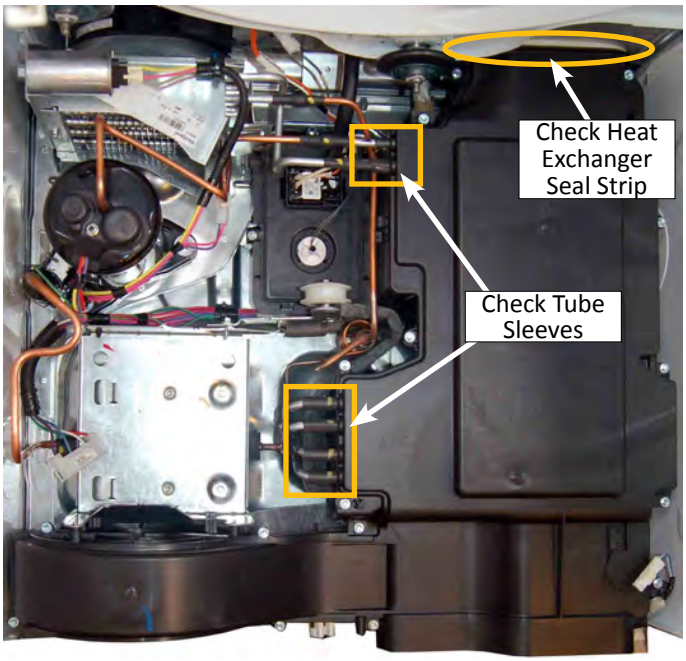

Figure 6 - Heat Pump Base Assembly

Notes

Section 5: Diagnostics & Troubleshooting

This section provides diagnostic, fault codes, and troubleshooting information for the “HybridCare™ Dryer with Heat Pump Technology.”

- Whirlpool Control Panel
- Diagnostic Guide
- Self Diagnostic Mode
- Activating Service Diagnostic Mode
- User Interface Test
- Loads Test
- Install Diagnostics
- Software Version Display
- Fault/Error Codes
- Exiting Service Diagnostic Mode
- Customer Fault/Error Codes Chart
- Service Fault/Error Codes Chart
- Troubleshooting Guide

For Service Technician Use Only

Whirlpool Control Panel
(features and appearances may vary between models)

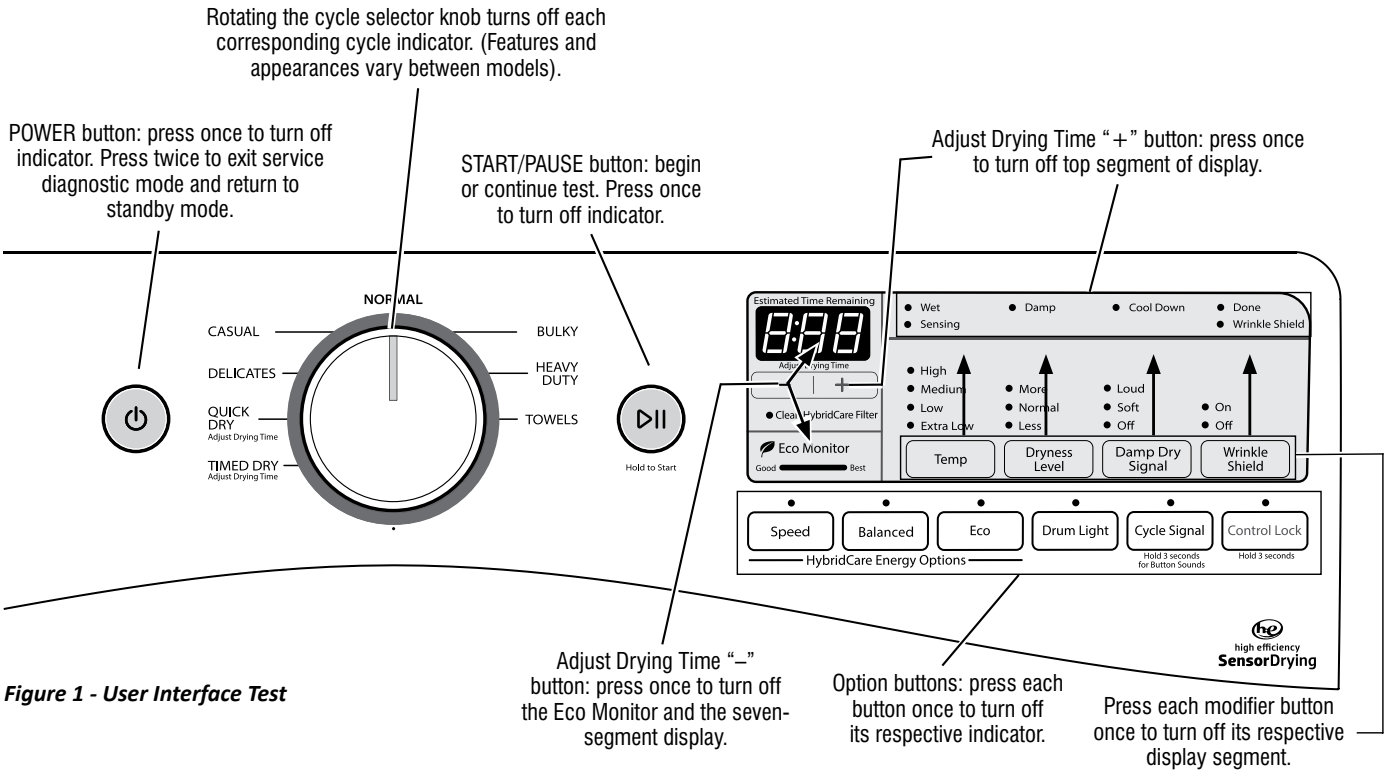

Figure 1 - User Interface Test

Diagnostic Guide

Before servicing, check the following:

- Make sure there is power at the wall outlet.
- Has a household fuse blown or circuit breaker tripped? Was a regular fuse used? Inform customer that a time-delay fuse is required.
- Make sure the dryer fan, lint screen, and secondary lint filter are clear of lint and obstructions.
- All tests/checks should be made with a VOM (volt-ohm-milliammeter) or DVM (digital-voltmeter) having a sensitivity of 20,000 Ω per volt DC or greater.
- Resistance checks must be made with dryer unplugged or power disconnected.
- **IMPORTANT**: Avoid using large diameter probes when checking harness connectors as the probes may damage the connectors upon insertion.
- Check all harnesses and connections before replacing components. Look for connectors not fully seated, broken or loose wires and terminals, pin insertion, or wires not pressed into connectors far enough to engage metal barbs.
- A potential cause of a control not functioning is corrosion or contamination on connections. Use an ohmmeter to check for continuity across suspected connections.

Service Diagnostic Mode

These tests allow service personnel to test and verify all inputs to the machine control electronics. You may want to do a quick and overall checkup of the dryer with these tests before going to specific troubleshooting tests.

Activating Service Diagnostic Mode

1. Be sure the dryer is in standby mode (plugged in with all indicators off).
2. Select any three (3) buttons (except POWER) and follow the steps below, using the same buttons (remember the buttons and the order that the buttons were pressed):

   Within 8 seconds,

   - Press and Release the 1st selected button,
   - Press and Release the 2nd selected button,
   - Press and Release the 3rd selected button;
   - Repeat this 3 button sequence 2 more times.
3. If this test mode has been entered successfully, all indicators on the console are illuminated for 5 seconds with "888" showing in the Estimated Time Remaining three-digit display. If there are no saved fault codes, all indicators on the console will momentarily turn off, and then only the seven segment display will come back on and display "888".

   NOTE: The Service Diagnostic mode will time out after 10 minutes of user inactivity, or shut down if AC power is removed from the dryer.

SERVICE DIAGNOSTIC MENU TABLE

	Button Press	Function Behavior
1st Button	- Momentary press - Press and hold for 5 secs.	- Activates User Interface Test - Exits Service Diagnostics
2nd Button	- Momentary press - Press and hold for 5 secs.	- Activates Install Diagnostics - Software Version Display
3rd Button	- Momentary press - Press and hold for 5 secs.	- Displays Next Error Code - Clears the Error Codes

For Service Technician Use Only

Unsuccessful Activation

If entry into diagnostic mode is unsuccessful, refer to the following indications and actions:

Indication 1: None of the indicators or display turn on.

Action: Select any cycle.

- ➢ If indicators come on, try to change the function for the three buttons used to activate the diagnostic test mode. If any button is unable to change the function, something is faulty with the button, and it will not be possible to enter the diagnostic mode using that button. Replace the user interface and housing assembly.
- ➢ If no indicators come on after selecting the cycle, go to TEST #1, CCU Power Check, page 6-4.

Indication 2: Console indicators begin flashing immediately.

Action: If console indicators begin flashing on and off immediately, replace the user interface.

Activation with Saved Fault Codes

If there is a saved fault code, it will be flashing in the display. Review the Fault/Error Codes table on page 5-6 for the recommended procedure. If there is no saved fault code, “888” will be displayed.

USER INTERFACE TEST

NOTE: The Service Diagnostic mode must be activated before entering the User Interface Test; see procedure on page 5-2.

Active Fault Code Display in User Interface Test

If the display begins flashing while in User Interface Test, it is displaying an active fault code. Active fault codes are codes that are currently detected. Only one active fault code can be displayed at a time.

Entry Procedure

Press and release the **1st** button used to activate Service Diagnostic mode.

The following test will be available:

DIAGNOSTIC: Console Buttons and Indicators

Pressing each button will turn off its corresponding indicator(s) or display segment and sound a beep as shown in figure 1, page 5-2.

Rotating the cycle selector knob turns off each corresponding cycle indicator.

NOTE: A second press of the **POWER** button while in Console Buttons and Indicators mode exits the Service Diagnostic mode and returns the dryer to standby mode.

- ➢ If indicators do not turn off and beep after pressing buttons and rotating the cycle selector knob, go to TEST #6: Buttons and Indicators, page 6-17.

Exit Procedure

To exit User Interface Test, press the POWER button once or twice (depending on diagnostic procedure).

LOADS TEST

ACTIVATING LOADS TEST MODE

NOTE: Entering into Loads Test mode may automatically reset some codes that may have been set, and that information could be erased. Before activating the Loads Test mode, be sure to check for Saved Fault Codes using the Service Diagnostics mode; see procedure on page 5-2.

1. Be sure the dryer is in standby mode (plugged in with all indicators off).
2. **Within 5 seconds, do the following in sequence:**
   - Press and Release the “+” button,
   - Press and Release the “–” button,
   - Repeat the above sequence one more time. (Example: “+” ... “–” ... “+” ... “–”)
3. If this test mode has been entered successfully, all indicators on the console will be illuminated with “888” showing in the Estimated Time Remaining three-digit display.

NOTE: The Loads Test mode will time out after 10 minutes of user inactivity, or shut down if AC power is removed from the dryer.

Unsuccessful Activation

If entry into Loads Test mode is unsuccessful, refer to the following indications and actions:

Indication 1: None of the indicators or display turn on.

Action: Select any cycle.

- ➢ If indicators come on, select one of the “Timed Cycles” (for example, “Timed Dry”). If either the “+” button or “–” button is unable to change the time indication in the Estimated Time Remaining three-digit display, something is faulty with the button, and it will not be possible to enter the Loads Test mode. Replace the user interface and housing assembly. If the “+” and “–” buttons both work, press the POWER button to turn off the dryer and retry to activate Loads Test mode from step 1 above.
- ➢ If no indicators come on after selecting the cycle, go to TEST #1, CCU Power Check, page 6-4.

Indication 2: Console indicators begin flashing immediately.

Action: If console indicators begin flashing on and off immediately, replace the user interface.

Activation with Saved Fault Codes

If there is a saved fault code, it will be flashing in the display. Review the Fault/Error Codes table on page 5-6 for the recommended procedure. If there is no saved fault code, “**888**” will be displayed.

NOTE: Entering into Loads Test mode may automatically reset some codes that may have been set, and that information could be erased. Before activating the Loads Test mode, be sure to check for Saved Fault Codes using the Service Diagnostics mode; see procedure on page 5-2.

1. DIAGNOSTIC: Console Buttons and Indicators

Pressing each button will turn off its corresponding indicator(s) or display segment and sound a beep as shown in figure 1, page 5-2.

Rotating the cycle selector knob turns off each corresponding cycle indicator.

NOTE: A second press of the **POWER** button exits the mode and returns the dryer to standby mode.

- ➢ If indicators do not turn off and beep after pressing buttons and rotating the cycle selector knob, go to TEST #6: Buttons and Indicators, page 6-17.

For Service Technician Use Only

2. DIAGNOSTIC: Console ID, Motor, and Heater

Make sure the door is closed, and then press the **START** button. The dryer will beep and the motor and heater will turn on. The console ID will be displayed on the LED ("**099**"). Opening the door stops the motor and heater.

- If the Console ID is not displayed, replace the user interface and housing assembly.
- If the motor does not turn on, go to TEST #3: Motor Circuit, page 6-8.
- If no heat is detected, go to TEST #4: Heat System, page 6-10.

3. DIAGNOSTIC: Door Switch/Drum LED

Opening the door should display "**EEE**" and turn on the drum light. Closing the door should turn off the drum light.

- If opening the door does not cause "**EEE**" to be displayed, go to TEST #7: Door Switch, page 6-18.
- If opening the door does not turn on the drum light, go to TEST #8: Drum LED, page 6-19.

4. DIAGNOSTIC: Moisture Sensor

Open the door and locate two metal strips on the face of the lint screen housing. Bridge these strips with a wet cloth or a finger.

- If a repeating beep is heard and an alphanumeric number is displayed on the console, the sensor is good.
- If not, or if a repeating beep tone is heard before bridging the moisture strips, go to TEST #5: Moisture Sensor, page 6-15.

Exit Procedure

To exit Loads Test, press the POWER button once or twice (depending on diagnostic procedure).

INSTALL DIAGNOSTICS

NOTE: The Service Diagnostic mode must be activated before entering Install Diagnostics; see procedure on page 5-2.

NOTE: If, at any point, the user presses the **POWER** button or opens the door during Install Diagnostics, the dryer exits to standby mode.

NOTE: Door must be closed to perform test. Dryer must be cool before test to run correctly.

Active Fault Code Display in Install Diagnostics

If the display begins flashing while in Install Diagnostics, it is displaying an active fault code. Active fault codes are codes that are currently detected. Only one active fault code can be displayed at a time.

Entry Procedure

To enter Install Diagnostics, press and release the **2nd** button used to activate the Service Diagnostic mode. All LEDs turn off and the START button begins to flash.

PERFORM ALL TESTS: Press and release the **START** button to run ALL tests indicated in the chart below.

Exit Procedure

When test is complete, press the **POWER** button to exit Install Diagnostics and return to standby mode.

INSTALL DIAGNOSTICS					
STEP	**TEST**	**TEST**	**DRYER FUNCTION**	**COMPONENT**	**NOTES**
1		L1 L2 & L1 to L2	Dryer starts L2 detection algorithm	Motor On	Display shows "----" until voltage is available at UI.
2			L2 detection complete.	Motor On	Displays L2 level (range 0 to 200)
3	AIRFLOW		Dryer starts L1 detection algorithm. Airflow detection starts at this step.	Motor On Heater On	L2 continues to be displayed.
4			L1 detection complete. CCU calculates L1 to L2.	Motor On Heater On/Off	Once L1 is calculated, L1 to L2 is immediately calculated in the CCU.
5			Press the START button to cycle through L1, L2, and L1 to L2.	Motor On Heater On/Off	• L1 voltage should be 120 VAC ± 10% • L2 voltage should be 120 VAC ± 10% • L1 to L2 voltage should be 240* VAC ± 10%
6			Airflow test near completion.	Motor On Heater On/Off	The display will count down the final 15 seconds of the AirFlow detection routine.
7			Airflow detection complete	Motor On Heater Off	When the airflow routine is complete, the seven-segment display will show airflow result (0=BAD, 1=GOOD, 2=INVALID). Also, Dryness Level will display results (Less=Bad, More=Good, Nothing=Invalid).
8	WATER		Press the START button to begin water system test.	Drum Light On	No water valve present, no water actuated, but display shows "h2o" when running.
9			Steam test running	Drum Light On	

NOTE: At any time during the test, press and hold the START button for 5 seconds to jump to the water system test.
* Dryer performance is optimized for 2-phase, 240 VAC service. If complaint is made regarding dryer performance and the L1 to L2 voltage is ~208 VAC, dryer may be connected to a 3-phase service with reduced wattage that will decrease dryer performance.

For Service Technician Use Only

Software Version Display

NOTE: The Software Version Display mode will time out after 10 minutes of user inactivity and return to standby mode.

Entry Procedure

To enter Software Version Display, press and **hold** the **2nd** button used to activate the Service Diagnostic mode for 5 seconds. Upon entry, the display will automatically cycle through the following information:

- UI software revision code (U: major revision number, U: minor revision number, U: test revision number)
- UI Hex file software revision code (H: major revision number, H: minor revision number, H: test revision number)
- Touch control software revision code (t: major revision number, t: minor revision number, t: test revision number)
- CCU software revision code (C: major revision number, C: minor revision number, C: test revision number)

Exit Procedure

Pressing the **POWER** button will exit Software Version Display and return dryer to standby mode.

Fault/Error Codes

Refer to customer fault/error codes below and service fault/error codes on page 5-6.

Fault/Error Code Display Method

Fault codes are displayed by alternately showing F# and E#. All fault codes have an F# and an E#. The F# indicates the suspect System/Category. The E# indicates the suspect Component system.

Up to four Fault/Error codes may be stored. When the oldest fault code is displayed, additional presses of the **3rd** button will result in a triple beep, then display of the most recent fault code. If each press of the **3rd** button results in a triple beep and the display shows “888”, no saved fault codes are present.

Advancing Through Saved Fault/Error Codes

Procedure for advancing through saved fault codes:

Press and release the 3rd button used to activate Service Diagnostics	⇨ beep tone ⇨	most recent fault code is displayed
Repeat	⇨ beep tone ⇨	second most recent fault code is displayed
Repeat	⇨ beep tone ⇨	third most recent fault code is displayed
Repeat	⇨ beep tone ⇨	fourth most recent fault code is displayed
Repeat	⇨ beep tone ⇨	back to the most recent fault code

Clearing Fault Codes

To clear stored fault codes, enter Service Diagnostic mode. Then press and hold the **3rd** button used to enter Service Diagnostic mode for 5 seconds. Once the stored fault codes are successfully erased, the seven segment display will show “888”.

EXITING SERVICE DIAGNOSTIC MODE

Use either of the two methods below to exit diagnostic mode.

- Pressing and holding the **1st** button used to activate the Service Diagnostic mode for 5 seconds.
- Pressing the **POWER** button once or twice, depending on diagnostic procedure.

Customer Fault/Error Codes

Code	Description	Explanation and Recommended Procedure
PF	Power Failure	PF indicates that a power failure occurred while the dryer was running. Press START to continue the cycle, or press POWER to clear the display.
L2	Low Line Voltage	L2 indicates low L2 voltage (less than 50 V) is detected at the CCU. • Refer to Fault/Error Code “F4E4”, page 5-7, for recommended procedure.

For Service Technician Use Only

Service Fault/Error Codes

⚠ WARNING

Electrical Shock Hazard

Disconnect power before servicing.

Replace all parts and panels before operating.

Failure to do so can result in death or electrical shock.

Code	Description	Explanation and Recommended Procedure
F1E1	Cycle Control Unit (CCU) Problem	Indicates a CCU problem. • Verify all connections to and from the CCU. • See TEST #1: CCU Power Check, page 6-4.
F2E1	User Interface (UI) Problem (stuck button)	Indicates a stuck button (depressed for over 20 seconds) or UI mismatch. This fault code will ONLY appear when in the service diagnostic mode. • See TEST #6: Buttons and Indicators, page 6-17.
F3E1	Outlet Thermistor Open	Indicates that the outlet thermistor is open. Temperature drops below 18° F (> 50k ohms). • See TEST #4c: Thermistors, page 6-14.
F3E2	Outlet Thermistor Shorted	Indicates that the outlet thermistor has shorted. Temperature above 250° F (< 500 ohms). • See TEST #4c: Thermistors, page 6-14.
F3E5	Compressor and Outlet Thermistors Open	Indicates that the Compressor and Outlet Thermistors are open. Will occur if the P14 connector is not plugged into the CCU.
F3E6	Moisture Sensor Open	Indicates the moisture sensor strip is open. This fault code will ONLY appear when in the service diagnostic mode. • See TEST #5: Moisture Sensor, page 6-15.
F3E7	Moisture Sensor Shorted	Indicates that the moisture sensor strip has shorted. This fault code will ONLY appear when in the service diagnostic mode. • See TEST #5: Moisture Sensor, page 6-15.
F3E8	Compressor Sensor Open	Indicates that the compressor sensor is open. This fault code will stop the dryer.
F3E9	Compressor Sensor Shorted	Indicates that the compressor sensor has shorted. This fault code will stop the dryer.
F4E1	Heater Relay or Connector Problem	Indicates no voltage detected at the heater relay. This fault code appears ONLY when in the Diagnostic Test Mode. • Unplug dryer or disconnect power and check that the wires are plugged into the heater element(s) and the relay(s) on the CCU.
F4E3	Restricted Air Flow`	Indicates low air flow that may affect dryer performance. • Confirm that airflow system is not blocked; check lint screen, secondary lint filter, and exhaust fan.

Continued on next page

For Service Technician Use Only

Service Fault/Error Codes

Continued from page 5-7

Code	Description	Explanation and Recommended Procedure
F4E4	L2 Line Voltage Error	Indicates low L2 voltage (less than 50 V) is detected at the CCU. • Check to see if a household fuse has blown or a circuit breaker has tripped. • Confirm the power cord is properly installed and plugged into the power outlet. • Unplug dryer or disconnect power and check the relay connections on the CCU.
F6E1 F6E2	Communications Error UI to CCU Communication Error CCU to UI	Communication between the CCU and UI has not been detected. • Unplug dryer or disconnect power. • Check the harness continuity and connections between the CCU and UI. • Check AC and DC supplies. See TEST #1: CCU Power Check, page 6-4. • Replace the User Interface. • Replace the CCU.
F9E1	Drain System Error	Indicates that the float switch is in full position and the CCU has been in run mode for 60 seconds.
LF	Lint Filter Removed	Indicates that the lint filter has been removed from running position. • Place the filter back into running position, and verify that it is properly seated.

For Service Technician Use Only

Troubleshooting Guide

NOTE: Always check for error codes first (page 5-7)

Problem	Possible Cause	Checks & Tests
Won't Power Up • No operation • No keypad response • No LEDs or display	No power to dryer.	Check power at outlet, check circuit breaker, fuses, or junction box connections.
	Connection problem between AC plug and dryer.	See Test #2: Supply Connections, page 6-6.
	Connections between CCU and UI.	Check connections and harness continuity between CCU and UI.
	Power supplies not present at machine electronics.	See Test #1: CCU Power Check, page 6-4.
	User Interface problem.	See Test #6: Buttons & Indicators, page 6-17.
Will Not Start Cycle (No response when START button is pressed.)	Door not fully closed or striking the door latch.	Be sure the door is completely closed, then press and hold the START button.
	Door Switch problem.	See Test #7: Door Switch, page 6-18.
	Drive Belt problem.	See Test #3: Motor Circuit, page 6-8.
	Motor problem.	See Test #3: Motor Circuit, page 6-8.
	User Interface problem.	See Test #6: Buttons & Indicators, page 6-17.
	CCU problem.	See Test #1: CCU Power Check, page 6-4.
	Lint filter not present ("LF" is displayed).	Place the filter back into running position, and verify that it is properly seated.
Will Not Shut Off When Expected	Poor airflow.	Check lint screens and fan. Clean if necessary.
	Check the Start/Pause button.	Perform UI Component Test under Component Activation.
	Moisture Sensor problem.	See Test #5: Moisture Sensor, page 6-15.
	Thermistor problem.	See Test #4c: Thermistors, page 6-14.
	User Interface problem.	See Test #6: Buttons & Indicators, page 6-17.
	CCU problem.	See Test #1: CCU Power Check, page 6-4.
Console Won't Accept Selections	User selects invalid option.	Refer customer to "Use and Care Guide".
	User Interface problem.	See Test #6: Buttons & Indicators, page 6-17.
Drum Will Not Spin	Drive Belt problem.	See Test #3: Motor Circuit, page 6-8.
	Door switch problem.	See Test #7: Door Switch, page 6-18.
	Motor problem.	See Test #3: Motor Circuit, page 6-8.
	CCU problem.	See Test #1: CCU Power Check, page 6-4.
Will Not Heat	Check Installation.	Verify proper dryer installation.
	Check for L1 and L2.	Perform CCU L1 and L2 tests under Install Diagnostics.
	Heater system malfunction.	See Test #4: Heat System, page 6-10
	CCU problem.	See Test #1: CCU Power Check, page 6-4.
Heats in Air Cycle	Heater coil shorted.	See Test #4: Heat System, page 6-10
	Heater relay shorted.	See Test #4: Heat System, page 6-10
	Heater system problem.	See Test #4: Heat System, page 6-10
Shuts Off Before Clothes Are Dry	Dryness setting for auto cycle.	Increase drying times for one or more auto cycles.
	Lint screens full.	Clean if necessary. Refer customer to "Use and Care Guide".
	Moisture Sensor problem.	See Test #5: Moisture Sensor, page 6-15.
	Adjust Customer Focused Dryness Level.	See Test #5a: Adj. Cust. Focused Dryness Check, page 6-16.

Section 6: Testing

This section provides a wiring diagram, control board specifications, testing procedures and strip circuits for the "HybridCare™ Dryer with Heat Pump Technology."

For Service Technician Use Only

⚠ DANGER

Electrical Shock Hazard

Only authorized technicians should perform diagnostic voltage measurements.

After performing voltage measurements, disconnect power before servicing.

Failure to follow these instructions can result in death or electrical shock.

⚠ WARNING

Electrical Shock Hazard

Disconnect power before servicing.

Replace all parts and panels before operating.

Failure to do so can result in death or electrical shock.

Voltage Measurement Safety Information

When performing live voltage measurements, you must do the following:

- Verify the controls are in the off position so that the appliance does not start when energized.
- Allow enough space to perform the voltage measurements without obstructions.
- Keep other people a safe distance away from the appliance to prevent potential injury.
- Always use the proper testing equipment.
- After voltage measurements, always disconnect power before servicing.

IMPORTANT: Electrostatic Discharge (ESD) Sensitive Electronics
ESD problems are present everywhere. Most people begin to feel an ESD discharge at approximately 3000V. It takes as little as 10V to destroy, damage, or weaken the main control assembly. The new main control assembly may appear to work well after repair is finished, but a malfunction may occur at a later date due to ESD stress.

- **Use an anti-static wrist strap. Connect wrist strap to green ground connection point or unpainted metal in the appliance**

-OR-

- **Touch your finger repeatedly to a green ground connection point or unpainted metal in the appliance.**
- **Before removing the part from its package, touch the anti-static bag to a green ground connection point or unpainted metal in the appliance.**
- **Avoid touching electronic parts or terminal contacts; handle electronic control assembly by edges only.**
- **When repackaging main control assembly in anti-static bag, observe above instructions.**

IMPORTANT SAFETY NOTICE — "For Technicians only"

This service data sheet is intended for use by persons having electrical, electronic, and mechanical experience and knowledge at a level generally considered acceptable in the appliance repair trade. Any attempt to repair a major appliance may result in personal injury and property damage. The manufacturer or seller cannot be responsible, nor assume any liability for injury or damage of any kind arising from the use of this data sheet.

For Service Technician Use Only

WIRING DIAGRAM

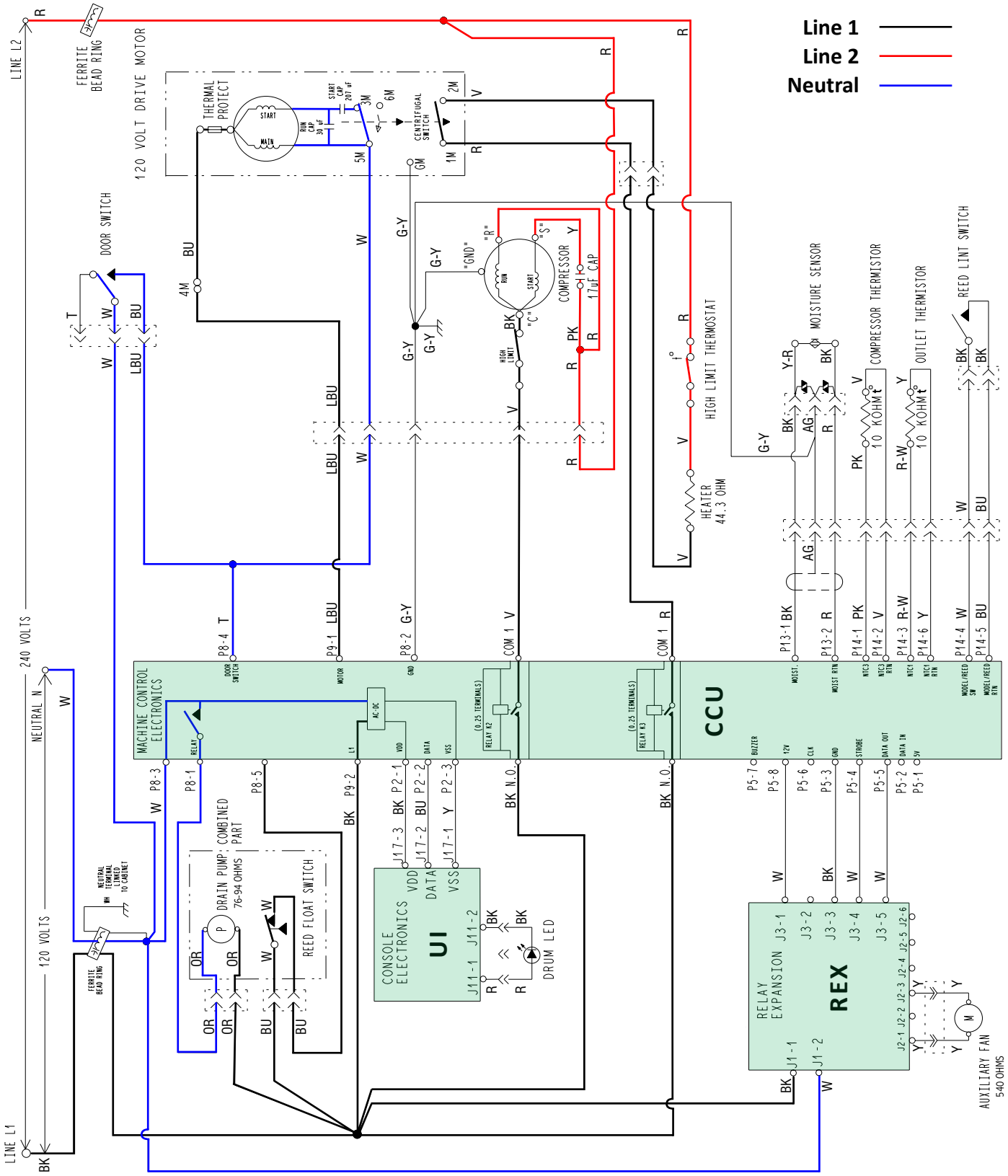

IMPORTANT: Electrostatic discharge may cause damage to machine control electronics. See page 6-2 for ESD information.

For Service Technician Use Only

⚠ DANGER

Electrical Shock Hazard

Only authorized technicians should perform diagnostic voltage measurements.

After performing voltage measurements, disconnect power before servicing.

Failure to follow these instructions can result in death or electrical shock.

Component Testing

TESTING DRYER COMPONENTS FROM THE CONTROL

Before testing any of the components, perform the following checks:

- The most common cause for mis-diagnosed control failure is poor connections. Therefore, disconnecting, inspecting and reconnecting wires will be necessary throughout test procedures.
- All tests/checks should be made with a VOM or DVM having a sensitivity of 20,000 ohms-per-volt DC, or greater.
- Check all connections before replacing components, looking for broken or loose wires, failed terminals, or wires not pressed into connectors far enough.
- Voltage checks must be made with all connectors attached to the boards.
- Resistance checks must be made with power cord unplugged or power disconnected, and with wiring harness or connectors disconnected from the control.

The testing procedures in this section may require the use of needle probes to measure voltage. Failure to use needle probes will damage the connectors.

TEST #1: CCU Power Check

This test is used to determine if power is present at the machine control electronics. This test assumes that proper voltage is present at the outlet.

1. Unplug dryer or disconnect power.
2. Check for appropriate line voltages at the outlet: 240VAC (electric 2-phase) or 208VAC (electric 3-phase).
   - ➢ If line voltage is present, go to step 3.
   - ➢ If line voltage is not present, check for tripped circuit breaker or blown household fuse. If CB (circuit breaker) is not tripped, have customer check with qualified electrician.
3. Remove top panel to access the machine electronics.
4. CCU VAC – With voltmeter set to AC, connect black probe to CCU P8-3 (N) and red probe to P9-2 (L1). (See Figure 1.) Plug in dryer or reconnect power.
   - ➢ If 120VAC is present, unplug dryer or disconnect power and go to step 5.
   - ➢ If 120VAC is not present, unplug dryer or disconnect power and perform TEST #2: Supply Connections, page 11.
5. CCU +5VDC – With voltmeter set to DC, unplug connector P2 from the CCU and connect black probe to CCU P2-3 (ground) and red probe to P2-1 (+5V DC). Plug in dryer or reconnect power.
   - ➢ If +5VDC is present, unplug dryer or disconnect power and go to step 8.
   - ➢ If +5VDC is not present, go to step 6.
6. Unplug dryer or disconnect power. Unplug P14 from the CCU. Plug in dryer or reconnect power and repeat step 5.
   - ➢ If +5VDC returns, one of the thermistors has shorted. To diagnose thermistors, see TEST #4a, page 16.
   - ➢ If +5VDC is not present, go to step 7.
7. Unplug dryer or disconnect power. Reconnect P14 to the CCU and unplug P2 from the CCU. Plug in dryer or reconnect power and repeat step 5. Perform voltage check inside header P2 on CCU, between pins 1 & 3—DO NOT SHORT PINS TOGETHER.
   - ➢ If +5VDC is still missing, unplug dryer or disconnect power and replace the CCU.
   - ➢ If +5VDC returns, unplug dryer or disconnect power and check harnesses and connections between the CCU and user interface (UI). If acceptable, replace the UI.
8. CCU +12VDC – with voltmeter set to DC, connect black probe to CCU P5-3 (ground) and red probe to P5-8 (+12VDC). Plug in dryer or reconnect power.
   - ➢ If +12VDC is present, go to step 9.
   - ➢ If +12VDC is not present, unplug dryer or disconnect power and replace the CCU.
9. Unplug dryer or disconnect power.
10. Reassemble all parts and panels.
11. Perform steps under “Install Diagnostics”, page 5-4, to verify repair.

Continue to next page for CCU board diagram and CCU connectors & pinouts

For Service Technician Use Only

CCU BOARD (FIGURE 1)

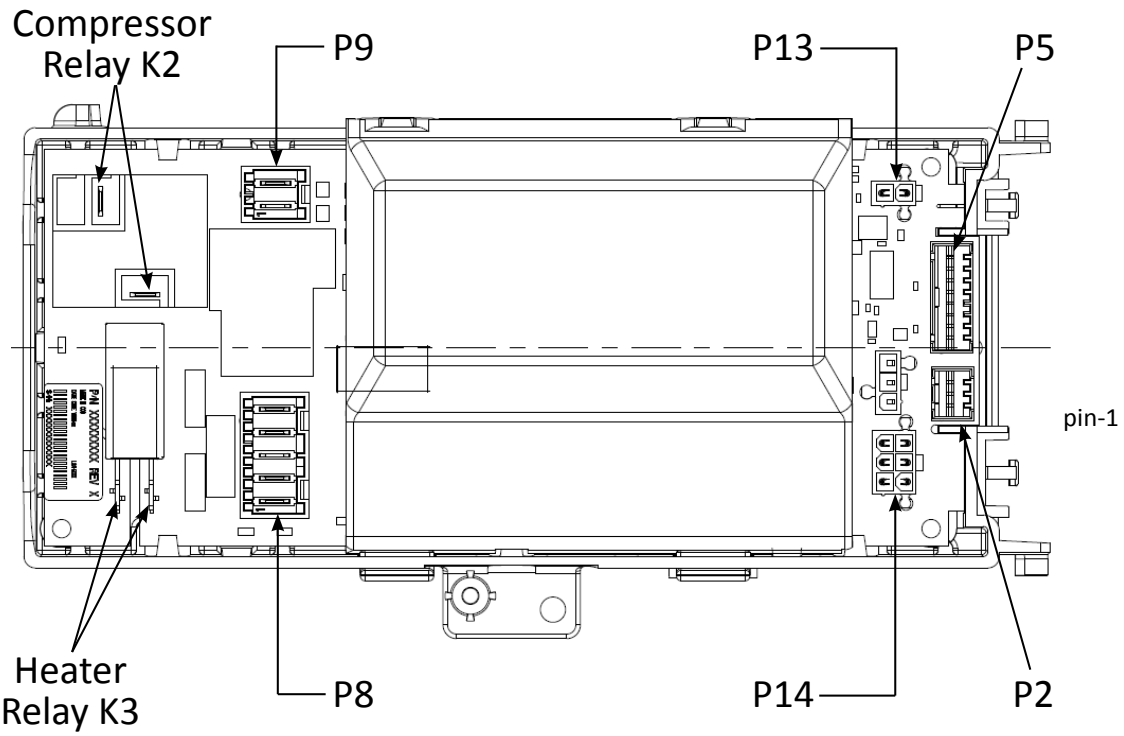

CONNECTOR PIN-OUTS

CONNECTOR P2
(User Interface)

P2-1	(BK)	+5 VDC, (UI)
P2-2	(BU)	DATA, (UI)
P2-3	(Y)	5V GND, (UI)

CONNECTOR P5
(Relay Expansion Board)

P5-1	NA	
P5-2	NA	
P5-3	(BK)	GND, (REX)
P5-4	(W)	Strobe, (REX)
P5-5	(W)	Data Out, (REX)
P5-6	NA	
P5-7	NA	
P5-8	(W)	12 VDC, (REX)

CONNECTOR P9
(Motor, L1)

P9-1	(LBU)	L1, (Dryer Motor)
P9-2	(BK)	L1

CONNECTOR P8
(Drain, Door Switch, Neutral)

P8-1	(OR)	Neutral, (Drain Pump)
P8-2	(G/Y)	Chassis GND
P8-3	(W)	Neutral
P8-4	(T)	Neutral, (Door Switch)
P8-5	(BU)	L1, (Reed Float Switch)

CONNECTOR P13
(Moisture Sensor)

P13-1	(BK)	Moisture Sensor
P13-2	(R)	Moisture Sensor Return

CONNECTOR P14
(Thermistors/Lint Reed Switch)

P14-1	(PK)	Compressor Thermistor
P14-2	(V)	Compressor Thermistor Return
P14-3	(R/W)	Outlet Thermistor
P14-4	(W)	Reed Switch
P14-5	(BU)	Reed Switch Return
P14-6	(Y)	Outlet Thermistor Return

For Service Technician Use Only

⚠ WARNING

Electrical Shock Hazard

Disconnect power before servicing.

Replace all parts and panels before operating.

Failure to do so can result in death or electrical shock.

TEST #2 Supply Connections

This test assumes that proper voltage is present at the outlet, and a visual inspection indicates that the power cord is securely fastened to the terminal block.

U.S. Installations:

1. Unplug dryer or disconnect power.
2. Remove the cover plate from the top right corner of the back of the dryer. See figure 1.

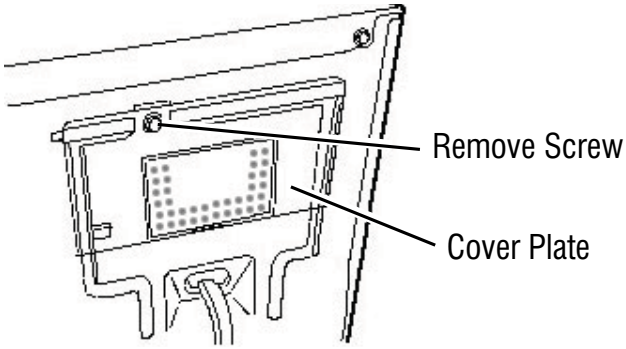

Figure 1 - Remove the cover plate.

3. With an ohmmeter, check for continuity between the neutral (N) terminal of the plug and the center contact on the terminal block. See figure 2.
   - ➢ If there is no continuity, replace the power cord and test the dryer.
   - ➢ If there is continuity, go to step 4.
4. In a similar way, check which terminal of the plug is connected to the left-most contact on the terminal block and make a note of it. This will be L1 (black wire) in the wiring diagram. See figure 2.
   - ➢ When this is found, go to step 5.
   - ➢ If neither of the plug terminals have continuity with the left-most contact of the terminal block, replace the power cord and retest dryer.

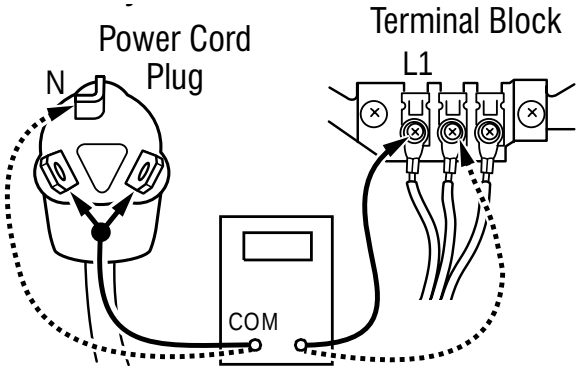

Figure 2 - Plug-to-terminal connections for electric dryer.

5. Access the machine electronics without disconnecting any wiring to the CCU.
6. With an ohmmeter, check for continuity between the L1 terminal of the plug (found in step 4) and P9-2 (black wire) on the CCU.
   - ➢ If there is continuity, go to step 7.
   - ➢ If there is no continuity, check that wires to the terminal block are mechanically secure. If so, replace the main wire harness and test the dryer.
7. Check for continuity between the neutral (N) terminal of the plug and P8-3 (white wire) on the CCU.
   - ➢ If there is continuity, go to step 8.
   - ➢ If there is no continuity, and the mechanical connections of the wire are secure, replace the main wire harness.
8. Visually check that ALL connectors are fully inserted into the CCU.
9. Visually check that ALL connectors are fully inserted into the UI.
10. Reassemble all parts and panels.
11. Plug in dryer or reconnect power.
12. Perform steps under “Install Diagnostics”, page 5-4, to verify repair.

For Service Technician Use Only

Canadian Installations:

1. Unplug dryer or disconnect power.
2. Remove the cover plate from the top right corner of the back of the dryer. See figure 1.
3. Access the machine electronics without disconnecting any wiring to the CCU.
4. With an ohmmeter, check the continuity from L1 and N plug terminals of the power cord to the terminals for L1 and N on the CCU. See figure 3.
   - ➢ If continuity exists for both connections, go to step 6.
   - ➢ If an open circuit is found, check the integrity of the connections of the power cord to the harness in the dryer; harness to the CCU; and the integrity of the power cord itself.

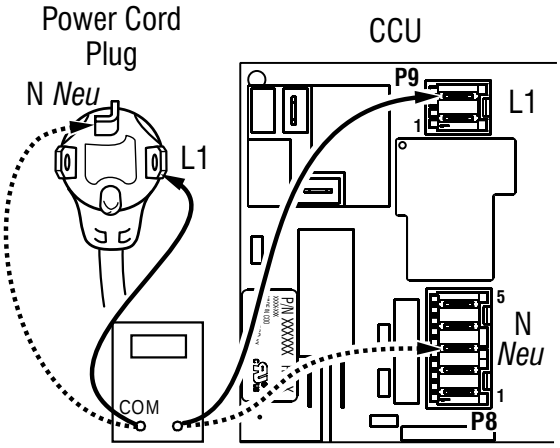

Figure 3 - Plug-to-terminal connections for electric dryer

5. If it is necessary to replace the power cord, remove the retaining clip that secures the cord to the back panel. Disconnect the cord from the main harness and the ground wire from the rear panel, then pull out the power cord.
6. Visually check that ALL connectors are fully inserted into the CCU.
7. Visually check that ALL connectors are fully inserted into the UI.
8. Reassemble all parts and panels.
9. Plug in dryer or reconnect power.
10. Perform steps under “Install Diagnostics”, page 5-4, to verify repair.

For Service Technician Use Only

⚠ WARNING

Electrical Shock Hazard

Disconnect power before servicing.

Replace all parts and panels before operating.

Failure to do so can result in death or electrical shock.

TEST #3 Motor Circuit

This test will check the wiring to the motor and the motor itself. The following items are part of this motor system:

Part of Motor System	Electric Dryer
Drum belt	✓
Door switch	✓
Harness/connection	✓
Drive motor	✓
Centrifugal switch	✓
Machine control electronics	✓

NOTE: Refer to strip circuit on page 6-9 to diagnose the drive motor.

1. Unplug dryer or disconnect power.
2. Remove top panel to access the machine electronics.
3. Check for loose, worn, or damaged drum belt—repair as necessary.
4. Door Switch problems can be uncovered by following procedure under TEST #7: Door Switch, page 6-18; however, if this was not done, the following can be performed without applying power to the dryer. Connect an ohmmeter across CCU P8-3 (neutral, white wire) and P8-4 (door, tan wire).
   - ➢ With the door properly closed, the ohmmeter should indicate a closed circuit (0–2 Ω).
   - ➢ If not, check harnesses and connections between CCU and door switch. If good, replace the door switch assembly.
5. Motor Circuit Check - Access the CCU and measure the resistance across P8-4 and P9-1.
   - ➢ If resistance across P8-4 and P9-1 is in the range of 1 to 6 Ω, the motor circuit is acceptable. Replace the CCU.
   - ➢ Otherwise, continue to step 6.
6. Check the wiring and components in the path between these measurement points by referring to the wiring diagram on page 6-3.
7. Check the drive motor. Slowly remove the drum belt from the spring-loaded pulley, gently letting the pulley down. See figure 1

.

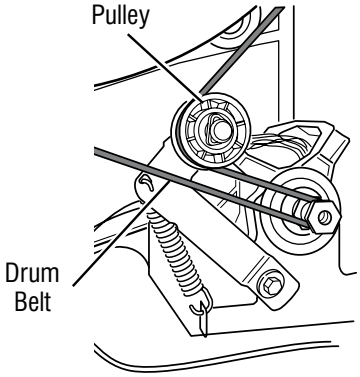

Figure 1 - Slowly remove drum belt.

8. Remove the white connector from the drive motor switch. See figure 2.

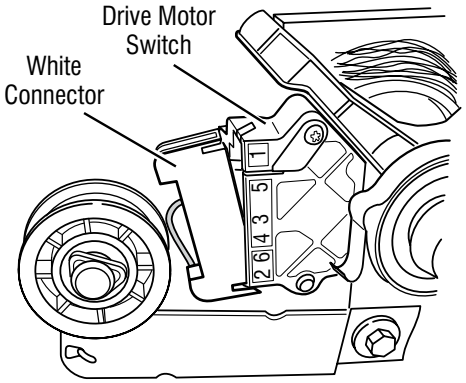

Figure 2 - Remove white connector

9. Remove the bare copper wire terminal from pin 5 of black drive motor switch. See figure 3.

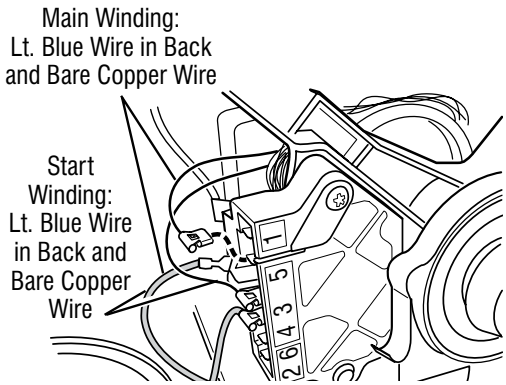

Figure 3 - Main and start winding measure points

For Service Technician Use Only

10. Using figure 3 and the strip circuit below, check for the resistance values of the motor's Main and Start winding coils as shown in the following table.

    NOTE: Main and Start winding coils must be checked at the motor.

Winding	Resistance in ohms	Contact Points of Measurements
MAIN	3.3–3.6	Lt. blue wire in back at pin 4 and bare copper wire terminal removed from pin 5 of black drive motor switch
START	2.7–3.0	Lt. blue wire in back at pin 4 and bare copper wire terminal on pin 3 of black drive motor switch

- ➢ If the resistance at the motor is correct, there is an open circuit between the motor and CCU.
- ➢ If the Main or Start winding resistance is much greater or less than the values listed in the table above, replace the motor.

11. Reassemble all parts and panels.
12. Plug in dryer or reconnect power.
13. Perform steps under "Install Diagnostics", page 5-4, to verify repair.

Pluggable Drive Motor Switch

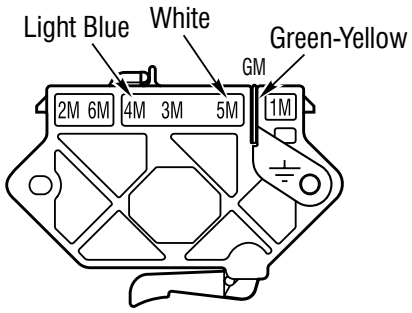

Figure 4 - Pluggable Drive Motor Switch

Centrifugal Switch (Motor)

Function	Contacts 1M	2M	3M	5M	6M
Start			●	●	
Run	●	●		●	●

● = *Contacts closed*

Figure 5 - Centrifugal Switch Contacts

Testing the Motor Start & Run Capacitors

1. Discharge the capacitor by touching the leads of a 20,000 Ω resistor to the two terminals.
2. Disconnect the wires from the capacitor terminals.
3. **ANALOG METER** - Set your meter to ohms (resistance) function, range to R x 10,000, or the highest scale on the meter. Touch the meter leads to the capacitor terminals. The meter should indicate nearly a short circuit initially, then a steady increase in resistance should be noted. The needle will move more slowly as it creeps up. If your capacitor has a resistance of at least 100K (100,000 ohms) it is good.

   If the needle doesn't move when you connect the leads to the capacitor, the capacitor is open. If the needle indicates a short initially and stays there, the capacitor is shorted. Replace the capacitor.

   DIGITAL METER - If you have a digital multi-meter with an autoranging function, set the meter to the ohms (resistance) function. Pay attention to the resistance units displayed on the meter readout. No units = ohms. "K" = the readout value times 1,000 ohms. "M" = the readout value times 1,000,000 ohms.

   Proceed as described with the analog meter for the test. What you're looking for is a low initial resistance which climbs steadily until it exceeds 100,000 ohms. If the value is below 100,000 ohms (100K) but above 10,000 ohms (10K), the capacitor is weak and should be replaced.

MOTOR STRIP CIRCUIT

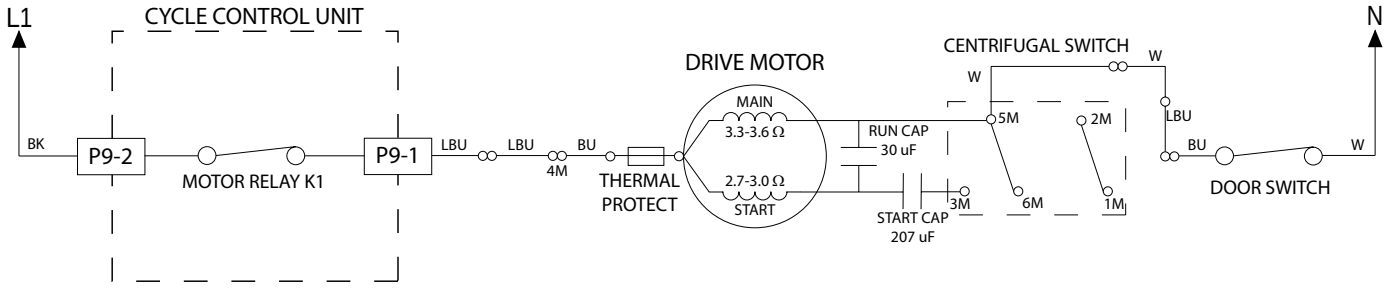

For Service Technician Use Only

⚠ DANGER

Electrical Shock Hazard

Only authorized technicians should perform diagnostic voltage measurements.

After performing voltage measurements, disconnect power before servicing.

Failure to follow these instructions can result in death or electrical shock.

TEST #4: Heating System

This test is performed when either of the following situations occurs:

✓ **Dryer does not heat**

✓ **Heater will not shut off**

This test checks the components making up the heating circuit. The following items are part of this system:

Part of Heater System	Electric Dryer
Harness/connection	✓
Heater relay	✓
Heater element assembly	✓
Compressor relay	✓
Heat pump assembly	✓
Outlet thermistor	✓
Compressor thermistor	✓
Centrifugal switch	✓
High Limit Thermostat	✓
Machine control electronics	✓

TEST #4a: Heater Element

Heater does not heat:

✓ Quick Check: Perform steps under “Install Diagnostics”, page 5-4, to test for L1 and L2 line voltage.

1. Unplug dryer or disconnect power.
2. Remove top panel to access the machine electronics.
3. Remove rear panel to access heater assembly and high limit thermostat.
4. Check Heater—on the CCU, use an ohmmeter to measure the resistance at the violet wire terminal on the heater relay.
   - ➢ If the resistance is ≤ 50 Ω, go to step 6.
   - ➢ If an open circuit is detected, go to step 5.
5. Visually check the wire connection between the relay and the heater. If the connection looks good, check for continuity across heater (violet wire to center red wire). Refer to strip circuit on this page.
   - ➢ Replace the heater if it is electrically open.
6. Check High Limit Thermostat—visually check the wire connections from the heater and centrifugal switch to the high limit thermostat. If the connections look good, check for continuity across the high limit thermostat.
   - ➢ Replace the high limit thermostat if it is electrically open.
7. If no open circuit is detected, remove the P14 connector from the CCU and measure the outlet thermistor resistance between P14-3 and P14-6 at the connector. Refer to “Outlet Thermistor Resistance” table on page 6-14 for temperatures and their associated values.
   - ➢ If the resistance corresponds to the temperature, the outlet thermistor is good. Go to step 8.
   - ➢ If the thermistor resistance does not agree with the table, replace the outlet thermistor.
8. If the preceding steps did not correct the problem and L1 and L2 were both detected, replace the CCU. If L2 was not detected, inspect the centrifugal switch before replacing the CCU.
9. Reassemble all parts and panels.
10. Plug in dryer or reconnect power.
11. Perform steps under “Install Diagnostics”, page 5-4, to verify repair.

HEATER STRIP CIRCUIT

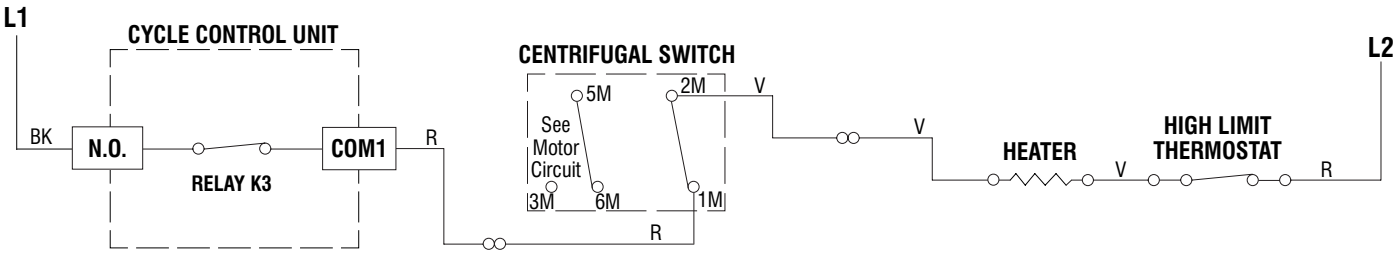

For Service Technician Use Only

Heater will not shut off:

1. Unplug dryer or disconnect power.
2. Remove top panel to access the machine electronics.
3. Remove connector P14 from the CCU and measure the resistance between P14-3 and P14-6 at the connector. Refer to “Outlet Thermistor Resistance” table on page 6-14 for temperatures and their associated values.
   - If the resistance corresponds to the temperature, the outlet thermistor is good.
   - If the thermistor resistance does not agree with the table, replace the outlet thermistor.
4. Check heater coil for a short to ground (usually inside the heater box). Repair or replace if necessary.
5. Plug in dryer or reconnect power.
6. Run a Load Diagnostics Test. Check heater relay output on CCU. Unplug dryer or disconnect power. With a voltmeter set to AC, connect voltmeter to terminals 1 & 2 for heater relay. Plug in dryer or reconnect power. Measure the voltage across terminals 1 & 2 for heater relay.
   - If voltage is present (~240VAC), the relay is open and working normally.
   - If little or no voltage is present, the relay is closed and heater is activated. Unplug dryer or disconnect power and replace the CCU.
7. Unplug dryer or disconnect power.
8. Reassemble all parts and panels.
9. Plug in dryer or reconnect power.
10. Perform steps under “Install Diagnostics”, page 5-4, to verify repair.

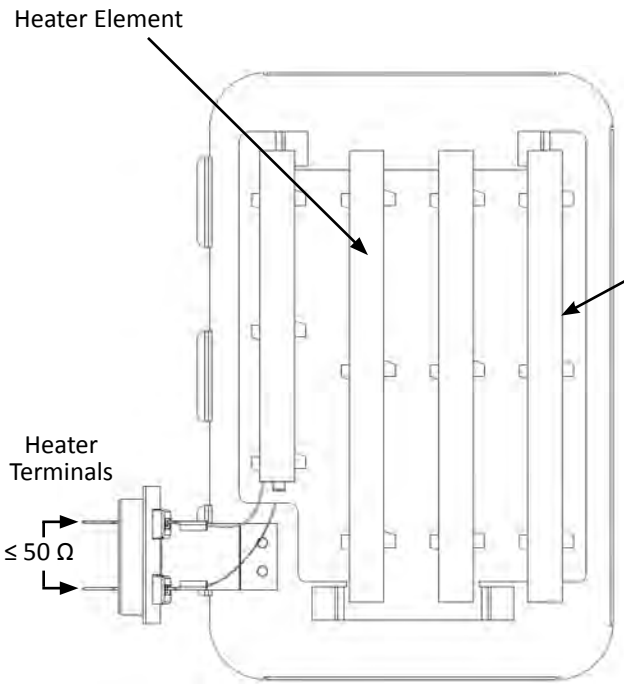

Figure 1 - Heater Assembly

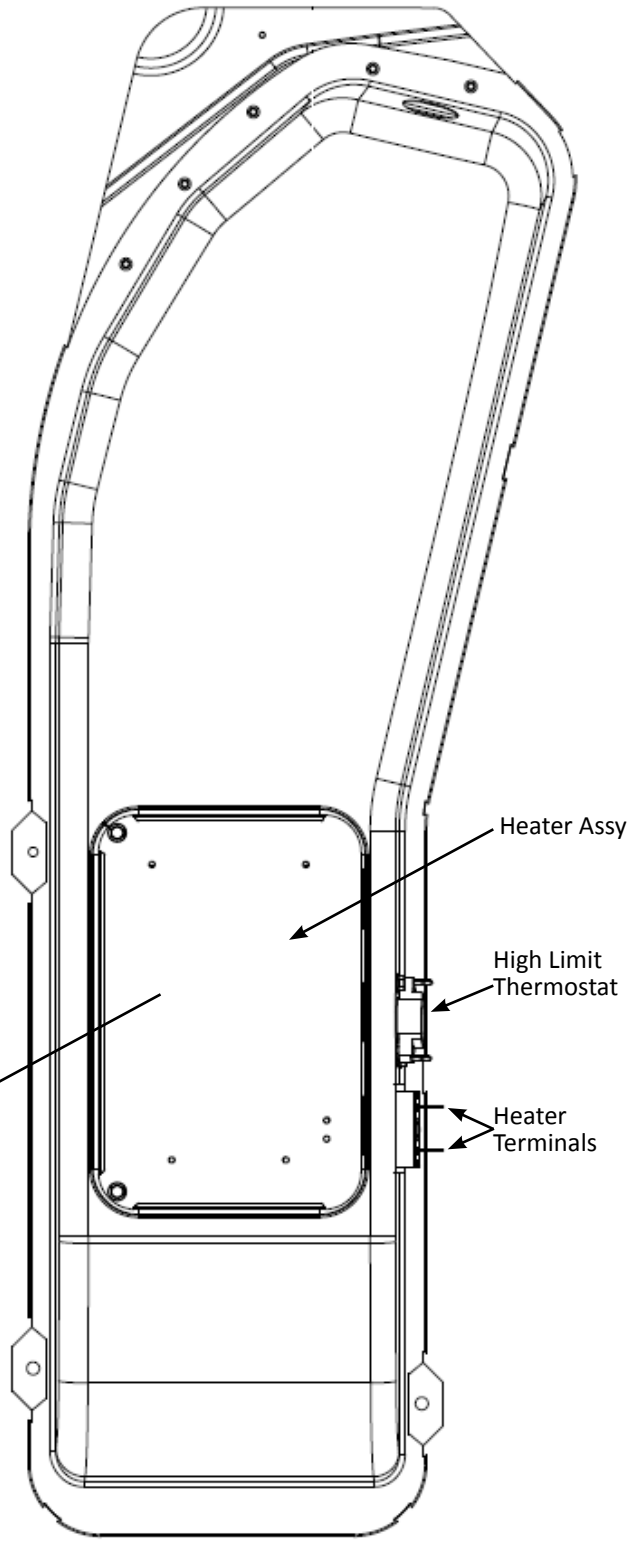

Figure 2 - Inlet Duct & Heater Assembly

For Service Technician Use Only

⚠ DANGER

Electrical Shock Hazard

Only authorized technicians should perform diagnostic voltage measurements.

After performing voltage measurements, disconnect power before servicing.

Failure to follow these instructions can result in death or electrical shock.

TEST #4b: Heat Pump

IMPORTANT: At the time of writing this job aid, the Heat Pump must be replaced as an assembly if any of the sealed system components malfunction. This includes the compressor, heat exchanger components (evaporator and condenser), the post condenser, expansion valve, and all tubing and fittings.

Heat Pump does not heat:

PROCESS AIR FLOW:

1. Similar to a vented dryer, restricted air flow will cause drying performance issues in a ventless dryer. Check all three filters (primary lint filter, secondary lint filter, and the service filter) for restriction and clean as necessary.
2. If a lot of lint or debris is observed on the service filter, remove the heat exchanger cover and vacuum the service filter and any lint or debris from the fins and coils of the evaporator and condenser.

COMPRESSOR:

Compressor runs but cycles due to overheating.

1. Check for restricted air flow caused by dirty filters or heat exchanger. (See “Process Air Flow” above.)
2. Auxiliary Fan - used to cool the post condenser and compressor electronics. Perform TEST #10: Auxiliary Fan/ Relay Expansion, page 6-21, to verify the operation of the auxiliary (post condenser)fan.

Compressor does not start/humming noise:

1. Quick Check: Perform steps under “Install Diagnostics”, page 5-4, to test for L1 and L2 line voltage.
   - ➢ If L1 and L2 are present, go to step 2.
   - ➢ If L1 and L2 are not present, go to TEST #2: Supply Connections on page 6-6.
2. Unplug dryer or disconnect power.
3. Perform the procedure to remove the belt and drum on page 4-10, to access the compressor/heat pump assembly.
4. Visually check the connections between the compressor and run capacitor.
5. If the connections look good, check the capacitor for leaks, corrosion, bulging of the metal canister, or any other physical signs that the capacitor should be replaced.
6. Test the compressor run capacitor.
   a. Discharge the capacitor by touching the leads of a 20,000 Ω resistor to the two terminals.
   b. Disconnect the wires from the capacitor terminals.
   c. **ANALOG METER** - Set your meter to ohms (resistance) function, range to R x 10,000, or the highest scale on the meter. Touch the meter leads to the capacitor terminals. The meter should indicate nearly a short circuit initially, then a steady increase in resistance should be noted. The needle will move more slowly as it creeps up. If your capacitor has a resistance of at least 100K (100,000 ohms) it is good.

      If the needle doesn’t move when you connect the leads to the capacitor, the capacitor is open. If the needle indicates a short initially and stays there, the capacitor is shorted. Replace the capacitor.

      DIGITAL METER - If you have a digital multi-meter with an autoranging function, set the meter to the ohms (resistance) function. Pay attention to the resistance units displayed on the meter readout. No units = ohms. “K” = the readout value times 1,000 ohms. “M” = the readout value times 1,000,000 ohms.

      Proceed as described with the analog meter for the test. What you’re looking for is a low initial resistance which climbs steadily until it exceeds 100,000 ohms. If the value is below 100,000 ohms (100K) but above 10,000 ohms (10K), the capacitor is weak and should be replaced.
7. If the preceding steps did not correct the compressor problem, proceed to next section: “Compressor does not run.”

Compressor does not run:

1. Quick Check: Perform steps under “Install Diagnostics”, page 5-5, to test for L1 and L2 line voltage.
   - ➢ If L1 and L2 are present, go to step 2.
   - ➢ If L1 and L2 are not present, go to TEST #2: Supply Connections on page 6-6.
2. Unplug dryer or disconnect power.
3. Remove top panel to access the machine electronics.
4. Check Compressor Wiring—use an ohmmeter to measure the resistance at the violet wire terminal on the compressor relay (K2) and L2 at the terminal block.
   - ➢ If the resistance is between 2 to 15 Ω, go to step 11.
   - ➢ If an open circuit is detected, go to step 5.
5. Perform the procedure to remove the belt and drum, page 4-10, to access the compressor/heat pump assembly.
6. Visually check the connections between the compressor relay and the compressor components, and the compressor components and the L2 terminal.

For Service Technician Use Only

7. If the connections looks good, check for continuity between the violet wire terminal on the compressor relay (K2) and terminal “C” (common) on the compressor.
   - ➢ If there is continuity, go to step 9.
   - ➢ If there is no continuity, go to step 8.
8. Remove the compressor cover and check for continuity across the thermo-switch on the compressor (see Figure 1).
   - ➢ If there is continuity, go to step 9.
   - ➢ If there is no continuity, replace the thermo-switch.
9. Remove the compressor cover and remove all three (3) motor wires; Common (C)=Black, Run (R)=Red, Start (S)=Yellow). See Figure 1.

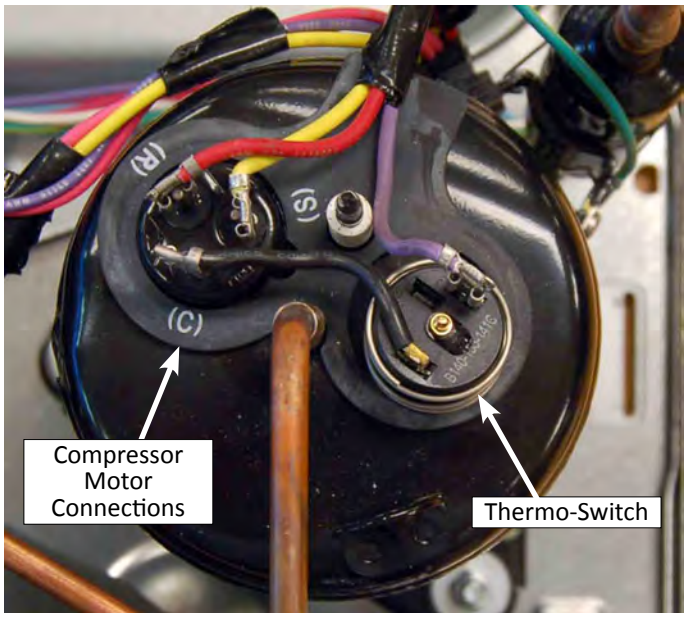

Figure 1 - Compressor Connections/Thermo-Swtich

10. Using the following chart and the strip circuit below, check for the resistance values of the compressor’s Run and Start winding coils as shown in the following table.

    NOTE: Run and Start winding coils must be checked at the compressor.

Winding	Resistance in ohms	Contact Points of Measurements
RUN	4.13 ±10%	Compressor terminal “C” to terminal “R”
START	6.27 ±10%	Compressor terminal “C” to terminal “S”
START & RUN	10.4 ±10%	Compressor terminal “R” to terminal “S”

- ➢ If the resistance at the compressor is correct, go to step 11.
- ➢ If the Run or Start winding resistance is much greater or less than the values listed in the table above, replace the heat pump base assembly.

11. If the preceding steps did not correct the problem and L1 and L2 were both detected in Step 1, replace the CCU.
12. Reassemble all parts and panels.
13. Plug in dryer or reconnect power.
14. Perform steps under “Install Diagnostics”, page 5-4, to verify repair.

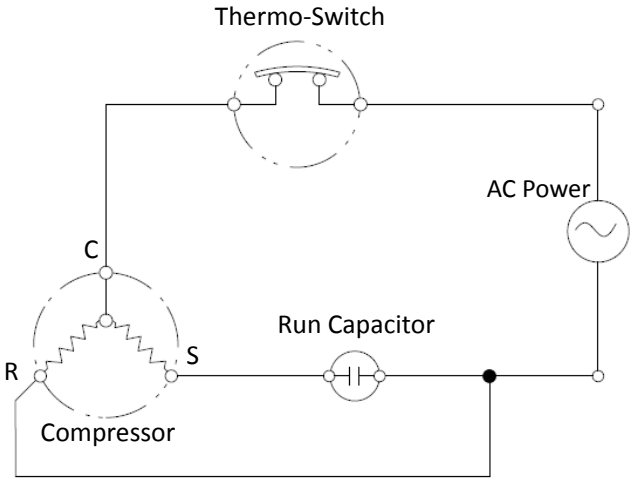

Figure 2 - Compressor Circuit

COMPRESSOR STRIP CIRCUIT

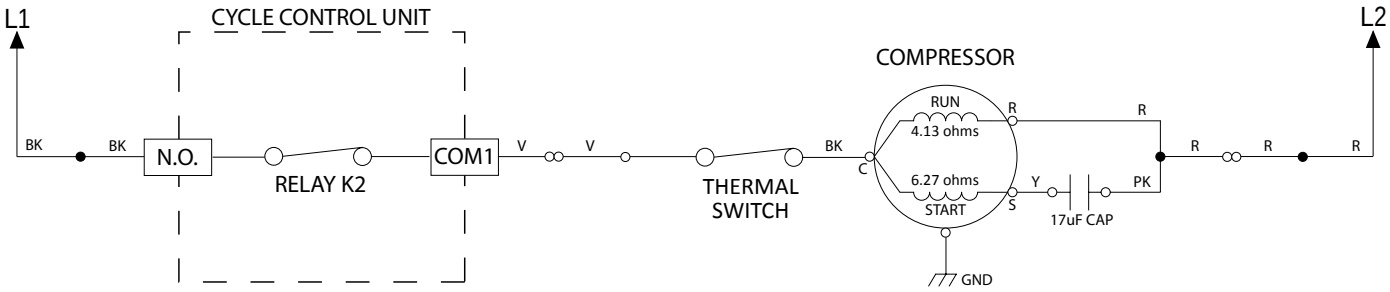

For Service Technician Use Only

⚠ WARNING

Electrical Shock Hazard

Disconnect power before servicing.

Replace all parts and panels before operating.

Failure to do so can result in death or electrical shock.

TEST #4c Thermistors

NOTE: Refer to strip circuit on page 6-16 to diagnose outlet and compressor thermistors.

Outlet Thermistor

The CCU monitors the exhaust temperature using the outlet thermistor, and cycles the heater relay on and off, depending on strategy, to maintain the desired temperature. **NOTE:** Begin with an empty dryer and a clean lint screen.

1. Unplug dryer or disconnect power.
2. Remove top panel to access the machine electronics.
3. Remove connector P14 from the CCU and measure the resistance between P14-3 and P14-6 at the connector. The following table gives temperatures and their associated resistance values.

NOTE: All thermistor resistance measurements must be made while dryer is unplugged and connector removed from CCU.

OUTLET THERMISTOR RESISTANCE			
TEMP °F (°C)	RES. RANGE k ohms	TEMP °F (°C)	RES. RANGE k ohms
50° (10°)	19.0-22.0	80° (27°)	8.5-10.5
60° (16°)	14.8-16.8	90° (32°)	6.8-8.8
70° (21°)	11.5-13.5	100° (38°)	5.0-7.0

- ➢ If the resistance is OK, the outlet thermistor is good. Proceed to step 4.
- ➢ If the thermistor resistance does not agree with the table, replace the outlet thermistor.

4. Check P14-3 and P14-6 to dryer cabinet ground. If either pin indicates continuity to ground (short), replace wiring harness; otherwise, proceed to step 5.
5. If the preceding steps did not correct the problem, replace the CCU.

Temperature Levels Incorrect – If no error code is displayed and the connections to the thermistor are good, check the exhaust temperature value at any or all of the temperature levels in question, using the **Timed Dry** cycle.

IMPORTANT: Be sure **Speed** is turned ON before testing.

1. Remove load from dryer.
2. Plug in dryer or reconnect power.
3. Run a **TIMED DRY** cycle of at least 5 minutes in duration. Select High, Medium, Low, or Extra Low. Turn on **Speed**.
4. Using a calibrated temperature probe, take a temperature measurement in the center of the exhaust outlet. The correct exhaust temperatures are as follows:

EXHAUST TEMPERATURES		
TEMPERATURE SETTING	HEAT TURNS OFF* °F (°C)	HEAT TURNS ON °F (°C)
High	113° ± 5° (45° ± 3°)	10-15° (6-8°) below the heat turn off temperature
Medium	98° ± 5° (37° ± 3°)	
Low	93° ± 5° (34° ± 3°)	
Extra Low	86° ± 5° (30° ± 3°)	

- ➢ If the temperature is not reached within ~10 minutes, check voltage level and for blockage, and then retest.
- ➢ If the temperature probe does not agree with temperature setting, replace the outlet thermistor.
- ➢ If the temperature probe confirms the temperature setting, retest at a different temperature setting.

5. If the preceding steps did not correct the problem, replace the CCU.

Compressor Thermistor

1. Unplug dryer or disconnect power.
2. Remove top panel to access the machine electronics.
3. Remove connector P14 from the CCU and measure the resistance between P14-1 and P14-2 at the connector. The following table gives temperatures and their associated resistance values.

   NOTE: All thermistor resistance measurements must be made while dryer is unplugged and connector removed from CCU.

- ➢ If the resistance is OK, the compressor thermistor is good. Proceed to step 4.
- ➢ If the thermistor resistance does not agree with the table, replace the compressor thermistor.

COMPRESSOR THERMISTOR RESISTANCE	
TEMP °F (°C)	RES. RANGE ohms
32° (0°)	35975
86° (30°)	9786
104° (40°)	6653
122° (50°)	4608
140° (60°)	3243
158° (70°)	2332
203° (95°)	1093

4. Check P14-1 and P14-2 to dryer cabinet ground. If either pin indicates continuity to ground (short), replace wiring harness; otherwise, proceed to step 5.
5. If the preceding steps did not correct the problem, replace the CCU.

For Service Technician Use Only

⚠ WARNING

Electrical Shock Hazard

Disconnect power before servicing.

Replace all parts and panels before operating.

Failure to do so can result in death or electrical shock.

TEST #5: Moisture Sensor

This test is performed when an automatic cycle stops too soon, or runs much longer than expected.

NOTE: Dryer will shut down automatically after 4 hours and 10 minutes.

The following items are part of this system:

Part of Moisture System	Electric Dryer
Harness/connection	✓
Metal sensor strips	✓
Machine control electronics	✓

NOTE: Refer to strip circuit below to diagnose moisture sensor.

1. Activate the Loads Test mode. See procedures on page 5-3.
2. Open the door. Using a wet cloth or one finger, jointly touch both sensor strips.
   - ➢ If a repeating beep tone is heard and an alphanumeric number is displayed on the console, the moisture sensor passes the test. Go to step 9.
   - ➢ If a beep tone is not heard, or a repeating beep tone is heard before touching both moisture strips, continue with step 3.

   NOTE: Over-drying may be caused by a short circuit in the sensor system.
3. Unplug dryer or disconnect power.
4. Remove top panel to access the machine electronics.
5. Access the moisture sensor wires by removing the console and front panel. Disconnect the 3-wire moisture sensor connector located below the door opening between the front panel and bulkhead.
6. Access the CCU and remove connector **P13** from the circuit board. Check the wire harness for continuity between P13 and the moisture sensor connector.
   - ➢ If there is continuity, go to step 7.
   - ➢ If there is no continuity, replace the main harness.
7. Measure the resistance across the outermost contacts of the connector that includes the two MOVs.

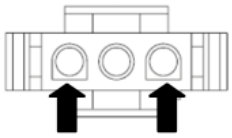

   - ➢ If a small resistance is measured, clean the two metal moisture strips inside the drum. If a small resistance is measured after cleaning, replace sensor harness.
   - ➢ If a small resistance is not measured, go to step 8.
8. Measure the resistance across each of the outermost contacts and the center terminal (ground connection).

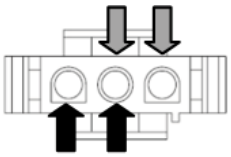

   - ➢ If a resistance less than infinity is measured, replace the sensor harness.
9. If the moisture sensor diagnostic test passes, check the outlet thermistor: TEST #4a, page 6-15.
   - ➢ If the problem persists after replacing the moisture sensor and thermistor, consider adjusting the dryness level (see TEST #5a: Adjusting Customer-Focused Dryness Level).
10. If the preceding steps did not correct the problem, replace the CCU.

MOTOR SENSOR STRIP CIRCUIT

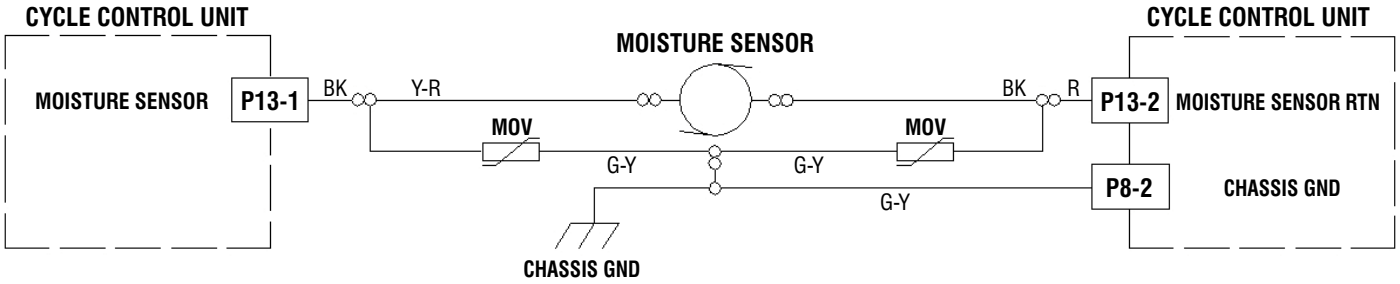

For Service Technician Use Only

⚠ WARNING

Electrical Shock Hazard

Disconnect power before servicing.

Replace all parts and panels before operating.

Failure to do so can result in death or electrical shock.

TEST #5a: Adjusting Customer-Focused Dryness Level

NOTE: If the customer complains about the clothes being less dry or more dry than desired and the moisture sensor passes TEST #5: Moisture Sensor, step 2, the total dry time can be lengthened or shortened by changing the Customer-Focused Dryness Level from "**1**" (standard auto cycle) to a "**2**" (15% more drying time), "**3**" (30% more drying time), "**4**" (15% less drying time), or "**5**" (30% less drying time) auto cycle.

1. In standby mode (dryer plugged in but not powered up), press and hold the **DRYNESS LEVEL** button for approximately 3 seconds. The dryer will beep and "**CF**" is displayed followed by the current dryness setting on the 7-segment display. The factory default value is "**1**".

2. Pressing the dryness level button cycles the dryness setting between 1, 2, 3, 4, and 5 in that order, starting at the current setting. The new setting is displayed in the 7-segment display.

3. With the display showing the desired dryness setting, press the **START** button to save the drying mode and exit to standby mode (the START button in this mode does not start a drying cycle). The result will be stored in EEPROM of the CCU and will be retained after a power loss.

NOTE: If there is no user activity for 20 seconds, or a button other than START or DRYNESS LEVEL is pressed, the dryness setting is reverted back to its previous setting.

4. Press the **POWER** button at any time to cancel changes and exit from this mode.

THERMISTORS STRIP CIRCUIT (refer to page 6-14 for diagnostics)

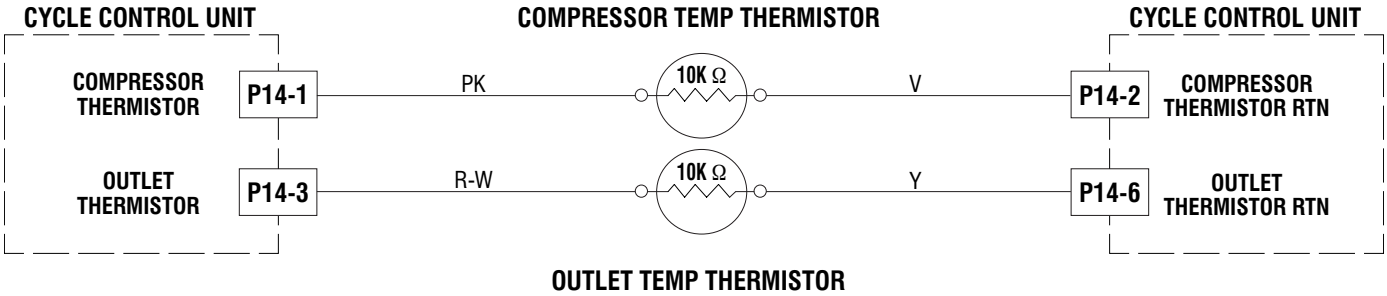

For Service Technician Use Only

⚠ WARNING

Electrical Shock Hazard

Disconnect power before servicing.

Replace all parts and panels before operating.

Failure to do so can result in death or electrical shock.

TEST #6: Buttons and Indicators

This test is performed when any of the following situations occurs during the "Console Buttons and Indicators Test" (see page 5-3).

✓ **None of the indicators or display turn on**

✓ **Some buttons do not light**

✓ **No beep sound is heard**

None of the indicators or display turn on:

1. Unplug dryer or disconnect power.
2. Remove top panel to access the CCU and user interface (UI).
3. Visually check that ALL CCU connectors are inserted all the way into the CCU.
4. Visually check that ALL UI connectors are inserted all the way into the UI. See Figure 1 below.
5. Visually check that the UI and housing assembly is properly inserted into the front console.
6. If all visual checks pass, perform TEST #1: CCU Power Check, page 6-4, to verify supply voltages.
   - ➢ If supply voltages are present, replace the user interface and housing assembly.
   - ➢ If supply voltages are not present, replace the CCU.
7. Reassemble all parts and panels.
8. Plug in dryer or reconnect power.
9. Perform the "Console Buttons and Indicators Test" (see page 5-3) to verify repair.

Some buttons do not light:

1. Unplug dryer or disconnect power.
2. Remove top panel to access the CCU and user interface (UI).
3. Visually check that the UI and housing assembly is properly inserted into the front console.
4. If visual check passes, replace the UI and housing assembly.
5. Reassemble all parts and panels.
6. Plug in dryer or reconnect power.
7. Perform the "Console Buttons and Indicators Test" (see page 5-3) to verify repair.

No beep sound is heard:

1. Verify that the "Cycle Signal" volume is turned on. Press the CYCLE SIGNAL button to adjust the volume level.
2. Unplug dryer or disconnect power.
3. Remove top panel to access the CCU and user interface (UI).
4. Visually check that ALL CCU connectors are inserted all the way into the CCU.
5. Visually check that ALL UI connectors are inserted all the way into the UI. See Figure 1 below.
6. If all visual checks pass, replace the UI and housing assembly.
7. Reassemble all parts and panels.
8. Plug in dryer or reconnect power.
9. Perform the "Console Buttons and Indicators Test" (see page 5-3) to verify repair.

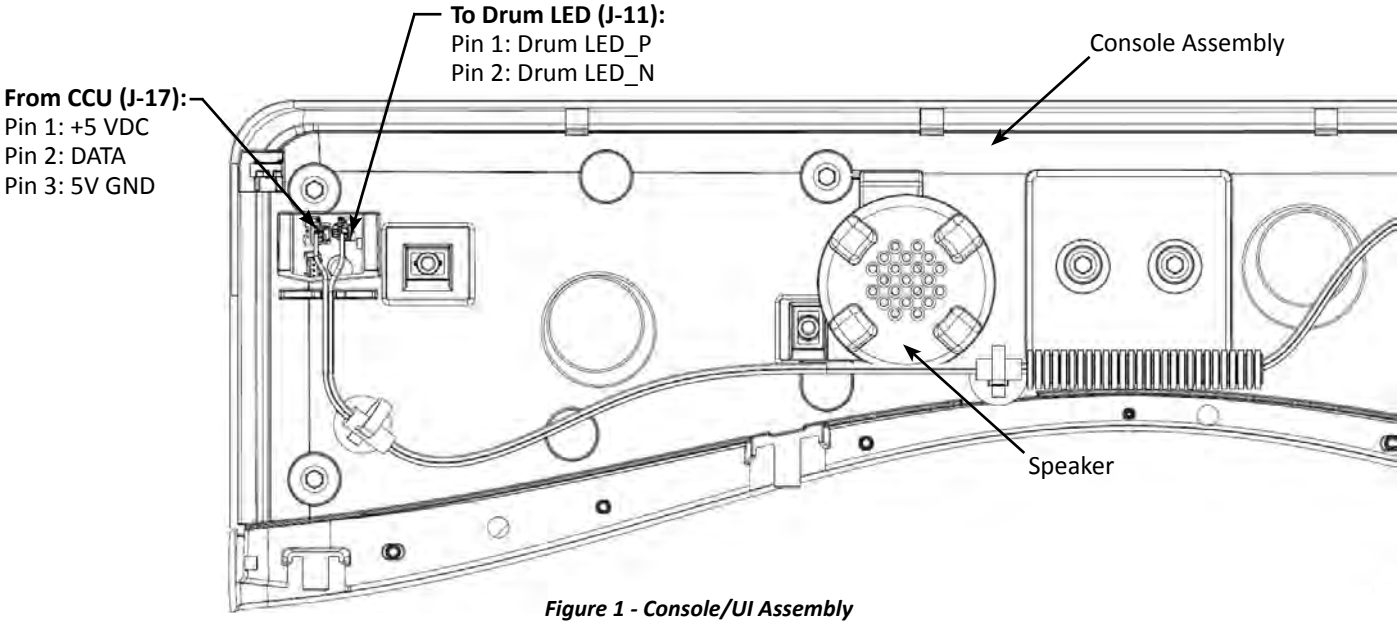

Figure 1 - Console/UI Assembly

For Service Technician Use Only

⚠ WARNING

Electrical Shock Hazard

Disconnect power before servicing.

Replace all parts and panels before operating.

Failure to do so can result in death or electrical shock.

Figure 1 - Door Open

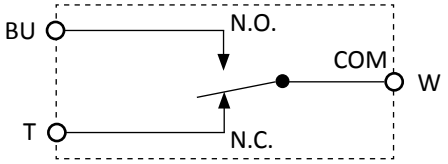

Figure 2 - Door Closed

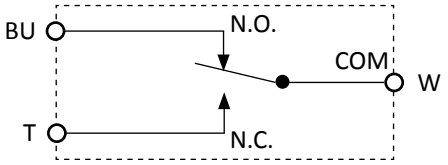

Figure 3 - Door Switch Connector

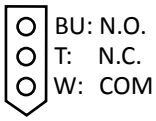

TEST #7: Door Switch

Activate the Loads Test mode. See procedures on page 5-3. Perform the steps under "Diagnostic: Door Switch/Drum LED." Functionality is verified when opening the door causes "EEE" to be displayed and turns on the drum light. Closing the door should turn off the drum light.

If the preceding conditions are not met:

1. Unplug dryer or disconnect power.
2. Remove top panel to access the machine electronics.
3. Check that the wires between the door switch and CCU are connected. (Refer to wiring diagram on page 6-3 and strip circuit below.)
   - ➢ If the connections are good, replace the wire and door switch assembly and retest.
   - ➢ If wire and door switch assembly have been replaced and dryer still does not start, replace the CCU.
4. Reassemble all parts and panels.
5. Plug in dryer or reconnect power.
6. Perform the steps under "Diagnostic: Door Switch/Drum LED" to verify repair.

Figure 4 - Door Switch Location

DOOR SWITCH STRIP CIRCUIT

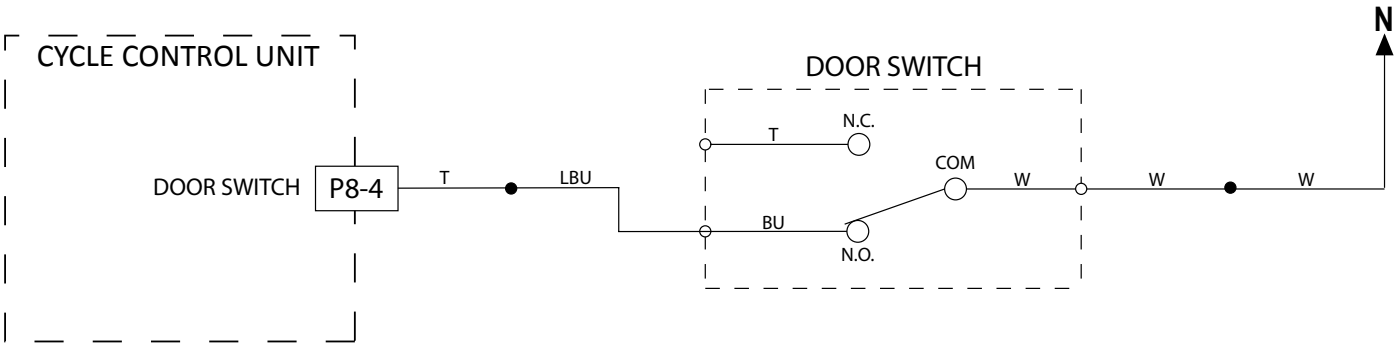

For Service Technician Use Only

⚠ DANGER

Electrical Shock Hazard

Only authorized technicians should perform diagnostic voltage measurements.

After performing voltage measurements, disconnect power before servicing.

Failure to follow these instructions can result in death or electrical shock.

DRUM LED STRIP CIRCUIT

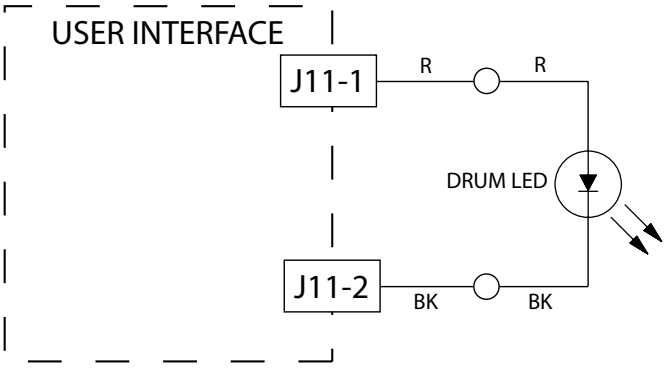

TEST #8: Drum LED

This test is performed if the drum LED does not light.

1. Pressing the **DRUM LIGHT** button on the console should toggle the button indicator on and off (and the drum LED on and off).
   - ➢ If the button indicator toggles on and off, go to step 2.
   - ➢ If the button indicator does not turn on, go to TEST #6 – "Some buttons do not light," page 6-17.
2. Unplug dryer or disconnect power.
3. Remove the top panel to access CCU and user interface (UI).
4. Verify the drum LED connector **J11** (see wiring diagram, page 23) is securely connected to the UI.
5. Check harness and inline connections between the drum LED and UI.
   - ➢ If the harness and connections are good, go to step 6.
   - ➢ If not, repair or replace as needed.
6. Unplug the drum LED connector J11 (see wiring diagram, page 6-3 and strip circuit at left) from the UI.
7. With a multimeter set to milliamps, connect multimeter to UI connector J11, pins 1 and 3. Plug in dryer or reconnect power. Press the **DRUM LIGHT** button on the console until the button indicator is on. Measure the current across UI connector J11, pins 1 and 3. If the drum LED driver is working properly, there should be a measurement of 150–370 mA.
   - ➢ If the current is present, unplug dryer or disconnect power and replace the drum LED.
   - ➢ If the current is not present, unplug dryer or disconnect power and replace the UI.
8. Reassemble all parts and panels.

Figure 1 - Drum LED Connector on UI

Figure 2 - Drum LED

For Service Technician Use Only

⚠ WARNING

Electrical Shock Hazard

Disconnect power before servicing.

Replace all parts and panels before operating.

Failure to do so can result in death or electrical shock.

TEST #9: Drain System

This test is performed when error code F9E1 is generated (the float switch is in full position and the CCU has been in run mode for 60 seconds).

NOTE: The Float Switch has two positions. The first (lower) position signals the CCU to activate the drain pump to remove water from the sump. The second (full) position signals the CCU to stop the dryer and generates the F9E1 error code.

The following items are part of this system:

Part of Moisture System	Electric Dryer
Harness/connection	✓
Drain Pump*	✓
Reed Float Switch*	✓
Machine control electronics	✓

*** NOTE:** The Drain Pump and Float Switch must be replaced as part of the Drain Hose & Bracket Assembly.

NOTE: Refer to strip circuit below to diagnose the drain pump and float switch.

1. If there is water beneath the front of the dryer, verify that the dryer is level and the drain hose is securely fastened to the drain port.
2. Verify that the drain hose (bottom center of back of dryer) is not pinched, kinked, plugged, or otherwise restricted.
3. Unplug dryer or disconnect power.
4. Remove top panel to access the machine electronics.
5. Verify that the orange wire coming from the drain pump is connected to the CCU, P8-1. Refer to the strip circuit below.
6. Verify that the blue wire coming from the reed float switch is connected to the CCU, P8-5. Refer to the strip circuit below.
7. Access the Drain System cover by performing the procedures on page 4-13.
   - ➢ Check that the drain hose, drain harness and float harness are connected to the drain system cover (see Figure 1).

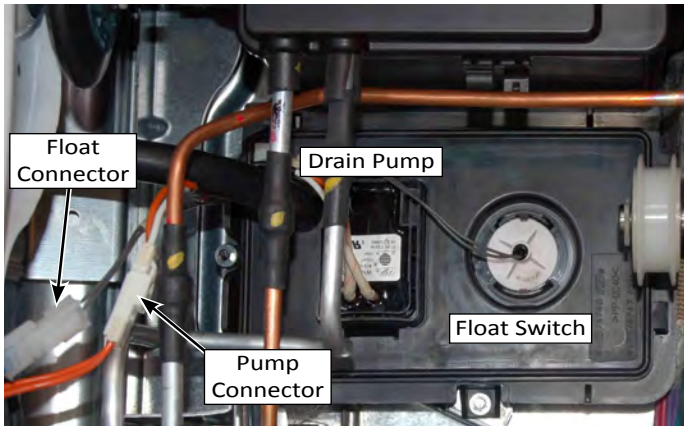

Figure 1 - Drain Pump & Float Switch

8. If everything is hooked up and the drain pump still does not drain water from the sump. Replace the "Drain Hose & Bracket Assembly" and retest.
9. If the preceding steps did not correct the problem, replace the CCU.

DRAIN PUMP / FLOAT SWITCH STRIP CIRCUIT

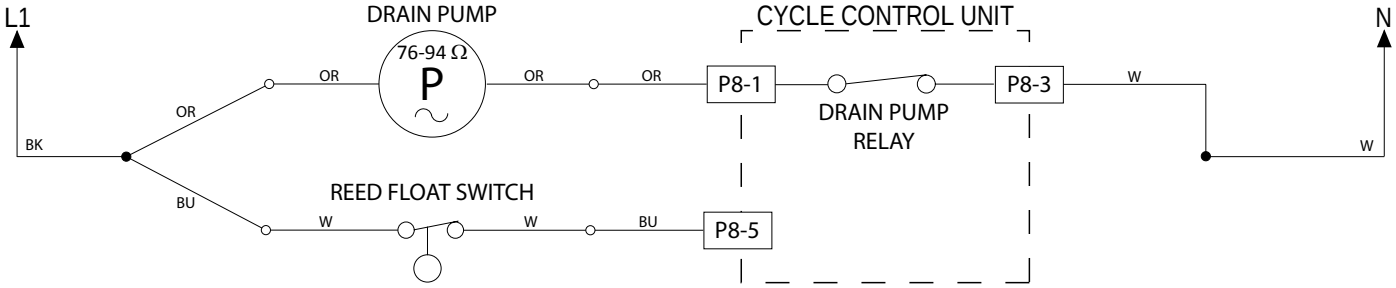

For Service Technician Use Only

⚠ DANGER

Electrical Shock Hazard

Only authorized technicians should perform diagnostic voltage measurements.

After performing voltage measurements, disconnect power before servicing.

Failure to follow these instructions can result in death or electrical shock.

TEST #10: Auxiliary Fan/Relay Expansion

This test is performed when the auxiliary fan is not spinning.

NOTE: To test the Auxiliary Fan, plug in dryer or reconnect power. Press power, select Timed Dry, High Temp, and press Start. Fan should start running.

The following items are part of this system:

Part of Moisture System	Electric Dryer
Harness/connection	✓
Auxiliary Fan	✓
Machine control electronics	✓

1. Unplug dryer or disconnect power.
2. Remove the fan grill on back panel to access auxiliary fan. Verify the grill and fan blades are free from obstructions and can spin.
3. Remove top panel to access machine electronics.
4. Visually check that the J2 connector is inserted all the way into the Relay Expansion board. Refer to Figure 1

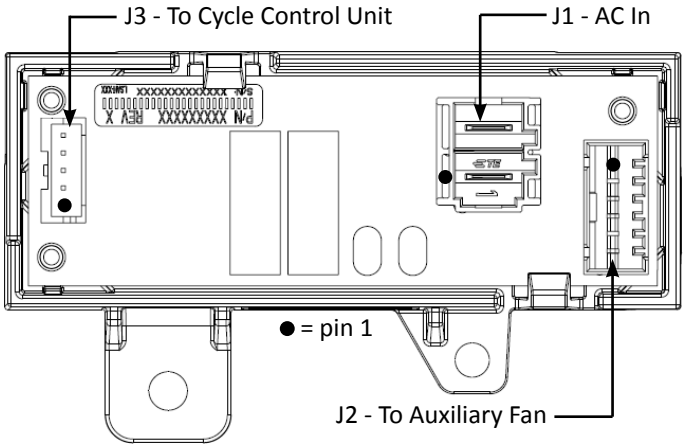

Figure 1 - Relay Expansion Board

- If visual check passes, go to step 4.
- If connector is not inserted properly, reconnect J2 and retest.

5. Remove connector J2 from the Relay Expansion board. With an ohmmeter, measure the resistance across pins 1 and 3.
6. Resistance should be approximately 130 Ω ±10% .
   - If the reading is infinite (open), go to step 7.
   - If the reading is correct, go to step 11.
7. Remove the rear panel to access auxiliary fan.
8. Visually check that the in-line fan connector (yellow wires) is securely connected (see Figure 2).

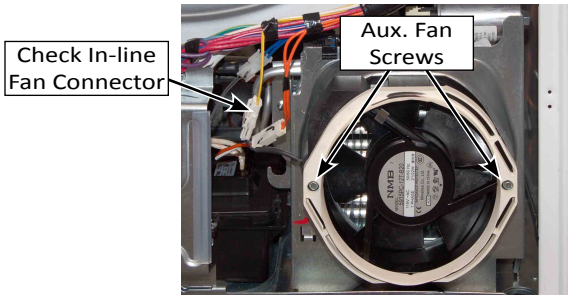

Figure 2 - Auxiliary Fan

- If visual check passes, go to step 9.
- If connections are loose, reconnect the in-line fan connector and retest.

9. With an ohmmeter, check harness for continuity between the fan and Relay Expansion board.
   - If there is continuity, go to step 10.
   - If there is no continuity, repair or replace the upper dryer harness and retest.
10. With an ohmmeter, measure the resistance across the two fan connector terminals. Resistance should be approximately 130 Ω ±10% .
    - If the reading is infinite (open), replace the auxiliary fan and retest.
    - If the reading is correct, go to step 11.
11. With voltmeter set to AC, connect black probe to Relay Expansion board J1-2 (N) and red probe to J1-1 (L1). (See Figure 1.) Plug in dryer or reconnect power.
    - If 120VAC is present, unplug dryer or disconnect power and go to step 12.
    - If 120VAC is not present, unplug dryer or disconnect power and perform TEST #2: Supply Connections, page 6-6.
12. With voltmeter set to AC, connect black probe to Relay Expansion board J2-1 and red probe to J2-3. (See Figure 1.) Plug in dryer or reconnect power.
    - If 120VAC is present, go to step 13.
    - If 120VAC is not present, unplug dryer or disconnect power and replace the Relay Expansion board.
13. If the preceding steps did not correct the auxiliary fan problems, replace the CCU.
    - Unplug washer or disconnect power.
    - Replace the CCU.
    - Reassemble all parts and panels.
    - Retest auxiliary fan operation.

Notes

PRODUCT SPECIFICATIONS & WARRANTY INFORMATION SOURCES

IN THE UNITED STATES:

FOR PRODUCT SPECIFICATIONS AND WARRANTY INFORMATION CALL:

FOR WHIRLPOOL PRODUCTS: 1-800-253-1301

FOR TECHNICAL ASSISTANCE WHILE AT THE CUSTOMER'S HOME CALL:

THE TECHNICAL ASSISTANCE LINE: 1-800-832-7174

HAVE YOUR STORE NUMBER READY TO IDENTIFY YOU AS AN AUTHORIZED IN-HOME SERVICE PROFESSIONAL

FOR LITERATURE ORDERS (CUSTOMER EXPERIENCE CENTER):

PHONE: 1-800-851-4605

FOR TECHNICAL INFORMATION AND SERVICE POINTERS:

www.servicematters.com

IN CANADA:

FOR PRODUCT SPECIFICATIONS AND WARRANTY INFORMATION CALL

1-800-461-5681

FOR TECHNICAL ASSISTANCE WHILE AT THE CUSTOMER'S HOME CALL:

THE TECHNICAL ASSISTANCE LINE: 1-800-488-4791

HAVE YOUR STORE NUMBER READY TO IDENTIFY YOU AS AN AUTHORIZED IN-HOME SERVICE PROFESSIONAL

HybridCare™ Duet® Dryer with Heat Pump Technology

W10764068