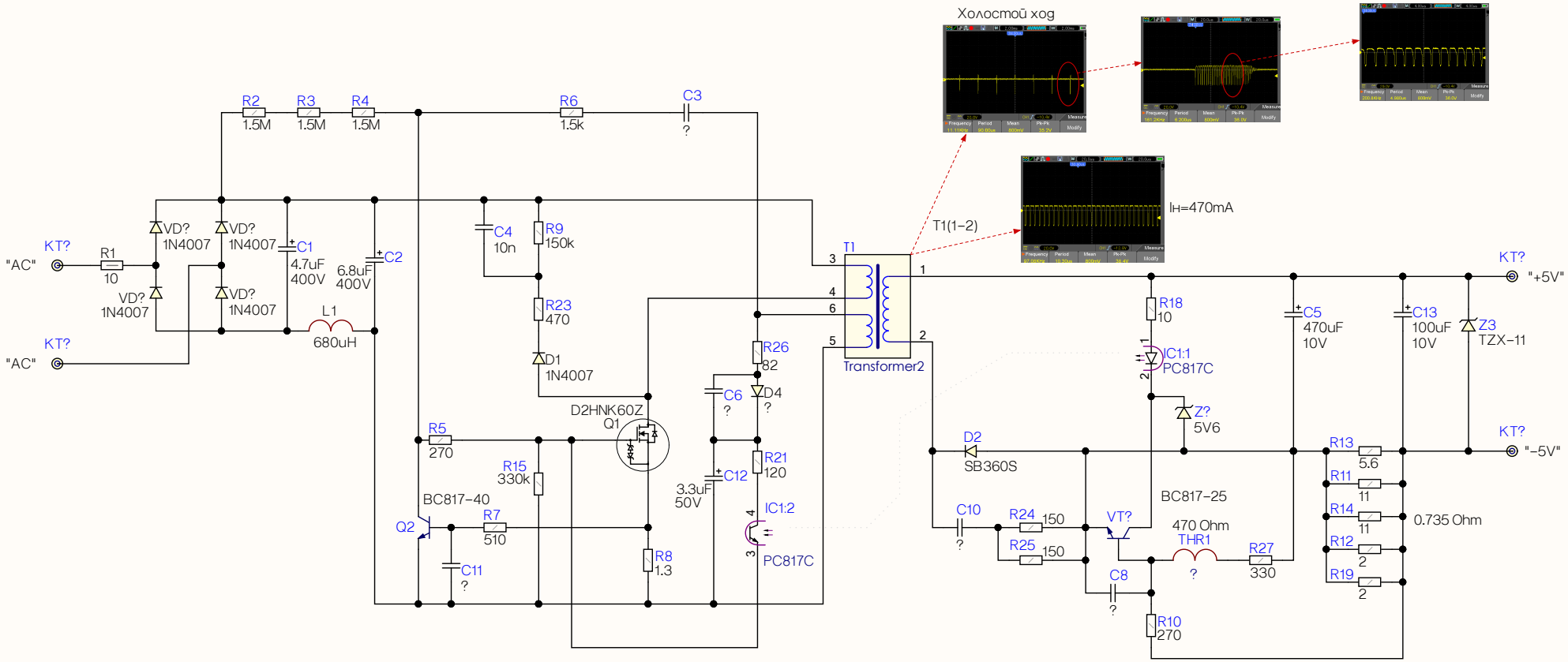


| Title | | |
|---|---|---|
| Size A3 | Number | Revision |
| Date: 19.02.2016 | Sheet of | |
| File: D:\WORK\..\Nokia AC-4E.SchDoc | Drawn By: | |