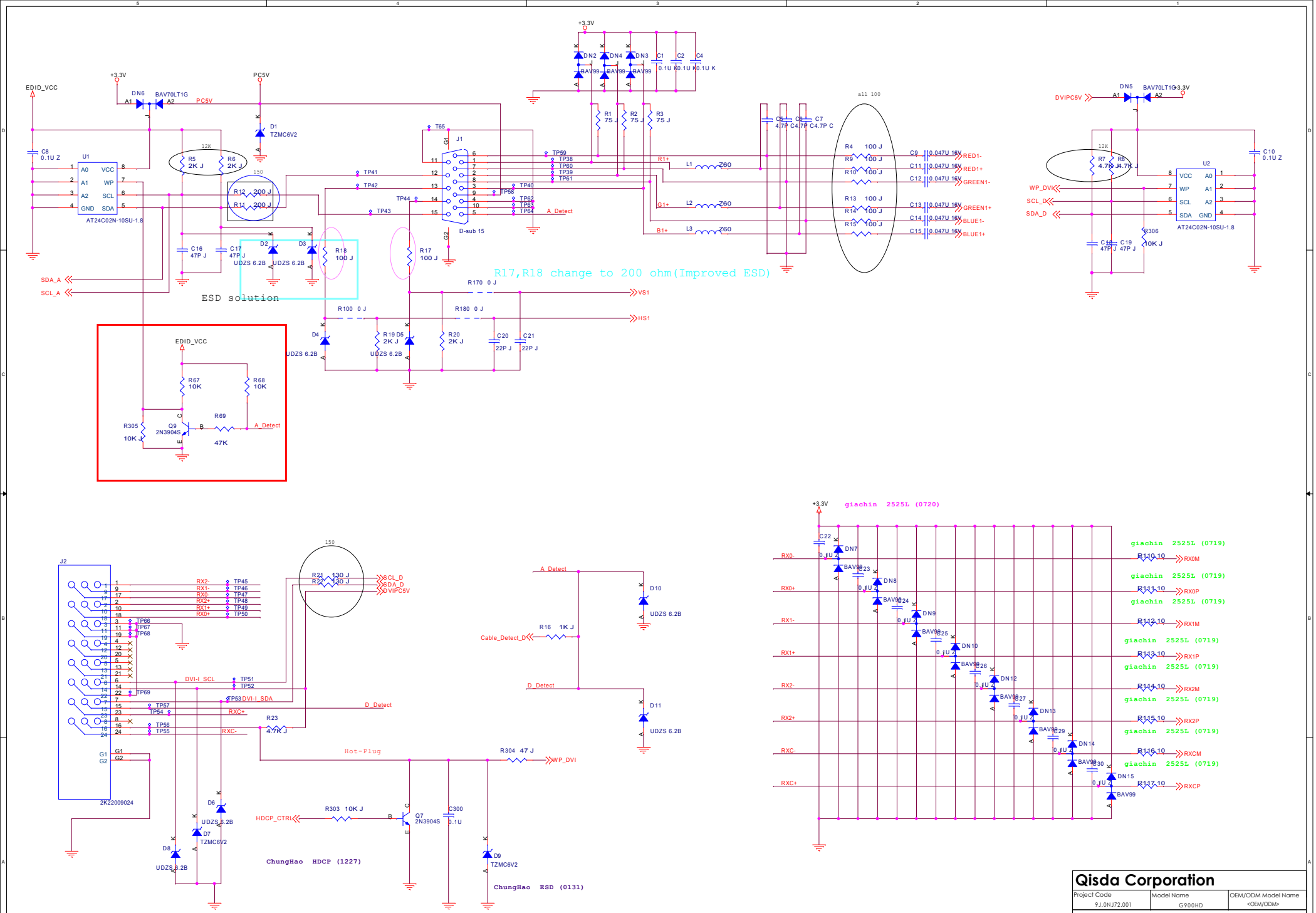

Qisda Corporation

Project Code	Model Name	OEM/ODM Model Name
9J.0NJ72.001	G900HD	<OEM/ODM>

Title: INTERFACE BOARD

Size	PCB P/N	PCB Rev.	Document Number	Rev.
<Size>	4H.0NJ01.S02	S02	9J.0NJ72.000-Q30-304-001	1

Date: Thursday, May 22, 2008 Sheet 2 of 6

Prepared By	Reviewed By	Approved By
ANGEL HU	TONY TC YU	ALLEN PC LEE

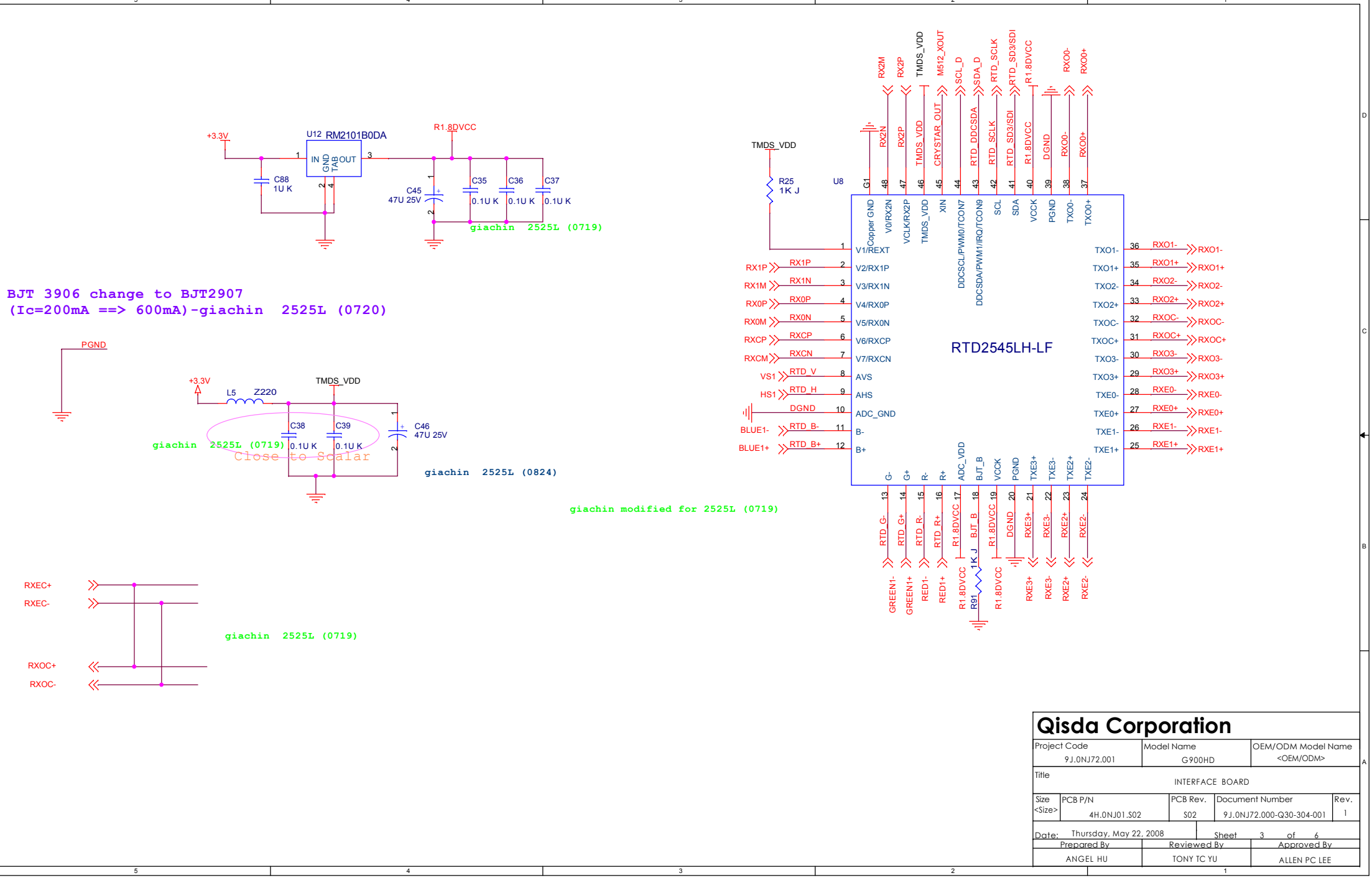
U12 RM2101B0DA
IN
GND
TAB
OUT
+3.3V
R1.8DVCC
C88
1U K
C45
47U 25V
C35
C36
C37
0.1U K
giachin 2525L (0719)
BJT 3906 change to BJT2907
(Ic=200mA ==> 600mA)-giachin 2525L (0720)
PGND
+3.3V
TMDS_VDD
L5
Z220
C38
C39
C46
47U 25V
0.1U K
giachin 2525L (0719)
Close to Scalar
giachin 2525L (0824)
giachin modified for 2525L (0719)
RXEC+
RXEC-
RXOC+
RXOC-
giachin 2525L (0719)
TMDS_VDD
R25
1K J
U8
RTD2545LH-LF
Copper GND
V0/RX2N
VCLK/RX2P
TMDS_VDD
XIN
DDCSCL/PWM0/TCON7
DDCSDA/PWM1/IRQ/TCON9
SCL
SDA
VCCK
PGND
TXO0-
TXO0+
V1/REXT
V2/RX1P
V3/RX1N
V4/RX0P
V5/RX0N
V6/RXCP
V7/RXCN
AVS
AHS
ADC_GND
B-
B+
TXO1-
TXO1+
TXO2-
TXO2+
TXOC-
TXOC+
TXO3-
TXO3+
TXE0-
TXE0+
TXE1-
TXE1+
G-
G+
R-
R+
ADC_VDD
BJT_B
VCCK
PGND
TXE3+
TXE3-
TXE2+
TXE2-
RX1P
RX1M
RX0P
RX0M
RXCP
RXCM
VS1
HS1
BLUE1-
BLUE1+
RTD_V
RTD_H
RTD_B-
RTD_B+
DGND
RXO1-
RXO1+
RXO2-
RXO2+
RXOC-
RXOC+
RXO3-
RXO3+
RXE0-
RXE0+
RXE1-
RXE1+
RTD_G-
RTD_G+
RTD_R-
RTD_R+
R1.8DVCC
BJT_B
1K J
R91
GREEN1-
GREEN1+
RED1-
RED1+
RXE3+
RXE3-
RXE2+
RXE2-
RX2M
RX2P
TMDS_VDD
M512_XOUT
SCL_D
SDA_D
RTD_SCLK
RTD_SD3/SDI
R1.8DVCC
RXO0-
RXO0+
CRYSTAR_OUT
RTD_DDCSDA
RTD_SCLK
RTD_SD3/SDI
R1.8DVCC
DGND
RXO0-
RXO0+
Qisda Corporation
Project Code
9J.0NJ72.001
Model Name
G900HD
OEM/ODM Model Name
<OEM/ODM>
Title
INTERFACE BOARD
Size
<Size>
PCB P/N
4H.0NJ01.S02
PCB Rev.
S02
Document Number
9J.0NJ72.000-Q30-304-001
Rev.
1
Date: Thursday, May 22, 2008
Sheet 3 of 6
Prepared By
ANGEL HU
Reviewed By
TONY TC YU
Approved By
ALLEN PC LEE

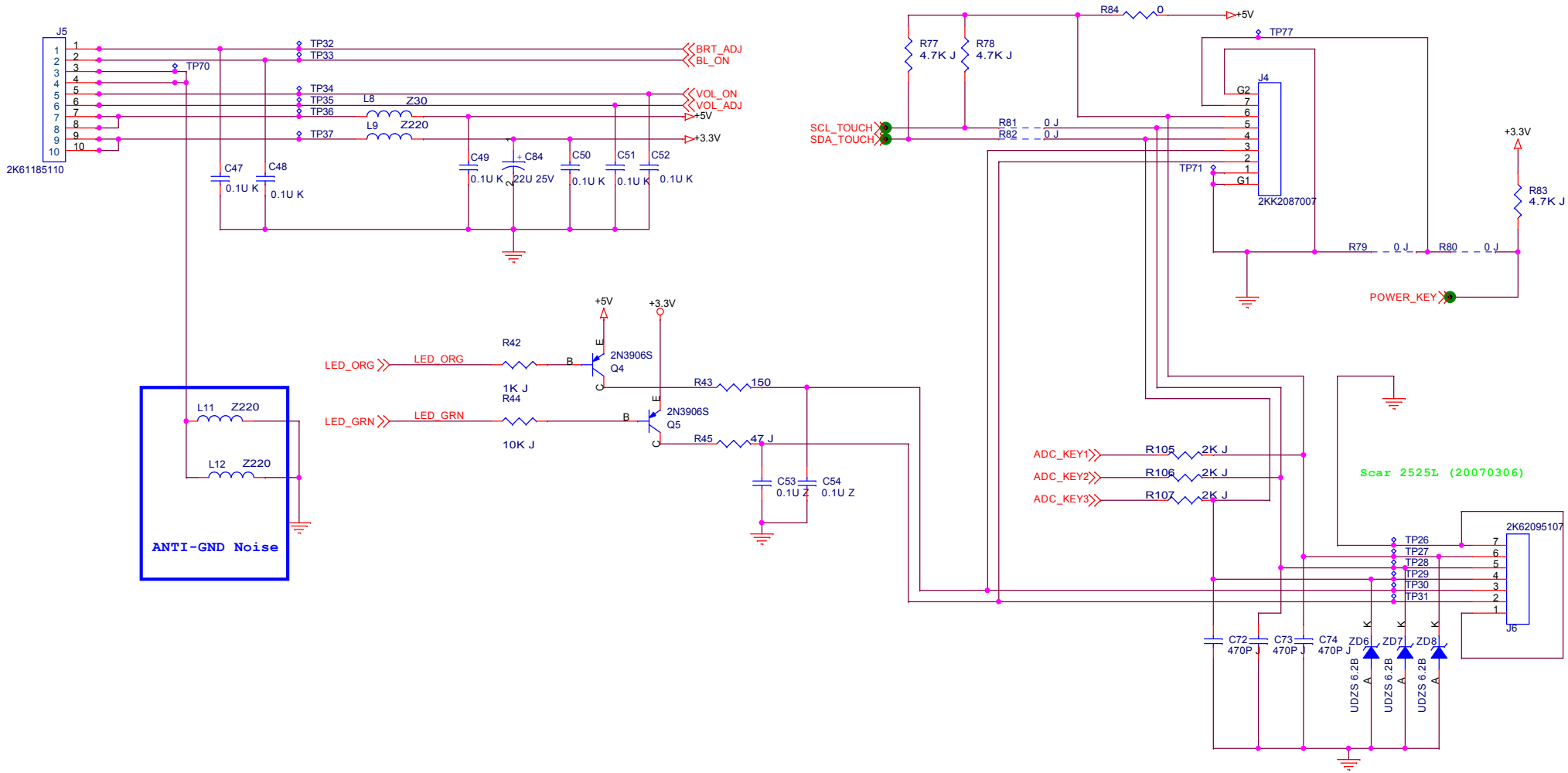

EMI Solution(Q7C5) : C72 ~ C74

giachin 2525L (0719)

R46, R47, R48, R49, R50, R51
ZD9, ZD10, ZD11, ZD12, ZD13, ZD14
C55,C56,C57,C58,C59,C60
J4
Open for ADC key

Qisda Corporation

Project Code	Model Name	OEM/ODM Model Name
9J.0NJ72.001	G900HD	<OEM/ODM>

Title: INTERFACE BOARD

Size	PCB P/N	PCB Rev.	Document Number	Rev.
<Size>	4H.0NJ01.S02	S02	9J.0NJ72.000-Q30-304-001	1

Date: Thursday, May 22, 2008 Sheet 4 of 6

Prepared By	Reviewed By	Approved By
ANGEL HU	TONY TC YU	ALLEN PC LEE

change RN1-RN5 to R200-R215 0724

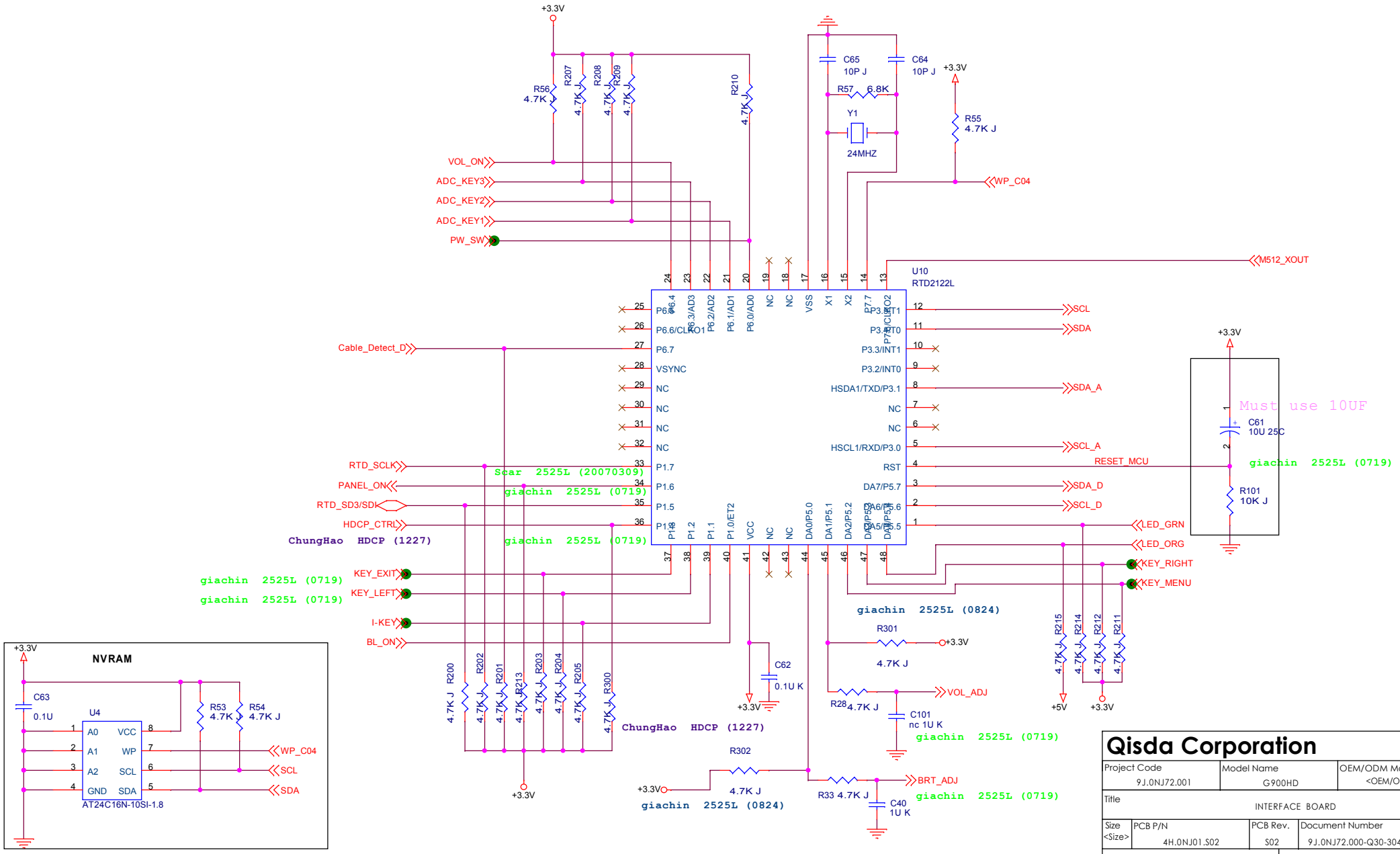

Qisda Corporation

Project Code	Model Name	OEM/ODM Model Name
9J.0NJ72.001	G900HD	<OEM/ODM>

Title: INTERFACE BOARD

Size	PCB P/N	PCB Rev.	Document Number	Rev.
<Size>	4H.0NJ01.S02	S02	9J.0NJ72.000-Q30-304-001	1

Date: Thursday, May 22, 2008 Sheet 5 of 6

Prepared By	Reviewed By	Approved By
ANGEL HU	TONY TC YU	ALLEN PC LEE

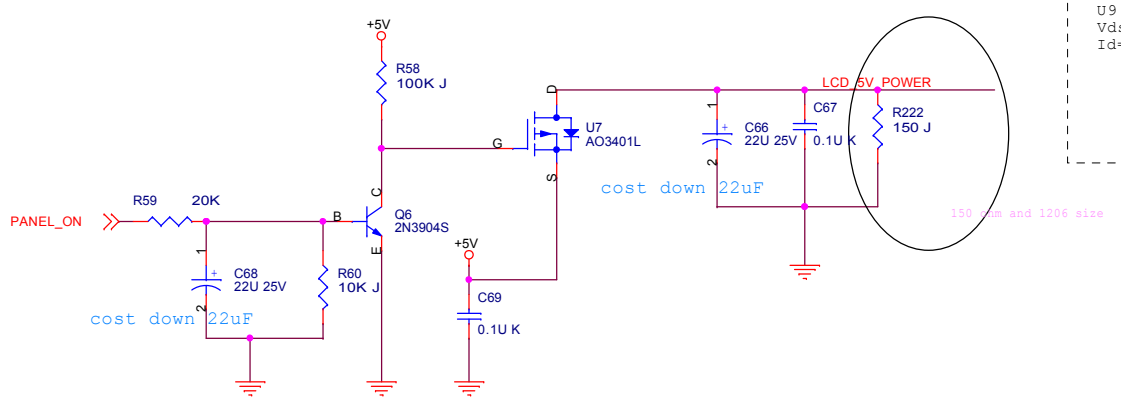

U9 spec.
Vds=-30V, Vgs=+/-12V
Id=-3.5A when ambient temp.=70 degre

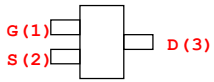

Screw Holes

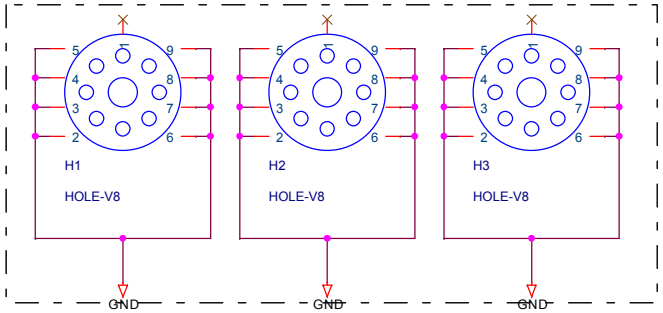

Optical Points

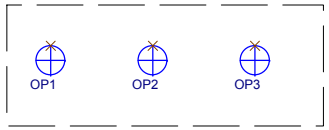

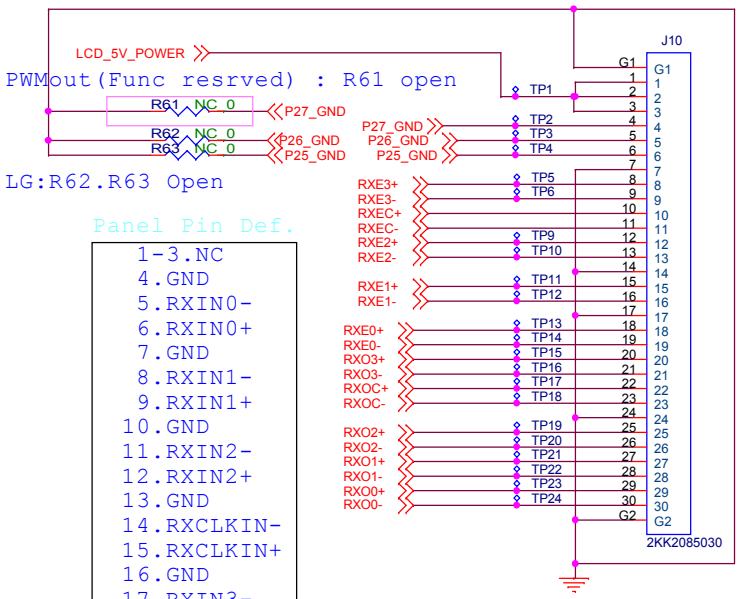

Panel Pin Def.

1-3.NC
4.GND
5.RXIN0-
6.RXIN0+
7.GND
8.RXIN1-
9.RXIN1+
10.GND
11.RXIN2-
12.RXIN2+
13.GND
14.RXCLKIN-
15.RXCLKIN+
16.GND
17.RXIN3-
18.RXIN3+
19.GND
20-22.NC
23-25.GND
26-30.VCC

Add wireharness connector for improving EMI issue. 0328

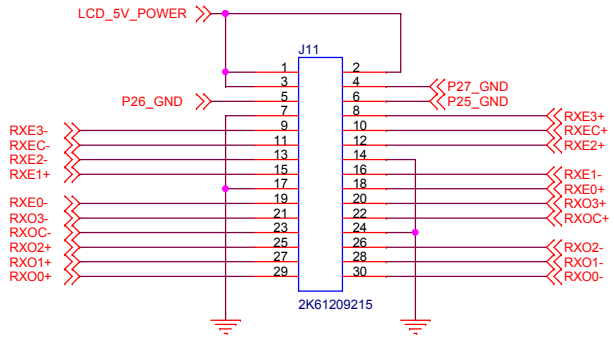

Qisda Corporation

Project Code	Model Name	OEM/ODM Model Name
9J.0NJ72.001	G900HD	<OEM/ODM>

Title: INTERFACE BOARD

Size	PCB P/N	PCB Rev.	Document Number	Rev.
<Size>	4H.0NJ01.S02	S02	9J.0NJ72.000-Q30-304-001	1

Date: Thursday, May 22, 2008 Sheet 6 of 6

Prepared By	Reviewed By	Approved By
ANGEL HU	TONY TC YU	ALLEN PC LEE