SANYO

FILE NO.

SERVICE MANUAL

LCD TV

LCD-46XZ10FH

PRODUCT CODE No.
1 682 349 56: PAL-BG(TV) DTV

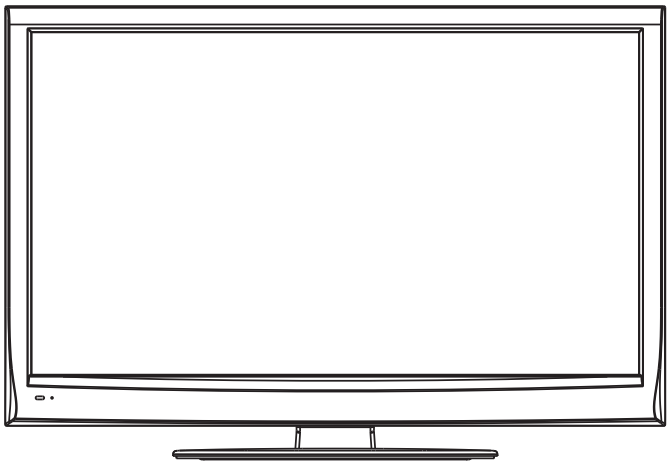

REFERENCE No.:SM0915098

Downloaded from www.Manualslib.com manuals search engine

CONTENTS

Safety precautions..... 3
Alignment instructions 5
Method of software upgrading..... 11
Working principle analysis of the unit..... 15
Block diagram..... 18
IC block diagram and instruction..... 19
Wiring diagram 23
Troubleshooting guide 24
Schematic diagram..... 27
APPENDIX-A: Main assembly list
APPENDIX-B: Exploded View
Assemble & Disassemble the Pedestal Base
Wall mounting instructions

Downloaded from www.Manualslib.com manuals search engine

Attention: This service manual is only for service personnel to take reference with. Before servicing please read the following points carefully.

Safety precautions

1. Instructions

Be sure to switch off the power supply before replacing or welding any components or inserting/plugging in connection wire Anti static measures to be taken (throughout the entire production process!):

a) Do not touch here and there by hand at will;

b) Be sure to use anti static electric iron;

c) It's a must for the welder to wear anti static gloves.

Please refer to the detailed list before replacing components that have special safety requirements. Do not change the specs and type at will.

2. Points for attention in servicing of LCD

2.1 Screens are different from one model to another and therefore not interchangeable. Be sure to use the screen of the original model for replacement.

2.2 The operation voltage of LCD screen is 700-825V. Be sure to take proper measures in protecting yourself and the machine when testing the system in the course of normal operation or right after the power is switched off. Please do not touch the circuit or the metal part of the module that is in operation mode. Relevant operation is possible only one minute after the power is switched off.

2.3 Do not use any adapter that is not identical with the TV set. Otherwise it will cause fire or damage to the set.

2.4 Never operate the set or do any installation work in bad environment such as wet bathroom, laundry, kitchen, or nearby fire source, heating equipment and devices or exposure to sunlight etc. Otherwise bad effect will result.

2.5 If any foreign substance such as water, liquid, metal slices or other matters happens to fall into the module, be sure to cut the power off immediately and do not move anything on the module lest it should cause fire or electric shock due to contact with the high voltage or short circuit.

2.6 Should there be smoke, abnormal smell or sound from the module, please shut the power off at once. Likewise, if the screen is not working after the power is on or in the course of operation, the power must be cut off immediately and no more operation is allowed under the same condition.

2.7 Do not pull out or plug in the connection wire when the module is in operation or just after the power is off because in this case relatively high voltage still remains in the capacitor of the driving circuit. Please wait at least one minute before the pulling out or plugging in the connection wire.

2.8 When operating or installing LCD please don't subject the LCD components to bending, twisting or extrusion, collision lest mishap should result.

2.9 As most of the circuitry in LCD TV set is composed of CMOS integrated circuits, it's necessary to pay attention to anti statics. Before servicing LCD TV make sure to take anti static measure and ensure full grounding for all the parts that have to be grounded.

2.10 There are lots of connection wires between parts behind the LCD screen. When servicing or moving the set please take care not to touch or scratch them. Once they are damaged the screen

Downloaded from www.Manualslib.com manuals search engine

would be unable to work and no way to get it repaired.
If the connection wires, connections or components fixed by the thermotropic glue need to disengage when service, please soak the thermotropic glue into the alcohol and then pull them out in case of dagmage.
2.11 Special care must be taken in transporting or handling it. Exquisite shock vibration may lead to breakage of screen glass or damage to driving circuit. Therefore it must be packed in a strong case before the transportation or handling.
2.12 For the storage make sure to put it in a place where the environment can be controlled so as to prevent the temperature and humidity from exceeding the limits as specified in the manual. For prolonged storage, it is necessary to house it in an anti-moisture bag and put them altogether in one place. The ambient conditions are tabulated as follows:

Temperature	Scope for operation	5 ~ +35 °C
	Scope for storage	-15~ +45 °C
Humidity	Scope for operation	20% ~ 80%
	Scope for storage	<= 80%

2.13 Display of a fixed picture for a long time may result in appearance of picture residue on the screen, as commonly called “ghost shadow”. The extent of the residual picture varies with the maker of LCD screen. This phenomenon doesn’t represent failure. This “ghost shadow” may remain in the picture for a period of time (several minutes). But when operating it please avoid displaying still picture in high brightness for a long time.

3. Points for attention during installation

3.1 The front panel of LCD screen is of glass. When installing it please make sure to put it in place.
3.2 For service or installation it’s necessary to use specified screw lest it should damage the screen.
3.3 Be sure to take anti dust measures. Any foreign substance that happens to fall down between the screen and the glass will affect the receiving and viewing effect
3.4 When dismantling or mounting the protective partition plate that is used for anti vibration and insulation please take care to keep it in intactness so as to avoid hidden trouble.
3.5 Be sure to protect the cabinet from damage or scratch during service, dismantling or mounting.

Downloaded from www.Manualslib.com manuals search engine

Alignment instructions

Test equipment

VG-848 (VGA, YPbPr signal generator)
VG-849 (HDMI digital video signal generator)
CA210 (color analyzer)

1 Alignment flow

1.1 Voltage of power supply test

According to the wiring diagram “9232KE6302JL”, connect power board, digital board, IR board correctly; then power on and press key “standby” .

a) Test voltage of socket X801 each pin in turn listed as **Table 1.**

Table 1 Voltage of X801 each pin

X801	Pin1	2	3	4	5	6	7 、8	9 、10	11	12	13
Voltage	>2.5 V	0	4.85 V ～ 5.35 V	0	4.85 V ～ 5.35 V	8.55 V～ 9.45 V	0	11.4 V ～ 12.6 V	0	3.2V～ 3.4V	4.9V～ 5.1V

b) Test voltage of socket XV03 each pin in turn listed as **Table 2.**

Table 2 Voltage of XV03 each pin

XV03	Pin1、2	3、4、5
Voltage	23.8 V～25.2 V	0

Downloaded from www.Manualslib.com manuals search engine

1.2 Adjustment flow chart as **Fig.1**

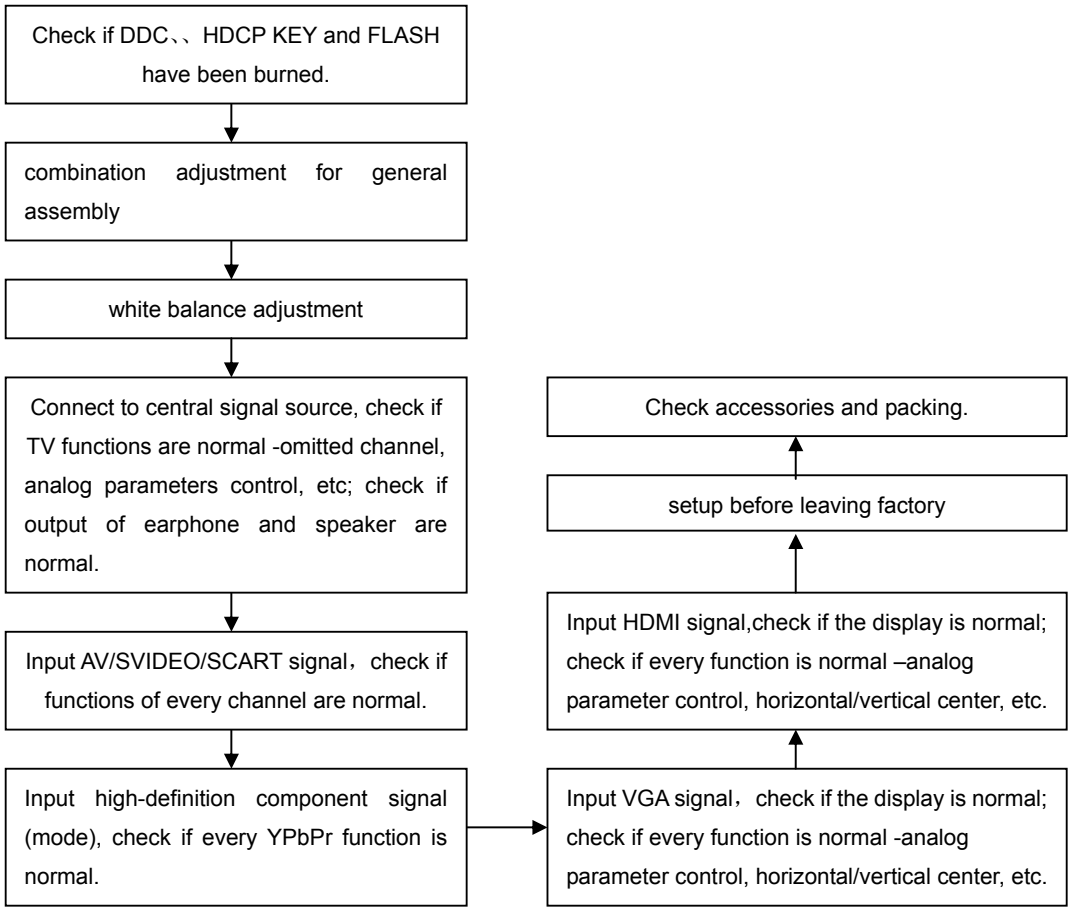

Fig.1 Adjustment flow chart

2 Alignment instruction

2.1 Unit adjustment

2.1.1 According to the wiring diagram “9232KE5201JL”, connect power board, main board, IR board, key board correctly; then power on, check if the display is normal.

2.1.2 Using method of factory menu

a) First press key “**SOURCE**”，then press number key “**2**、**5**、**8**、**0**” in turn to enter into initial factory menu;

b) Press keys “CH+” and “CH−” can move cursor to each page of initial factory menu, then press key “**OK**” can enter into adjustment menu of each page;

c) Press keys “CH+” and “CH−” can move cursor upwards and downwards within one adjustment page;

d) Move cursor to one adjustment item, then press keys “VOL−” and “VOL+” can adjust it;

e) Press key “**MENU**” can exit adjustment menu of one page to its superior factory menu;

f) Press key “**EXIT**” can exit factory menu at any time;

g) Press key “**OK**” can enter into inferior factory menu;

Downloaded from www.Manualslib.com manuals search engine

h) Factory menu item “**ADC Calibrate”** is used to correct ADC of VGA and Component channel;

i) Factory menu item “**W/B ADJUST”** is used to adjust white balance;

j) Factory menu item “**POWER MODE**” is used to set power-on mode, “Standby” means the set will be in standby state after power-on; “MEM” means the set will be in the state before the last power-off; “ForceOn” means the set will be working automatically after power-on, this mode is also used for factory-machine-aging; default setting should be “Standby” mode unless specified by customer requirement;

k) Factory menu item “**ISP MODE**” is used to upgrade unit software from VGA port when the item is set as “ON” and the set is connected to ISP adjustment equipment; DDC function of VGA port will be recovered when the item is set as “OFF”; the value of the item can not be kept in the memory, that is to say the item is reset as “OFF” after power-on again;

l) Factory menu item “**RESET ALL”** is used to reset factory menu data and user menu data; after execute the item, the set will be started up again and the startup guided picture will be displayed;

m) Factory menu item “**FACTORY CHANNEL PRESET”** is used to preset factory programs data; it is necessary to connect to central signal source for DTV searching programs. Now digital frequency of central signal CH28(529.5 MHz) and CH33(564.5 MHz) are distributed to Australia programs. Primary preset programs would not be modified along with the changing of central signals, so please select item DTV in menu Channel to manual search digital programs, the process will spend about 15s;

n) Factory menu item “**CUSTOM CHANNEL PRESET”** : first delete all DTV/ATV programs for factory adjustment, then preset ATV channel data according to customer order requirements; please execute the item to clear out all programs for factory adjustment before leaving factory;

o) Factory menu item “**MST Debug**” :default setting “OFF” is used for engineering models whose RS232 functions can measure up to design specifications; setting “ON” is convenient for debugging by developing tools; the value of the item can not be kept in the memory, that is to say the item is reset as “OFF” after power-on again;

p) Factory menu item “**BACKLIGHT**” is used to adjust backlight brightness, adjust the item and test voltage of X801-12# (PWM) to measure up to the maximum PWM voltage in panel specification;

q) Factory menu item “**SSC ADJUST**” is used to adjust expended functions of frequency content, the software having been preset according to model need not be adjusted again;

r) Factory menu item “**AUDIO Curve**” is used to adjust audio curve; without special customer requirements, the software having been preset according to model need not be adjusted again;

If the software has been upgraded or EEPROM has data already, please execute item “RESET ALL” before adjustment for the first time.

2.1.3 ADC calibration

ADC calibration of VGA channel

a) Switch to VGA channel;

b) Press key “**SOURCE**”, then press number keys “**2、5、8、0**” to enter into initial factory menu;

c) Move cursor to item “**ADC ADJUST**” and press key “**OK**” to enter into interior factory menu;

d) Input VGA signal (**VG-848 Timing:856(1024×768/60 Hz)，Pattern 920 Gray 8 step(H)**),

Downloaded from www.Manualslib.com manuals search engine

move cursor to item “**MODE**”，press keys “▲” and “▼” to select item “RGB”, then move cursor to item “**AUTO ADC**” and press key “OK” to begin adjustment automatically until adjustment completion.

ADC calibration of YPbPr channel

a) Switch to YPbPr channel;
b) Press key “**SOURCE**”，then press number keys “**2、5、8、0**” to enter into initial factory menu;
c) Move cursor to item “**ADC ADJUST**” and press key “**OK**” to enter into interior factory menu;
d) Input YPbPr signal (**VG848 Timing 976（720P）,Pattern 918 SMPTE Color Bar**), move cursor to item “**MODE**”，press keys “▲” and “▼” to select item “**YPbPr（HD）**”, then move cursor to item “**AUTO ADC**” and press key “**ENTER**” to begin adjustment automatically, a prompt “**success**” displayed under “**AUTO ADC**” means auto-adjustment completed successfully;
e) Input YPbPr signal (**VG848 Timing 968（408I）,Pattern 918 SMPTE Color Bar**), move cursor to item “**MODE**”，press keys “▲” and “▼” to select item “**YPbPr（SD）**”, then move cursor to item “**AUTO ADC**” and press key “**ENTER**” to begin adjustment automatically, a prompt “**success**” displayed under “**AUTO ADC**” means auto-adjustment completed successfully;

2.2 White balance adjustment

Unless specified by customer, default COOL color temperature is **12000K**, chromaticity coordinates is （**272、278**）； default Normal color temperature is **9300K**, chromaticity coordinates is（**285、293**）； default Warm color temperature is **6500K**， chromaticity coordinates is （**323、329**）.

2.3 White balance adjustment processes

The set should be working above **30** minutes before white balance adjustment for it would be in a stabler state. Use white balance apparatus **CA-210** and switch to any channel have checked.

a) Switch to **HDMI** channel；
b) Press key “**SOURCE**”, then press number keys “**2、5、8、0**” in turn to enter into initial factory menu;
c) Move to item “**W/B ADJUST**” and press key “**OK**” to enter into interior factory menu;
d) Input **DVI/HDMI** signal （**VG-848 Timing: 856(1024×768/60 Hz)，Pattern:921 16 step Gray**）, move cursor to item “**MODE**”, press keys “▲” and “▼” to select item “**HDMI1**” or other HDMI channels, then move cursor to item “**TEMPERTURE**”, press keys “▲” and “▼” to select item “**COOL**”;
e) Adjust items “**R GAIN、G GAIN、B GAIN”** to set chromaticity coordinates of the **14th** step is （**272、278**）;
f) Adjust item “**R Offset、G Offset、B Offset**” to set chromaticity coordinates of the **4th** step is （**272、278**）;
g) During adjustment , make sure that color temperature of bright step is (**X=272±10 Y=278±10)** and color temperature of dark step is (**X=272±10 Y=278±10)**;
h) Then move cursor to item “**COPY ALL**” to copy white balance data to the other channels except DTV channel;
i) Check if color temperature of **HDMI NORMAL** and **WARM** meet requirements as below:
bright step: allowable error is **±10**, dark step: allowable error is **±10**;
otherwise adjust items “**R_GAIN /B_GAIN/R_OFF/B_OFF**” to meet requirements and then save data;

Downloaded from www.Manualslib.com manuals search engine

j) Switch to other channels **ATV, AV，COMPONENT and D-SUB** , check if color temperature of **COOL**，**NORMAL** and **WARM** meet requirements; otherwise adjust them respectively with **16 step Gray** signal and the same adjustment method as **HDMI** channel's; exit menu "**W/B ADJUST**" after adjustment and the data would be saved automatically;

k) DTV channel adjustment: switch to DTV channel, input **16 step Gray** signal, enter into factory menu, then begin adjustment followed by steps "e, f, g";

l) Adjustment rules for reference as below:

adjust **B** gun: adjust **B** gun value downwards , then coordinates of **X**、**Y** will rise;
adjust **B** gun value upwards , then coordinates of **X**、**Y** will descent;

adjust **R** gun will effect the coordinate of **X** , and effect the value of **Lv** a little:
adjust **R** gun value upwards , then coordinate of **X** will rise;
adjust **R** gun value downwards , then coordinate of **X** will descent;

adjust **G** gun will effect the coordinate of **Y** , and effect the value of **Lv** a lot:
adjust **G** gun value upwards , then coordinate of **Y** will rise;
adjust **G** gun value downwards , then coordinate of **Y** will descent;

note: default color temperature for **SANYO** customer is **Normal**; change to picture mode **Dynamic**, adjust chromaticity coordinates of color temperature **Normal** and **Cool**;
only adjust chromaticity coordinates of color temperature **Cool** for other customers when picture mode is **Dynamic**.

3 Performance check

3.1 **TV** functions

Connect **RF** port to central signal source, first enter into menu **CHANNEL**, then search programs automatically, check if there is any omitted program, check if the output of speakers is normal, check if the picture is normal.

3.2 **AV/S-Video** port

Input **AV/S-Video** signal respectively, check if the picture, the sound and other functions are normal;

3.3 **VGA** port

Input **VGA** signal from signal generator **VG-848** with **VGA** formats as **Table 5** respectively, check if the display and the sound are normal; if there is any deviation of line or field, enter into **main** menu, select and execute items "**Picture->Screen->Auto Adjusting**" in turn to correct them automatically.

Downloaded from www.Manualslib.com manuals search engine

Table 5 VGA receiving signal formats

No.	Definition	Horizontal frequency （kHz）	Vertical frequenvy （Hz）	Dot-pulse frequency （MHz）	Remark
1	640×480	31.469	59.94	25.175	IBM
2	720×400	31.469	70.086	28.322	IBM
3	640×480	37.861	72.809	31.5	VESA
4	640×480	37.5	75	31.5	VESA
5	800×600	35.156	56.25	36	VESA
6	800×600	37.879	60.317	40	VESA
7	800×600	48.077	72.188	50	VESA
8	800×600	46.875	75	49.5	VESA
9	1024×768	48.363	60.004	65	VESA
10	1024×768	56.476	70.069	75	VESA
11	1024×768	60.023	75.029	78.75	VESA
12	1152×864	67.5	75	108	VESA
13	1280×960	60	60	108	VESA
14	1280×1024	63.98	60.02	108	VESA
15	1280×1024	80	75	135	SXGA
16	1440×900	-	60	-	-
17	1680×1050	-	60	-	-
18	1360×768	47.7	60	85.5	-

3.4 **HDMI** port

Input **HDMI** signal from signal generator **VG-849** with the formats as **Table 4** and **Table 5** respectively, check if the display and the sound（**32 KHz**、**44.1 KHz**、**48 KHz**）are normal under the circumstances of power-on/off, switching channel, switching signal format, etc.

3.5 Other functions check

a) Check if the functions are normal —timing turn-on/off、turn-off of sleeping time、picture/sound mode、OSD、stereo and digital audio interface, etc.;

b) Check if audio only digital programs (**RADIO**) are normal;

c) For **UK** models, check if **MHEG** function of digital programs are normal;

d) Check if common interface（**CI**：**Common Interface**）is normal;

e) For **New Zealand** models, check if function of logic channel number (**LCN**) is normal, check if function of **Over Air Download**（**OAD**）is normal;

f) For **France**, **UK** and **Italy** models, check if function of logic channel number (**LCN**) is normal.

Downloaded from www.Manualslib.com manuals search engine

4 User menu setup before leaving factory

Enter into page **"LOCK**" of user menu, select submenu item "**Restore Factory Default**" to preset items before leaving factory as below:

a) Clear out all programs information;
b) Clear out information of parental control (**VCHIP**);
c) Default setup of user analog data;
d) Set Menu Language as **English**;
e) Set Power on MODE as **Off**.

Method of software upgrading

Instruction of factory software burning as **Table 6**

Table 6 Instruction of factory software burning

No.	Part No.	Part type	Instruction of software function	Burned before SMT	Burning method
N111	5272564002	EN25Q64-104HIP	FLASH	Yes	burned with program **ALL11**, write-protect setup, refer to **Note 1** in detail
N108	5272404002	AT24C04	HDMI KEY	Yes	burned with program **ALL11**
NA04	5272402002	AT24C02	HDMI EDID	Yes	burned with program **ALL11**
NA05	5272402002	AT24C02	HDMI EDID	Yes	burned with program **ALL11**
NA06	5272402002	AT24C02	HDMI EDID (supporting the 3rd HDMI)	Yes	burned with program **ALL11**
N106	5272402002	AT24C02	VGA EDID	Yes	burned with program **ALL11**

Note 1: Write-protect setup method

Enter into burning interface of program **ALL-100**, select item "**Config**", press item "**config Setting"**, set item "**Protect**" as "**All Protect**"; be sure to select item "**Config**" before burning software, and write-protect must be re-set after burning program **ALL-100** startup every time.

Note 2: Burning and upgrading software method with burning tool **ISP**

Downloaded from www.Manualslib.com manuals search engine

1） Main board upgrading: connect the cable of burning tool **ISP** to Debug port（location No. **X807**） of main board;

Unit upgrading: connect both **VGA** ports between burning tool **ISP** and main board, then enter into factory menu and set item **"ISP Mode**" as "**ON"**;

2） Use on-line burning tool of **Mstar**, enter into menu "**Device**", select item "**WP Pin pull to high during ISP**" as **Fig. 2**; for the normal erasing process, make sure hardware write-protect of **Flash** is canceled;

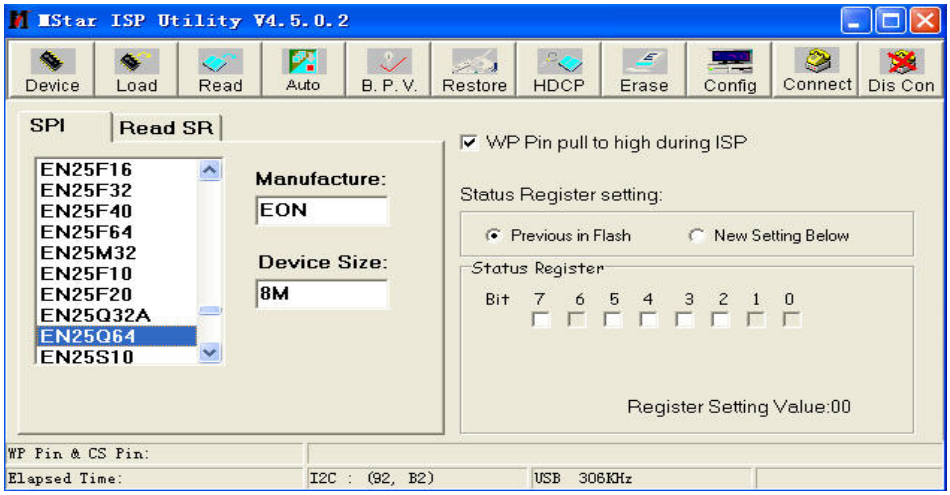

Fig. 2 Write-protect setup

3) Select menu "**Connect**", a dialog "**Device Type is EN25Q64**" will be displayed as **Fig. 3** , that is

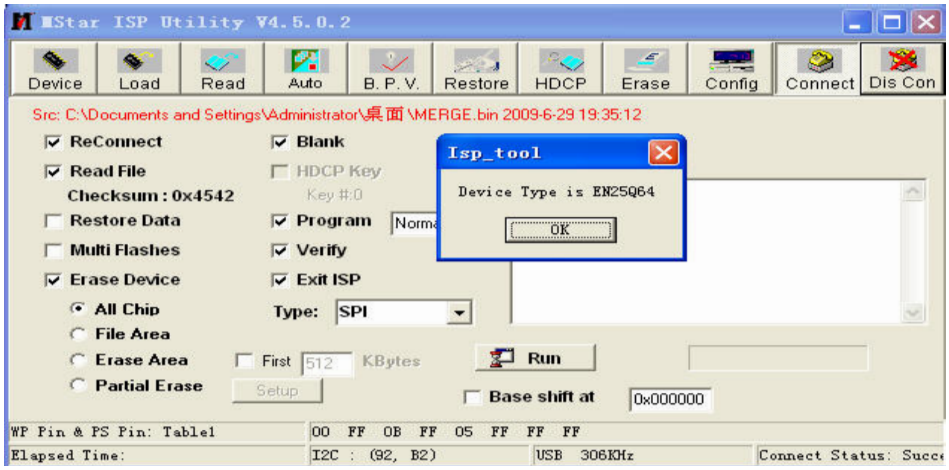

Fig. 3 Device **EN25Q64** successful connection

If failing to connecting, select the first menu "**Device**" and select item "**EN25Q64**" manually, then press key "**Connect**".

Downloaded from www.Manualslib.com manuals search engine

4) Press key “**Read**”，select burning file (for example **MERGE.bin**) as **Fig. 4.**

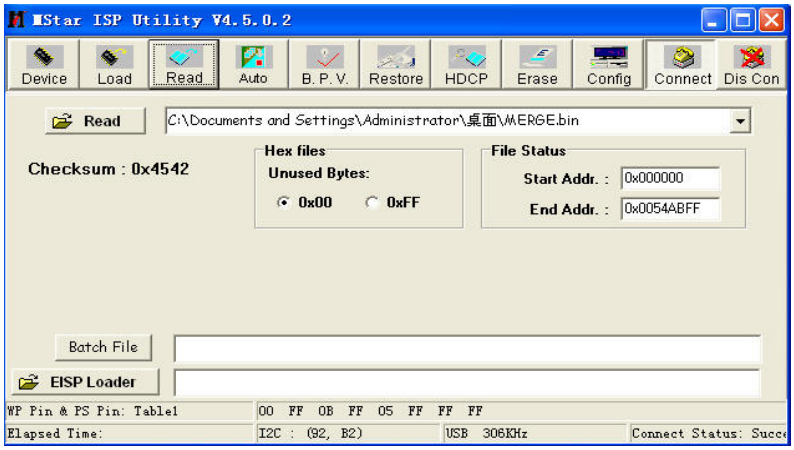

Fig. 4 Burning file

5) Select menu “**Auto**”, then select items “**All chip**”, “**program**” and other configuration as **Fig. 5**

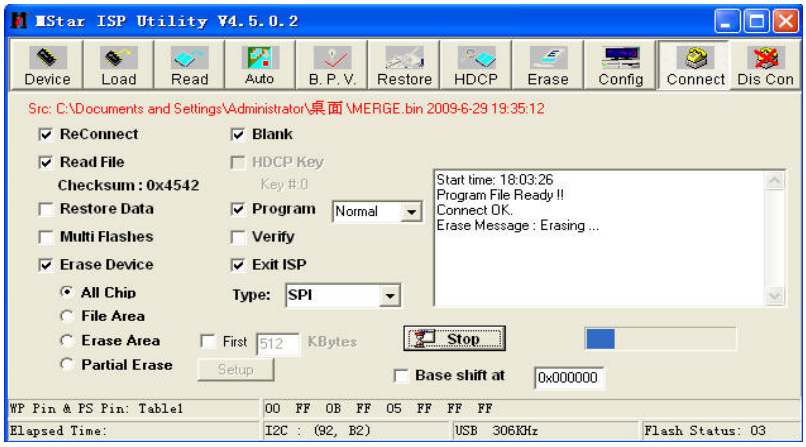

Fig. 5 Burning Configuration

6) Press key “**Run**” as **Fig. 4** to begin burning software, there are two steps for the process: **Erase** and **Program**

normal burning steps are as follows:

the first step “**Erasing…，Flash Status: 03**” will be lasting for a moment, otherwise skipping over means unsuccessful erasing; please confirm process （**2**） and then burn software again;

the following step “**Programming…，Flash Status:00**” will be done until a prompt “**Pass**” is displayed.

Downloaded from www.Manualslib.com manuals search engine

7) A prompt “**Pass**” will be displayed beside the key “**Run**” for successful burning as **Fig. 6**

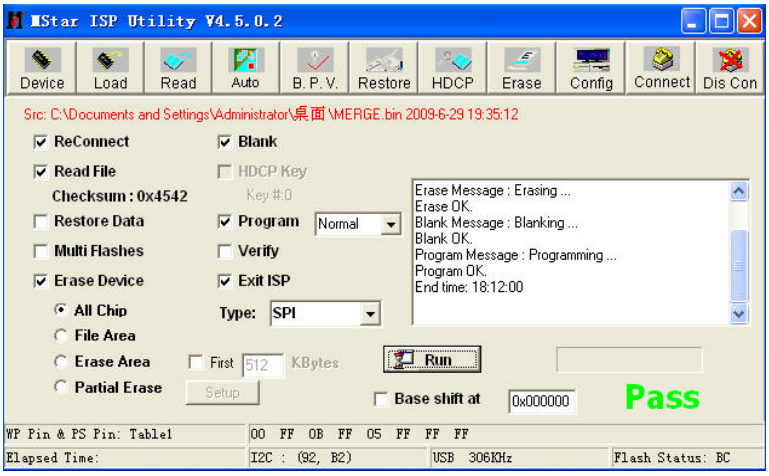

Fig. 6 A prompt “**Pass**” beside the key “**Run**” for successful burning

8) Need not exit **ISP** burning interface and only repeat the process **3**）and **5**）to go on burning software for other sets.

Note 3: On-line burning and upgrading method from **USB** port

1） Be sure to format a U disk as **FAT32**;

2） Copy program file to the U disk with the name “**Merge.bin**”;

3） Power on, be sure to switch to **ATV** or **DTV** channel and not to display **OSD** interface; insert the U disk into a **USB** port, then **USB** upgrading process will begin automatically;

4） Upgrading processes:

A、Reading data from the U disk:

A prompt “Searching USB” is displayed and an indicating light of U disk is twinkling;

B、Burning Flash:

A prompt “Updating! Please don’t power off!!!” is displayed and an indicating bar is showing upgrading schedule; the set will be in Standby mode after the burning process completed;

5） Start up the set again, enter into factory menu to verify software version and time parameters; then execute item “**RESET ALL**” to complete the whole burning process.

******* Method of burning from **USB** could not be sure to be suitable for all kinds of U disks, so please try other U disks if necessary.

Downloaded from www.Manualslib.com manuals search engine

Working principle analysis of the unit

1、 PAL/SECAM signal flow

PAL/SECAM signal from antenna is inputted into TUNER **FQD1116** which is an analog-digital-integrative model, the analog RF signal is demodulated by the TUNER, then **CVBS** signal and SIF(sound intermediate frequency) signal are outputted. TUNER **FQD1116** is controlled by main chip **MSD209**（with embedded CPU) through **I2C** bus.

TV CVBS signal is inputted into main chip **MSD209** directly to be processed by modules "**VIDEO DECODER**、**DEINTERLACE** and **SCALER**", then **LVDS** signal is outputted to drive LCD panel.

SIF audio signal is inputted into main chip **MSD209** directly and processed by modules of demodulation, pre-amplification, acoustic effect processing and volume control, then the audio signal are inputted into left and right sound tracks of earphone amplifier **BH3547F** to be amplified and then are divided to two signals, one is outputted to earphone jack, the other is inputted into class D audio power amplifier **R2A15112** to be amplified and then be outputted to speakers.

2、 DVB-T signal flow

DVB-T signal from antenna is inputted into TUNER **FQD1116** to be tuned, **RF** amplified, **IF** amplified and **SAW FILTER** inside, then **IF** signal is outputted to demodulating chip **CE6353** to be demodulated and then be inputted into main chip **MSD209** with format of standard serial or parallel **TS** stream for demultiplexing and decoding.

Video route: demultiplexed video signal is decoded by main chip **MSD209** and then digital video signal is outputted; in the end **LVDS** signal is outputted to drive **LCD** panel after a series of digital processes and **OSD** addition within main chip **MSD209**.

Audio route: demultiplexed audio signal is decoded into **Dolby AC-3** signal or **MPEG** multi-sound-track digital audio signal by inner decoder of main chip **MSD209**, then one is outputted through **SPDIF** directly; after the process of "sub-transform and **DAC**", the other is outputted as analog audio signal, the analog audio signal is inputted into the rear part of main chip **MSD209** for acoustic effect processing and volume control, then inputted into left and right sound tracks of earphone amplifier **BH3547F** respectively to be amplified, now the audio signal is divided into two, one is outputted to earphone jack directly, the other is inputted into class D audio power amplifier **R2A15112** to be amplified and then outputted to speakers.

3、 AV signal flow

After processed by impedance matching, **AV** video signal is inputted into main chip **MSD209** directly and processed by modules of "**VIDEO DECODER**、**DEINTERLACE** and **SCALER**", then **LVDS** signal is outputted to drive **LCD** panel.

AV audio signal is processed by circuits of "voltage divided, impedance matching and AC coupling", then inputted into main chip **MSD209** directlyfor acoustic effect processing and volume control, then inputted into left and right sound tracks of earphone amplifier **BH3547F** respectively to be

Downloaded from www.Manualslib.com manuals search engine

amplified, now the audio signal is divided into two, one is outputted to earphone jack directly, the other is inputted into class D audio power amplifier **R2A15112** to be amplified and then outputted to speakers.

4、 **PC/YPbPr** signal flow

After processed by impedance matching, **PC/YPbPr** video signal is inputted into main chip **MSD209** to be processed by modules of "**A/D** transform, digital video processing and **OSD** addition", then **LVDS** signal is outputted to drive **LCD** panel.

PC/YPbPr audio signal is processed by circuits of "voltage divided, impedance matching and AC coupling", then inputted into main chip **MSD209** directly for acoustic effect processing and volume control, afterwards the audio signal is inputted into left and right sound tracks of earphone amplifier **BH3547F** directly to be amplified, now the audio signal is divided into two, one is outputted to earphone jack directly, the other is inputted into class D audio power amplifier **R2A15112** to be amplified and then outputted to speakers.

5、 **HDMI** signal flow

HDMI video signal is inputted into main chip **MSD209** to be processed by modules of "digital video processing and **OSD** addition", then **LVDS** signal is outputted to drive **LCD** panel.

HDMI audio signal is decoded into **Dolby AC-3** signal or **MPEG** multi-sound-track digital audio signal by inner decoder of main chip **MSD209**, then one is outputted through **SPDIF** directly; after the process of "sub-transform and **DAC**", the other is outputted as analog audio signal, the analog audio signal is inputted into the rear part of main chip **MSD209** for acoustic effect processing and volume control, then inputted into left and right sound tracks of earphone amplifier **BH3547F** respectively to be amplified, now the audio signal is divided into two, one is outputted to earphone jack directly, the other is inputted into class D audio power amplifier **R2A15112** to be amplified and then outputted to speakers.

6、 Brief instruction on unit functions

MPEG-2 MP@HL、H.264 Main and High profile up to Leve4.0 Decoding
MPEG、Dolby Digital（AC-3）、AAC Digital Audio Decoding
3D comb filter
Wide-range power supply、low consumed power in standby mode（≤1W）
Class D audio power amplifier with HI-FI acoustic effect output
High quality transformation from interleaved scanning to progressive scanning
Realizing integrative functions really
- build integration
- integrative TUNER（integrating analog with digital）
- integrative searching-program function
- integrative OSD interface

Main parts of the unit：
46 inch LCD panel（1920X1080）

Downloaded from www.Manualslib.com manuals search engine

Main chip：MStar MSD209FG-LF
Demodulating chip：Intel CE6353
TUNER：NXP FQD1116ME/IV
DDR：SAMSUNG K4T51163QC-HCF7
Class D audio power amplifier：RENESAS R2A15112
FLASH ：EN25Q64-104HIP

External ports of the unit:

Two groups of Video input and RCA L/R input
One group of S-VIDEO input
Three groups of HDMI input
One group of VGA input
One group of audio input for VGA and DVI（Mini Phone Jack）
Two groups of YPBPR input and RCA L/R input
One group of RF
One group of RS232（Mini Phone Jack）
One group of audio output（Mini Phone Jack）
One group of Video output and RCA L/R output
One group of SPDIF（coaxial）output
One group of USB（for upgrading）

Downloaded from www.Manualslib.com manuals search engine

Block diagram

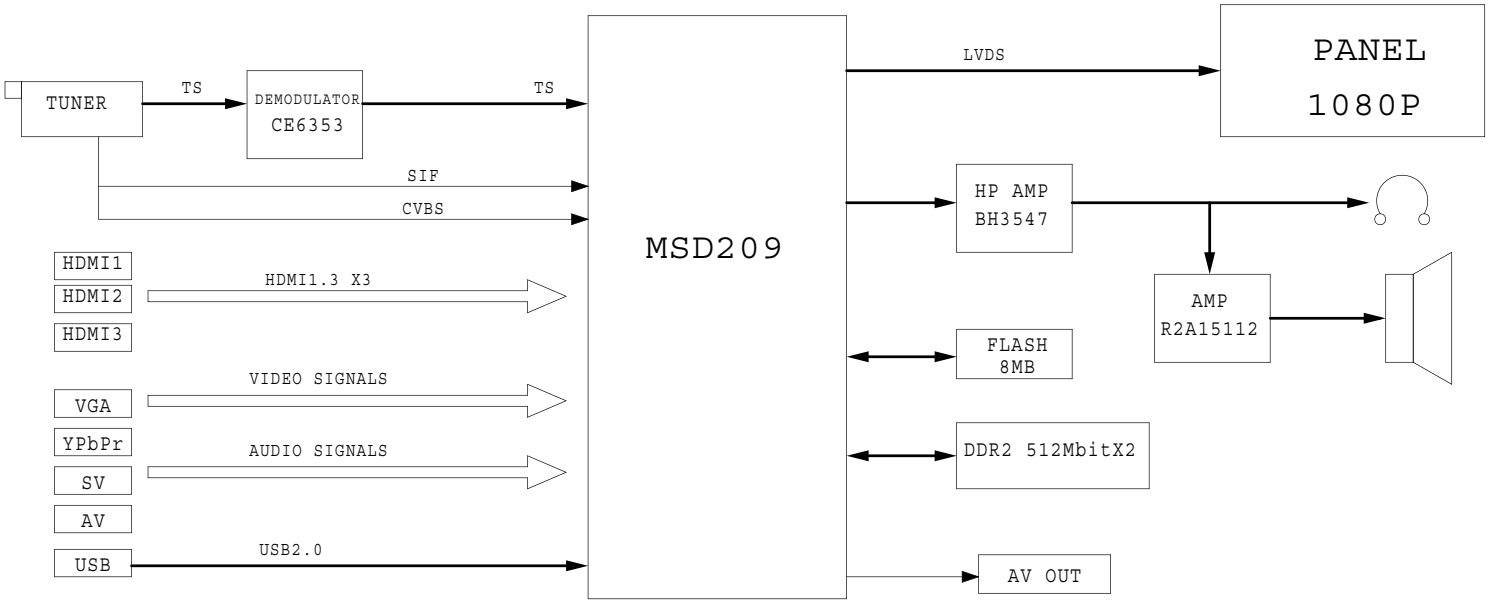

Downloaded from www.Manualslib.com manuals search engine

IC block diagram and instruction

1、 Main chip **MSD209FG-LF:**

GENERAL DESCRIPTION

The MSD209FG is a highly integrated controller IC for LCD/PDP DTV applications with resolutions up to full-HD (1920 x 1080). It is configured with an integrated triple-ADC/PLL, a multi-standard TV video and audio decoder, a motion adaptive video de-interlacer, a scaling engine, the MStarACE-3 color engine, an advanced 2D graphics engine, a transport processor, a high-definition (HD) MPEG video decoder, a 24-bit DSP for MPEG audio decoding, a DVI/HDCP/HDMI receiver, and a peripheral control unit providing a variety of HDTV control functions.

For digital TV application, the MSD209FG comprises an MPEG-2 transport processor with advanced section filtering capability, an MPEG-2 (MP@HL profile) video decoder, an MPEG layer I and II digital audio decoder with analog audio outputs that are designed to support existing and future DVB-T programs while handling conditional access. Furthermore, it is also possible to decode MPEG-4, JPEG, MP3 formats from external sources such as USB interfaces.

For analog TV, the MSD209FG includes NTSC/PAL/SECAM multi-standard video decoder comprising a 3-D motion adaptive comb filter and time-based correction, and a NICAM/A2 audio decoder to support worldwide television standards. The MSD209FG is also configured with a VBI processor to decode digital information such as Close Caption / V-chip / teletext / WSS / CGMS-A / VPS. In addition, the MStar advanced LCD TV processor enhances video quality, motion adaptive de-interlacer, picture quality adjustment units, and MStarACE-3 color engine.

By integrating peripherals including two USB 2.0 host controllers, UARTs, IR, SPI, I2C, and PWM, the MSD209FG fulfills all requirements in advanced DTV sets. To further reduce system costs, the MSD209FG also integrates intelligent power management control capability for green-mode requirements and spread-spectrum support for EMI management.

MSD209FG Features：

. Analog RGB Compliant Input Ports

˜ Three analog ports support up to 1080P

˜ Supports PC RGB input up to SXGA@75Hz

˜ Supports HDTV RGB/YPbPr/YCbCr

˜ Supports Composite Sync and SOG (Sync-on-Green) separator

˜ Automatic color calibration

. VIF Input Support

˜ Multi-standard analog TV receiver applications

˜ Digital low IF architecture

Downloaded from www.Manualslib.com manuals search engine

- Stepped-gain PGA with 25 dB tuning range and 1 dB tuning resolution
- Maximum IF gain of 37 dB
- Programmable TOP to accommodate different tuner gain to optimize noise and linearity performance

. DVI/HDCP/HDMI Compliant Input Port

- Three DVI/HDCP/HDMI input ports support up to 225MHz @ 1080P 60Hz with 12-bit deep-color resolution
- Single link on-chip DVI 1.0 compliant receiver
- High-bandwidth Digital Content Protection (HDCP) 1.1 compliant receiver
- High Definition Multimedia Interface (HDMI) 1.3 compliant receiver with CEC (Consumer Electronics Control) support
- Long-cable tolerant robust receiving

. High-Performance Scaling Engine

- Fully Programmable shrink/zoom capabilities
- Nonlinear video scaling supports various modes including Panorama

. Auto-Configuration/Auto-Detection

- Auto input signal format and mode detection
- Auto-tuning function including phasing, positioning, offset, gain, and jitter detection
- Sync Detection for H/V Sync

. Video Processing & Conversion

- 3-D motion adaptive video de-interlacers with edge-oriented adaptive algorithm for smooth low-angle edges
- Automatic 3:2 pull-down & 2:2 pull-down detection and recovery
- MStar 3rd Generation Advanced Color Engine (MStarACE-3) automatic picture enhancement gives:
- Brilliant and fresh color
- Intensified contrast and details
- Vivid skin tone
- Sharp edge
- Enhanced depth of field perception
- Accurate and independent color control
- sRGB compliance allows end-user to experience the same colors as viewed on CRTs and other displays
- 10-bit internal data processing
- Programmable 12-bit RGB gamma CLUT
- 3-D video noise reduction
- MPEG artifact removal including de-blocking and mosquito noise reduction
- Frame rate conversion
- MFC (Motion Frame Conversion) supports:
- Judder-free motion video
- Output frame rate 50/60/100/120 f/sec
- Up to 60Hz full HD or 120Hz HD panels

. Output Interface

Downloaded from www.Manualslib.com manuals search engine

˜ Supports up to 10-bit dual LVDS full-HD (1920 x 1080) panel interface
˜ Supports 2 data output formats: Thine & TI data mappings
˜ Compatible with TIA/EIA
˜ With 6/8 bits optional dithered output
˜ Spread spectrum output frequency for EMI suppression
. CVBS Video Output
˜ Supports two CVBS bypass output ports
. 2D Graphics Engine
˜ Point draw, line draw, rectangle draw/fill and text draw
˜ BitBlt and stretch BitBlt
˜ Raster Operation (ROP)
. Miscellaneous
˜ DRAM controller to support up to 32-bit DDR2 interface
˜ Supports Common Interface for conditional access
˜ SPI bus for external flash
˜ Two ports of USB 2.0 host controller with the flexibility for connecting external storage devices
˜ 375-ball LFBGA package
˜ Operating at 1.26V (core), 1.9V (DDR2), and 3.3V (I/O and analog)

2、Digital demodulating chip **CE6353**

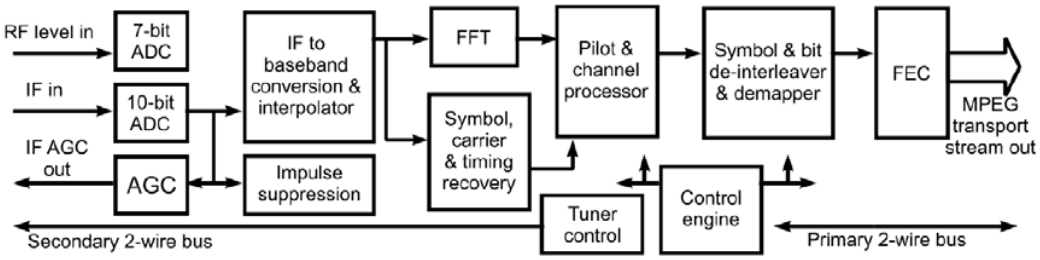

The chip comprises 8MHz bandwidth SAW and supports demodulation of 6MHz, 7MHz and 8MHz, 2K/8K carrier and supports both serial and parallel TS stream output.

3、Audio power amplifier **RENESAS R2A15112**

R2A15112FP is a Digital Power Amplifier IC developed for TV.
R2A15112FP has a maximum power of 15W(typ) × 2ch.
(VD = 24V,THD = 1%, SE) at a 4 Ω load.
It is possible to replace a conventional analog amplifier with a digital amplifier easily.

●Maximum power out put (No external heat sink)
(note) These apply when the thermal pad is soldered to the printed-circuit board directly.
Recommended Power Condition
SE operation mode :15Wx2ch(VD=24V,4Ω load,THD+N:1%）
BTL operation mode:30Wx1ch(VD=21V,8Ω load,THD+N:10%）
●Highly efficient, low noise, and low distortion
●Popless
●Built-in protection - Overcurrent, overheat, and undervoltage
●Built-in Mute and Standby function
●The gain can be changed to four settings by two terminals.

Downloaded from www.Manualslib.com manuals search engine

●Power supply voltage : 11V to 25V
●Speaker Impedance : from 4 to 8Ω

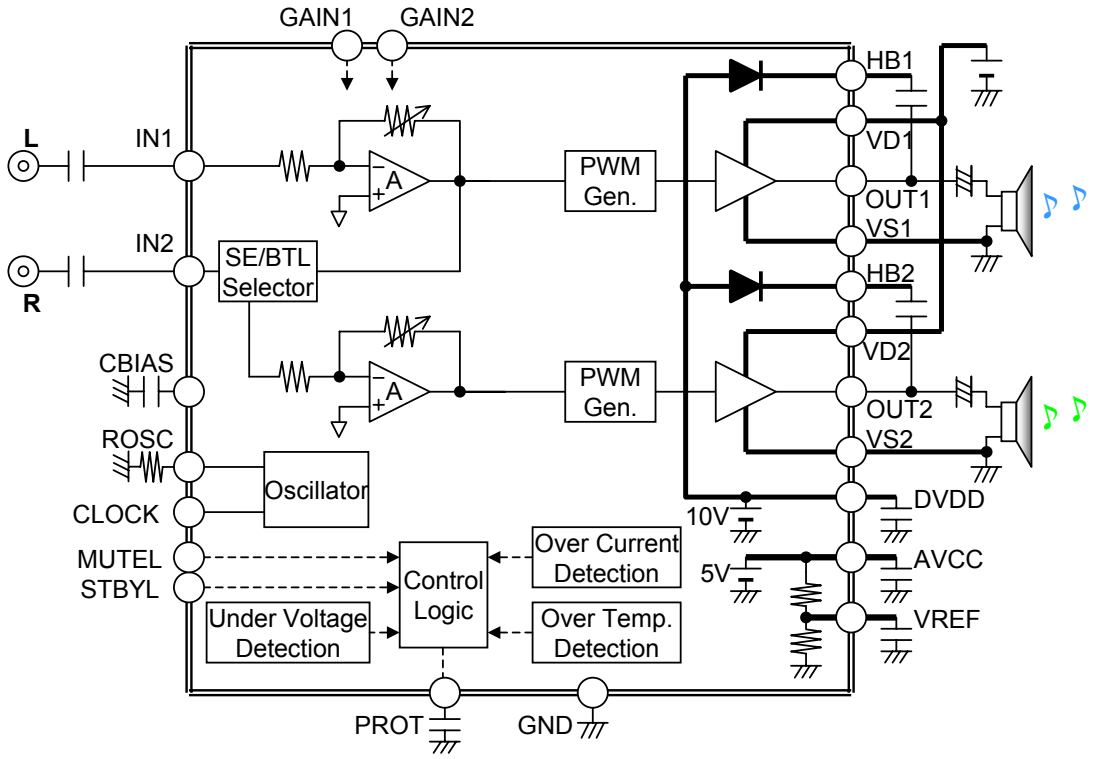

4、 Tuner：**FQD1116ME/IV**

The FQD1116 belongs to the new family of highly-featured hybrid frontends, which are designed to meet a wide range of RF applications. The FQD1116 combines the functions of a DVB-T digital tuner and a multi-standard TV IF demodulation unit for both positive and negative modulated TV systems. The unit includes a 7 MHz digital SAW filter with an IF AGC amplifier for connection to the DVB-T channel decoder. The FQD1116 is intended for CCIR L/L' (France), B/G, I and D/K systems and DVB-T broadcast.

The frontends have a built-in digital (I2C) PLL tuning system. A DC-DC converter circuit is built into the FQD1116 to synthesize the tuning voltage required, thus making the frontend a true 5V device.

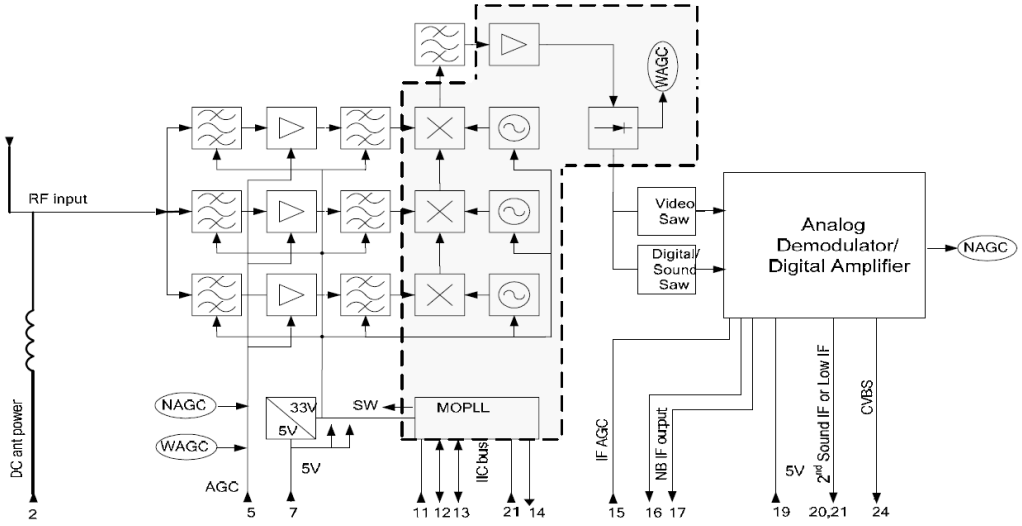

Downloaded from www.Manualslib.com manuals search engine

WIRING DIAGRAM

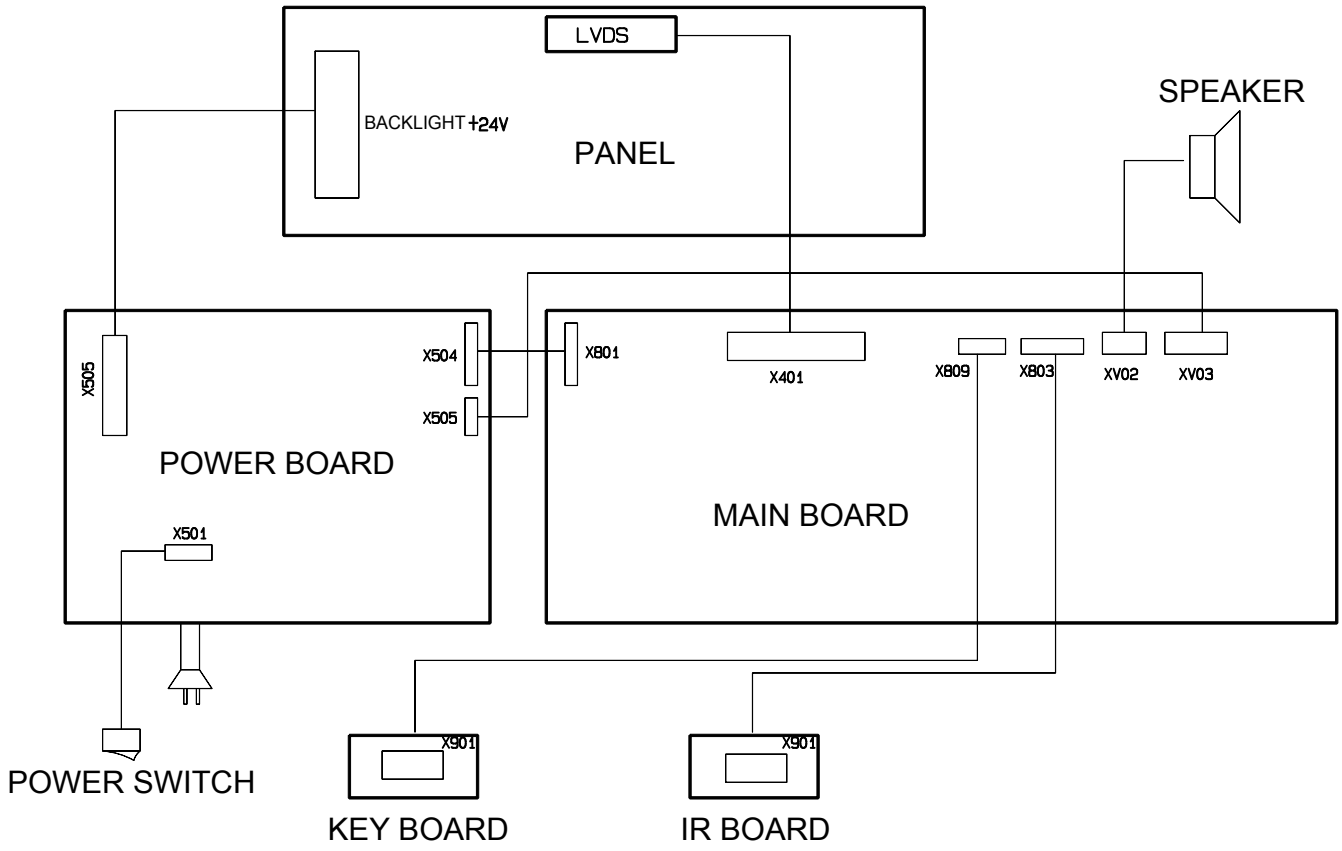

Downloaded from www.Manualslib.com manuals search engine

Troubleshooting guide LCD-32XZ10

1. Panel is dark.

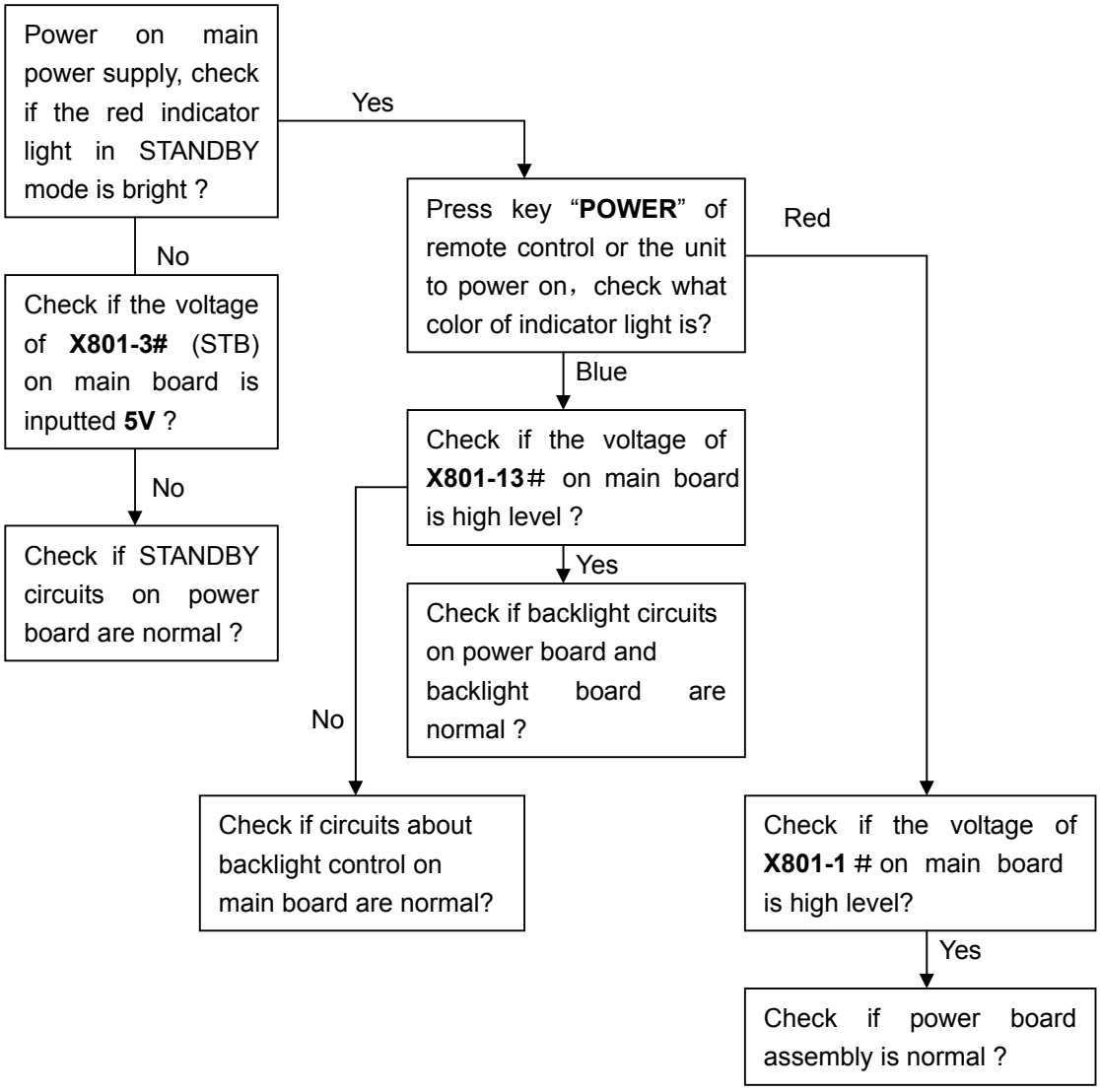

Downloaded from www.Manualslib.com manuals search engine

2. Backlight is normal, but there is no picture

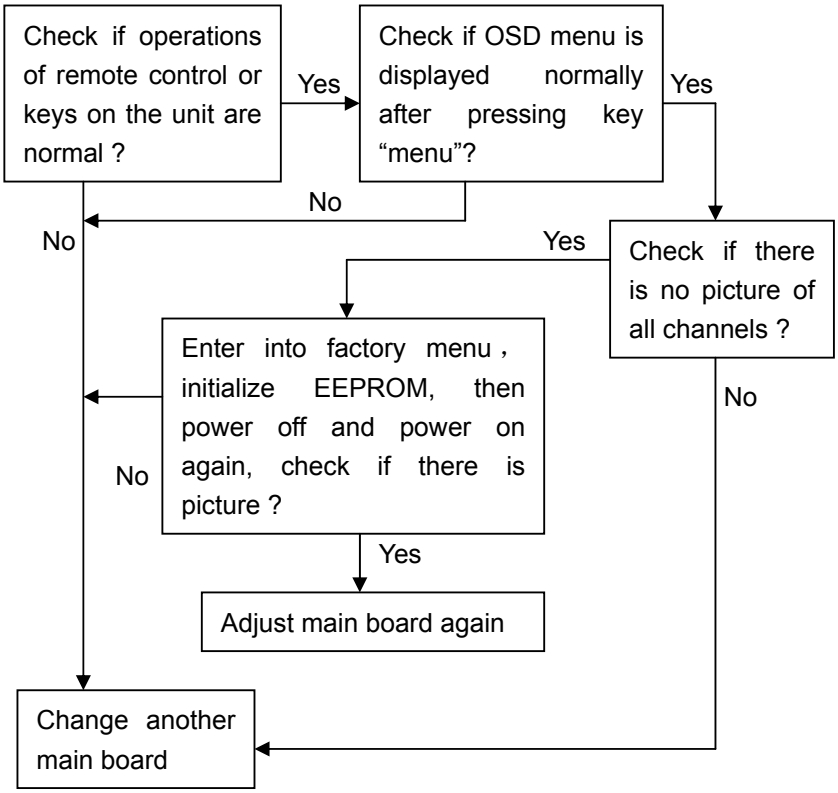

Downloaded from www.Manualslib.com manuals search engine

3. There is picture but no sound.

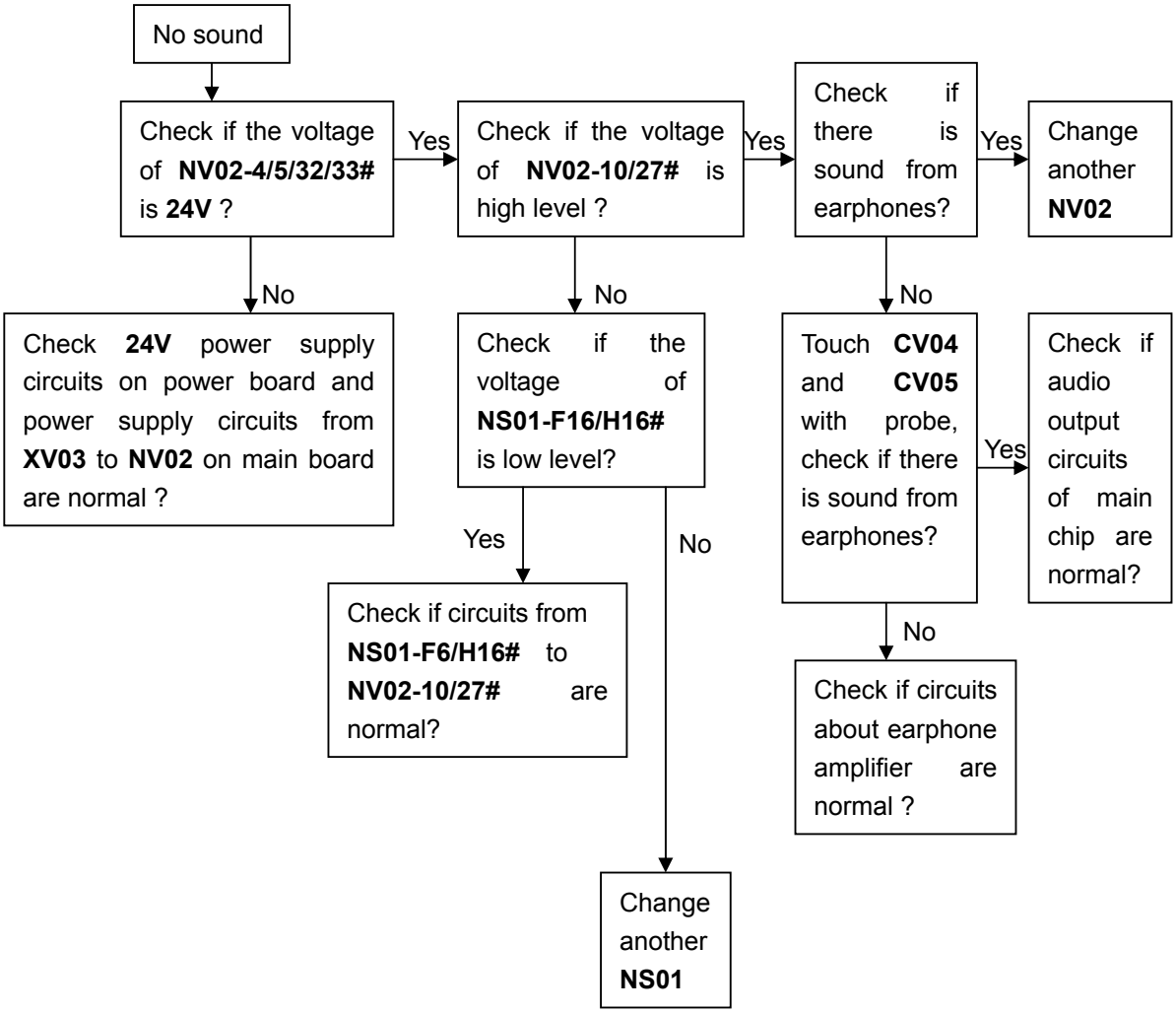

Downloaded from www.Manualslib.com manuals search engine

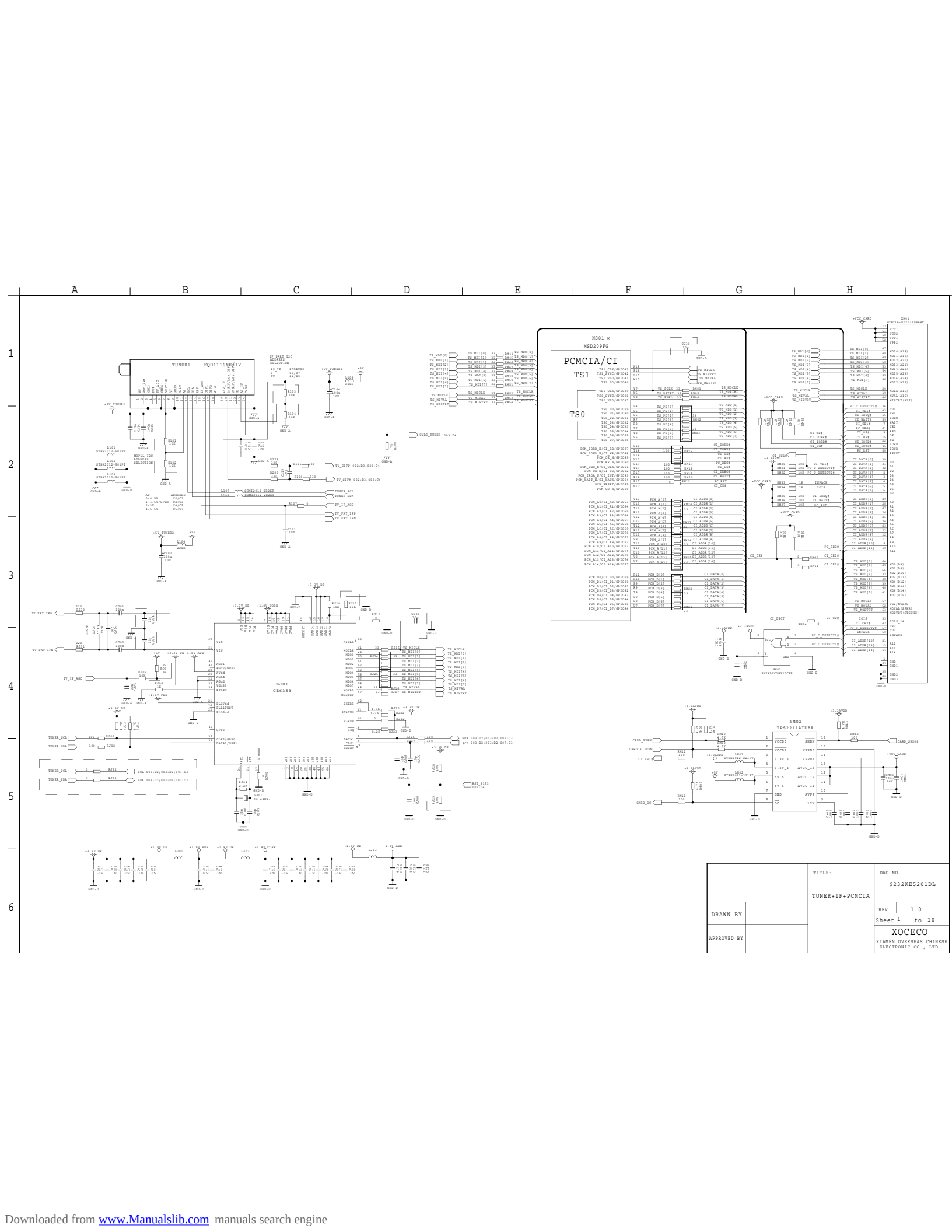

Downloaded from www.Manualslib.com manuals search engine

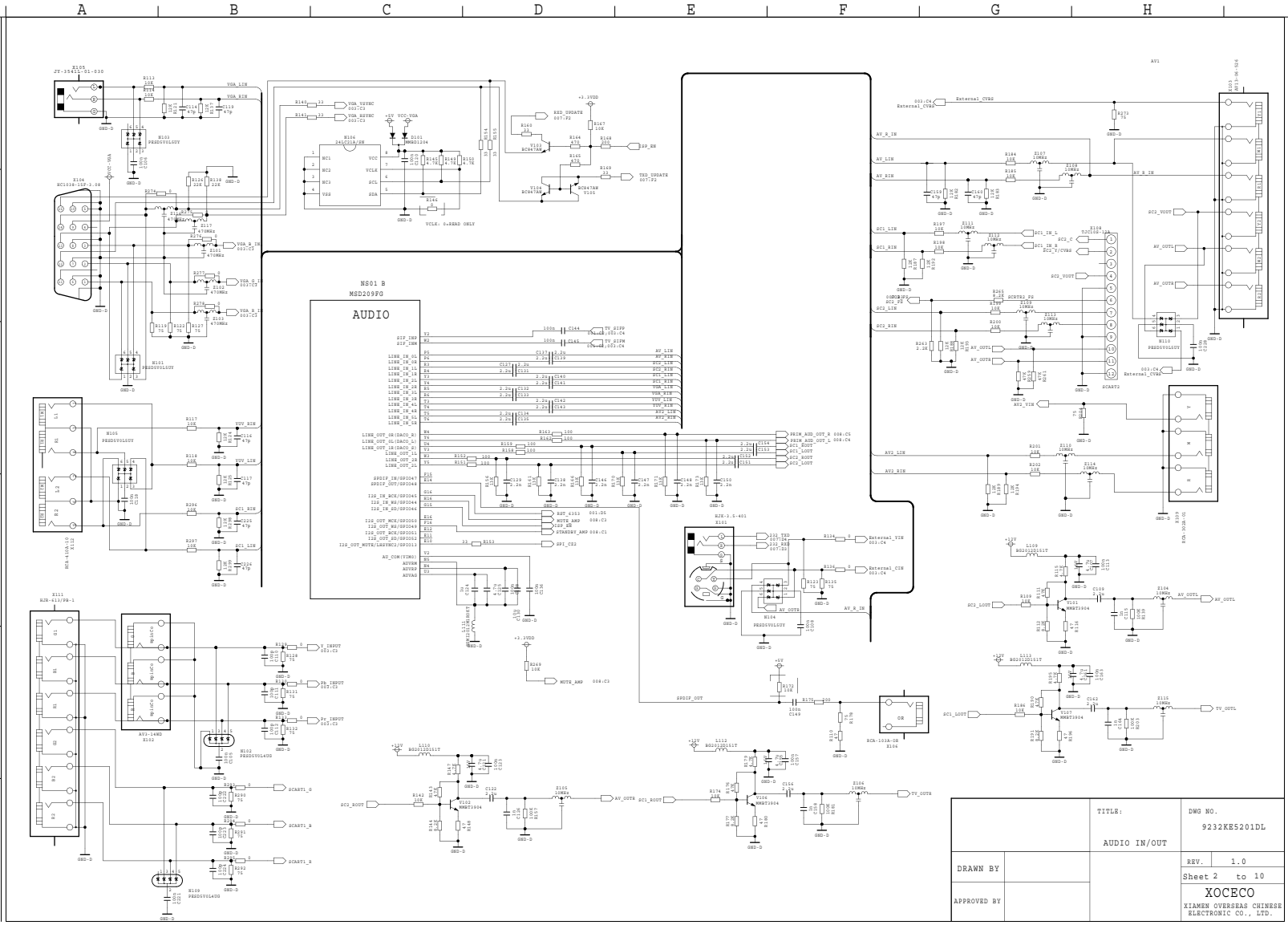

Downloaded from www.Manualslib.com manuals search engine

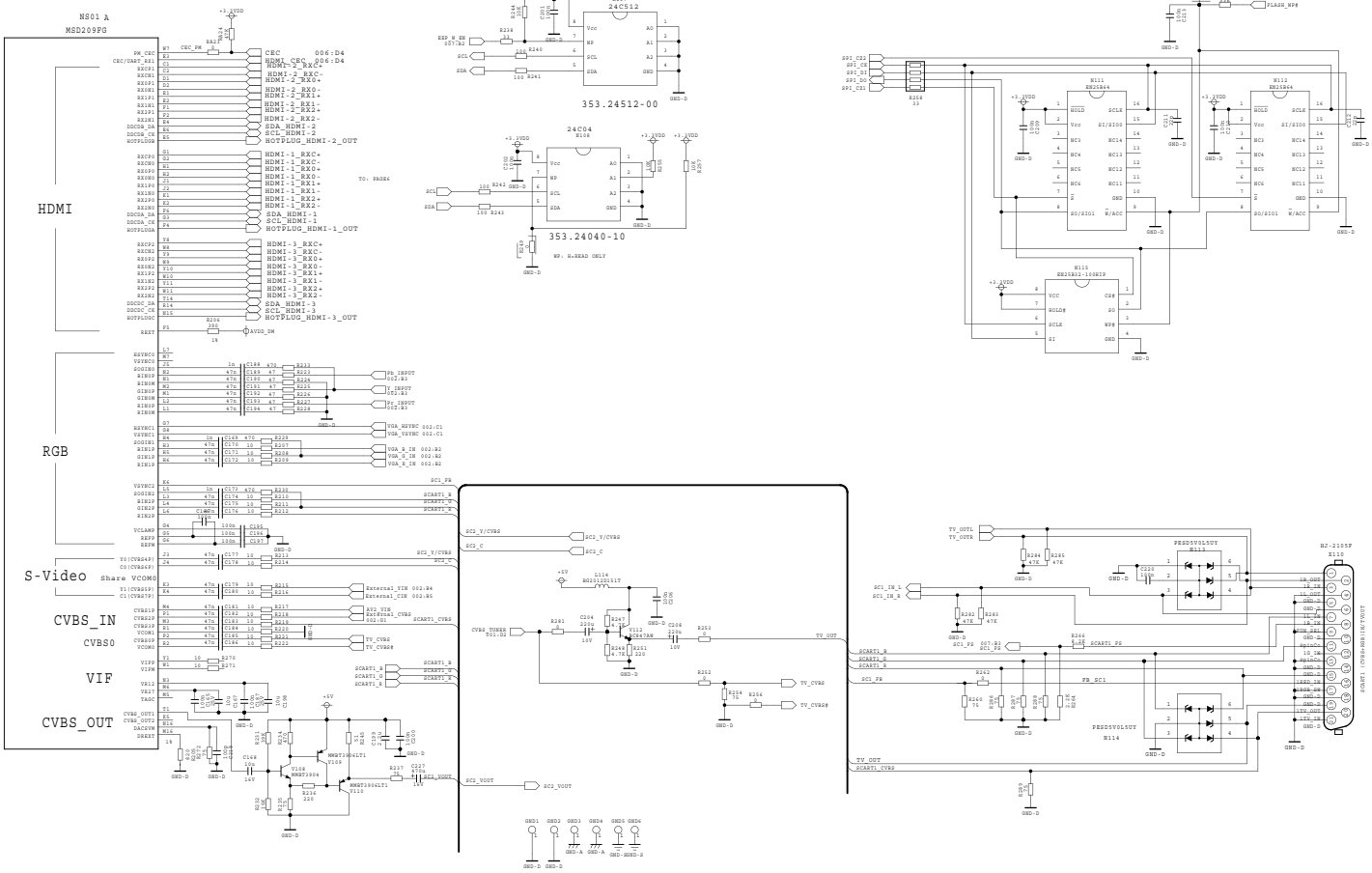

Downloaded from www.Manualslib.com manuals search engine

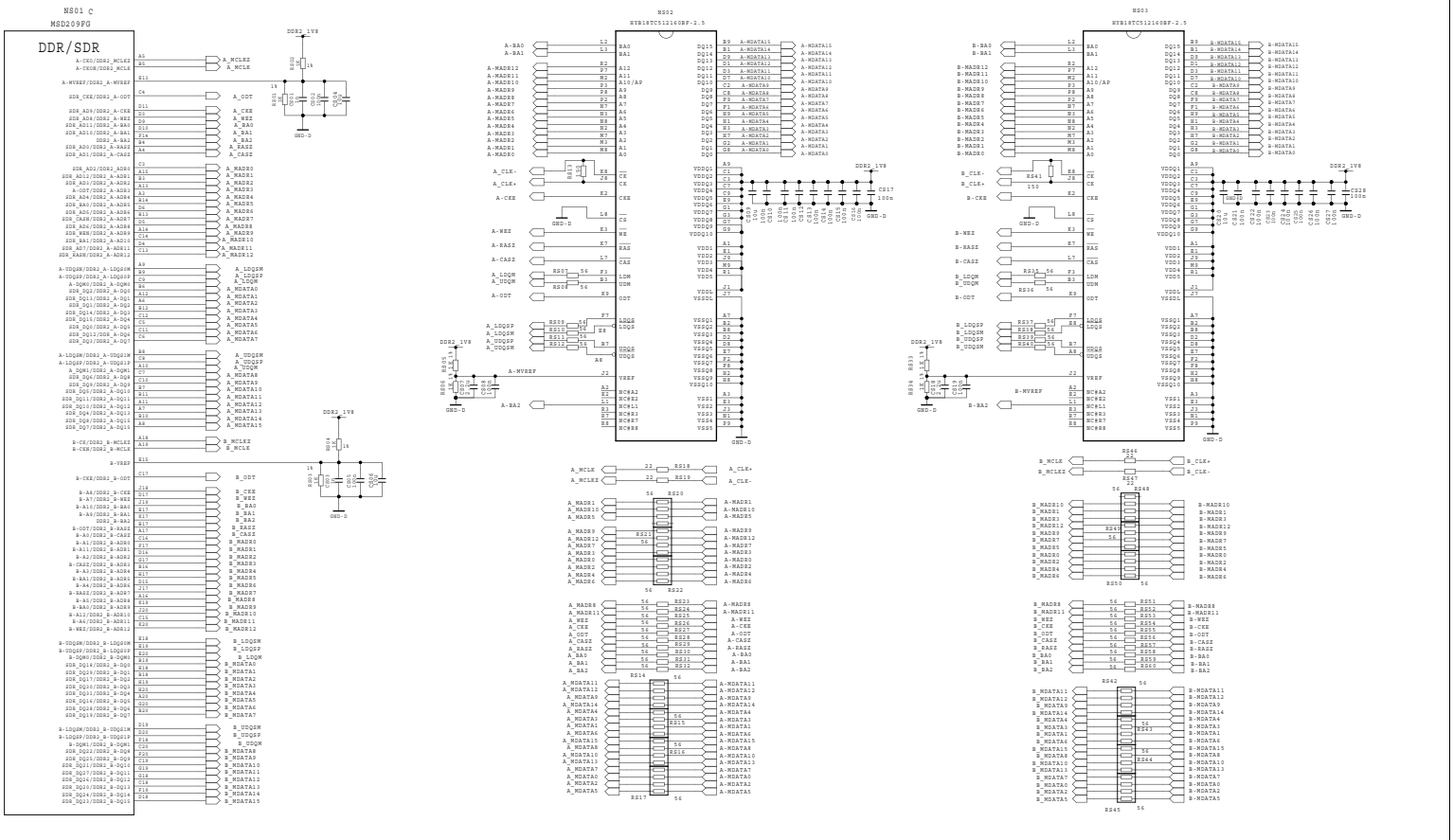

	TITLE: DDR2 MEMORY	DWG NO. 9232KE5201DL
DRAWN BY		REV. 1.0
APPROVED BY		Sheet 4 to 10
		XOCECO XIAMEN OVERSEAS CHINESE ELECTRONIC CO., LTD.

Downloaded from www.Manualslib.com manuals search engine

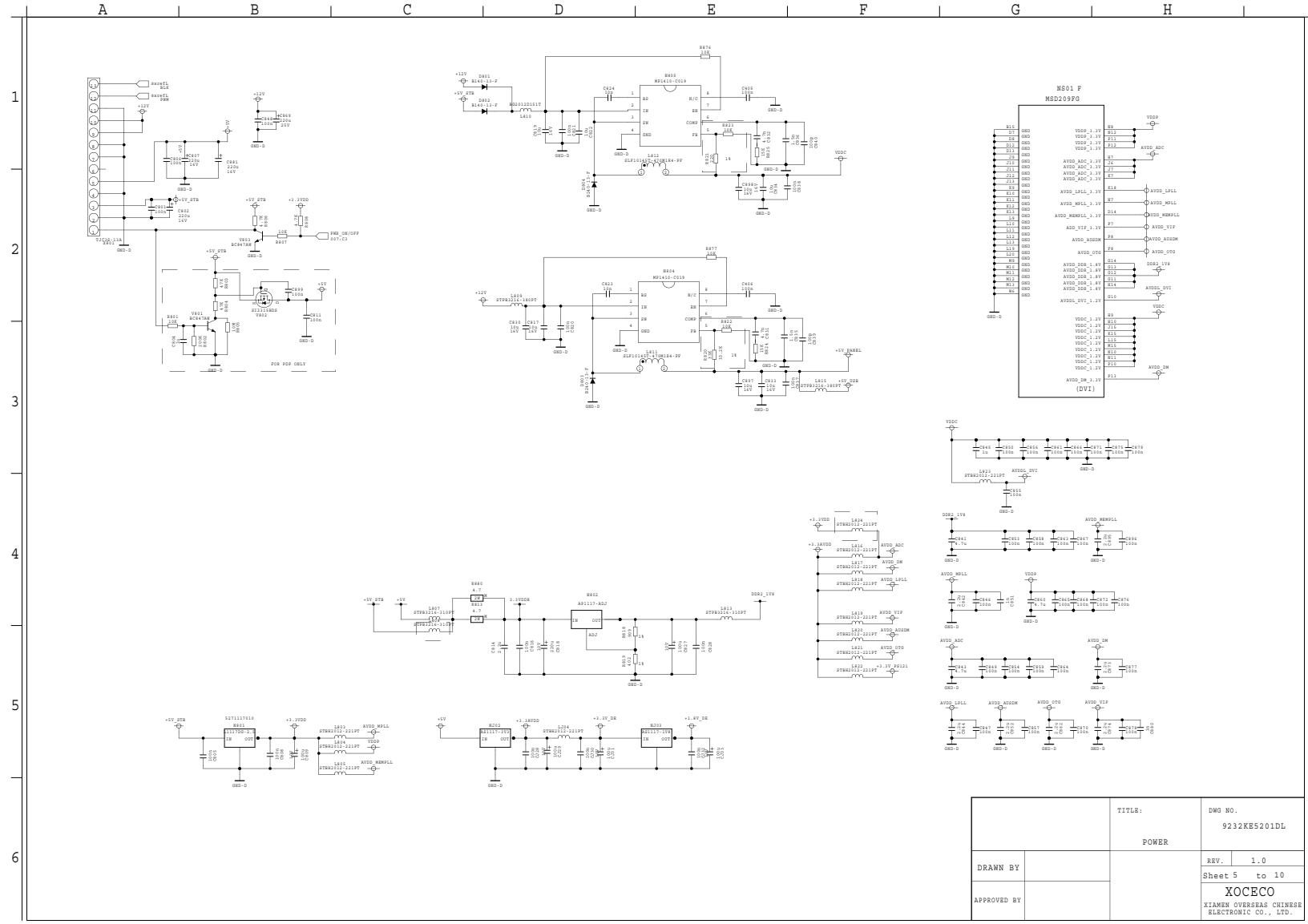

	TITLE: POWER	DWG NO. 9232KE5201DL
DRAWN BY		REV. 1.0
APPROVED BY		Sheet 5 to 10
		XOCECO XIAMEN OVERSEAS CHINESE ELECTRONIC CO., LTD.

Downloaded from www.Manualslib.com manuals search engine

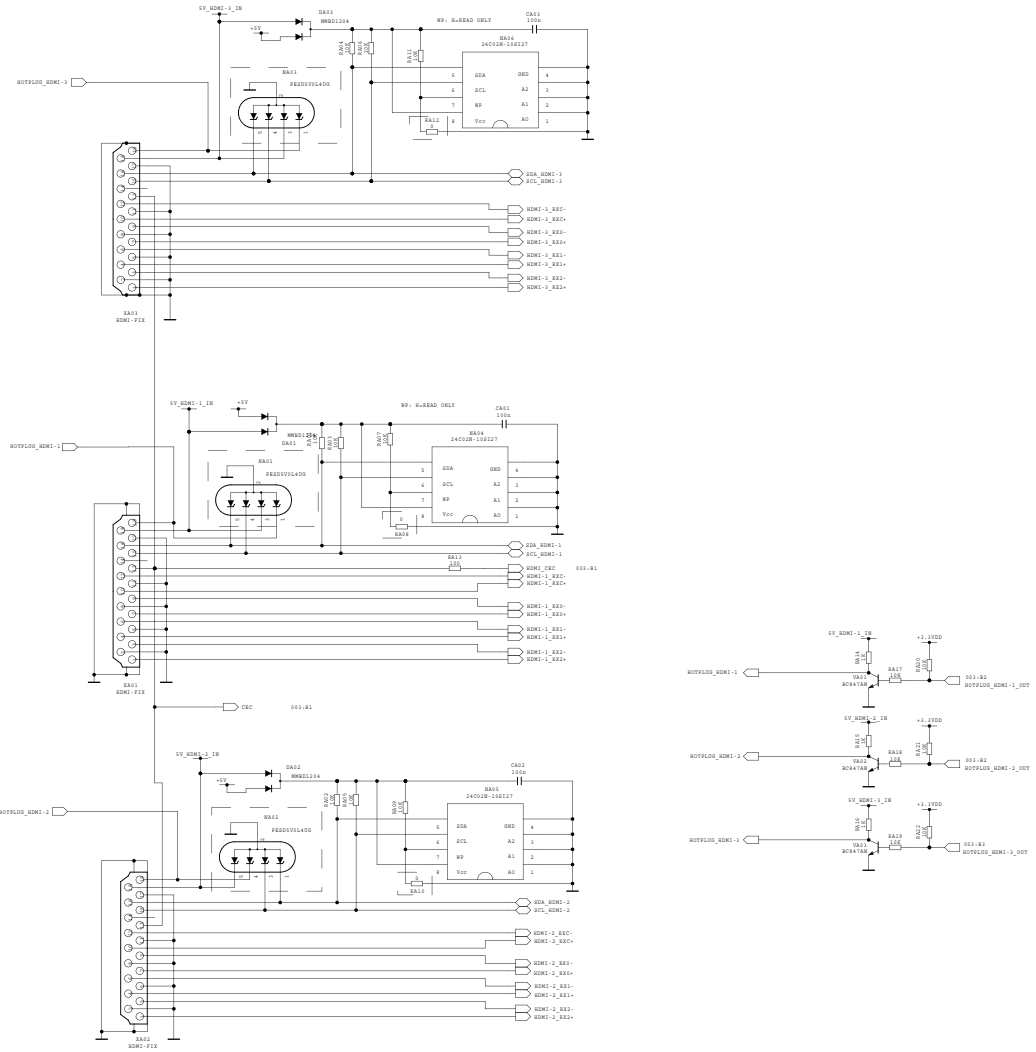

		TITLE: HDMI	DWG NO. 9232KE5201DL
DRAWN BY			REV. 1.0
			Sheet 6 to 10
APPROVED BY			XOCECO XIAMEN OVERSEAS CHINESE ELECTRONIC CO., LTD.

Downloaded from www.Manualslib.com manuals search engine

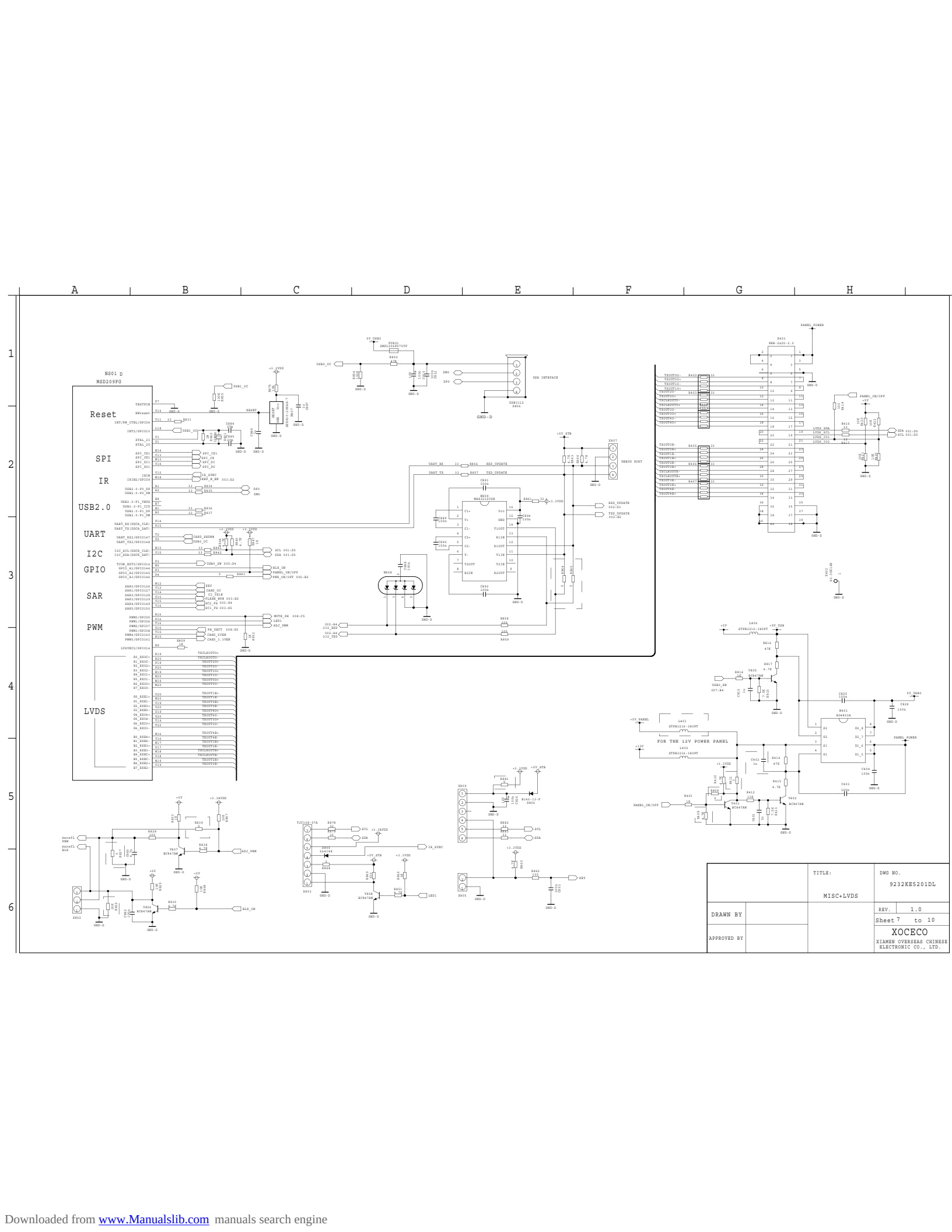

Downloaded from www.Manualslib.com manuals search engine

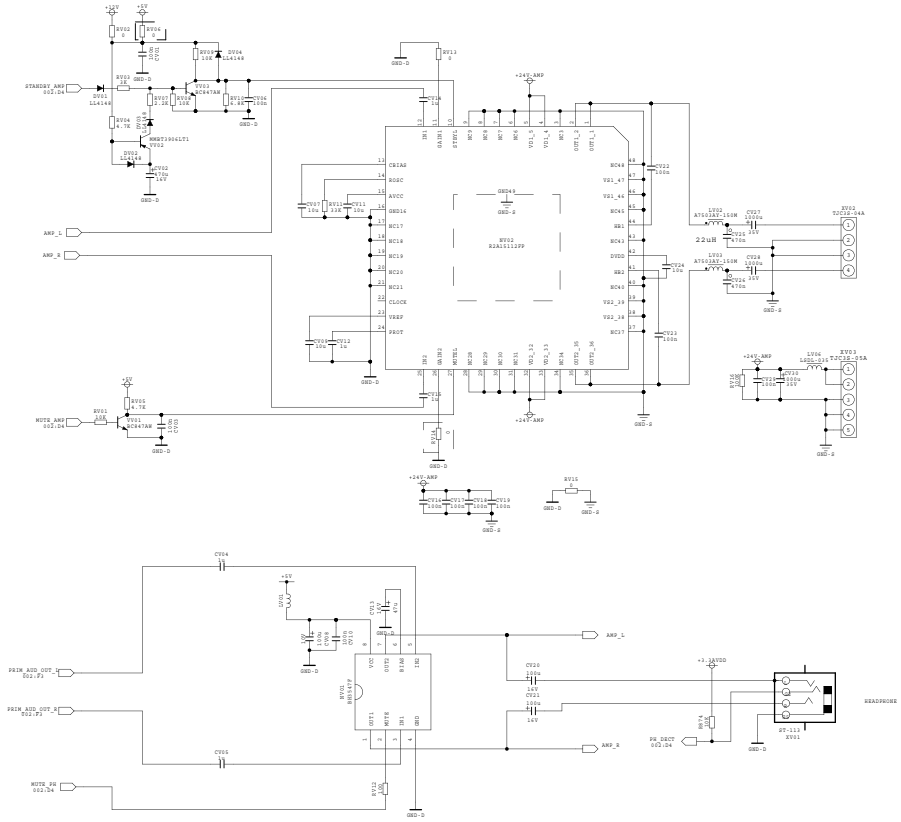

		TITLE: AUDIO AMP	DWG NO. 9232KE5201DL
DRAWN BY			REV. 1.0
			Sheet 8 to 10
APPROVED BY			XOCECO XIAMEN OVERSEAS CHINESE ELECTRONIC CO., LTD.

Downloaded from www.Manualslib.com manuals search engine

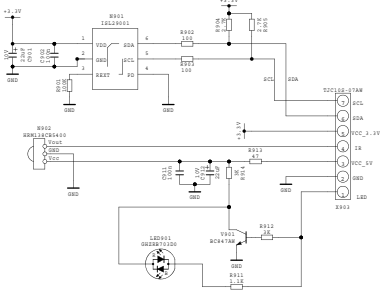

IR

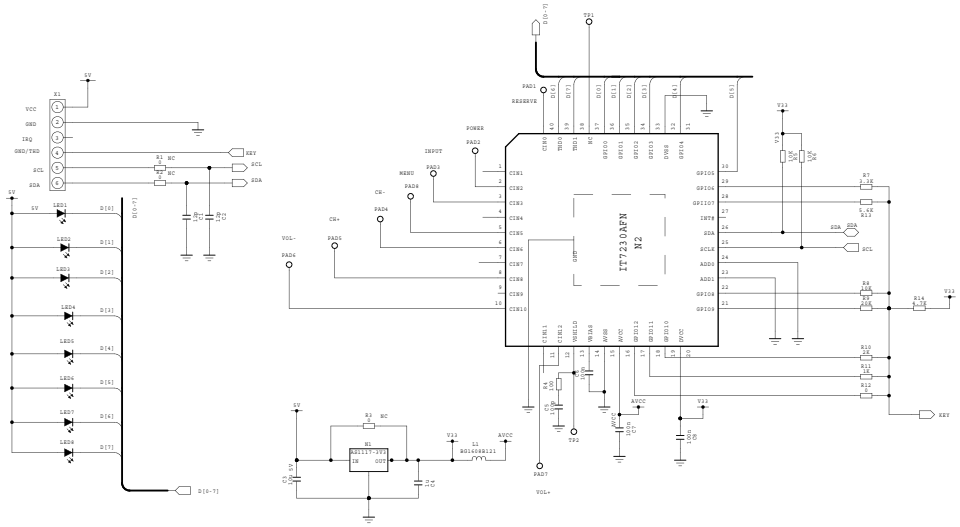

KEY

		TITLE: IR + TOUCH KEY	DWG NO. 9232KE5201DL
DRAWN BY			REV. 1.0
APPROVED BY			Sheet 9 to 10
			XOCECO XIAMEN OVERSEAS CHINESE ELECTRONIC CO., LTD.

Downloaded from www.Manualslib.com manuals search engine

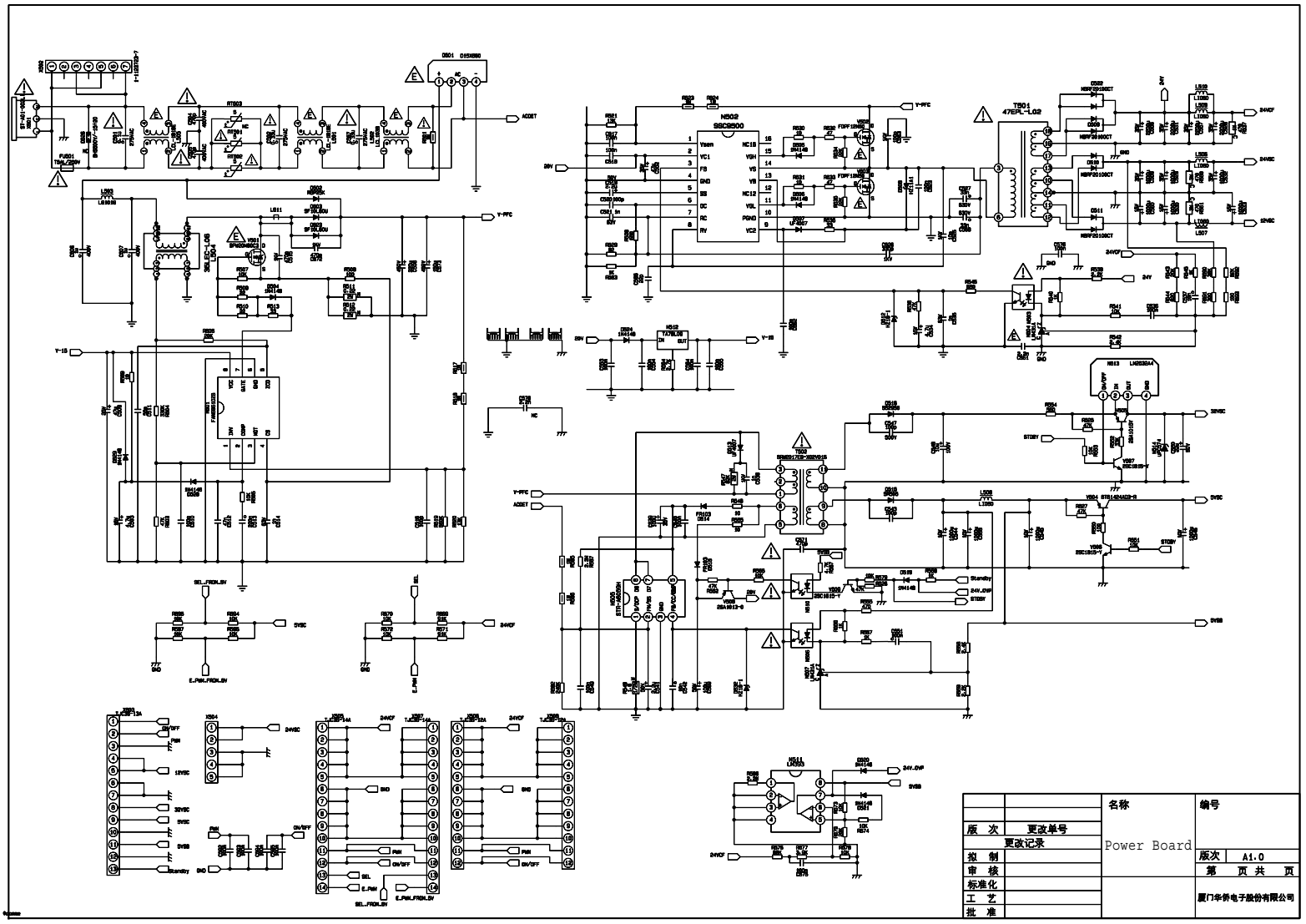

Downloaded from www.Manualslib.com manuals search engine

APPENDIX-A: Main assembly 9246KE5211

NAME	NO.	MAIN COMPONENT AND IT'S NO.	
Main board	XI6KE0250110	NS01 NS02 NS03 NJ01 TUNER1 NV02	MSD209FG-LF (5270209001) K4T51163QG-HCF7(5275116301) CE6353 (5276353001) FQD1116ME/I V (5524000029) R2A15112FP (5271511201)
IR board	XI635KH00200		
Key board	XI635KH00201		
Power board	XI6KH0092010		
Remote control	XI6010900301	RC-903-0A	
Panel	XI5203468302	T460HW03 VG	

Downloaded from www.Manualslib.com manuals search engine

APPENDIX-B: Exploded view (LCD-46XZ10FH)

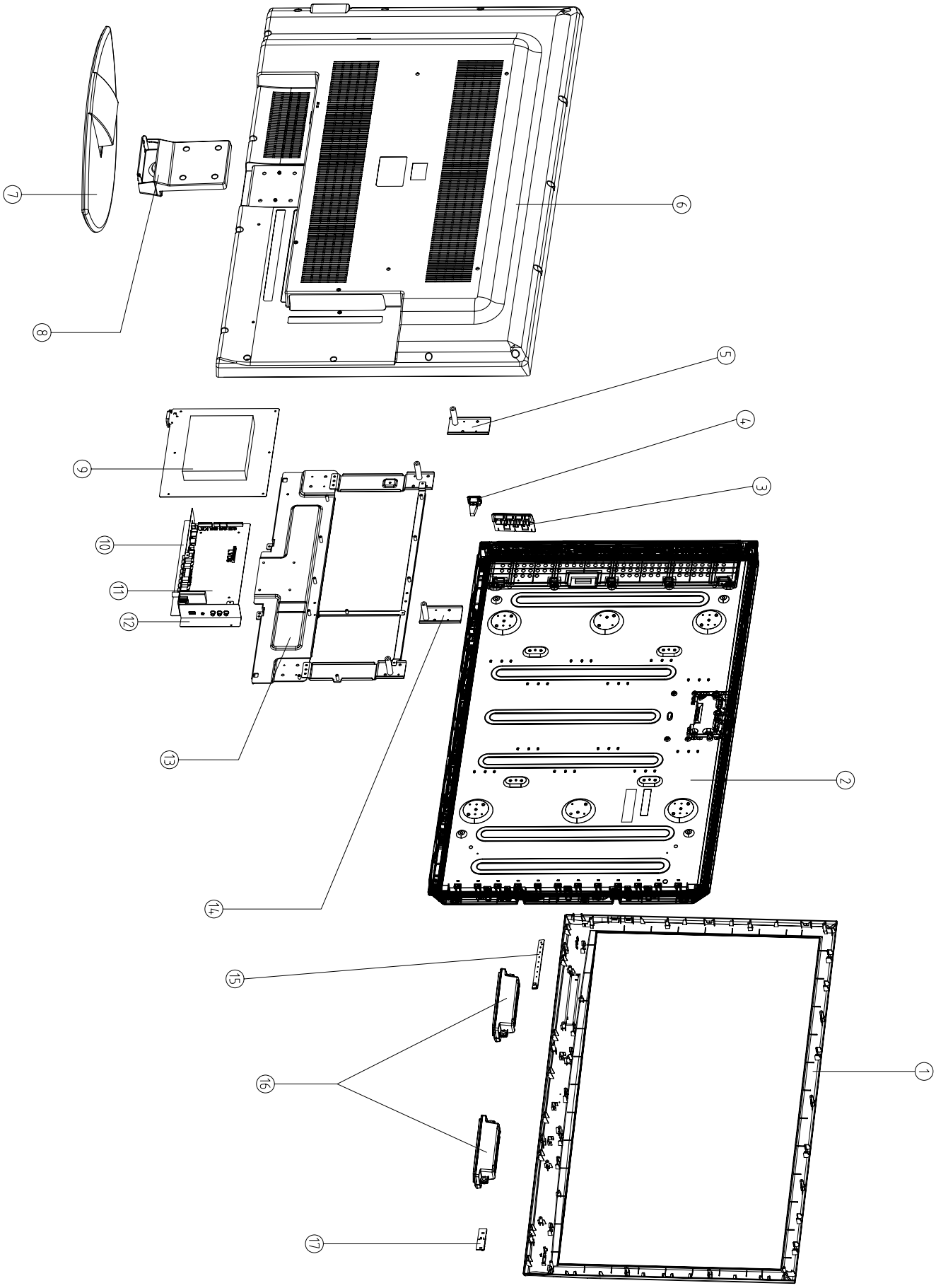

Downloaded from www.Manualslib.com manuals search engine

PART LIST OF EXPLODED VIEW

REF.No.	DESCRIPION
1	Front cabinet
2	Display panel
3	Key bracket
4	Power switch
5	Wall mounting bracket (left)
6	Back cover
7	Pedestal assembly
8	Standing pole assembly
9	Power board assembly
10	Interface baffle (below)
11	Main board assembly
12	Interface baffle (right)
13	Panel holder assembly
14	Wall mounting bracket (right)
15	Touch key board assembly
16	Sound box assembly
17	IR assembly

Note: design and specification are subject to change without notice.

Downloaded from www.Manualslib.com manuals search engine

PART LIST

LCD-46XZ10FH ver.1.0

REF.No.	PARTS No.	DESCRIPION	Q'TY	REMARK
1	XI5Q46521010	Front cabinet	1	
2	XI5203468302	Display panel	1	T460HW03 VG
3	XI58B0043410	Key bracket	1	
4	XI5293000056	Power switch	1	
5	XI58A0084100	Wall mounting bracket (left)	1	
6	XI5H4670L020	Back cover	1	
7	XI6151226000	Pedestal assembly	1	
8	XI6156111000	Standing pole assembly	1	
9	XI6HT0232010	Power board assembly	1	
10	XI5810F72200	Interface baffle (below)	1	
11	XI6KE0250110	Main board assembly	1	
12	XI5810F72110	Interface baffle (right)	1	
13	XI6153269000	Panel holder assembly	1	
14	XI58A0084200	Wall mounting bracket (right)	1	
15	XI6KQ0020510	Touch key board assembly	1	
16	XI6170835000	Sound box assembly	2	
17	XI6KH0050910	IR assembly	1	
18	XI6010900301	Remote control	1	
19	XI5944037210	User manual	1	
20	XI60Z0000699	AUO Backlight board	1	
21	XI60Z0000706	AUO Logic board	1	

- Only the parts in above list are used for repairing.
- Other parts except the above parts can't be supplied.

Downloaded from www.Manualslib.com manuals search engine

Assemble & Disassemble the Pedestal Base (Option)

If the stand is provided, please read these instructions thoroughly before attempting this installation.

Safety Precautions:

1. Please read these instructions thoroughly prior to attempting this installation.
2. Be sure to handle this product very carefully when attempting assembly. If you are unsure of your capability, or the use of tools necessary to complete this activity, refer to a professional installer or service personnel. The manufacturer is not responsible for any damages or injuries that occur due to mishandling or improper assembly/installation.
3. When using a table or bench as an aid to assembly, be sure to put a soft cushion or covering to prevent accidental scratching or damage to the unit's finish.
4. The speaker is not intended to support the weight of this display. Do not move or handle this product from the speaker; which can cause damage to the display not covered under the manufacturer's warranty.

To install the stand:

1. Remove the stand from the box and place it on a table or bench.
   You must pay attention to the direction of the stand. The wide portion of the stand should go towards the front of the TV.
2. Lay your TV flat (screen down) on the edge of a table or bench. Make sure that you put down a soft cushion or cloth so that your TV is not scratched.
3. Put the stand close to the TV back, align the stand with the TV by moving the stand steadily until the Stand Locators align with the locating grooves on the stand. And align the screw holes on the TV back with the holes in the stand, then secure the stand to the TV with provided screws.

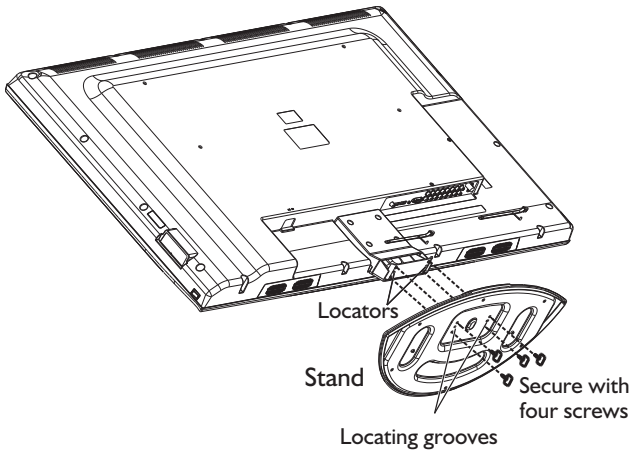

To remove the stand from the TV, perform these steps in reverse order.

Note

The appearance of this product in these illustrations may differ from your actual product, and is for comparative purposes only.

Downloaded from www.Manualslib.com manuals search engine

WALL MOUNTING INSTRUCTIONS

Safety Precautions:

1. Be sure to ask an authorized service personnel to carry out setup.
2. Thoroughly read this instruction before setup and follow the steps below precisely.
3. The wall to be mounted should be made from solid materials. Only use accessories supplied by the manufacturer.
4. Very carefully handle the unit during setup. We are not liable for any damage or injury caused by mishandling or improper installation.
5. Be sure to place the unit on a stable and soft platform which is strong enough to support the unit.
6. Do not uplift the speaker when moving the display. The appearance of the unit may different from the actual ones.
7. Design and specifications are subject to change without notice.
8. Retain these instructions for future reference.

Note: All the wall mounting parts are optional and may be unavailable in your model.

Below we will show you how to mount the Display on the wall using our company's wall mounting components.

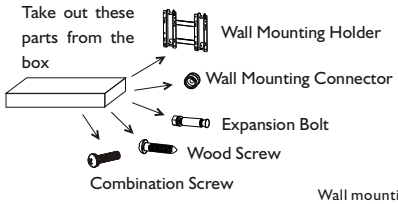

Fig.1

1. There are three options of wall mounting holder with different specifications :200200,200400,200600. Please check your wall mounting holder for its specification.

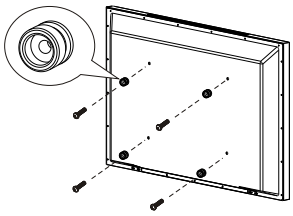

Fig.4

4. Use the 4pcs combination screws to fix the wall mounting connector to the rear of the display unit.(Caution:the direction of the connectors should be strictly confirm to the diagram illustrated above).

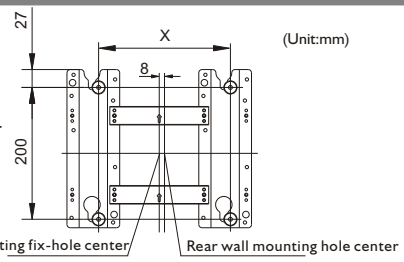

Fig.2

2. Due to the wall mounting fix-groove leaning to the right side, the whole unit will lean to right side after installation, please carefully measure the position of the holes you want to drill, refer to the parameters on Fig.2 when drilling the holes.

Note: The "X" in Fig.2 represents a data. It may be 200mm or 400mm or 600mm.

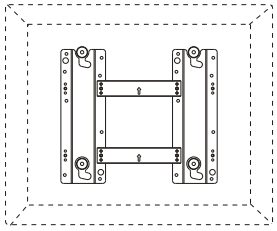

Fig.5

5. Put the back of the display unit close to the wall mounting holder, insert the four wall mounting connectors into the four calabash-shaped holes on the wall mounting holder. (Fig.5)

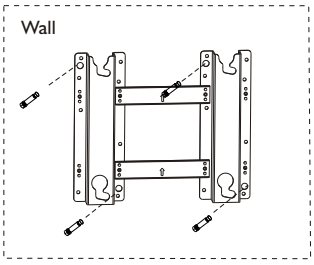

Fig.3a

3a. Screw 4pcs expansion bolts to fix the wall mounting holder on the wall.

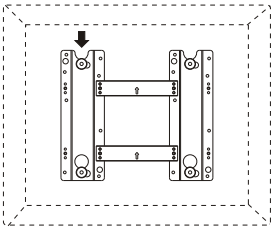

Fig.6

6. Let the display unit slowly slide down to the end of the calabash-shaped hole. (Fig.6)

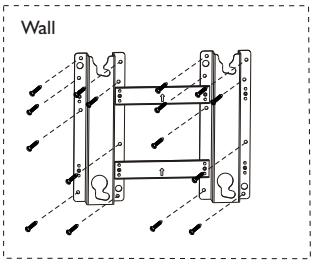

Fig.3b

3b. If your wall is a wooden structure, please fix the wall mounting holder on the wall with 16pcs wood screws.

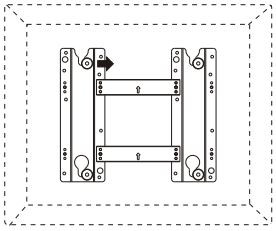

Fig.7

7. Push rightwards carefully until the wall mounting connectors fully slide into the right fix-grooves and be sure the mounting is secure.

8. If you want to dismount the unit do the above steps in reverse order.

Downloaded from www.Manualslib.com manuals search engine

Apr. /2010

SANYO Electric Co., Ltd.

Downloaded from www.Manualslib.com manuals search engine