QQ 376315150 892498299

SANYO

FILE NO.

SERVICE MANUAL

LCD TV

LCD-47XR9KH

PRODUCT CODE No.
1 682 348 54: PAL/SECAM
NTSC(AV)

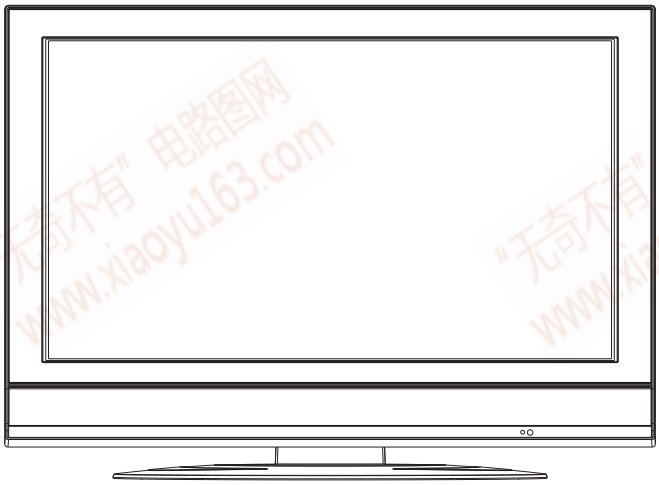

REFERENCE No.:SM0915076

www.xiaoyu163.com

CONTENTS

Safety precautions..... 1

Alignment instructions 3

Working principle analysis of the unit..... 6

Block diagram..... 7

IC block diagram..... 8

Wiring diagram 12

Troubleshooting guide 13

Schematic diagram..... 18

APPENDIX-A: Assembly list

APPENDIX-B: Exploded View

QQ 376315150 892498299

TEL 13942296513 QQ 376315150 892498299

www.xiaoyu163.com

Attention: This service manual is only for service personnel to take reference with. Before servicing please read the following points carefully.

Safety precautions

1. Instructions

Be sure to switch off the power supply before replacing or welding any components or inserting/plugging in connection wire Anti static measures to be taken (throughout the entire production process!):

a) Do not touch here and there by hand at will;

b) Be sure to use anti static electric iron;

c) It's a must for the welder to wear anti static gloves.

Please refer to the detailed list before replacing components that have special safety requirements. Do not change the specs and type at will.

2. Points for attention in servicing of LCD

2.1 Screens are different from one model to another and therefore not interchangeable. Be sure to use the screen of the original model for replacement.

2.2 The operation voltage of LCD screen is 700-825V. Be sure to take proper measures in protecting yourself and the machine when testing the system in the course of normal operation or right after the power is switched off. Please do not touch the circuit or the metal part of the module that is in operation mode. Relevant operation is possible only one minute after the power is switched off.

2.3 Do not use any adapter that is not identical with the TV set. Otherwise it will cause fire or damage to the set.

2.4 Never operate the set or do any installation work in bad environment such as wet bathroom, laundry, kitchen, or nearby fire source, heating equipment and devices or exposure to sunlight etc. Otherwise bad effect will result.

2.5 If any foreign substance such as water, liquid, metal slices or other matters happens to fall into the module, be sure to cut the power off immediately and do not move anything on the module lest it should cause fire or electric shock due to contact with the high voltage or short circuit.

2.6 Should there be smoke, abnormal smell or sound from the module, please shut the power off at once. Likewise, if the screen is not working after the power is on or in the course of operation, the power must be cut off immediately and no more operation is allowed under the same condition.

2.7 Do not pull out or plug in the connection wire when the module is in operation or just after the power is off because in this case relatively high voltage still remains in the capacitor of the driving circuit. Please wait at least one minute before the pulling out or plugging in the connection wire.

2.8 When operating or installing LCD please don't subject the LCD components to bending, twisting or extrusion, collision lest mishap should result.

2.9 As most of the circuitry in LCD TV set is composed of CMOS integrated circuits, it's necessary to pay attention to anti static. Before servicing LCD TV make sure to take anti static measure and ensure full grounding for all the parts that have to be grounded.

2.10 There are lots of connection wires between parts behind the LCD screen. When servicing or moving the set please take care not to touch or scratch them. Once they are damaged the screen

would be unable to work and no way to get it repaired.
If the connection wires, connectors or components fixed by the thermotropic glue need to disengage when service, please soak the thermotropic glue into the alcohol and then pull them out in case of damage.
2.11 Special care must be taken in transporting or handling it. Exquisite shock vibration may lead to breakage of screen glass or damage to driving circuit. Therefore it must be packed in a strong case before the transportation or handling.
2.12 For the storage make sure to put it in a place where the environment can be controlled so as to prevent the temperature and humidity from exceeding the limits as specified in the manual. For prolonged storage, it is necessary to house it in an anti-moisture bag and put them altogether in one place. The ambient conditions are tabulated as follows:

Temperature	Scope for operation	0 ~ +50 ^{o}C
	Scope for storage	-20 ~ +60 ^{o}C
Humidity	Scope for operation	20% ~ 85%
	Scope for storage	10% ~ 90%

2.13 Display of a fixed picture for a long time may result in appearance of picture residue on the screen, as commonly called “ghost shadow”. The extent of the residual picture varies with the maker of LCD screen. This phenomenon doesn’t represent failure. This “ghost shadow” may remain in the picture for a period of time (several minutes). But when operating it please avoid displaying still picture in high brightness for a long time.

3. Points for attention during installation

3.1 The front panel of LCD screen is of glass. When installing it please make sure to put it in place.
3.2 For service or installation it’s necessary to use specified screw lest it should damage the screen.
3.3 Be sure to take anti dust measures. Any foreign substance that happens to fall down between the screen and the glass will affect the receiving and viewing effect
3.4 When dismantling or mounting the protective partition plate that is used for anti vibration and insulation please take care to keep it in intactness so as to avoid hidden trouble.
3.5 Be sure to protect the cabinet from damage or scratch during service, dismantling or mounting.

www.xiaoyu163.com

Alignment instructions

1. Test equipment

PM5518 (video signal generator)

VG-848 (VGA and HDMI signal generator)

CA210 (color analyzer)

2 Alignment flow-chart

The alignment flow-chart is shown as fig-1

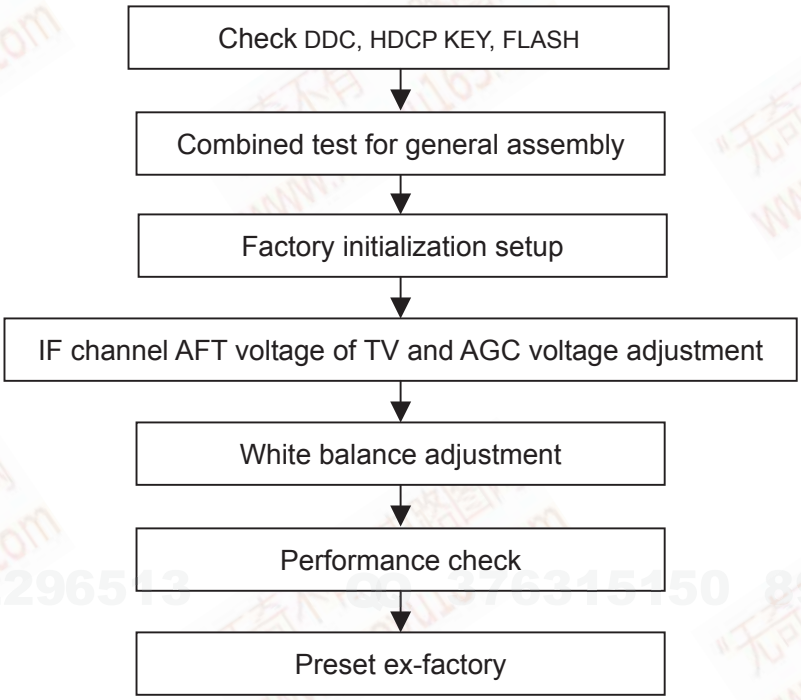

Fig-1 adjustment flow-chart

3 Unit adjustments

Connect all the boards according to wiring diagram, connect with power and observe the display.

Method for entering factory menu: press “INPUT”, “2”, “5”, ”8” and “0” in turn to enter factory menu; press “CH+” and “CH-” to select adjustment items and press “VOL+” and “VOL-” to adjust value items, press “MENU” repeatedly to exit.

3.1 Initialization

Enter factory menu, select “OPTION” and “HOTEL OPTION” sub-menu, adjustment of items to see table1.

Table1 sub-menu adjustment

Items	Preset	Introduce
HOTEL	0	1: HOTEL OPTION of factory menu is optional 0: HOTEL OPTION of factory menu is not optional
LOGO	1	1: display LOGO in no signal or turn on 0: no LOGO display
ADC PRESCALE	00A	adjust according the power consumption

www.xiaoyu163.com

SIF PRESCALE	000	adjust according the power consumption
BACK LIGHT	28	Adjust according the screen
ALL COLOR	1	1: white balance of each channel auto offset based on the HDMI white balance 0: white balance of each channel adjust the offset base separately
ISP	0	0: no upgrade on line 1: upgrade on line
NO STANDY	00	01: turn on 00: memory function of turn on 10: standby
INIT VOLUME	0-100	Volume when turn on
INIT CHANNEL	1-200	Channel when turn on
INIT SRC	Program source	Input Source when turn on
EEPROM-MEMORAY RECALL	>	EEPROM Initialization (operate when EEPROM data chaos)

3.2 Adjustment for AFT and AGC of IF channel in TV

3.2.1 IF AFT adjustment

Disconnect J601(B face), input 80dB 38.9MHz PAL signal to the pole of J601 near the socket, adjust L604 to value 1.65V of TP602, enter the factory menu, set TDA4470 from BG to LL and input 80dB 33.9MHz SECAM signal, adjust RP602 to value 1.65V of TP602, then weld J601.

3.2.2 IF AGC adjustment

Input 184.25MHz RF signal of 60dB to RF terminal, adjust RP601 to value 4V of TP604, and there should be no obvious snowy picture. Increase the input signal to 90dBV and it should be no obvious noisy.

3.3 White balance adjustment

3.3.1 HDMI white balance adjustment

a. Input VG-848 signal to HDMI: TIMING854(800*600/60Hz)of PAT920 8 gray scale signal, adjust the balance with CA210.

b. Enter COLOR TEMP sub menu and select color temperature of standard (9300K), the value of coordinate is recommended.

c. Fixed B GAIN, adjust R GAIN, G GAIN to let the color coordinate of the seventh level be (285,293); Fixed BOFF, adjust R OFF, G OFF to let the color coordinate of the second level be (285,293) and the brightness is about 3nit-10nit. Repeat adjust R GAIN, G GAIN, R OFF and G OFF, until the color coordinate of the two level gray scale be (285,293).

3.3.2 VGA/YPbPr/ AV white balance check and correct

a. Connect VG-848 signal of VGA to VGA terminal and input TIMING854 (800*600/60HZ) (PATTERN: CROSS), and auto adjust to full screen then input PAT948 white and black signal, enter submenu of ADC ADJ, select AUTOTUNE and wait for OK display. Input PAT920(8 gray levels), check if the white balance is normal, if not, set ALL COLOR to 0 and fine adjust according the method of 3.3.1

b. connect VG-848 YPbPr signal to YPbPr terminal and input TIMING972(1080I/60Hz) PAT908 color bar(include back/white bars), enter submenu of ADC ADJ, select AUTOTUNE and wait for OK display. Input PAT920(8 gray levels), check if the white balance is normal, if not, set ALL COLOR to 0 and fine adjust according the method of 3.3.2

c. Input AV signal(PM5518,8 gray scale) to VIDEO terminal and check if the white balance is

www.xiaoyu163.com

normal, if not, set ALL COLOR to 0 and fine adjust according the method of 3.3.2.
Note: it can't set back to 1 once ALL COLOR changes to 0.

4. Software upgrading:

Enter factory menu and select "OPTION", set ISP to 1 and you can upgrade the software on line. After upgrade, it needs to set ISP back to 0. if it can not display the image during the upgrading, join J201 on main board, then perform the upgrading, when upgrade finish, disconnect J201 again.

5 Performance check

5.1 TV function

Enter searching menu → auto search, connect RF-TV terminal with central signal source and check if the picture is normal, if there are channels be skipped. Check TXT and parental control function.

5.2 AV/S, YPbPr terminals

Input AV/S, YPbPr / YCbCr HD signals, check if it is normal.

5.3 VGA terminal

Insert VGA terminal, input VGA format signal of 640X480@60 Hz and check if the display is normal.

5.4 HDMI terminal

Insert HDMI terminal, input 640X480@60Hz signal, check if the display is normal. Check HDCP function.

5.5 check sound channel

Check the speaker and earphone of each channel.

5.6 RS232 terminal

Insert the earphone wire to COM port, check the long-distance control function with special test software.

5.7 other function check

Check the asleep timer, picture/sound mode, OSD, freeze/mute, stereo, etc.

5.8 presetting before ex-factory

Item	Setting
PICTURE MODE	STANDARD
COLOR MODE	NORMAL
AFC	ON
ZOOM	FULL
SOUND MODE	STANDARD
AVC	OFF

Item	Setting
BALANCE	50
VOLUME	50
SLEEP TIMER	OFF
TTX LANGUAGE	WEST

Item	Setting
OSD LANGUAGE	English
OSD HPOSITION	50
OSD VPOSITION	50
OSD HALFTONE	50
OSD DURATION	15

www. xiaoyu163. com

Working principle analysis of the unit

The RF signal received by antenna will be sent to tuner TUN601, then IF signal will be obtained through high amplified and mixed frequency. After pre-intermediate amplified by V608, it will be sent to acoustic surface-wave Z605 to do IF filter and get better IF characteristics, then it will be sent to N602 (TDA4470) to do intermediate amplification, phase-lock loop VCO and synchronous wave detection to get the video signal TV-V; after pre-intermediate amplification IF will also be sent to acoustic surface-wave Z604 to do filter at the same time, the it will be sent to N404 to do intermediate amplification and output the second sound intermediate frequency signal TV-SIF.

TV-V output from TDA4470 and TV-SIF will be sent to the main IC N304(MST9E89DL)

Video and audio signals of AV/S, VGA, YPbPr will be sent to MST9E89DL too.

3 groups HDMI after PS321 selecting, their video and audio signal will be sent to MST9E89DL.

RGB of SCART1, AV, S-Y and S-C of SCART2 will also be sent to MST9E89DL, their audio signal and YPbPr, AV/S audio signal via audio switch HEF4052BT selection to MST9E89DL.

The main IC N304(MST9E89DL) is a high performance and fully integrated IC, which can realize HDMI interface processing, video decoding, video switch selection, A/D and D/A conversion, interlace/de-interlace processing, modes conversion, OSD and low-voltage differential output, etc. And it also has functions of audio selection, processing and MCU.

The video signal via MST9E89DL processing, output 4 pairs differential signal and 1 pair clock signal for LCD panel display. TV-V from TDA4470 after video double amplifying and sent to SCART1 as AV-OUT. AV processed by MST9E89DL after quadruple amplifying and output as AV-OUT and SCART2 AV-OUT.

The audio signal via MST9E89DL processing, it will be sent to N206 (BH3547F) amplifying to earphone. The audio signal will also sent to sound amplifier N203 (TPA3120-D2) amplifying to speaker. TV-L/R processed by MST9E89DL will be sent to SCART1 for AV-OUT, at the same time, TV-L/R and AV-L/R will output together as the audio output of AV-OUT and SCART2 AV-OUT.

www. xiaoyu163. com

Block diagram

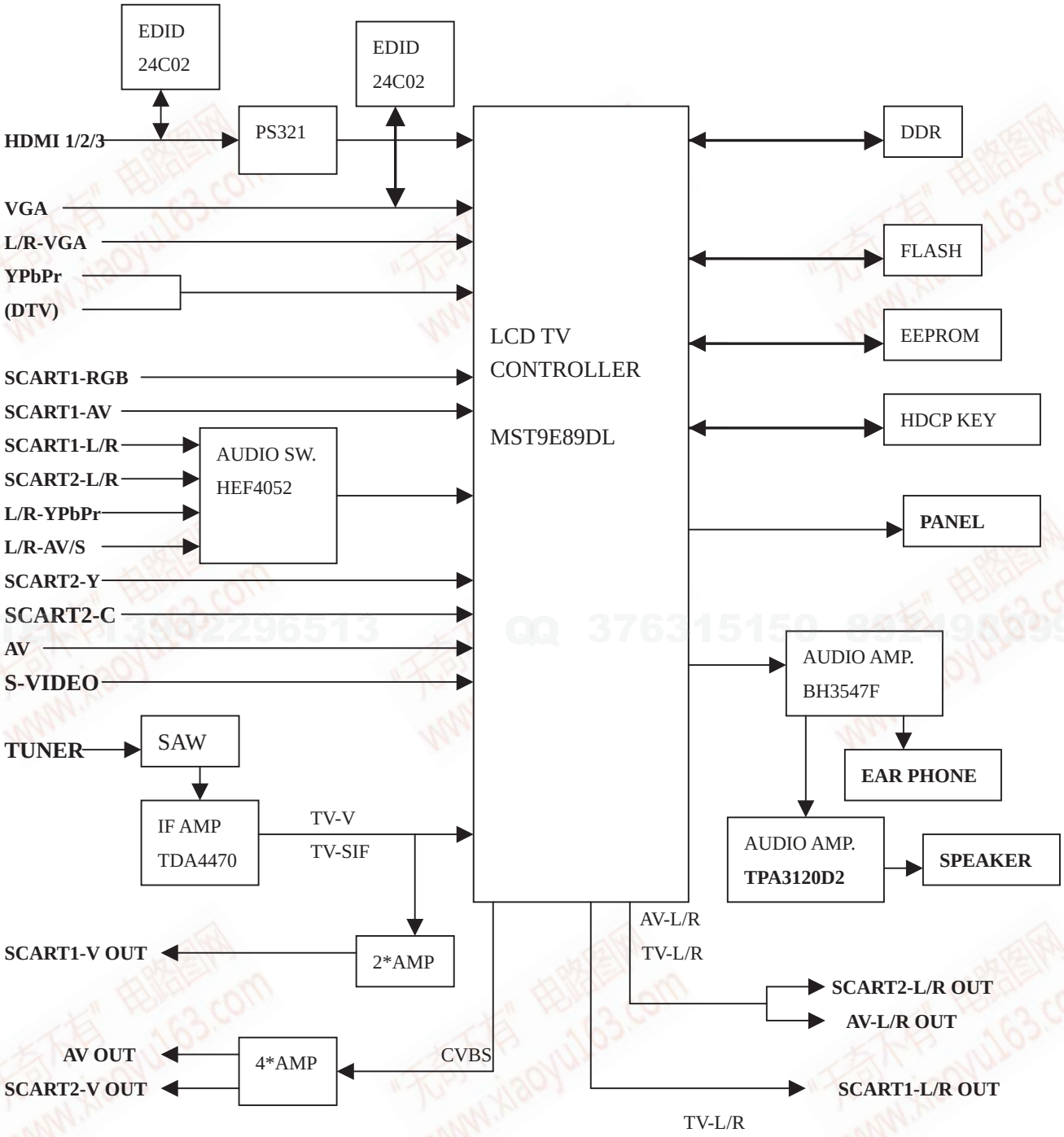

www.xiaoyu163.com

IC block diagram

1. MST9E89DL

The MST9E89DL is a high performance and fully integrated IC for multi-function LCD monitor/TV with resolutions up to full HD (1920x1080). It is configured with an integrated triple-ADC/PLL, an integrated DVI/HDCP/HDMI receiver, a multi-standard TV video and audio decoder, two video de-interlacers, two scaling engines, the MStarACE-3 color engine, an on-screen display controller, an 8-bit MCU and a built-in output panel interface. By use of external frame buffer, PIP/POP is provided for multimedia applications Furthermore, 3-Dvideo decoding and processing are fulfilled for high-quality TV applications. To further reduce system costs, the MST9E89DL also integrates intelligent power management control capability for green-mode requirements and spread-spectrum support for EMI management.

PIN DIAGRAM (MST9E89DL)

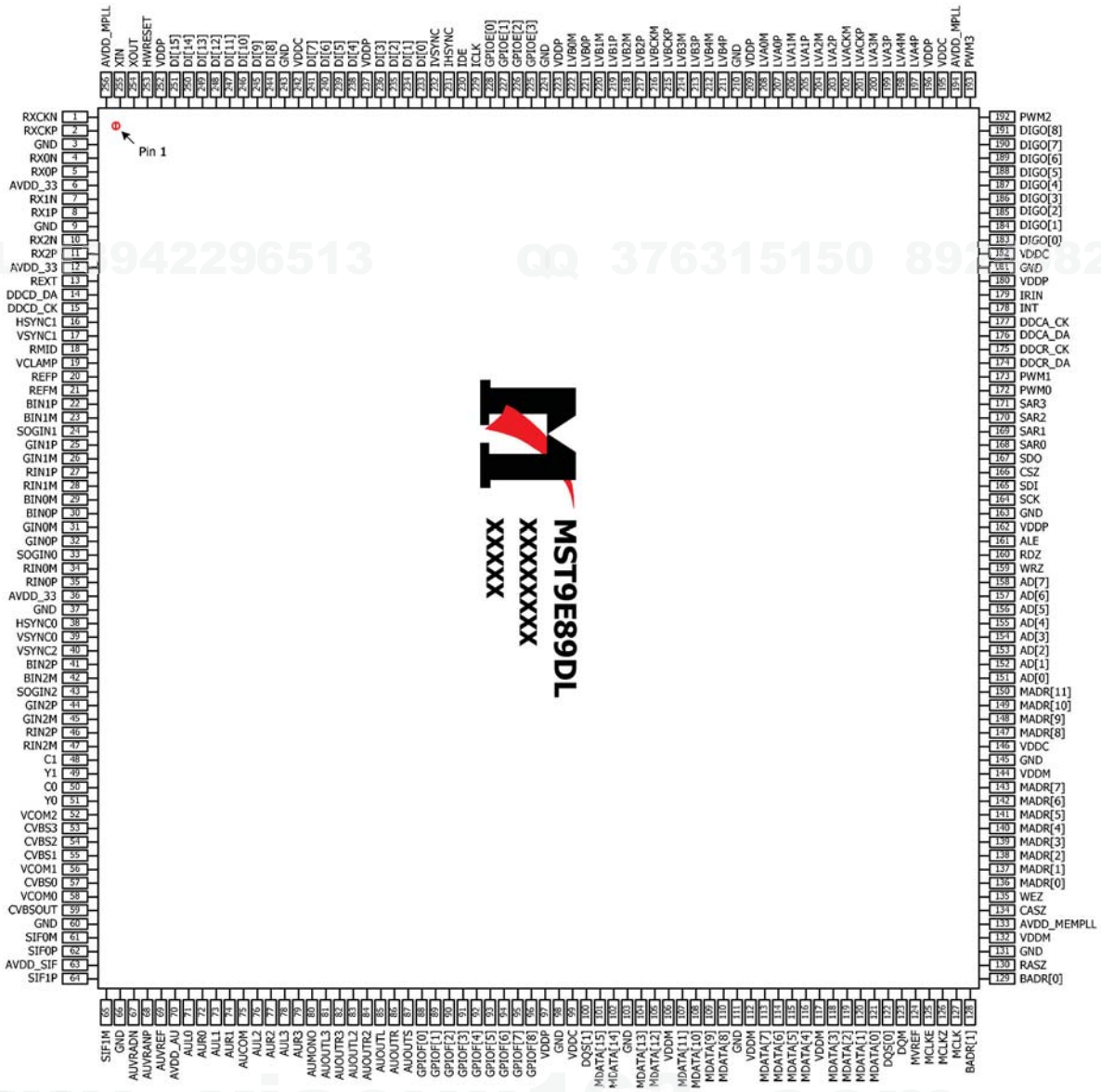

2. TDA4470

Block Diagram

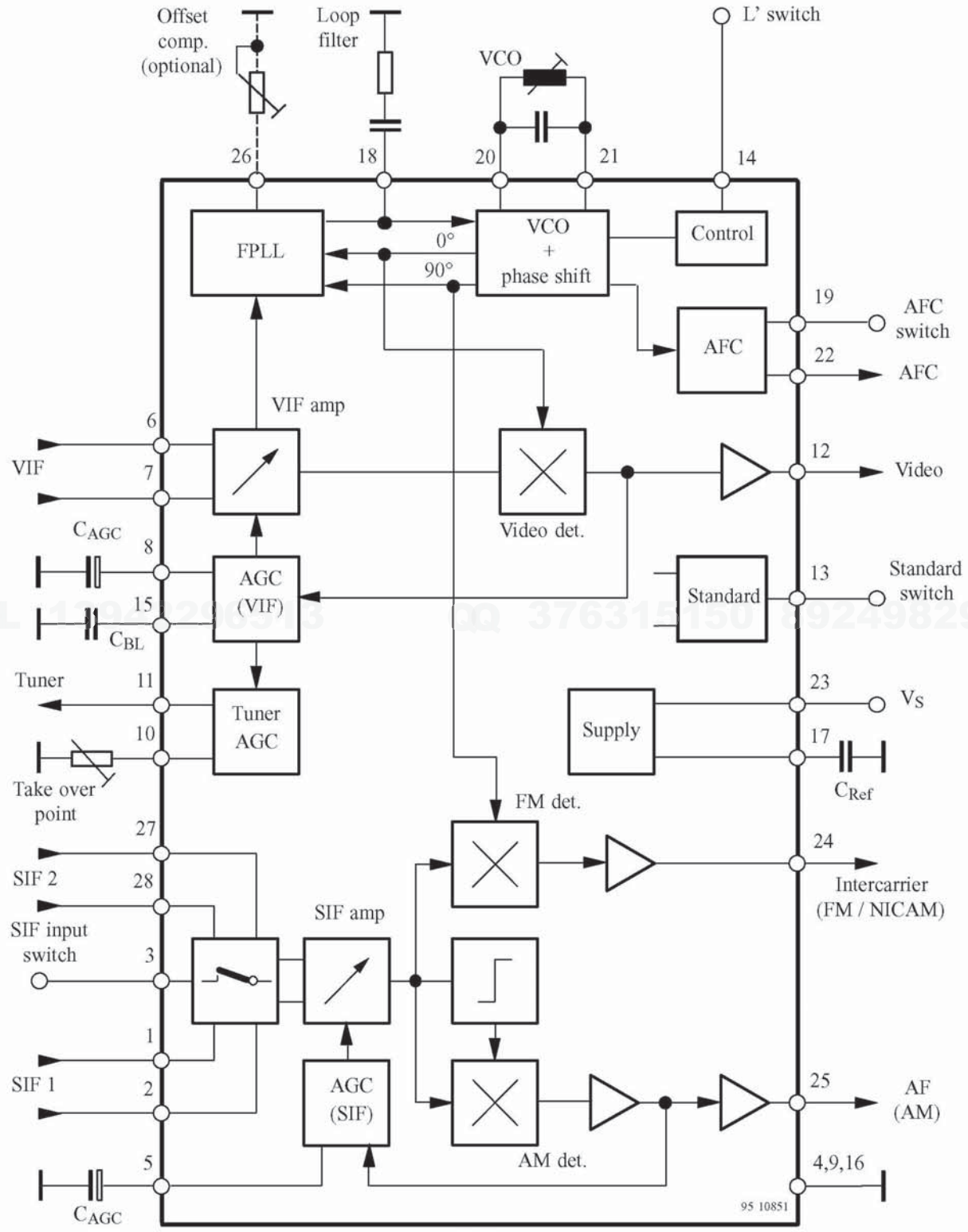

Figure 1. Block diagram

www.xiaoyu163.com

Pin Description

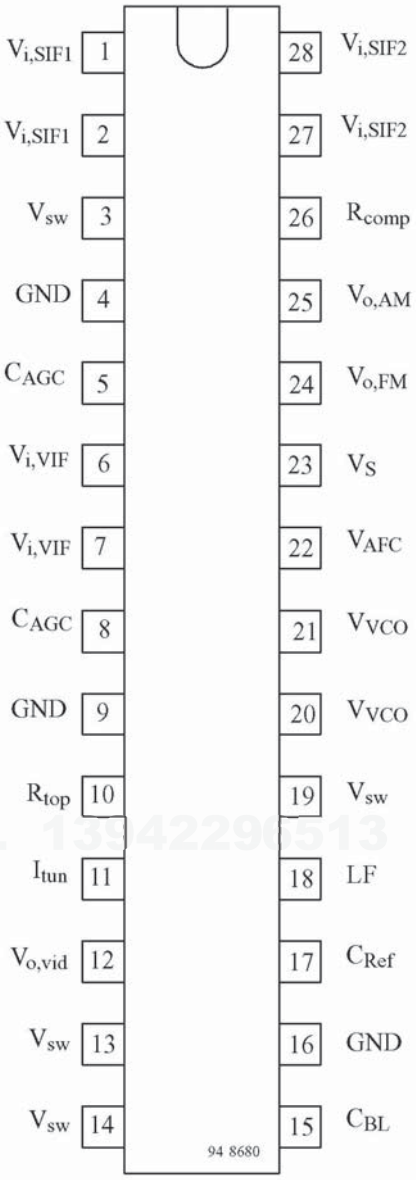

Figure 2. Pinning

Pin	Symbol	Function
1, 2	$V_{i, SIF1}$	SIF1 input (symmetrical)
3	V_{sw}	Input selector switch
4, 9, 16	GND	Ground
5	C_{AGC}	SIF-AGC (time constant)
6, 7	$V_{i, VIF}$	VIF input (symmetrical)
8	C_{AGC}	VIF-AGC (time constant)
10	R_{top}	Take over point, tuner AGC
11	I_{tun}	Tuner AGC output current
12	$V_{o,vid}$	Video output
13	V_{SW}	Standard switch
14	V_{SW}	L' switch
15	C_{bl}	Black level capacitor
17	C_{ref}	Internal reference voltage
18	LF	Loop filter
19	V_{sw}	AFC switch
20, 21	V_{VCO}	VCO circuit
22	V_{AFC}	AFC output
23	V_S	Supply voltage
24	$V_{O, FM}$	Intercarrier output
25	$V_{O, AM}$	AF output – AM sound
26	R_{comp}	Offset compensation
27, 28	$V_{i, SIF2}$	SIF 2 input (symmetrical)

3. TPA3120D2

The TPA3120D2 is a 20-W (per channel) efficient, Class-D audio power amplifier for driving stereo single ended speakers or mono bridge tied load. The TPA3120D2 can drive stereo speakers as low as 4Ω. The efficiency of the TPA3120D2 eliminates the need for an external heat sink when playing music.

The gain of the amplifier is controlled by two gain select pins. The gain selections are 20, 26, 32, 36 dB.

The outputs are fully protected against shorts from GND to ROUT or LOUT and output-to-output shorts with an auto recovery feature.

www. xiaoyu163. com

PWP (TSSOP) PACKAGE
(TOP VIEW)

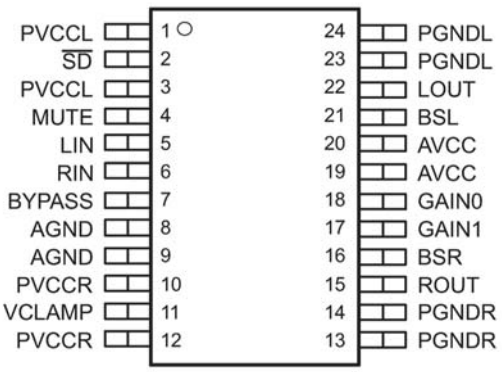

JD (DIP) PACKAGE
(TOP VIEW)

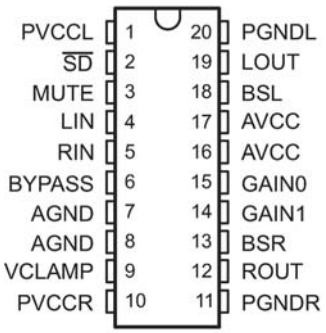

TERMINAL FUNCTIONS

TERMINAL			I/O	DESCRIPTION
NAME	24-PIN (PWP)	20-PIN (DIP)		
$\overline{SD}$	2	2	I	Shutdown signal for IC (low = disabled, high = operational) TTL logic levels with compliance to AVCC.
RIN	6	5	I	Audio input for right channel.
LIN	5	4	I	Audio input for left channel.
GAIN0	18	15	I	Gain select least significant bit. TTL logic levels with compliance to AVCC.
GAIN1	17	14	I	Gain select most significant bit. TTL logic levels with compliance to AVCC.
MUTE	4	3	I	Mute signal for quick disable/enable of outputs (high = outputs disabled, low = outputs enabled). TTL logic levels with compliance to AVCC.
BSL	21	18	I/O	Bootstrap I/O for left channel.
PVCCL	1, 3	1	—	Power supply for left channel H-bridge, not internally connected to PVCCR or AVCC.
LOUT	22	19	O	Class-D 1/2-H-bridge positive output for left channel.
PGNDL	23, 24	20	—	Power ground for left channel H-bridge.
VCLAMP	11	9	—	Internally generated voltage supply for bootstrap capacitors.
BSR	16	13	I/O	Bootstrap I/O for right channel.
ROUT	15	12	O	Class-D 1/2-H-bridge negative output for right channel.
PGNDR	13, 14	11	—	Power ground for right channel H-bridge.
PVCCR	10, 12	10	—	Power supply for right channel H-bridge, not connected to PVCCL or AVCC.
AGND	9	8	—	Analog ground for digital/analog cells in core.
AGND	8	7	—	Analog Ground for analog cells in core.
BYPASS	7	6	O	Reference for pre-amplifier inputs. Nominally equal to $V_{CC}/8$. Also controls start-up time via external capacitor sizing.
AVCC	19, 20	16, 17	—	High-voltage analog power supply. Not internally connected to PVCCR or PVCCL

www.xiaoyu163.com

Wiring diagram

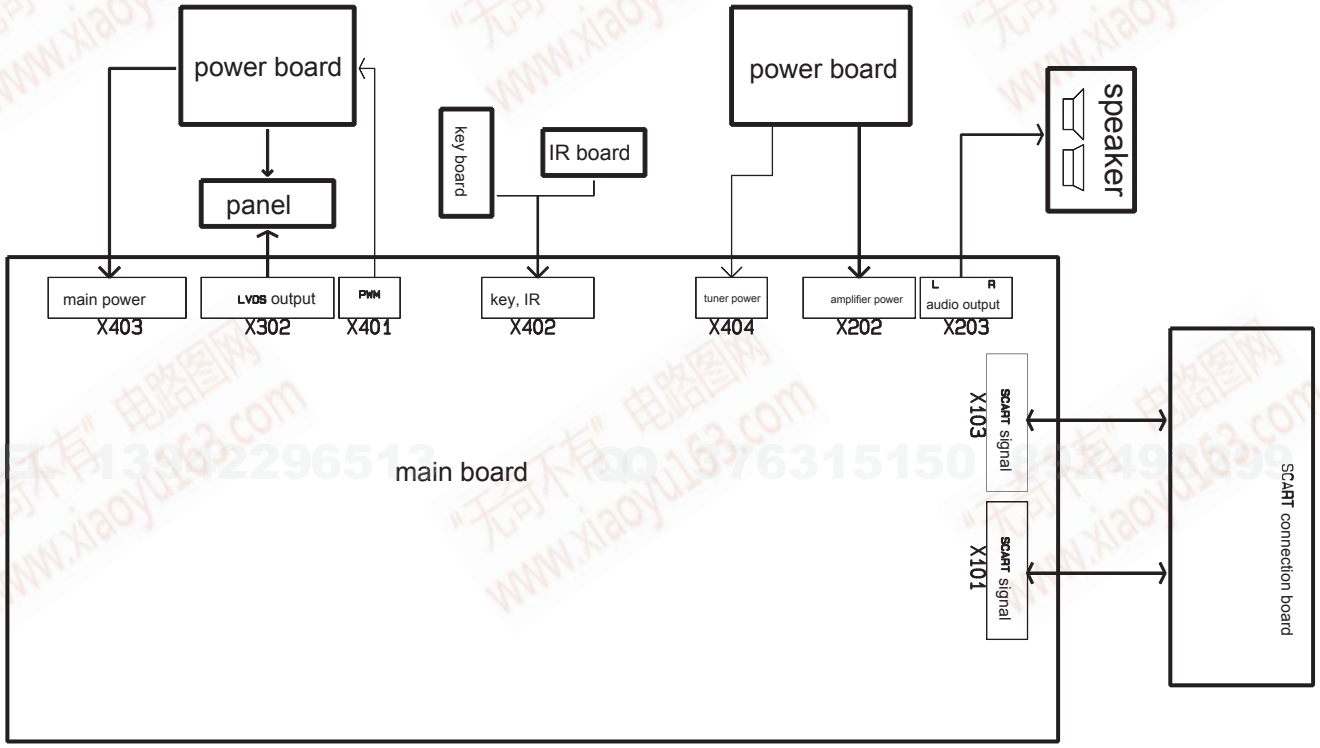

www.xiaoyu163.com

Trouble shooting

1. Fault clearance

Before servicing please check to find the possible causes of the troubles according to the table below.

1.1 Antenna (signal):

Picture is out of focus or jumping	● Bad status in signal receiving ● Poor signal ● Check if there are failures with the electrical connector or the antenna. ● Check if the antenna is properly connected.
Fringe in picture	● Check if the antenna is correctly oriented. ● Maybe there is electric wave reflected from hilltop or building.
Picture is interfered by stripe shaped bright spots	● Possibly due to interference from automobile, train, high voltage transmission line, neon lamp etc. ● Maybe there is interference between antenna and power supply line. Please try to separate them in a longer distance. ● Maybe the shielded-layer of signal wire is not connected properly to the connector.
There appear streaks or light color on the screen	● Check if interfered by other equipment and if interfered possibly by the equipment like transmitting antenna, non-professional radio station and cellular phone.

1.2 TV set:

Symptoms	Possible cause
Unable to switch the power on	● Check to see if the power plug has been inserted properly into the socket.
No picture and sound	● Check to see if the power supply of liquid crystal TV has been switched on. (As can be indicated by the red LED at the front of the TV set) ● See if it's receiving the signal that is transmitted from other source than the station ● Check if it's connected to the wrong terminal or if the input mode is correct. ● Check if the signal cable connection between video frequency source and the liquid crystal TV set is correct.
Deterioration of color phase or color tone	● Check if all the picture setups have been corrected.
Screen position or size is not proper	● Check is the screen position and size is correctly set up.
Picture is twisted and deformed	● Check to see if the picture-frame ratio is properly set up.
Picture color changed or colorless	● Check the "Component" or "RGB" settings of the liquid crystal TV set and make proper adjustment according to the

	signal types.
Picture too bright and there is distortion in the brightest area	● Check if the contrast setting is too high. ● Possibly the output quality of DVD broadcaster is set too high. ● It maybe also due to improper terminal connection of the video frequency signal in a certain position of the system.
Picture is whitish or too bright in the darkest area of the picture	● Check if the setting for the brightness is too high ● Possibly the brightness grade of DVD player (broadcaster) is set too high.
No picture or signal produced from the displayer if “XXX in search” appears.	● Check if the cable is disconnected. ● Check if it’s connected to the proper terminal or if the input mode is correct.
There appears an indication - “outside the receivable scope)	● Check if the TV set can receive input signal. The signal is not correctly identified and VGA format is beyond the specified scope.
Remote control cannot work properly	● Check if the batteries are installed in the reverse order. ● Check if the battery is effective. ● Check the distance or angle from the monitor. ● Check if there is any obstruct between the remote control and the TV set. ● Check if the remote control signal- receiving window is exposed to strong fluorescence.
No picture and sound, but only hash.	● Check if the antenna cable is correctly connected, or if it has received the video signal correctly.
Blur picture	● Check if the antenna cable is correctly connected. ● Of if it has received the right video signal.
No sound	● Check if the “mute” audio frequency setting is selected. ● Check if the sound volume is set to minimum. ● Make sure the earphone is not connected. ● Check if the cable connection is loose.
When playing VHS picture search tape, there are lines at the top or bottom of the picture.	● When being played or in pause VHS picture search tape sometimes can’t provide stable picture, which may lead to incorrect display of the liquid crystal TV, In this case please press “auto” key on the remote control so as to enable the liquid crystal TV set to recheck the signal and then to display correct picture signal

www.xiaoyu163.com

2. Troubleshooting guide

2.1. No raster

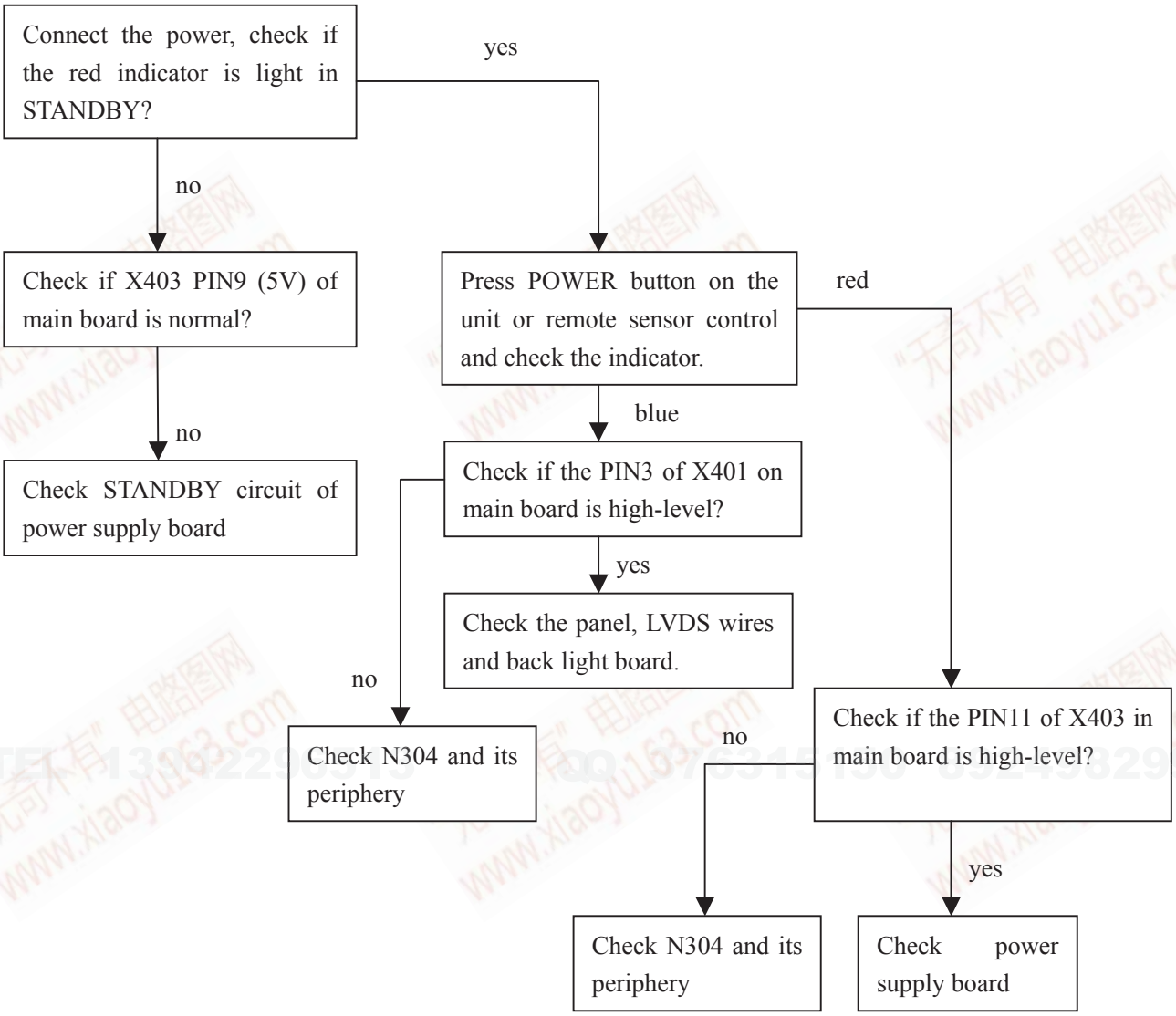

www.xiaoyu163.com

2.2. Have raster, but no picture

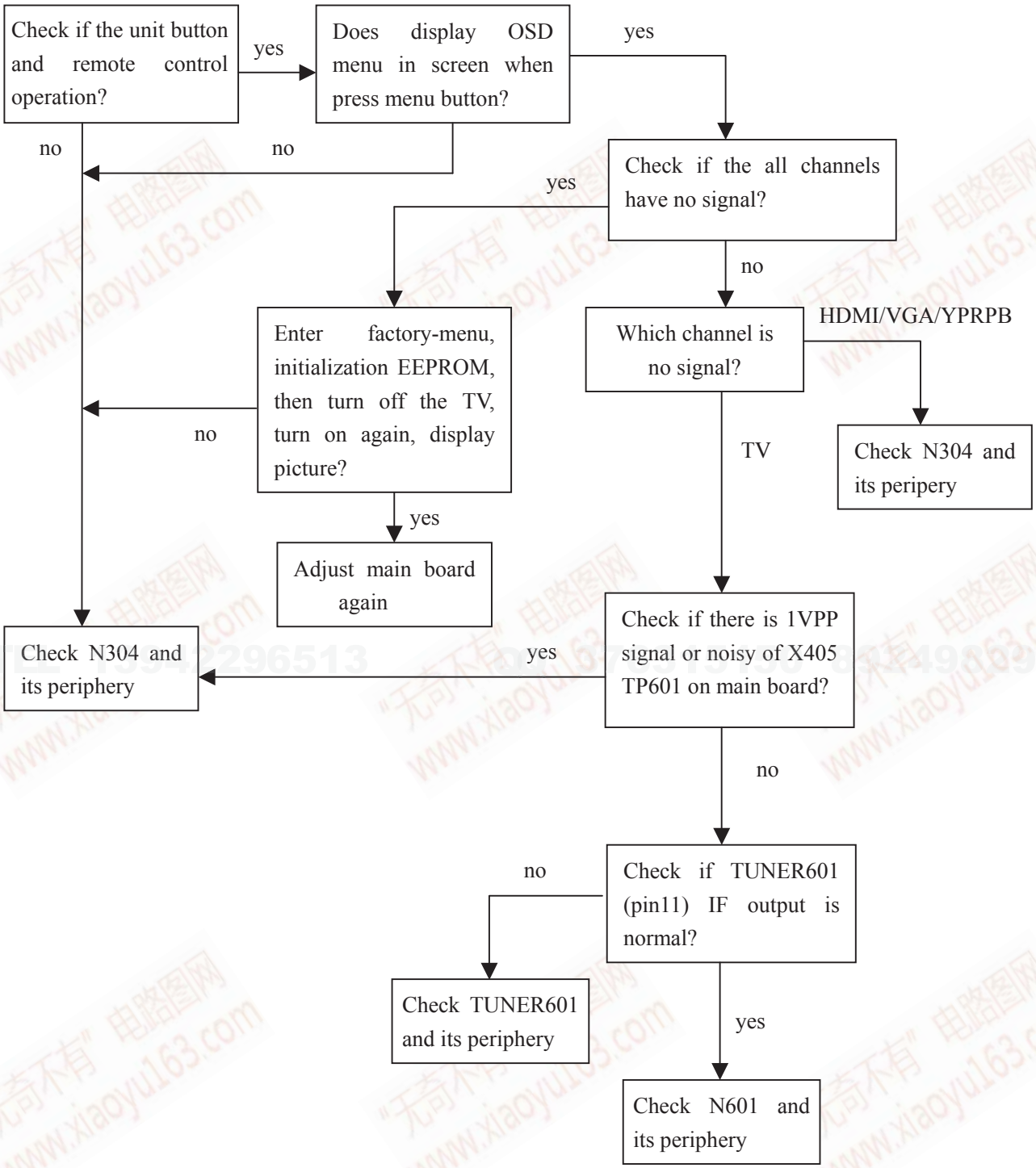

www.xiaoyu163.com

2.3. No sound

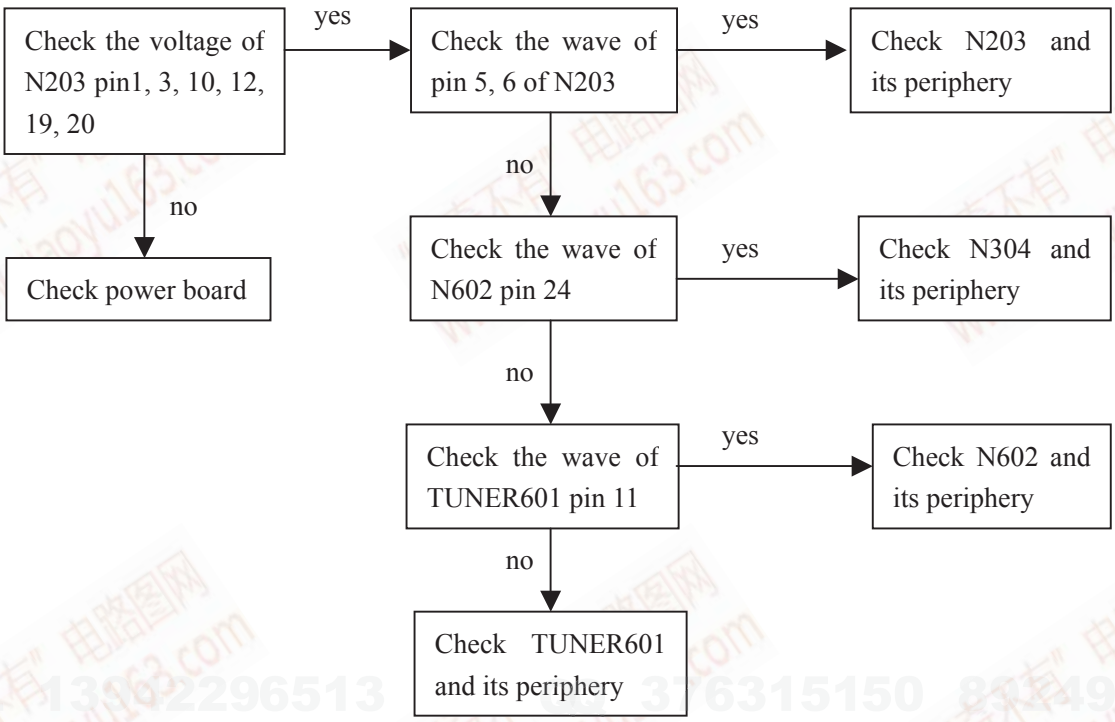

www.xiaoyu163.com

QQ 376315150 892498299

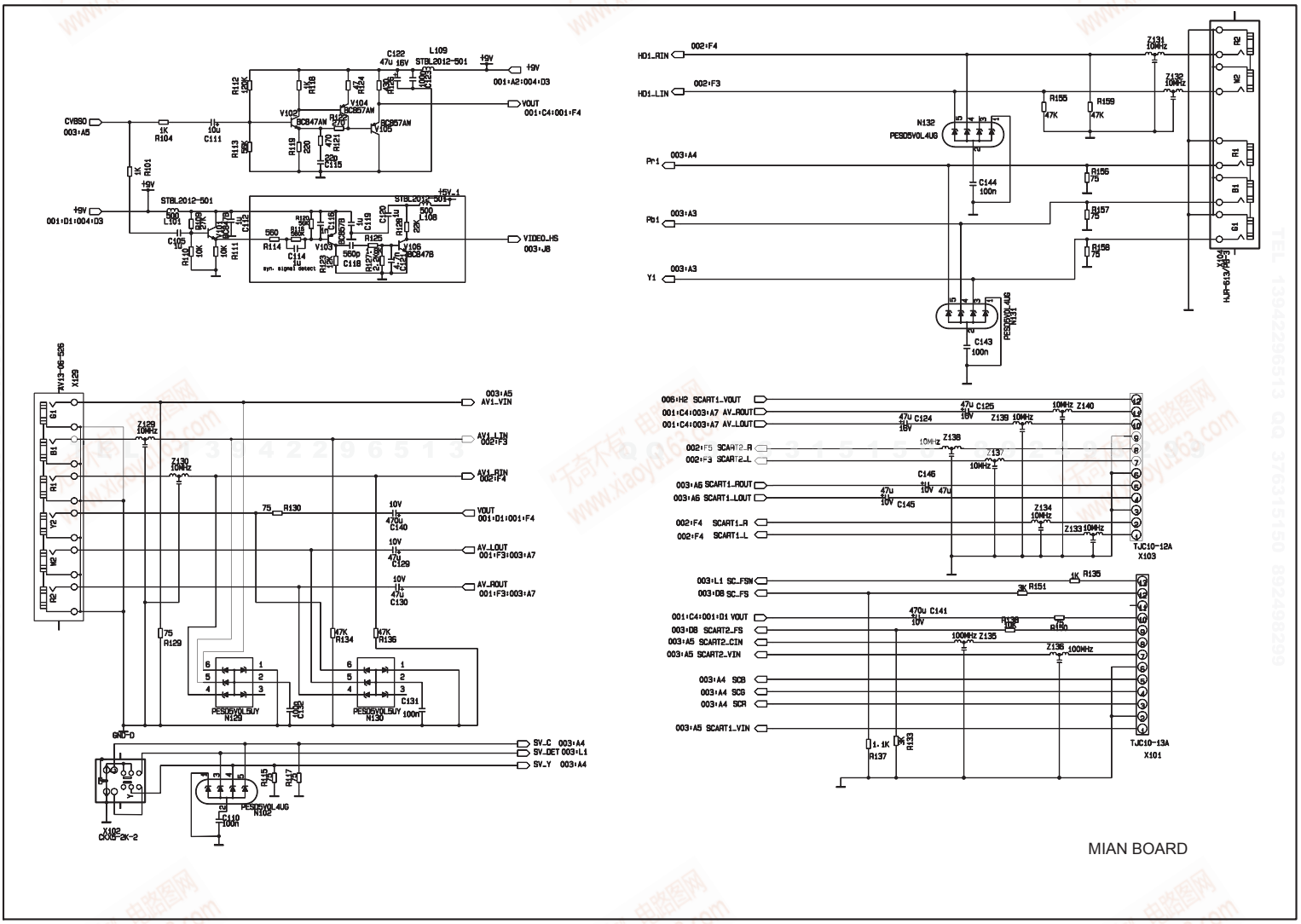

www.xiaoyu163.com

QQ 376315150 892498299

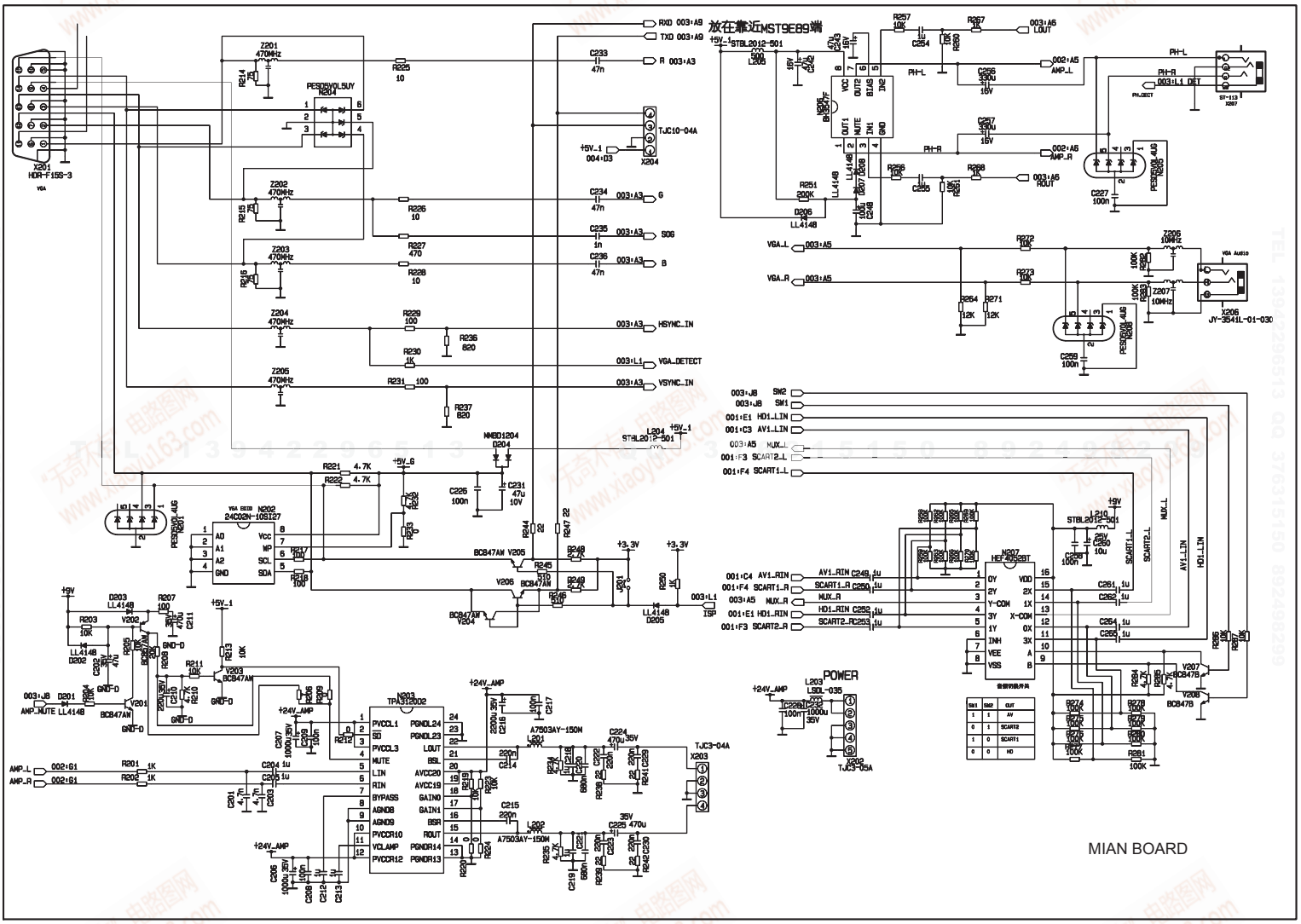

www.xiaoyu163.com

QQ 376315150 892498299

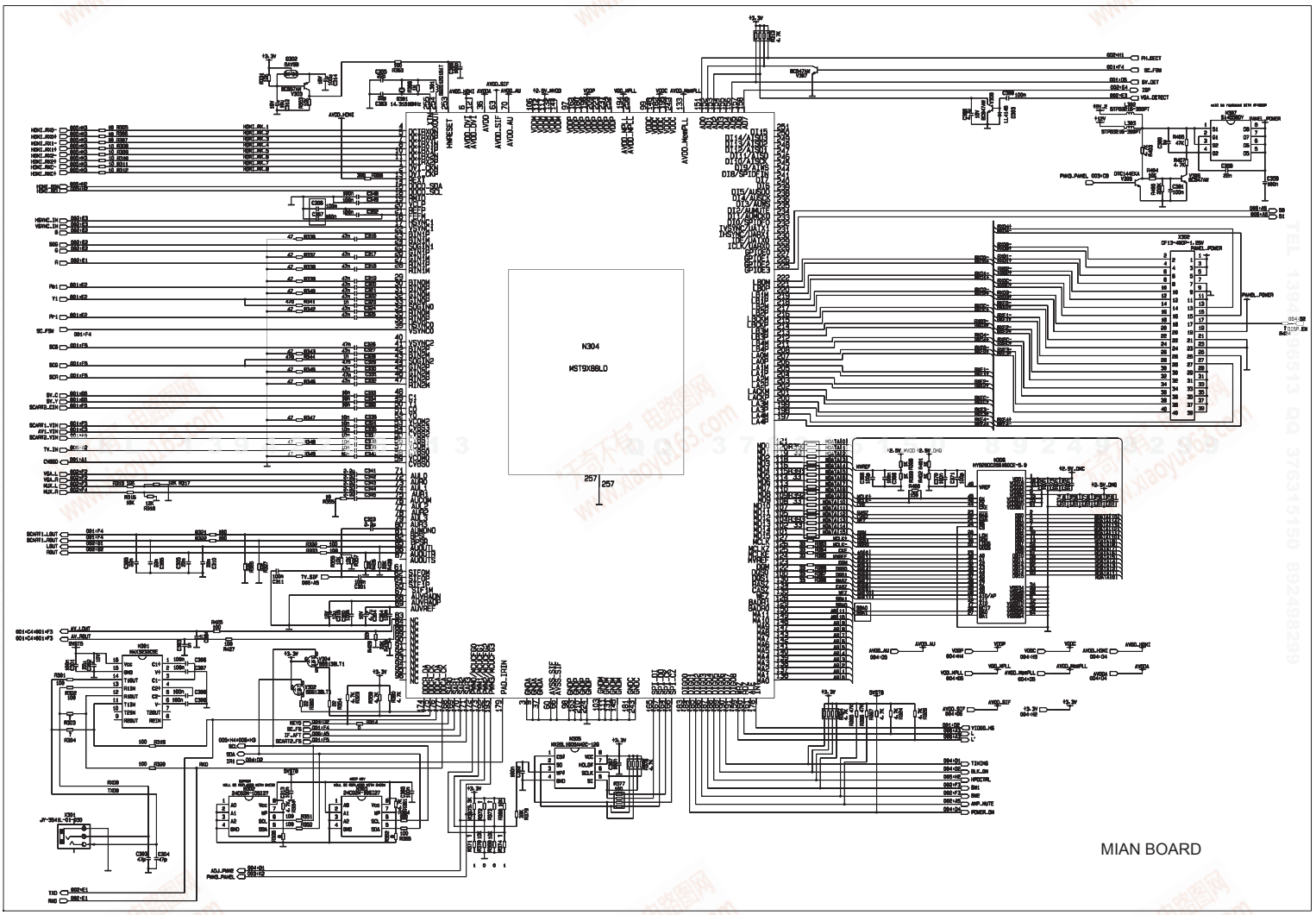

www.xiaoyu163.com

QQ 376315150 892498299

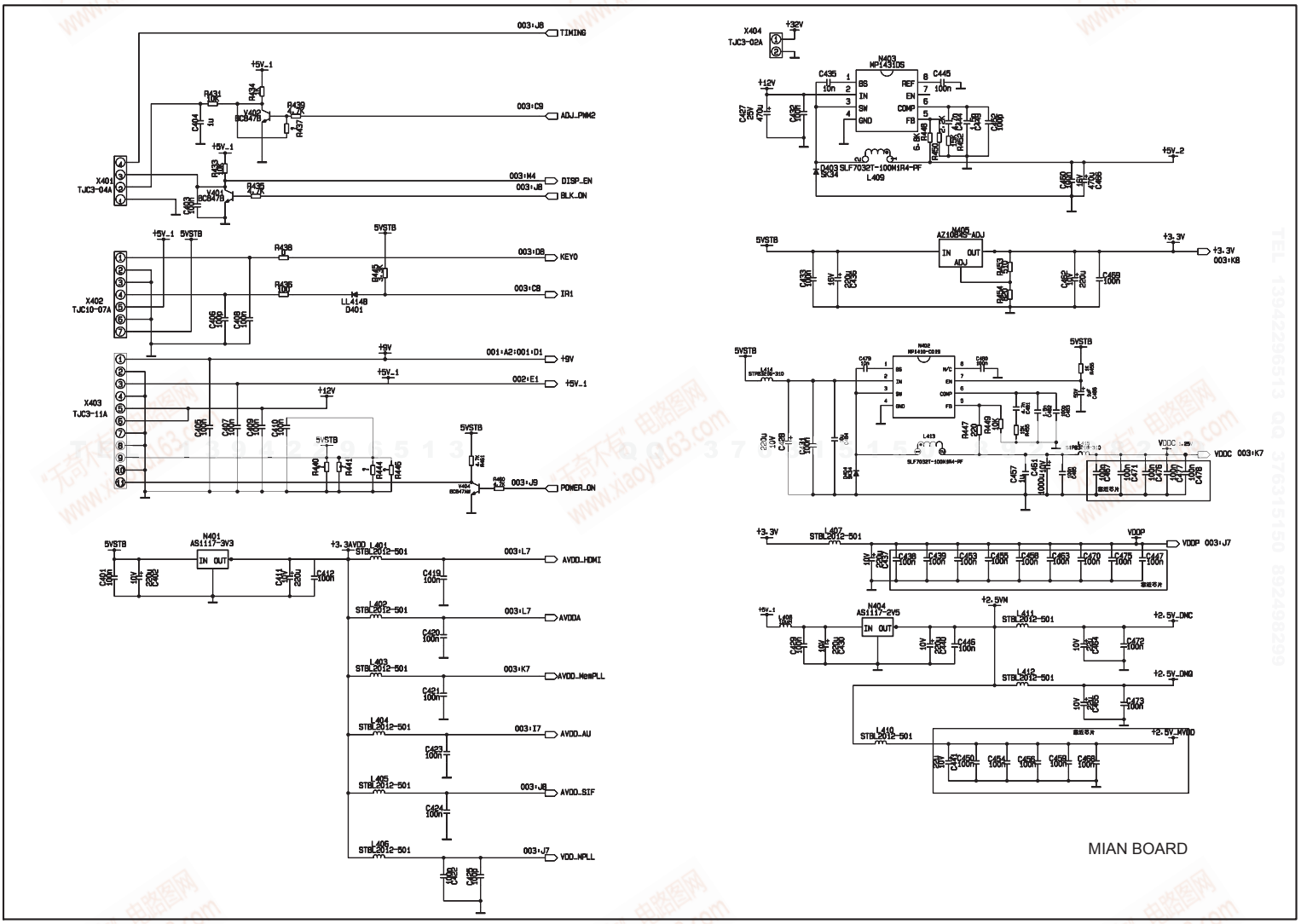

www.xiaoyu163.com

QQ 376315150 892498299

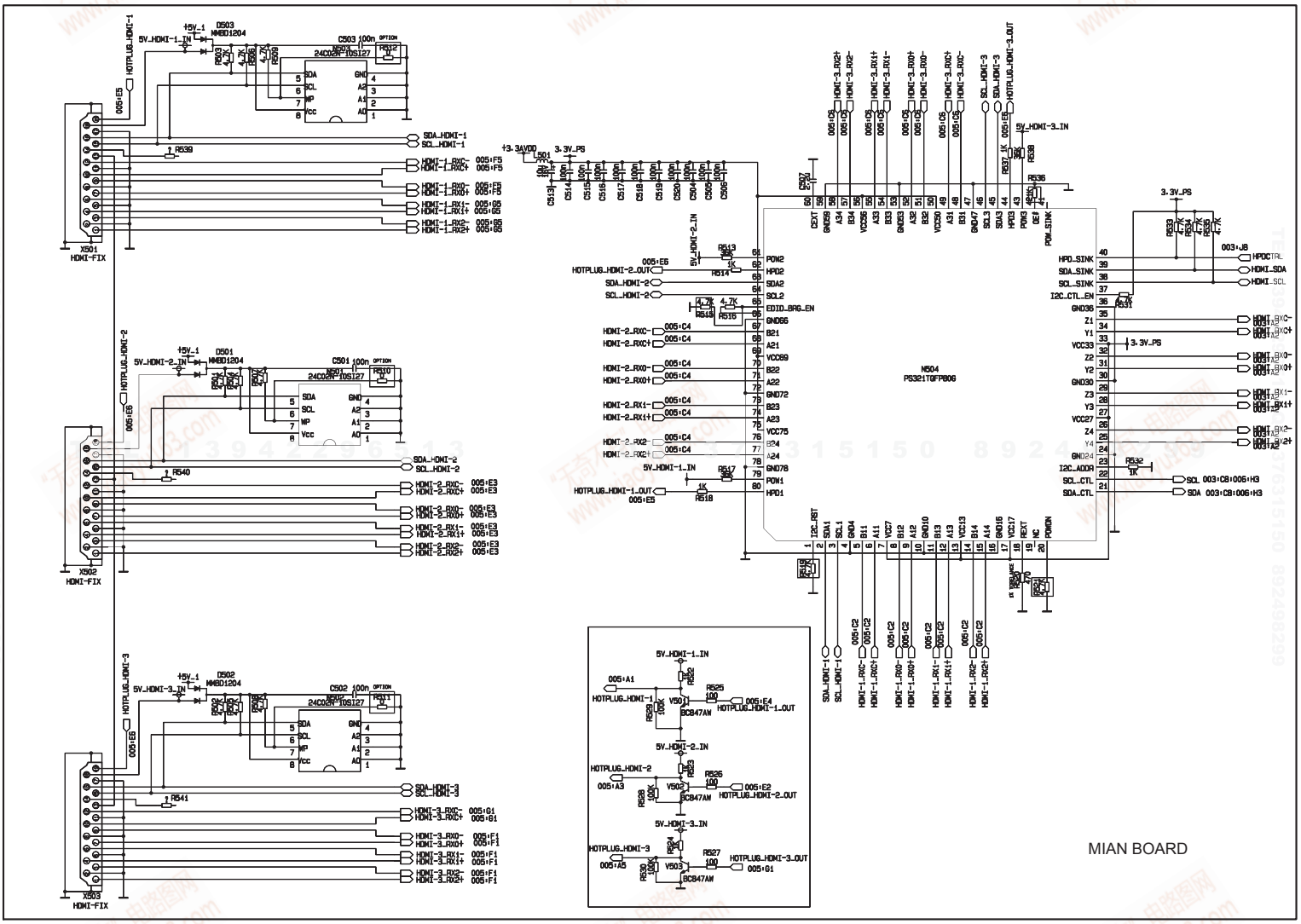

www.xiaoyu163.com

QQ 376315150 892498299

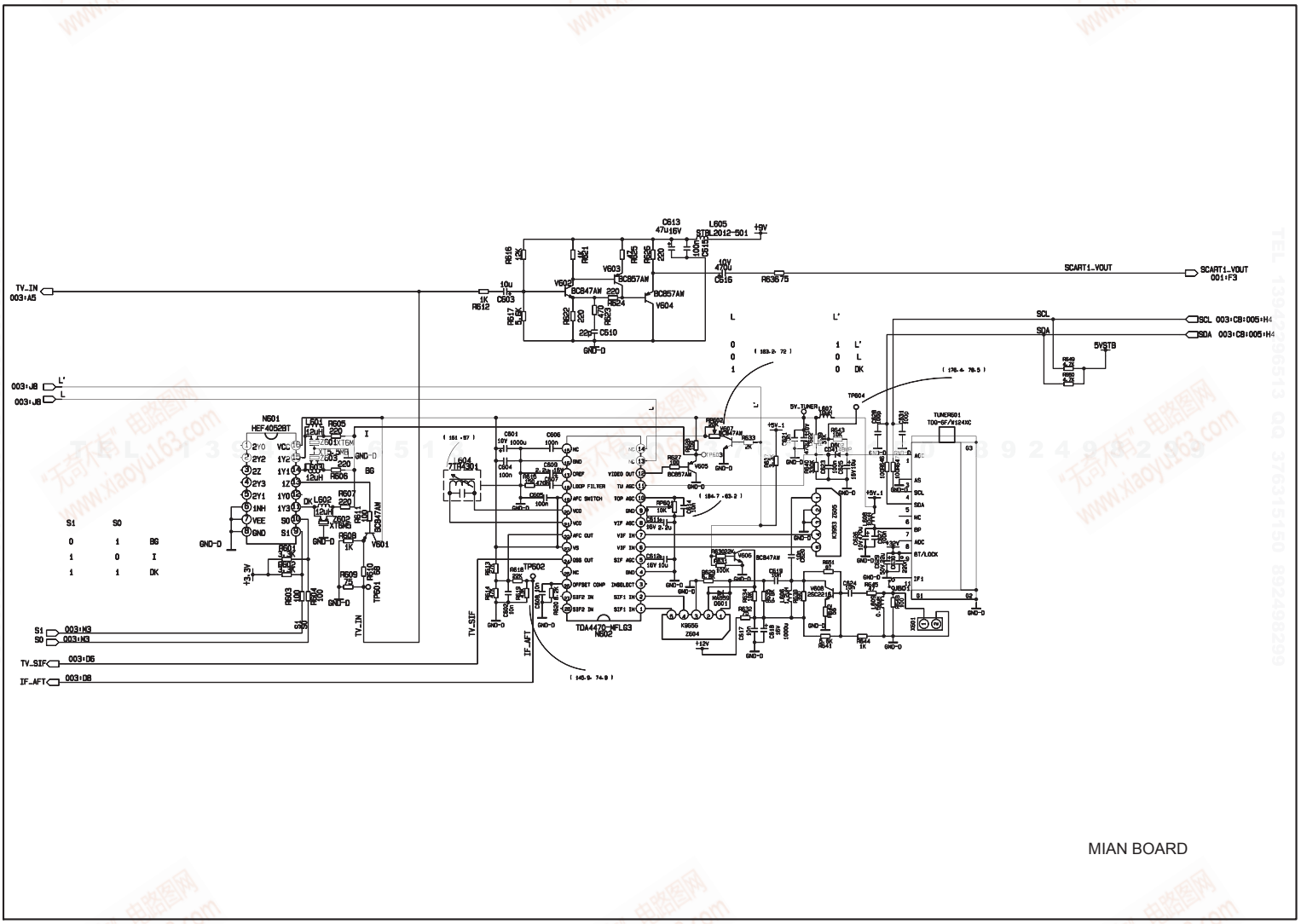

MIAN BOARD

www.xiaoyu163.com

QQ 376315150 892498299

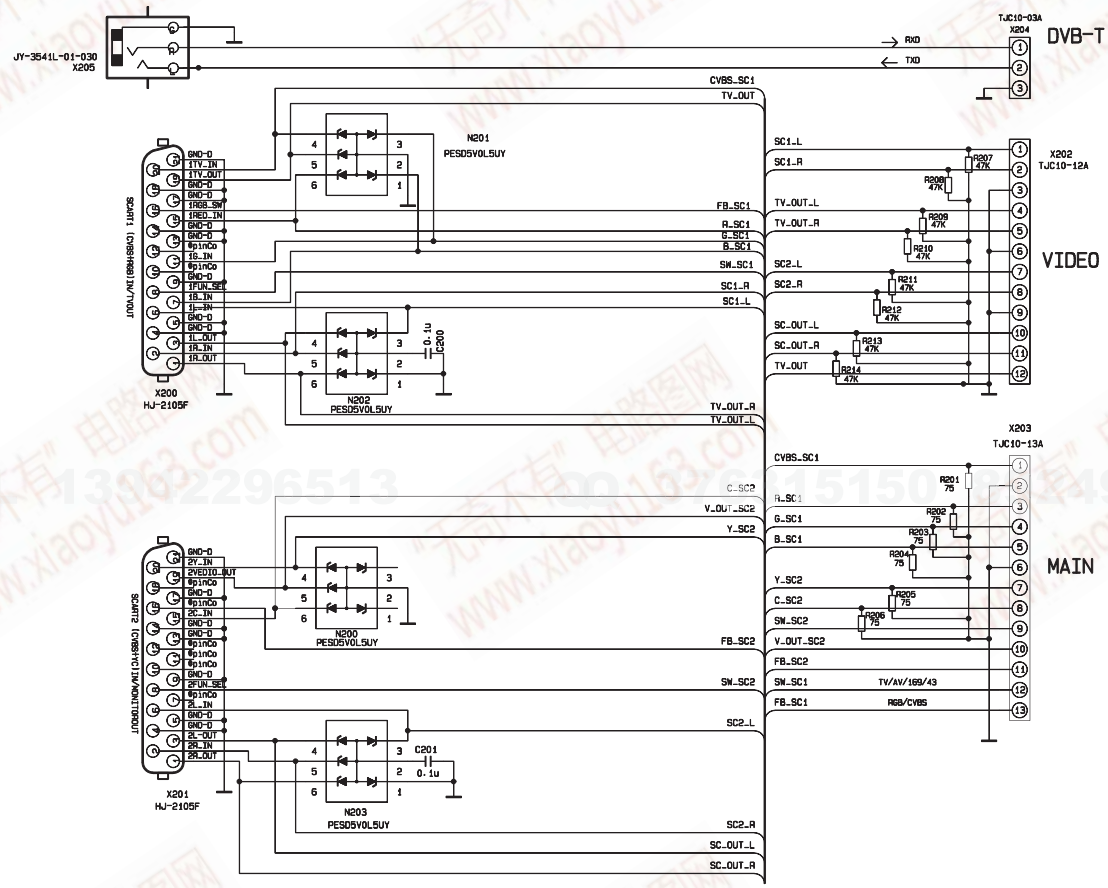

INTERFACE CONNECTION

www.xiaoyu163.com

QQ 376315150 8924982299

TJC10-02AWT

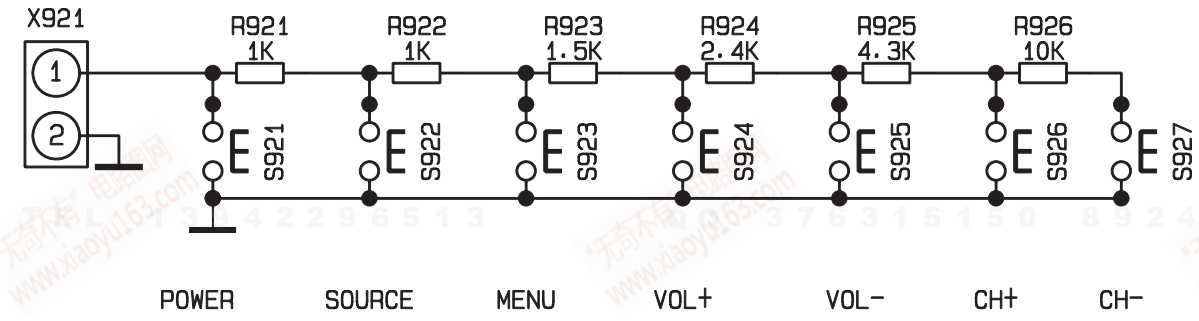

KEY

www.xiaoyu163.com

QQ 376315150 892498299

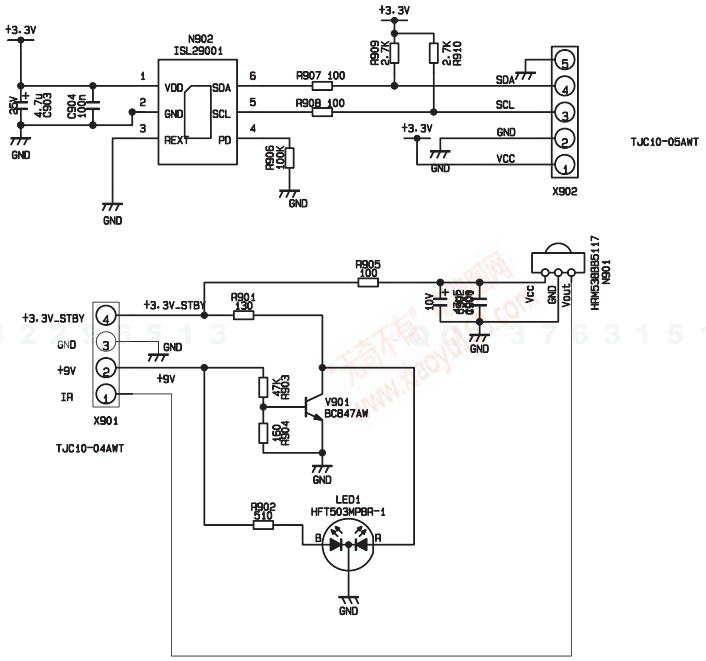

IR

www.xiaoyu163.com

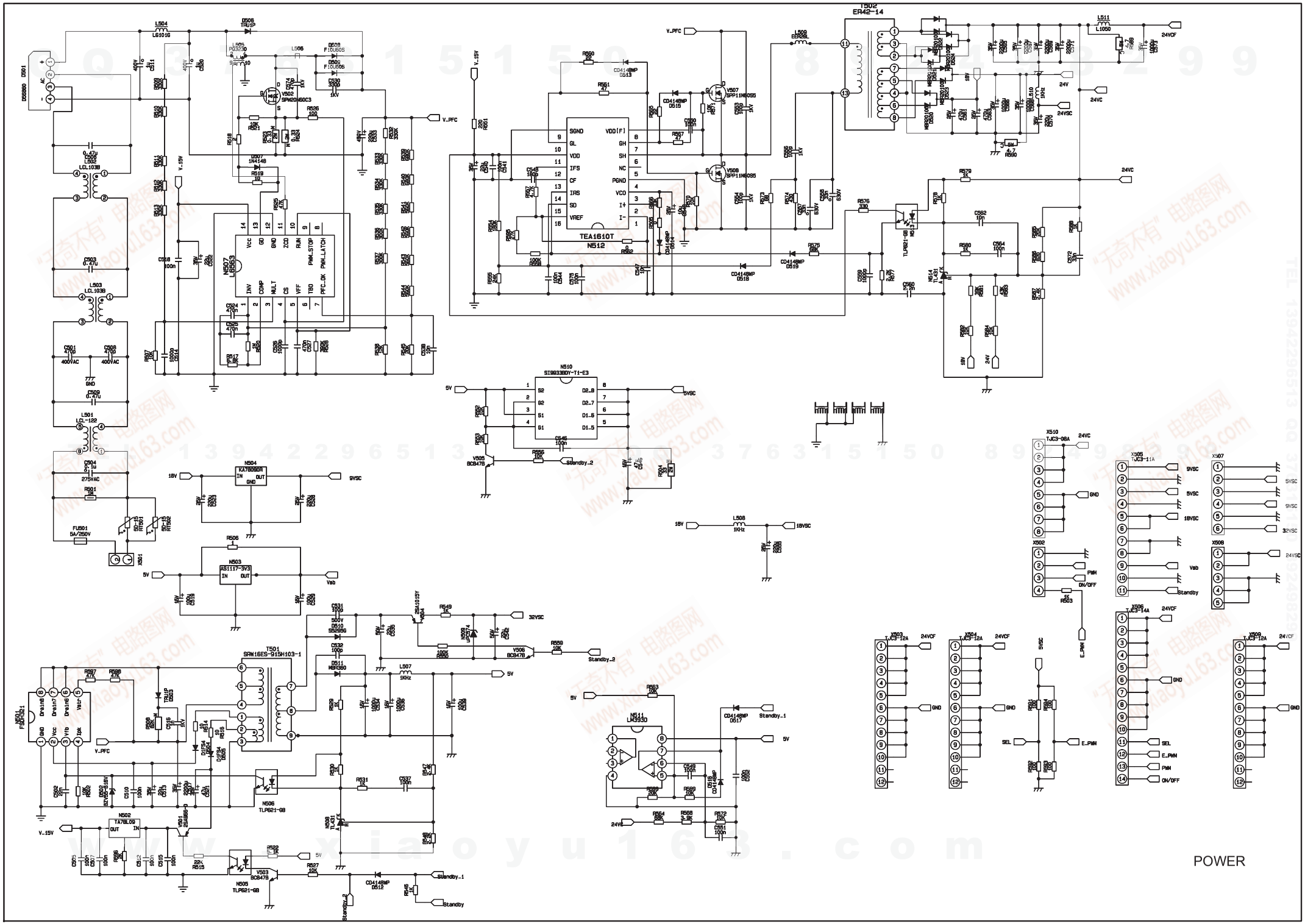
POWER
TEA1610T
N512
T502
ER42-14
N510
SI9933BDY-T1-E3
N504
KA78090R
N503
AS1117-3V3
T501
SRM16ES-915H103-1
N511
LM393D
N502
TA78L09
N505
TLP621-GB
N506
TLP621-GB
N507
L6563
N508
TL431
N509
TL431
N514
TL431
N501
FSDR321
X501
X502
X503
X504
X505
X506
X507
X508
X509
X510
TJC3-08A
TJC3-11A
TJC3-12A
TJC3-14A
V502
SPW20N60C3
V503
BC847B
V505
BC847B
V506
BC847B
V507
SPP11N60S5
V508
SPP11N60S5
V509
BC847B
V510
BC847B
V501
2SA1015Y
V504
2SA1015Y
V_PFC
V_15V
Standby_1
Standby_2
Standby
24VCF
24VC
24VSC
18VSC
9VSC
5VSC
32VSC
Vsb
E_PWM
PWM
ON/OFF
SEL
GND

APPENDIX-A: Main assembly 9247HK3613 LCD-47XR9KH

NAME	NO.	MAIN COMPONENT AND IT'S NO.	
Main board	XI6HK02001A0	N304 N602 N203	MST9E89DL (5270989005) TDK4470MFL (5274470001) TPA3120-D2 (5273120001)
SCART connection board	XI6FY0064610		
Key board	XI6FY0240510		
IR board	XI6FY01609A0		
Power board	XI6HU0422010		
Remote control	XI6010Y06006	RC-Y60-0F	
Panel	XI5203478504	V470H1-L08	

www.xiaoyu163.com

APPENDIX-B: Exploded view (LCD-47XR9KH)

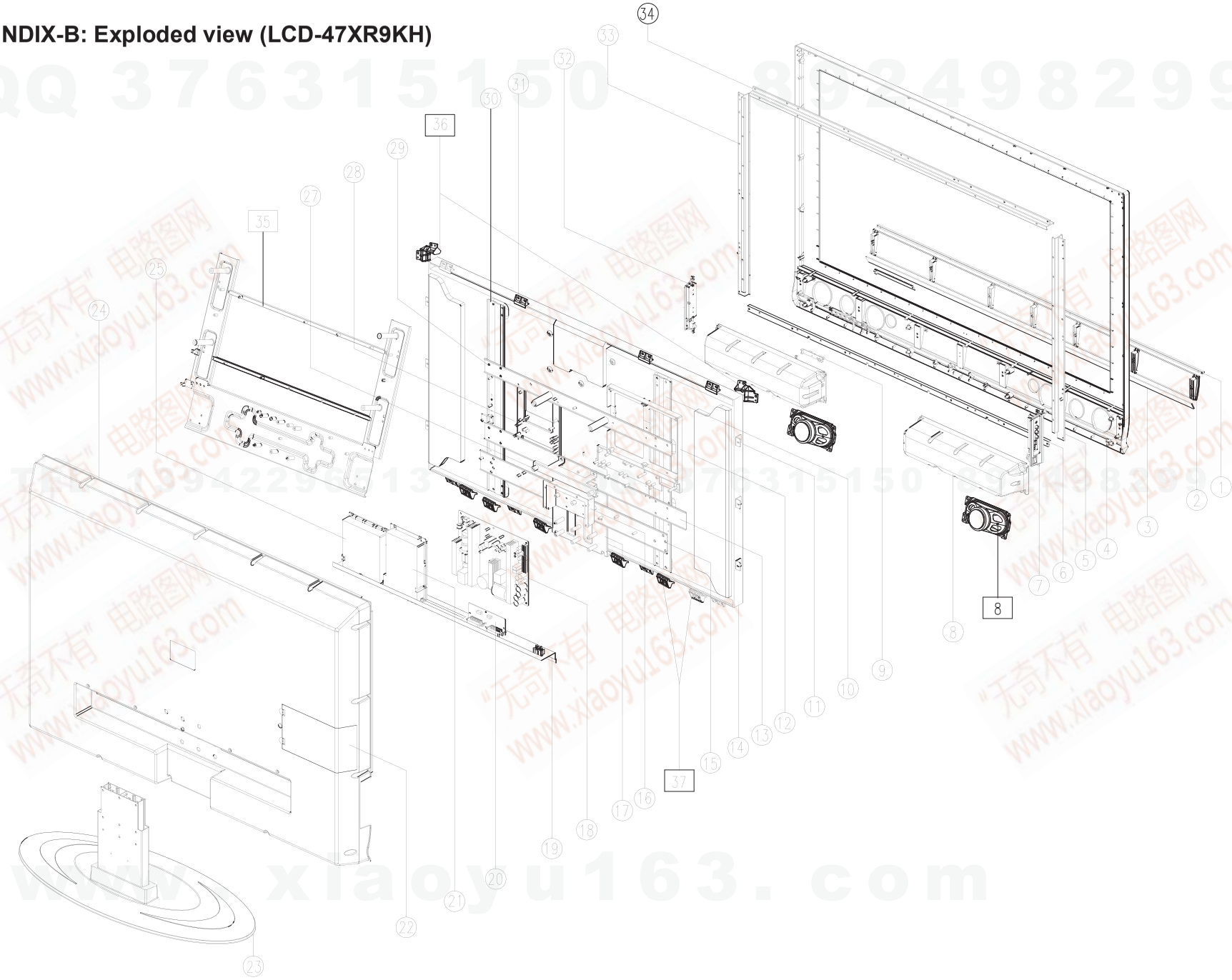

PART LIST OF EXPLODED VIEW

REF.No.	DESCRIPION
1	Front cabinet decrorative bar
2	Speaker net
3	Decrorative bar
4	Front cabinet
5	Front cabinet fixed bar(right)
6	Front cabinet fixed bar(down)
7	Side AV interface board
8	Speaker
9	IR board
10	Panel holder(right)
11	Panel pressing block(left & right)
12	Power board bracket
13	Panel holder(middle)
14	Panel
15	Panel holder(down)
16	Standing pole baffIle
17	Standing pole bracket
18	Power board
19	Interface baffel (down)
20	Connective board
21	Video processing board
22	Back cabinet cover board(right)
23	Pedestal
24	Back cabinet
25	Main board
26	DVB-T digital board
27	Wall-mounting bracket
28	Digital board bracket
29	Panel holder(up)
30	Panel holder(left)
31	Panel pressing block(up)
32	Key board
33	Front cabinet fixed bar(left)
34	Front cabinet fixed bar(up)
35	Panel holder
36	Panel pressing block(coner)
37	Panel pressing block(down)

www.xiaoyu163.com

PART LIST

LCD-47XR9KH ver.1.0

REF.No.	PARTS No.	DESCRIPION	Q'TY	REMARK
1	XI573C276010	Front cabinet decrorative bar	1	
2	XI615CA82010	Speaker net	1	
3	XI585042201B	Decrorative bar	1	
4	XI5Q336W105B	Front cabinet	1	
5	XI58F0A29500	Front cabinet fixed bar(right)	——	not used in the unit
6	XI58F0029400	Front cabinet fixed bar(down)	——	not used in the unit
7	XI6FY01629A0	Side AV interface board	1	
8	XI5501006016	Speaker	2	
9	XI6FY0160910	IR board	1	
10	XI58A0A55200	Panel holder(right)	——	not used in the unit
11	XI5932086000	Panel pressing block(left & right)	4	
12	XI58B0Q31610	Power board bracket	——	not used in the unit
13	XI58A0E57300	Panel holder(middle)	——	not used in the unit
14	XI5203478504	Panel	1	
15	XI58A0M56000	Panel holder(down)	——	not used in the unit
16	XI58B0A27100	Standing pole baffIle	1	
17	XI58A0C5590A	Standing pole bracket	——	not used in the unit
18	XI6HU0422010	Power board	1	
19	XI5810W56000	Interface baffel (down)	1	
20	XI6FY0064610	Connective board	1	
21	XI6FY00540H0	Video processing board	——	not used in the unit
22	XI5830108710	Back cabinet cover board(right)	——	not used in the unit
23	XI6151126002	Pedestal	1	
24	XI5H336RI02A	Back cabinet	1	
25	XI6HK02001A0	Main board	1	
26	XI6FY0077510	DVB-T digital board	——	not used in the unit
27	XI58A0C5530A	Wall-mounting bracket	——	not used in the unit
28	XI58B0N31710	Digital board bracket	——	not used in the unit
29	XI58A0B6340A	Panel holder(up)	——	not used in the unit
30	XI58A0A5510A	Panel holder(left)	——	not used in the unit
31	XI5932087000	Panel pressing block(up)	4	
32	XI6FY0240510	Key board	1	
33	XI58F0029500	Front cabinet fixed bar(left)	——	not used in the unit
34	XI58F0029300	Front cabinet fixed bar(up)	——	not used in the unit
35	XI615318400B	Panel holder	1	
36	XI5932089000	Panel pressing block(coner)	2	
37	XI5932088000	Panel pressing block(down)	6	

- Only the parts in above list are used for repairing.
- Other parts except the above parts can't be supplied.

www.xiaoyu163.com

QQ 376315150 892498299

Assembly list of panel

Components	No.	Panel model
CMO Backlight board	60Z0000659	27-D023895(V470H1-L08)
CMO Logic board	60Z0000660	35-D025896(V470H1-L08)

Note: Specifications are subject to change without notice.

TEL 13942296513 QQ 376315150 892498299
www.xiaoyu163.com

WALL MOUNTING INSTRUCTIONS

Safety Precautions:

1. Be sure to ask an authorized service personnel to carry out setup.
2. Thoroughly read this instruction before setup and follow the steps below precisely.
3. The wall to be mounted should be made from solid materials. Only use accessories supplied by the manufacturer.
4. Very carefully handle the unit during setup. We are not liable for any damage or injury caused by mishandling or improper installation.
5. Be sure to place the unit on a stable and soft platform which is strong enough to support the unit.
6. Do not uplift the speaker when moving the display. The appearance of the unit may different from the actual ones.
7. Design and specifications are subject to change without notice.
8. Retain these instructions for future reference.

Note: All the wall mounting parts are optional and may be unavailable in your model.

Below we will show you how to mount the Display on the wall using our company's wall mounting components.

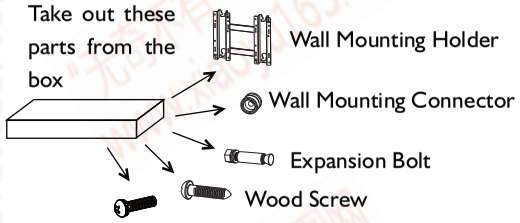

Fig.1

1. There are three options of wall mounting holder with different specifications :200200,200400,200600. Please check your wall mounting holder for its specification.

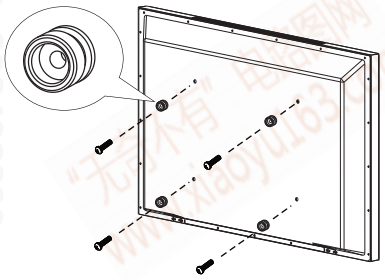

Fig.4

4. Use the 4pcs combination screws to fix the wall mounting connector to the rear of the display unit.(Caution:the direction of the connectors should be strictly confirm to the diagram illustrated above).

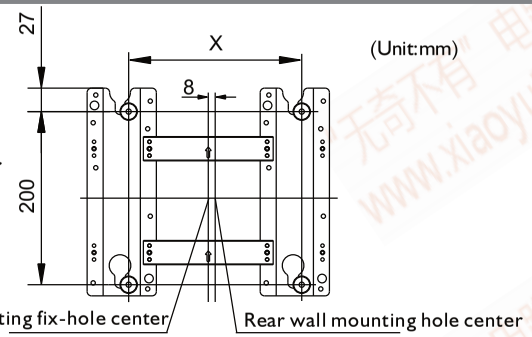

Fig.2

2. Due to the wall mounting fix-groove leaning to the right side, the whole unit will lean to right side after installation, please carefully measure the position of the holes you want to drill, refer to the parameters on Fig.2 when drilling the holes.

Note: The "X" in Fig.2 represents a data. It may be 200mm or 400mm or 600mm.

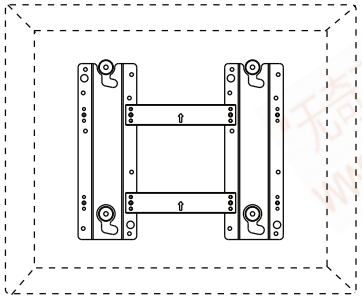

Fig.5

5. Put the back of the display unit close to the wall mounting holder, insert the four wall mounting connectors into the four calabash-shaped holes on the wall mounting holder. (Fig.5)

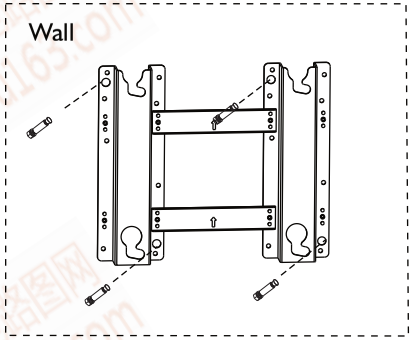

Fig.3a

3a. Screw 4pcs expansion bolts to fix the wall mounting holder on the wall.

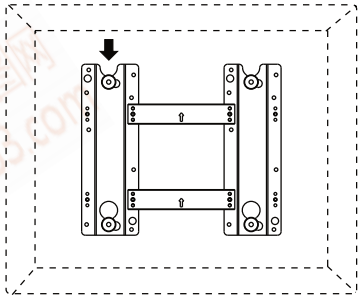

Fig.6

6. Let the display unit slowly slide down to the end of the calabash-shaped hole. (Fig.6)

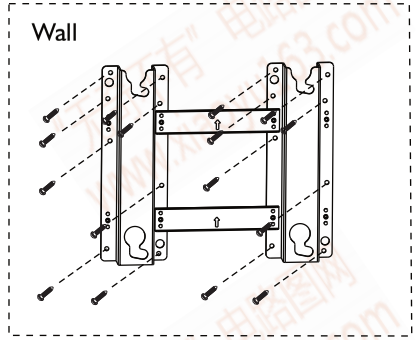

Fig.3b

3b. If your wall is a wooden structure, please fix the wall mounting holder on the wall with 16pcs wood screws.

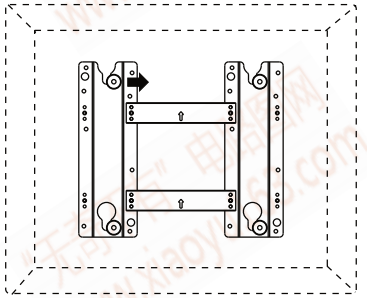

Fig.7

7. Push rightwards carefully until the wall mounting connectors fully slide into the right fix-grooves and be sure the mounting is secure.

8. If you want to dismount the unit do the above steps in reverse order.

QQ 376315150 892498299
TEL 13942296513 QQ 376315150 892498299
www.xiaoyu163.com

SANYO

OCT/2009

SANYO Electric Co., Ltd.