Haier SERVICE MANUAL

LED TV

MODEL No. 32E2000

⚠ WARNING

This service information is designed for experienced repair technicians only and is not designed for use by the general public.
It does not contain warnings or cautions to advise non-technical individuals of potential dangers in attempting to service a product.
Products powered by electricity should be serviced or repaired only by experienced professional technicians. Any attempt to service or repair the product or products dealt with in this service information by anyone else could result in serious injury or death.

Downloaded from www.Manualslib.com manuals search engine

Table of Contents

1. General Information 3
1-1. General Guidelines 3
1-2. Important Notice 3
1-3. How to Read this Service Manual 6
2. Specifications 7
3. Location of Controls and Components 8
3-1 Component Location 8
3-2 Main Board 8
3-3 LED Panel 11
4. Disassembly Procedures 12
5. Accessories 17
6. Installation Instructions 18
6-1 Power Connection 18
6-2 External Equipment Connections 19
7. Operation Instructions 25
7-1 Side Control 25
7-2 Rear Terminals 26
7-3 Using Remote Control 27
8. Electrical Parts 28
8-1 System Block Diagram 28
8-2 Circuit Diagram 29
8-3 Wiring Connection Diagram 35

Downloaded from www.Manualslib.com manuals search engine

9. Measurements and Adjustment 36
9-1 Operation Guide 36
9-2 Factory Mode 43
9-3 Software Update 44
9-4 Hotel Mode 44
10. Troubleshooting 45
10-1 Simple Check 46
10-2 Power supply 47
10-3 Display 49
10-4 Audio 50
10-5 Function 51

Downloaded from www.Manualslib.com manuals search engine

1. General Information

1-1. General Guidelines

When servicing, observe the original lead dress. If a short circuit is found, replace all parts which have been overheated or damaged by the short circuit.

After servicing, see to it that all the protective devices such as insulation barriers, insulation papers shields are properly installed.

After servicing, make the following leakage current checks to prevent the customer from being exposed to shock hazards.

1) Leakage Current Cold Check
2) Leakage Current Hot Check
3) Prevention of Electrostatic Discharge (ESD) to Electrostatically Sensitive

1-2. Important Notice

1-2-1. Follow the regulations and warnings

Most important thing is to list up the potential hazard or risk for the service personnel to open the units and disassemble the units. For example, we need to describe properly how to avoid the possibility to get electrical shock from the live power supply or charged electrical parts (even the power is off).

This symbol indicates that high voltage is present inside.It is dangerous to make any king of contact with any inside part of this product.

This symbol indicates that there are important operating and maintenance instructions in the literature accompanying the appliance.

1-2-2. Be careful to the electrical shock

To prevent damage which might result in electric shock or fire, do not expose this TV set to rain or excessive moisture. This TV must not be exposed to dripping or splashing water, and objects filled with water, such as vases, must be placed on top or above the TV.

1-2-3. Electrostatic discharge (ESD)

Some semiconductor (solid state) devices can be damaged easily by static electricity. Such components commonly are called Electrostatically Sensitive (ES) Devices. The following techniques should be used to help reduce the incidence of component damage caused by electrostatic discharge (ESD).

1-2-4. About lead free solder (PbF)

This product is manufactured using lead-free solder as a part of a movement within the consumer products industry at large to be environmentally responsible. Lead-free solder must be used in the servicing and repairing of this product.

1-2-5. Use the specified parts

Special parts which have purposes of fire retardant (resistors), high-quality sound (capacitors), low noise (resistors), etc. are used.

When replacing any of components, be sure to use only manufacture's specified parts shown in the parts list.

Downloaded from www.Manualslib.com manuals search engine

Safety Component

● Components identified by ⚠ mark have special characteristics important for safety.

1-2-6 Safety Check after Repair

Confirm that the screws, parts and wiring which were removed in order to service are put in the original positions, or whether there are the positions which are deteriorated around the serviced places serviced or not. Check the insulation between the antenna terminal or external metal and the AC cord plug blades. And be sure the safety of that.

General Servicing Precautions

1. Always unplug the receiver AC power cord from the AC power source before;
   a. Removing or reinstalling any component, circuit board module or any other receiver assembly.
   b. Disconnecting or reconnecting any receiver electrical plug or other electrical connection.
   c. Connecting a test substitute in parallel with an electrolytic capacitor in the receiver.

CAUTION: A wrong part substitution or incorrect polarity installation of electrolytic capacitors may result in an explosion hazard.

2. Test high voltage only by measuring it with an appropriate high voltage meter or other voltage measuring device (DVM, FETVOM, etc) equipped with a suitable high voltage probe.
3. Do not test high voltage by "drawing an arc".
4. Do not spray chemicals on or near this receiver or any of its assemblies.
5. Unless specified otherwise in this service manual, clean electrical contacts only by applying the following mixture to the contacts with a pipe cleaner, cotton-tipped stick or comparable non-abrasive applicator; 10% (by volume) Acetone and 90% (by volume) isopropyl alcohol (90%-99% strength).

CAUTION: This is a flammable mixture. Unless other specified in this service manual, lubrication of contacts is not required. Capacitors may result in an explosion hazard.

6. Do not defeat any plug/socket B+ voltage interlocks with which receivers covered by this service manual might be equipped.
7. Do not apply AC power to this instrument and/or any of its electrical assemblies unless all solid-state device heat sinks are correctly installed.
8. Always connect the test receiver ground lead to the receiver chassis ground before connecting the test receiver positive lead. Always remove the test receiver ground lead last. Capacitors may result in an explosion hazard.
9. Use with this receiver only the test fixtures specified in this service manual.
10. Remove the antenna terminal on TV and turn on the TV.
11. Insulation resistance between the cord plug terminals and the external exposure metal should be more than Mohm by using the 500V insulation resistance meter.
12. If the insulation resistance is less than M ohm, the inspection repair should be required. If you have not the 500V insulation resistance meter, use a Tester. External exposure metal: Antenna terminal Headphone jack.

Downloaded from www.Manualslib.com manuals search engine

Electrostatically Sensitive (ES) Devices

Some semiconductor (solid-state) devices can be damaged easily by static electricity. Such components commonly are called Electrostatically Sensitive (ES) Devices. Examples of typical ES devices are integrated circuits and some field-effect transistors and semiconductor "chip" components. The following techniques should be used to help reduce the incidence of component damage caused by static by static electricity.

1. Before handling any semiconductor component or semiconductor equipped assembly, immediately drain off any electrostatic charge on your body by touching a known earth ground. Alternatively, obtain and wear a commercially available discharging wrist strap device, which should be removed to prevent potential shock reasons prior to applying power to the unit under test.
2. After removing an electrical assembly equipped with ES devices, place the assembly on a conductive surface such as aluminum foil, to prevent electrostatic charge buildup or exposure of the assembly.
3. Use only a grounded-tip soldering iron to solder or unsolder ES devices.
4. Use only an anti-static type solder removal device. Some solder removal devices not classified as “anti-static” can generate electrical charges sufficient to damage ES devices.
5. Do not use freon-propelled chemicals. These can generate electrical charges sufficient to damage ES devices.
6. Do not remove a replacement ES device from its protective package until immediately before you are ready to install it.

   (Most replacement ES devices are packaged with leads electrically shorted together by conductive foam, aluminum foil or comparable conductive material).
7. Immediately before removing the protective material from the leads of a replacement ES device, touch the protective material to the chassis or circuit assembly into which the device will be installed.

CAUTION: Be sure no power is applied to the chassis or circuit, and observe all other safety precautions.

8. Minimize bodily motions when handling unpackaged replacement ES devices.

(Otherwise harmless motion such as the brushing together of your clothes fabric or the lifting of your foot from a carpeted floor can generate static electricity sufficient to damage an ES device.)

1-2-7. Ordering Spare Parts

Please include the following informations when you order parts. (Particularly the Version letter)

1. Model number, Serial number and Software Version

   The model number and Serial number can be found on the back of each product and the Software Version can be found at the Spare Parts List.
2. Spare Part No. and Description

   You can find them in the Spare Parts List.

Downloaded from www.Manualslib.com manuals search engine

1-2-8. Photo used in this manual

The illustration and photos used in this Manual may not base on the final design of products, which may differ from your products in some way.

1-3. How to Read this Service Manual

Icons:

Icons are used to attract the attention of the reader to specific information. The meaning of each icon is described in the table below:

Note:

A “note” provides information that is not indispensable, but may nevertheless be valuable to the reader, such as tips and tricks.

Caution:

A “caution” is used when there is danger that the reader, through incorrect manipulation, may damage equipment, data loss, get an unexpected result or has to restart (part of) a procedure.

Warning:

A “warning” is used when there is danger of personal injury.

Reference:

A “reference” guides the reader to other places in this binder or in this manual, where he/she will find additional information on a specific topic.

Downloaded from www.Manualslib.com manuals search engine

2. Specifications

Model	**32E2000**
Screen Size	31.5 inch
Aspect Ratio	16:9
Resolution	1366 x 768
Response Time (ms)	8
Angle of View	H:178° V: 178°
Color Display	16.7 M
OSD Language	English/French/Spanish
Video/Audio System	ATSC/NTSC/M/MTS
Dimensions with Stand (W x H x D)	22.82X18.39X7.12 Ib
Dimensions w/o Stand (W x H x D)	22.82X16.83X2.72 Ib
Weight with Stand	9.79 Ib
Weight without Stand	9.71 Ib
Wall Mount Pattern (H x V)	200 x 100 mm
Wall Mount Screw Type	M6 x 8mm
Power Consumption	50 W
Standby	<1W
Mains Power	120V~60HZ
Audio Power	8W + 8W

Downloaded from www.Manualslib.com manuals search engine

3. Location of Controls and Components

3-1 Component Location

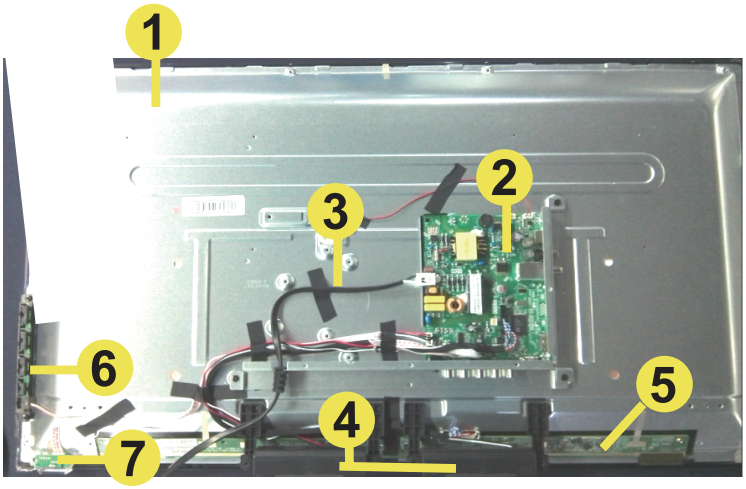

No.	Component
1	LED Panel
2	System Main Board
3	Power cord
4	Left and Right Speakers
5	Panel T-Con Board
6	Keypad Board
7	IR LED Board

3-2 Main Board

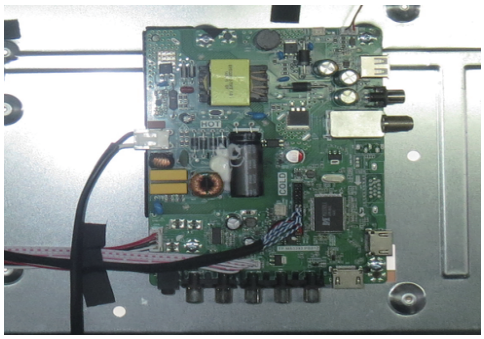

Downloaded from www.Manualslib.com manuals search engine

3-2-1 Function Description

Process signal which incept from exterior equipment then translate into signal that panel can display.

3-2-2 Connector Definition

♦ CNB1 (2PIN-7.92): AC INPUT CONNECTOR

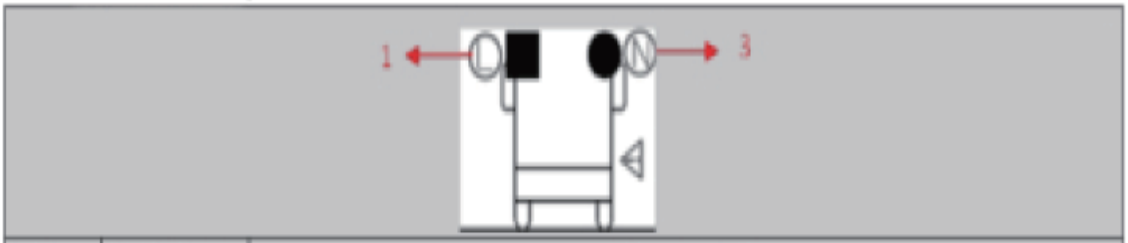

NO.	SYMBOL	DESCRIPTION
1	L	LIVE
2	NC	No Connection
3	N	NEUTRAL

♦ CN18(4PIN/2.54): SPEAKER CONNECTOR

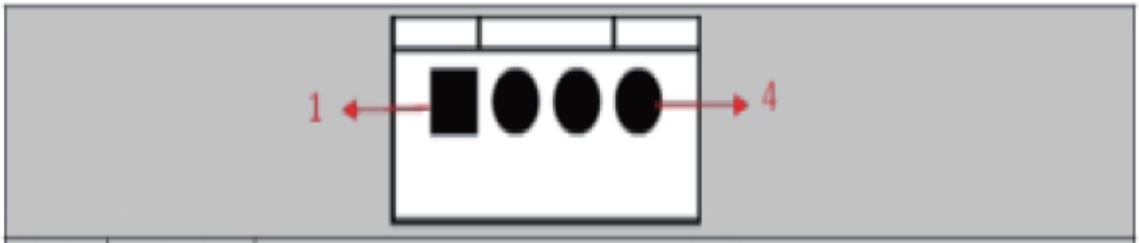

NO.	SYMBOL	DESCRIPTION
1	ROUT+	Audio Right Channel Output+
2	ROUT-	Audio Right Channel Output-
3	LOUT-	Audio Left Channel Output-
4	LOUT+	Audio Left Channel Output+

Downloaded from www.Manualslib.com manuals search engine

◆ CN6(14PIN/2.0): IR& KEY BOARD CONNECTOR

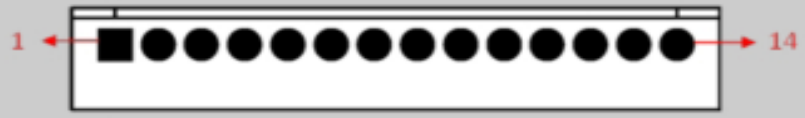

NO.	SYMBOL	DESCRIPTION
1	GND	Ground
2	K7	Key7(Reserved)
3	K6	Key6
4	K5	Key5
5	K4	Key4
6	K3	Key3
7	K2	Key2
8	K1	Key1
9	K0	Key0
10	GND	Ground
11	IR	IR Receiver
12	GRN	Green Indicator
13	RED	Red Indicator
14	5V	+5V DC Power Supply

◆ CNB2(2PIN/2.0): 12V POWER SUPPLY FOR UPGRADE

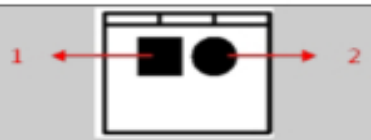

NO.	SYMBOL	DESCRIPTION
1	GND	Ground
2	12V	+12V Power Supply

◆ CN5(2×15PIN/2.0): LVDS INTERFACE CONNECTOR

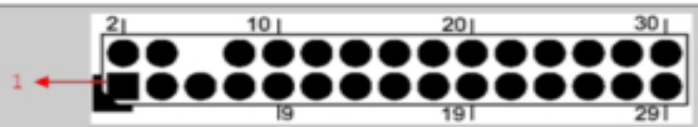

NO.	SYMBOL	DESCRIPTION
1	VSEL	Power Supply for Panel
2	VSEL	
3	VSEL	

Downloaded from www.Manualslib.com manuals search engine

4	GND	Ground
5	GND	
6	NC	NC
7	TXOD-	LVDS ODD D- Signal
8	TXOD+	LVDS ODD D+ Signal
9	TXO1-	LVDS ODD 1- Signal
10	TXO1+	LVDS ODD 1+ Signal
11	TXO2-	LVDS ODD 2- Signal
12	TXO2+	LVDS ODD 2+ Signal
13	GND	Ground
14	GND	
15	TXOC-	LVDS ODD Clock- Signal
16	TXOC+	LVDS ODD Clock+ Signal
17	TXO3-	LVDS ODD 3- Signal
18	TXO3+	LVDS ODD 3+ Signal
19	TXED-	LVDS EVEN D- Signal
20	TXED+	LVDS EVEN D+ Signal
21	TXE1-	LVDS EVEN 1- Signal
22	TXE1+	LVDS EVEN 1+ Signal
23	TXE2-	LVDS EVEN 2- Signal
24	TXE2+	LVDS EVEN 2+ Signal
25	GND	Ground
26	GND	
27	TXEC-	LVDS EVEN Clock- Signal
28	TXEC+	LVDS EVEN Clock+ Signal
29	TXE3-	LVDS EVEN 3- Signal
30	TXE3+	LVDS EVEN 3+ Signal

◆ *CN7(3PIN/2.0): AUDIO LINEOUT CONNECTOR

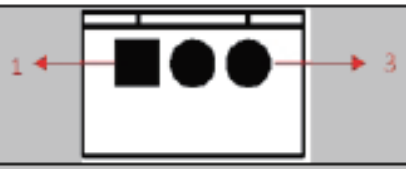

NO.	SYMBOL	DESCRIPTION
1	LINE_RO	Audio Lineout Right Channel Output
2	GND	Ground
3	LINE_LO	Audio Lineout Left Channel Output

Downloaded from www.Manualslib.com manuals search engine

4. Disassembly Procedures

1. Remove the screws securing the back cover. Torque: 3.8 ± 0.53 kgf-cm.

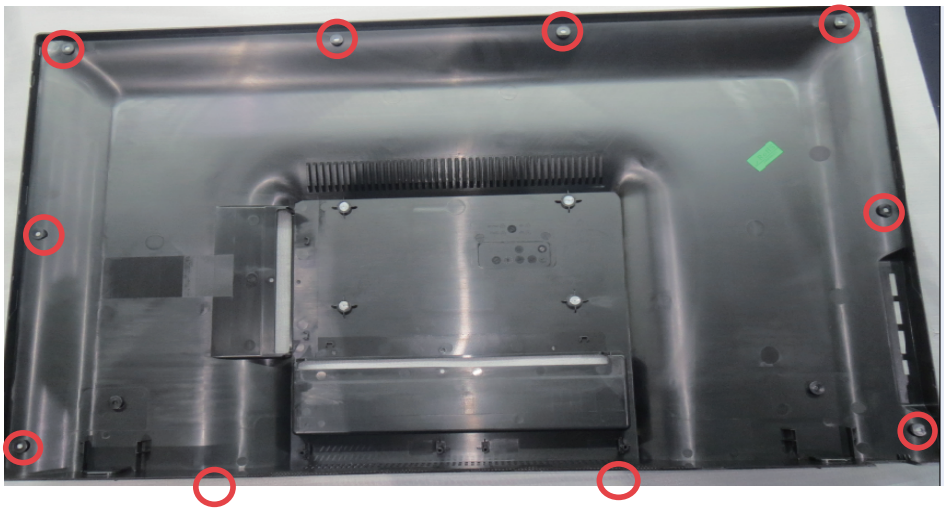

Downloaded from www.Manualslib.com manuals search engine

2. Detach the back cover from left to right and remove it from the unit.

3. Remove all tapes on the cables.

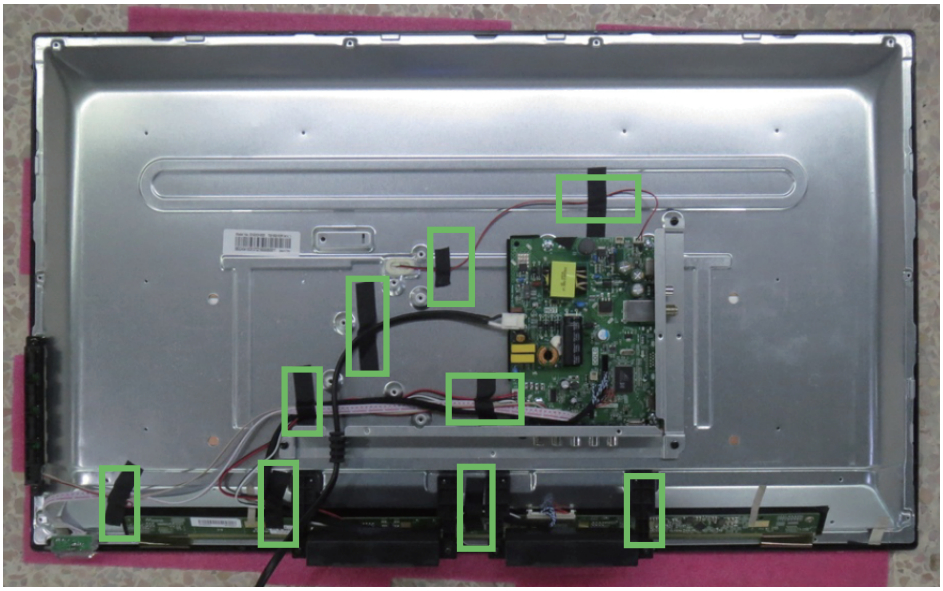

Downloaded from www.Manualslib.com manuals search engine

4. Disconnect the cables and remove them from the unit.

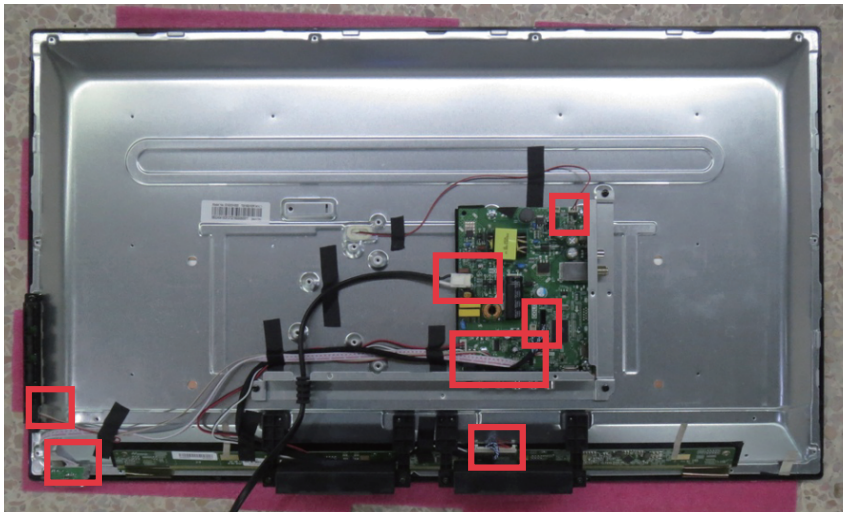

5. Remove the screws securing the main board, Speaker、side I/O cover and bottom I/O cover, then remove them from the unit. Torque: 3.8±0.3 kgf-cm.

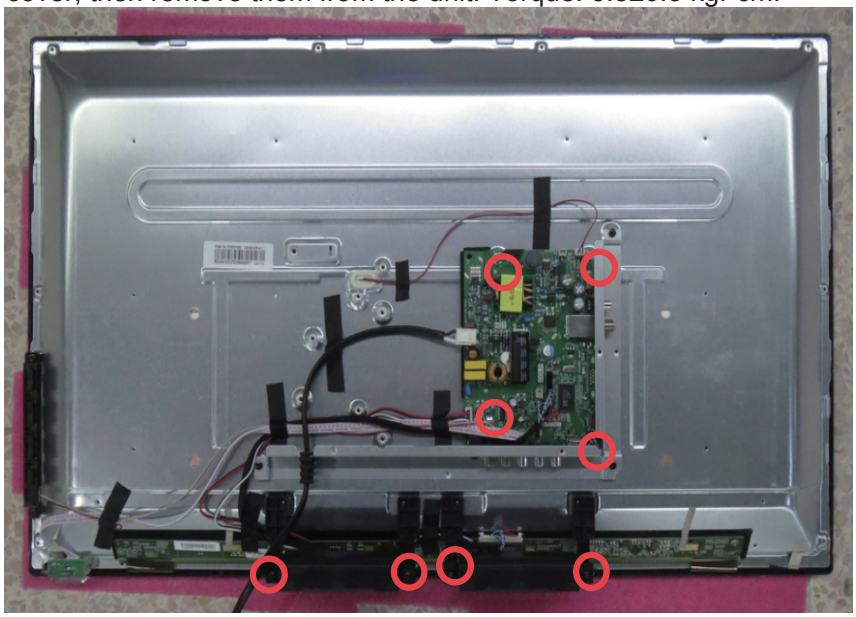

Downloaded from www.Manualslib.com manuals search engine

6. Delete the speaker stents and press keypad remote control board screw Torque: 3.8±0.3 kgf-cm.

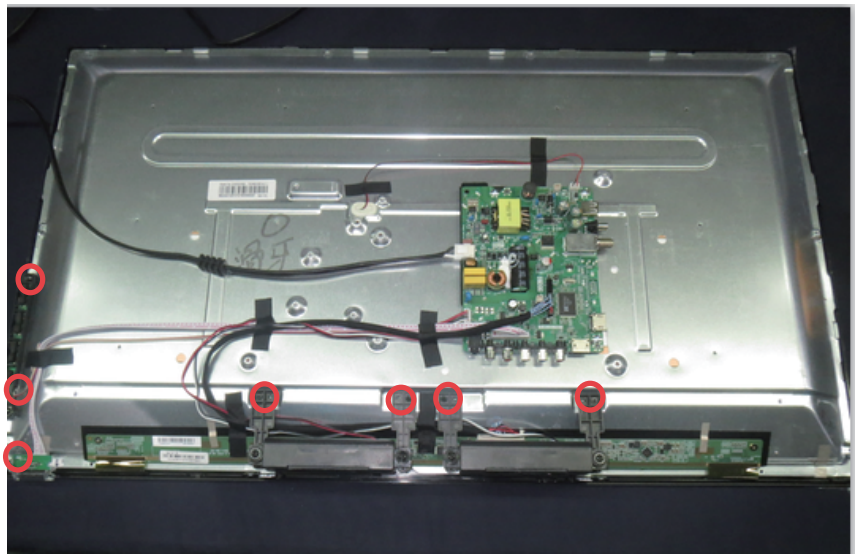

7. Disconnect your screen line and conductive cloth.

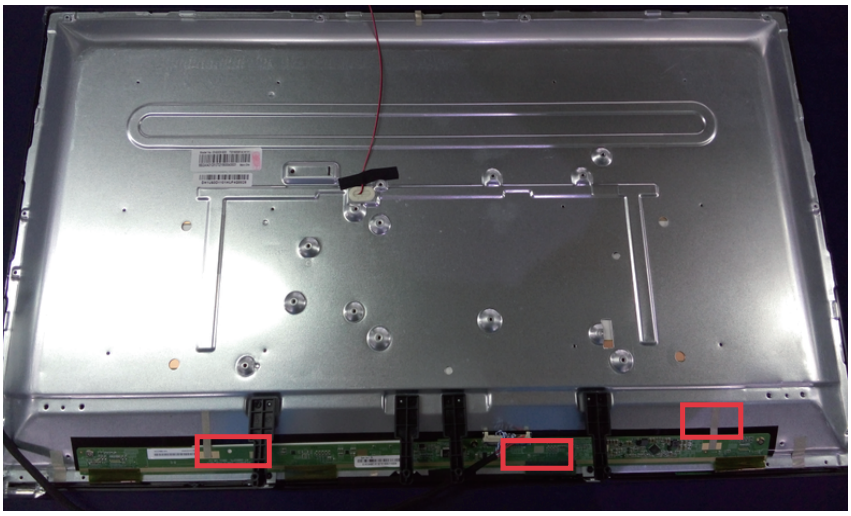

Downloaded from www.Manualslib.com manuals search engine

8. Remove the screw and conductive cloth.

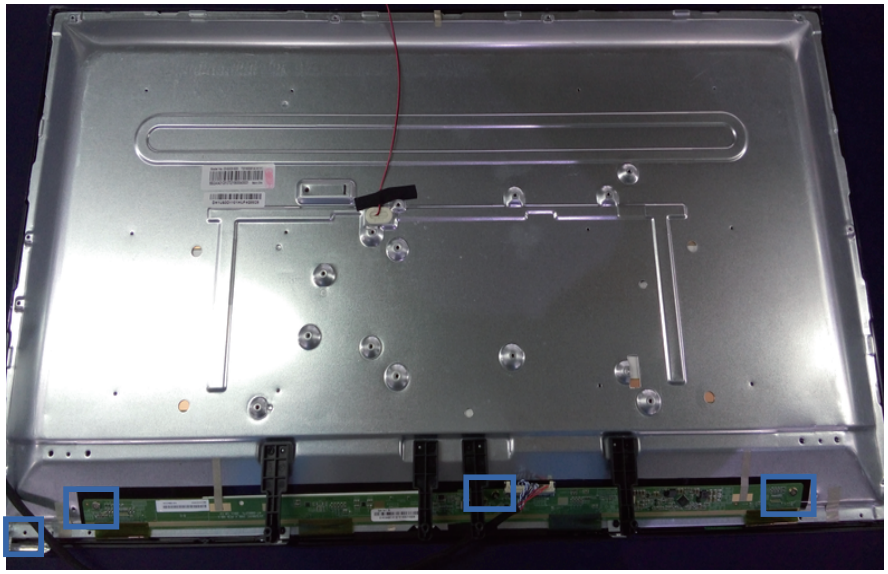

9 . Remove the panel from the front bezel.

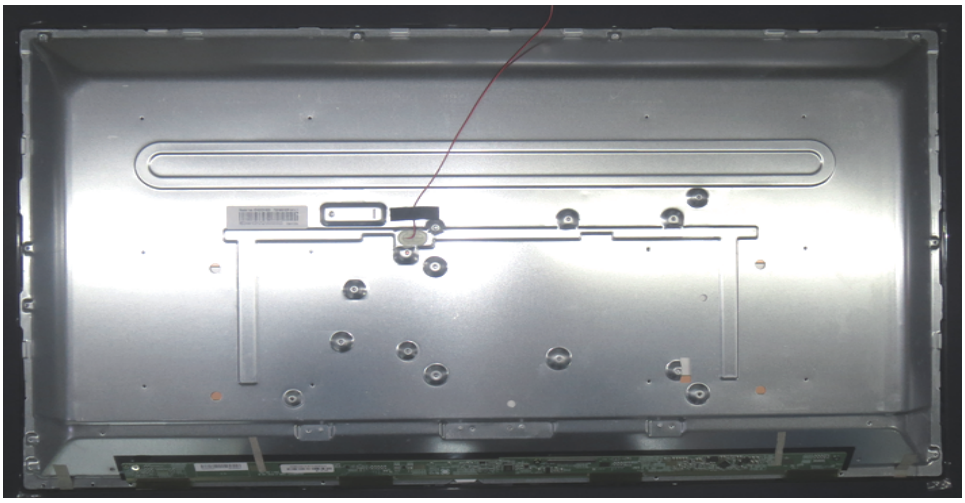

Downloaded from www.Manualslib.com manuals search engine

5. Accessories

Remote Control/2 x AAA Batteries

User Manual

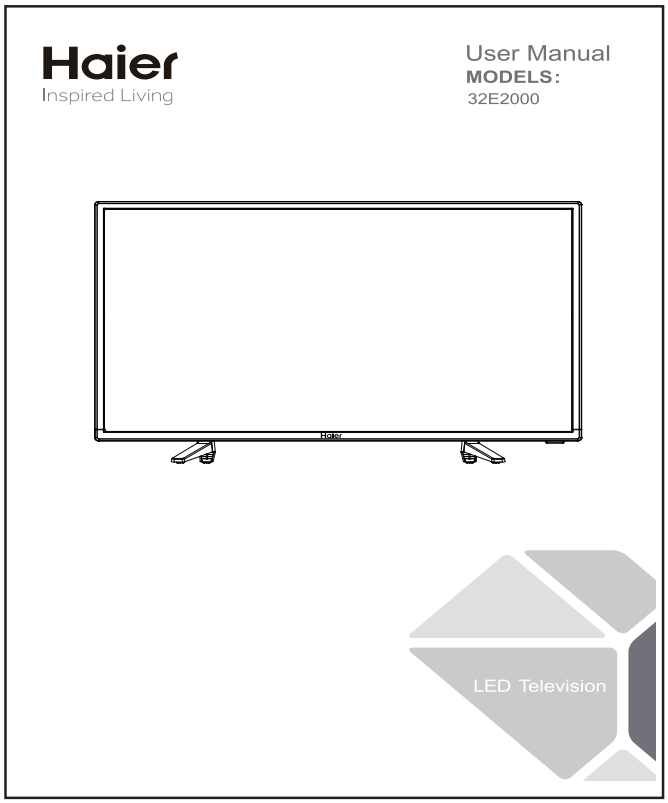

Warranty Card (optional)

Haier

Customer warranty card

Customer Name _____ Customer Mobile / Phone _____
Customer Address _____ Product _____
Purchase Date _____ Model _____
Dealer _____ Serial No. _____

□Refrigerator □Freezer □Washing machine □LCD TV □Air conditioner □Other

Haier Electrical Appliances Philippines Inc 6th Floor Reliance IT Center, #99 E. Rodriguez Jr. Ave. Bo. Ugong, Pasig City, Philippines 1604.
Call center (02)8921493 Fax:(02)8921260/8922217 Website: www.haier.com
Note: Please encircle clearly the address of the nearest service center at your area.

SAN FERNANDO BRANCH Cer-Hil Subd.Mac Arthur Hway San Fernando City, Pampanga Telefax No.:(045)8604252	**NAGA BRANCH** Door No.8 Bldg.1,Puritan Land Devt.Corp. Roxas Ave. Naga City Tel.No.:(054)4723650 Fax.No.:(054)811116 01	**CEBU BRANCH** 203-A MC Briones St. Subangdaku, Mandaue City Telefax No.:(032)2589637
ILOILO BRANCH D'Appliance Arcade, South Fundidor, Molo,Iloilo City Tel.No.:(033)3368698 Fax.No.:(033)3371313	**DAVAO BRANCH** San Joshua Realty Bldg.,Km 7 Insang,Davao City Telefax No.:(082)3006586	**CAGAYAN DE ORO BRANCH** Door 1 True Value Bldg. Lapasan St.,Cagayan De Oro City Tel.No.:(088)2314628 Fax.No.:(088)2272448 2

Present this Warranty Card together with your Sales Invoice/Official Receipt upon request for service.

Downloaded from www.Manualslib.com manuals search engine

6. Installation Instructions

PREPARATION

IMPORTANT: Do not apply pressure to the screen display area which may compromise the integrity of the display. The manufacturer's warranty does not cover user abuse or improper installations.

ATTACHING THE STAND

IMPORTANT: The stand of the TV must be assembled prior to usage.

1. Place TV unit face down on a soft and flat surface (blanket, foam, cloth, etc.) to prevent any damage to the TV.
2. Fix the stand to the bottom of the TV with the four B4 x 14F mm screws.

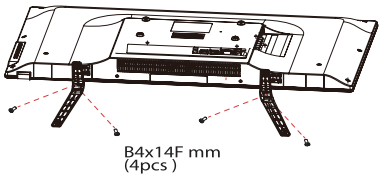

PREPARING YOUR LCD TV FOR WALL MOUNTING

We suggest that you keep your TV at least 2.36 inches (60 mm) from the wall to prevent cable interference. Before mounting your TV on the wall, you need to remove the stand.

For your safety, please use only with a UL listed wall mount bracket with minimum weight of the TV without stand. (Please see page 18 for the weight of the TV.)

To attach a wall mount bracket to your TV:

1. Remove the screws holding your TV to the stand.
2. Remove the stand from your TV.
3. Secure the wall mount bracket to the back of your TV using four screws (see page 18 for the size of the screws). Follow the instructions of the user manual that came with the wall mount bracket to install.

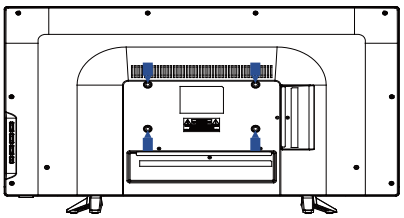

NOTE
The wall mount bracket and the screws are not included.

TURNING ON THE TV

1. Install the stand and place the TV on a solid surface.

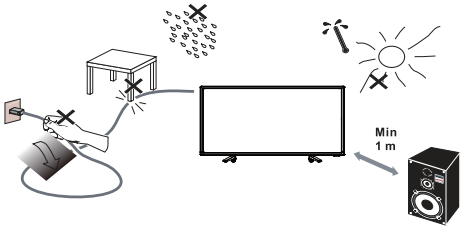

NOTE

- Ensure that the TV is placed in a position to allow free flow of air. Do not cover the ventilation openings on the back cover.
- To prevent any unsafe situations, no naked flame sources, such as lighted candles, should be placed on or in the vicinity.
- Avoid heat, direct sunlight and exposure to rain or water. The equipment shall not be exposed to dripping or splashing.

2. Connect the antenna cable or cable TV cable to the **ANT IN** aerial socket on the back of the TV set. See "CONNECTING TO AN ANTENNA/CABLE WALL JACK" on page 9.
3. Remote control:
   Remove the cover of the battery compartment. Insert the 2 supplied batteries (Type AAA 1.5V).

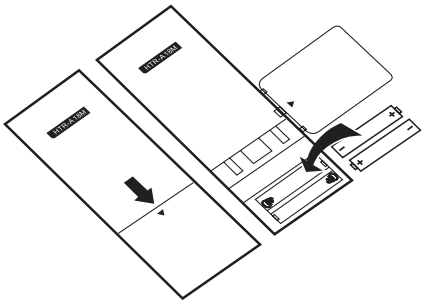

4. Power:
   Plug the cord into a working power outlet.

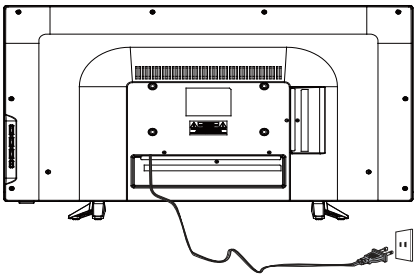

5. Turn the TV on:
   Press ⏻ on the remote control or **POWER** button on the side control panel of the TV.

Downloaded from www.Manualslib.com manuals search engine

PERIPHERAL CONNECTION AND CONTROLS

PERIPHERAL CONNECTION

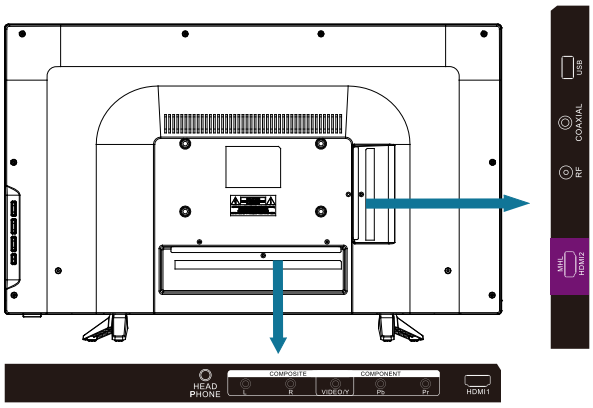

SIDE CONTROL

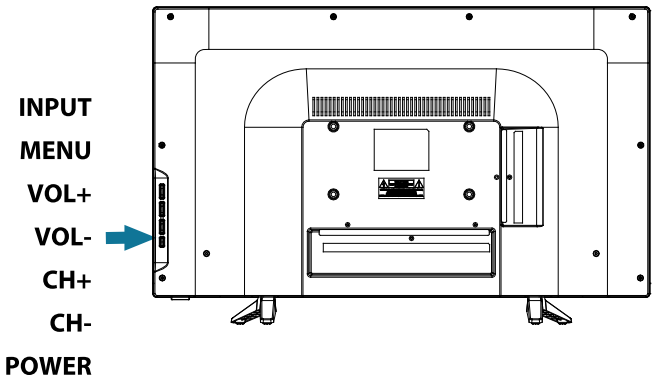

#	Item	Description
1	**HEADPHONE**	Connect headphones to this jack. When headphones are inserted, the TV speakers will be muted.
2	**L** **R**	Connect the audio cables for a co mponent or composite device.
3	**VIDEO**	Connect the video cable for a co mposite device.
4	**YPbPr**	Connect the video cables for a co mponent device.
5	**HDMI1**	Connect HDMI devices to these jacks. An HDMI cable carries both video and sound. You do not need to make an audio connection for an HDMI device. Note: The HDMI2 port is MHL enabled.
5	**HDMI2(MHL)**	
6	**RF**	Connect an antenna or cable TV cable to this jack.
7	**COAXIAL**	Connect a coaxial audio cable from a sound bar, stereo system, receiver, etc.
8	**USB**	Insert a USB storage device to the USB port to view JPEG photos, and listen to MP3 music. (See page 16 for more information.)

#	Item	Description
1	**INPUT**	Press to select the input source. Press the VOL+ button to change to the selected input source.
2	**MENU**	Press to open or close the on-screen menu.
3	**VOL+**	Press to increase the volume level.
4	**VOL-**	Press to decrease the volume level.
5	**CH+**	Press to go to the next channel in the channel list.
6	**CH-**	Press to go to the previous channel in the channel list.
7	**POWER**	Press to turn the TV on or off (standby mode). When the TV is off, power still flows through it. To completely disconnect power, unplug the power cord.

Downloaded from www.Manualslib.com manuals search engine

MAKING CONNECTIONS

CONNECTING TO AN ANTENNA/CABLE WALL JACK

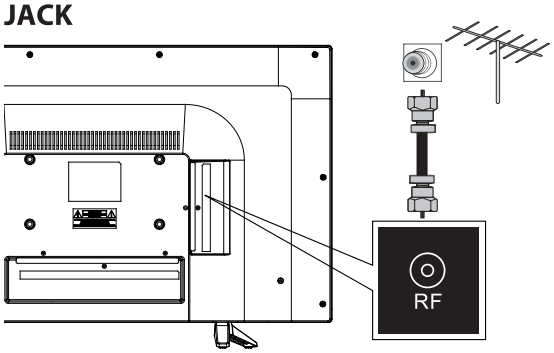

Using composite cable (good)

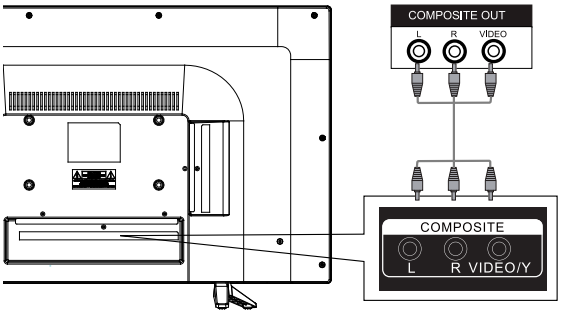

NOTE

- Cables are often color-coded to match color-coded jacks.

CONNECTING EXTERNAL AUDIO/VIDEO DEVICE

Using HDMI cable (best)

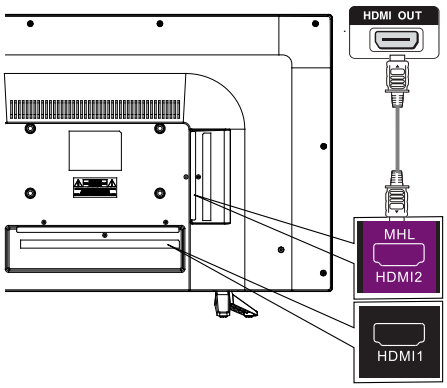

NOTE

- An HDMI cable carries both video and audio. You do not need to use any audio cables.
- You can connect MHL devices, such as the Roku Streaming Stick and compatible mobile phones and tablets to the HDMI2(MHL) port. A USB to HDMI cable is required to connect a mobile phone or tablet to the TV. Please check the documentation of your device.

Using component cables (better)

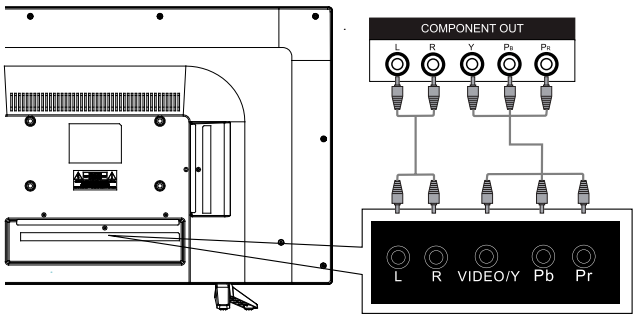

CONNECTING HEADPHONES

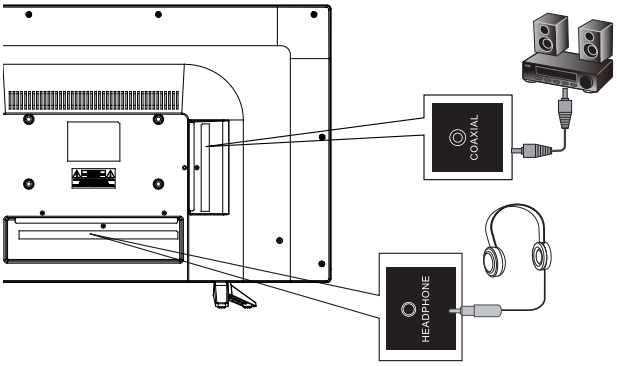

NOTE

Turn off the TV and external devices before making connections.

To play from the external device:

1. Turn on the TV and the connected device.
2. Press **INPUT** to open the input source list, then press ▲/▼ to highlight the input to which the device was connected and press **OK** to switch.
   - Select **TV** to watch TV from the **RF** input.
   - Select **HDMI1, HDMI2(MHL)**to play from a device connected to the **HDMI1, HDMI2(MHL)**input.
   - Select **Composite** to play from the device connected to the **COMPOSITE** input.
   - Select **Component** to play from the device connected to the **COMPONENT** input.

English

Downloaded from www.Manualslib.com manuals search engine

Connecting AV Equipment

Using HDMI Cable (best)

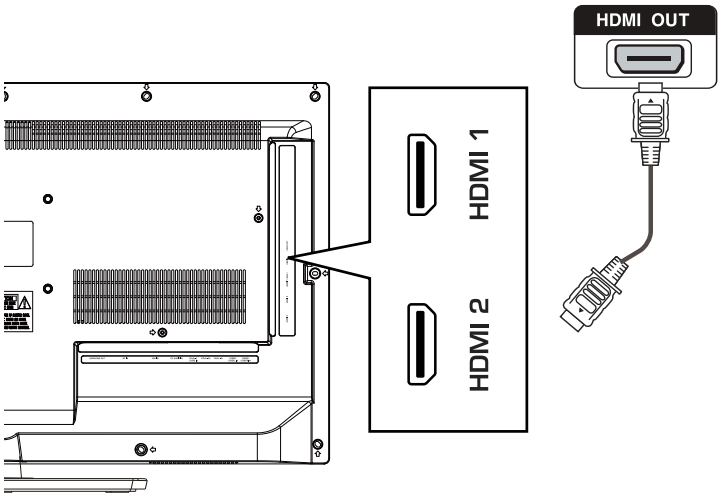

Note

- An HDMI cable carries both video and audio. You do not need to use any audio cables.

Using Component Cable (better)

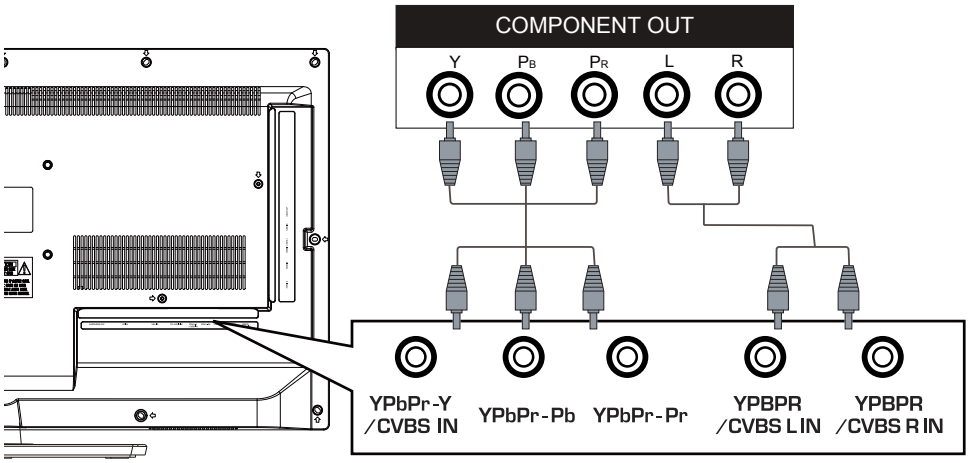

Downloaded from www.Manualslib.com manuals search engine

Using Composite Cable (good)

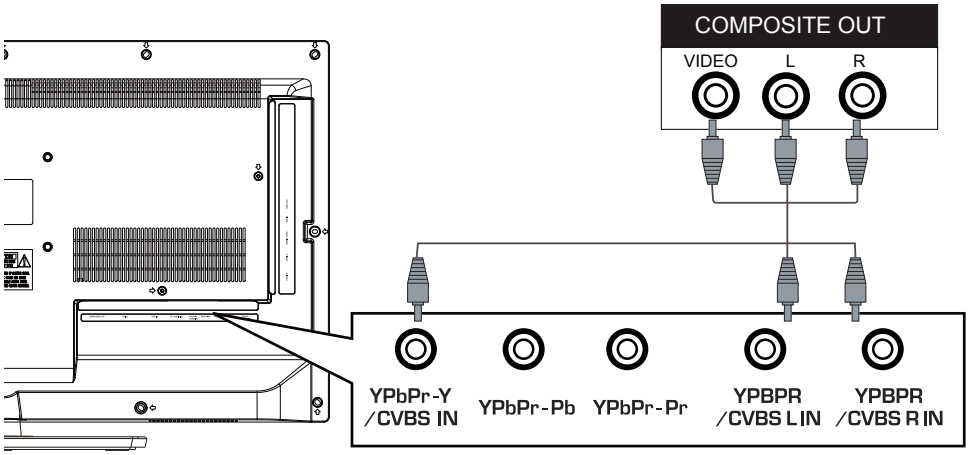

Note

- The component and composite audio and Y jack are shared. You can only connect one component or composite device at a time.
- When connecting a composite video source, connect the yellow video wire to the Y (green) jack.

Connecting A Digital Audio Device

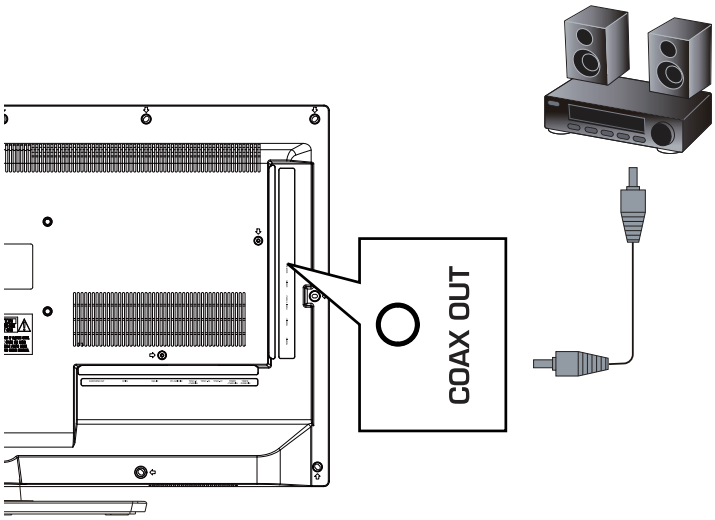

Downloaded from www.Manualslib.com manuals search engine

Connecting Headphones

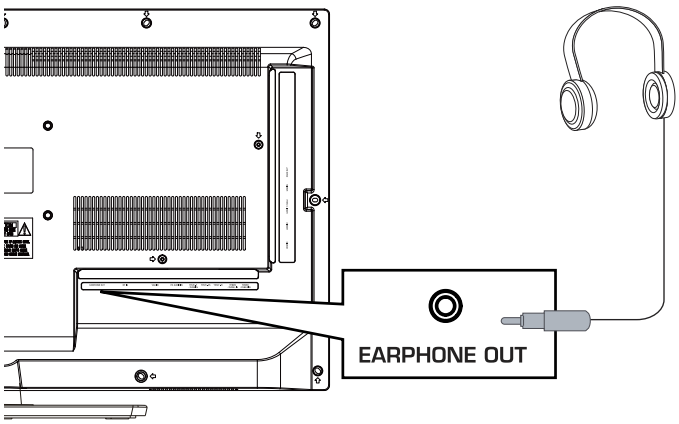

Note

- When headphones are inserted, the TV speakers will be muted.

Downloaded from www.Manualslib.com manuals search engine

Cable Sample

Connection Type and Jack	Cable Connector
HDMI video/audio	
Component video (requires an audio connection)	
Composite video (requires an audio connection)	
Analog audio input	
Coaxial digital audio	

Note
- The cables are not included in the package.

Downloaded from www.Manualslib.com manuals search engine

7. Operation Instructions

7-1 Side Control

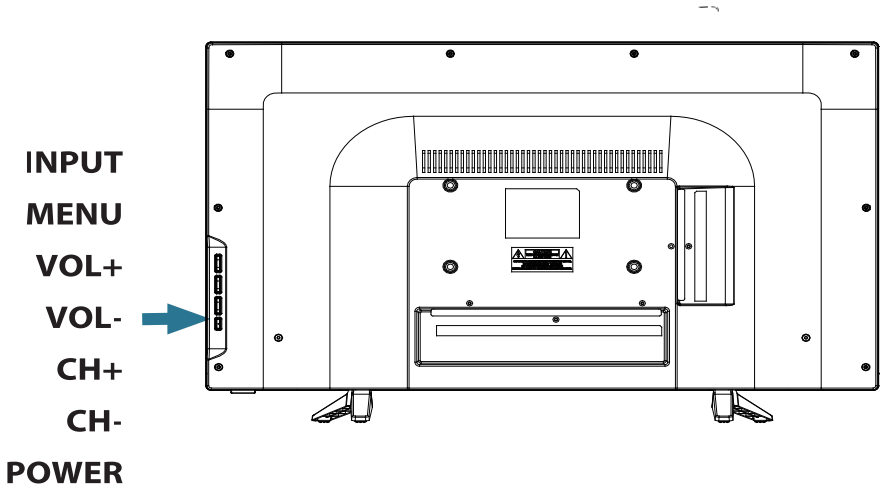

#	Item	Description
1	**INPUT**	Press to select the input source. Press the VOL+ button to change to the selected input source.
2	**MENU**	Press to open or close the on-screen menu.
3	**VOL+**	Press to increase the volume level.
4	**VOL-**	Press to decrease the volume level.
5	**CH+**	Press to go to the next channel in the channel list.
6	**CH-**	Press to go to the previous channel in the channel list.
7	**POWER**	Press to turn the TV on or off (standby mode). When the TV is off, power still flows through it. To completely disconnect power, unplug the power cord.

Downloaded from www.Manualslib.com manuals search engine

7-2 Rear Terminals

PERIPHERAL CONNECTION

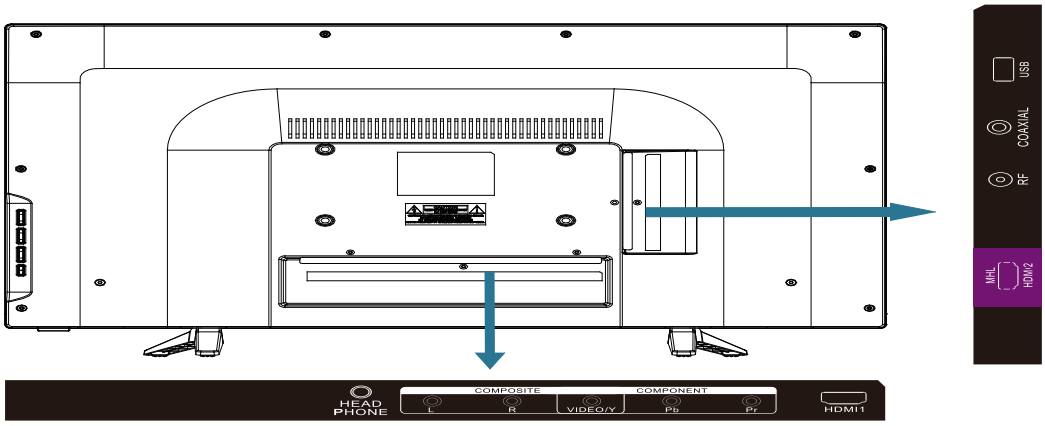

#	Item	Description
1	**HEADPHONE**	Connect headphones to this jack. When headphones are inserted, the TV speakers will be muted.
2	**L** **R**	Connect the audio cables for a co mponent or composite device.
3	**VIDEO**	Connect the video cable for a composite device.
4	**YPbPr**	Connect the video cables for a co mponent device.
5	**HDMI1**	Connect HDMI devices to these jacks. An HDMI cable carries both video and sound. You do not need to make an audio connection for an HDMI device. Note: The HDMI2 port is MHL enabled.
5	**HDMI2(MHL)**	
6	**RF**	Connect an antenna or cable TV cable to this jack.
7	**COAXIAL**	Connect a coaxial audio cable from a sound bar, stereo system, receiver, etc.
8	**USB**	Insert a USB storage device to the USB port to view JPEG photos, and listen to MP3 music. (See page 16 for more information.)

Downloaded from www.Manualslib.com manuals search engine

7-3 Using Remote Control

Item	Descriptions
Power	Press to turn the TV on or off. When your TV is off, power still flows through it. To completely disconnect power, unplug the power cord.
INPUT	Press to open the input source list.
USB	Press to switch to USB input (USB multimedia mode).
CC	Press this key to select the CC ,ON or OFF mode and CC on Mute.
HOME	Switch to the HDMI2(MHL) input, If the Roku Streaming Stick is connected, press this button to return to the Roku home screen.
0~9 /• number	Press to enter a TV channel number (Press "**.**" to choose the sub-channel).
RECALL	Press to switch to last viewed channel.
VOL+/VOL-	Press **VOL+** or **VOL-** to adjust volume level.
MUTE	Press to switch the sound on or off.
MENU	Press to open or close the on-screen menu.
CH+/CH -	Press **CH+** or **CH-** to change TV channels.
BACK	Return to the previous menu. If the Roku Streaming Stick is connected, press this button to go back to the previous screen.
DISPLAY	Press to display the information window.
EXIT	Press to exit the menu or on screen display (OSD).
SAP	Press to switch sounds: SAP, Stereo, Mono for ATV, or switch audio language for DTV.
SLEEP	Press to set the sleep timer.
WIDE	Press to adjust the picture aspect ratio.
AUDIO	Press to switch the audio mode.
PICTURE	Press to switch the picture mode.
OK	Enter the selected option or perform the selected operation.
CH.LIST	Press to display the Channel List.
FAVORITE	Press to display the Favorite List.
▲/▼/◄/►	Use the arrow buttons to move around in menus.
PLAY	Press to start playing the MEDIA, or to pause playing.(Used for models with MEDIA function only).
REV	Press to fast reverse MP3 playback in Music mode.
FWD	Press to fast forward MP3 playback in Music mode.
*****	Enter electronic program guide. If the Roku Streaming Stick is connected, press this button to view more options.

Downloaded from www.Manualslib.com manuals search engine

8. Electrical Parts

8-1 System Block Diagram

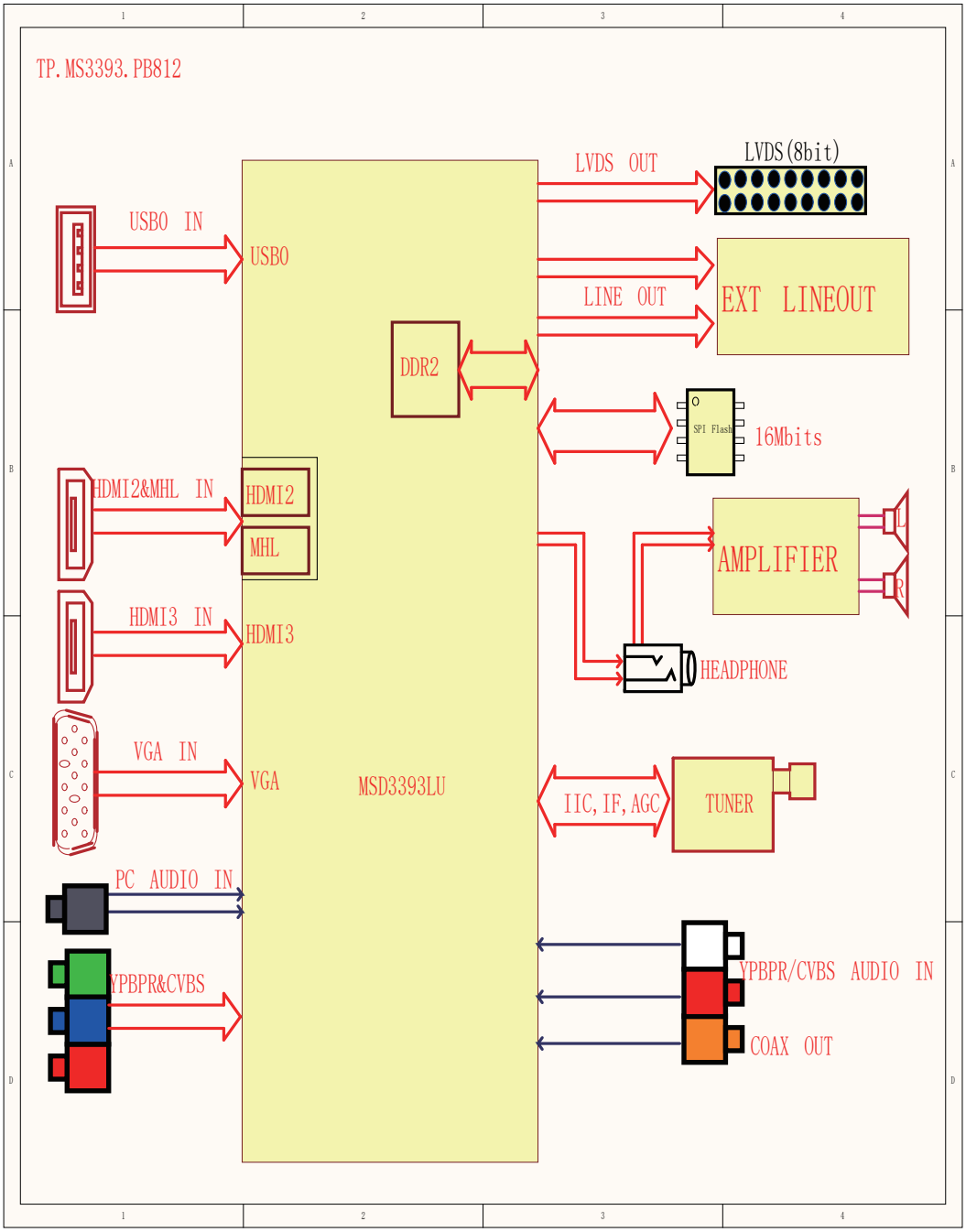

Downloaded from www.Manualslib.com manuals search engine

8-2 Circuit Diagram

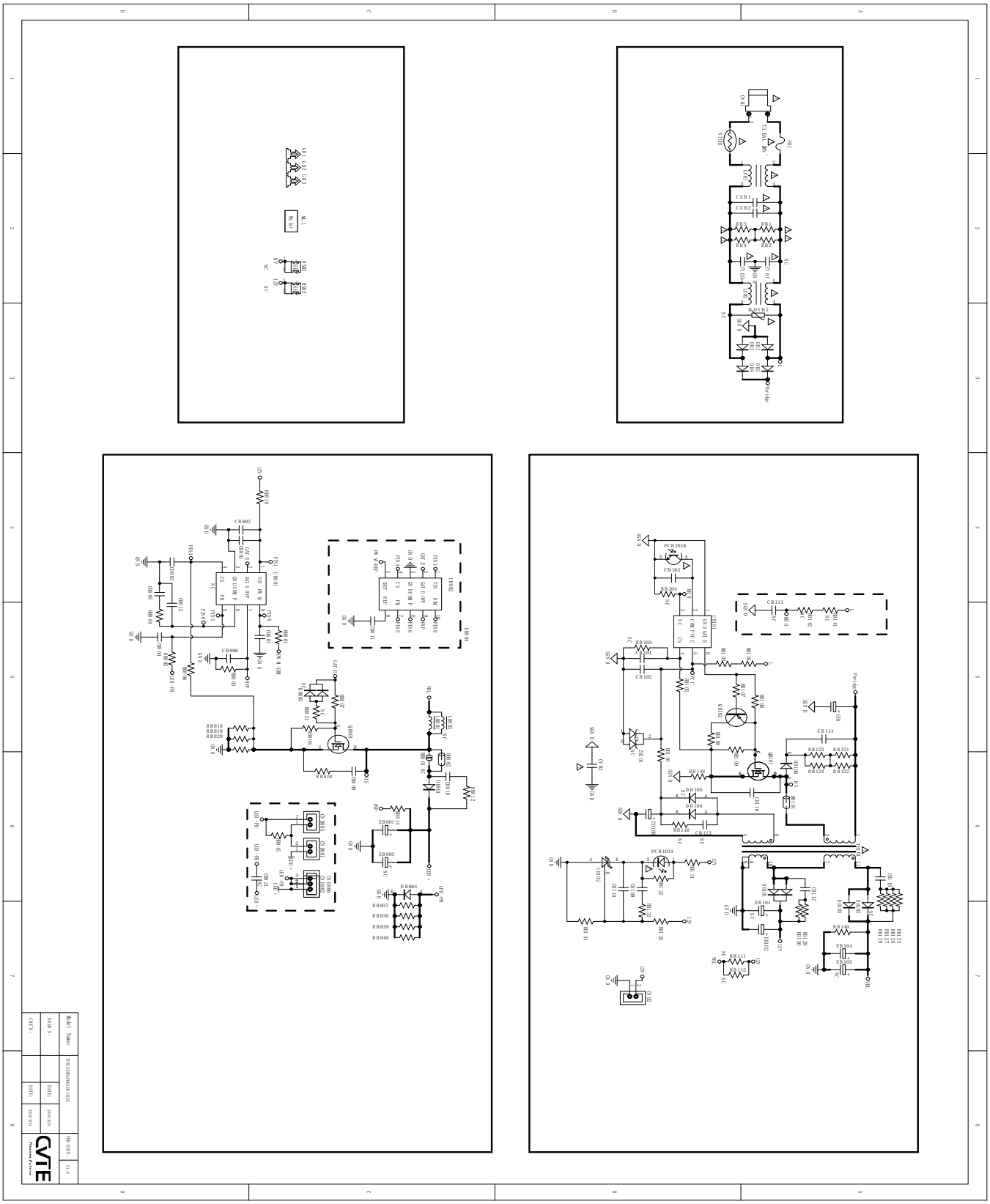

Downloaded from www.Manualslib.com manuals search engine

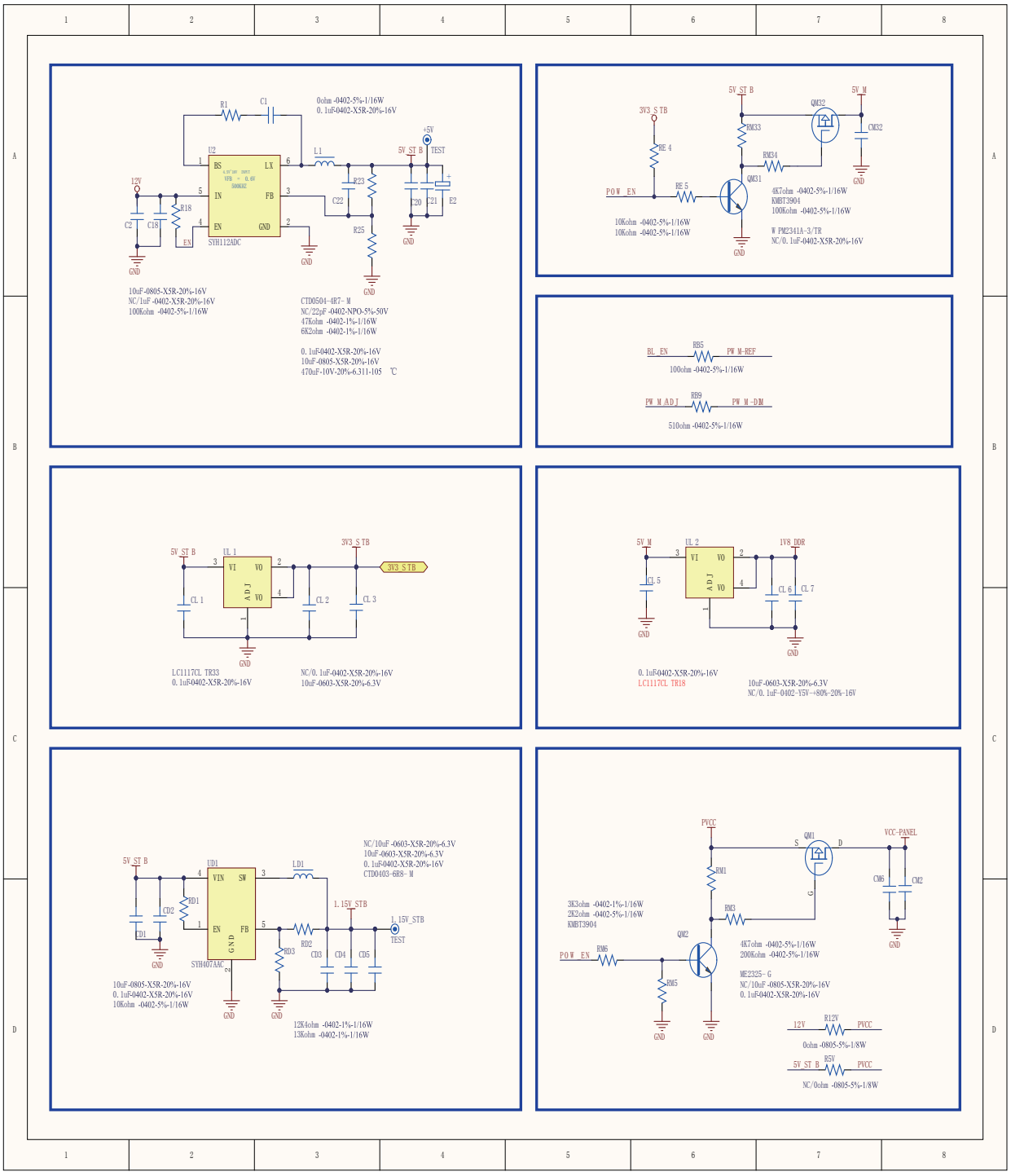

Downloaded from www.Manualslib.com manuals search engine

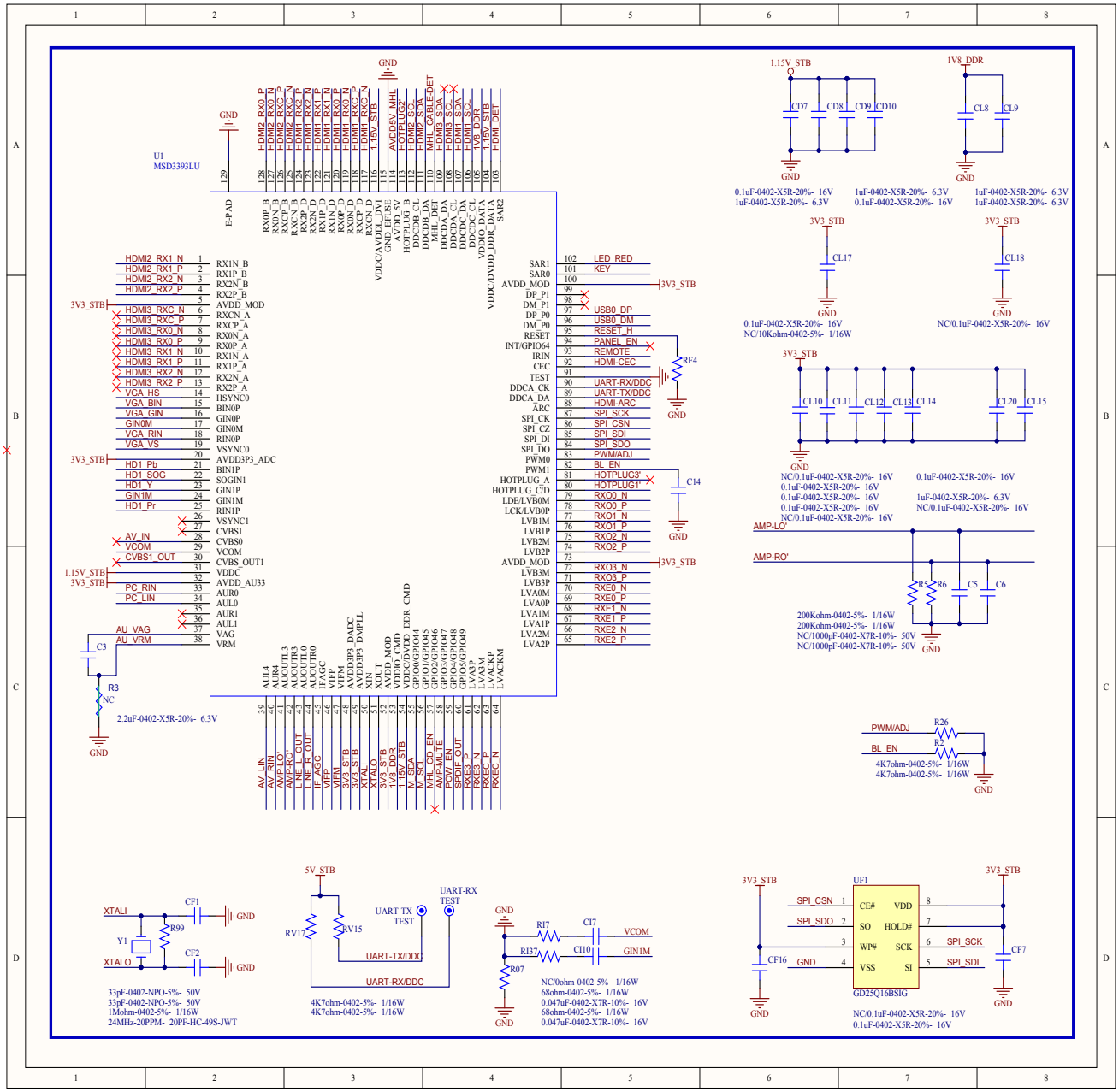

Downloaded from www.Manualslib.com manuals search engine

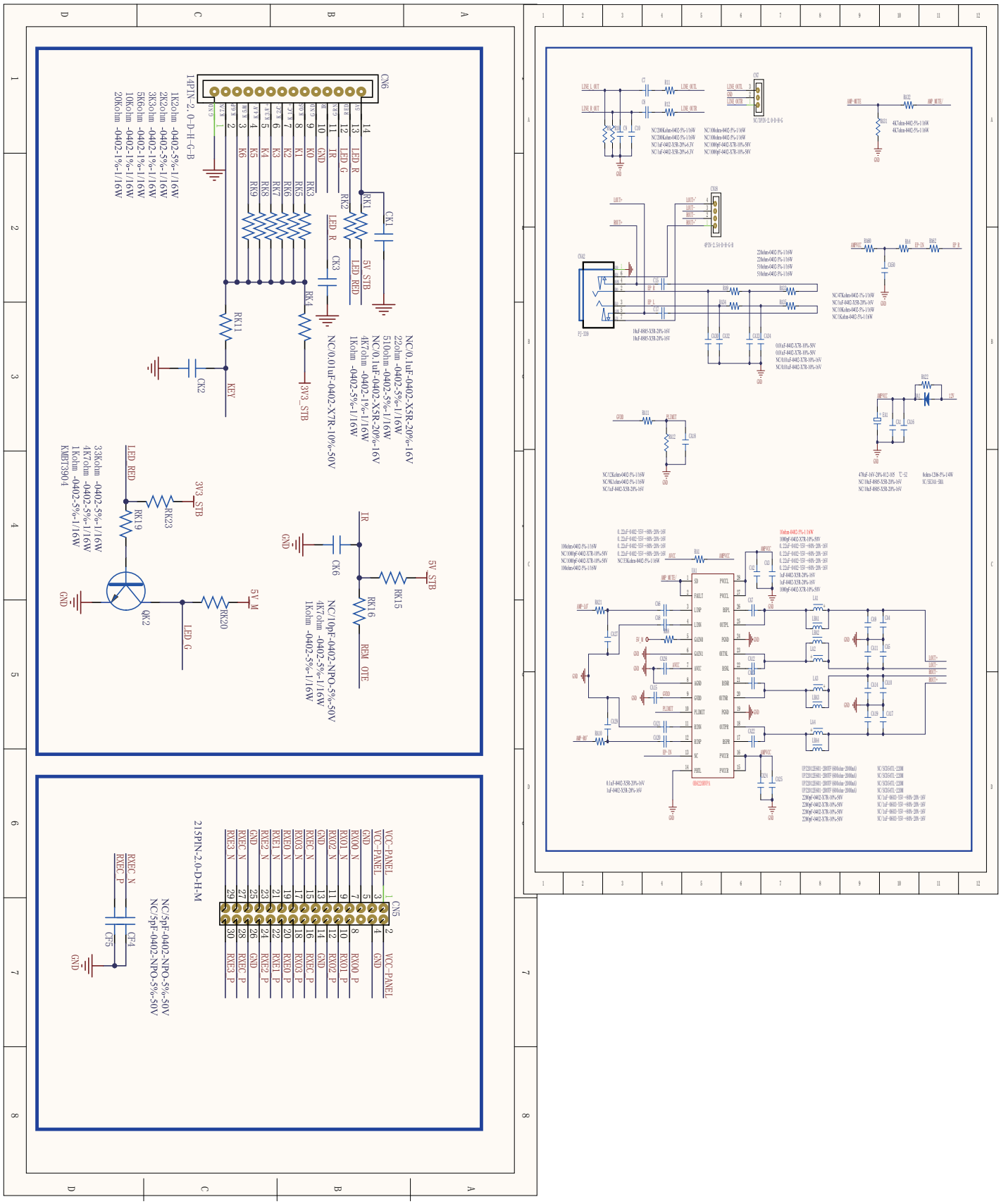

Downloaded from www.Manualslib.com manuals search engine

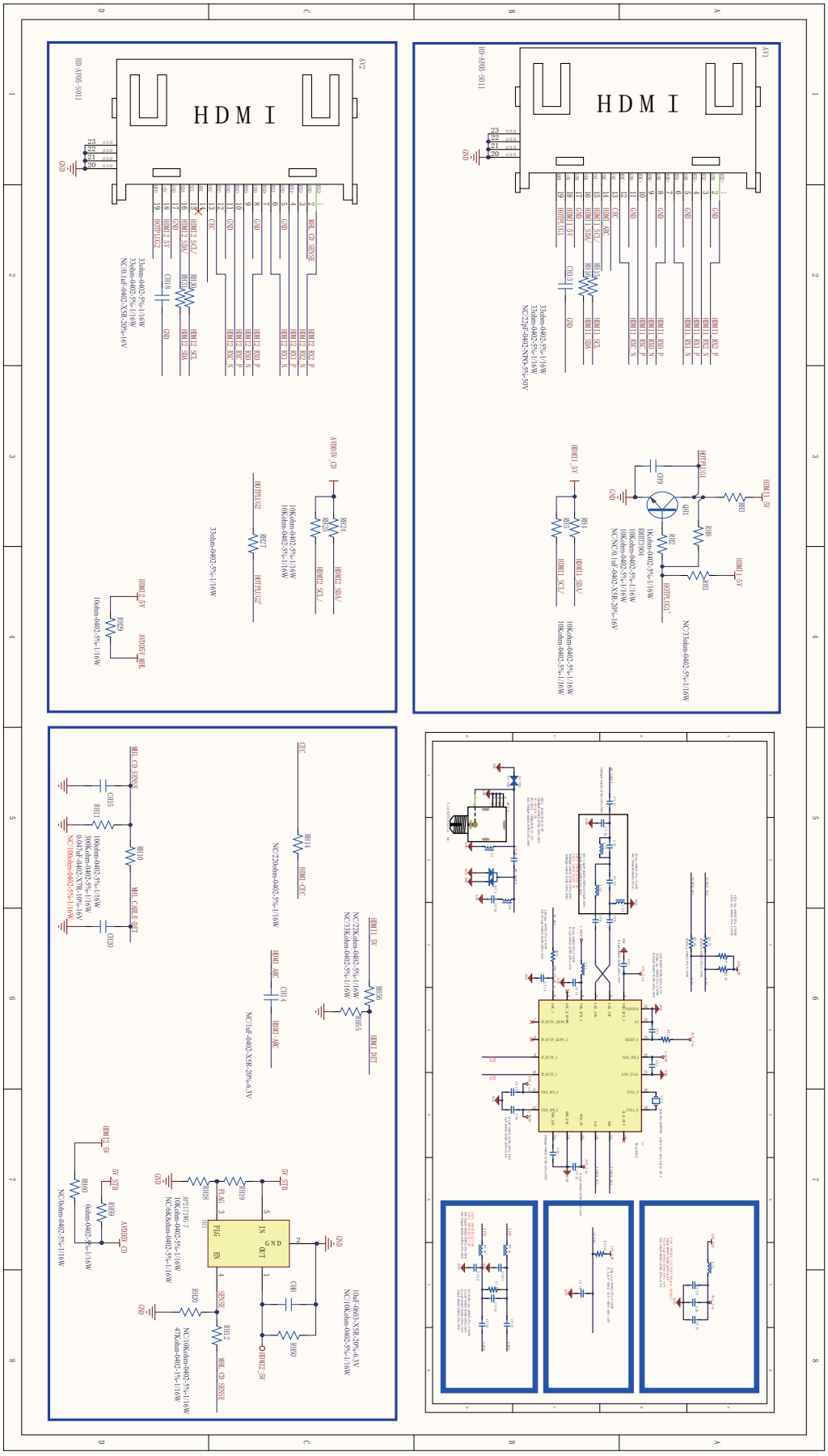

Downloaded from www.Manualslib.com manuals search engine

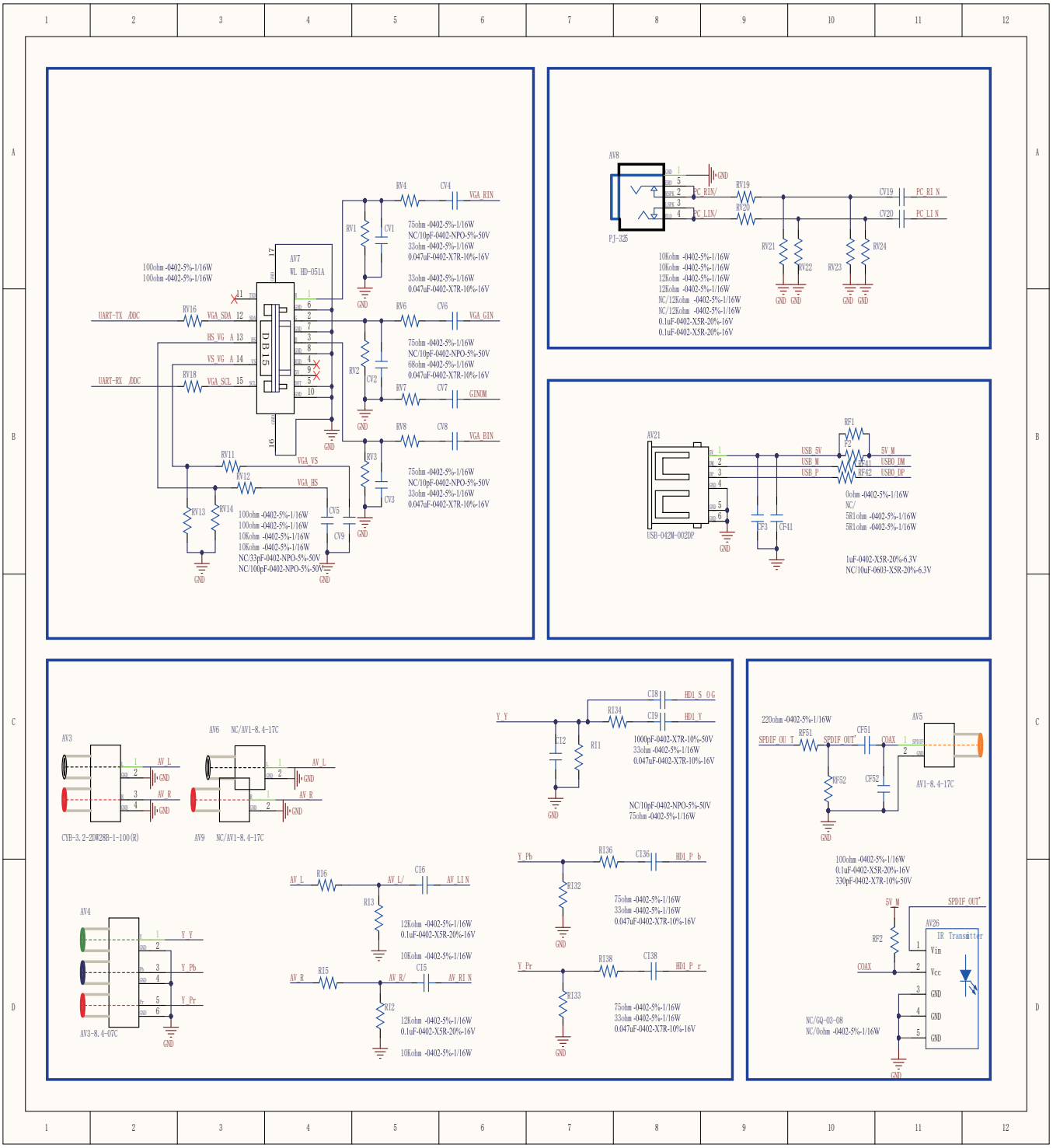

Downloaded from www.Manualslib.com manuals search engine

8-3 Wiring Connection Diagram

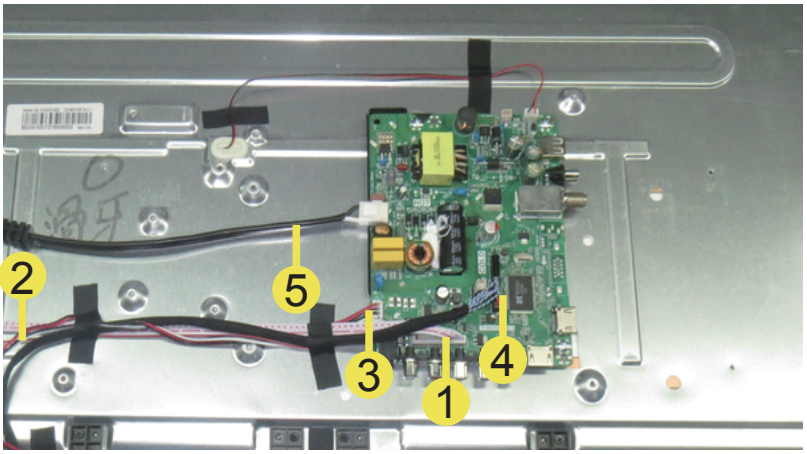

No.	Connection
1	Connection wire for keypad
2	Connection wire for IR LED
3	Connection wire for speakers
4	LVDS wire
5	Connection wire for power

Downloaded from www.Manualslib.com manuals search engine

9. Measurements and Adjustment

9-1 Operation Guide

INITIAL SETUP

The first time you turn on your TV, the setup wizard will guide you through setting up basic settings including the menu language, time zone, and TV signal source.

1. Press ⏻ to turn on the TV. The setup wizard screen opens. Press **OK** to start the wizard.
2. Press ▲/▼ to select Home Mode or Store Mode, then press ► to continue.

Note: Home mode is energy saving mode, store mode is vivid mode.

3. Press ▲/▼ to select your language, then press ► to continue.

4. Press ▲/▼ to select your time zone, then press ► to continue.

5. Press ▲/▼ to select your tuner type, then press ► to start channel scan.

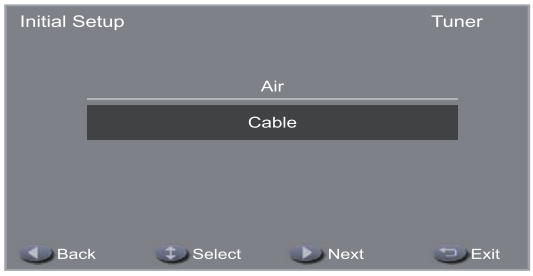

- **Air** – Set the signal type to antenna. When set to Air, the TV can receive analog and digital (ATSC) broadcasting signals.
- **Cable** – Set the signal type to cable. When set to Cable, the TV can receive analog and QAM broadcasting signals.

6. The auto channel scan usually takes a few minutes to complete but can take up to 20 minutes. You can cancel the channel scan by pressing **EXIT**.

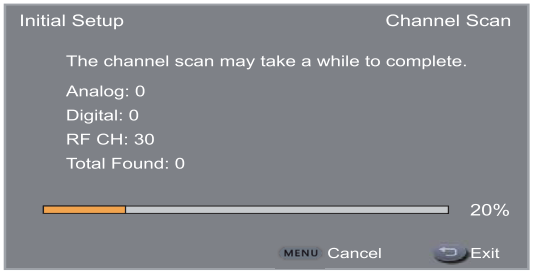

NOTE

- During initial setup, press ◄ to return to the previous screen and press **EXIT** to exit the initial setup.

INPUT SOURCE

Press **INPUT** to open the input source list, then press ▲/▼ to highlight an input and press **OK** to switch.

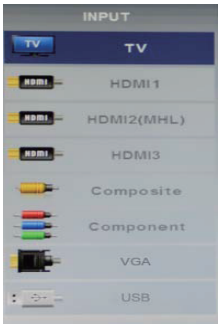

NAVIGATING THE ON-SCREEN MENU

1. Press **MENU** to open the on-screen menu.
2. Press ▲/▼ to select the main menu (Picture/ Audio/Channel/Setup/Lock), then press **OK** or ► to enter the sub-menu.
3. Press ▲/▼ to highlight a sub-menu item, then press ◄/► to adjust the setting or select the desired option.
4. Press **EXIT** to close the on-screen menu.

NOTE

- Press **MENU** to return to the previous menu. If the main menu is displayed, pressing **MENU** will close the on-screen menu.

Downloaded from www.Manualslib.com manuals search engine

PICTURE

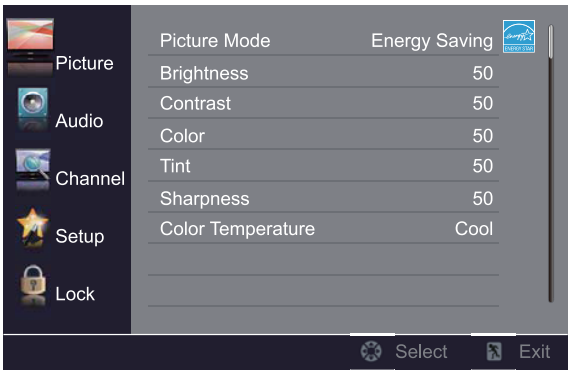

Picture Mode – Select the picture mode. You can select:

- **Standard** – A standard picture. The contrast, brightness, and sharpness are moderately increased.
- **Vivid** – A bright and vivid picture. The contrast, brightness, and sharpness are significantly increased.
- **Mild** – A soft picture. The brightness, contrast and sharpness level are lowered.
- **User** – Customized picture. Picture settings such as brightness, contrast, and color are manually adjusted.
- **Energy Saving** – The backlight brightness is decreased to save energy.

NOTE

- Manually adjusting picture settings will automatically change the **Picture Mode** to **User**.

Brightness – Adjust the brightness of the dark areas of the picture. Press ◄ to darken the picture. Press ► to brighten the picture.

Contrast – Adjust the brightness of the light areas of the picture. Press ◄ to decrease the contrast. Press ► to increase the contrast.

Color – Adjust the color intensity of the picture.

Tint – Adjust the color balance of the picture. Press ◄ to increase the red tones. Press ► to increase the green tones.

Sharpness – Adjust the color details of picture. Press ◄ to soften the picture. Press ► to sharpen the picture.

Color Temperature – Select the color temperature. You can select:

- **Normal** – Give the white color a neutral tint.
- **Warm** – Give the white color a reddish tint.
- **Cool** – Give the white color a bluish tint.

AUDIO

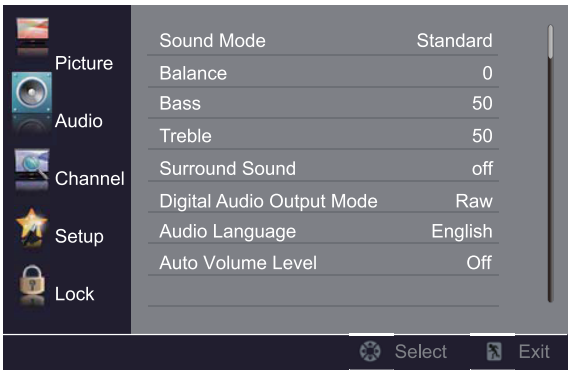

Sound Mode – Select the sound mode. You can select:

- **Standard** – Balanced treble and bass. This setting is good for watching standard TV broadcasts.
- **Music** – Increase the treble and bass and preserve the original sound. This setting is good for listening to a musical program.
- **Theater** – Moderately decrease and enhance treble and bass for a rich sound experience.
- **News** – Balance treble and bass. This setting is good for watching a news program.
- **User** – Let you manually adjust sound settings.

NOTE

- Manually adjusting audio settings will automatically change the **Sound Mode** to **User.**

Balance – Adjust the balance between the left and right audio channels.

Bass – Adjust the low frequency sound. Press ◄ to decrease bass. Press ► to increase the bass.

Treble – Adjust the high frequency sound. Press ◄ to decrease treble. Press ► to increase the treble.

Surround Sound – Activate or deactivate the surround sound function.

Digital Audio Output Mode – Select digital audio output type. You can select:

- **Off** – Set digital audio output off.
- **Raw** – Pass through the original digital audio sound.
- **PCM** – Output audio in 2-channel stereo.

Audio Language – Select an alternate audio language, if available. You can select English/Spanish/French. (Digital channels only)

Auto Volume Level – Adjust the volume to keep the volume level consistent when switching channels or when switching from a TV show to a commercial. You can select On/Off.

Downloaded from www.Manualslib.com manuals search engine

CHANNEL

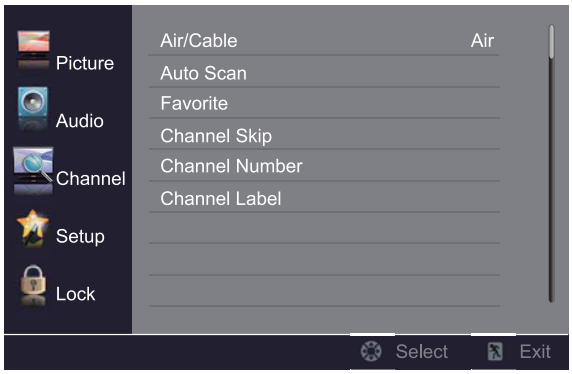

Air/Cable – Select the signal type.

- **Air** – Set the signal type to antenna. When set to **Air**, the TV can receive analog and digital (ATSC) broadcasting signals.
- **Cable** – Set the signal type to cable. When set to **Cable**, the TV can receive analog and QAM broadcasting signals.

Auto Scan – Press **OK** to start the auto channel scan.

Favorite – Manually add and skip channels in your favorite channel list.

Channel Skip – Manually add and skip channels in your channel list.

Channel Number – Select the channel that you want to assign a customized label.

Channel Label – Label a channel to make it easier to identify.

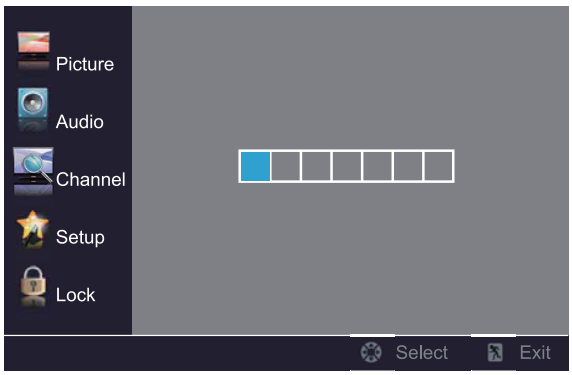

1. Press **OK** to label the selected channel.
2. Press ◀/▶ to select the entry field.
3. Press ▲/▼ to select the desired character for a field.
4. Press **OK** after all the desired characters are entered.

SETUP

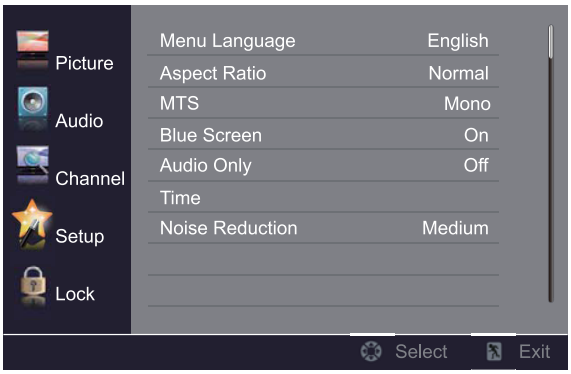

Menu Language – Select on-screen display menu language. You can select English/Français/Español.

Aspect Ratio – Select the display mode. You can select:

- **Normal** – Display the original 4:3 aspect ratio with vertical black bars on the left and right of the image.
- **Wide** – Use this option to view content recorded in a 16:9 (wide-screen) aspect ratio.
- **Zoom** – Expand the image to fill the screen. The top and bottom of the image may be cropped.
- **Cinema** – Stretch the image at the edges, but keeps a clear image in the center.

MTS – Select the preferred sound track. You can select:

- **Mono** – Select this option if there is noise or static from a weak broadcast signal.
- **Stereo** – Select this option for programs broadcast in stereo sound.
- **SAP** – Select this option to enable audio in an alternative language, if available.

Blue Screen – When this option is set to **On**, the screen will be blue instead of black when there is no input signal.

Audio Only – Turn off the TV picture, and listen to the audio.

NOTE

- Audio only works only when the input source is TV and the TV is receiving a broadcast signal.
- To exit audio only mode, press any button.

Time – Adjust the time settings.

Time Zone – Select your time zone.

Sleep Timer – Set the amount of time before the TV automatically turns off.

Daylight Saving Time – Select **On** (if your viewing area observes Daylight Saving Time) or **Off** (if your viewing area does not observe Daylight Saving Time).

Clock – Set the date and time.

English

Downloaded from www.Manualslib.com manuals search engine

Noise Reduction – Select the noise reduction mode to reduce picture noise (snow). You can select Off/Low/Medium/High.

Closed Caption – Adjust the closed captioning settings.

CC Mode – Select closed captioning mode. You can select:

- **CC Off** – Turn off closed captioning.
- **CC On** – Turn on closed captioning.
- **CC on Mute** – Turn on closed captioning when the sound is muted.

Analog CC – Select analog closed captioning mode.

Digital CC – Select digital closed captioning mode.

Option – Customize digital closed captioning settings.

Mode – Select **Custom** to customize below settings or select **Default** to use default settings.

Font Style – Select font style. You can select Default/Font 0~Font 7.

Font Size – Select font size. You can select Default/Normal/Large/Small.

Font Edge Style – Select font edge style. You can select Default/None/Raised/Depressed/Uniform/Left Shadow/Right Shadow.

Font Edge Color – Select font edge color. You can select Default/Black/White/Red/Green/Blue/Yellow/Magenta/Cyan.

FG Color – Select font color. You can select Default/White/Black/Red/Green/Blue/Yellow/Magenta/Cyan.

BG Color – Select background color. You can select Default/Black/White/Red/Green/Blue/Yellow Magenta/Cyan.

FG Opacity – Select font opacity. You can select Default/Solid/Flashing/Translucent/Transparent.

BG Opacity – Select background opacity. You can select Default/Solid/Flashing/Translucent/Transparent.

Over Scan – Extend part of the display past the visible area of the screen. The resulting picture will "zoom in" on the image center.

Restore Default – Reset all settings to the factory defaults.

E-manual–The electronic user manual.

LOCK

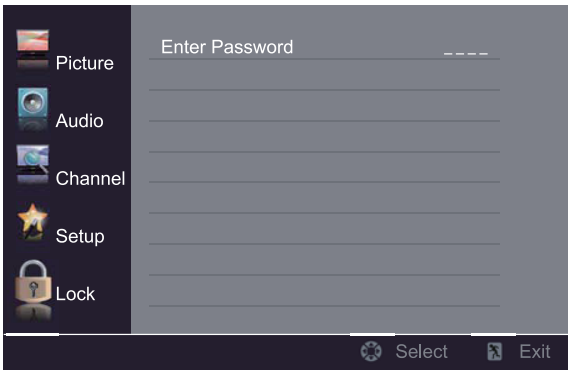

1. Press **OK** or ► to enter password.
2. Use the number buttons on the remote control to enter your 4-digit password. The default password is "0000".
3. After the correct password is entered, the Lock sub-menu screen opens.

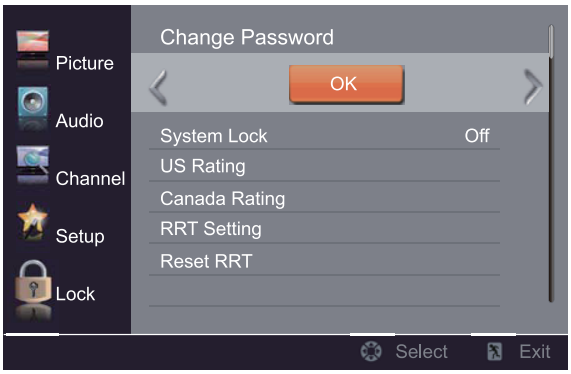

Change Password – Press **OK** to set a new 4-digit password.

Enter Old Password – Enter your old 4-digit password.

Enter New Password – Enter your new 4-digit password.

Confirm Password – Enter your new 4-digit password again to confirm.

System Lock – Turn the US and Canada rating limits on or off.

Downloaded from www.Manualslib.com manuals search engine

US Rating – Set the U.S. rating limits.

TV – U.S. TV ratings. The TV ratings compose of two aspects: age-based and content-based.

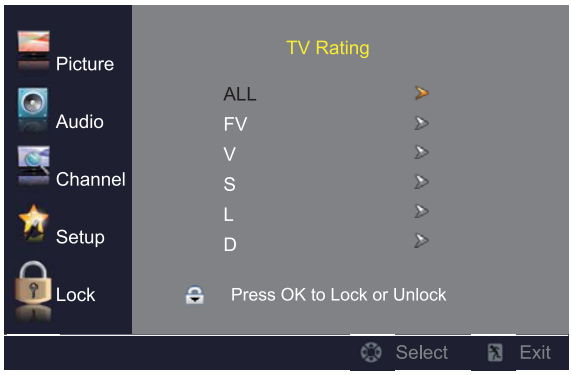

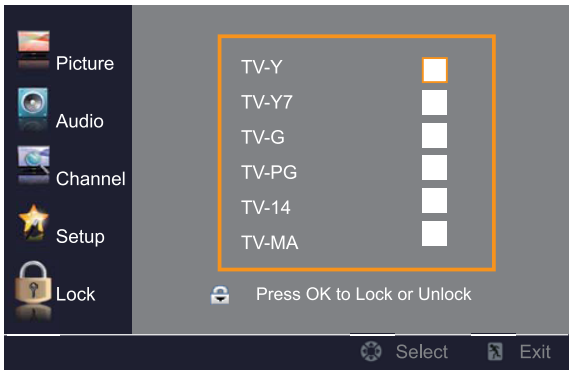

TV rating levels

U.S TV ratings (content-based)	
ALL	All ratings
FV	Fantasy violence
V	Violence
S	Sexual situations
L	Strong language
D	Suggestive dialog

U.S TV ratings (age-based)	
TV-Y	All children.
TV-Y7	Suitable for children 7 and older.
TV-G	General audiences.
TV-PG	Parental guidance suggested.
TV-14	Parental guidance strongly suggested.
TV-MA	Mature audiences only.

MPAA – This system defines the rating control which comes from MPAA rules.

MPAA rating levels

U.S movie (MPAA) ratings	
G	General audiences.
PG	Parental guidance suggested.
PG-13	Suitable for children 13 and older.
R	Parental guidance suggested for children under 17.
NC-17	Not suitable for children under 17.
X	Adults only.

Canada Rating – Set the Canada rating limits.

Canada English – The ratings are for programs using the English rating system.

Canada English rating levels

Canadian English ratings	
C	Suitable for all children.
C8+	Suitable for children 8 and older.
G	General audiences.
PG	Parental guidance suggested.
14+	Suitable for children 14 and older.
18+	Adults only.

Canada French – The ratings are for programs using the French rating system.

Canada French rating levels

Canadian French ratings	
G	General audiences.
8 ans+	Suitable for children 8 and older.
13 ans+	Suitable for children 13 and older.
16 ans+	Suitable for children 16 and older.
18 ans+	Adults only.

NOTE

- When a rating is locked, that rating and all other higher ratings are locked. When a rating is unlocked, that rating and all lower ratings are unlocked.

RRT Setting – Adjust RRT settings.

Reset RRT – Reset RRT settings to the factory default.

English

Downloaded from www.Manualslib.com manuals search engine

MEDIA

The USB Media Player allows you to connect a USB device to your TV and play music or photos.

1. Connect your USB device to the USB port on the rear of the TV.

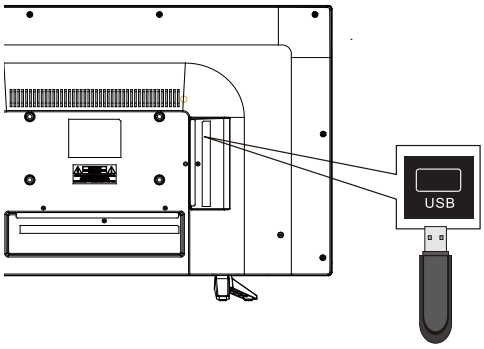

2. Press **INPUT** and select **USB**, or press **USB** on the remote control to switch to USB input.

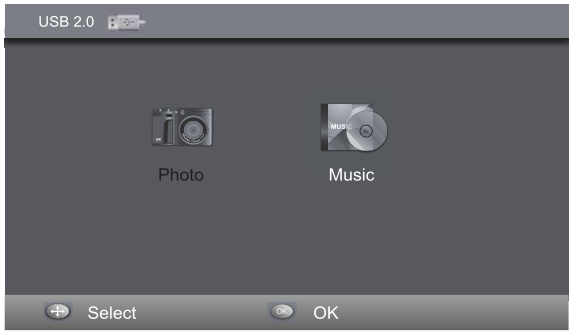

3. Press ◄/► to highlight **Photo** or **Music**, then press **OK**.

   Press ◄/► to highlight **C**, then press **OK** to view the files or folders.

4. Press ◄/►/▲/▼ to select the file that you want to play, then press **OK**.
5. To navigate the playback, press ◄/► to highlight an option on the operation banner, then press **OK** to execute.

Photo

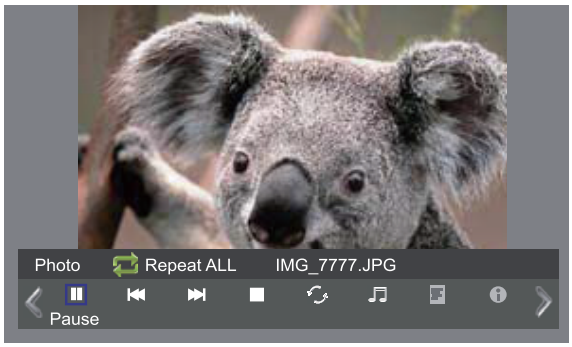

1. Press ◄/► to highlight an option, then press **OK** to execute.

- Select ❚❚/► or press ►❚❚ on the remote control to pause or resume slide show playback.
- Select ❙◄◄ to display the previous photo.
- Select ►►❙ to display the next photo.
- Select ■ stop slide show play back.
- Select ⟲ to change repeat mode. You can select Repeat One/Repeat ALL/None.
- Select ♫ to play the music in the current folder. To stop the music playback, highlight ♫ and press **OK** again.
- Select ☰ to display the play list. Press **EXIT** to close the list.
- Select ⓘ to show file information such as file name, resolution, size, date and time. Press **OK** to close the information screen.
- Select ↻ to rotate the photo 90° clockwise.
- Select ↺ to rotate the photo 90° counterclockwise.
- Select ⊞ to zoom in on the photo.
- Select ⊟ to zoom out on the photo.
- Select ✥ to view a zoomed photo. Press ◄/►/▲/▼ on the remote control to move and view the photo in detail. Press **EXIT** to exit.

Music

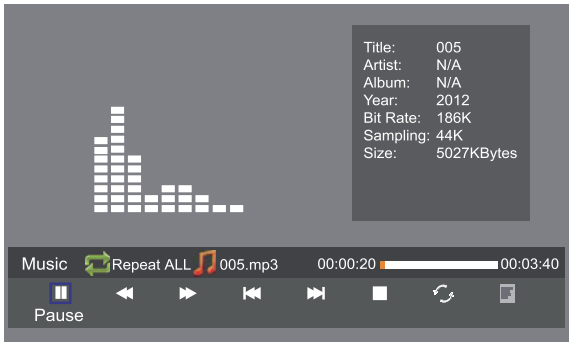

1. Press ◄/► to highlight an option, then press **OK** to execute.

- Select ❚❚/► or press ►❚❚ on the remote control to pause or resume music playback.
- Select ◄◄ or press ◄◄ on the remote control to fast reverse music playback.
- Select ►► or press ►► on the remote control to fast forward music playback.
- Select ❙◄◄ to play the previous music file.
- Select ►►❙ to play the next music file.
- Select ■ to stop music play back.
- Select ⟲ to change repeat mode. You can select Repeat One/Repeat ALL/None.
- Select ☰ to display the song list. Press **EXIT** to close the song list.

NOTE

- In photo and music mode, press **EXIT** to close the operation banner, and press **OK** to open it again.
- In music mode, before pressing ◄/► to adjust the volume level, press **EXIT** to close the operation banner first.

Downloaded from www.ManualsLib.com manuals search engine

TIPS

Care of the screen

Do not rub or strike the screen with anything hard as this may scratch, mar, or damage the screen permanently.

Unplug the power cord before cleaning the screen. Dust the TV by wiping the screen and the cabinet with a soft, clean cloth. If the screen requires additional cleaning, use a clean, damp cloth. Do not use liquid cleaners or aerosol cleaners.

Mobile telephone warning

To avoid disturbances in picture and sound, malfunctioning of your TV or even damage to the TV, keep your mobile telephone away from the TV.

End of life directives

We are paying a lot of attention to produce environmentally friendly products. Your new television contains materials, which can be recycled and reused.

At the end of its life, specialized companies can dismantle the discarded receiver to collect the reusable materials and to minimize the amount of materials to be disposed of.

Please ensure you dispose of your old receiver according to local regulations. Haier is committed to safely recycling electronic products and product materials. Please check for a local recycling location in the United States at: 1800RECYCLING.COM.

LEGAL NOTICES

Modifications

The FCC requires the user to be notified that any changes or modifications made to this device that are not expressly approved by our company may void the user's authority to operate the equipment.

Cables

Connections to this device must be made with shielded cables with metallic RF/EMI connector hoods to maintain compliance with FCC Rules and Regulations.

Canada ICES-003 statement

This Class B digital apparatus complies with Canadian ICES-003. Standard Television Receiving Apparatus — Appareil de réception télévision ordinaire, Canada BETS-7/NTMR-7.

Canadian notice

This Class B digital apparatus meets all requirements of the Canadian Interference-Causing Equipment Regulations.

Avis Canadian

Cat apparel numerous de la classed B respected toutes les exigencies du règlement sur le materiel brouilleur du Canada.

HDMI™
HIGH-DEFINITION MULTIMEDIA INTERFACE

HDMI, the HDMI logo, and High-Definition Multimedia Interface are trademarks or registered trademarks of HDMI Licensing LCC in the United States and other countries.

English

Downloaded from www.Manualslib.com manuals search engine

9-2 Factory Mode

1.1 Power on Upgrading

STEP 1： Make sure that the .bin file has been put under the root directory of USB removable device.

STEP 2： Link the USB device to the TV mainboard , make sure the current is switched off ,re-power on .If the LED light turns out to be red alternating with green ,it means the upgrading is on process .

The blinks goes to be slowly, when the burning flash has finished, it will to be the success light.

1.1.1 Upgrading

The red light and the green light switch slowly, for one second once.

Red…green…red…green…

1.1.2 Upgrade successful

The light turns to be red for twice quickly, and the mains green for half second.

Red…red…green……red…red…green……

1.1.3 Failed

The red light and the green light switch quickly, for five times per second.

Red…green…Red…green…Red…green…Red…green…Red…green…

STEP 3： Disconnect to the power and the connect to the power, then the upgrading could be finished.

1.2 Factory Setting Upgrading

STEP 1： Make sure that the .bin file has been put under the root directory of USB removable device.

STEP 2： Link the USB device to the TV mainboard, press <MENU>+1147 of the remote control to enter the factory setting.

STEP 3： Search for the 'Software Upgrade(USB)' item by the remote control ,just like the picture 1.1:

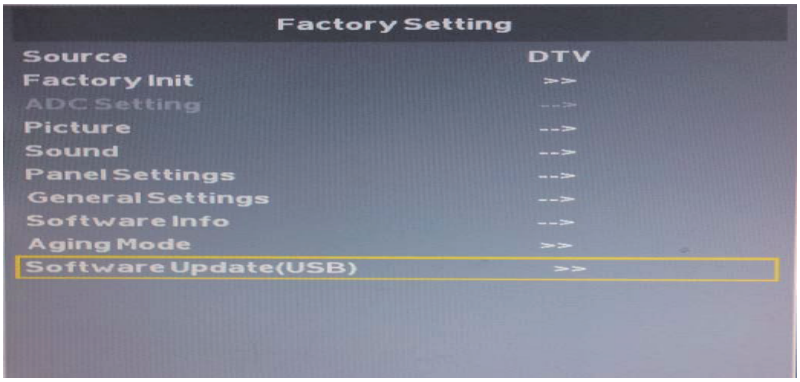

Picture 1.1

STEP 4： Enter the upgrading menu and chose 'Yes', as shown in figure 1.2. The LED light turns out to be red alternating with green represents the upgrading has begun. when the burning flash has finished, LED the red green alternating flashing light slowly and the menu prompts to disconnect the power, as shown in figure 1.3.

Downloaded from www.Manualslib.com manuals search engine

9-3 Software Update

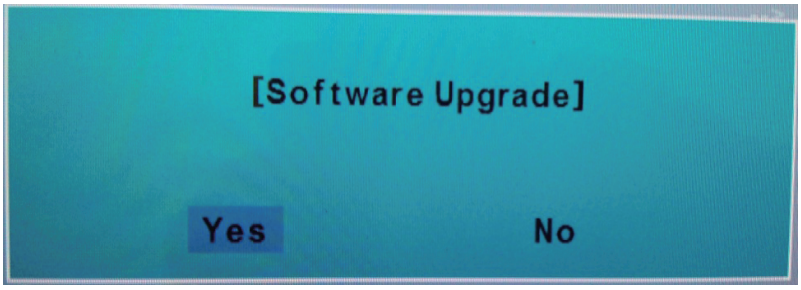

Picture 1.2

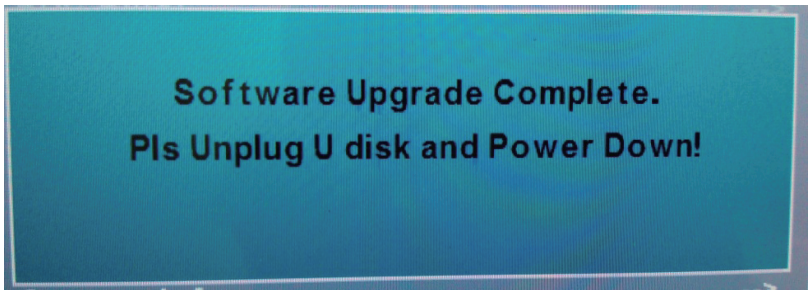

Picture 1.3

STEP 5： Disconnect to the power and connect to the power, the upgrading could be finished.

9-4 Hotel Mode

Hotel mode allows user to set certain default settings, limit access to certain controls and adjustments so that settings cannot be altered by other people. See “Hotel Mode” on page 40 for more information.

Downloaded from www.Manualslib.com manuals search engine

10. Troubleshooting

10-1 Simple Check

Please make these simple checks before calling service. These tips may save you time and money since charges for receiver installation and adjustments of customer controls are not covered under your warranty.

Symptoms	Items to Check and Actions to Follow
No power	• Check if the TV's AC power cord is plugged into a working power outlet. • Unplug the TV, and wait 60 seconds. Then reinsert plug into the working power outlet and turn on the TV again.
No picture	• Make sure correct input source is selected. • Check antenna connection on the back of the TV to see if it is properly connected. • Possible broadcast station trouble. Try another channel. • Adjust the picture contrast and brightness settings.
Good picture but no sound	• Increase the volume level by pressing ◿+ button on the remote control or **VOL+** button on TV side control panel. • Press 🔇 button on the remote control to ensure mute is off.
Good sound but poor color	• Adjust the contrast, color and brightness settings.
Poor picture	• Poor picture quality may occur when an activated S-VHS camera or camcorder is connected to your TV and the other peripheral at the same time. Switch off one of the peripherals.
Snowy picture and noise	• Check the antenna connection.
TV not responding to remote control	• Check whether the batteries are working. Replace if necessary. • Make sure the remote control batteries are installed correctly. • You can still use the control buttons on the side of your TV.
TV not working	• Disconnect the TV from the power supply for 10 seconds, then reconnect the TV. If the problem persists, contact authorised service personnel for technical assistance.
No file displayed in USB mode	• Make sure you select correct media type. • Make sure the stored files are in supported format.

Downloaded from www.Manualslib.com manuals search engine

10-2-1 AC/DC Power Board Diagram

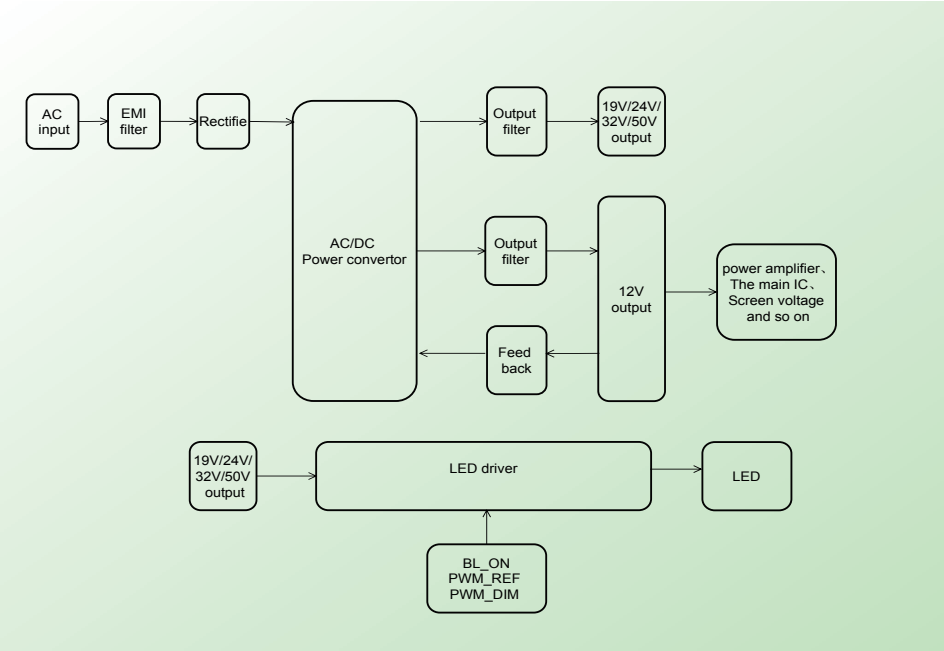

10-2-2 AC/DC Power Supply Trouble

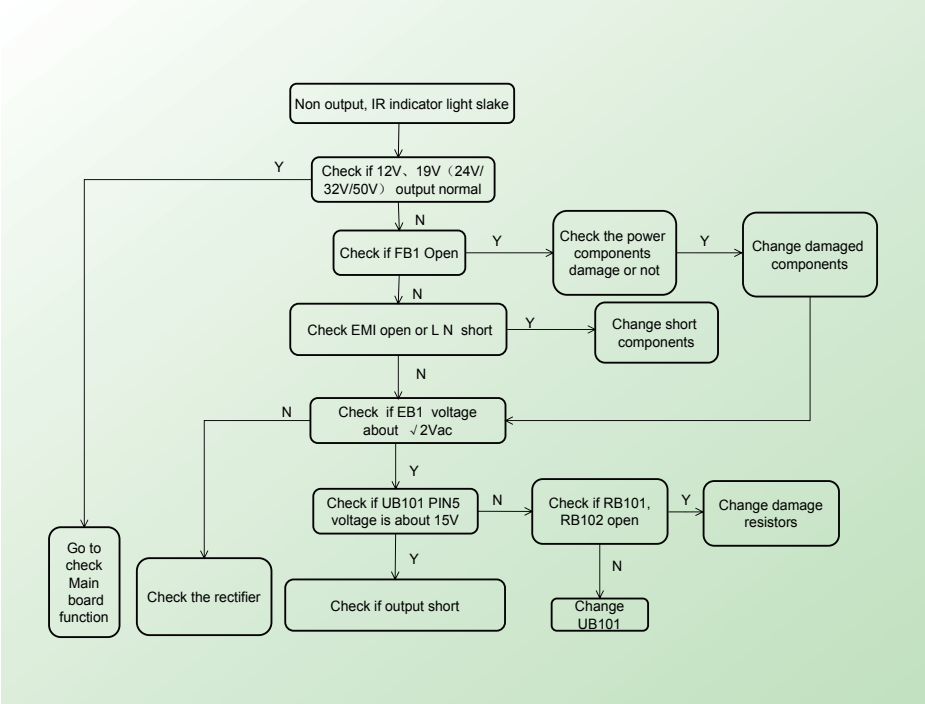

Downloaded from www.Manualslib.com manuals search engine

10-2-3 LED driver Trouble

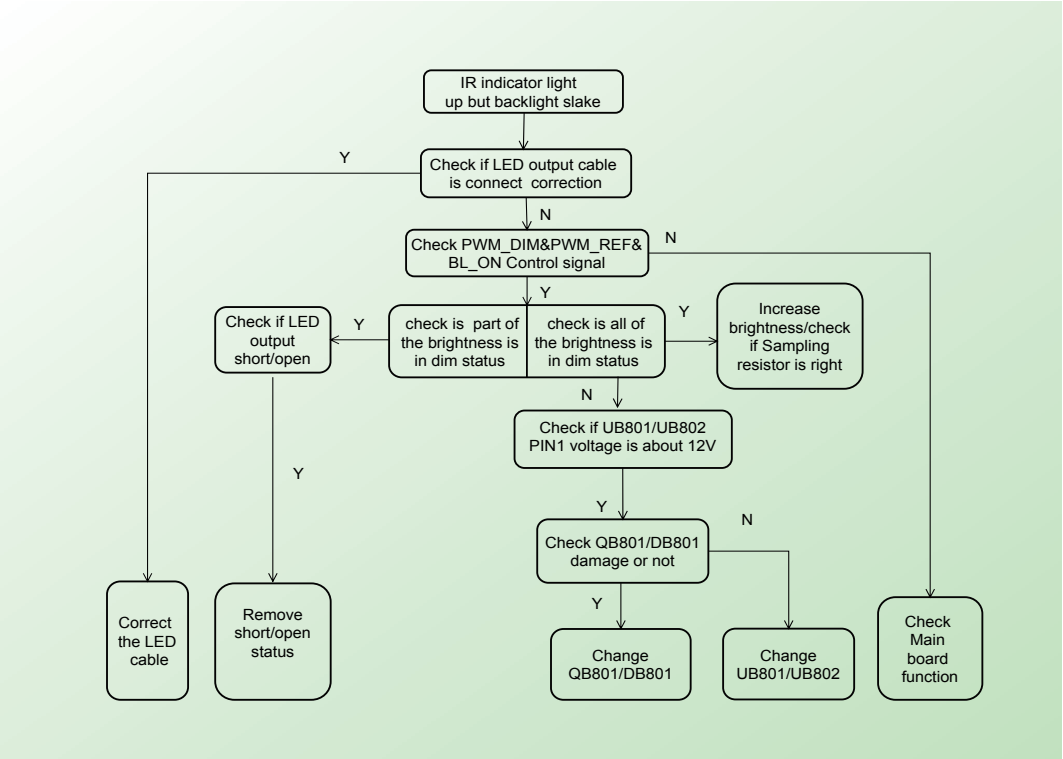

10-2-4 DC/DC Power Supply Trouble

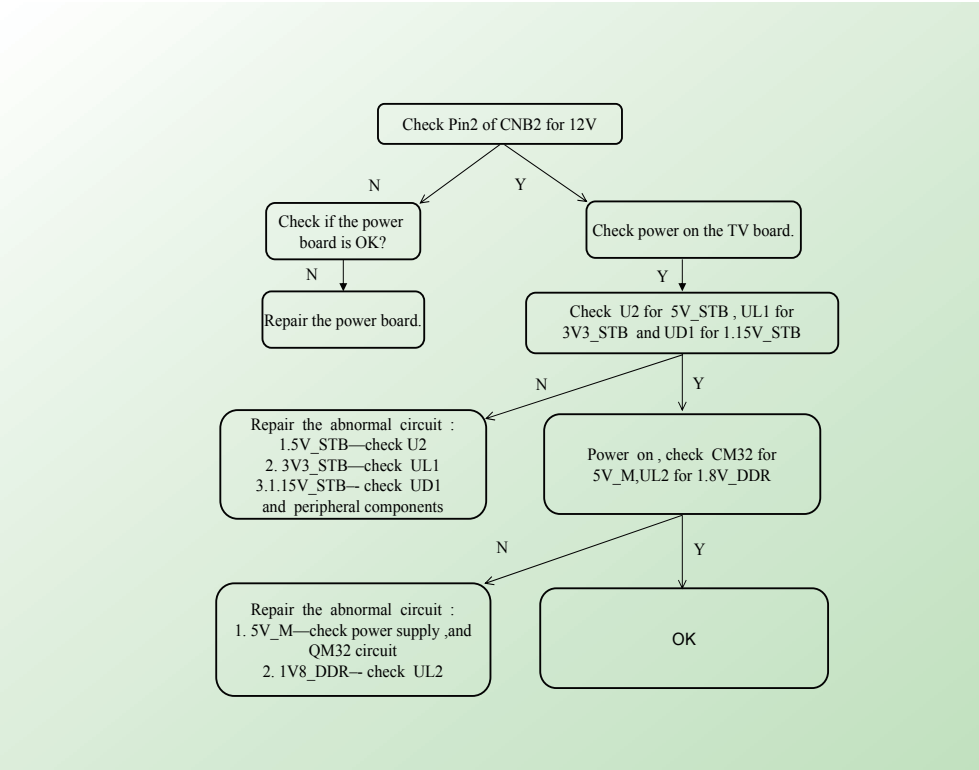

Downloaded from www.Manualslib.com manuals search engine

10-3-1 Display Trouble (blurred screen)

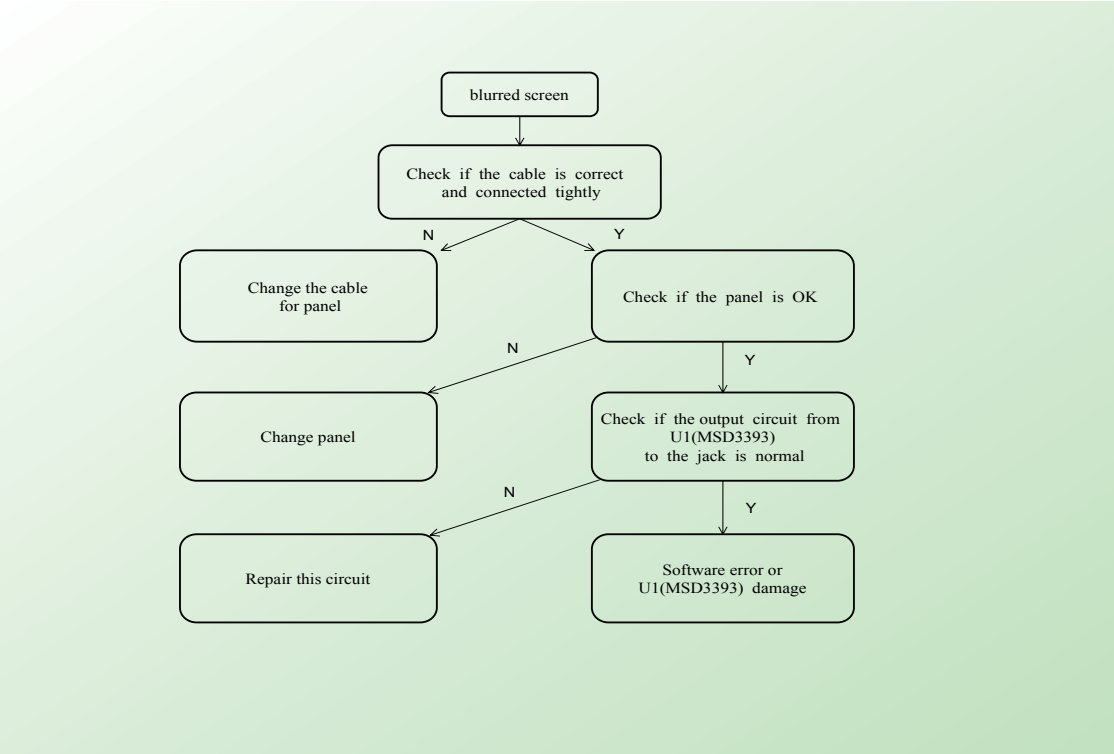

10-3-2 Display Trouble (white screen)

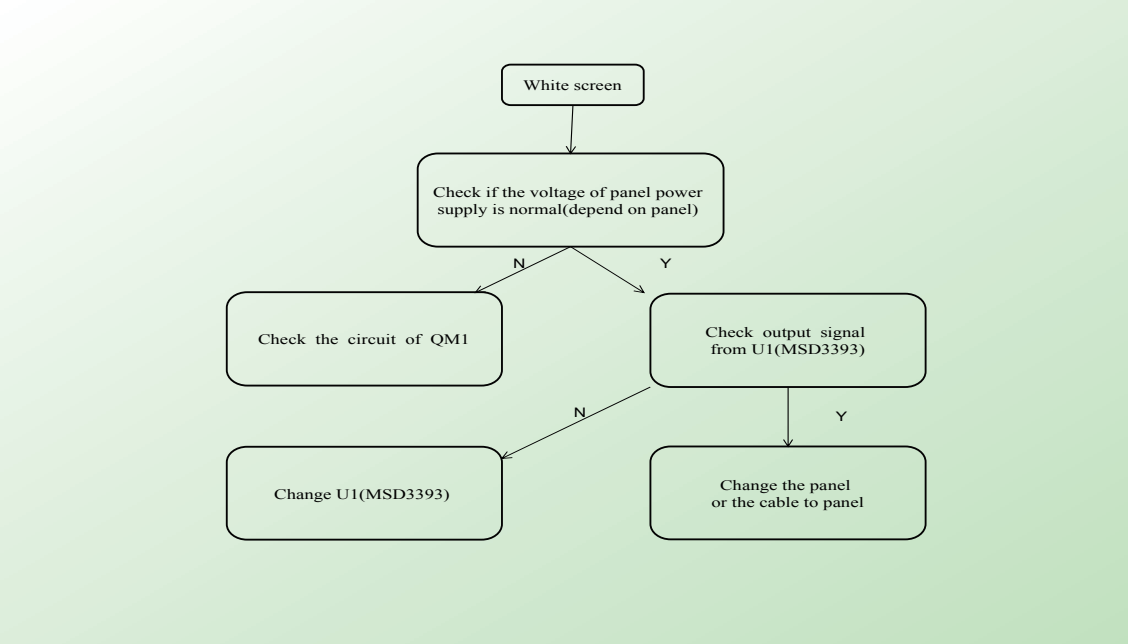

Downloaded from www.Manualslib.com manuals search engine

10-3-3 Display Trouble (black screen)

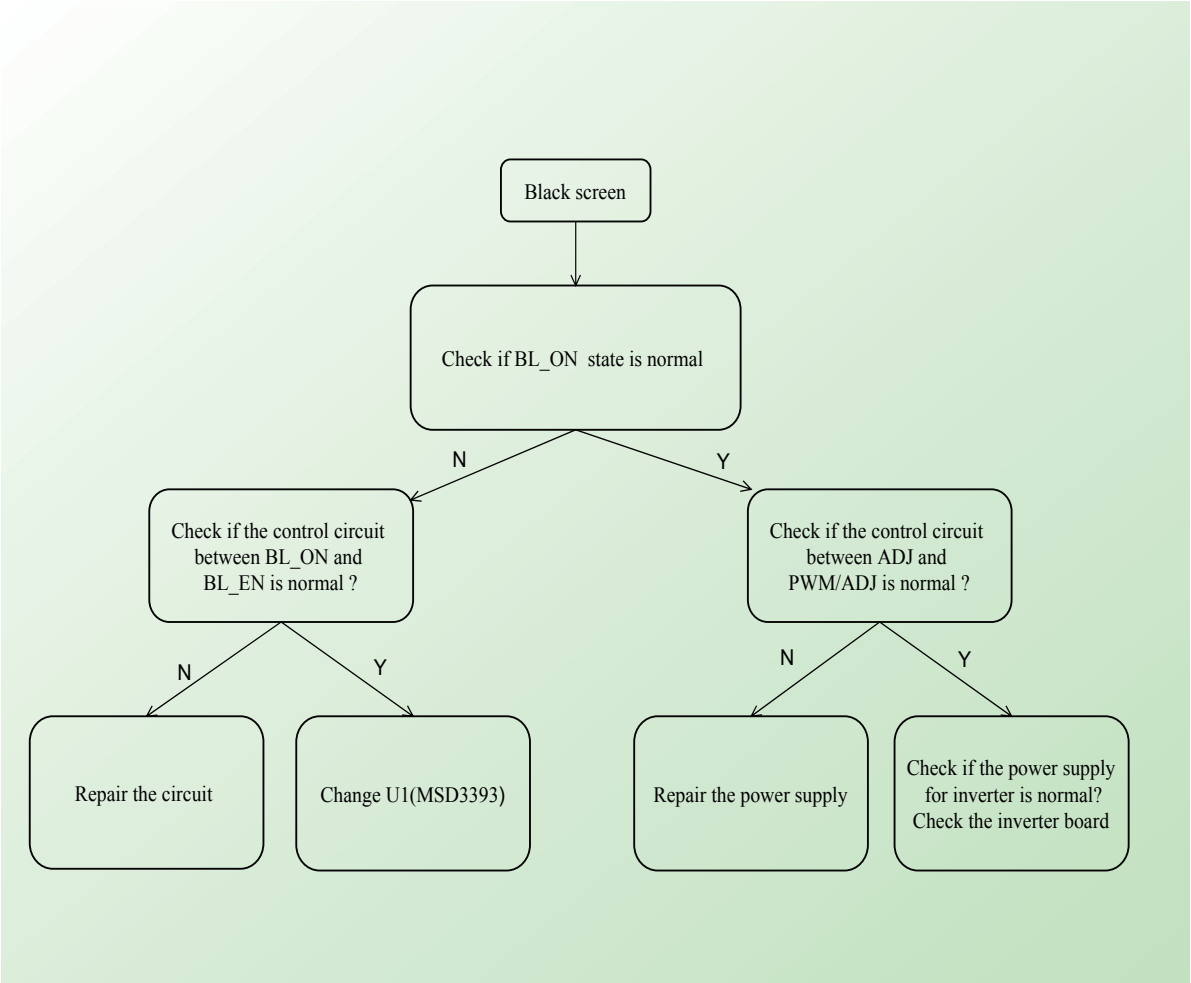

Downloaded from www.Manualslib.com manuals search engine

10-4-1 Audio Trouble

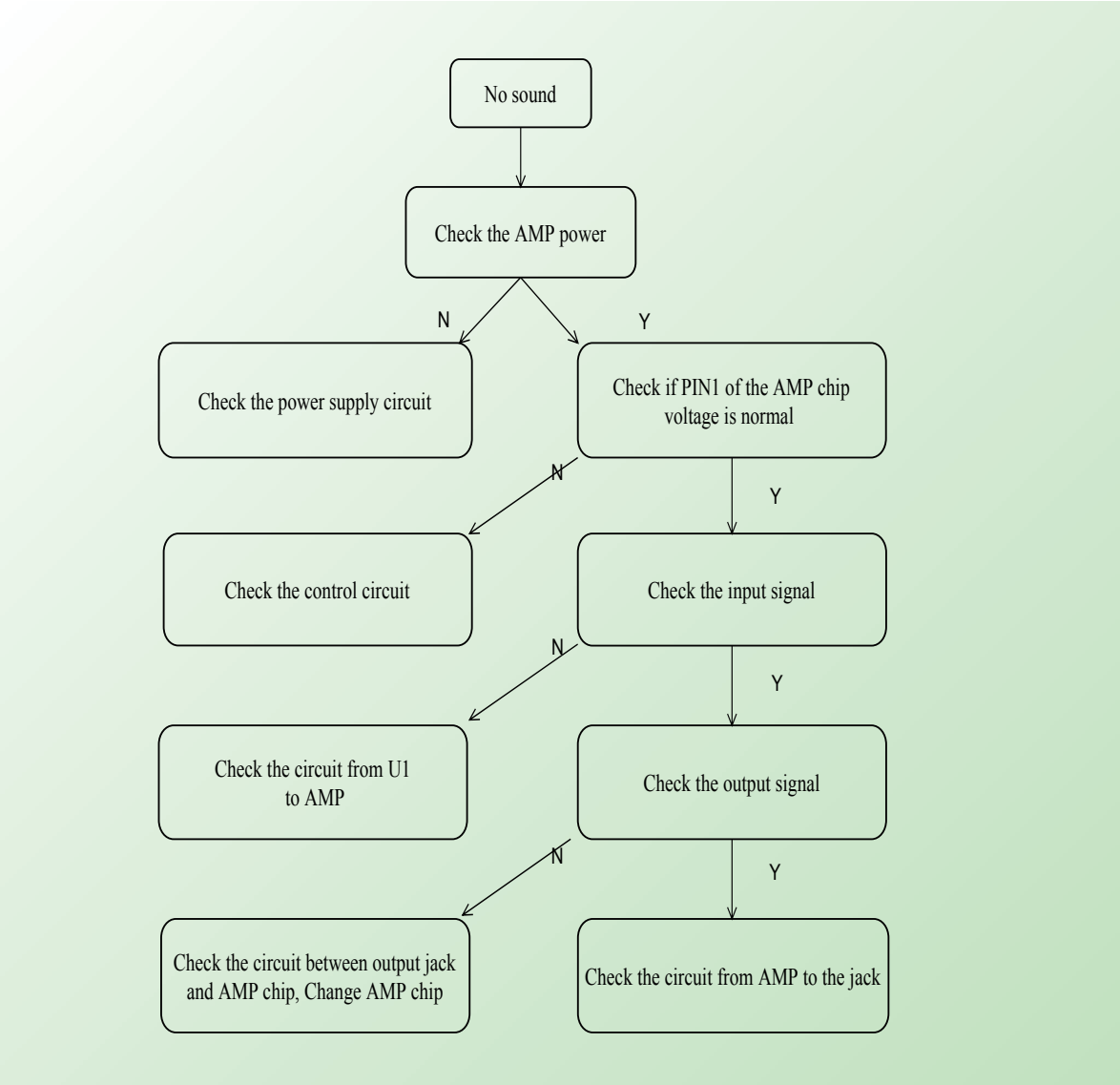

Downloaded from www.Manualslib.com manuals search engine

10-5-1 Function Trouble (TV video)

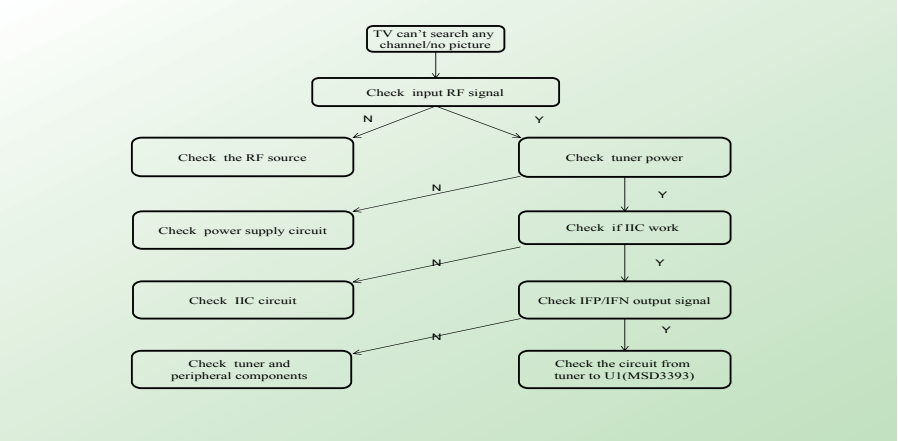

10-5-2 Function Trouble (PC)

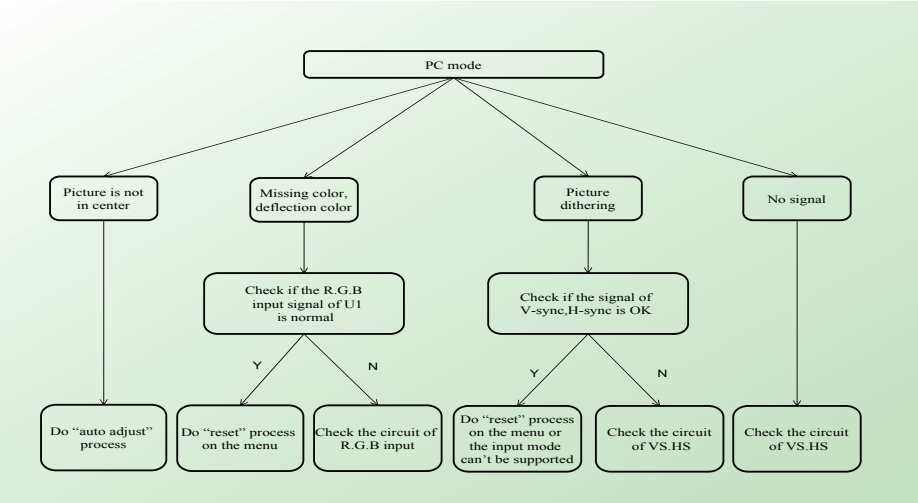

10-5-1 Function Trouble (HDMI、YPbPr 、CVBS)

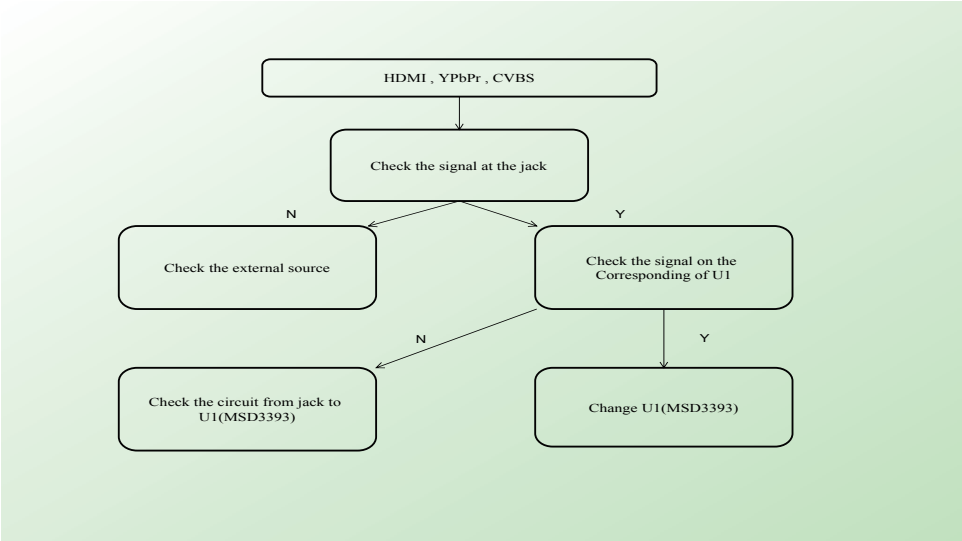

Downloaded from www.Manualslib.com manuals search engine