Pioneer

Service Manual

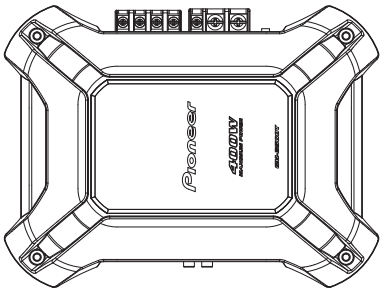

GM-3500T/XZUC

ORDER NO.
CRT4708

BRIDGEABLE TWO-CHANNEL POWER AMPLIFIER

GM-3500T /XZUC
GM-3500T /XZEW5
GM-3500T /XZES

For details, refer to "Important Check Points for Good Servicing".

PIONEER CORPORATION 1-1, Shin-ogura, Saiwai-ku, Kawasaki-shi, Kanagawa 212-0031, Japan
PIONEER ELECTRONICS (USA) INC. P.O. Box 1760, Long Beach, CA 90801-1760, U.S.A.
PIONEER EUROPE NV Haven 1087, Keetberglaan 1, 9120 Melsele, Belgium
PIONEER ELECTRONICS ASIACENTRE PTE. LTD. 253 Alexandra Road, #04-01, Singapore 159936
ⓒ**PIONEER CORPORATION 2011**

K-ZZZ APR. 2011 Printed in Japan

SAFETY INFORMATION

CAUTION

This service manual is intended for qualified service technicians; it is not meant for the casual do-it-yourselfer. Qualified technicians have the necessary test equipment and tools, and have been trained to properly and safely repair complex products such as those covered by this manual.
Improperly performed repairs can adversely affect the safety and reliability of the product and may void the warranty.
If you are not qualified to perform the repair of this product properly and safely, you should not risk trying to do so and refer the repair to a qualified service technician.

WARNING

This product may contain a chemical known to the State of California to cause cancer, or birth defects or other reproductive harm.
Health & Safety Code Section 25249.6 - Proposition 65

Where in a manufacturer's service documentation, for example in circuit diagrams or lists of components, a symbol is used to indicate that a specific component shall be replaced only by the component specified in that documentation for safety reasons, the following symbol shall be used:

⚠

CONTENTS

SAFETY INFORMATION 2
1. SERVICE PRECAUTIONS 3
1.1 SERVICE PRECAUTIONS 3
1.2 NOTES ON SOLDERING 5
2. SPECIFICATIONS 6
2.1 SPECIFICATIONS 6
3. BASIC ITEMS FOR SERVICE 7
3.1 CHECK POINTS AFTER SERVICING 7
3.2 JIGS LIST 7
4. BLOCK DIAGRAM 7
5. DIAGNOSIS 8
5.1 CONNECTOR FUNCTION DESCRIPTION 8
6. SERVICE MODE 8
7. DISASSEMBLY 9
8. EACH SETTING AND ADJUSTMENT 10
9. EXPLODED VIEWS AND PARTS LIST 12
9.1 PACKING 12
9.2 EXTERIOR 14
10. SCHEMATIC DIAGRAM 16
10.1 PCB KIT (GUIDE PAGE) 16
11. PCB CONNECTION DIAGRAM 22
11.1 PCB KIT 22
12. ELECTRICAL PARTS LIST 26

1. SERVICE PRECAUTIONS

1.1 SERVICE PRECAUTIONS

1. You should conform to the regulations governing the product (safety, radio and noise, and other regulations), and should keep the safety during servicing by following the safety instructions described in this manual.
2. Be careful in handling ICs. Some ICs such as MOS type are so fragile that they can be damaged by electrostatic induction.
3. When you tighten the screws of following figure, tightly hold a transistor or a diode to be fixed to prevent the part from turning by the force of tightening the screw.
   (If the part turned, a stress will be applied to the solder and may cause a failure such as a solder crack.)

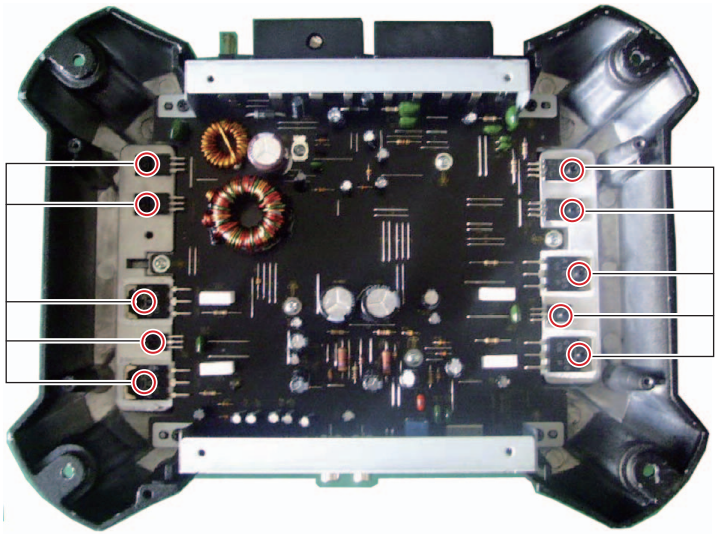

4. Please install Insulator between Power Transistor and Heat Sink when you install Power Transistor in Heat Sink. If Insulator is not installed between Power Transistor and Heat Sink, Power Transistor might be damaged.

6. When you replace a part fixed to the heatsink (Q138, Q141, Q142, D6, D7, Q238, Q241, Q242, Q7 and Q8), adjust the position of the part according to the following.

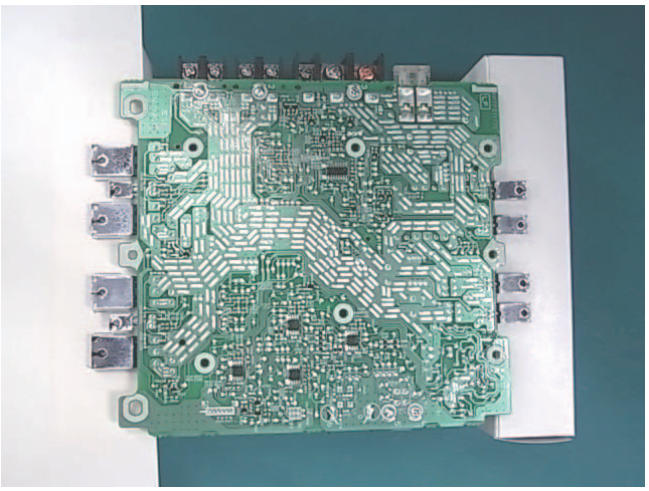

Put the Amp Unit on blocks.

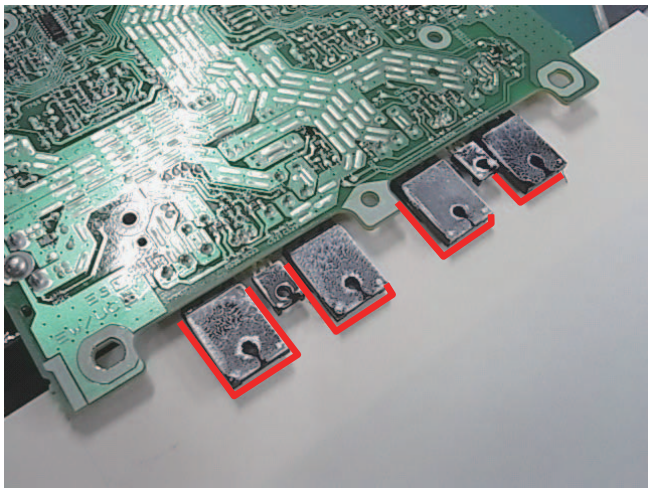

Put a paper between the block and the Amp Unit, and outline transistors and diodes.
Put a part to replace in the outline.

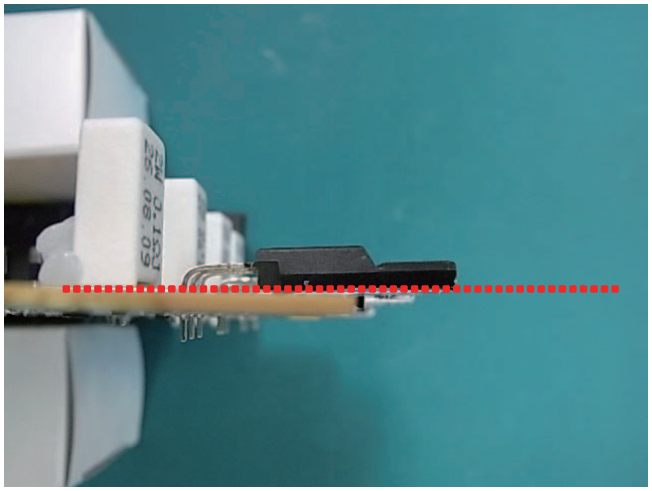

Align the bottom of a transistor or a diode with the top of the PC board, and solder it.
Apply grease, GEM1057 to the back of the part.

Note : Even if the unit shown in the photos and illustrations in this manual may differ from your product, the procedures described here are common.

1.2 NOTES ON SOLDERING

- For environmental protection, lead-free solder is used on the printed circuit boards mounted in this unit.
  Be sure to use lead-free solder and a soldering iron that can meet specifications for use with lead-free solders for repairs accompanied by reworking of soldering.

- Compared with conventional eutectic solders, lead-free solders have higher melting points, by approximately 40 ℃.
  Therefore, for lead-free soldering, the tip temperature of a soldering iron must be set to around 373 ℃ in general, although the temperature depends on the heat capacity of the PC board on which reworking is required and the weight of the tip of the soldering iron.

Compared with eutectic solders, lead-free solders have higher bond strengths but slower wetting times and higher melting temperatures (hard to melt/easy to harden).

The following lead-free solders are available as service parts:
- Parts numbers of lead-free solder:
  GYP1006 1.0 in dia.
  GYP1007 0.6 in dia.
  GYP1008 0.3 in dia.

2. SPECIFICATIONS

2.1 SPECIFICATIONS

• GM-3500T/XZUC

Power source ..... 14.4 V DC (10.8 V to 15.1 V allowable)
Grounding system ..... Negative type
Current consumption ..... 15 A (at continuous power, 4 Ω)
Average current drawn ..... 4 A (4 Ω for two channels)
7 A (4 Ω for one channel)
Backup current ..... 1 mA or less
Fuse ..... 25 A × 1
Dimensions (W × H × D) ... 289 mm × 62 mm × 219 mm
(11-3/8 in. × 2-1/2 in. × 8-5/8 in.)
Weight ..... 2.0 kg (4.4 lbs)
(Leads for wiring not included)
Maximum power output ..... 400 W (200 W × 2)
Continuous power output ... 60 W × 2 (at 14.4 V, 4 Ω, 20 Hz to 20 kHz, ≦ 1.0 % THD +N)
185 W × 1 (at 14.4 V, 4 Ω BRIDGE 1 kHz, ≦ 1.0 % THD +N)
85 W × 2 (at 14.4 V, 2 Ω, 1 kHz, ≦ 1.0 % THD+N)
Load impedance ..... 4 Ω (2 Ω to 8 Ω allowable)
Frequency response ..... 10 Hz to 70 kHz (+0 dB,–3 dB)
Signal-to-noise ratio ..... 98 dB (IHF-A network)
Distortion ..... 0.05 % (10 W, 1 kHz)
Low pass filter:
Cut off frequency ..... 80 Hz
Cut off slope ..... –12 dB/oct
Gain control:
RCA ..... 200 mV to 6.5 V
Speaker ..... 0.8 V to 26 V
Maximum input level / impedance:
RCA ..... 6.5 V / 22 kΩ
Speaker ..... 26 V / 22 kΩ

CEA2006 Specifications

Power output ..... 60 W RMS × 2 Channels (at 14.4 V, 4 Ω and ≦ 1 % THD +N)
S/N ratio ..... 80 dBA (reference: 1 W into 4 Ω)

Notes

- Specifications and the design are subject to modifications without notice.
- The average current drawn is nearly the maximum current drawn by this unit when an audio signal is input. Use this value when working out total current drawn by multiple power amplifiers.

• GM-3500T/XZEW5, XZES

Power source ..... 14.4 V DC (10.8 V to 15.1 V allowable)
Grounding system ..... Negative type
Current consumption ..... 15 A (at continuous power, 4 Ω)
Average current drawn ..... 4 A (4 Ω for two channels)
7 A (4 Ω for one channel)
Backup current ..... 1 mA or less
Fuse ..... 25 A × 1
Dimensions (W × H × D) ... 289 mm × 62 mm × 219 mm
Weight ..... 2.0 kg (Leads for wiring not included)
Maximum power output ..... 400 W (200 W × 2)
Continuous power output ... 60 W × 2 (at 14.4 V, 4 Ω, 20 Hz to 20 kHz, ≦ 1.0 % THD +N)
185 W × 1 (at 14.4 V, 4 Ω BRIDGE 1 kHz, ≦ 1.0 % THD +N)
85 W × 2 (at 14.4 V, 2 Ω, 1 kHz, ≦ 1.0 % THD+N)
Load impedance ..... 4 Ω (2 Ω to 8 Ω allowable)
Frequency response ..... 10 Hz to 70 kHz (+0 dB,–3 dB)
Signal-to-noise ratio ..... 98 dB (IEC-A network)
Distortion ..... 0.05 % (10 W, 1 kHz)
Low pass filter:
Cut off frequency ..... 80 Hz
Cut off slope ..... –12 dB/oct
Gain control:
RCA ..... 200 mV to 6.5 V
Speaker ..... 0.8 V to 26 V
Maximum input level / impedance:
RCA ..... 6.5 V / 22 kΩ
Speaker ..... 26 V / 22 kΩ

Notes

- Specifications and the design are subject to modifications without notice.
- The average current drawn is nearly the maximum current drawn by this unit when an audio signal is input. Use this value when working out total current drawn by multiple power amplifiers.

3. BASIC ITEMS FOR SERVICE

3.1 CHECK POINTS AFTER SERVICING

To keep the product quality after servicing, please confirm following check points.

No.		Procedures	Item to be confirmed
1		Confirm whether the customer complain has been solved.	The customer complain must not be reappeared. Audio and operations must be normal.
2		Check the output sound.	Audio and operations must be normal.
3		Appearance check	No scratches or dirt on its appearance after receiving it for service.

See the table below for the items to be checked regarding audio:

Item to be checked regarding audio
Distortion
Noise
Volume too low
Volume too high
Volume fluctuating
Sound interrupted

3.2 JIGS LIST

● Lubricants and Glues List

Name	Grease No.	Remarks
Grease	GEM1057	Applying to Heatsink
Bond	GYL1006	Applying to choke coil, resistor and capacitor

4. BLOCK DIAGRAM

There is no information to be shown in this chapter.

5. DIAGNOSIS

5.1 CONNECTOR FUNCTION DESCRIPTION

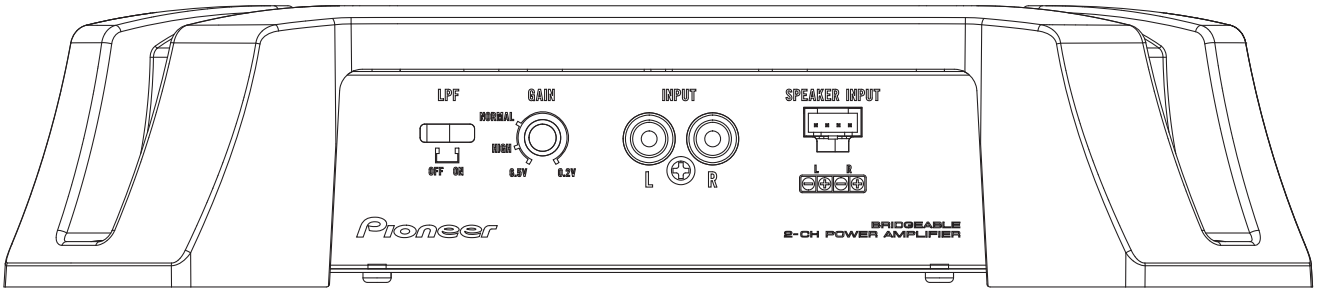

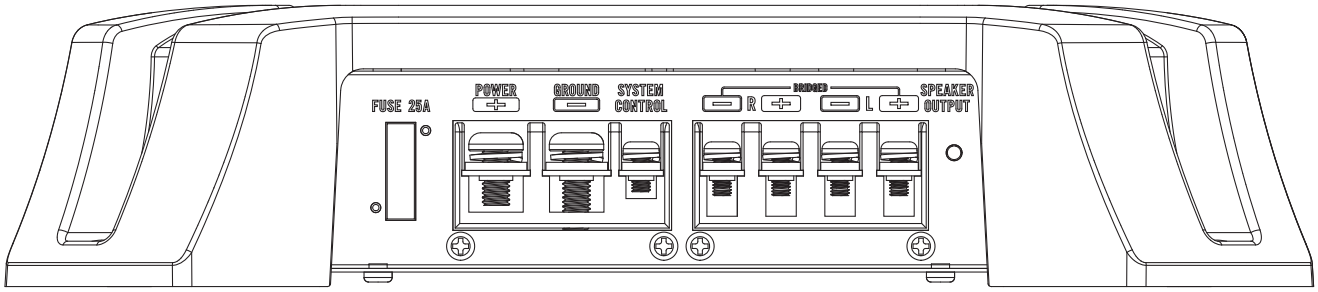

6. SERVICE MODE

There is no information to be shown in this chapter.

7. DISASSEMBLY

While the photograph shown is slightly different from this model in shape, the disassembly procedure is the same.

● Removing the Case (Fig.1)

1. Remove the four screws.
2. Remove the four screws and then remove the Case.

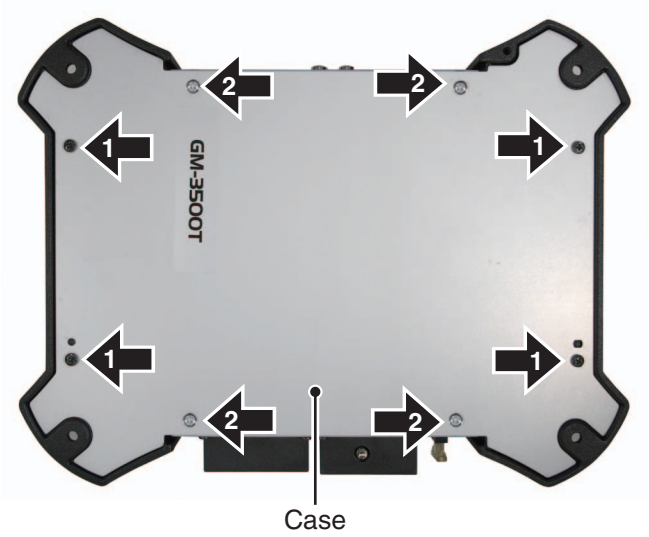

Fig.1

● Removing the PCB Kit (Fig.2)

1. Remove the ten screws.
2. Remove the six screws.
3. Remove the four screws and then remove the PCB Kit.

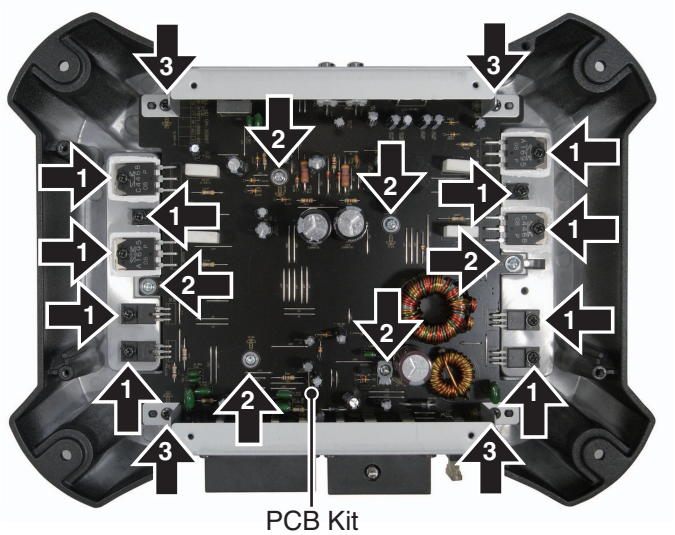

Fig.2

● How to assemble the PCB Kit

1. Four screws.
2. Six screws.
3. Ten screws.

GYL1006

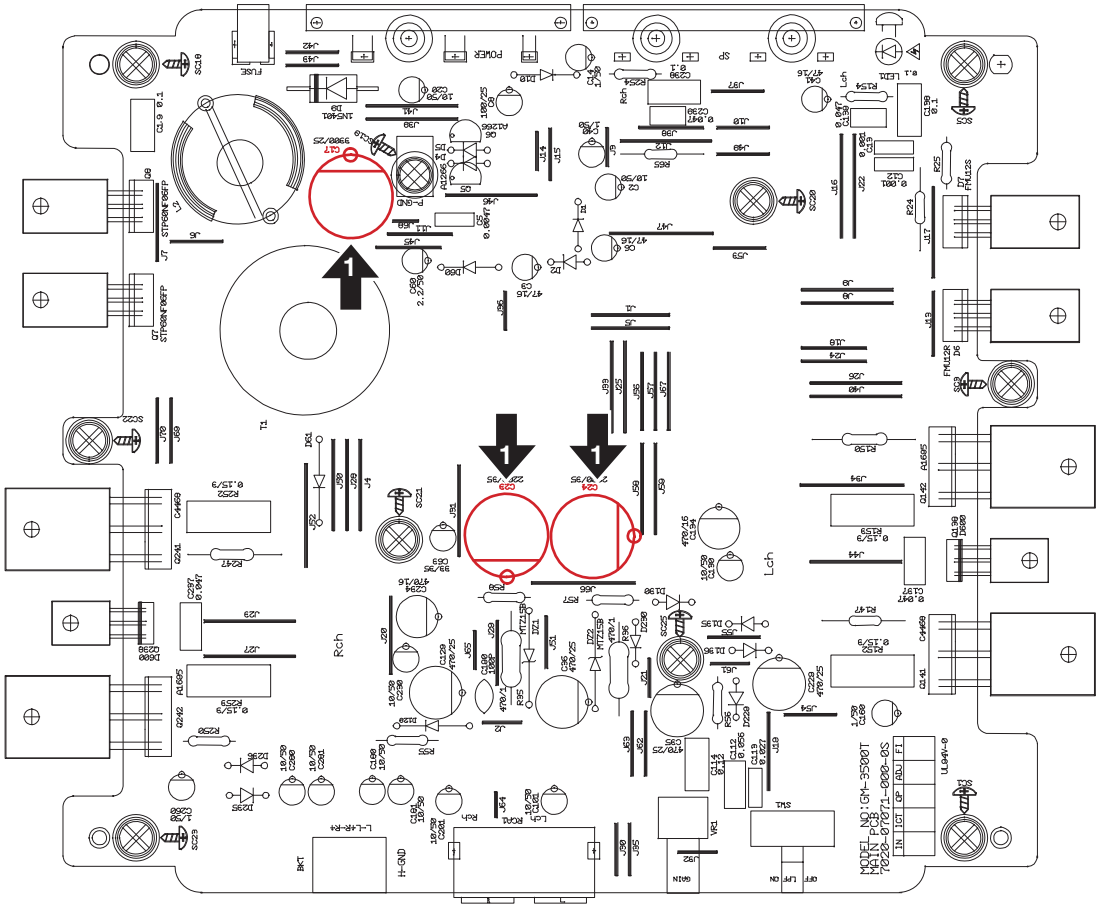

8. EACH SETTING AND ADJUSTMENT

There is no information to be shown in this chapter.

9. EXPLODED VIEWS AND PARTS LIST

NOTES : • *Parts marked by " * " are generally unavailable because they are not in our Master Spare Parts List.*
• *The ⚠ mark found on some component parts indicates the importance of the safety factor of the part. Therefore, when replacing, be sure to use parts of identical designation.*
• *Screw adjacent to ▽ mark on the product are used for disassembly.*
• *For the applying amount of lubricants or glue, follow the instructions in this manual. (In the case of no amount instructions,apply as you think it appropriate.)*

9.1 PACKING

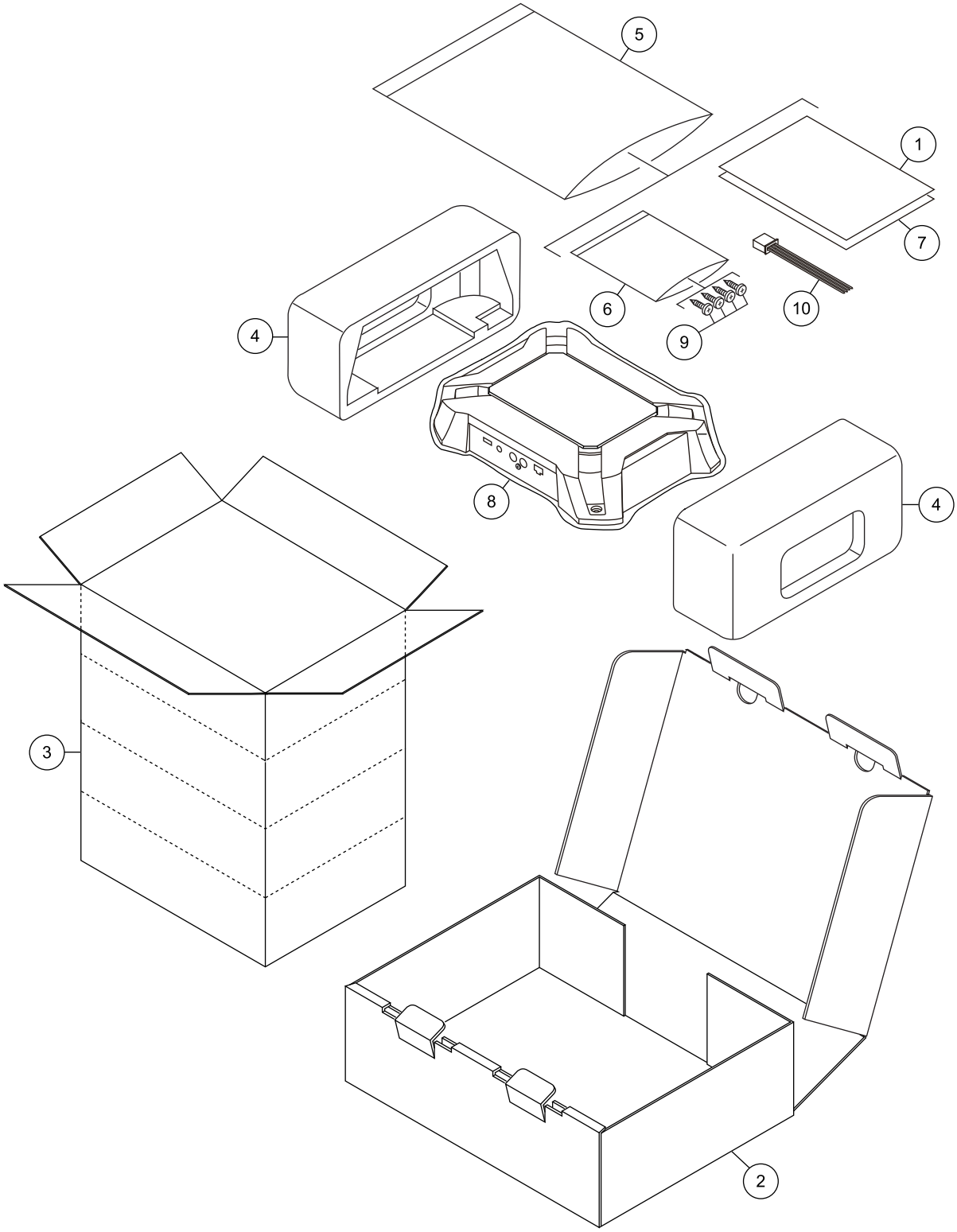

(1) PACKING SECTION PARTS LIST

Mark	No.	Description	Part No.
*	1	Warranty Card	See Contrast table (2)
*	2	Unit Box	See Contrast table (2)
*	3	Contain Box	See Contrast table (2)
*	4	Protector	6230212974000-IL
*	5	Polyethylene Bag	6337210282000-IL
*	6	Polyethylene Bag	6337210499000-IL
	7	Owner's Manual	See Contrast table (2)
*	8	Packing Cover	6337210489000-IL
	9	Screw	B010440183B10-IL
	10	MBL CMPX CONN CORD	L008101040030-IL

(2) CONTRAST TABLE

GM-3500T/XZUC, GM-3500T/XZEW5 and GM-3500T/XZES are constructed the same except for the following:

Mark	No.	Description	GM-3500T/XZUC	GM-3500T/XZEW5	GM-3500T/XZES
*	1	Warranty Card	5727000000271-IL	5727000000280-IL	Not used
*	2	Unit Box	6007211880000-IL	6007211880020-IL	6007211880010-IL
*	3	Contain Box	6027210800000-IL	6027210800020-IL	6027210800010-IL
	7	Owner's Manual	5707000005530-IL	5707000005550-IL	5707000005540-IL

Owner's Manual,Installation Manual

Part No.	Language
5707000005530-IL	English, French, Spanish(Espanol)
5707000005550-IL	English, French, Italian, Spanish(Espanol), German, Dutch, Russian
5707000005540-IL	English, Ptbr, Spanish(Espanol), Arabic

9.2 EXTERIOR

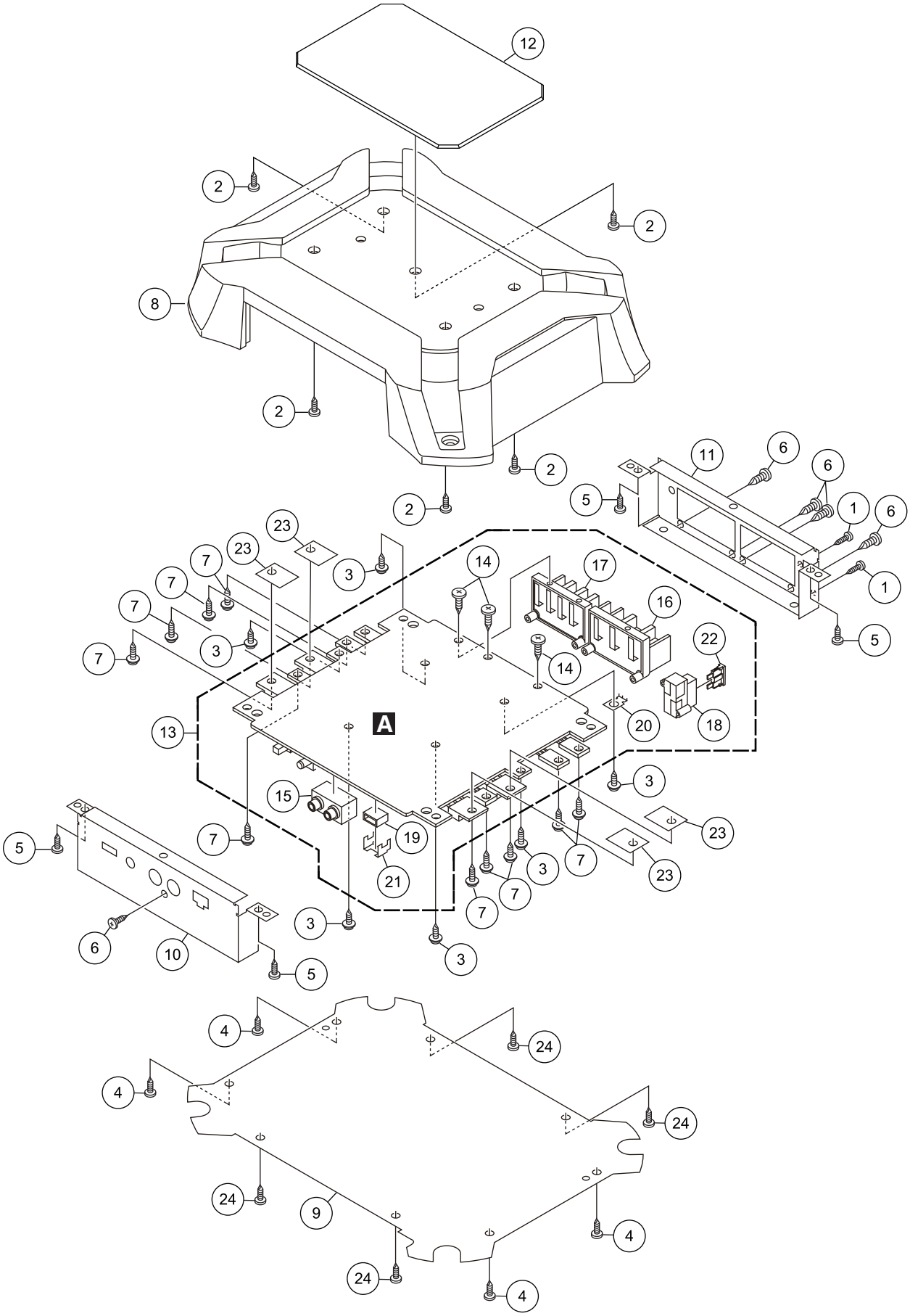
12
2
2
8
2
2
2
11
6
6
5
1
6
1
5
23
23
7
7
7
7
3
3
14
17
16
22
14
A
20
18
13
3
15
23
19
7
5
3
7
23
21
7
7
3
6
10
3
5
4
24
4
24
24
9
4
24
4

EXTERIOR SECTION PARTS LIST

Mark	No.	Description	Part No.
	1	Screw	B020020063P10-IL
	2	Screw	B020026081B10-IL
	3	Screw	B020030081W10-IL
	4	SCREW,TAP TITE	B020030083B10-IL
	5	SCREW,TAP TITE	B020030083B10-IL
	6	Screw	B020030103B10-IL
	7	Screw	B020030123W10-IL
	8	Heat Sink	2127211978000-IL
	9	Case	3200213876000-IL
	10	Panel	3207213846000-IL
	11	Panel	3207213856000-IL
	12	Plate	4317215391000-IL
	13	PCB Kit	7025CA1001010-IL
	14	Screw	B020030101B10-IL
	15	RCA Jack	G601206B0500Y-IL
	16	BATT Terminal	G61801JXZ3X10-IL
	17	Screw SP Terminal	G61801JXZ4X10-IL
	18	Fuse Holder	G640000200010-IL
	19	Board in Connector	L102250040020-IL
	20	Terminal	3790040886000-IL
	21	Holder	4010215146000-IL
⚠	22	Fuse(25 A)	CEK1329
	23	Insulator	See the following note
	24	Screw	B020930061B10-IL

NOTE) These insulators are supplied with Power Transistors. Please order Power Transistors.

10. SCHEMATIC DIAGRAM

10.1 PCB KIT (GUIDE PAGE)

Note: When ordering service parts, be sure to refer to " EXPLODED VIEWS AND PARTS LIST" or "ELECTRICAL PARTS LIST".

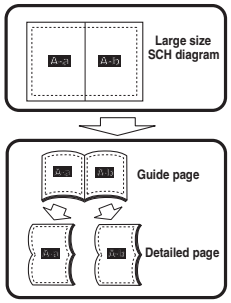

A-a

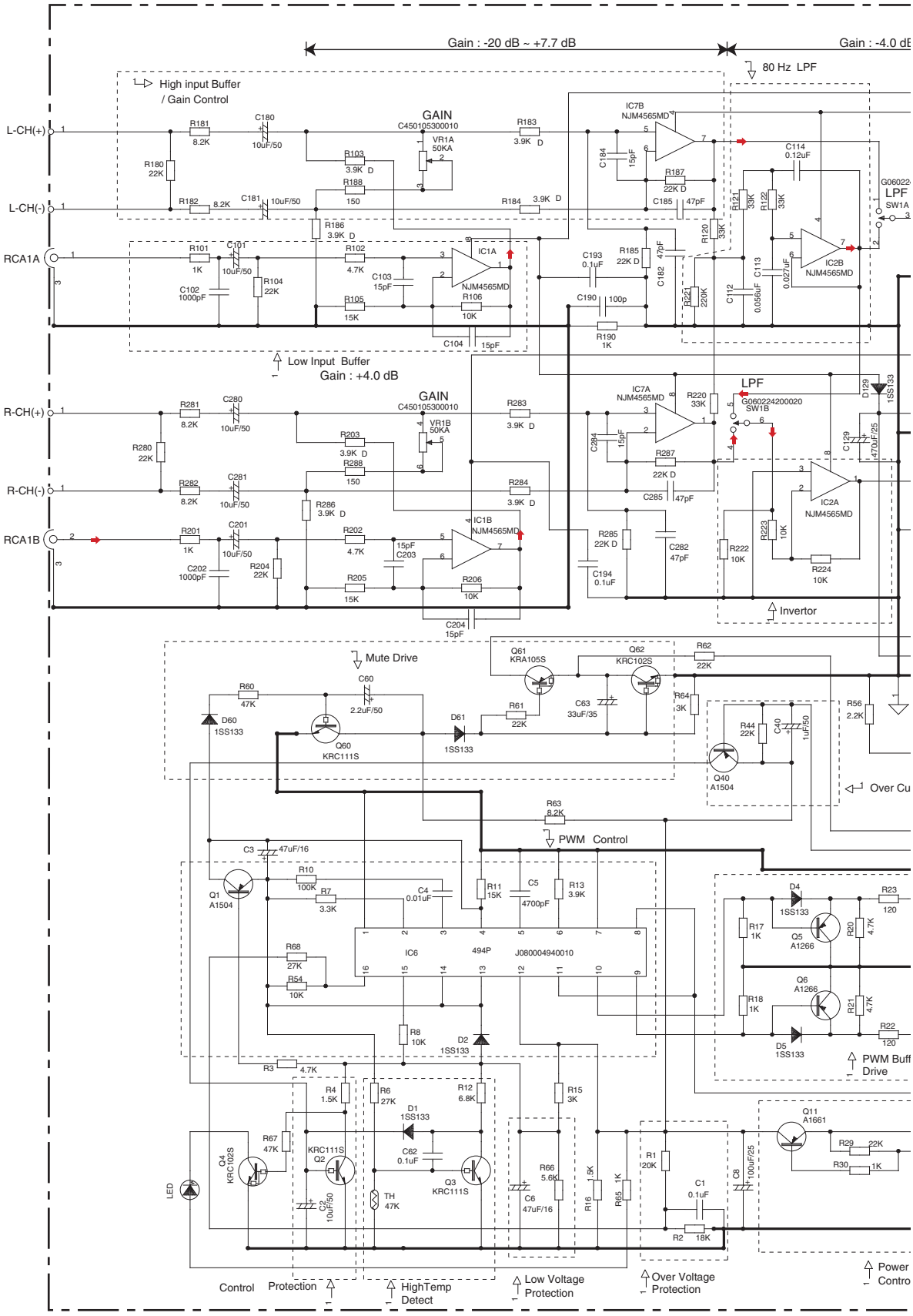

A

A-b

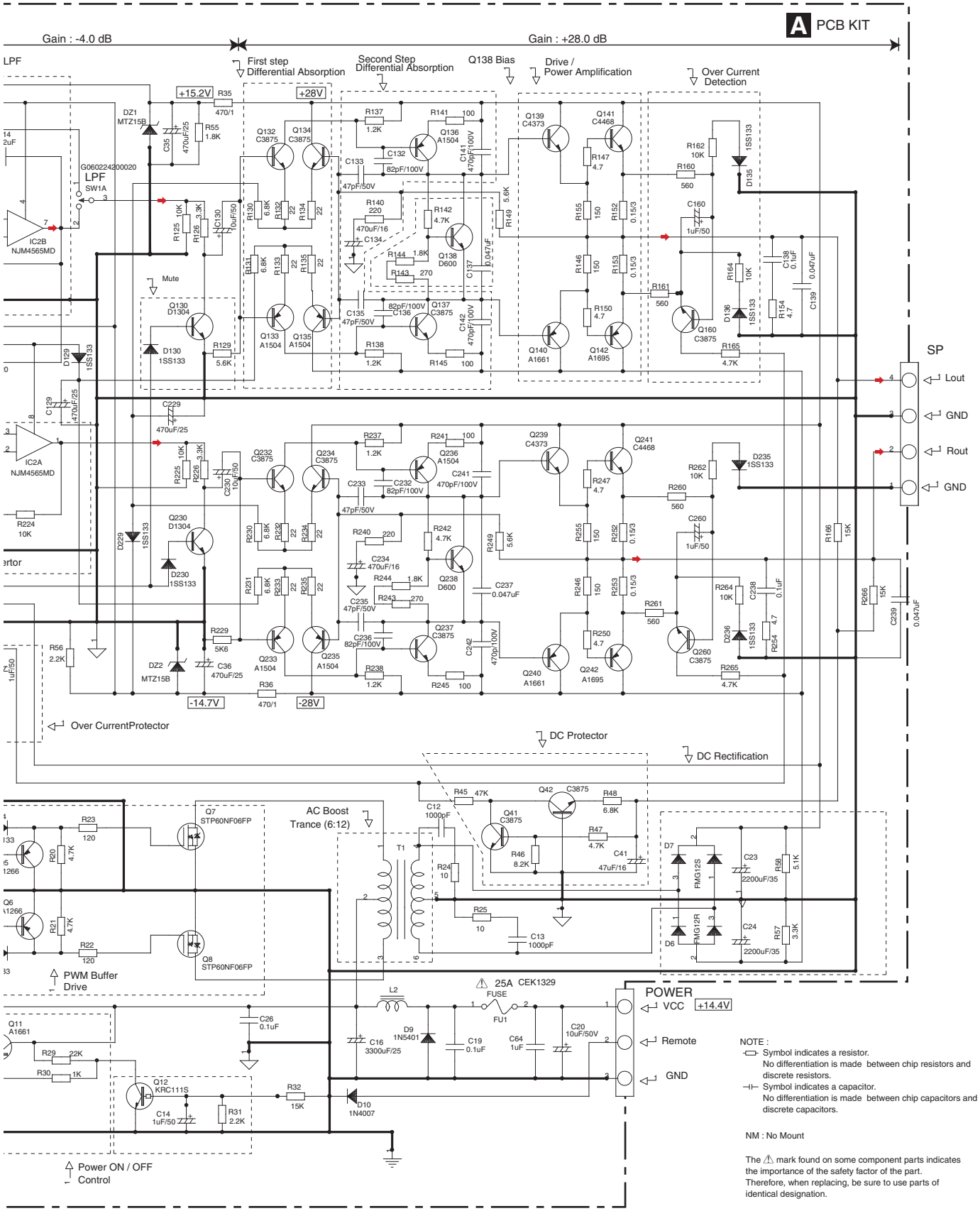

NOTE :

- Symbol indicates a resistor. No differentiation is made between chip resistors and discrete resistors.
- Symbol indicates a capacitor. No differentiation is made between chip capacitors and discrete capacitors.

NM : No Mount

The ⚠ mark found on some component parts indicates the importance of the safety factor of the part. Therefore, when replacing, be sure to use parts of identical designation.

A-b

A-a A-b

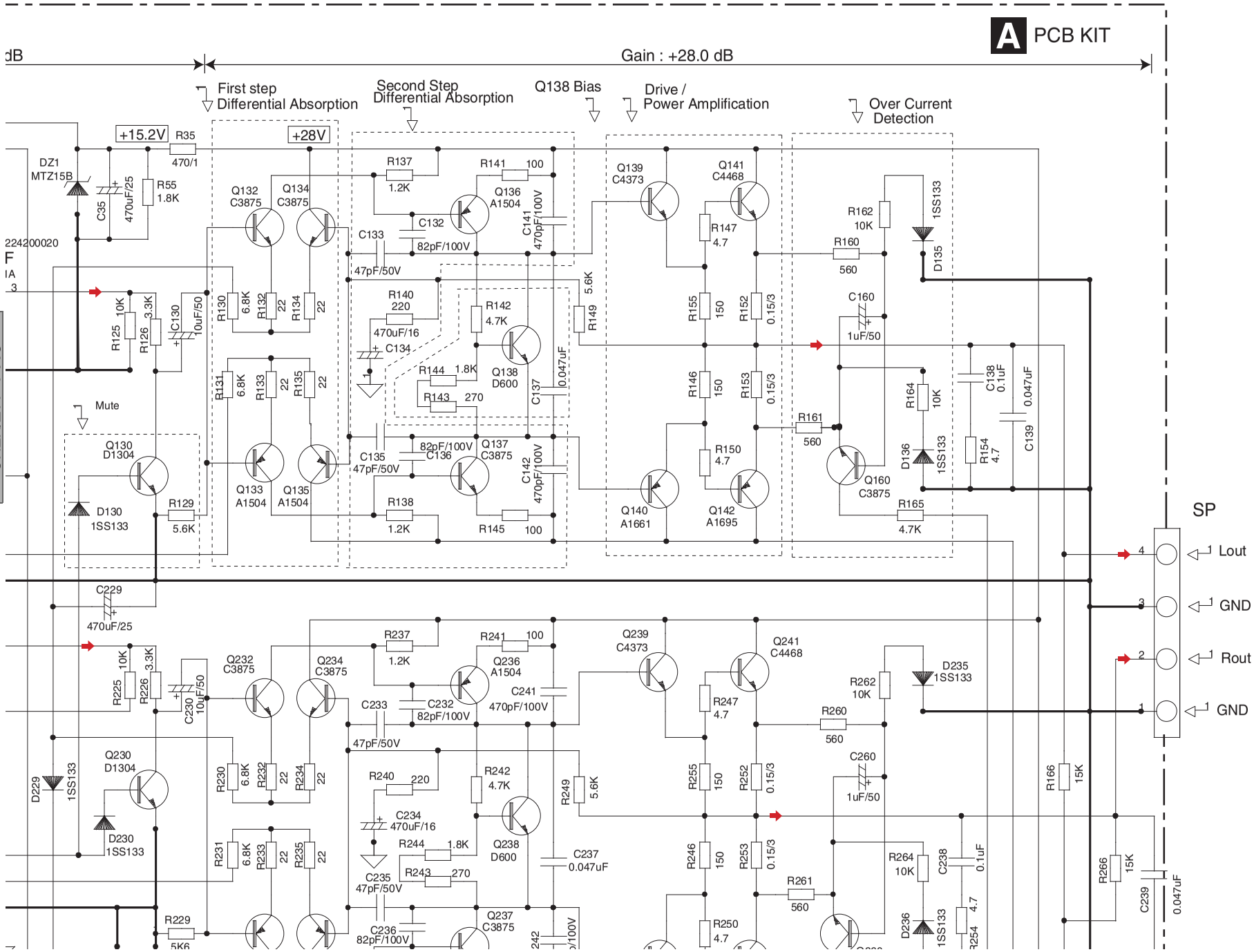
A PCB KIT
Gain : +28.0 dB
First step Differential Absorption
Second Step Differential Absorption
Q138 Bias
Drive / Power Amplification
Over Current Detection
+15.2V
+28V
Mute
SP
Lout
GND
Rout
GND
DZ1 MTZ15B
Q132 C3875
Q134 C3875
Q133 A1504
Q135 A1504
Q130 D1304
D130 1SS133
Q136 A1504
Q137 C3875
Q138 D600
Q139 C4373
Q140 A1661
Q141 C4468
Q142 A1695
Q160 C3875
D135 1SS133
D136 1SS133
Q230 D1304
D230 1SS133
D229 1SS133
Q232 C3875
Q234 C3875
Q236 A1504
Q237 C3875
Q238 D600
Q239 C4373
Q241 C4468
D235 1SS133
D236 1SS133

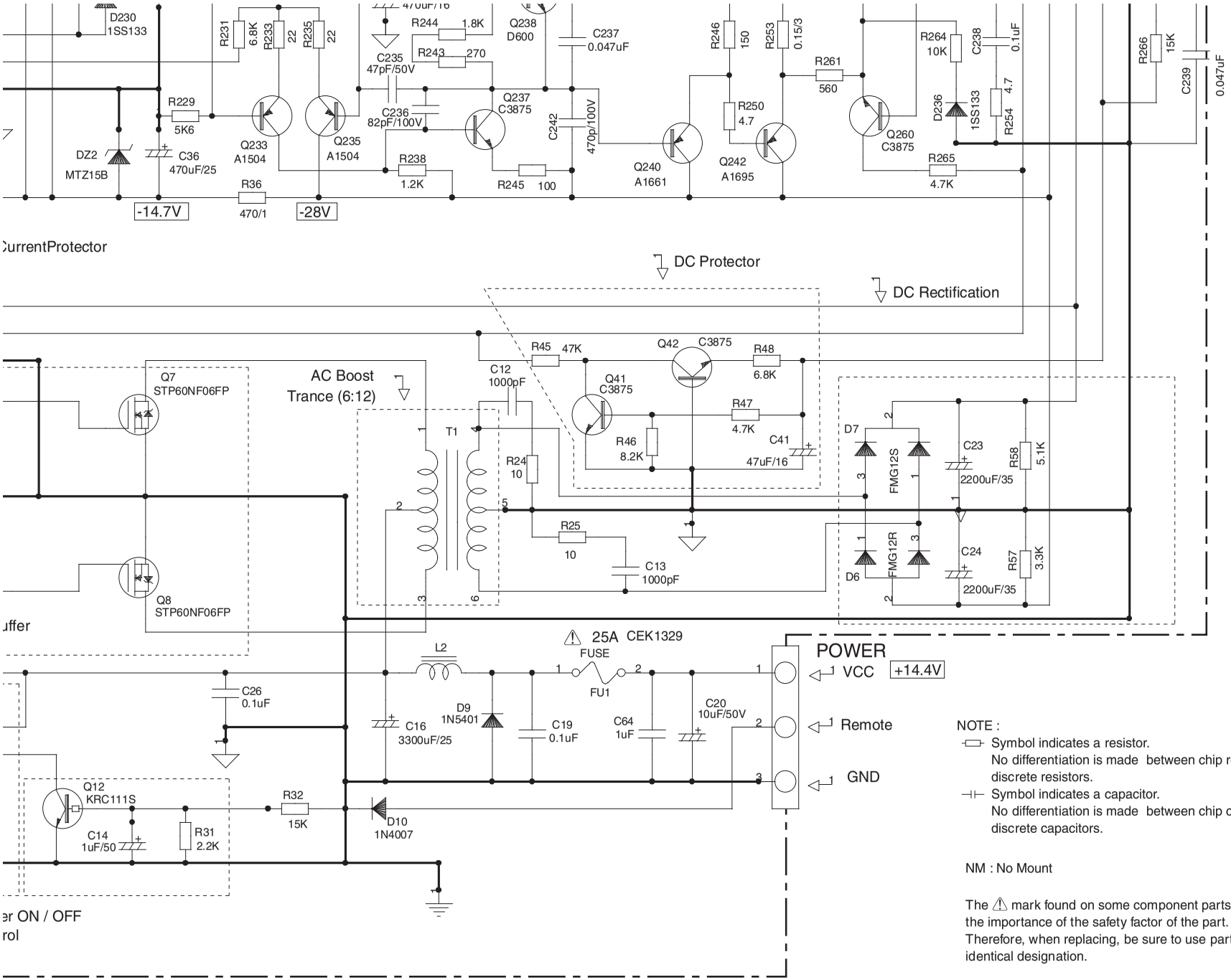

NOTE :

- Symbol indicates a resistor.
  No differentiation is made between chip resistors and discrete resistors.
- Symbol indicates a capacitor.
  No differentiation is made between chip capacitors and discrete capacitors.

NM : No Mount

The ⚠ mark found on some component parts indicates the importance of the safety factor of the part. Therefore, when replacing, be sure to use parts of identical designation.

A-a A-b

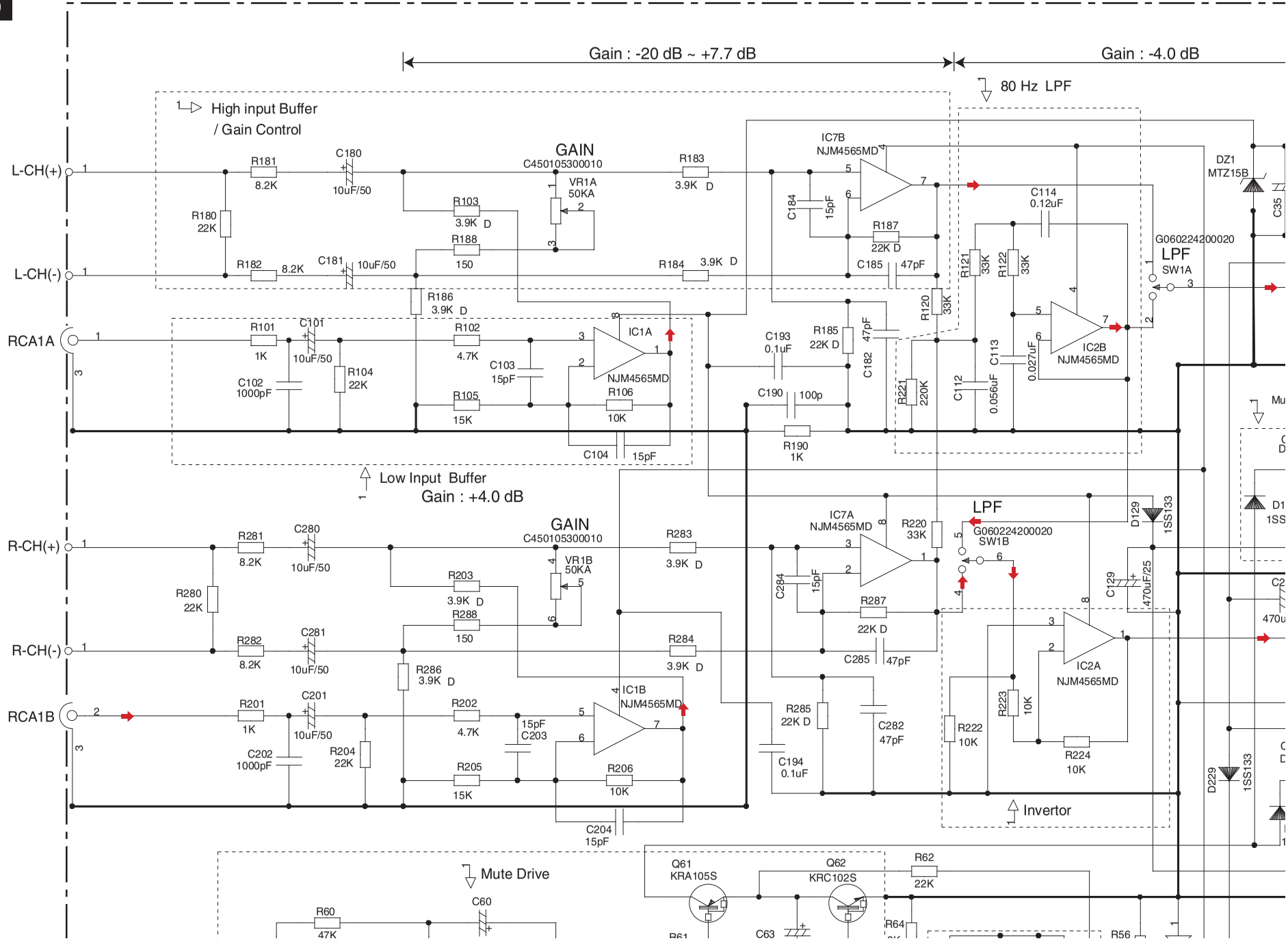
A-b
Gain : -20 dB ~ +7.7 dB
Gain : -4.0 dB
80 Hz LPF
High input Buffer
/ Gain Control
L-CH(+)
L-CH(-)
RCA1A
R-CH(+)
R-CH(-)
RCA1B
GAIN
C450105300010
VR1A
50KA
VR1B
50KA
IC7B
NJM4565MD
IC7A
NJM4565MD
IC1A
NJM4565MD
IC1B
NJM4565MD
IC2B
NJM4565MD
IC2A
NJM4565MD
LPF
G060224200020
SW1A
SW1B
DZ1
MTZ15B
D129
1SS133
D229
1SS133
Low Input Buffer
Gain : +4.0 dB
Invertor
Mute Drive
Q61
KRA105S
Q62
KRC102S
R62
22K
C60
R60
47K
C63
R64
R56

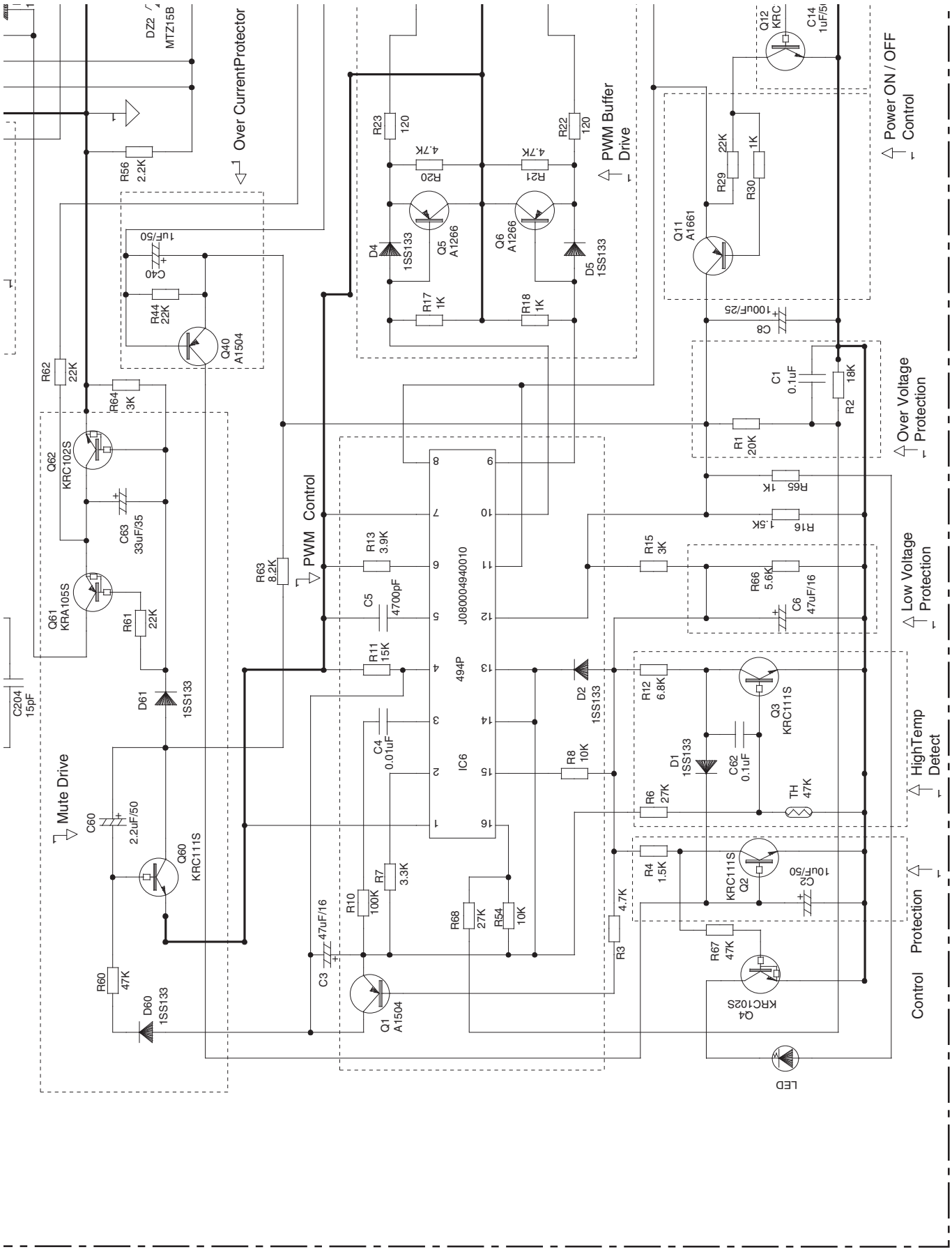
Over CurrentProtector
PWM Buffer Drive
Power ON / OFF Control
Over Voltage Protection
Low Voltage Protection
HighTemp Detect
Protection Control
PWM Control
Mute Drive
J08000494001O
494P
IC6
DZ2 MTZ15B
R56 2.2K
C40 1uF/50
R44 22K
Q40 A1504
R62 22K
R64 3K
Q62 KRC102S
C63 33uF/35
Q61 KRA105S
R61 22K
C204 15pF
D61 1SS133
C60 2.2uF/50
Q60 KRC111S
R60 47K
D60 1SS133
R63 8.2K
R23 120
R20 4.7K
Q5 A1266
D4 1SS133
R17 1K
R22 120
R21 4.7K
Q6 A1266
D5 1SS133
R18 1K
Q12 KRC
C14 1uF/5
R29 22K
R30 1K
Q11 A1661
C8 100uF/25
C1 0.1uF
R2 18K
R1 20K
R65 1K
R16 1.5K
R15 3K
R66 5.6K
C6 47uF/16
R13 3.9K
C5 4700pF
R11 15K
C4 0.01uF
R10 100K
R7 3.3K
R68 27K
R54 10K
C3 47uF/16
Q1 A1504
D2 1SS133
R8 10K
R12 6.8K
Q3 KRC111S
D1 1SS133
C62 0.1uF
R6 27K
TH 47K
R4 1.5K
KRC111S Q2
C2 10uF/50
R3 4.7K
R67 47K
Q4 KRC102S
LED

A-b

A-a

11. PCB CONNECTION DIAGRAM
11.1 PCB KIT

NOTE FOR PCB DIAGRAMS

1. The parts mounted on this PCB include all necessary parts for several destination.
   For further information for respective destinations, be sure to check with the schematic diagram.
2. Viewpoint of PCB diagrams

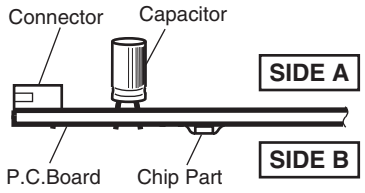

A PCB KIT

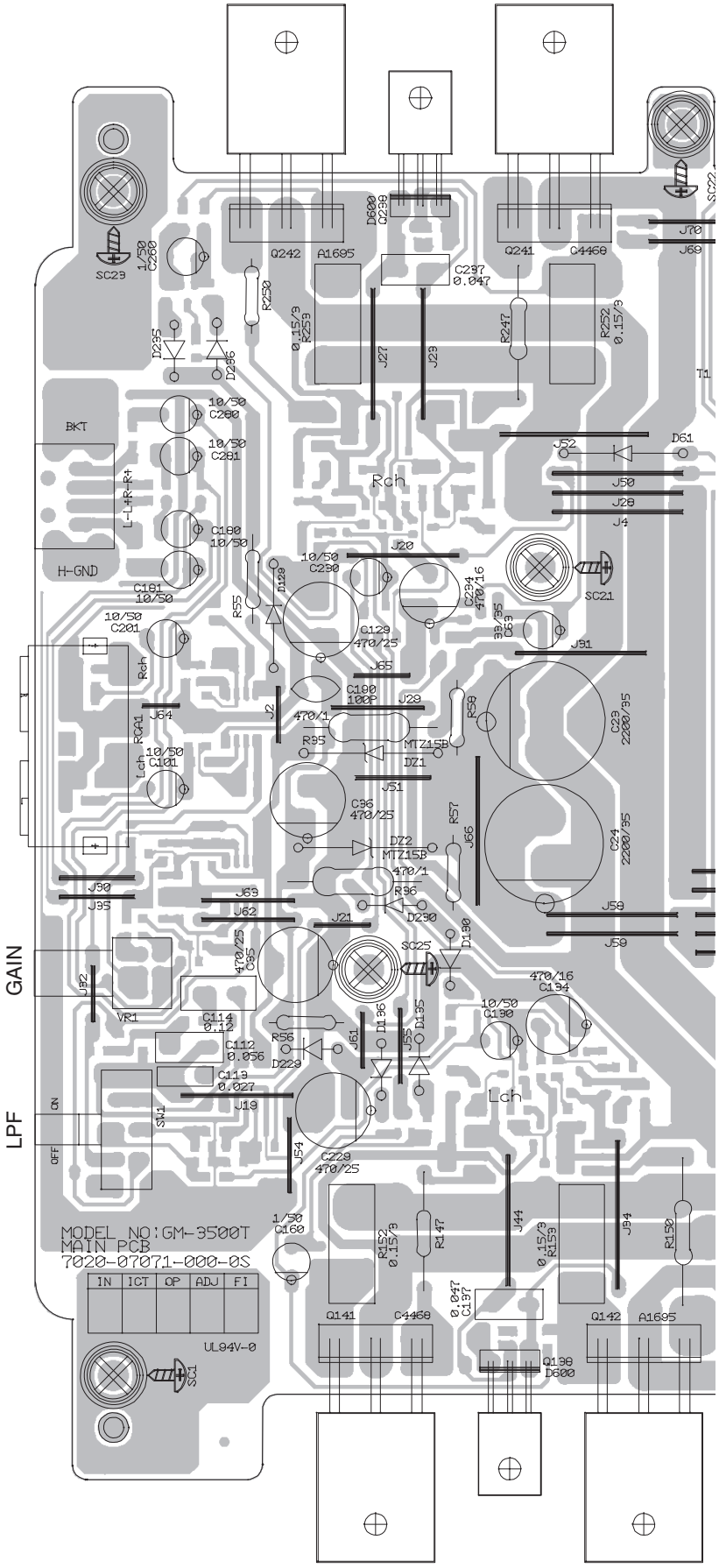

A

SIDE A

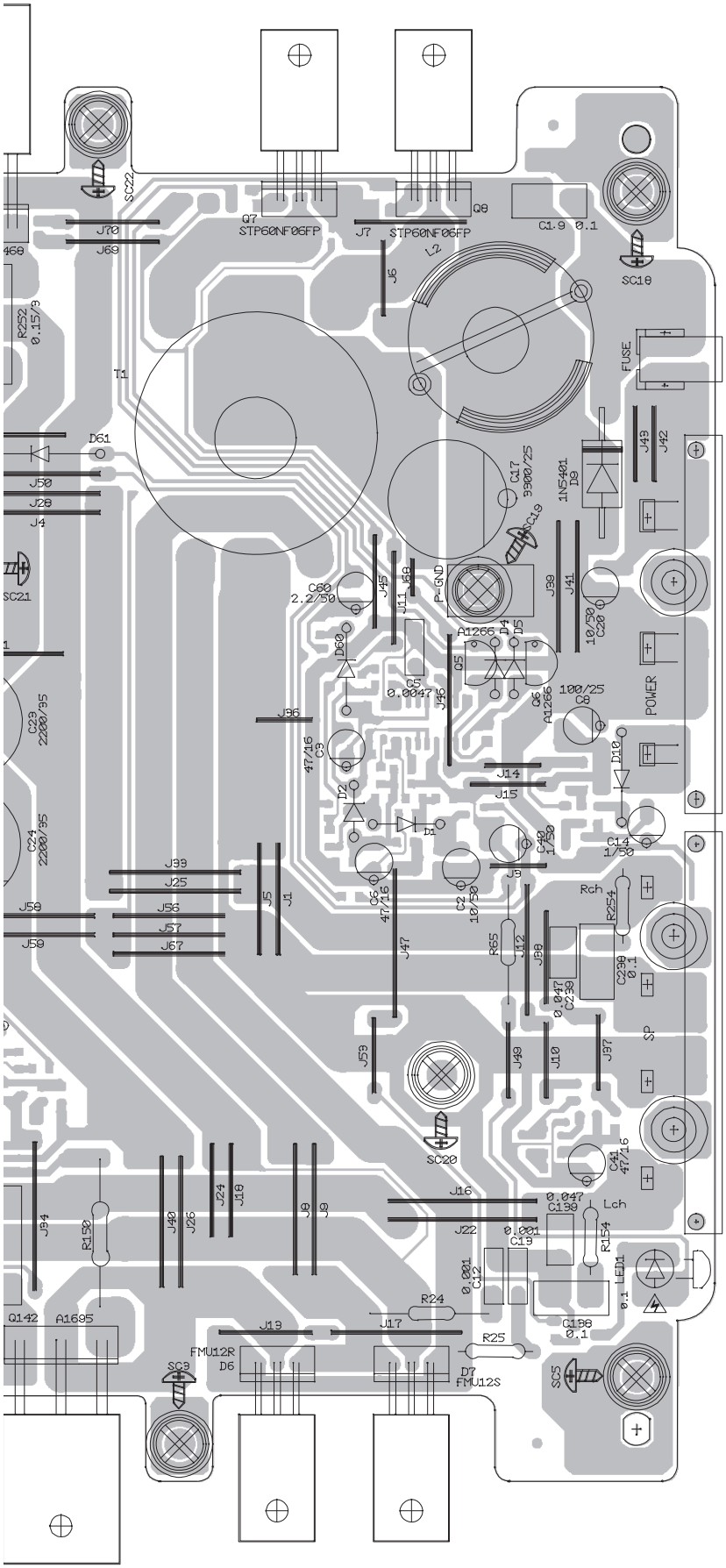
SC22
J70
J69
Q7
STP60NF06FP
J7
STP60NF06FP
Q8
C1.9 0.1
L2
J6
SC10
R252
0.15/3
T1
FUSE
D61
J50
J28
J4
J49
J42
C17
3900/25
1N5401
D9
SC19
J39
J41
P-GND
J45
J11
J68
C60
2.2/50
D60
A1266
Q4
D5
Q5
C5
0.0047
J46
Q6
A1266
100/25
C8
10/50
C20
POWER
SC21
C29
2200/35
J96
47/16
C3
D2
D1
J14
J15
D10
C14
1/50
C24
2200/35
J33
J25
J5
J1
C6
47/16
C2
10/50
J9
C40
1/50
Rch
R254
J59
J56
J57
J67
J47
R65
J12
J8
C239
0.047
C290
0.1
SP
J59
J49
J10
J97
SC20
C41
47/16
J16
0.047
C138
Lch
R154
J54
R150
J40
J26
J24
J18
J9
J9
J22
0.001
C13
0.001
C12
LED1
0.1
Q142
A1695
R24
J19
J17
C186
0.1
R25
FMU12R
D6
D7
FMU12S
SC3
SC5

A PCB KIT

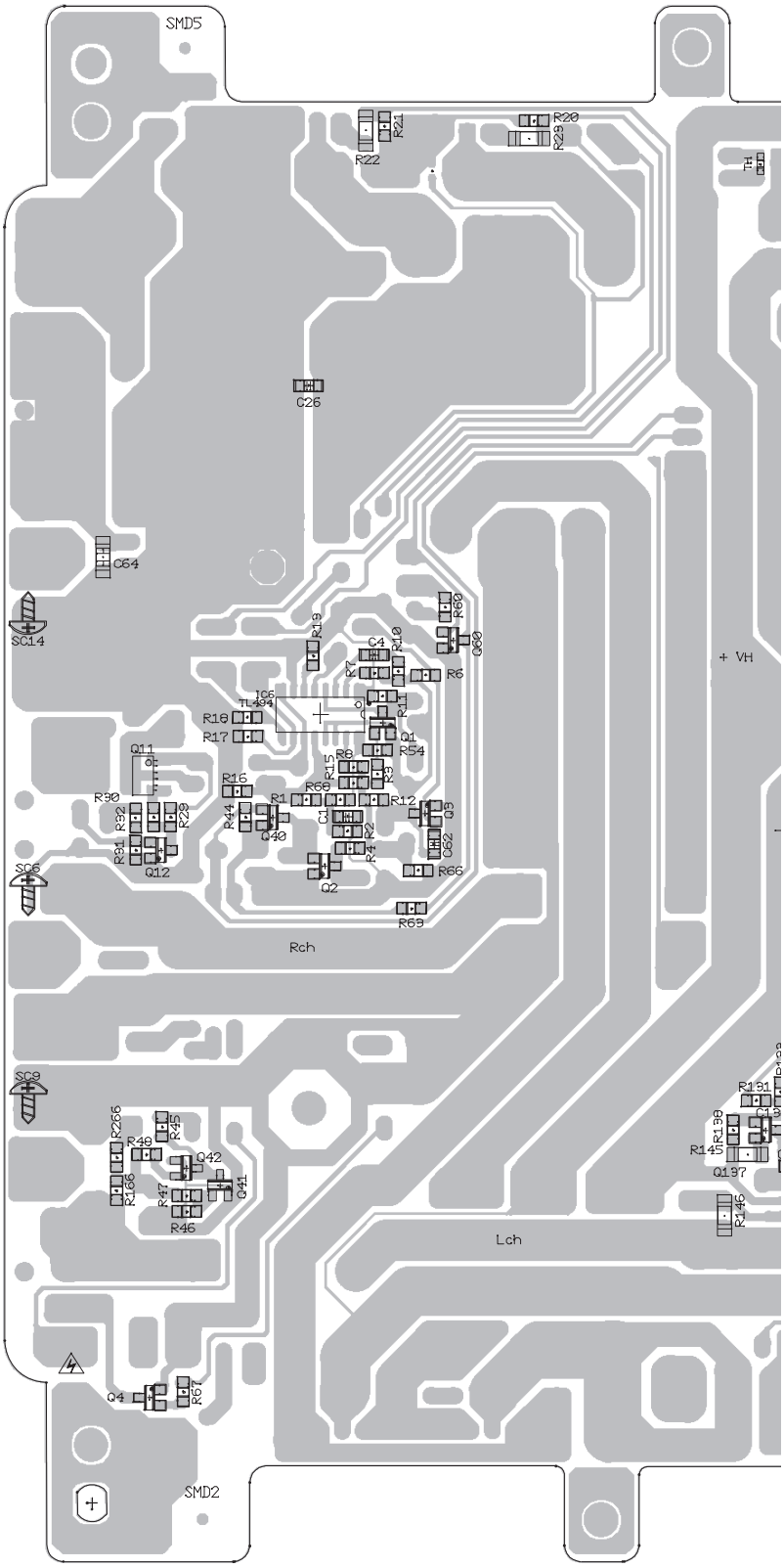
SMD5
R21
R22
R20
R29
TH
C26
C64
SC14
R19
C4
R10
R60
Q60
R7
R6
+ VH
IC6
TL494
R18
R17
R11
Q1
R54
Q11
R8
R15
R9
R16
R66
R12
R30
R32
R28
R44
R1
C1
Q3
R31
Q40
R2
R4
C62
Q12
SC6
Q2
R66
R69
Rch
SC9
R266
R45
R48
Q42
R166
R47
Q41
R46
R131
R130
R145
Q137
R146
Lch
Q4
R67
SMD2

SIDE B

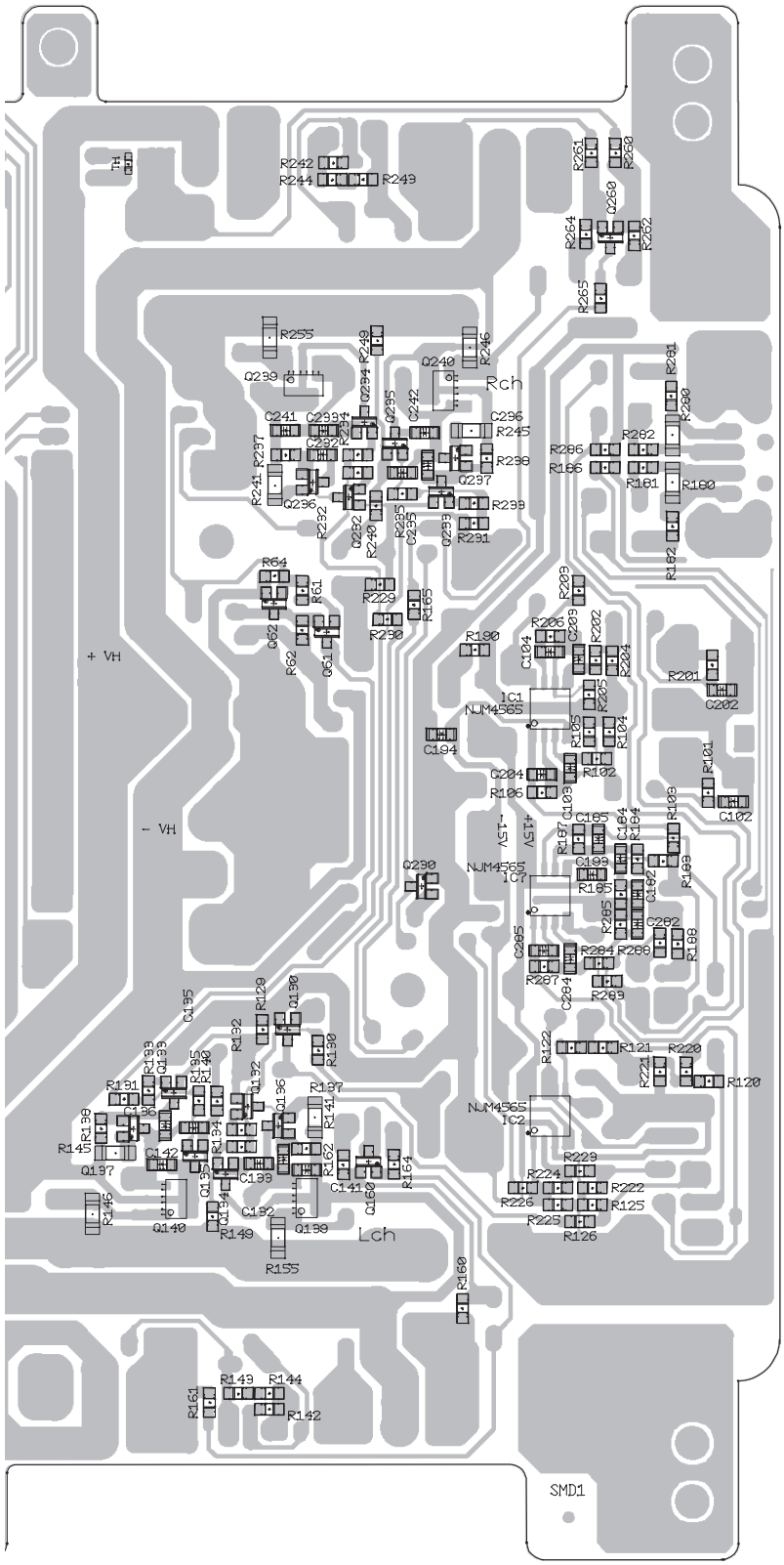
Rch
Lch
+ VH
- VH
IC1
NJM4565
IC2
NJM4565
IC7
NJM4565
+15V
-15V
SMD1

A

12. ELECTRICAL PARTS LIST

NOTE:

- *Parts whose parts numbers are omitted are subject to being not supplied.*
- *The part numbers shown below indicate chip components.*
  Chip Resistor
  RS1/◯S◯◯◯J,RS1/◯◯S◯◯◯J
  Chip Capacitor (except for CQS.....)
  CKS....., CCS....., CSZS.....
- *The ⚠ mark found on some component parts indicates the importance of the safety factor of the part. Therefore, when replacing, be sure to use parts of identical designation.*
- *Meaning of the figures and others in the parentheses in the parts list.*
  Example) IC 301 is on the point (face A, 91 of x-axis, and 111 of y-axis) of the corresponding PC board.
  IC 301 (A, 91, 111) IC NJM2068V

Unit Number : 7025CA1001010
Unit Name : PCB Kit

A

Unit Number : 7025CA1001010
Unit Name : PCB Kit

MISCELLANEOUS

Circuit Symbol and No.		Part No.
IC 1	IC	NJM4565MD
IC 2	IC	NJM4565MD
IC 6	IC	J080004940010-IL
IC 7	IC	NJM4565MD
Q 1	Transistor	J5201504Y0210-IL
Q 2	Transistor	J522011100210-IL
Q 3	Transistor	J522011100210-IL
Q 4	Transistor	J522010200210-IL
Q 5	Transistor	J5001266Y0050-IL
Q 6	Transistor	J5001266Y0050-IL
Q 7	Power MOS FET	J544600600020-IL
Q 8	Power MOS FET	J544600600020-IL
Q 11	Transistor	J5201661Y0210-IL
Q 12	Transistor	J522011100210-IL
Q 40	Transistor	J5201504Y0210-IL
Q 41	Transistor	J5223875Y0210-IL
Q 42	Transistor	J5223875Y0210-IL
Q 60	Transistor	J522011100210-IL
Q 61	Transistor	J520010500210-IL
Q 62	Transistor	J522010200210-IL
Q 130	Transistor	J5031304Y0050-IL
Q 132	Transistor	J5223875Y0210-IL
Q 133	Transistor	J5201504Y0210-IL
Q 134	Transistor	J5223875Y0210-IL
Q 135	Transistor	J5201504Y0210-IL
Q 136	Transistor	J5201504Y0210-IL
Q 137	Transistor	J5223875Y0210-IL
Q 138	Transistor	J503600150010-IL
Q 139	Transistor	J5224373Y0210-IL
Q 140	Transistor	J5201661Y0210-IL
Q 141	Transistor	J502446800010-IL
Q 142	Transistor	J500169500010-IL
Q 160	Transistor	J5223875Y0210-IL
Q 230	Transistor	J5031304Y0050-IL
Q 232	Transistor	J5223875Y0210-IL
Q 233	Transistor	J5201504Y0210-IL
Q 234	Transistor	J5223875Y0210-IL
Q 235	Transistor	J5201504Y0210-IL
Q 236	Transistor	J5201504Y0210-IL
Q 237	Transistor	J5223875Y0210-IL
Q 238	Transistor	J503600150010-IL
Q 239	Transistor	J5224373Y0210-IL
Q 240	Transistor	J5201661Y0210-IL
Q 241	Transistor	J502446800010-IL
Q 242	Transistor	J500169500010-IL
Q 260	Transistor	J5223875Y0210-IL
D 1	Diode	1SS133
D 2	Diode	1SS133
D 4	Diode	1SS133
D 5	Diode	1SS133
D 6	Diode	K041120001000-IL
D 7	Diode	K041120002000-IL
D 9	Diode	K040540100000-IL
D 10	Diode	K000400700010-IL
D 60	Diode	1SS133
D 61	Diode	1SS133
D 100	Diode	K06015R005520-IL
D 129	Diode	1SS133
D 130	Diode	1SS133
D 135	Diode	1SS133
D 136	Diode	1SS133
D 200	Diode	K06015R005520-IL
D 229	Diode	1SS133
D 230	Diode	1SS133
D 235	Diode	1SS133
D 236	Diode	1SS133
LED1	Blue LED	K500036000130-IL
L 2	Choke Coil 27 uH	D330270100010-IL
T 1	Transformer	8200290080030-IL
TH1	SMD Thermistor	F340184730010-IL

Circuit Symbol and No.		Part No.
SW1	Slide Switch(LPF)	G060224200020-IL
VR1	Rotary VR 50 kohm (GAIN)	C450105300010-IL
⚠ FU1	Fuse 25 A	CEK1329

RESISTORS

Circuit Symbol and No.	Part No.
R 1	RS1/8SQ203J
R 2	RS1/8SQ183J
R 3	RS1/8SQ472J
R 4	RS1/8SQ152J
R 6	RS1/8SQ273J
R 7	RS1/8SQ332J
R 8	RS1/8SQ103J
R 10	RS1/8SQ104J
R 11	RS1/8SQ153J
R 12	RS1/8SQ682J
R 13	RS1/8SQ392D
R 15	RS1/8SQ302J
R 16	RS1/8SQ152J
R 17	RS1/8SQ102J
R 18	RS1/8SQ102J
R 20	RS1/8SQ472J
R 21	RS1/8SQ472J
R 22	RS1/4SA121J
R 23	RS1/4SA121J
R 24	RD1/4PU100J
R 25	RD1/4PU100J
R 29	RS1/8SQ223J
R 30	RS1/8SQ102J
R 31	RS1/8SQ222J
R 32	RS1/8SQ153J
R 35	RS1PMF471J
R 36	RS1PMF471J
R 44	RS1/8SQ223J
R 45	RS1/8SQ473J
R 46	RS1/8SQ822J
R 47	RS1/8SQ472J
R 48	RS1/8SQ682J
R 54	RS1/8SQ103J
R 55	RD1/4PU182J
R 56	RD1/4PU222J
R 57	RS1PMF332J
R 58	RS1PMF512J
R 60	RS1/8SQ473J
R 61	RS1/8SQ223J
R 62	RS1/8SQ223J
R 63	RS1/8SQ822J
R 64	RS1/8SQ302J
R 65	RD1/4PU102J
R 66	RS1/8SQ562J
R 67	RS1/8SQ473J
R 68	RS1/8SQ273J
R 101	RS1/8SQ102J
R 102	RS1/8SQ472J
R 103	RS1/8SQ392D
R 104	RS1/8SQ223J
R 105	RS1/8SQ153J
R 106	RS1/8SQ103J
R 120	RS1/8SQ333J
R 121	RS1/8SQ333J
R 122	RS1/8SQ333J
R 125	RS1/8SQ103J
R 126	RS1/8SQ332J
R 129	RS1/8SQ562J
R 130	RS1/8SQ682J
R 131	RS1/8SQ682J
R 132	RS1/8SQ220J
R 133	RS1/8SQ220J
R 134	RS1/8SQ220J
R 135	RS1/8SQ220J
R 137	RS1/8SQ122J
R 138	RS1/8SQ122J
R 140	RS1/8SQ221J
R 141	RS1/4SA101J
R 142	RS1/8SQ472F
R 143	RS1/8SQ270F
R 144	RS1/8SQ182F
R 145	RS1/4SA101J
R 146	RS1/4SA151J
R 147	RD1/4PU4R7J
R 149	RS1/8SQ562J
R 150	RD1/4PU4R7J
R 152	C144R15067000-IL
R 153	C144R15067000-IL
R 154	RD1/4PU4R7J
R 155	RS1/4SA151J
R 160	RS1/8SQ560J
R 161	RS1/8SQ560J
R 162	RS1/8SQ103J
R 164	RS1/8SQ103J
R 165	RS1/8SQ472J
R 166	RS1/8SQ153J
R 180	RS1/4SA223J
R 181	RS1/8SQ822J
R 182	RS1/8SQ822J
R 183	RS1/8SQ392D
R 184	RS1/8SQ392D
R 185	RS1/8SQ223D
R 186	RS1/8SQ392D
R 187	RS1/8SQ223D
R 188	RS1/8SQ151J
R 190	RS1/8SQ102J
R 201	RS1/8SQ102J
R 202	RS1/8SQ472J
R 203	RS1/8SQ392D
R 204	RS1/8SQ223J
R 205	RS1/8SQ153J
R 206	RS1/8SQ103J
R 220	RS1/8SQ333J
R 221	RS1/8SQ224J
R 222	RS1/8SQ103J
R 223	RS1/8SQ103J
R 224	RS1/8SQ103J
R 225	RS1/8SQ103J
R 226	RS1/8SQ332J
R 229	RS1/8SQ562J
R 230	RS1/8SQ682J
R 231	RS1/8SQ682J
R 232	RS1/8SQ220J
R 233	RS1/8SQ220J
R 234	RS1/8SQ220J

Circuit Symbol and No.		Part No.
R 235		RS1/8SQ220J
R 237		RS1/8SQ122J
R 238		RS1/8SQ122J
R 240		RS1/8SQ221J
R 241		RS1/4SA101J
R 242		RS1/8SQ472F
R 243		RS1/8SQ270F
R 244		RS1/8SQ182F
R 245		RS1/4SA101J
R 246		RS1/4SA151J
R 247		RD1/4PU4R7J
R 249		RS1/8SQ562J
R 250		RD1/4PU4R7J
R 252		C144R15067000-IL
R 253		C144R15067000-IL
R 254		RD1/4PU4R7J
R 255		RS1/4SA151J
R 260		RS1/8SQ560J
R 261		RS1/8SQ560J
R 262		RS1/8SQ103J
R 264		RS1/8SQ103J
R 265		RS1/8SQ472J
R 266		RS1/8SQ153J
R 280		RS1/4SA223J
R 281		RS1/8SQ822J
R 282		RS1/8SQ822J
R 283		RS1/8SQ392D
R 284		RS1/8SQ392D
R 285		RS1/8SQ223D
R 286		RS1/8SQ392D
R 287		RS1/8SQ223D
R 288		RS1/8SQ151J

CAPACITORS

Circuit Symbol and No.		Part No.
C 1		CKSQYB104K50
C 2		CEAT100M50
C 3		CEAT470M16
C 4		CCSQCH103J50
C 5		D02047206C060-IL
C 6		CEAT470M16
C 8		CEAT101M25
C 12		D02010206C060-IL
C 13		D02010206C060-IL
C 14		CEAT1R0M50
C 17		D041332084050-IL
C 19		D02010406C060-IL
C 20		CEAT100M50
C 23		D040222085020-IL
C 24		D040222085020-IL
C 26		CKSQYB104K50
C 35		CEAT471M25
C 36		CEAT471M25
C 40		CEAT1R0M50
C 41		CEAT470M16
C 60		CEAT2R2M50
C 62		CKSQYB104K50
C 63		CEAT330M35
C 64	1 uF	CCG1255
C 101		CEAT100M50

Circuit Symbol and No.	Part No.
C 102	CCSQCH102J50
C 103	CCSQCH150J50
C 104	CCSQCH150J50
C 112	D02056306C060-IL
C 113	D02027306C060-IL
C 114	D020124078060-IL
C 129	CEAT471M25
C 130	CEAT100M50
C 132	D01182077C201-IL
C 133	CCSQCH470J50
C 134	CEAT471M16
C 135	CCSQCH470J50
C 136	D01182077C201-IL
C 137	D02047306C060-IL
C 138	D02010406C060-IL
C 139	D02010306C060-IL
C 141	D01147177C201-IL
C 142	D01147177C201-IL
C 160	CEAT1R0M50
C 180	CEAT100M50
C 181	CEAT100M50
C 182	CCSQCH470J50
C 184	CCSQCH150J50
C 185	CCSQCH470J50
C 190	D000471067051-IL
C 193	CKSQYB104K50
C 194	CKSQYB104K50
C 201	CEAT100M50
C 202	CCSQCH102J50
C 203	CCSQCH150J50
C 204	CCSQCH150J50
C 229	CEAT471M25
C 230	CEAT100M50
C 232	D01182077C201-IL
C 233	CCSQCH470J50
C 234	CEAT471M16
C 235	CCSQCH470J50
C 236	D01182077C201-IL
C 237	D02047306C060-IL
C 238	D02010406C060-IL
C 239	D02010306C060-IL
C 241	D01147177C201-IL
C 242	D01147177C201-IL
C 260	CEAT1R0M50
C 280	CEAT100M50
C 281	CEAT100M50
C 282	CCSQCH470J50
C 284	CCSQCH150J50
C 285	CCSQCH470J50