Applicable Country & Regions: Globe

Service Manual for BenQ:

GL950A: D-SUB

P/N: 9H.L6RLA.T8X

GL950AM: D-SUB + AUDIO

P/N: 9H.L6SLA.T8X

G950A: D-SUB

P/N: 9H.L6TLA.T8X

G950AM: D-SUB + AUDIO

P/N: 9H.L7DLA.T8X

Glossy Black Chassis Colors

Product Service Manual – Level 1~2

Version: 1st
Date:07-04-2011

Notice:
For RO to input specific "Legal Requirement" in specific NS regarding to responsibility and liability statements.
Please check BenQ's eSupport web site, http://esupport.benq.com, to ensure that you have the most recent version of this manual.

First Edition (Jul. 2011)
© Copyright BenQ Corporation 2011. All Right Reserved.

Content Index

Abbreviations & Acronyms **3**

1. About this Manual **5**

1.1 Important 5

1.2 Trademark 5

2. Introduction **6**

2.1 RoHS (2002/95/EC) Requirements – Applied to all countries require RoHS. 6

2.2 Safety Warning and Notice 6

2.3 Compliance Statement 7

3. General Description **8**

4. Related service information **8**

5. Product Overview **9**

5.1 Monitor Specifications 9

5.2 Panel Inspection Specification 17

Level 1 Cosmetic / Appearance / Alignment Service **23**

Visual Inspection & Cleaning 23

F/W Upgrade SOP 23

Adjustment / Alignment Procedure **32**

Level 2 Circuit Board and Standard Parts Replacement **46**

Product Exploded View 46

Six Angles' View 48

Product Disassembly/Assembly 49

Block Diagram 60

Schematic Diagram 63

Troubleshooting 75

PCB LAYOUT **81**

Appendix 1 – Screw List / Torque **90**

Abbreviations & Acronyms

A	
ADC	Analog to Digital Converter
AFC	Automatic Frequency Control: control signal used to tune to the correct frequency
B	
BenQ	BenQ Corporation
BTSC	Broadcast Television System Committee
C	
CPU	Central Process Unit
CVBS	Composite Video Blanking and Synchronization
D	
DLP	Digital Light Processing / Texas Instruments®
DMD	Digital Micro mirror Device
DRAM	Dynamic RAM
DVI	Digital Visual Interface
DVI-D	Digital Visual Interface-digital
DVI-I	Digital Visual Interface-Integrated
E	
EEPROM	Electrically Erasable and Programmable Read Only Memory
F	
FLASH	FLASH memory
G	
G-TXT	Green Teletext
H	
HDMI	High Definition Multimedia Interface, digital audio and video interface
HP	Head Phone
I	
I^2C	Integrated IC bus
L	
LED	Light Emitting Diode
LVDS	Low Voltage Differential Signal, data transmission system for high
M	
MOSFET	Metal Oxide Semiconductor Field Effect Transistor
N	

NC	Not Connected
NVM	Non Volatile Memory: IC containing TV related data (for example, options)
O	
OSD	On Screen Display
P	
PC	Personal Computer
PCB	Printed Circuit Board (or PWB)
R	
RC	Remote Control transmitter
RGB	Red, Green and Blue. The primary color signals for TV. By mixing levels of R, G and B, all colors (Y/C) are
ROM	Read Only Memory
S	
SDA	Data signal on I^2C bus
SDRAM	Synchronous DRAM
SW	Sub Woofer / Software
T	
THD	Total Harmonic Distortion
V	
VGA	Video Graphics Array
Y	
YPbPr	Component video (Y= Luminance, Pb / Pr= Color difference signals B-Y and R-Y, other amplitudes w.r.t. to YUV)
Y/C	Video related signals: Y consists of luminance signal, blanking level and sync; C consists of color signal.

1. About this Manual

The purpose of Service Manual is to provide a guide line to engineers to repair different models. The appearance and capability is introduced in this Service Manual. It is better for repair engineer to have a rough idea of this model through reading the Service Manual. Please do pay attention to the item part of the disassembly when repair the machine and also do the protection of panel any time. When repairing the circuit board, please follow the requirement of RoHS and refer to the circuit diagram and repairing process that attached in the Service Manual. The method of firmware updated, the way of using the menu and some information that may be used when repairing are also attached in the Service Manual that provide repair engineer various choice.

1.1 Important

Only trained service personnel who are familiar with this BenQ Product shall perform service or maintenance to it. Before performing any maintenance or service, the engineer MUST read the “Important Safety Information”.

1.2 Trademark

2. Introduction

This section contains general service information, please read through carefully. It should be stored for easy access place.

2.1 RoHS (2002/95/EC) Requirements – Applied to all countries require RoHS.

The RoHS (Restriction of Hazardous Substance in Electrical and Electronic Equipment Directive) is a legal requirement by EU (European Union) for the global electronics industry which sold in EU and some counties also require this requirement. Any electrical and electronics products launched in the market after June 2006 should meet this RoHS requirements. Products launched in the market before June 2006 are not required to compliant with RoHS parts. If the original parts are not RoHS complaints, the replacement parts can be non ROHS complaints, but if the original parts are RoHS compliant, the replacement parts MUST be RoHS complaints.
If the product service or maintenance require replacing any parts, please confirming the RoHS requirement before replace them.

2.2 Safety Warning and Notice

Installation

1. Do not use your monitor under any of the following environmental conditions:
   - Extremely high or low temperature, or in direct sunlight
   - Dusty places
   - Highly humid, exposed to rain, or close to water
   - Exposed to vibrations or impacts in places such as cars, buses, trains, and other rail vehicles
   - Near heating appliances such as radiators, heaters, fuel stoves, and other heat-generating items (including audio amplifiers)
   - An enclosed place (such as a closet or bookcase) without appropriate ventilation
   - An uneven or sloping surface
   - Exposed to chemical substances or smoke
2. Do not block vents and openings by clothes or curtains.
3. Carry the monitor carefully.
4. Do not place the monitor face down on the floor or a desk surface directly. Otherwise, scratches on the panel surface may occur.
5. Do not place heavy loads on the monitor to avoid possible personal injury or damage to the monitor.
6. Ensure that children do not hang or climb onto the monitor.
7. Keep all packing bags out of reach of children.

Operation

1. To protect your eyesight, please refer to the user manual to set the optimal screen resolution and the viewing distance.
2. To reduce eye fatigue, take a break on a regular basis while using the monitor.
   Avoid taking either one of the following actions for a long time. Otherwise, burn marks may occur.
   - Use the monitor in the aspect ratio of 16:9.
   - Place a still image (such as an OSD menu, fixed text or image) on the screen.
3. To avoid possible damage to the monitor, do not touch the monitor panel by hand, pen, or any other sharp objects.
4. Excessively frequent plug and unplug of video connectors (D-sub) may cause damage to the monitor.
5. This monitor is designed mainly for personal use. If you want to use the monitor in a public place or a harsh environment, contact your nearest BenQ service center for assistance.
6. To avoid possible electric shock, do not dissemble or repair the monitor.
7. If a bad smell or an abnormal sound appears to come from the monitor, contact your nearest BenQ service center for assistance immediately.

Cleaning

1. Ensure that the power is unplugged before cleaning your monitor
2. Use a monitor cleaner and a soft cloth to clean your monitor.
3. Do not use solvents such as alcohol to clean your monitor.

Power

1. To avoid possible damage to the monitor, do not use it in a region where power supply is unstable.
2. Ensure that the power cord is connected to a grounded power outlet before turning on the monitor.
3. Use only the power cord provided by BenQ.
4. Never use a power cord that appears to be damaged or frayed.
5. To avoid possible danger, observe the total electric load when using the monitor with a (multi-outlet) extension cord.
6. Always turn off the monitor before unplugging the power cord.

2.3 Compliance Statement

Caution: This Optical Storage Product contains a Laser device. Refer to the product specifications and your local Laser Safety Compliance Requirements.

3. General Description

This new LCD (Liquid Crystal Display) monitor BenQ GL950A/GL950AM/G950A/G950AM offers numerous features and functions, for example:

- Panel Type: TN + LED (GL950A/GL950AM)
- Panel Type: TN + CCFL (G950A/G950AM)
- Minimal space requirements thanks to slim casing
- Contrast ratio 12 million:1 (DCR), brightness 250nits (GL950A/GL950AM)
- Contrast ratio 50000:1 (DCR), brightness 200nits (G950A/G950AM)
- MAX. resolution: 1366X768
- Viewing Angle (H/V), CR≧10: 170/160 (GL950A/GL950AM)
- Viewing Angle (H/V), CR≧10: 90/65 (G950A/G950AM)
- Presentation of up to 16.7 M colors (in conjunction with an appropriate graphics card)
- Automatic scanning of horizontal frequencies from 30 to 83 kHz and refresh rates (vertical frequencies) from 50 to 76 Hz (absolutely flicker-free)
- Digital screen controller with microprocessor for storing 15 different display modes
- Freely adjustable color alignment for matching the screen colors to the colors of various input and output devices
- Convenient operation via integrated OSD (On-Screen-Display) menu
- VESA-DDC compatibility
- Plug & play capability
- Power management for reducing power consumption when the computer is not in use

This operating manual contains important information you require to start up and run your LCD monitor.
This specification defines the requirements for the 18.5″ MICROPROCESSOR based Multi-mode supported high resolution color LCD monitor. This monitor can be directly connected to general 15-pin VGA connector and supports VESA DPMS power management and plug & play function.

Additional information

Due to the nature of liquid crystal display (LCD) technology, the picture resolution is always fixed. For the best display performance, please set the display resolution to 1366X768 pixels with an aspect ratio of 16:9. This is called “Native Resolution” or maximal resolution - that is, the clearest picture. Lower resolutions are displayed on a full screen through an interpolation circuit. Image blurring across pixel boundaries can occur with the interpolated resolution depending upon the image type and its initial resolution.

4. Related service information

This Service Manual contains general information. There are 2 levels of service:

Level 1: Cosmetic / Appearance / Alignment Service

Level 2: Circuit Board or Standard Parts Replacement

Service Web Site

eSupport URL: **http://esupport.benq.com**

5. Product Overview

5.1 Monitor Specifications

		GL950A	GL950AM	G950A	G950AM
		Conf. 1 D-sub (include component source)	Conf. 2 D-sub (include component source) + speaker	Conf. 3 D-sub (include component source)	Conf. 4 D-sub (include component source) + speaker
Panel / Display	Panel Type (TN / VA / IPS)	TN + LED	TN + LED	TN + CCFL	TN +CCFL
	Panel Size	18.5"W(16:9)	18.5"W(16:9)	18.5"W(16:9)	18.5"W(16:9)
	Display Area	409.8x230.4	409.8x230.4	409.8x230.4	409.8x230.4
	Max. Resolution	1366X768	1366X768	1366X768	1366X768
	Pixel Pitch	0.3	0.3	0.3	0.3
	Brightness (Typ.)	250 cd/㎡	250 cd/㎡	200 cd/㎡	200 cd/㎡
	Contrast Ratio (Typ.) / DCR (Min.)	1000:1(Panel)/ 12M:1 (DCR)	1000:1(Panel)/ 12M:1 (DCR)	700:1(Panel)/ 50000:1 (DCR)	700:1(Panel)/ 50000:1 (DCR)
	Viewing Angle (H/V), CR≧10	170/160	170/160	90/65	90/65
	Display Colors	16.7M	16.7M	16.7M	16.7M
	Response Time	5ms (Tr+Tf)	5ms (Tr+Tf)	5ms (Tr+Tf)	5ms (Tr+Tf)
	GtG response Time	N/A	N/A	N/A	N/A
	MPRT	N/A	N/A	N/A	N/A
	NTSC ratio	68~72%	68~72%	65%	65%
Video	BenQ Senseye™ Technology	Senseye 3	Senseye 3	Senseye 3	Senseye 3
	BenQ Senseye™ Preset Modes	6 Modes (by hotkey) : Standard / Movie / Game / Photo / s-RGB / ECO	6 Modes (by hotkey) : Standard / Movie / Game / Photo / s-RGB / ECO	6 Modes (by hotkey) : Standard / Movie / Game / Photo / s-RGB / ECO	6 Modes (by hotkey) : Standard / Movie / Game / Photo / s-RGB / ECO
	Color Temperature Selection	Normal (6500°K) / Reddish (5800°K) / Bluish (9300°K) / User Mode	Normal (6500°K) / Reddish (5800°K) / Bluish (9300°K) / User Mode	Normal (6500°K) / Reddish (5800°K) / Bluish (9300°K) / User Mode	Normal (6500°K) / Reddish (5800°K) / Bluish (9300°K) / User Mode
	AMA (Over Drive)	No	No	No	No
	Hor. Frequency (kHz)	30-83	30-83	30-83	30-83

	Ver. Frequency (Hz)	50-76	50-76	50-76	50-76
	Video Bandwidth (MHz)	110	110	110	110
Audio	Speakers (built-in)	No	1W x 2	No	1W x 2
Input/Output	PC Video Input	D-sub	D-sub	D-sub	D-sub
	Audio line in	No	Yes	No	Yes
	Earphone Jack	No	Yes	No	Yes
Power Supply	Voltage Rating	AC: 100~240V (Built-in)	AC: 100~240V (Built-in)	AC: 100~240V (Built-in)	AC: 100~240V (Built-in)
	Power-On Mode	<20W (max)	<20W (max)	<20W (max)	<20W (max)
	Standby Mode	<0.3W (max)	<0.3W (max)	<0.3W (max)	<0.3W (max)
	Power Off Mode	<0.3W (max)	<0.3W (max)	<0.3W (max)	<0.3W (max)
Mechanical Design	Chassis Colors (proposal A)	Glossy black, detail refer to artwork	Glossy black, detail refer to artwork	Glossy black, detail refer to artwork	Glossy black, detail refer to artwork
	Carton	Brown Carton with at least C flute (BE flute CTN for BQjp shipments)	Brown Carton with at least C flute (BE flute CTN for BQjp shipments)	Brown Carton with at least C flute (BE flute CTN for BQjp shipments)	Brown Carton with at least C flute (BE flute CTN for BQjp shipments)
	Power LED	Green (ON)/ Amber (Standby)	Green (ON)/ Amber (Standby)	Green (ON)/ Amber (Standby)	Green (ON)/ Amber (Standby)
	Tilt (Up / Down)	15° ~ -5°	15° ~ -5°	15° ~ -5°	15° ~ -5°
	VESA Wall Mount	100 x 100 mm	100 x 100 mm	100 x 100 mm	100 x 100 mm
	Kensington Lock	Yes	Yes	Yes	Yes
	Container Loading (foam cushion 40')	>2000	>2000	>2000	>2000
	Container Loading (foam cushion 20')	>1000	>1000	>1000	>1000
Multi-language Support	OSD	17 Languages (English / Francais / Deutsch / Italiano / Espanol / Polish / Czech / Hungarian / Serbo-croatian / Romanian / Netherlands / Russian / Swedish / Portuguese / Japanese / Chinese /	17 Languages (English / Francais / Deutsch / Italiano / Espanol / Polish / Czech / Hungarian / Serbo-croatian / Romanian / Netherlands / Russian / Swedish / Portuguese / Japanese / Chinese	17 Languages (English / Francais / Deutsch / Italiano / Espanol / Polish / Czech / Hungarian / Serbo-croatian / Romanian / Netherlands / Russian / Swedish / Portuguese / Japanese / Chinese /	17 Languages (English / Francais / Deutsch / Italiano / Espanol / Polish / Czech / Hungarian / Serbo-croatian / Romanian / Netherlands / Russian / Swedish / Portuguese / Japanese / Chinese

		S-Chinese)	/ S-Chinese)	S-Chinese)	/ S-Chinese)
Other feature	Vista	Basic	Basic	Basic	Basic
	Win 7	NA	NA	NA	NA
	Dynamic Power Saving (DPS)	Yes	Yes	Yes	Yes
Accessories		Refer to SKU list	Refer to SKU list	Refer to SKU list	Refer to SKU list
Regulation Approvals		Refer to the worksheet "RFQ-Regulatory"	Refer to the worksheet "RFQ-Regulatory"	Refer to the worksheet "RFQ-Regulatory"	Refer to the worksheet "RFQ-Regulatory"

5.1.1 Certification

Region	Shipment Country (Pls select)	Country	Certification / Requirement						Remark
			Request for Certification (Pls select)	Certification (Black is mandatory and blue is voluntary)	Regulatory Type (safety/safety & EMC/EMC/GP)	Applied by vendor	Applied by BenQ	BenQ Sample Reguest	
Asia-Pacific	V	Australia, New Zealand	V	C-Tick	EMC	V			Must include radiation test result for frequency above 1GHz
	V	China	V	CCC	Safety & EMC	V			Including CCC certificate, CCC report and CCC label printing permission
			Eff(Minimun) Level = ☑ 1 ☐ 2	Energy Label	GP	V			
			V	China RoHS	GP	Vender provide relevant information and report			
			V	China WEEE	GP	See Remark			Recycling notice in User Manual is required.
			V	CECP	GP	V		1 set.	One sample of DVT is required for

									the assigned third-party test.
	V	Japan	V	VCCI	EMI	V			
			V	J-Moss	GP	Vender provide relevant information and report			
			Class Level: ★ ★★ ★★★	PC3R	GP	Vender provide relevant information and report	V	If VOC test is requested, please provide 1 sample for testing.	Meet the PC3R requirement of 2009 version.
	V	Korea		KCC	EMC	V			
			V	KC	Safety & EMC	V			
			V	e-Standby	GP	Vender provide relevant information and formal test report (Korean)	V	1 set.	One sample of DVT is required for the assigned third-party test.
			V	Korea RoHS	GP	Vender provide relevant information and report			
	V	Singapore	V	PSB	Safety	V			

	V	Taiwan	V	BSMI	Safety & EMC	V			Including BSMI certificate, BSMI report and BSMI authorizatio n letter for BENQ if the applicant of BSMI certificate is vendor and vendor will perform the clearance for BenQ.
	V	Saudi Arabia	V	SASO	Safety		V		
	V	Turkey	V	EEE Directive	GP	Vender provide relevant information and report	V		TR RoHS
			V	CE	Safety & EMC	V			Same as the CE of EU.
America	V	Argentina	V	S Mark	Safety	V			TUV-S, IRAM-S…etc
	V	Canada	V	USA-Canada Certification	Safety	V			Applicable safety certification (such as cULus, cCSAus…etc .)
			V	IC	EMC	V			
	V	United States	V	USA-Canada Certification	Safety	V			Applicable safety certification (such as cULus,

									cCSAus…etc.)
			V	FCC	EMC	V			
			Class Level: gold silver cuprum	EPEAT	GP	Vender provide relevant information and report	V		
	V	Mexico	V	NOM	Safety	V			
European Union	V	Member countries of EU	V	CE	Safety & EMC	V			
			V	EuP	GP	Vender provide relevant information and report			
			V	WEEE	GP	Vender provide relevant information and report			
			V	REACH	GP	Vender provide relevant information and report			
	V	Germany		GS	Safety	V			
			V	Bauart	Safety	V			
			V	ISO9241-307	Safety	V			
			V	MPR II	Safety	V			
Eastern Europe	V	Russia	V	GOST	Safety & EMC		V		
	V	Ukraine	V	UkrSEPRO	Safety	V			
			V	EMC DoC	EMC	V			
International	V	CB Scheme	V	CB	Safety	V			for CE DOC or PSE DOC or international certification
International	V	International	V	RoHS	GP	Vender provide relevant			

						information and report			
International	V	International	V	BenQ ecoFACTS	GP	Vender provide relevant information and report			Follow ecoFACTS Checklist in RFQ
International	V	All	V	Energy Star	GP	V			Including Test Report by EPA recognition of Accreditation Laboratory and Certificate by EPA recognition of Certification Body (CB). Effective date: 2011-1-1. BenQ phase in date: 2010-12-6.
Below just for GL950A/GL950AM									
International	V	International		TCO'03	Safety & GP	V			
			V	TCO Displays 5.0	Safety & GP	V			

5.2 Panel Inspection Specification

1 Scope:

1.1 The incoming inspection standards shall be applied to TFT-LCD Modules (hereinafter called "Modules") that supplied by AU Optronics Corporation (hereinafter called "seller").

1.2 Specifications contains

_ Electrical inspection specification

_ Appearance specification

_ Outside dimension specification

2 Incoming inspections:

The buyer (customer) shall inspect the modules within twenty calendar days of the delivery date (the "inspection period") at its own cost. The results of the inspection (acceptance or rejection) shall be recorded in writing, and a copy of this writing will be promptly sent to the seller.

The buyer may, under commercially reasonable reject procedures, reject an entire lot in the delivery involved if, within the inspection period, such samples of modules within such lot show an unacceptable number of defects in accordance with this incoming inspection standards, provided however that the buyer must notify the seller in writing of any such rejection promptly, and not later than within three business days of the end of the inspection period. Should the buyer fail to notify the seller within the inspection period, the buyer's right to reject the modules shall be lapsed and the modules shall be deemed to have been accepted by the buyer.

3 Inspection sampling method:

Unless otherwise agree in writing, the method of incoming inspection shall be based on MIL-STD-105E.

3.1 Lot size: Quantity per shipment lot per model.

3.2 Sampling type: Normal inspection, single sampling.

3.3 Sampling level: Level II.

3.4 Acceptable quality level (AQL):

Major defect: AQL=1.0%

Minor defect: AQL=2.5%

4 Inspection instruments:

4.1 Pattern generator: LD-2000 or equivalent model.

4.2 Video board: AUO video board or equivalent. The output of the signal should comply with the specification provided by AUO.

4.3 Luminance colorimeter: Topcon BM-7 or equivalent model.

5 Inspection environment conditions:

5.1 Room temperature: 20 ~ 25℃.

5.2 Humidity: 65±5% RH.

5.3 Illumination: Fluorescent light (Day-Light Type) display surface illumination to be 300 ~ 700 Lux. (standard 500Lux.)

5.4 To be a distance about 35±5 cm in front of LCD unit, viewing line should be perpendicular to the surface of the module judge the visual appearance with human's eyes (±30° viewing edge will be allowed).

5.5 Take off the protector of polarizer while judging the display area.

5.6 If there is any question while judging, check the panel again while operating.

6 Classification of defects:

Defects are classified as major defects and minor defects according to the degree of defectiveness defined herein.

Major defects: A major defect is a defect that is likely to result in failure, or to reduce materially the usability of the product for its intended purpose.

Minor defects: A minor defect either is a defect that is not likely to reduce materially the usability of the product for its intended purpose, or is a departure from an established having little bearing on the effective use or operation of the product.

6.1 Electrical inspection specification

	Inspection Item	Specification	
1	Line / Block defect	Can't be seen.	
2	Bright dots	≦ 2 dots (Note1, 4)	
3	Dark dots	≦ 3 dots	
4	Total dots defect	≦ 5 dots	
5	Adjacent dot defect (Note 1, 2, 3)	Two continuous bright dots (vertical, horizontal, oblique):	≦ 1 pairs
		Three or more continuous bright dots (vertical, horizontal, oblique):	NA
		Two continuous dark dots (vertical, horizontal, oblique):	≦ 1 pairs
		Three or more continuous dark dots (vertical, horizontal, oblique):	NA
		Distance between 2 Bright dots:	≧ 15 mm
		Distance between 2 Dark dots:	≧ 15 mm
		Distance between Bright and Dark dot:	≧ 15 mm
6	Image Sticking / Retention	**Short time (retention):** Can't be visible by ND 8%, after changing pattern, the previous pattern shall be invisible (disappear) within 5 seconds. **Long time (sticking):** Turn on the panel and display with the test pattern (4X4 black & white, Figure 1) for 8 hours. After 8 hr, change display pattern to 50% gray pattern. After 5 min, use 8% ND Filter at 50% Gray Pattern, under 0° viewing angle, the Image Sticking Symptom must be invisible. Figure 1 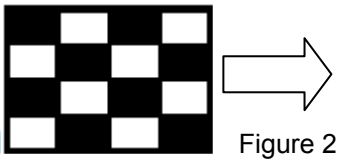 Figure 2	
7	Display Non-uniformity	Not noticeable by using of ND filter or judged by equivalent limit sample (Note 5, 6)	
8	Newton ring	Not noticeable	
9	Rubbing mark	Not noticeable	
10	Dim line	Not noticeable	

Note 1: For bright dot defect, bright area should be larger than 1/2 area of a sub-pixel to be count as 1 dot defect. A dot defect that is smaller than the defined dot defect will be treated as small bright dot.

The drawing of 1/2 area sub-pixel definition: The 1/2 area sub-pixel can be defined as below one or more of specific shapes (Fig.1).

Fig.1

Fig.2

All bright dot defects should not be noticeable by observer under specified inspection environment (Please refer to item 5).

Note 2: (Fig.2) Adjacent-dot defect (refer to picture, dot 1,2,..,8 around A are all A's adjacent dots) should be inspected under the same display pattern in any one of White /Black /Red /Green /Blue /Monotone Gray pattern.

Note 3: Adjacent-dot defect should be observed under any one of White /Black /Red /Green /Blue pattern. 1 pair of bright dots equals 2 dots. Inspection patterns: Standard inspection patterns of dot defect are listed below. AUO uses these patterns as standard criteria for judging dot defect. Please inform AUO if any other pattern is to be used to examine dot defect.

Test Pattern	Defect
Full Black	For bright dot(s)
Full White	For dark dot(s)
Monotone Red /Green /Blue	For bright and dark dot(s)

Note 4: The judgment criteria of particle occurred bright dot is the same as bright dot judgment criteria.

Note 5: The display uniformity (general more) symptoms will use 8% ND Filter. That is, the definition of Not Noticeable means the symptom can be covered by 8% ND Filter.

Note 6: The inspection method of ND Filter - holding ND filter in front of the panel around 1 cm and examine the panel from 35±5 cm in the front view for 3 seconds.

6.2 Appearance inspection specification

Judge area	Judge item		Inspection specification			Judge criterion	
						Major	Minor
Active Area	Particles, scratch and bubbles in display area (Note 1, 2, 3)	Round	Average diameter :(mm)		Numbers		○
			D<0.15		Disregarded		
			0.15≦D≦0.5		N≦4		
			0.5<D		N=0		
		Liner	Width: W (mm)	Length: L (mm)	Numbers		○
			0.05≦W≦0.1	L≦5	N≦5		
	Defect		Eyes should not find it.			○	
	Dirt					○	
	Grains					○	
	Glass broken		No (Note 3)			○	
	Bubble in cell (Active area)		Eyes should not find it.			○	
From active area outside	The end of polarizer		The edge of polarizer can't be seen. 1.7mm (Min)				○
Bezel	Scratch		No harm				○
	Dirt						○
	Wrap		No dangerous			○	
	Sunken		No harm			○	
Label (S/N, B/L, Week code)	No label		No			○	
	Invert label					○	
	Broken					○	
	Dirt		Word can be read.			○	
	Not clear						○
	Word out of shape						○
	Mistake		No				○
	Position		Be attached on right position				○
Solder	Appearance		Can't see the abnormal color, shape, hurt, dirt (fused goods, etc.). If it is necessary, please prepare sample.			○	
Screw	Not enough		No			○	
	Limp		No			○	
White sheet	Shell, rub		No			○	
Connector	Connection status		Need correct connection.			○	
FPC/FFC	Broken		No			○	
BM area	Around Red Line		No concern				○

Note 1: When L>=2W, defect count as liner defect.

Note 2: D=1/2(W+L)

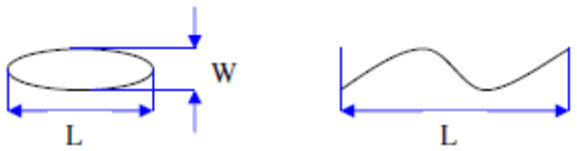

Note 3: To verify the responsibility of following defects was caused by supplier, the IQC checks as requested on above items before mass production such as the Polarizer Scratch, Gap Mura, TFT Glass broken…etc.

6.3 Outside dimension specification:

Testing Order	Inspection Item		Specification	Note
	Name	Unit	Tolerance	
1	Outside dimension (vertical)	mm	± 0.5 mm	(Please refer to the product spec for detailed dimension definition) Note 1
2	Outside dimension (horizontal)	mm	± 0.5 mm	
3	Outside dimension (thickness)	mm	± 0.5 mm	
4	Weight	g	± 50 g	
5	Display tolerance ABS (a-b)	mm	1.0 mm (Max.)	Note 2
6	Display tolerance ABS (c-d)	mm	1.0 mm (Max.)	Note 2
7	Panel gap (Y)	mm	0.8 mm (Max.)	Note 3

Note 1: Thickness doesn't include bending reason.

Note 2: Display tolerance definition

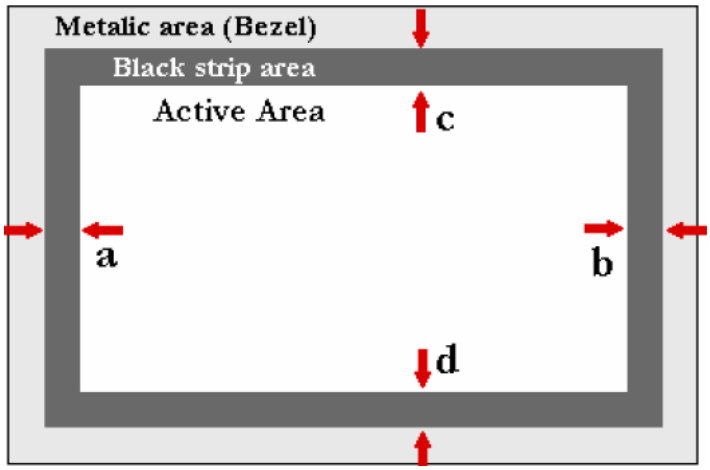

Note 3: Panel gap (Y) definition

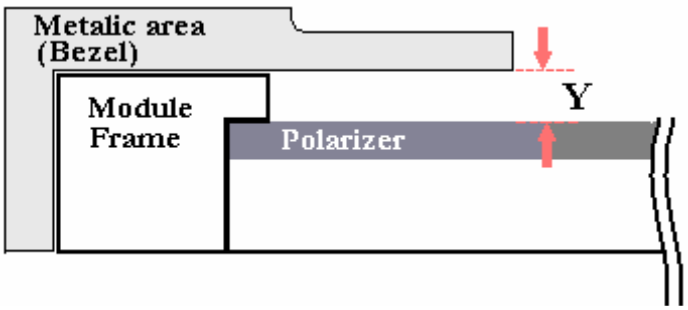

7 Inspection judgments:

7.1 The judgments of the shipped lot (acceptance or rejection) should follow the sampling plan of MIL-STD-105E, single sampling, normal inspection, level II.

7.2 If the number of defects is equal to or less than the applicable acceptance level, the lot shall be accepted.

7.3 If the number of defects is more than the applicable acceptance level, the lot shall be rejected and the buyer should inform the seller of the result of incoming inspection in writing

8 Precautions:

Please pay attention to the following items when you use the LCD Module with back-light unit.

8.1 Do not twist or bend the module and prevent the unsuitable external force for display module during assembly.

8.2 Adopt measures for good heat radiation. Be sure to use the module within the specified temperature.

8.3 Avoid dust or oil mist during assembly.
8.4 Follow the correct power sequence while operating. Do not apply the invalid signal, otherwise, it will cause improper shut down and damage the module.
8.5 Less EMI: it will be more safety and less noise.
8.6 Please operate module in suitable temperature. The response time & brightness will drift by different temperature.
8.7 Avoid displaying a fixed pattern (exclude the white pattern) for a long period, which may lead to image sticking.
8.8 Be sure to turn off the power when connecting or disconnecting the circuit.
8.9 Polarizer scratches easily, please handle it carefully.
8.10 Display surface never likes dirt or stains.
8.11 A dewdrop may lead to destruction. Please wipe off any moisture before using module.
8.12 Sudden temperature changes cause condensation, and it will cause polarizer damaged.
8.13 High temperature and humidity may degrade performance. Please do not expose the module to the direct sunlight and so on.
8.14 Acetic acid or chlorine compounds are not friends with TFT display module.
8.15 Static electricity will damage the modules; please do not touch the module without any grounded device.
8.16 No parts of the panel should be dismantled without the presence of AU engineer or the product will not be warranted.
8.17 Be careful do not touch the rear side directly because of the backlight high voltage.
8.18 No strong vibration or shock. It will cause module broken.
8.19 Storage the modules in suitable environment with regular packing.
8.20 Be careful of injury from a broken display module. Please avoid the pressure adding to the surface (front or rear side) of modules, because it will cause the display non-uniformity or other function issue.

Level 1 Cosmetic / Appearance / Alignment Service

Visual Inspection & Cleaning

- Cleaning. Always unplug your monitor from the wall outlet before cleaning. Clean the LCD monitor surface with a lint-free, non-abrasive cloth. Avoid using any liquid, aerosol or glass cleaners.
- Slots and openings on the back or top of the cabinet are for ventilation. They must not be blocked or covered. Your monitor should never be placed near or over a radiator or heat source, or in a built-in installation unless proper ventilation is provided.
- Never push objects or spill liquid of any kind into this product.

F/W Upgrade SOP

1. Materials list

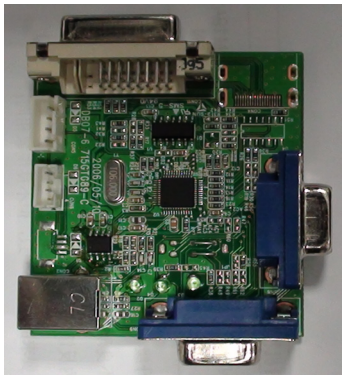

ISP JIG: 715GT089-B/C

VGA cable

TPV P/N: 089G728 GAA DB

PC

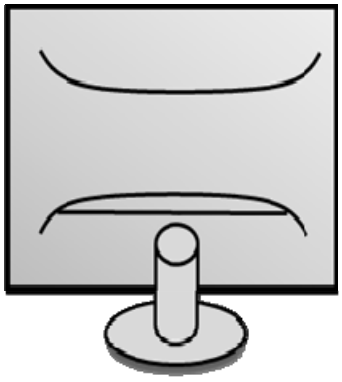

Monitor

USB cable

TPV P/N: 089G1758 X

USB port driver

ISP tool: V4.5.0.8.0

New F/W

2.Connection

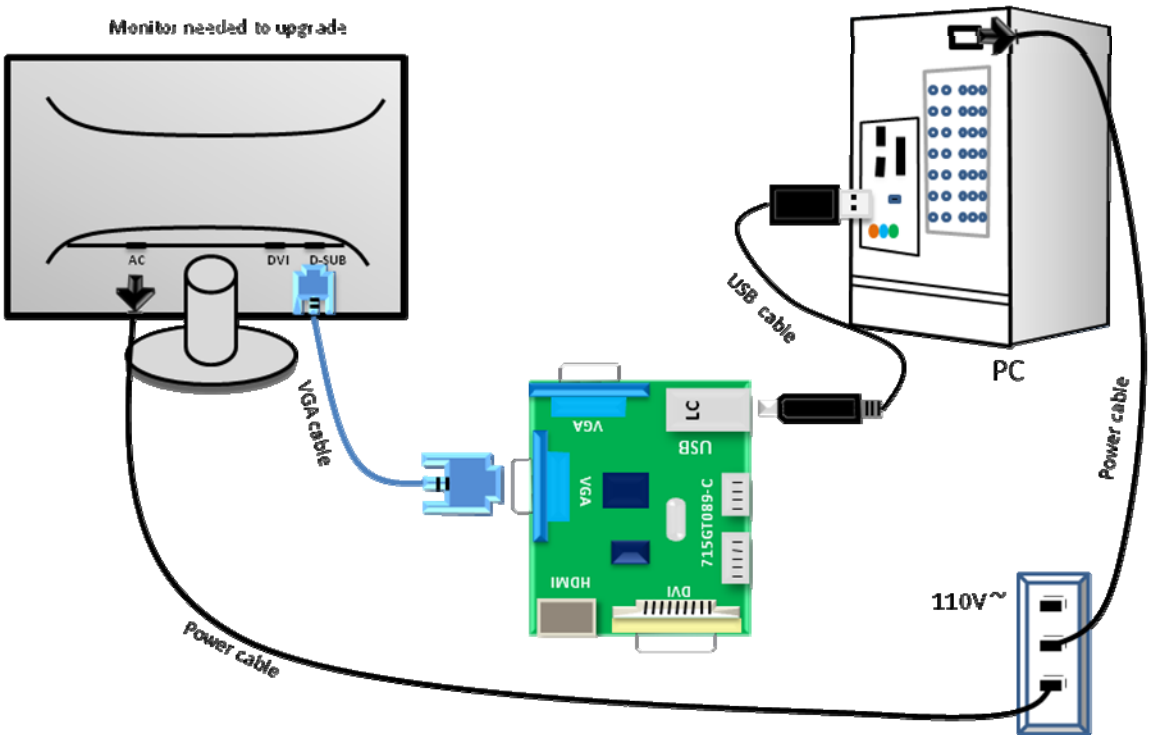

3.Install USB driver.

3.1. When insert the USB cable to PC USB port, will pop up a Hardware Wizard to help you install the USB driver if you use this ISP board first time. You can install it successfully as the below instruction step by step.

Remark: The USB driver files path: D:\FTC100103(Mstar)\FTCUSB.INF

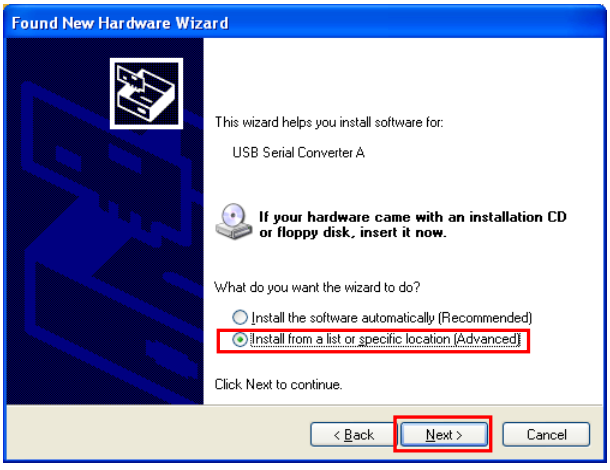

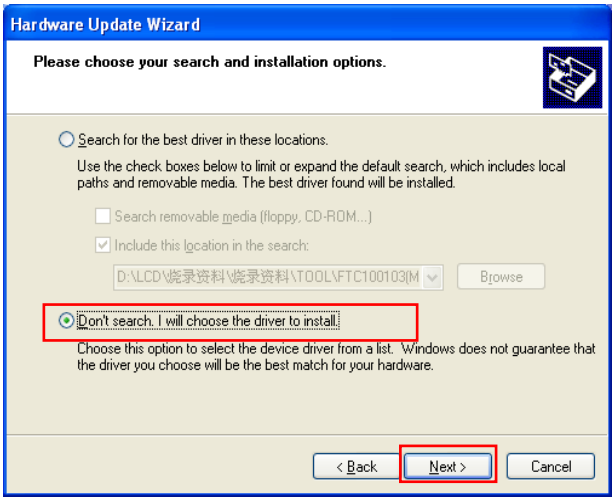

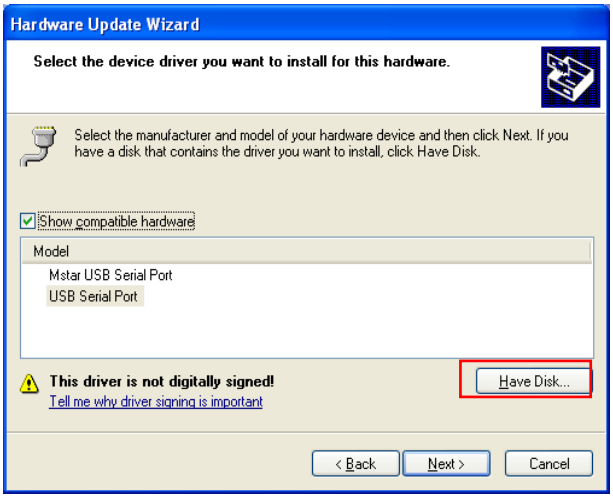

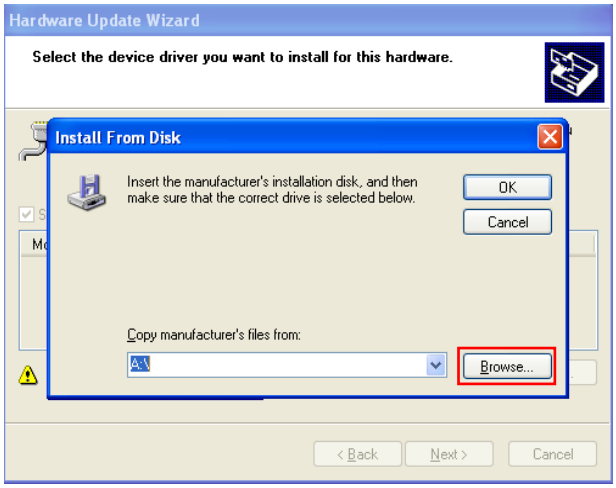

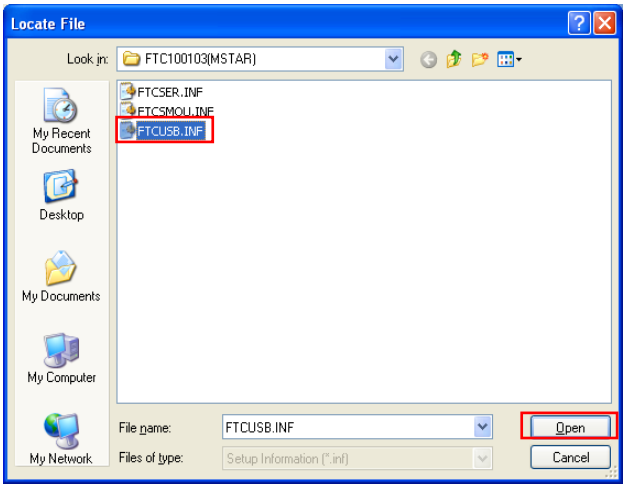

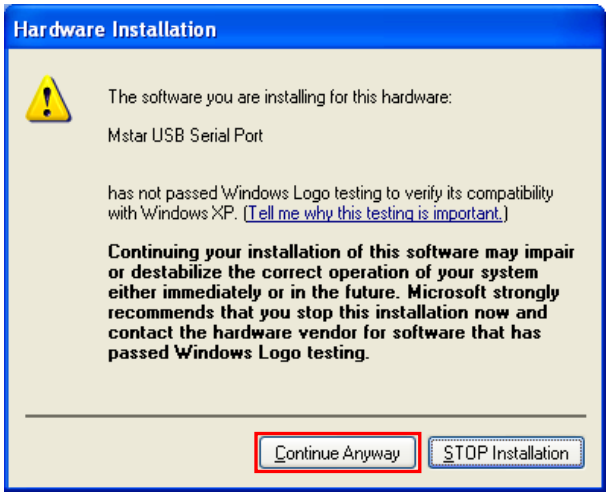

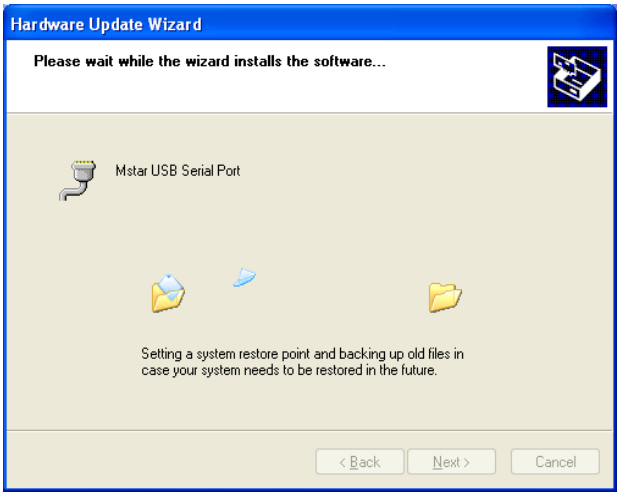

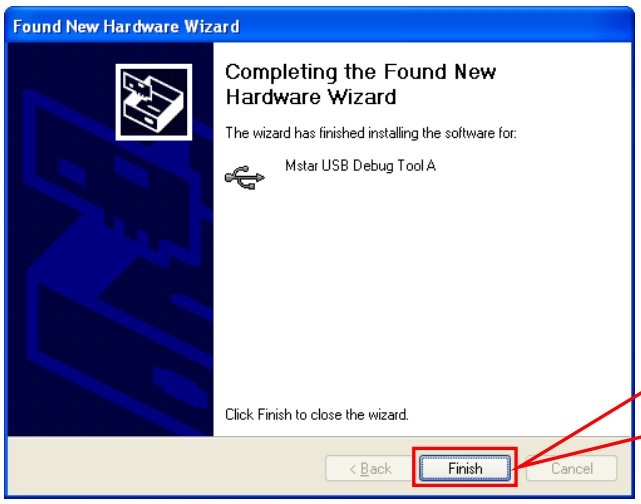

Click “Finish” to complete the USB serial port driver installation.

4. Install the ISP tool.

4.1.Copy the three files in one folder.

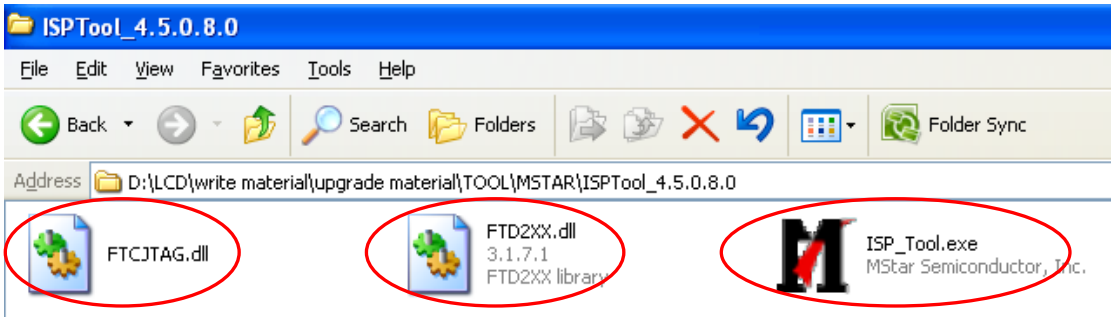

4.2. Double-click

to run the ISP tool.

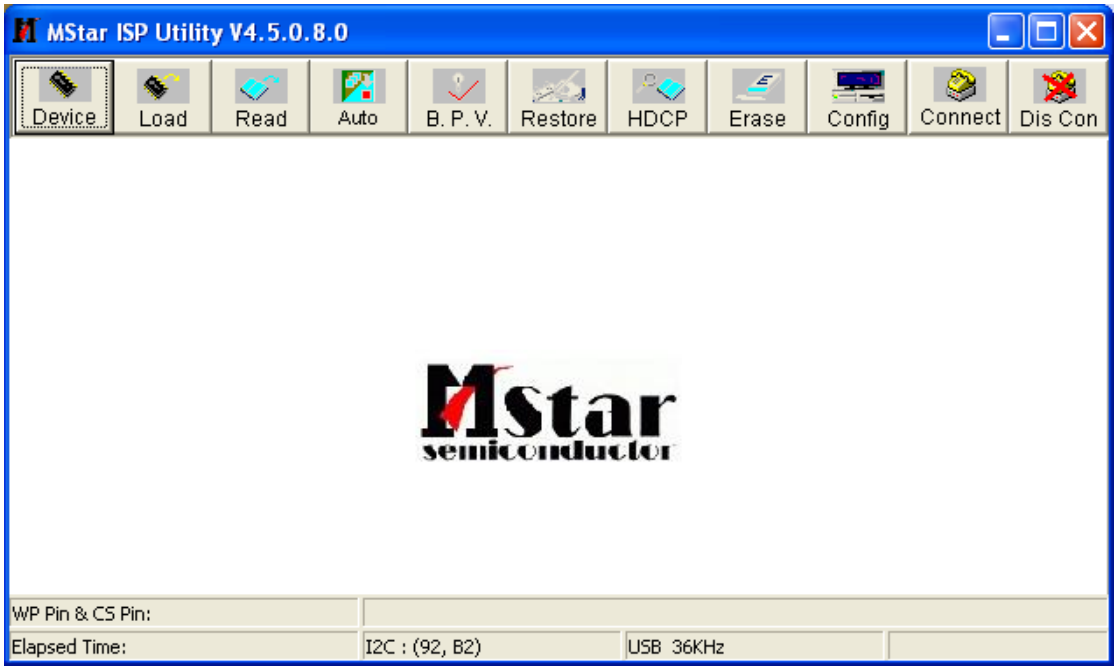

4.3. Set the parameters in “Device” window. Tick “WP Pin pull to high during ISP”.

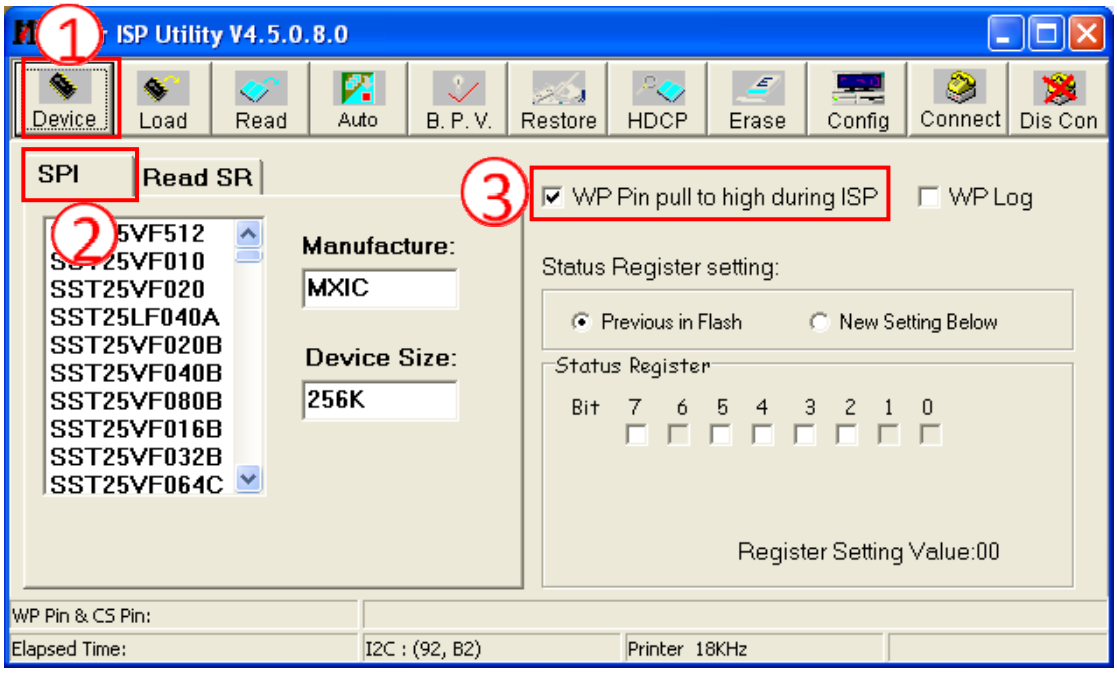

4.4. Connect to the monitor. Click “Connect”. If the tool communicate with monitor successfully, the tool will detect the flash type of monitor.

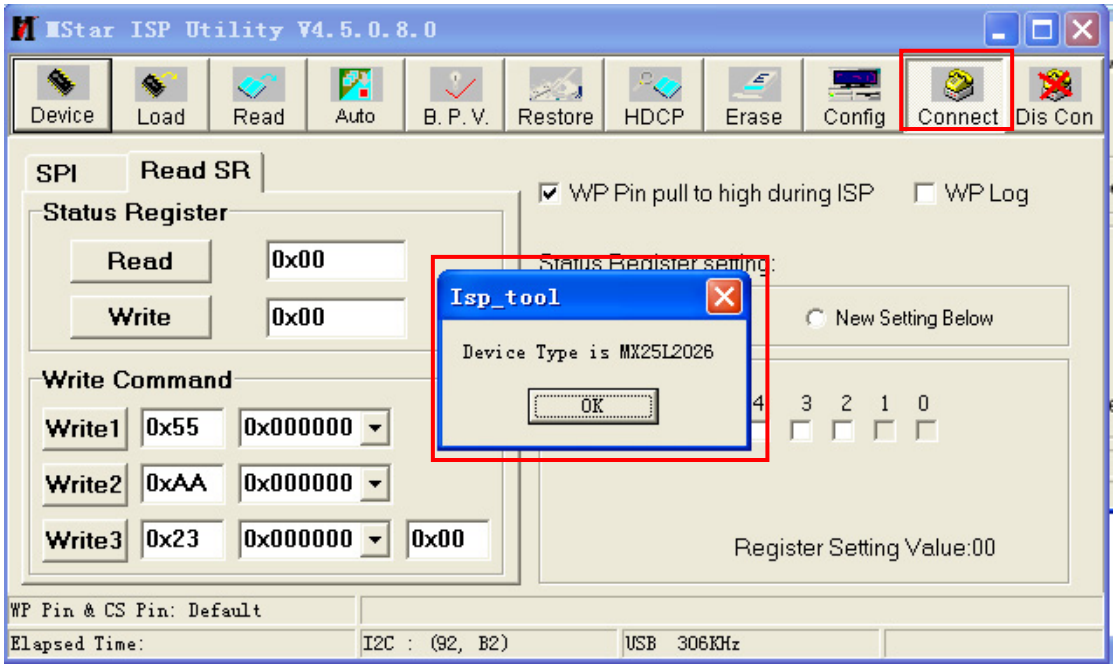

4.5. Load the F/W you want to upgrade.

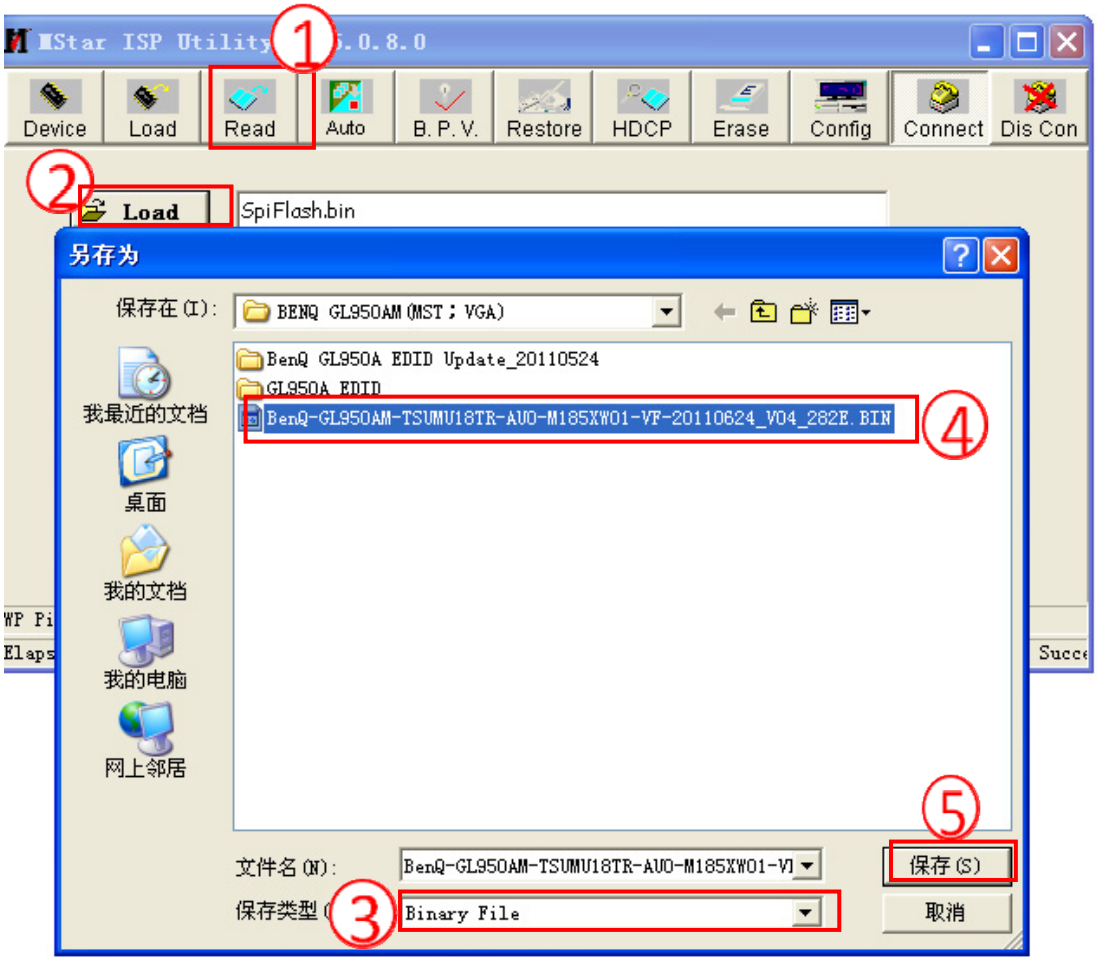

4.6. Set the restore address.

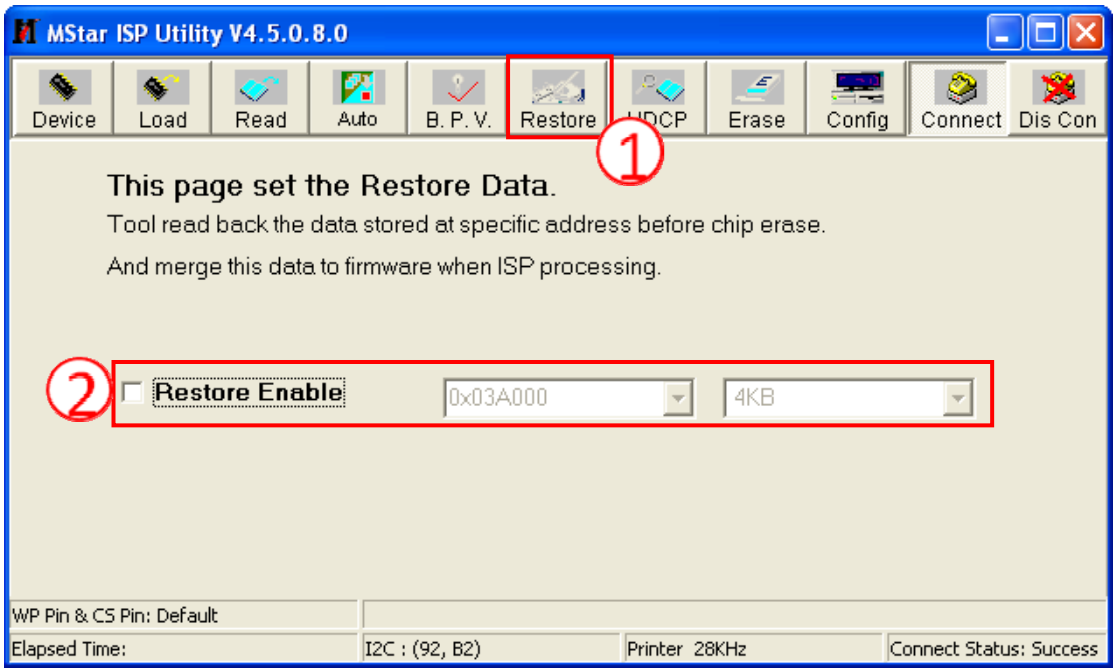

4.7. Set parameter in “Auto” window.

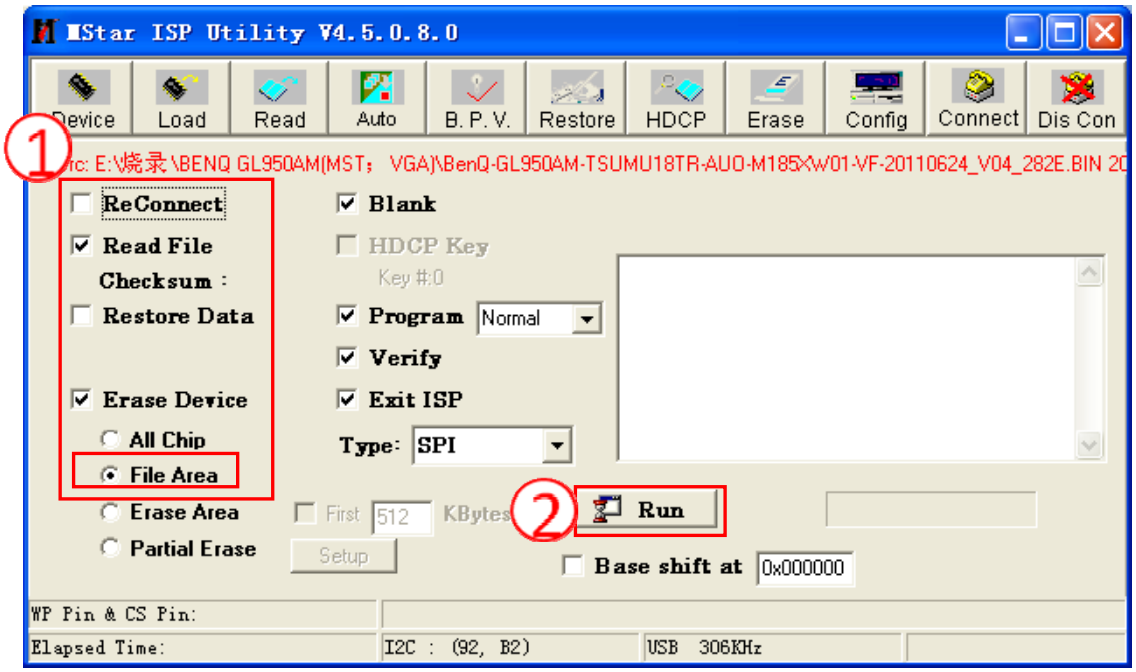

4.8.Processing of upgrade. After clicking “Run”, the tool start to program. It is forbided to power off monitor or switch off connection during programming.

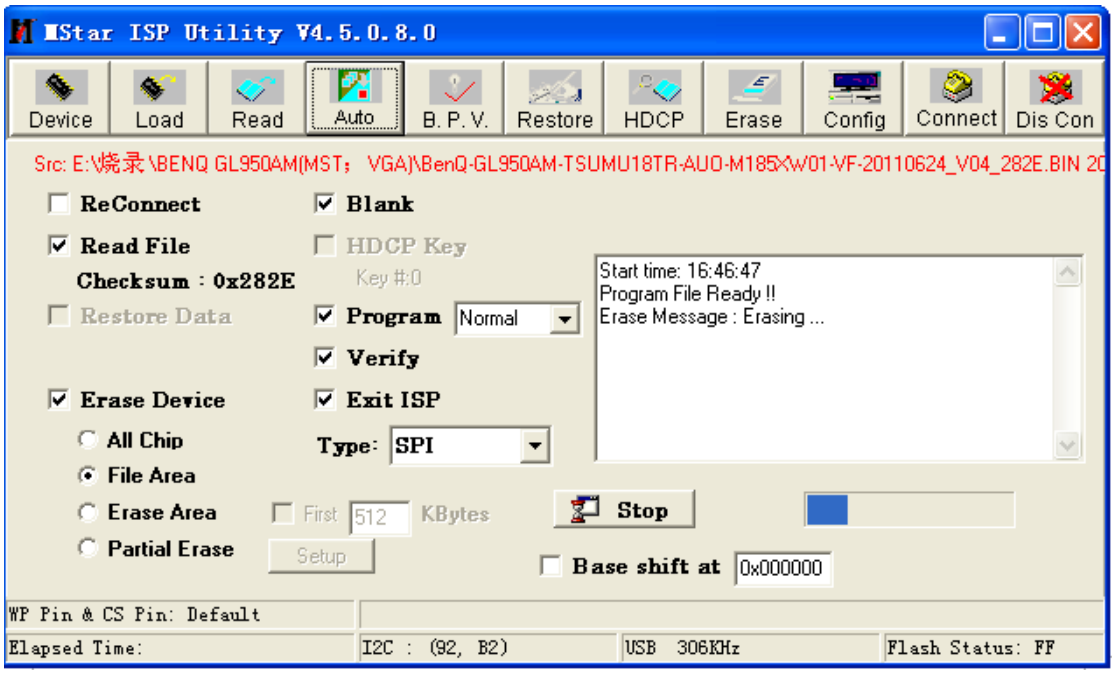

4.9.Successful upgrade. When upgrade successful, there will be green Pass letter appearing.

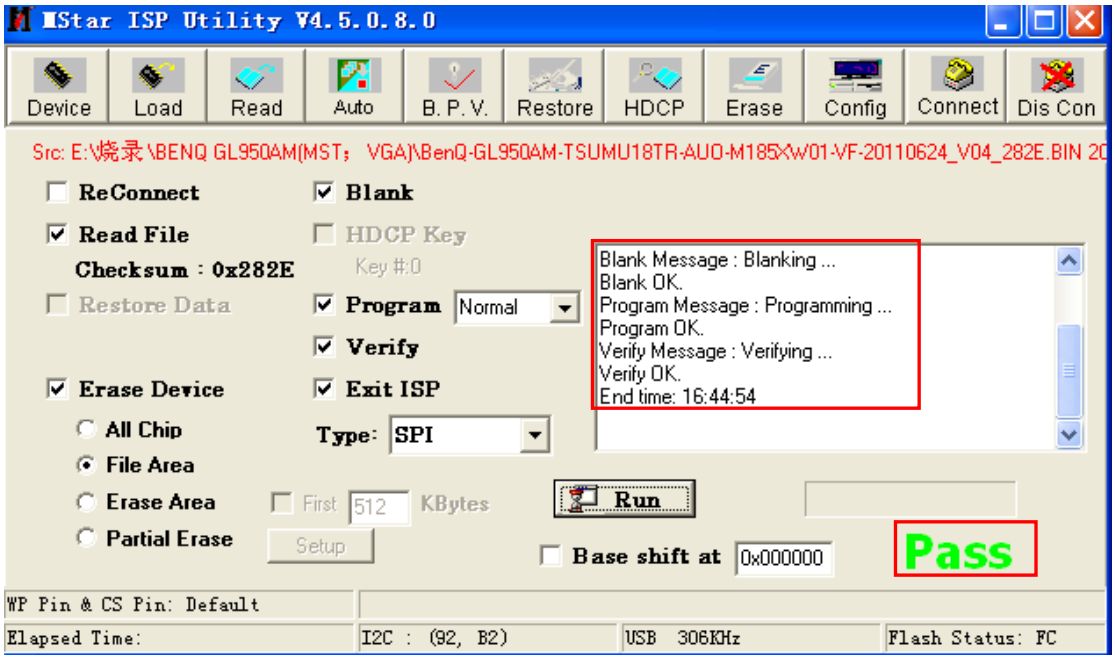

5. Check the FW version after upgrade.

(1)Connect signal source and power cable to monitor and DC off it.

(2) Press “menu” key and “power on” key synchronously as below figure. When the screen lights, release the two buttons and then press “menu” again to open below factory menu.

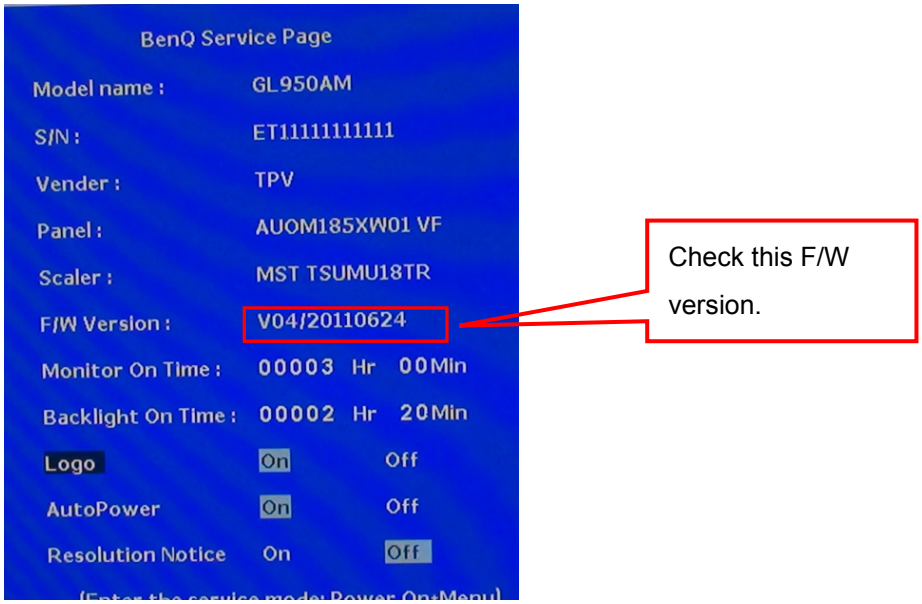

(3)If the version is right, please do factory reset in user menu as below, or re-upgrade F/W as the above steps. The reset will turn off burn in mode.

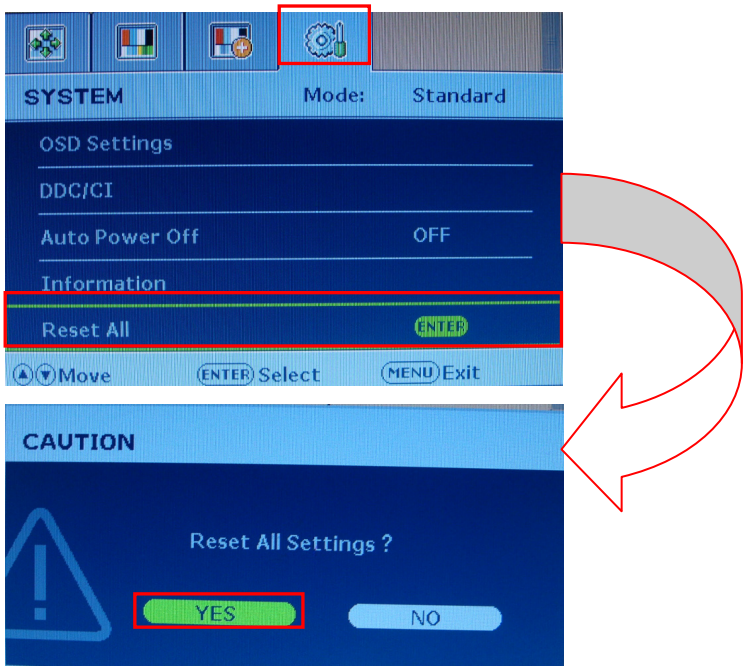

6. Troubleshooting.

Can’t Entry ISP Mode!!

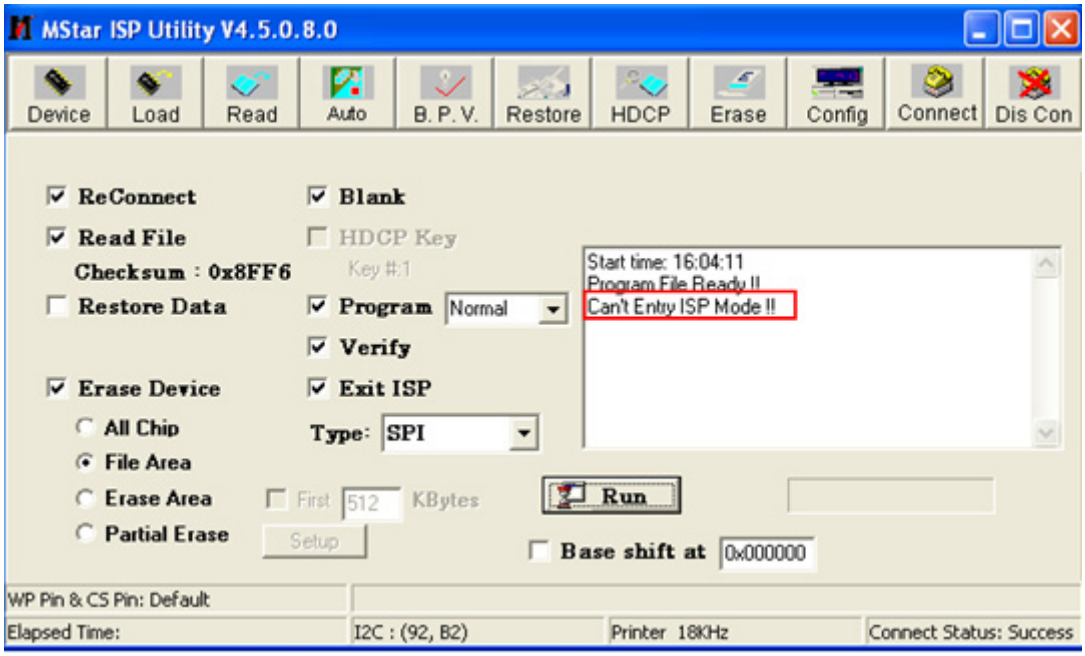

(1) Check the cables and ISP JIG are connected fluently.

(2) Click the “Dis Con” and click “Connect” again.

(3) AC off the monitor for a while and retry it.

(4)Change ISP JIG or cable.

(5)Change PC.

Adjustment / Alignment Procedure

The Control Panel

Note: The audio just for G950AM/GL950AM.

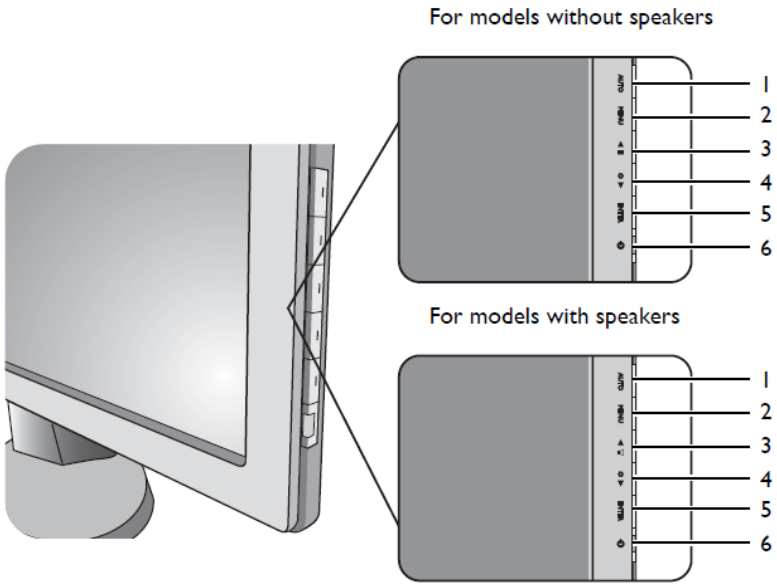

1. **AUTO**: Adjusts vertical position, phase, horizontal position and pixel clock automatically.
2. **MENU** key: Activates OSD main menu and return to the previous menu or exit OSD.
3. ▲/**Display Mode** key (for G950A/GL950A): For Up/Increase adjustment. The key is the hot key for Display Mode.
   ▼/**Volume** key (for G950AM/GL950AM): For Up/Increase adjustment. The key is the hot key for Volume.
4. ▼ /**Mode** key: For Down/Decrease adjustment. The key is the hot key for Mode.
5. **ENTER** key: Enters sub menus and select items.
6. **Power**: Turns the power on or off.

OSD = On Screen Display.

The hot keys will display a graduated scale for adjusting the value of that setting, and will only operate while the OSD menu is not currently displaying. Hot key displays will disappear after a few seconds of no key activity.

Hot key mode

The monitor keys perform as hot keys to provide direct access to particular functions whenever the menu isn't currently displaying on-screen.

Display Mode hot key (for G950A/GL950A)

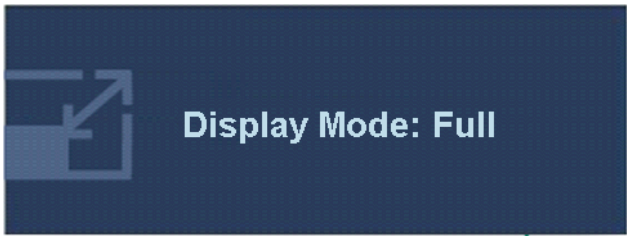

Press the ▲ key continually to switch between **Full** and **Aspect**. The setting will take effect immediately.

Volume hot key (for G950AM/GL950AM)

Press the ▲ key to display the **Volume** indicators. Further press the ▲ key will increase the volume, while the ▼ key will decrease the volume.

To Mute, press the Volume hot key for 3 seconds. To release Mute, press the Volume hot key for 3 more seconds.

Mode hot key

Press the ▼ key continually to switch between the 6 modes for the main window, including **Standard**, **Movie**, **Game**, **Photo**, **sRGB,** and **Eco**. The setting will take effect immediately.

Input hot key (not available for analog-only models)

Press the **ENTER** key to toggle between different PC video signal inputs that may be connected to your monitor. The setting will take effect immediately. The setting will take effect immediately. The setting will take effect immediately.

Main Menu Mode

You can use the OSD (On Screen Display) menu to adjust all the settings on your monitor. Available menu options may vary depending on the input sources, functions and settings. Menu options that are not available will become grayed out.

Press the **MENU** key to display the following main OSD menu.

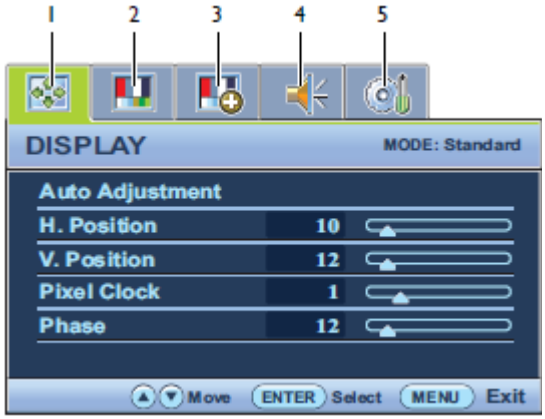

Depending on your purchased model, different OSD menus are available.

1. Display
2. Picture
3. Picture Advanced
4. Audio (for G950AM/GL950AM)
5. System

Use the ▲ (up) or ▼ (down) keys to highlight a menu item, and press the **ENTER** key to enter the Menu item settings.

The OSD menu languages may differ from the product supplied to your region,

Display Menu

Available menu options may vary depending on the input sources, functions and settings. Menu options that are not available will become grayed out.

1. Press the **MENU** key to display the main menu.
2. Press the ▲ or ▼ keys to select **DISPLAY** and then press the **ENTER** key to enter the menu.
3. Press the ▲ or ▼ keys to move the highlight to a menu item and then press the **ENTER** key to select that item.
4. Press the ▲ or ▼ keys to make adjustments or selections.
5. To return to the previous menu, press the **MENU** button.

Item	Function	Operation	Range
Auto Adjustment	Optimizes and adjusts the screen settings automatically for you. The **AUTO** key is a 'hot key' for this function.	Press the **ENTER** key to select this option and make adjustment.	
H. Position	Adjusts the horizontal position of the screen image.	Press ▲ or ▼ keys to adjust the value.	0 to 100
V. Position	Adjusts the vertical position of the screen image.		0 to 100
Pixel Clock	Adjusts the pixel clock frequency timing to synchronize with the analog input video signal. Not applicable to a digital input signal.		0 to 100
Phase	Adjusts the pixel clock phase timing to synchronize with the analog input video signal. Not applicable to a digital input signal.		0 to 63

Picture Menu

Available menu options may vary depending on the input sources, functions and settings. Menu options that are not available will become grayed out.

1. Press the **MENU** key to display the main menu.
2. Press the ▲ or ▼ keys to select **PICTURE** and then press the **ENTER** key to enter the menu.
3. Press the ▲ or ▼ keys to move the highlight to a menu item and then press the **ENTER** key to select that item.
4. Press the ▲ or ▼ keys to make adjustments or selections.
5. To return to the previous menu, press the **MENU** button.

Item	Function	Operation	Range
Brightness	Adjusts the balance between light and dark shades.	Press the ▲ key to increase the brightness and press the ▼ key to decrease the brightness.	0 to 100
Contrast	Adjusts the degree of difference between darkness and lightness.	Press the ▲ key to increase the contrast and press the ▼ key to decrease the contrast.	0 to 100
Sharpness	Adjusts the clarity and visibility of the edges of the subjects in the image.	Press the ▲ key to improve the crispness of the display and press the ▼ key to have softness effect on the display.	1 to 5
Gamma	Adjusts the tone luminance. The default value is 3 (the standard value for Windows).	Press the ▲ key to increase the gamma value (Tone becomes darker) and press the▼ key to decrease the gamma value	1~ 5

		(tone becomes lighter).	
Color - Press **ENTER** to enter the **Color** menu.			
Color Temperature	Normal: Allows video and still photographs to be viewed with natural coloring. This is the factory default color.	Press the ▲ or ▼ keys to select this option.	
	Bluish: Applies a cool tint to the image and is factory pre-set to the PC industry standard white color.		
	Reddish: Applies a warm tint to the image and is factory pre-set to the news print standard white color.		
	User Mode: The blend of the Red, Green and Blue primary colors can be altered to change the color tint of the image. Go to the succeeding **Red**, **Green**, and **Blue** menus to change the settings.	Press the ▲ or ▼ keys and the **ENTER** key to select **Red**, **Green**, or **Blue**. Then use the ▲ or ▼ keys to make the color adjustments.	
Red	Tailors the image color tint. Decreasing one or more of the colors will reduce their respective influence on the color tint of the image. (e.g. if you reduce the Blue level the image will gradually take on a yellowish tint. If you reduce Green, the image will become a magenta tint.)	Press the ▲ or ▼ keys to adjust the value.	0 to 100
Green			
Blue			
Hue	Adjusts the degree of how we perceive colors.	Press the ▲ or ▼ keys to adjust the value.	0 to 100
Saturation	Adjusts the purity degree of colors.	Press the ▲ or ▼ keys to adjust the value.	0 to 100
Reset Color	Resets the custom color settings to the factory defaults.	Press the ▲ or ▼ keys to change the settings.	• YES • NO
Press **MENU** to leave the Color menu.			

Picture Advanced Menu

Available menu options may vary depending on the input sources, functions and settings. Menu options that are not available will become grayed out.

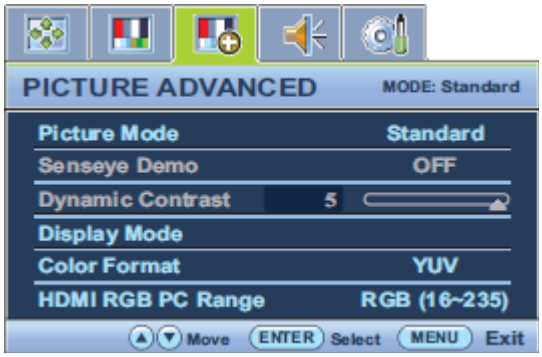

1. Press the **MENU** key to display the main menu.
2. Press the ▲ or ▼ keys to select **PICTURE ADVANCED** and then press the ENTER key to enter the menu.
3. Press the ▲ or ▼ keys to move the highlight to a menu item and then press the **ENTER** key to select that item.
4. Press the ▲ or ▼ keys to make adjustments or selections.
5. To return to the previous menu, press the **MENU** button.

Item	Function	Operation	Range
Picture Mode	Selects a picture mode that best suits the type of images shown on the screen. • Standard - for basic PC application. • Movie - for viewing videos. • Game - for playing video games. • Photo - for viewing still images. • sRGB - for better color matching representation with the peripheral devices, such as printers, DSCs, etc. • Eco - for saving electricity with low power consumption by providing minimum brightness for all running programs.	Press ▲ or ▼ keys to change the settings.	• Standard • Movie • Game • Photo • sRGB • Eco
Senseye Demo	Displays the preview of screen images under the selected mode from Picture Mode. The screen will be divided into two windows; the left window demonstrates images of Standard mode, while the right window presents the images under the specified mode.	Press▲ or ▼ keys to change the settings.	ON OFF
Dynamic Contrast	The function is to automatically detect the distribution of an input visual signal, and then to create the optimal contrast.	Press the **ENTER** key to select this option. Press the ▲ or ▼ keys to change the settings.	0 to 5

Display Mode	This feature is provided to allow aspect ratios other than 16:9 to be displayed without geometric distortion. • Overscan – Slightly enlarges the input image. Use this feature to hide annoying edge noise if present around your image. • Full - Scales the input image to fill the screen. Ideal for 16:9 aspect images. • Aspect - The input image is displayed without geometric distortion filling as much of the display as possible. Depending on the purchased model, 16:9 images will fill the screen horizontally while 4:3 images will fill the screen vertically. ☞To find out the monitor aspect ratio of the purchased model, please check the Specification document on the provided CD.	Press the ▲ or ▼ keys to change the settings. ☞The options under Display Mode will be different depending on the input signal sources.	• Overscan • Full • Aspect
Color Format	Determines the color space (RGB or YUV) based on the following detected video signal: • D-Sub (VGA) from PC: The default Color Format is RGB. • D-Sub (Component) from a video device: The default Color Format is YUV. ☞You might need to manually set the Color Format if colors shown on the monitor screen do not display properly.	Press the **ENTER** key to select this option. Press the ▲ or ▼ keys to change the settings.	• RGB • YUV

Audio menu

Note: Just for GL950AM/G950AM

Available menu options may vary depending on the input sources, functions and settings. Menu options that are not available will become grayed out.

1. Press the **MENU** key to display the main menu.
2. Press the ▲ or ▼ keys to select **AUDIO** and then press the **ENTER** key to enter the menu.

3. Press the ▲ or ▼ keys to move the highlight to a menu item and then press the **ENTER** key to select that item.
4. Press the ▲ or ▼ keys to make adjustments or selections.
5. To return to the previous menu, press the **MENU** button.

Item	Function	Operation	Range
Volume	Adjusts the audio volume	Press the ▲ key to increase the volume and press the ▼ key to decrease the volume.	0 ~ 100
Mute	Mutes the audio input	Press the ▲ or ▼ keys to change the settings.	• ON • OFF

System menu

Available menu options may vary depending on the input sources, functions and settings. Menu options that are not available will become grayed out.

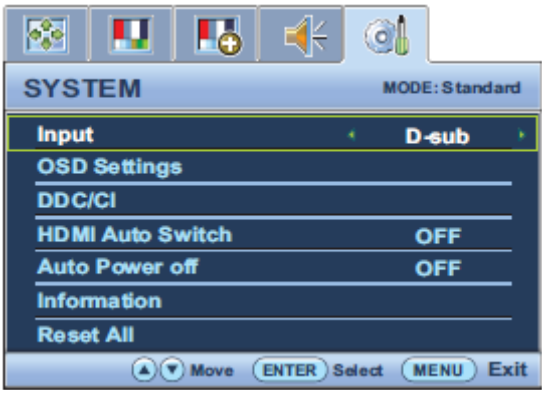

1. Press the **MENU** key to display the main menu.
2. Press the ▲ or ▼ keys to select **SYSTEM** and then press the **ENTER** key to enter the menu.
3. Press the ▲ or ▼ keys to move the highlight to a menu item and then press the **ENTER** key to select that item.
4. Press the ▲ or ▼ keys to make adjustments or selections.
5. To return to the previous menu, press the **MENU** button.

Item	Function	Operation	Range
Input	Use this to change the input to that appropriate to your video cable connection type. ☞Analog-only models do not have the Input function.	Press ▲ or ▼ keys to change the setting.	• D-sub (VGA)
OSD Settings - Press **ENTER** to enter the **OSD Settings** menu.			
Language	Sets the OSD menu Language.	Press ▲ or ▼ keys to change the settings.	• English • French • German

		☞ The language options displayed on your OSD may differ from those shown on the right, depending on the product supplied in your region.	• Italian • Spanish • Polish • Japanese • Czech • Traditional Chinese • Hungarian • Simplified Chinese • Serbo-Croatian • Romanian • Dutch • Russian • Swedish • Portuguese
H. Position	Adjusts the horizontal position of the OSD menu.	Press ▲ or ▼ keys to change the settings.	0 to 100
V. Position	Adjusts the vertical position of the OSD menu.		0 to 100
Display Time	Adjusts the display time of the OSD menu.		5 / 10 / 15 / 20 / 25 / 30 sec
OSD Lock	Prevents all the monitor settings from being accidentally changed. When this function is activated, the OSD controls and hotkey operations will be disabled.	Press ▲ or ▼ keys to change the settings. ☞ To unlock the OSD controls when the OSD is preset to be locked, press and hold the **MENU** key for 15 seconds to enter the **OSD Lock** option and make changes. Alternatively, you may use the ▲ or ▼ keys to select **NO** in the **OSD Lock** submenu from the **OSD Settings** menu, and all OSD controls will be accessible.	YES NO
Press **MENU** to leave the **OSD Settings** menu.			
DDC/CI*	Allows the monitor settings to be set through the software on the PC.	Press the **ENTER** key to select this option. Press the ▲ or ▼ keys to change the settings.	ON OFF
Auto Power off	Sets the time to power off the monitor automatically in power	Press the **ENTER** key to select this option. Press the ▲ or ▼ keys	• OFF • 10min.

	saving mode.	to change the settings.	• 20min. • 30min.
Information	Displays the current monitor property settings.		• Input • Current Resolution • Optimum Resolution (best with the monitor) • Model Name
Reset All	Resets all mode, color and geometry settings to the factory default values.	Press ▲ or ▼ keys to change the settings.	YES NO

*DDC/CI, short for Display Data Channel/Command Interface, which was developed by Video Electronics Standards Association (VESA). DDC/CI capability allows monitor controls to be sent via the software for remote diagnostics.

Display Timing Table

Note:

P: Preset Mode

NP: None Preset Mode

FS: Fail Save Mode (show “out of range”, but still can see picture)

O: Out of Range (only show “out of range”, without picture)

BenQ Preferred Mode Number	1366x768	1440x900	1600x900	1680x1050	1920x1080	Resolution	Pixel clock (unit: MHz)	H-sync (unit: kHz)	V-sync (unit: Hz)
IDF-1	P	P	P	P	P	640x350	25.18	31.47	70.09
	FS	FS	FS	FS	FS	640x350	31.50	37.86	85.08
	NP	NP	NP	NP	NP	640x400	25.18	31.47	70.09
	FS	FS	FS	FS	FS	640x400	31.5	37.86	85.08
	NP	NP	NP	NP	NP	640x480	30.24	35.00	66.67
DMT-1	P	P	P	P	P	640x480	25.17	31.47	59.94
	NP	NP	NP	NP	NP	640x480	31.50	37.86	72.8
DMT-2	P	P	P	P	P	640x480	31.50	37.50	75.00
DMT-3	FS	FS	FS	FS	FS	640x480	36.00	43.27	85.01
	NP	NP	NP	NP	NP	640x500	25.25	31.00	57.76
IDF-2	P	P	P	P	P	720x400	28.32	31.47	70.08
	FS	FS	FS	FS	FS	720x400	35.5	37.93	85.04
	P	P	P	P	P	832x624	57.27	49.71	74.53
BenQ	NP	NP	NP	NP	NP	800x480	29.5	29.74	59.476
	NP	NP	NP	NP	NP	800x600	36.00	35.16	56.25
DMT-4	P	P	P	P	P	800x600	40.00	37.88	60.32
	NP	NP	NP	NP	NP	800x600	50.00	48.08	72.19
DMT-5	P	P	P	P	P	800x600	49.50	46.88	75.00
DMT-6	FS	FS	FS	FS	FS	800x600	56.25	53.67	85.06
DMT-26	NP	NP	NP	NP	NP	848x480	33.75	31.02	60.00
	NP	NP	NP	NP	NP	848x480	31.50	29.83	59.66
	NP	NP	NP	NP	NP	848x480	37.52	35.00	70.00
	NP	NP	NP	NP	NP	848x480	39.25	36.07	72.00
	NP	NP	NP	NP	NP	848x480	41.00	37.68	74.77
	NP	NP	NP	NP	NP	720x576	32.71	35.910	59.950
BenQ	P	P	P	P	P	1024x576	46.966	35.82	60
BenQ	P	P	P	P	P	1024x600	48.964	37.32	60
	FS	FS	FS	FS	FS	1024x768-I	44.9	35.52	43.48
DMT-7	P	P	P	P	P	1024x768	65.00	48.36	60.00
	NP	NP	NP	NP	NP	1024x768	75.00	56.48	70.07

	NP	NP	NP	NP	NP	1024x768	78.43	57.67	72.00
	P	P	P	P	P	1024x768	80.00	60.24	74.93
DMT-8	P	P	P	P	P	1024x768	78.75	60.02	75.03
DMT-9	FS	FS	FS	FS	FS	1024x768	94.50	68.68	85.00
DTV	P	P	P	P	P	1152x720	66.75	44.86	60
	NP	NP	NP	NP	NP	1152x864	94.50	63.85	70.01
DMT-10	P	P	P	P	P	1152x864	108.00	67.50	75.00
GTF-7	FS	FS	FS	FS	FS	1152x864	119.651	77.09	85.00
	P	P	P	P	P	1152x870	100.00	68.68	75.06
	P	P	P	P	P	1152x900	92.94	61.80	65.95
	NP	NP	NP	NP	NP	1152x900	105.59	71.73	76.07
	P	P	P	P	P	1280x720	74.25	45.00	59.94
CVT-7	P	P	P	P	P	1280x720	74.50	44.77	59.86
	P	P	P	P	P	1280x720	95.75	56.46	74.78
	P	P	P	P	P	1280x768-R	68.25	47.40	60.00
DMT-20	NP	NP	NP	NP	NP	1280x768	79.50	47.78	59.87
	NP	NP	NP	NP	NP	1280x768	102.25	60.29	74.89
	FS	FS	FS	FS	FS	1280x768	117.50	68.63	84.84
	NP	NP	NP	NP	NP	1280x800	71	49.31	59.91
CVT-8	P	P	P	P	P	1280x800	83.50	49.702	59.81
GTF	NP	NP	NP	NP	NP	1280x800	98.894	58.3	70
	NP	NP	NP	NP	NP	1280x800	102.8	60.048	72
	P	P	P	P	P	1280x800	106.6	62.795	74.934
	FS	FS	FS	FS	FS	1280x800	122.5	71.55	84.88
	P	P	P	P	P	1280x960	108.00	60.00	60.00
	FS	FS	FS	FS	FS	1280x960	148.50	85.94	85.00
DMT-11	P	P	P	P	P	1280x1024	108.00	63.98	60.02
	FS	NP	NP	NP	NP	1280x1024	126.99	74.88	69.85
	FS	NP	NP	NP	NP	1280x1024	124.90	74.40	70.00
	FS	NP	NP	NP	NP	1280x1024	134.60	77.90	72.00
DMT-12	FS	P	P	P	P	1280x1024	135.00	79.98	75.02
	FS	NP	NP	NP	NP	1280x1024	135.09	81.18	76.16
DMT-13	FS	FS	FS	FS	FS	1280x1024	157.50	91.15	85.02
DMT-21	P	P	P	P	P	1360x768	85.50	47.71	60.01
	P	P	P	P	P	1366x768	85.50	47.71	59.79
	NP	NP	NP	NP	NP	1400x1050-R	101.00	64.74	59.95
DMT-18	NP	NP	NP	NP	NP	1400x1050	121.75	65.32	59.98
	FS	NP	NP	NP	NP	1400x1050	156.00	82.28	74.87
	O	FS	FS	FS	FS	1400x1050	179.50	93.88	84.96
DMT-25	NP	NP	P	P	P	1440x900-R	88.75	55.496	59.901

DMT-25	NP	P	P	P	P	1440x900	106.5	55.935	59.887
	FS	P	P	P	P	1440x900	136.75	70.6	75
	NP	NP	NP	P	P	1600X900-R	97.75	55.54	59.98
	NP	NP	NP	P	P	1600x1000-R	108.5	61.648	59.910
CVT-10	NP	NP	NP	NP	NP	1600x1000	132.25	62.14	59.87
	O	O	FS	NP	NP	1600x1000	169.25	78.356	74.83
CVT-2	FS	FS	FS	NP	NP	1600x1200-R	130.25	74.01	59.92
DMT-14	O	O	FS	P	P	1600x1200	162.00	75.00	60.00
	O	O	O	NP	NP	1600x1200	175.50	81.25	65.00
	O	O	O	NP	NP	1600x1200	189.00	87.50	70.00
DMT-15	O	O	O	NP	NP	1600x1200	202.50	93.75	75.00
DMT-16	O	O	O	O	O	1600x1200	229.50	106.25	85.00
DMT-22	FS	FS	FS	P	NP	1680x1050-R	119.00	64.67	59.88
DMT-23	O	O	FS	P	P	1680x1050	146.25	65.29	59.95
	O	O	FS	P	P	1680x1050	187	82.306	75
CVT2.04M	O	O	FS	NP	NP	1600x1280	171.75	79.5	59.9
CVT2.41M3	O	O	O	FS	FS	1792X1344	203.25	83.57	59.9
CVT2.41M3	O	O	O	O	O	1792X1344	257.75	105.290	75.00
CVT2.58M3	O	O	O	O	O	1856X1392	217.25	86.485	59.934
CVT2.58M3	O	O	O	O	O	1856X1392	277.5	109	74.918
CVT2.59M4	O	O	O	O	O	1800x1440	218.25	89.4	59.9
	NP	NP	NP	NP	P	1920x1080-R	138.5	66.587	59.934
	NP	NP	NP	NP	P	1920x1080	173	67.158	59.963
DMT	NP	NP	NP	NP	P	1920x1080	148.5	67.5	60
	FS	FS	FS	FS	FS	1920X1200-R5	127.750	61.418	49.974
CVT2.30MA-R	O	O	FS	FS	FS	1920X1200-R	154.00	74.04	59.95
	O	O	O	FS	FS	1920X1200	193.25	74.56	59.89
	O	O	O	O	O	1920X1200	245.25	94.04	74.93
CVT2.76M3-R	O	O	O	FS	FS	1920X1440-R	184.75	88.822	59.9
CVT2.76M3	O	O	O	O	O	1920X1440	233.500	89.532	59.968
CVT2.76M4	O	O	O	O	O	1920X1440	298	112.50	74.9
CVT-R	O	O	FS	FS	FS	2048x1152-R	156.75	70.992	59.9
CVT	O	O	O	O	FS	2048x1152	197	71.584	59.9

Factory OSD Menu

The service page needs to include that information: Model name, S/N, Vender, panel, scalar, F/W version, Monitor on time, Backlight on time.

1. Trigger method: Press “Menu” key and Power on.
2. Press the Menu key will display the service page
3. Press menu key will close the service page.
4. Power off will quit the service mode
5. At the service mode, the key function is same as normal OSD define.
6. The timer can only reset at the service mode by “Timer Reset” (Timer Reset moves to SI factory Area). And needs to have a warning message to double confirm the reset function.The timer should record up to 99999 hours and will be reset once launch.
7. Add BenQ logo on/off item, the default is “on”
8. Add the auto power on item, the default is “on”
9. Add the timer reset warning message, when select the timer reset item, then the warning message will display and need to confirm it again and the default is “No”.
10. Panel type define need to have the panel version
11. F/W version need to define the dual or analog model
12. Add “Resolution Notice“ item, the default is “off”

Level 2 Circuit Board and Standard Parts Replacement

Product Exploded View

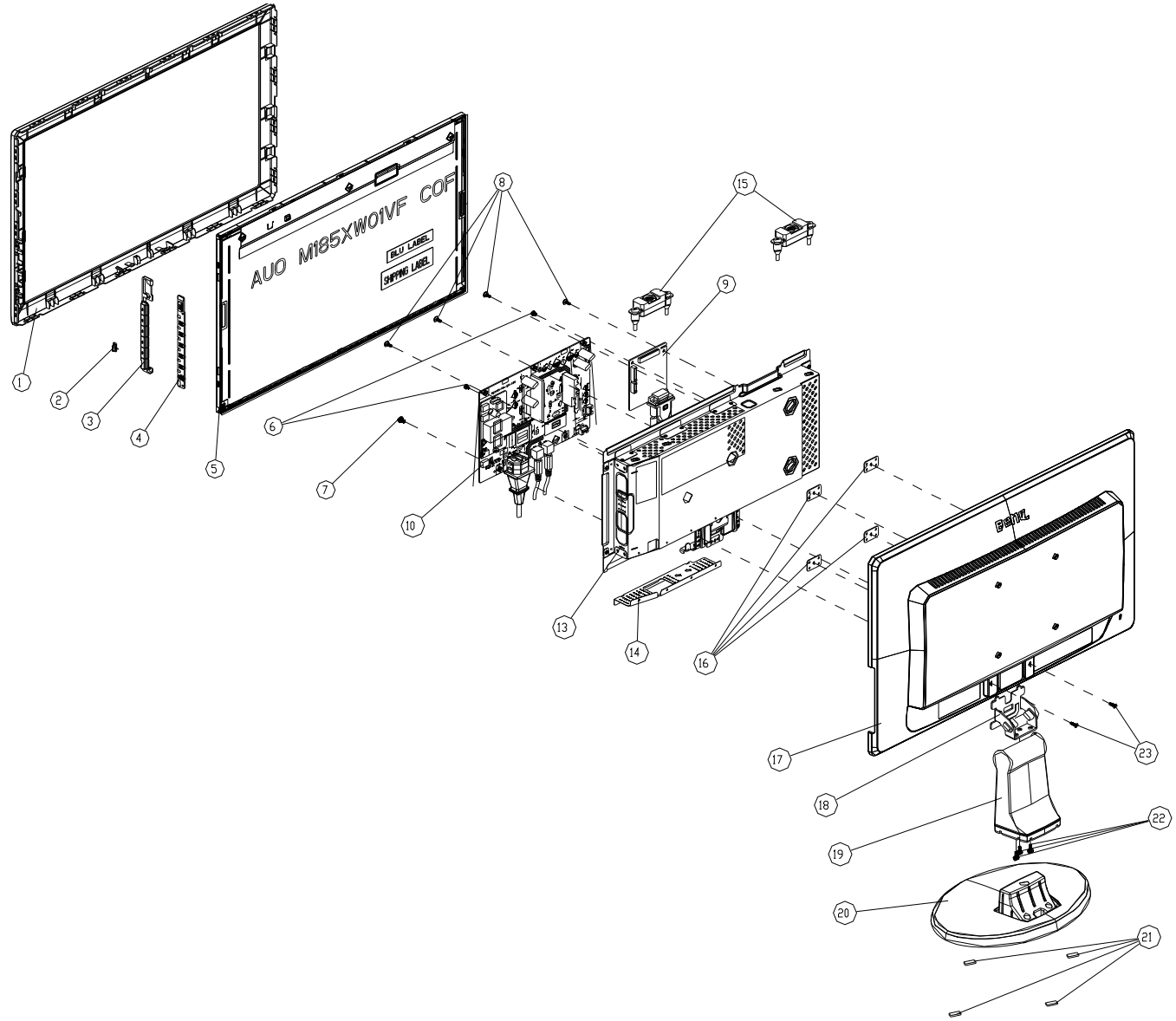

Note: The parts information listed below are for reference only, and are subject to change without notice. Please go to http://cs.tpv.com.cn/hello1.asp for the latest information.

Item	Description	Qty	Unit
1	BEZEL	1	PCS
2	LENS	1	PCS
3	KEY BUTTON	1	PCS
4	KEY BOARD	1	PCS
5	PANEL	1	PCS
9	MAIN BOARD	1	PCS
10	POWER BOARD	1	PCS
13	MAIN_FRAME	1	PCS
14	AC SHIELD	1	PCS

15	SPEAKER (for GL950AM/G950AM)	1	PCS
16	PLATE	4	PCS
17	REAR COVER	1	PCS
18	HINGE	1	PCS
19	STAND	1	PCS
20	BASE	1	PCS
21	FOOT PAD	4	PCS

SCREW				
Item	**Part No.**	**Description**	**Qty**	**Unit**
6	0D1G1030 6120	POWER BOARD & MAINFRAME	2	PCS
7	0M1G1740 8120	POWER BOARD & MAINFRAME	1	PCS
8	0D1G1030 6120	MAIN/POWER BOARD & MAINFRAME	4	PCS
22	AM1G1740 10 47 CR3	STAND & HINGE	3	PCS
23	0M1G 130 12 47 CR3	MAIN FRAME & REAR COVER	2	PCS
ART.				
	Part No.	**Description**	**Qty**	**Unit**
	Q44G9221101	EPS	1	PCS
	Q44G9221201	EPS	1	PCS
	Q44G9221881 5A	CARTON	1	PCS

Six Angles' View

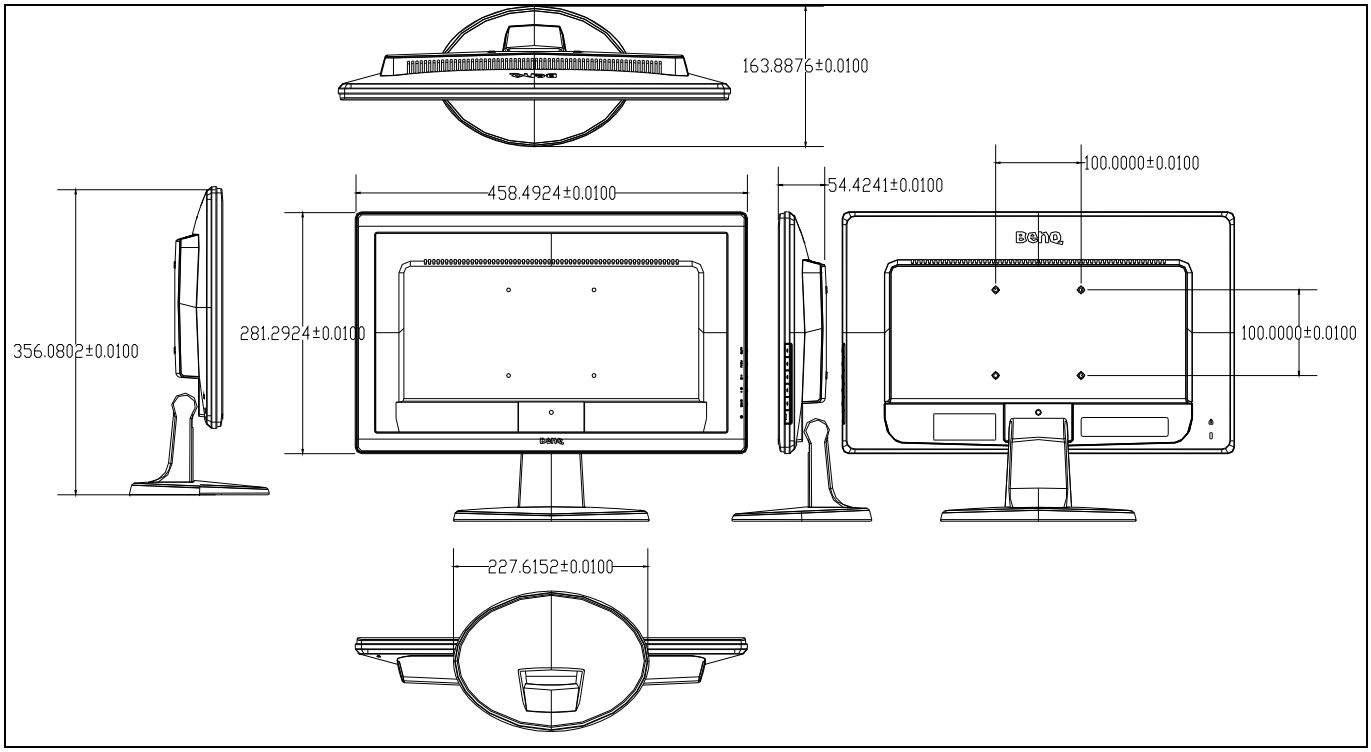

Product Disassembly/Assembly

Note: Take GL950AM for example.

Note: The speaker just for G950AM/GL950AM.

Disassembly

1) Remove the base

Place the monitor face down on a smooth surface. Be careful to avoid scratch and injury during the process of uninstall. And then remove the base.

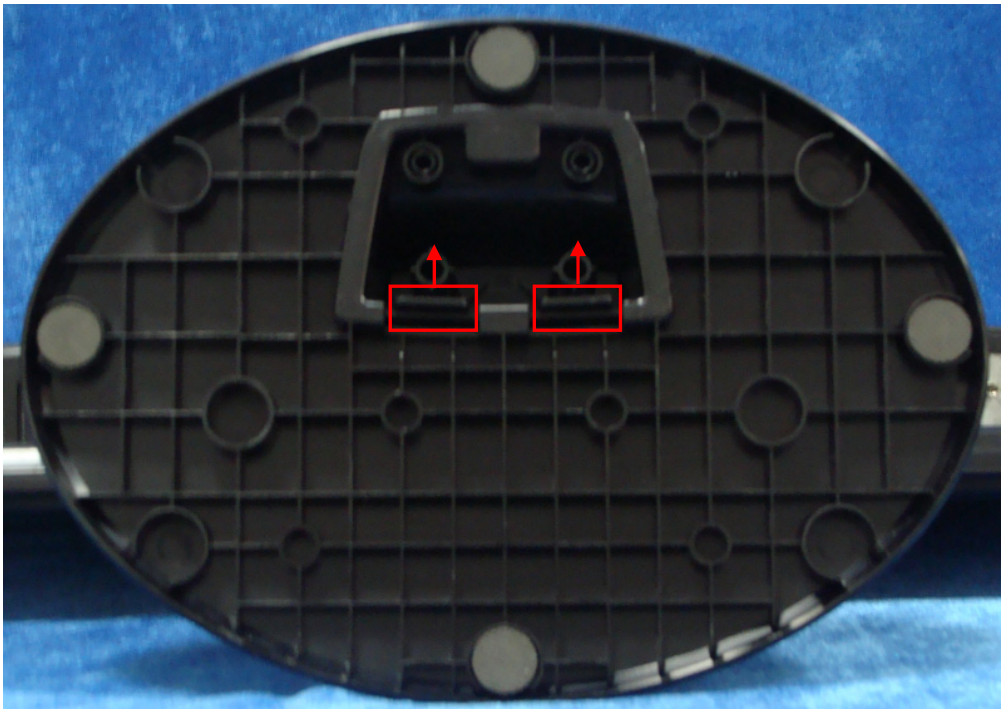

2) Remove the stand.

Press the hole; pull at the stand strongly at the same time.

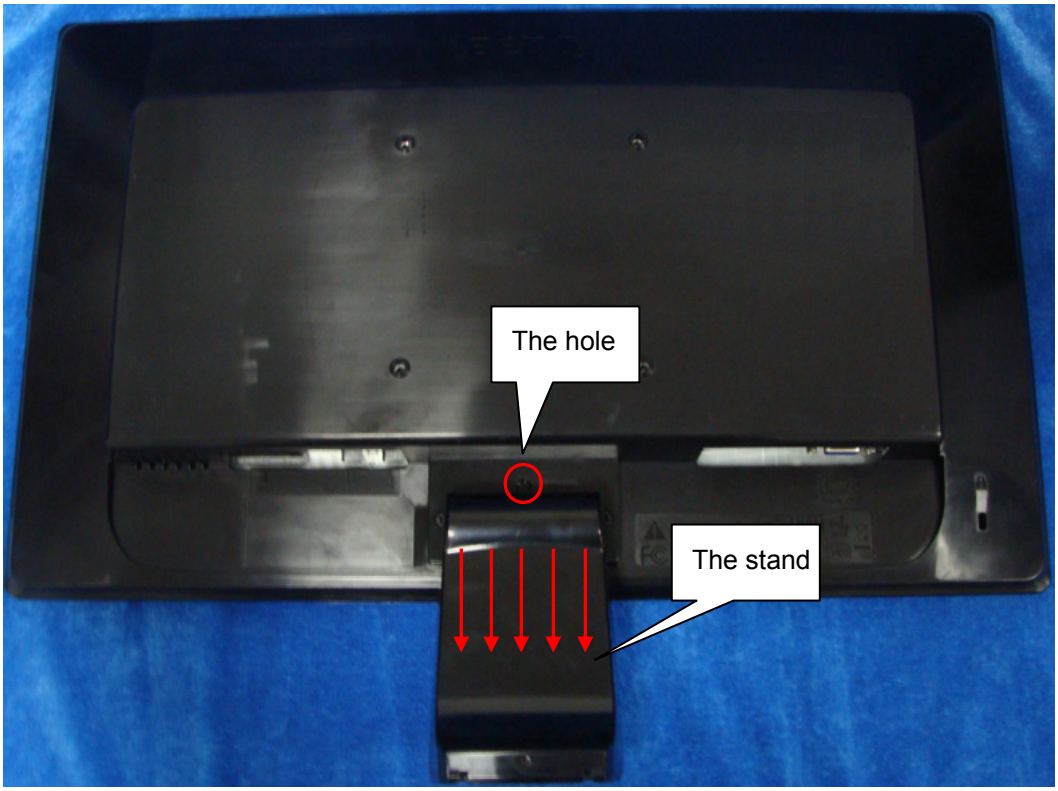

3) Remove the rear cover

Remove screws in red:

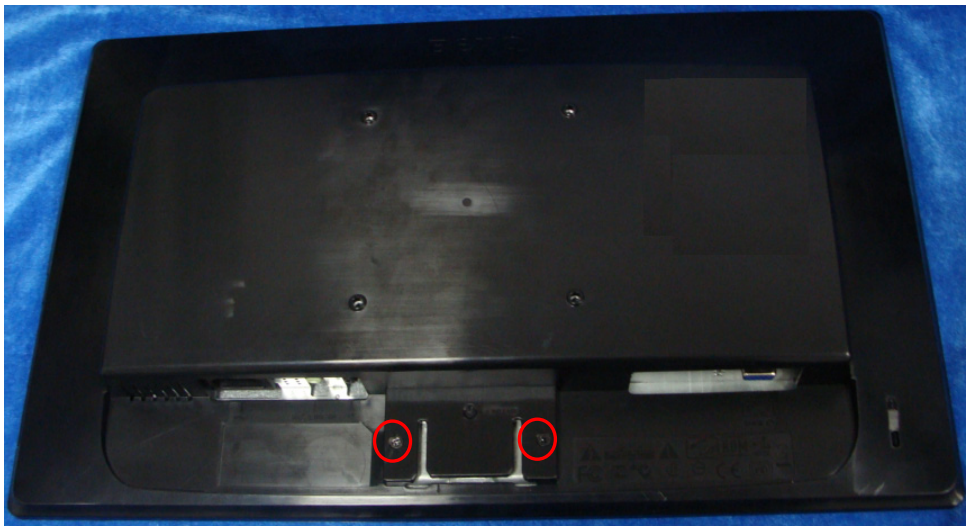

Pull apart bezel & rear cover.

Note: Be careful, the BEZEL CLIP is easy to break.

Note: The positions of the clips on the rear cover are as follow. There are some small gaps between CLIPS. It's suggested to separate bezel and rear cover from the gaps.

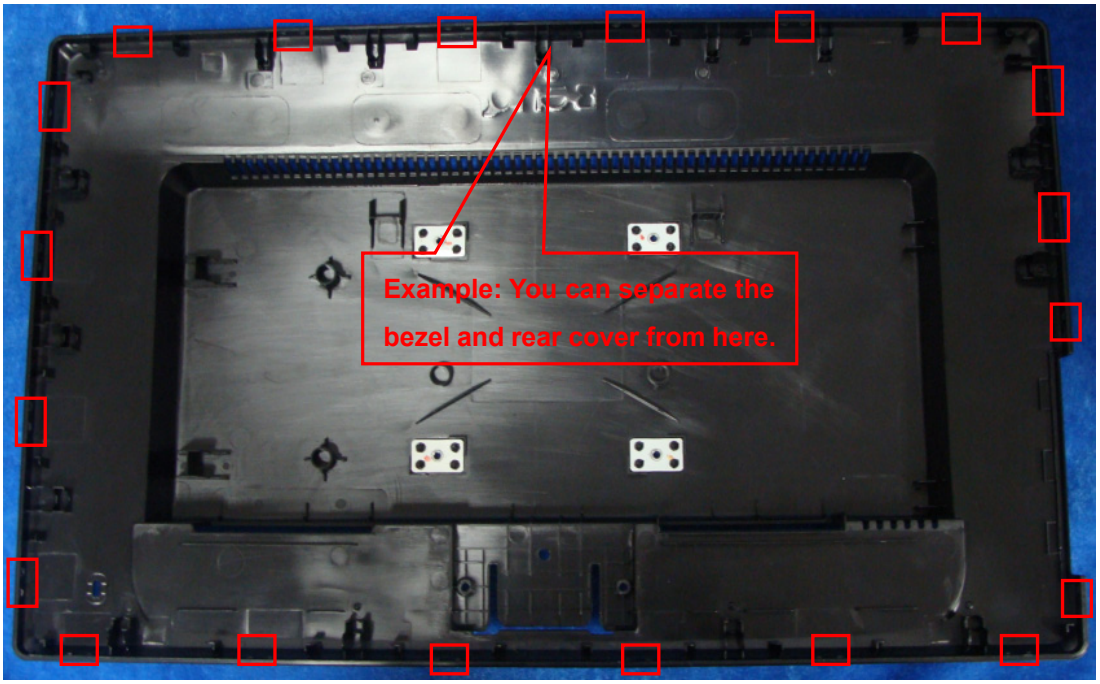

4) Remove the main frame from the panel.

Remove the black rubberized fabric and aluminum foil.

Note: When you assemble the LCD, you must tidy the wire as follow picture.

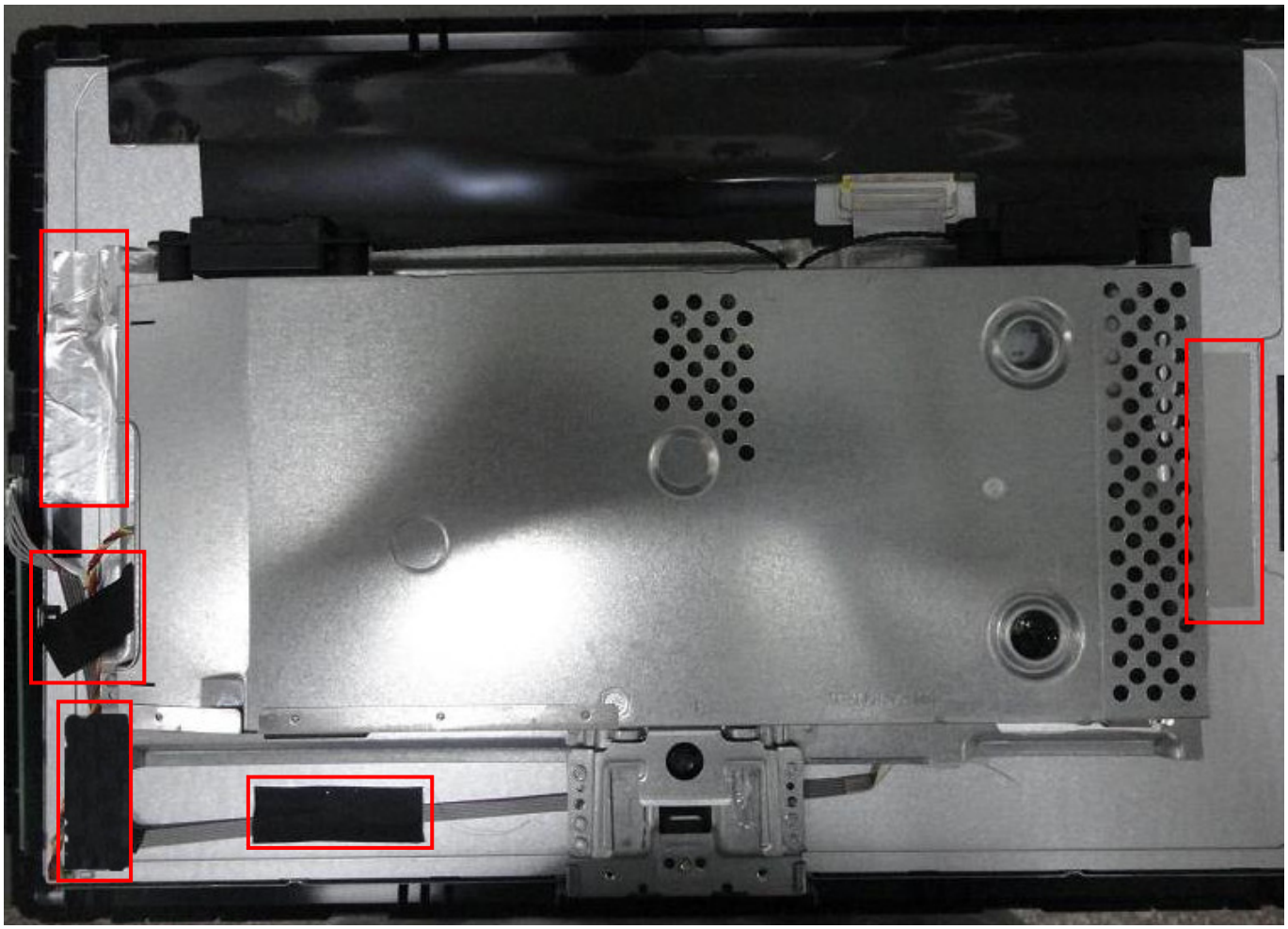

Pull out the wire to remove the mainframe.

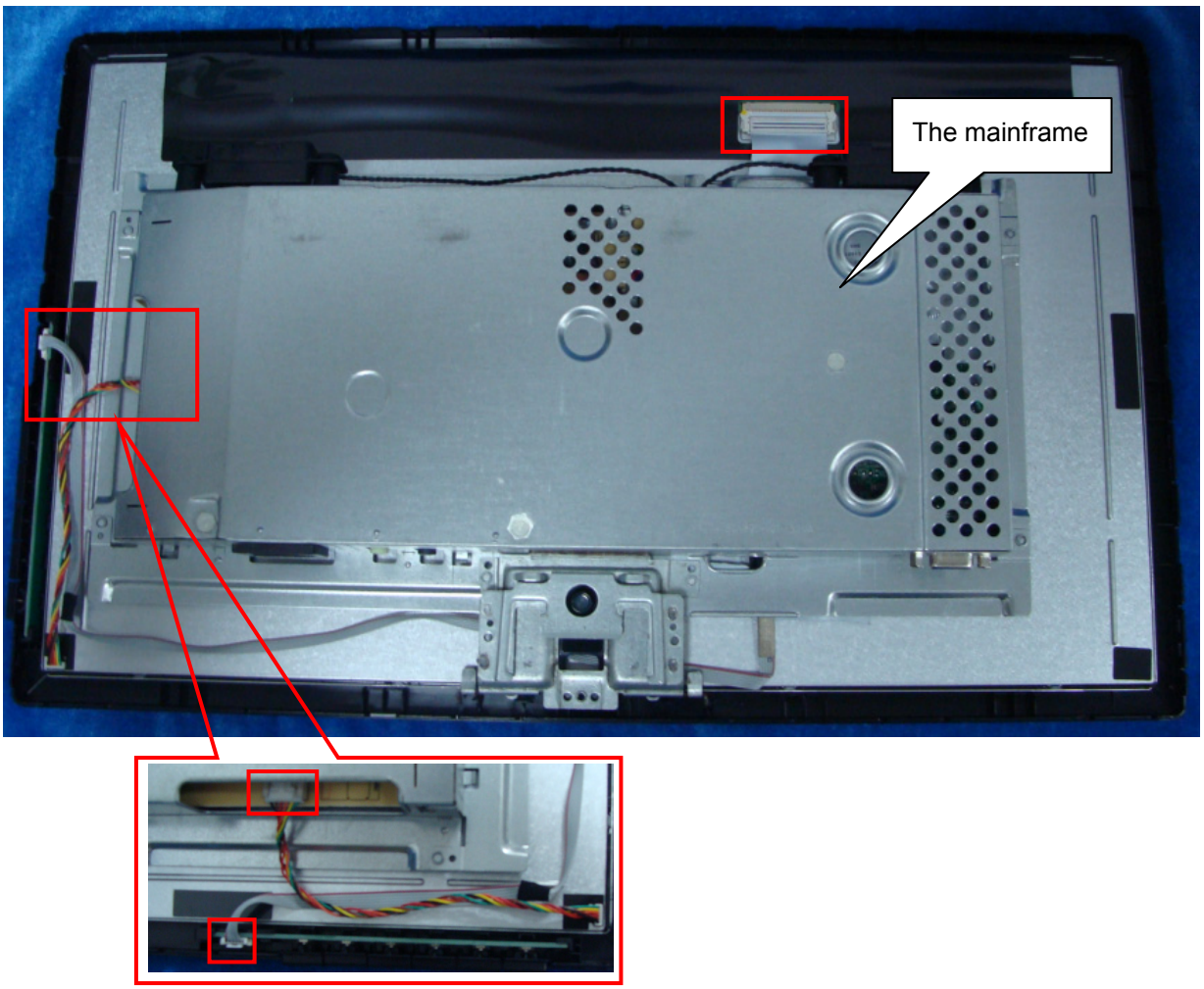

5) Remove the AC cover from the mainframe.

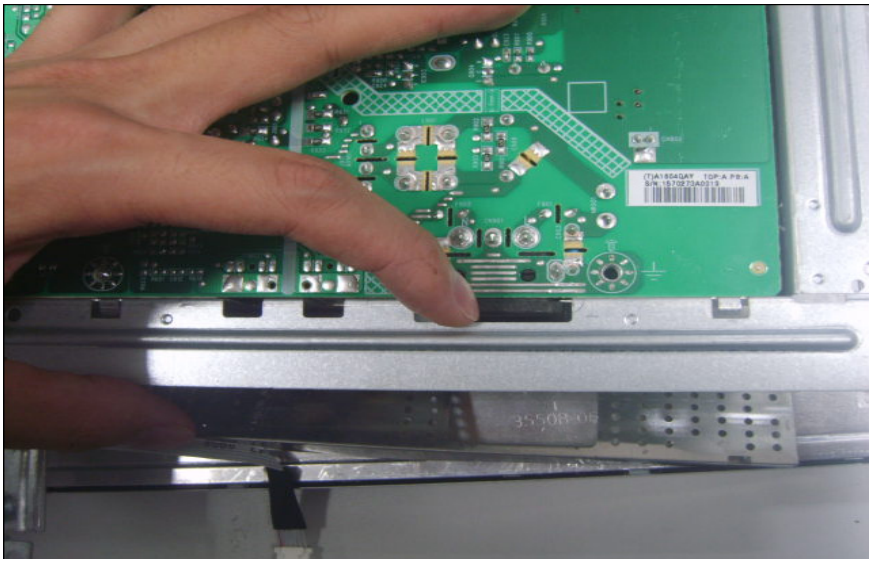

6) Remove the boards from the main frame.

Remove screws in red; remove the black rubberized fabric, and then pull out the wire which connects speaker and power board.

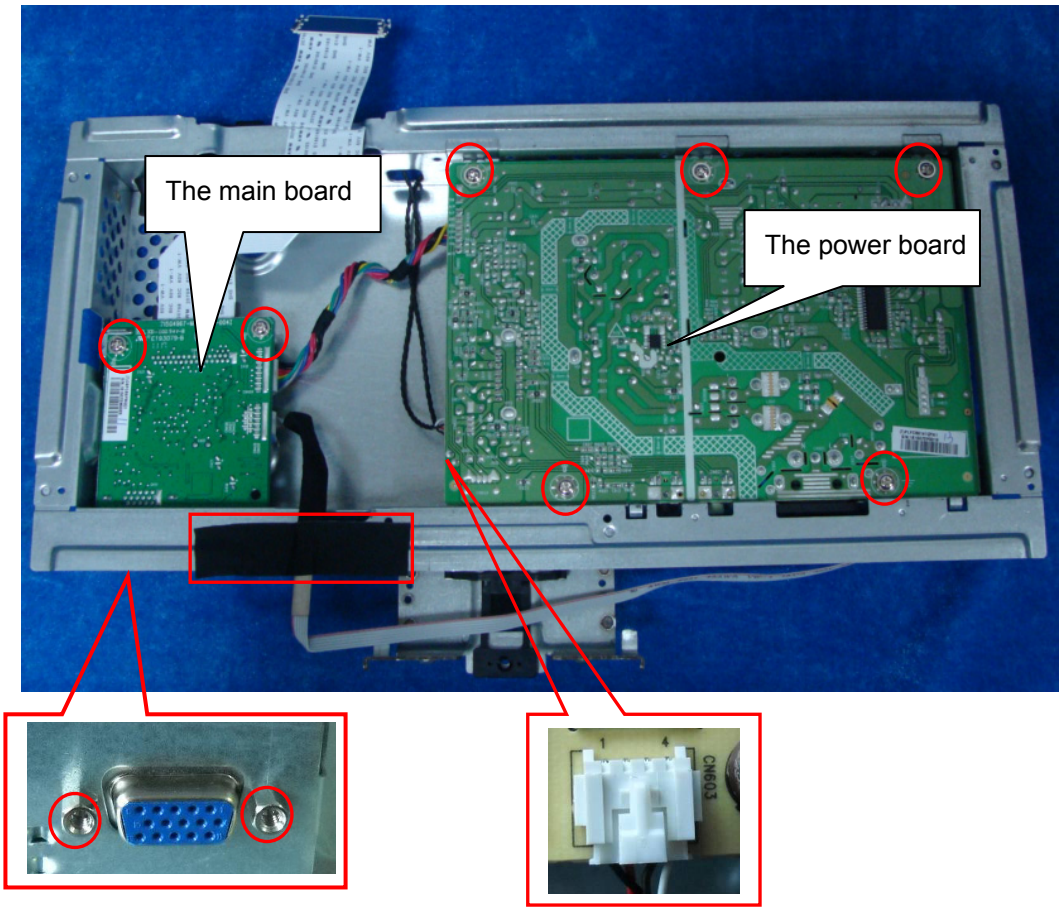

Pull out the wire to remove the main board and power board.

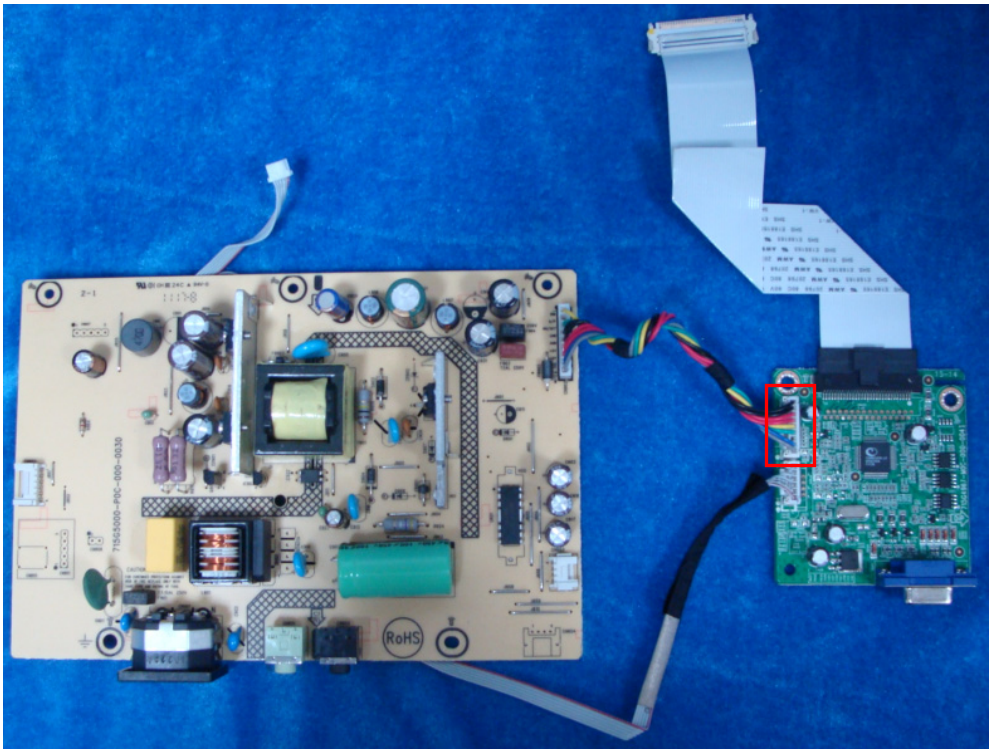

7) Remove the speaker.

Pull at the foot of the speaker strongly as follow picture.

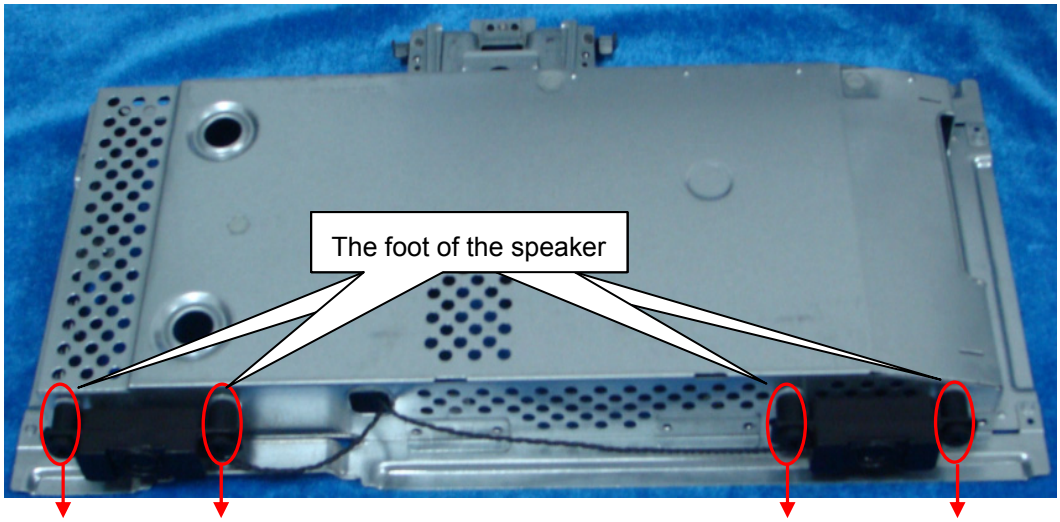

The mainframe

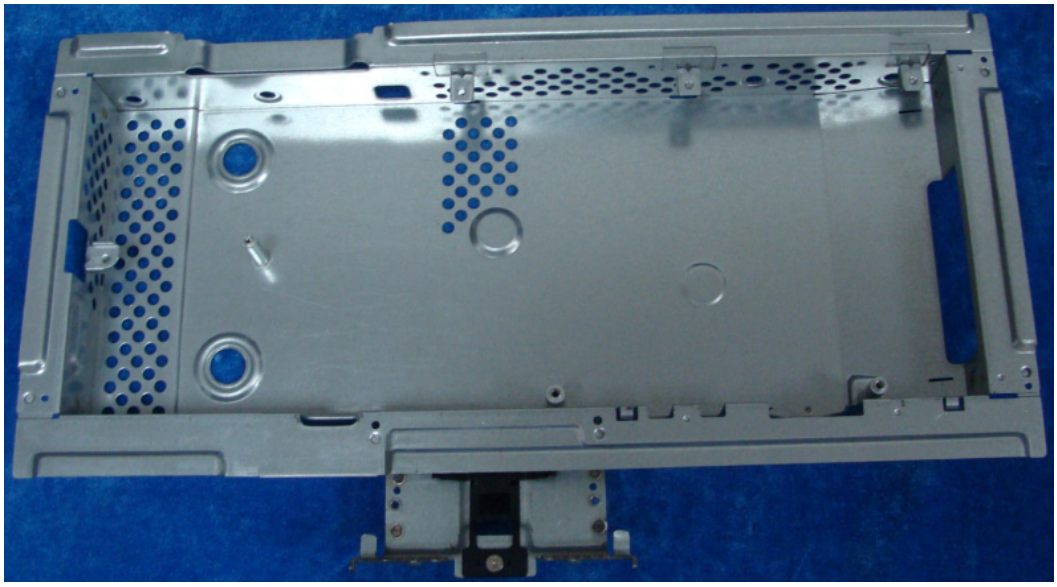

8) The panel

Assembly

1) Assemble the speaker on the main frame.

Pull at the foot of the speaker strongly. The wire of the speaker will be traversed from the middle hole as follow picture. The wire will connect power board and speaker.

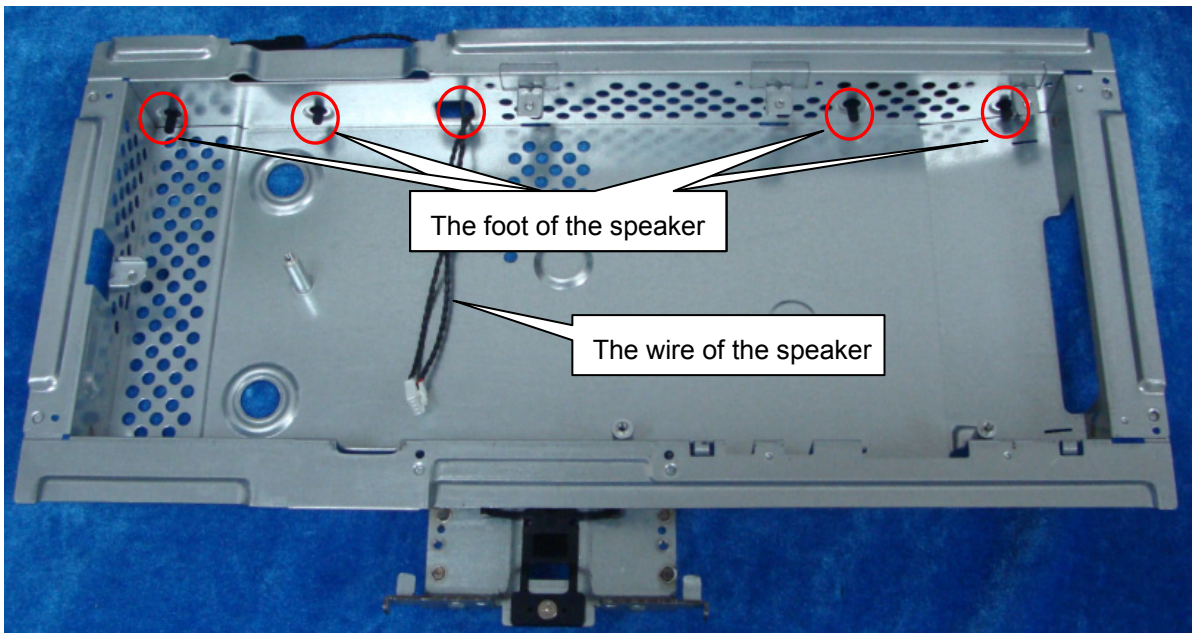

2) Assemble the wire to the main board.

The left wire will connect main board and key board; the right wire will connect main board and panel.

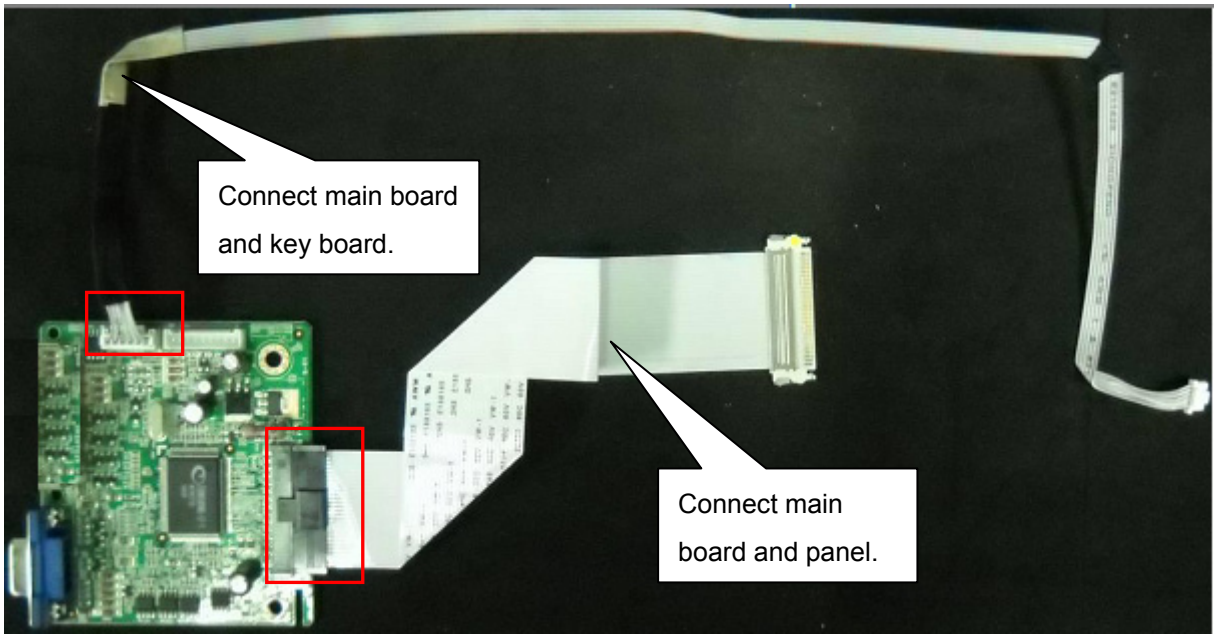

3) Assemble the main board and power board on the main frame.

Connect the main board and power board.

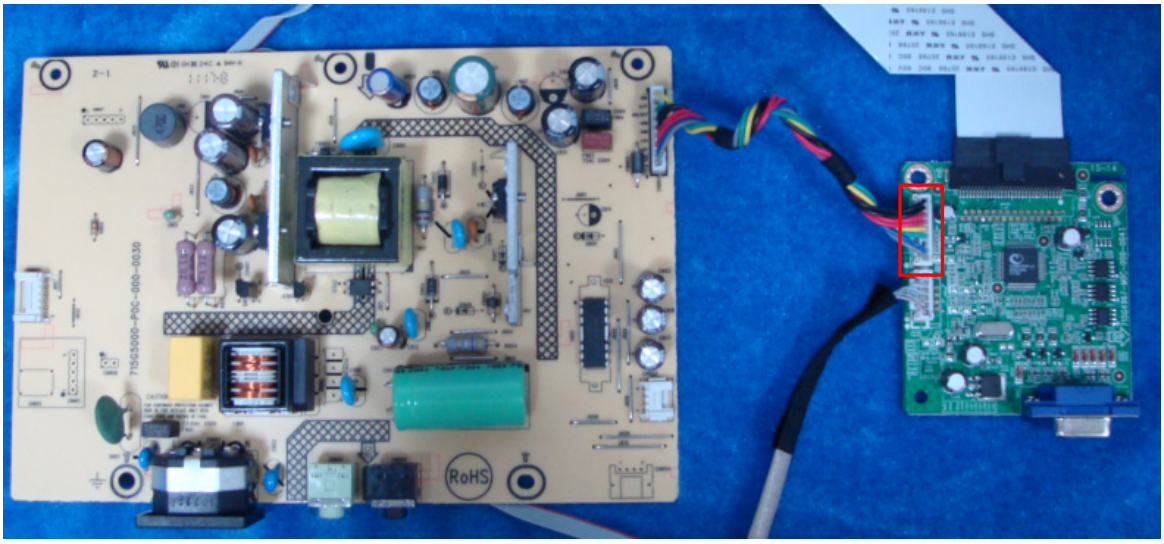

Connect the speaker and power board; lock the main board and power board on the mainframe; stick the black rubberized fabric.

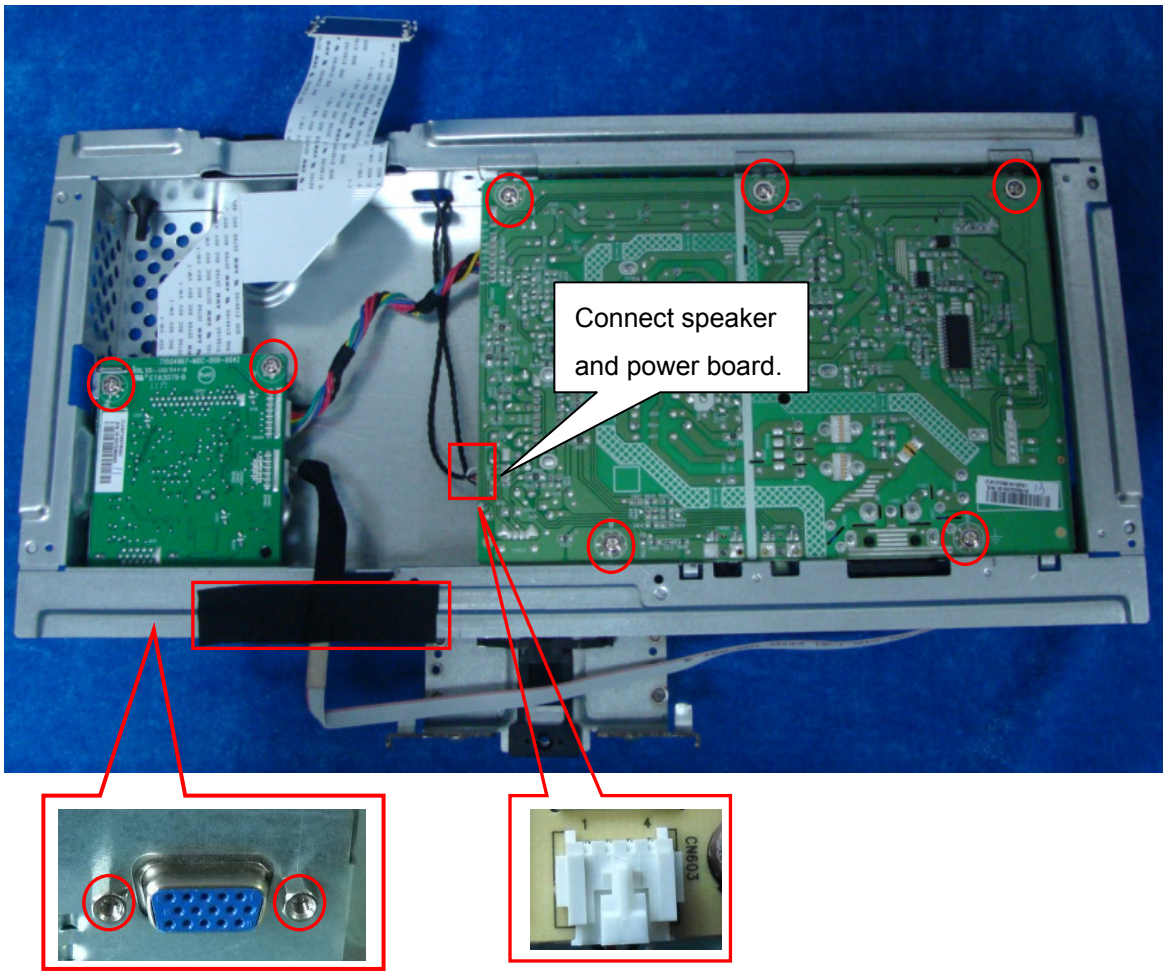

4) Assemble the panel on the bezel.

5) Assemble the main frame and the key board.

Connect key board and main board, panel and power board, panel and main board.

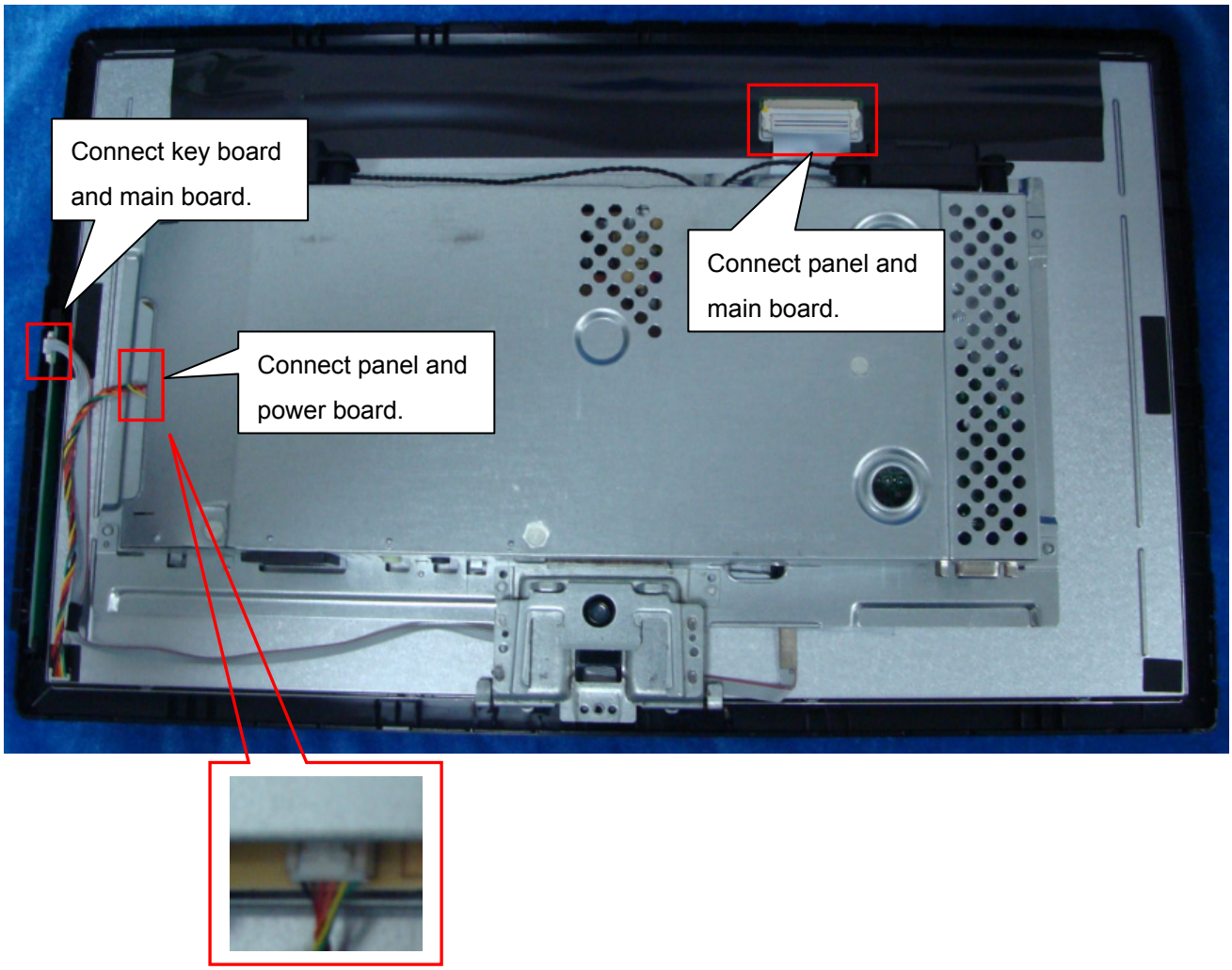

Stick the black rubberized fabric and aluminum foil to tidy the wire.

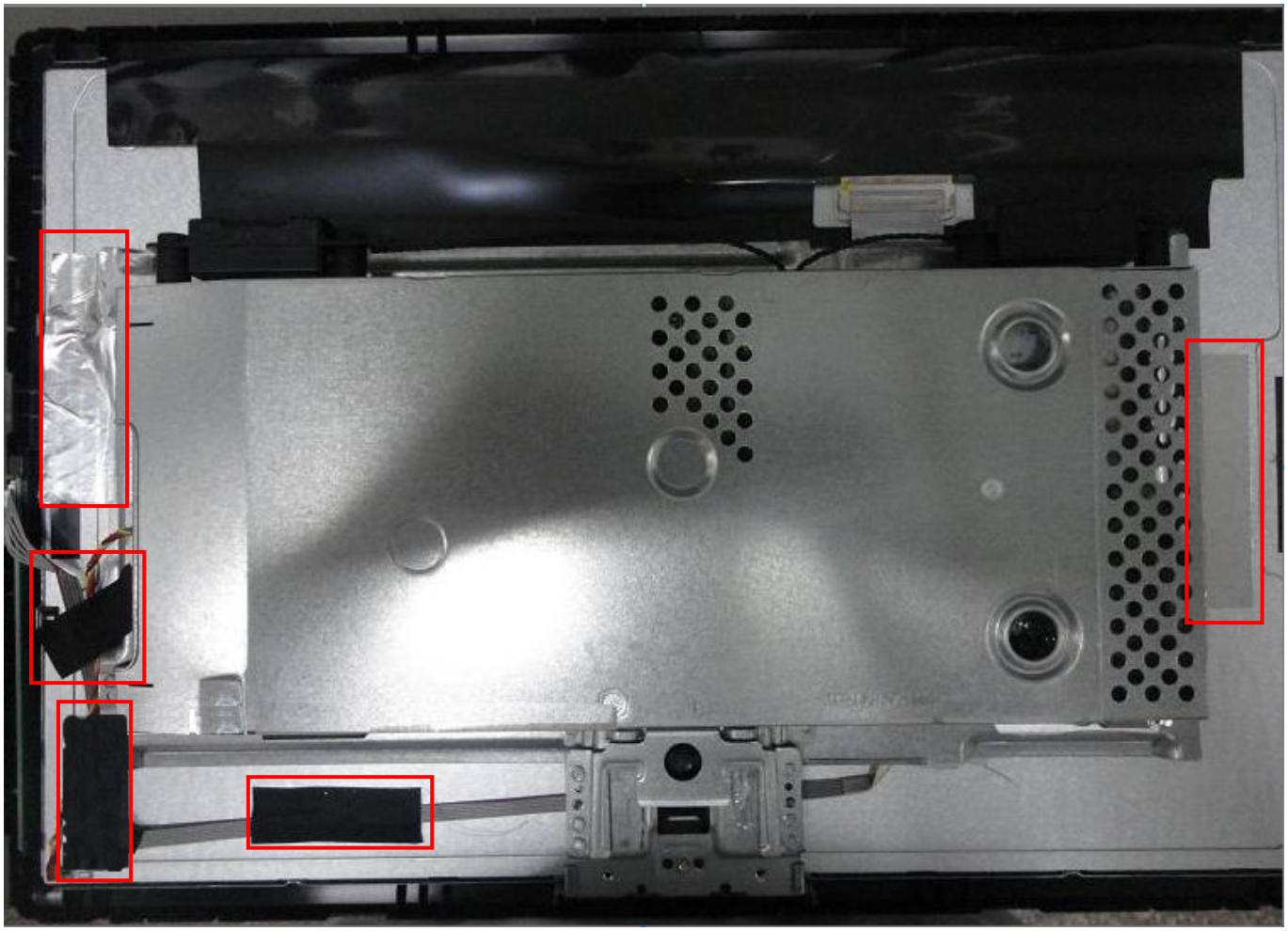

6) Assemble the AC-COVER.

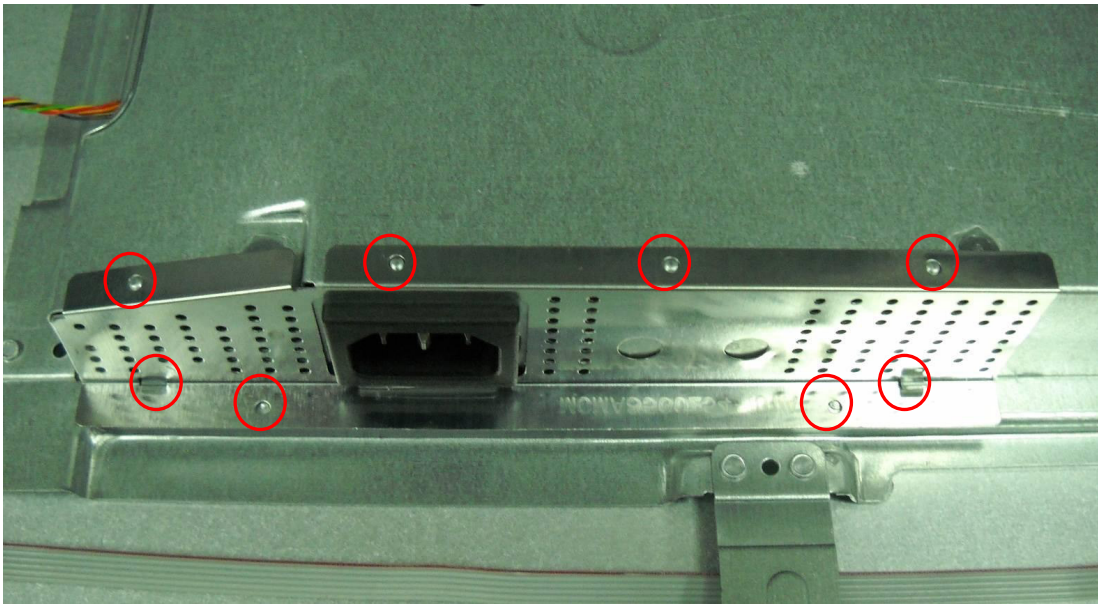

7) Assemble the rear cover.

Lock the main frame and rear cover as follow picture.

8) Assemble the stand.

Push the stand as follow picture.

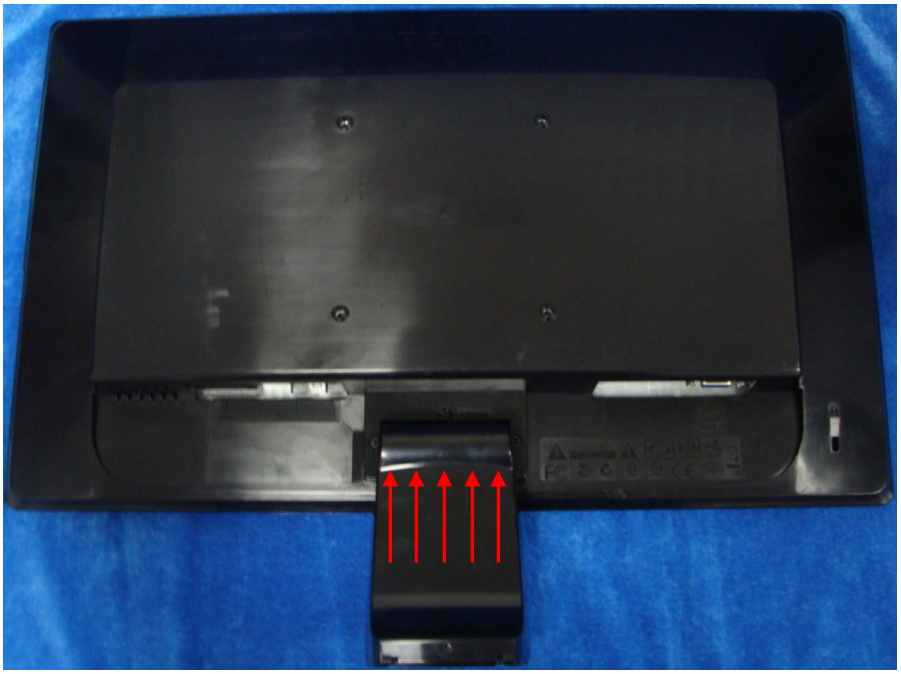

9) Assemble the base.

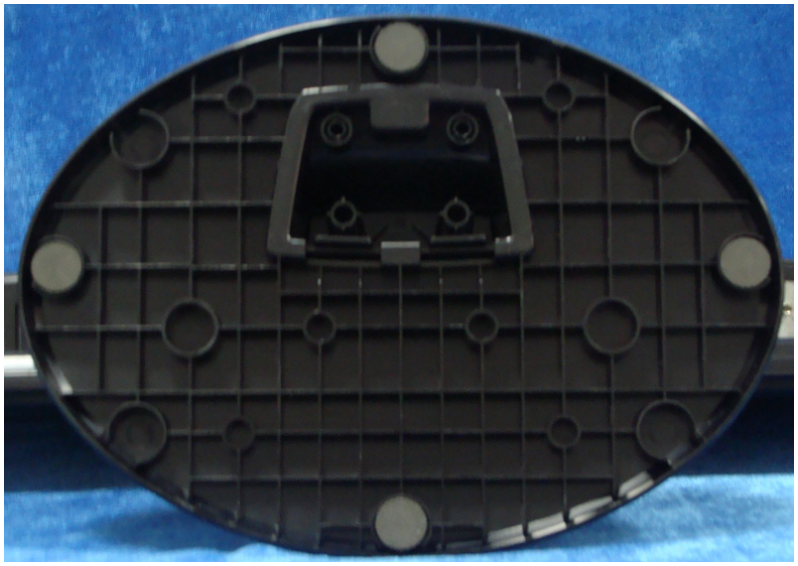

Block Diagram

Main Board

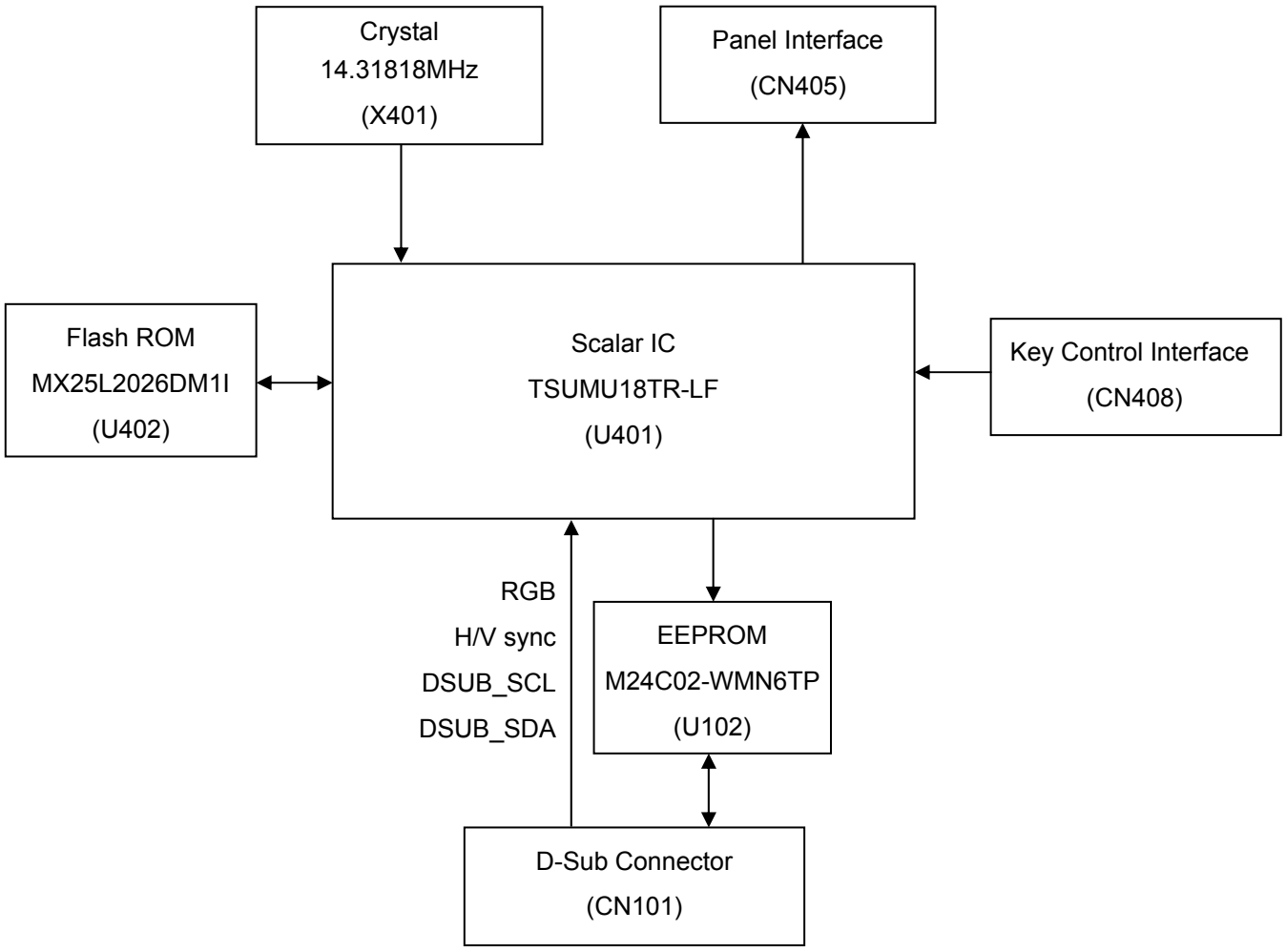

Power Board

G950A/G950AM

715G5000P01001003H

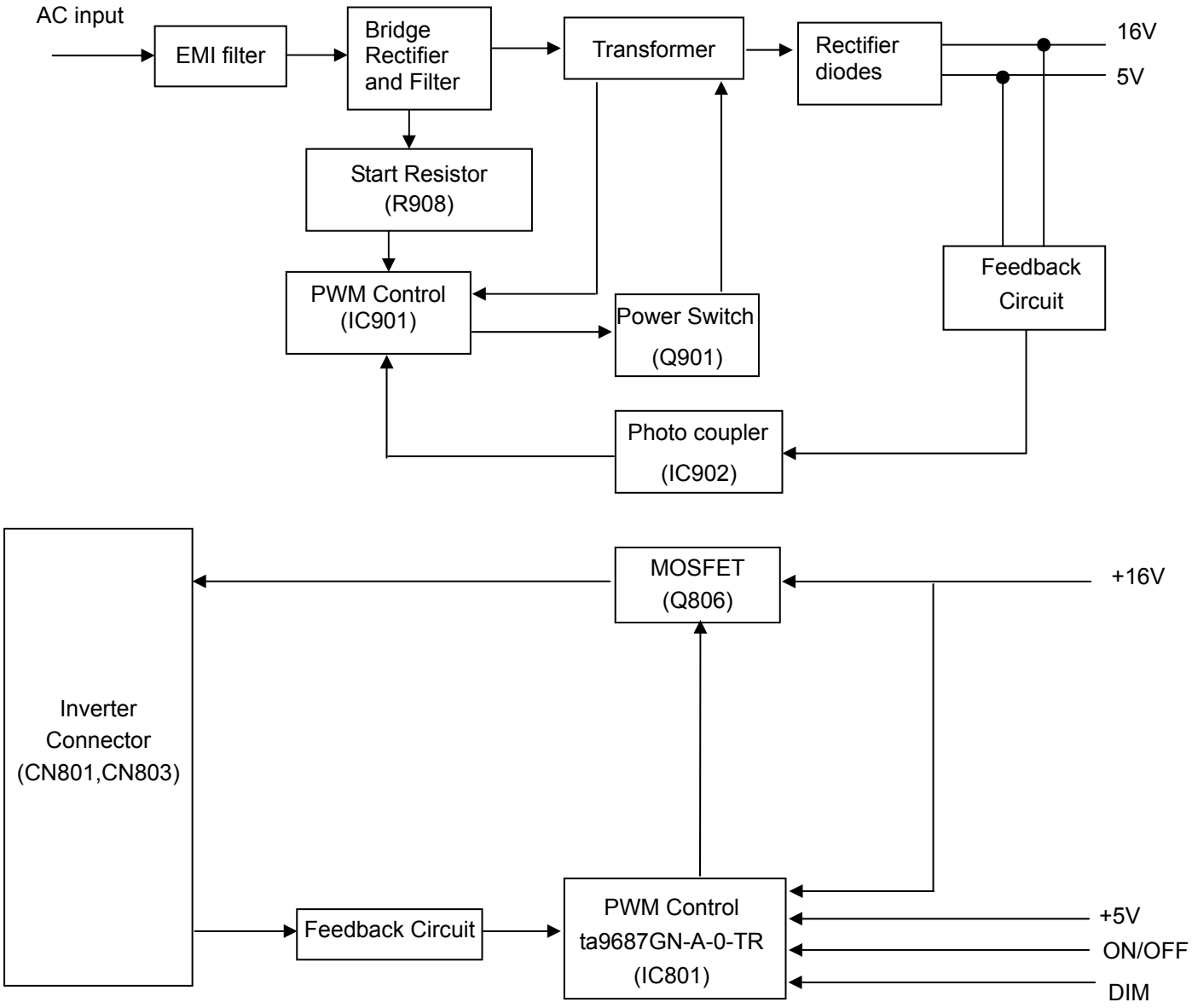

GL950A/GL950AM

715G5000P01000003H

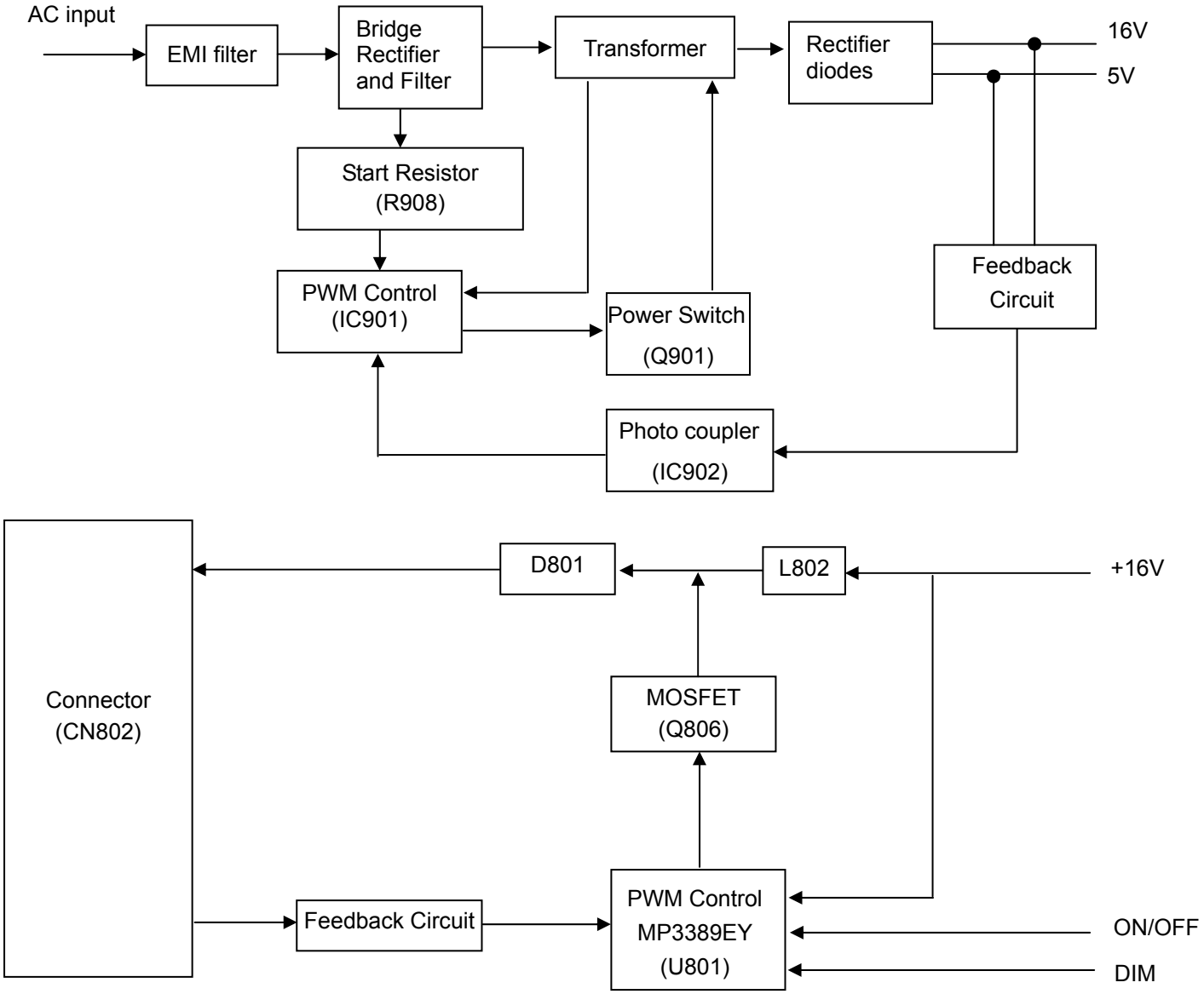

Schematic Diagram

Main Board

715G4967M0D000004L

TSUMU18TR SCHEMATIC

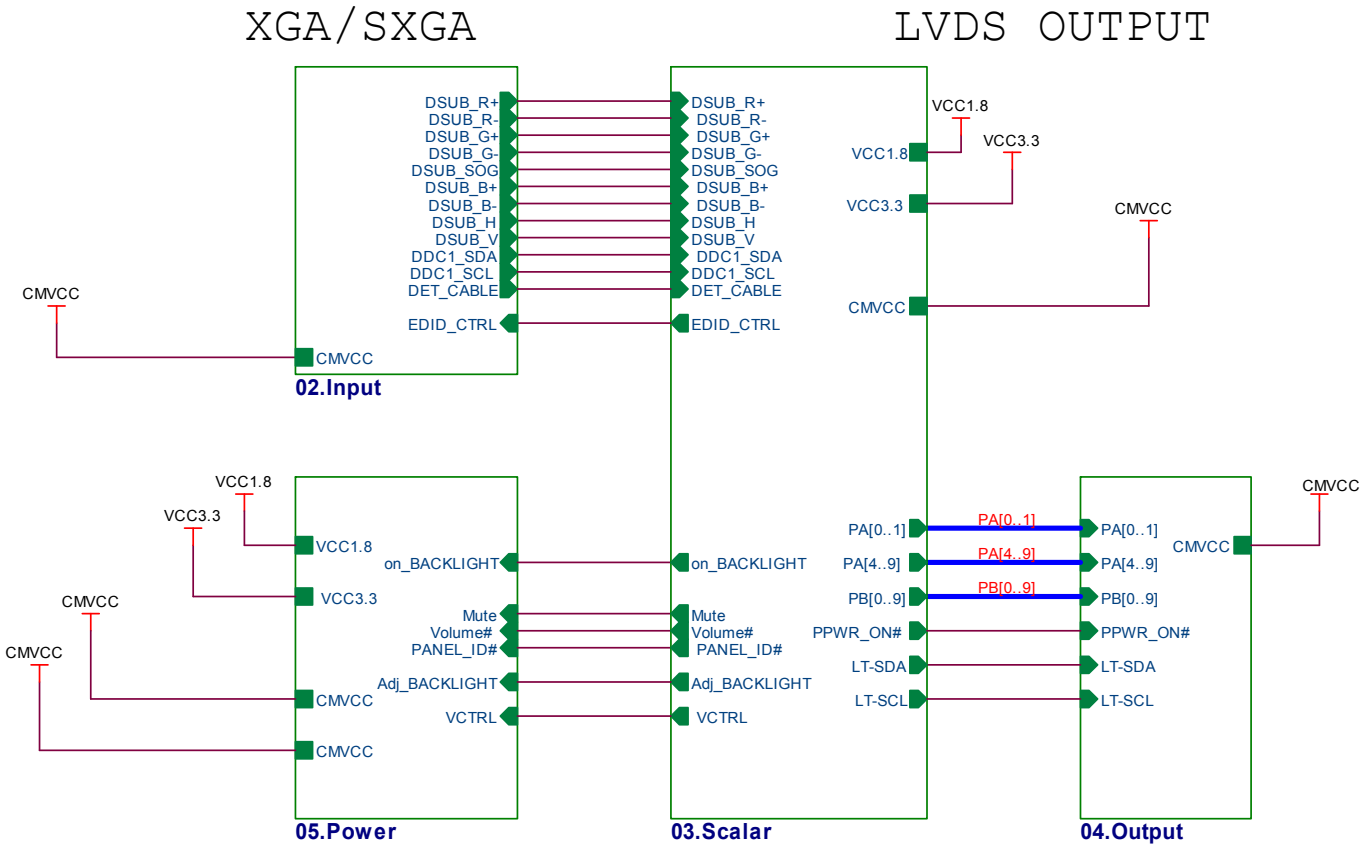

T P V （Top Victory Electronics Co., Ltd.）		OEM MODEL		Size	A
紙隔瓜網腹	G4967-M0B-000-0040-1-0406	TPV MODEL		Rev	A
Key Component	01.Top	PCB NAME	715G4967-M0A-000-0040	称爹	
Date	Wednesday, June 15, 2011	Sheet	1 of 5		

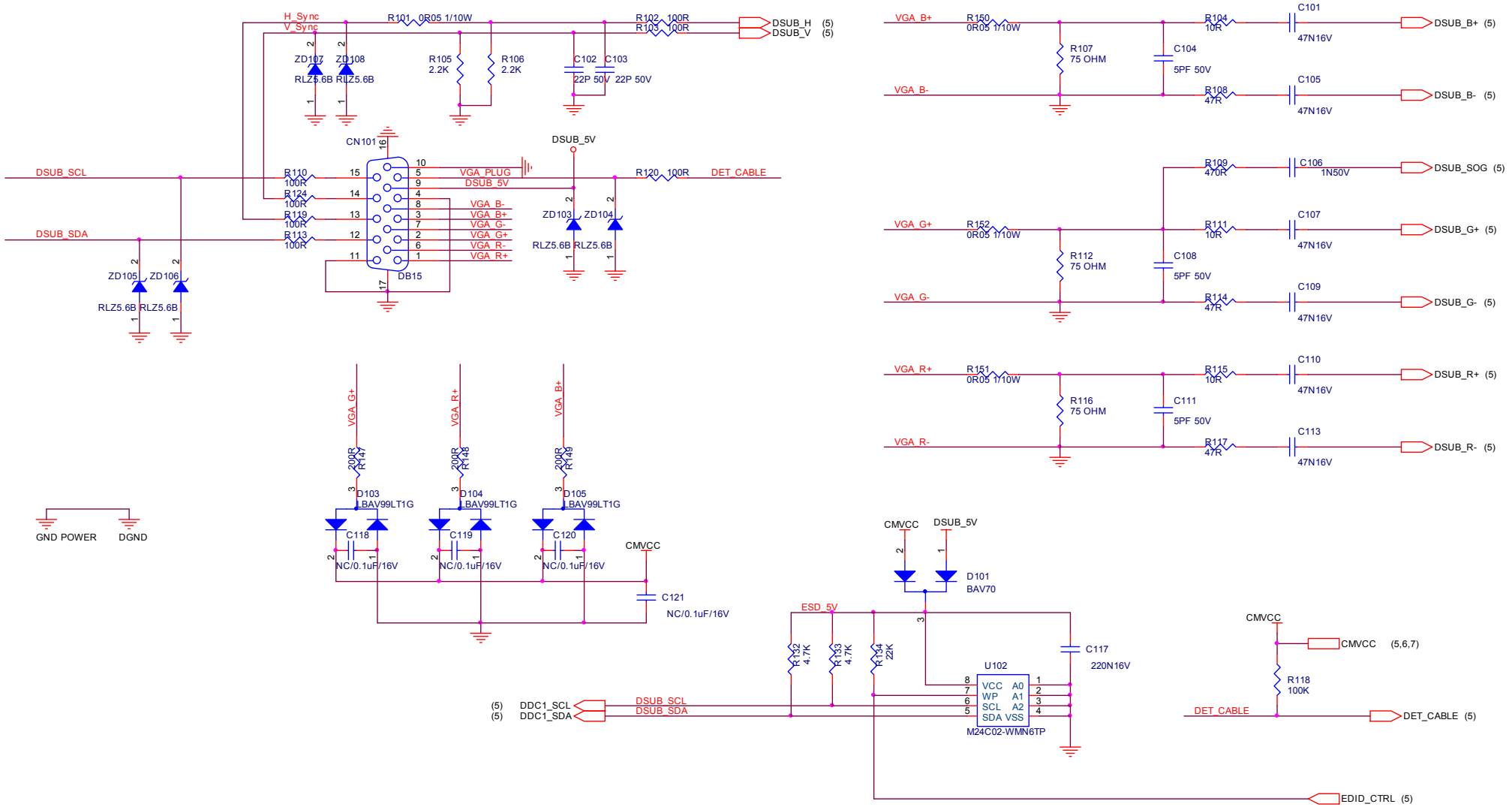

T P V （Top Victory Electronics Co., Ltd.）		OEM MODEL		Size	B
話 隔 瓜 錮 腹	G4967-M0B-000-0040-1-0406	TPV MODEL		Rev	A
Key Component	02.Input	PCB NAME	715G4967-M0A-000-0040	称爹	
Date	Wednesday, June 15, 2011	Sheet	2 of 5		

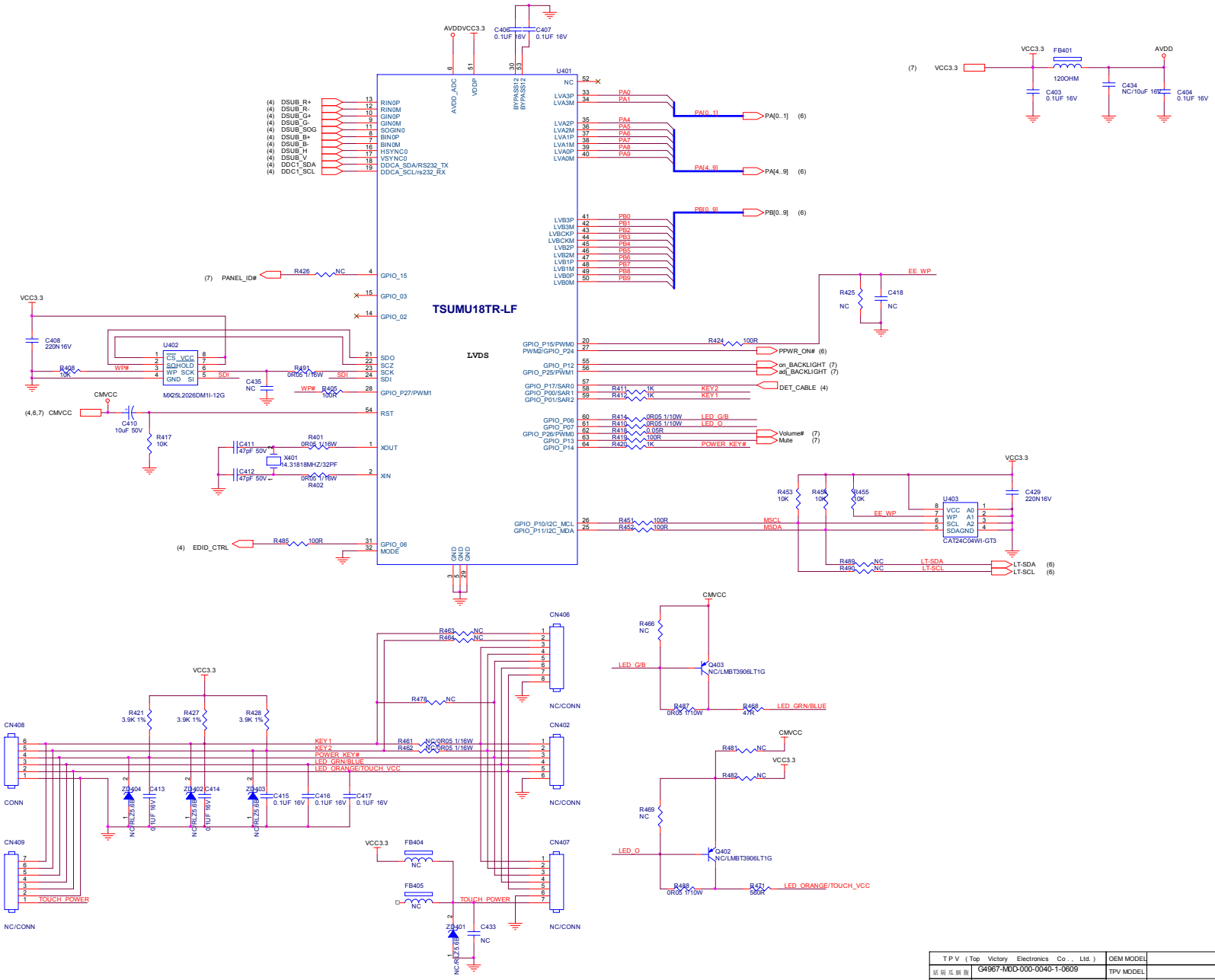

T P V (Top Victory Electronics Co., Ltd.)		OEM MODEL		Size	C
結陽瓜鋼腹	G4967-MDD-000-0040-1-0609	TPV MODEL		Rev	1
Key Component	03.Scalar	PCB NAME	715G4967-MDA-000-0040	修修	
Date	Wednesday, June 15, 2011	Sheet	3 of 5		

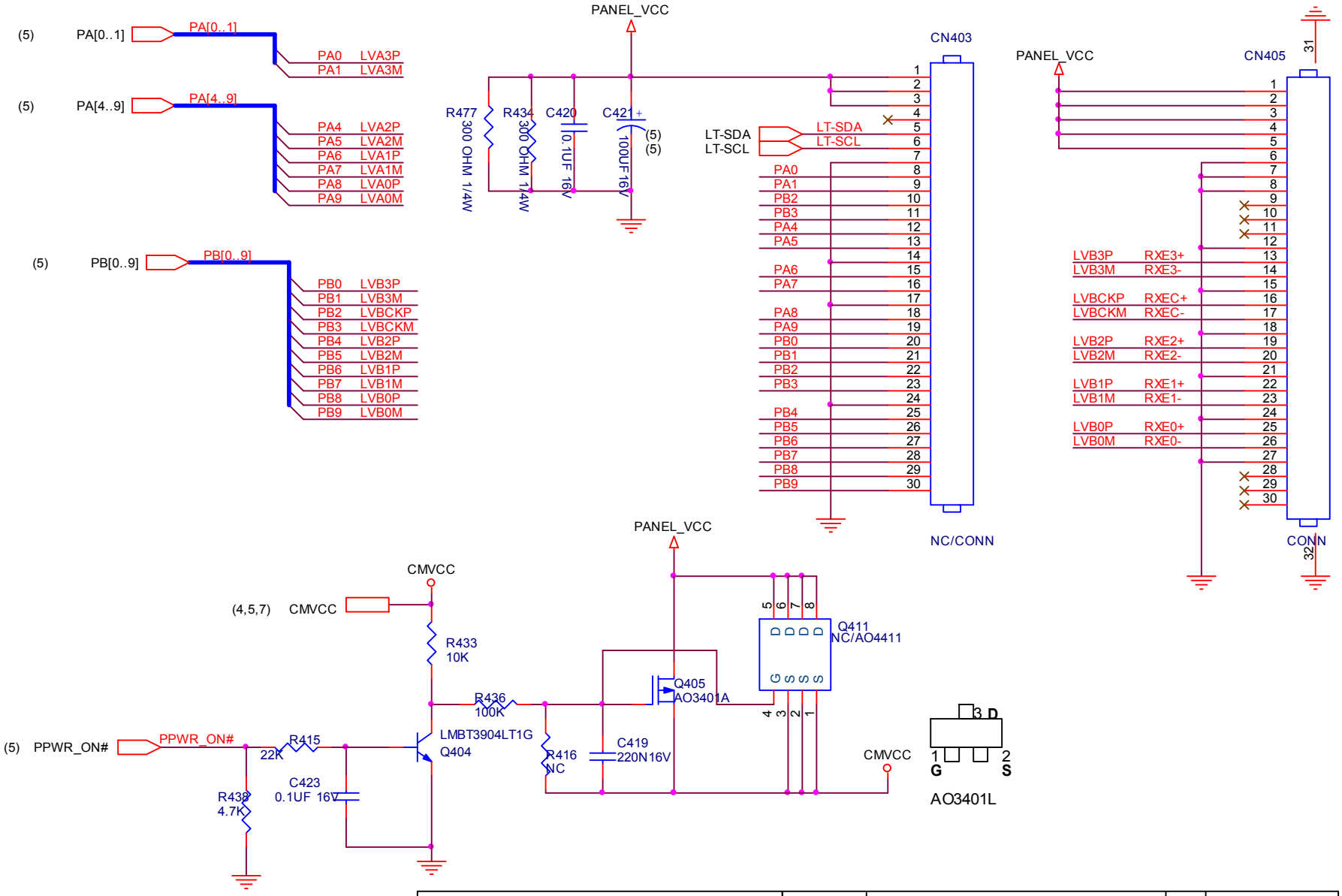

T P V （Top Victory Electronics Co . , Ltd. ）		OEM MODEL		Size	A
結 隔 瓜 網 腹	G4967-M0B-000-0040-1-0406	TPV MODEL		Rev	A
Key Component	04.Output	PCB NAME	715G4967-M0A-000-0040	称爹	
Date	Wednesday , June 15, 2011	Sheet	4 of 5		

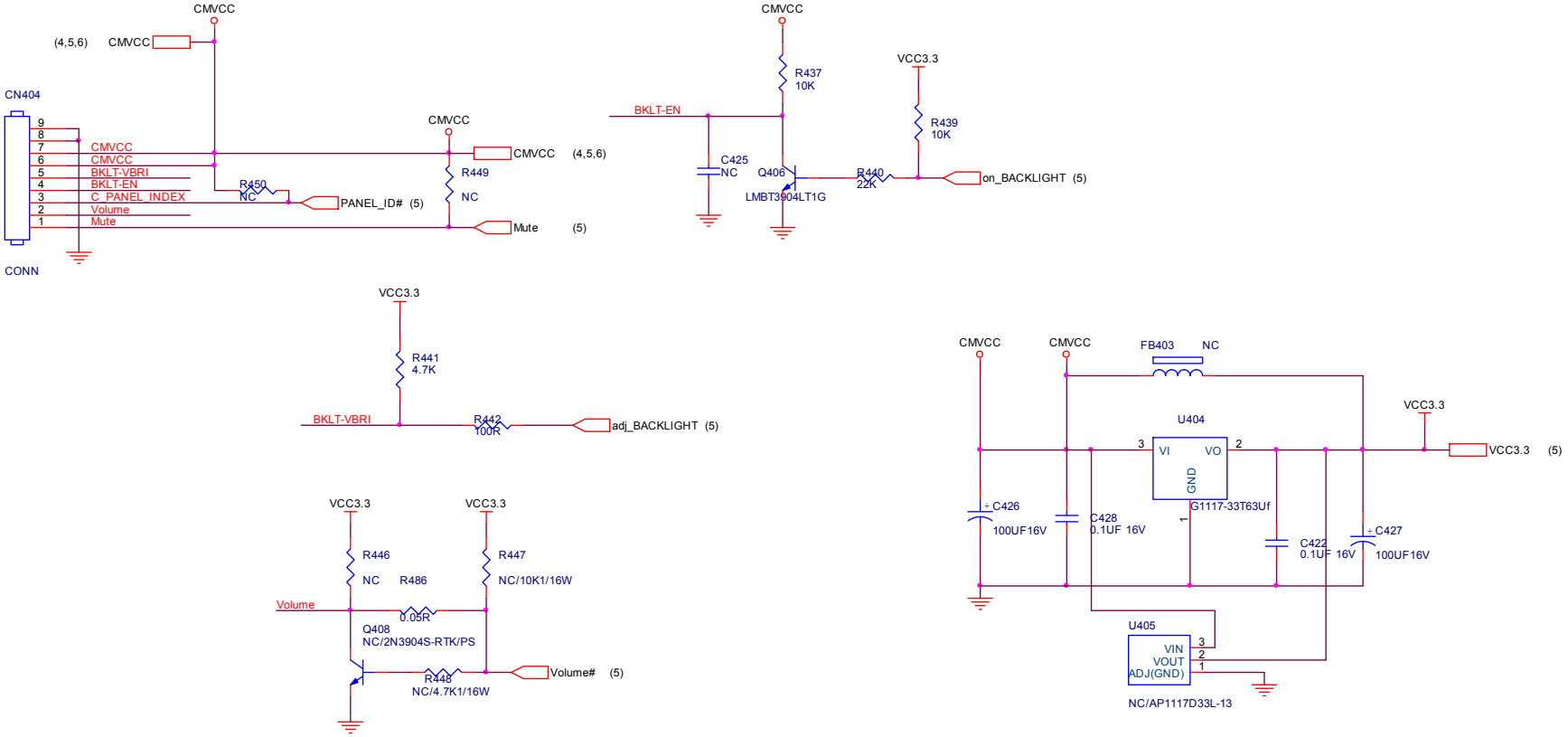

T P V (Top Victory Electronics Co . , Ltd.)		OEM MODEL		Size	B
結 隔 瓜 銅 腹	G4967-M0B-000-0040-1-0427	TPV MODEL		Rev	F
Key Component	05.Power	PCB NAME	715G4967-M0A-000-0040	称爹	
Date	Wednesday , June 15, 2011	Sheet	5 of 5		

Power Board

G950A/G950AM

715G5000P01001003H

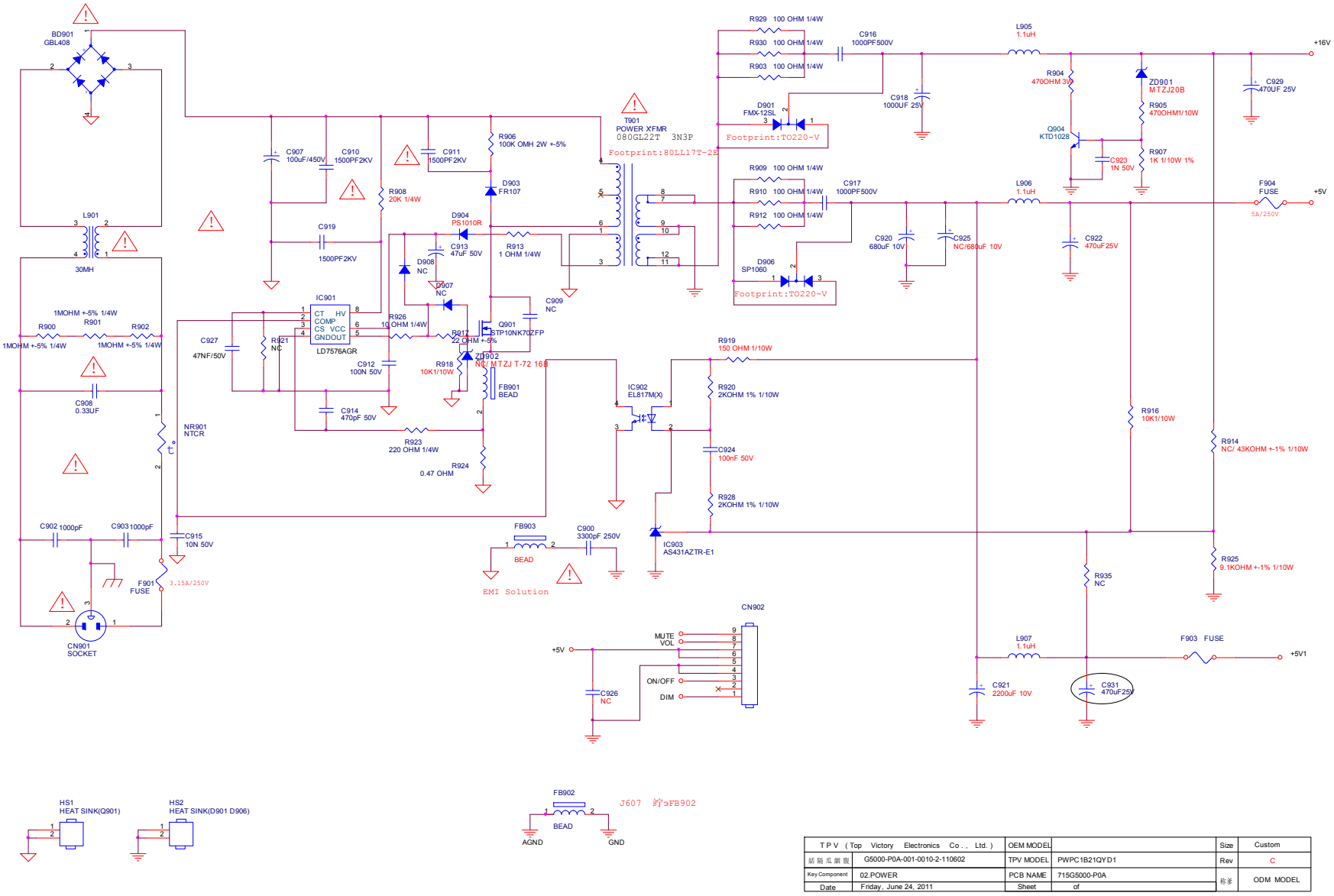

T P V (Top Victory Electronics Co., Ltd.)		OEM MODEL		Size	Custom
版 隔 瓜 瓣 版	G5000-P0A-001-0010-2-110602	TPV MODEL	PWPC1B21QYD1	Rev	C
Key Component	02.POWER	PCB NAME	715G5000-P0A	称 多	ODM MODEL
Date	Friday, June 24, 2011	Sheet	of		

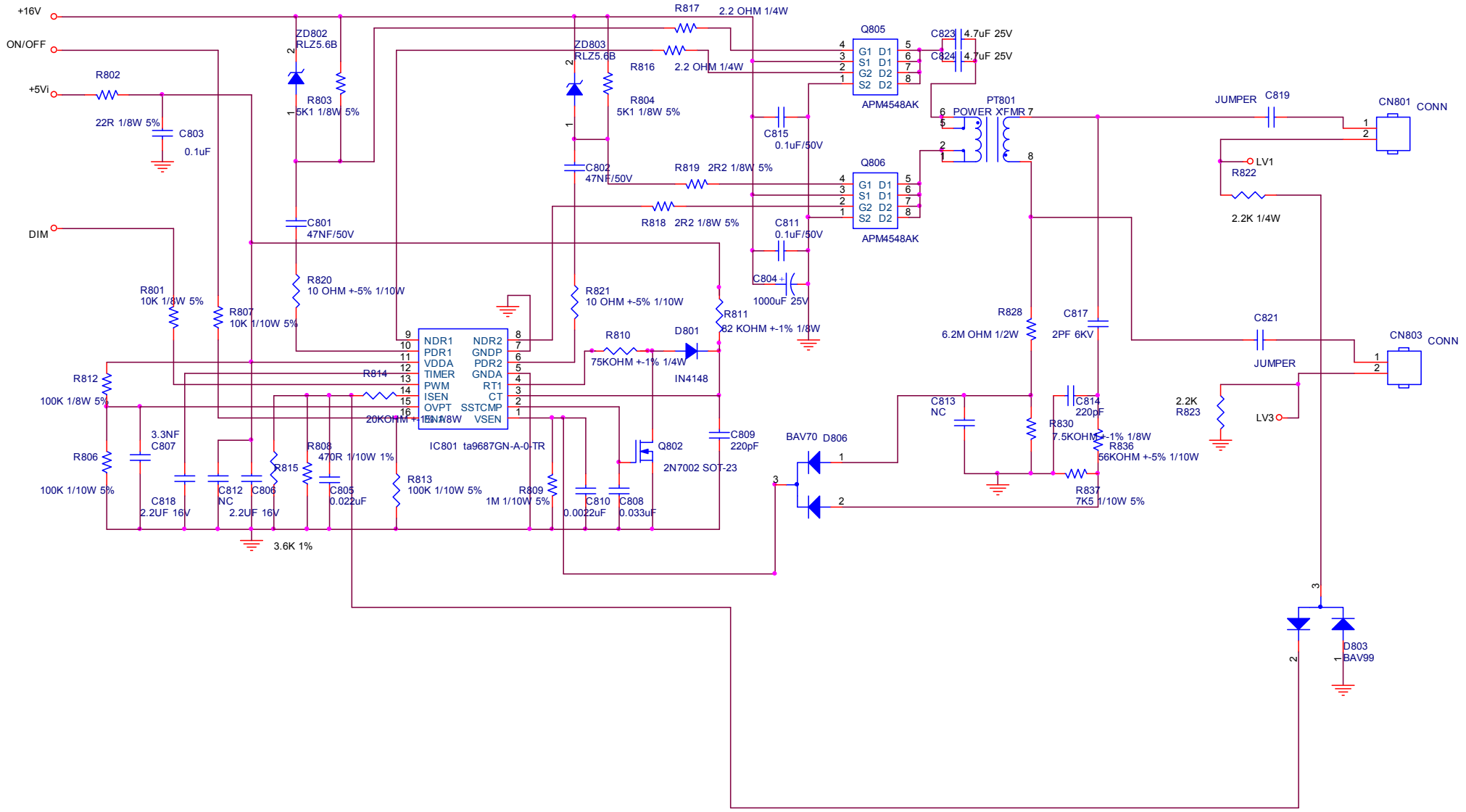
+16V
ON/OFF
+5Vi
DIM
R802
22R 1/8W 5%
C803
0.1uF
ZD802
RLZ5.6B
R803
5K1 1/8W 5%
C801
47NF/50V
R820
10 OHM +-5% 1/10W
R801
10K 1/8W 5%
R807
10K 1/10W 5%
R812
100K 1/8W 5%
R806
100K 1/10W 5%
3.3NF
C807
C818
2.2UF 16V
C812
NC
2.2UF 16V
C806
R815
R808
470R 1/10W 1%
C805
0.022uF
3.6K 1%
R814
20KOHM +-1% 1/8W
NDR1
PDR1
VDDA
TIMER
PWM
ISEN
OVPT
NDR2
GNDP
PDR2
GNDA
RT1
CT
SSTCMP
VSEN
IC801 ta9687GN-A-0-TR
R813
100K 1/10W 5%
R809
1M 1/10W 5%
C810
0.0022uF
C808
0.033uF
ZD803
RLZ5.6B
R816
2.2 OHM 1/4W
R804
5K1 1/8W 5%
C802
47NF/50V
R817
2.2 OHM 1/4W
R819
2R2 1/8W 5%
R818
2R2 1/8W 5%
R821
10 OHM +-5% 1/10W
R810
75KOHM +-1% 1/4W
D801
IN4148
R811
82 KOHM +-1% 1/8W
C809
220pF
Q802
2N7002 SOT-23
C815
0.1uF/50V
C811
0.1uF/50V
C804
1000uF 25V
Q805
G1 D1
S1 D1
G2 D2
S2 D2
APM4548AK
Q806
G1 D1
S1 D1
G2 D2
S2 D2
APM4548AK
C823
4.7uF 25V
C824
4.7uF 25V
PT801
POWER XFMR
BAV70 D806
R828
6.2M OHM 1/2W
C817
2PF 6KV
C813
NC
C814
220pF
R830
7.5KOHM +-1% 1/8W
R836
56KOHM +-5% 1/10W
R837
7K5 1/10W 5%
JUMPER
C819
CN801
CONN
LV1
R822
2.2K 1/4W
C821
JUMPER
CN803
CONN
2.2K
R823
LV3
D803
BAV99

Just for G950AM

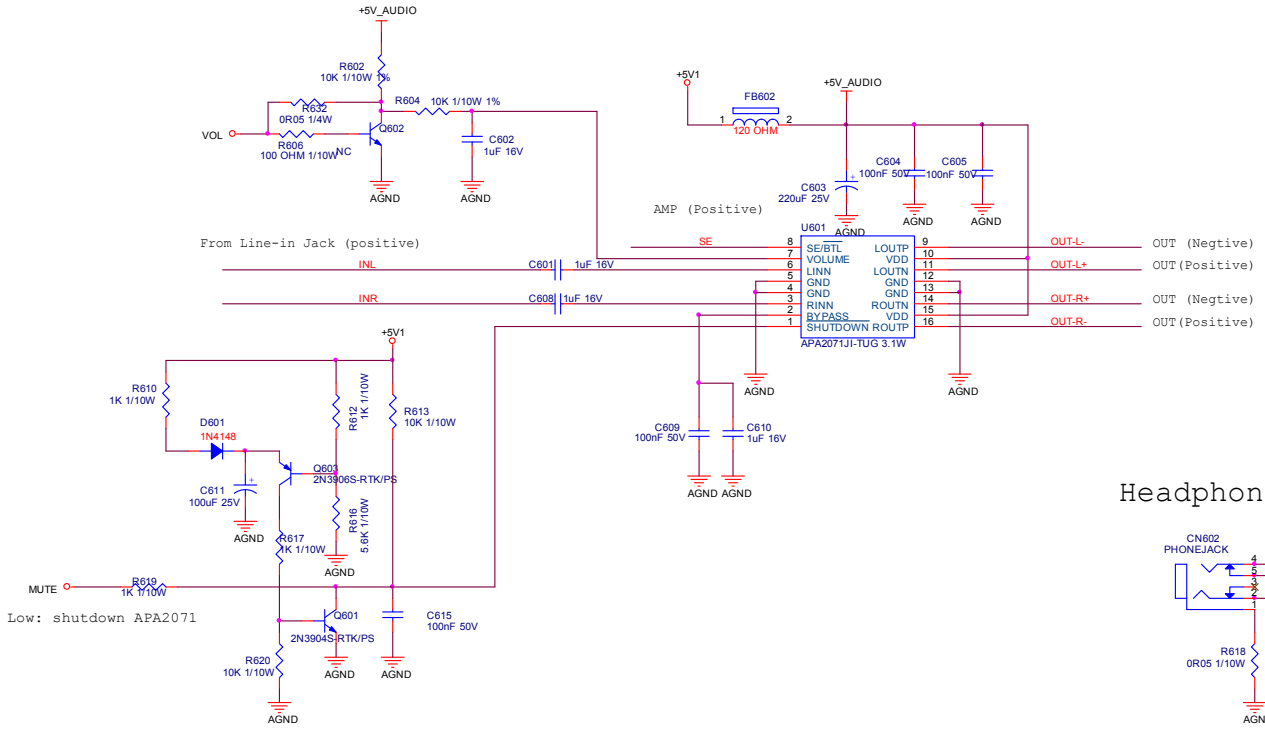

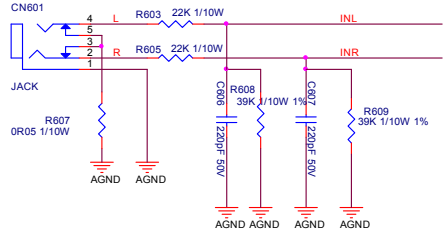

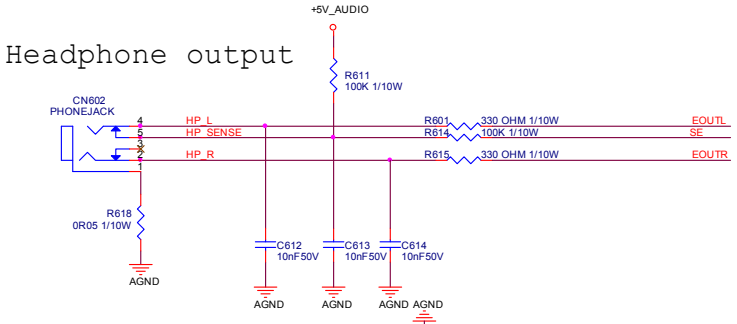

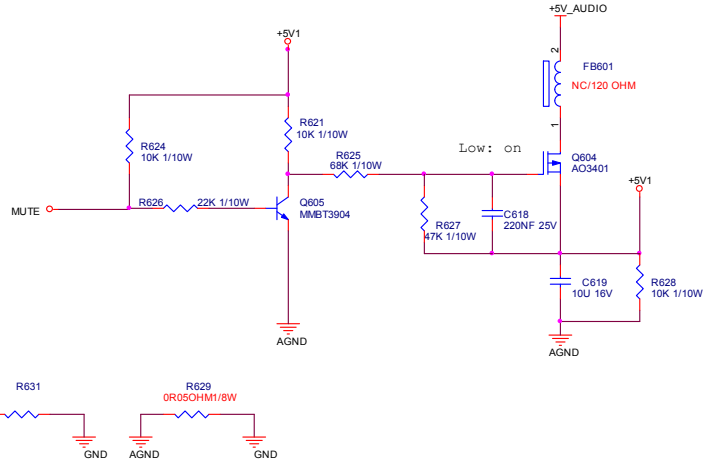

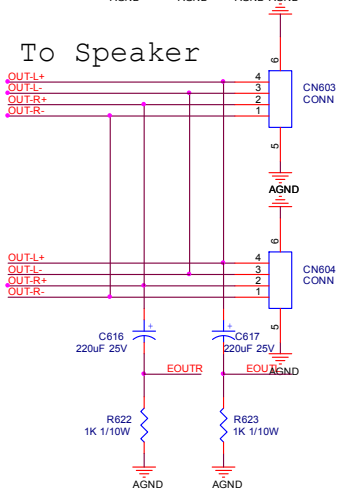

GL950A/GL950AM

715G5000P01000003H

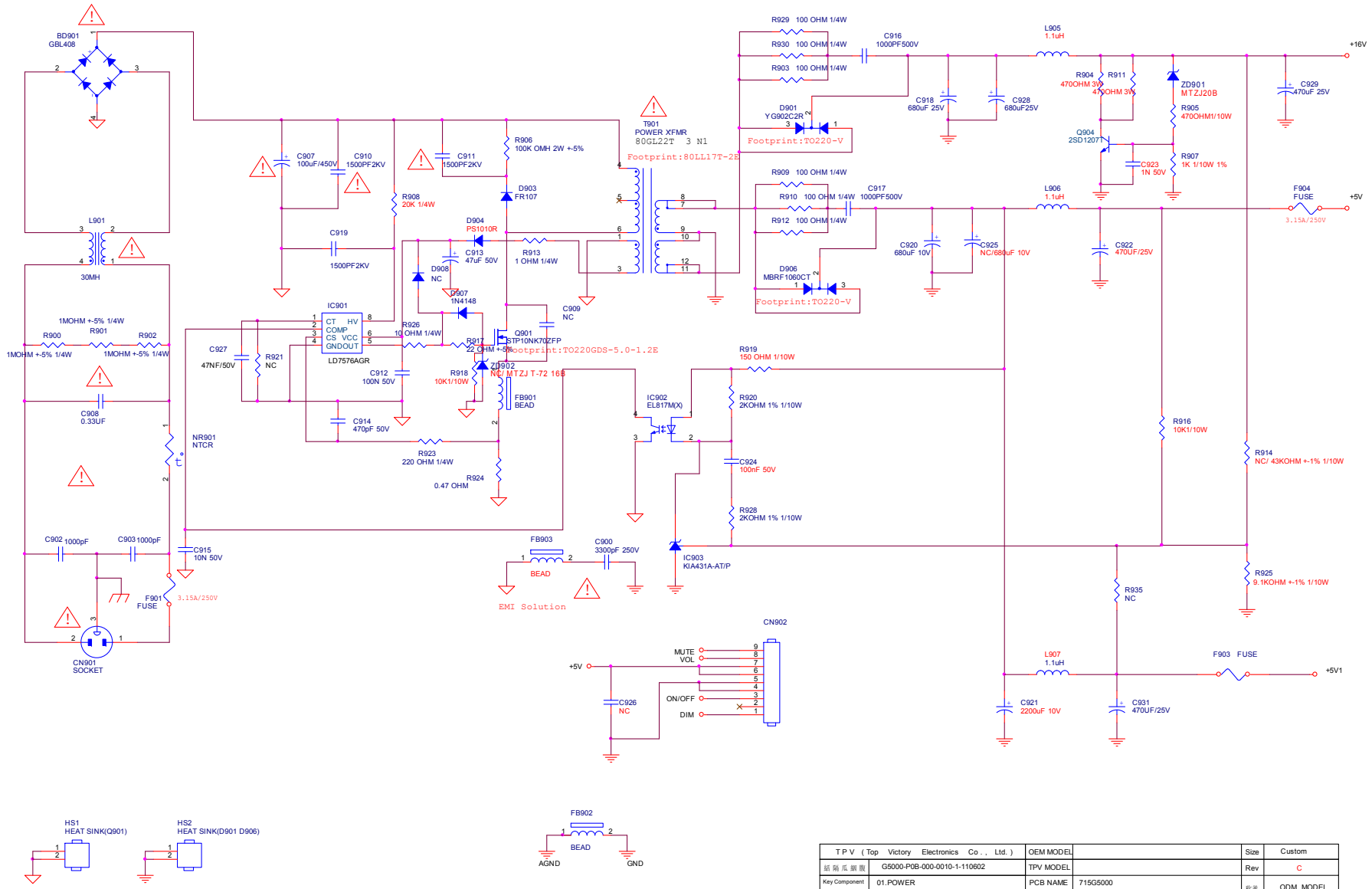

T P V (Top Victory Electronics Co., Ltd.)		OEM MODEL		Size	Custom
結隔瓜鋼腹	G5000-P0B-000-0010-1-110602	TPV MODEL		Rev	C
Key Component	01.POWER	PCB NAME	715G5000	称爹	ODM MODEL
Date	Thursday, June 16, 2011	Sheet	of		

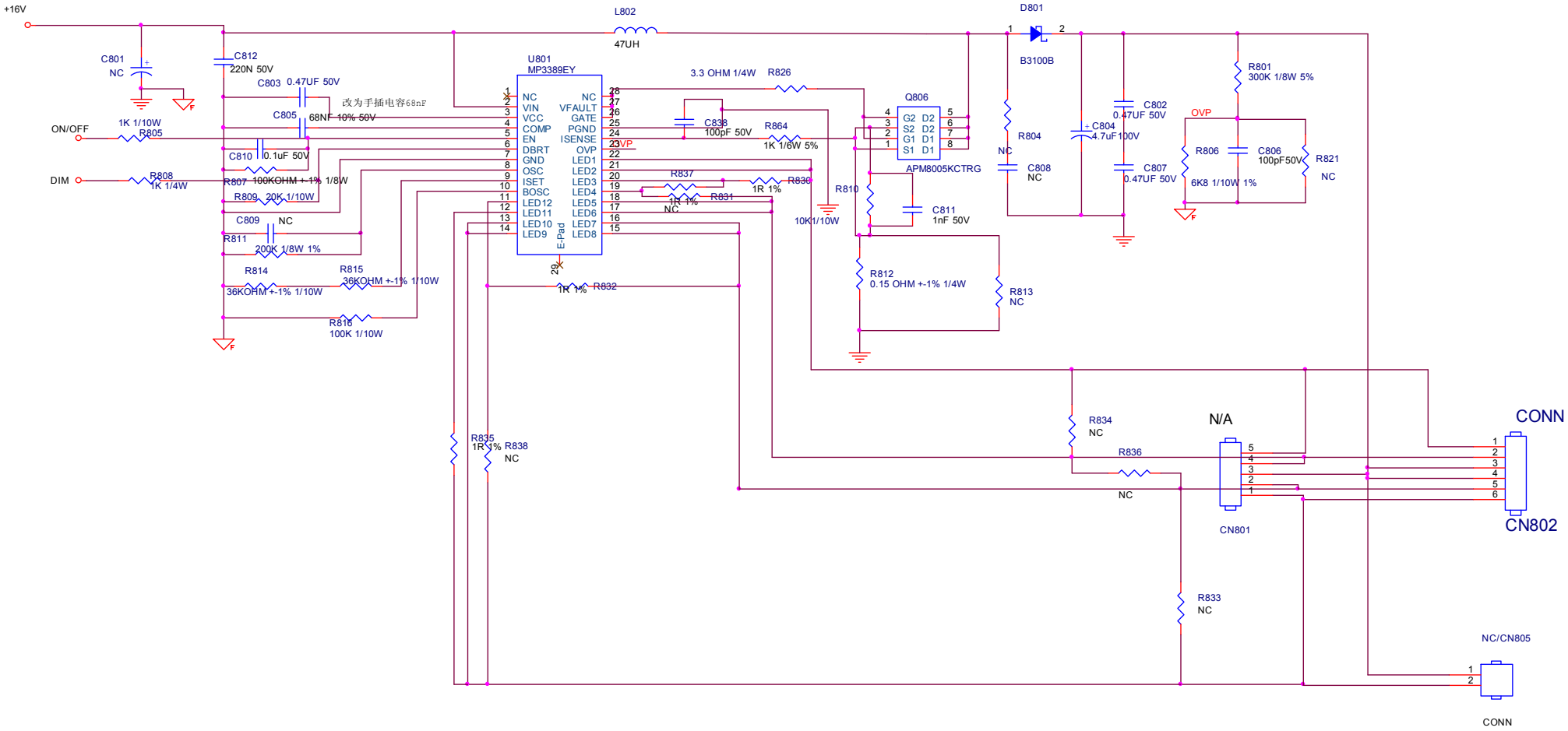
+16V
L802
47UH
D801
B3100B
C801
NC
C812
220N 50V
C803 0.47UF 50V
改为手插电容68nF
C805 68NF 10% 50V
ON/OFF
1K 1/10W
R805
C810 0.1uF 50V
DIM
R808
1K 1/4W
R807 100KOHM +-1% 1/8W
R809 20K 1/10W
C809 NC
R811
200K 1/8W 1%
R814
36KOHM +-1% 1/10W
R815
36KOHM +-1% 1/10W
R816
100K 1/10W
U801
MP3389EY
NC
VIN
VCC
COMP
EN
DBRT
GND
OSC
ISET
BOSC
LED12
LED11
LED10
LED9
E-Pad
NC
VFAULT
GATE
PGND
ISENSE
OVP
LED1
LED2
LED3
LED4
LED5
LED6
LED7
LED8
3.3 OHM 1/4W
R826
C838
100pF 50V
R864
1K 1/6W 5%
OVP
R837
1R 1%
R831
NC
R830
1R 1%
R832
1K 1%
Q806
G2 D2
S2 D2
G1 D1
S1 D1
APM8005KCTRG
R810
10K1/10W
C811
1nF 50V
R812
0.15 OHM +-1% 1/4W
R813
NC
R804
NC
C808
NC
C804
4.7uF100V
C802
0.47UF 50V
C807
0.47UF 50V
R801
300K 1/8W 5%
OVP
R806
6K8 1/10W 1%
C806
100pF50V
R821
NC
R834
NC
R836
NC
R835
1R 1%
R838
NC
N/A
CN801
CONN
CN802
R833
NC
NC/CN805
CONN

Just for GL950AM

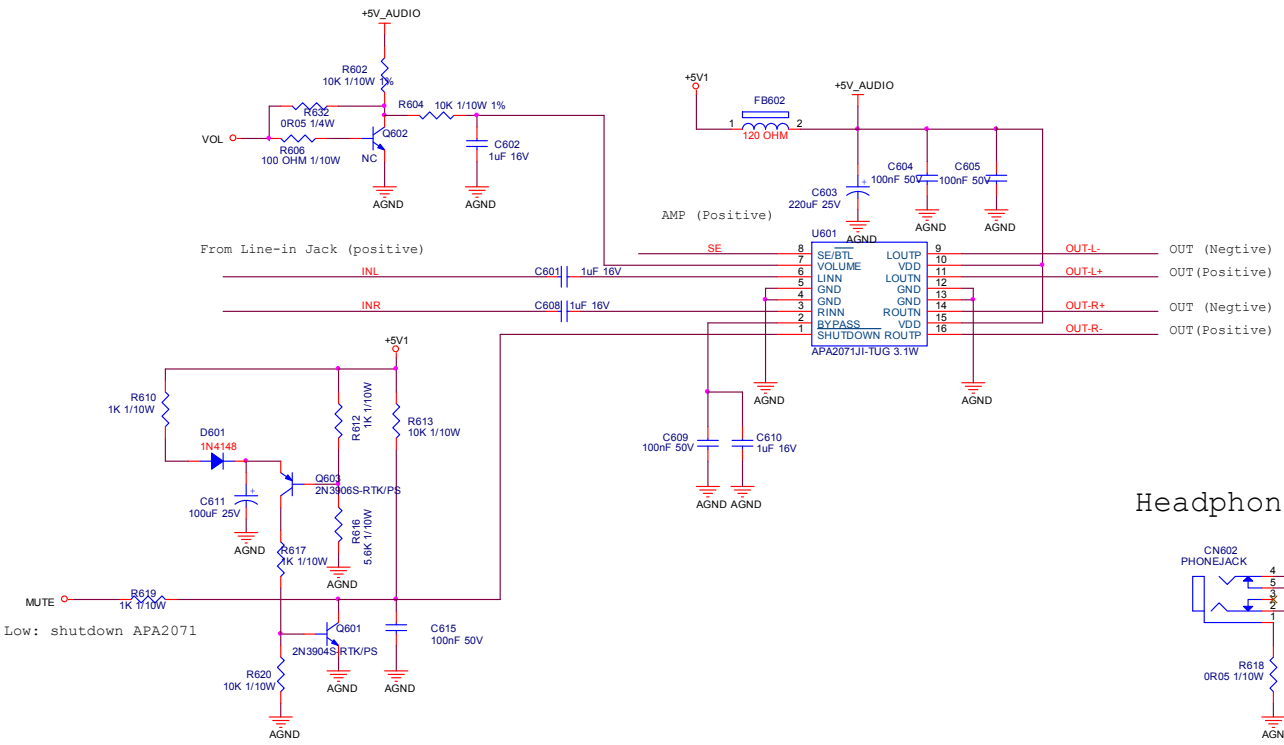

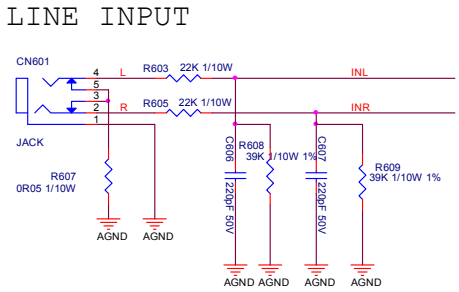

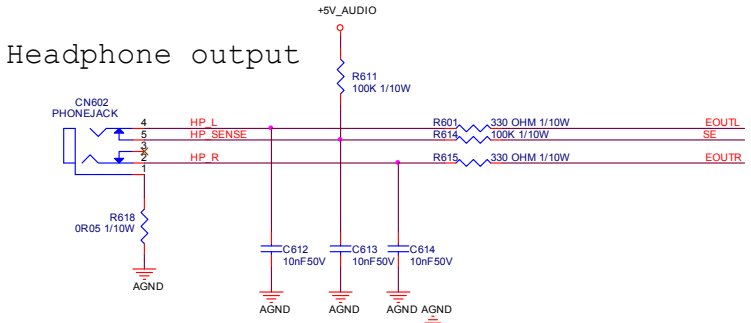

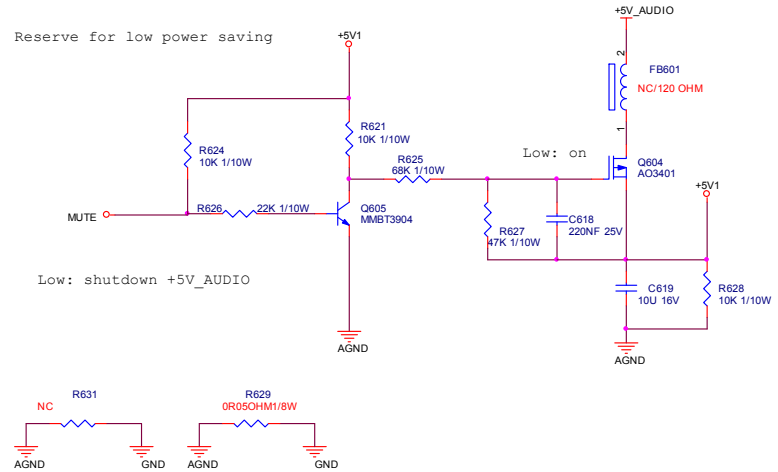

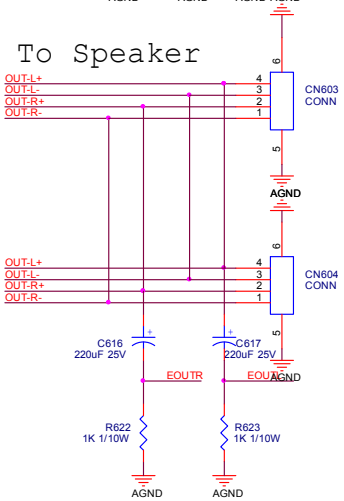

Key Board

715G5048K0C000004I

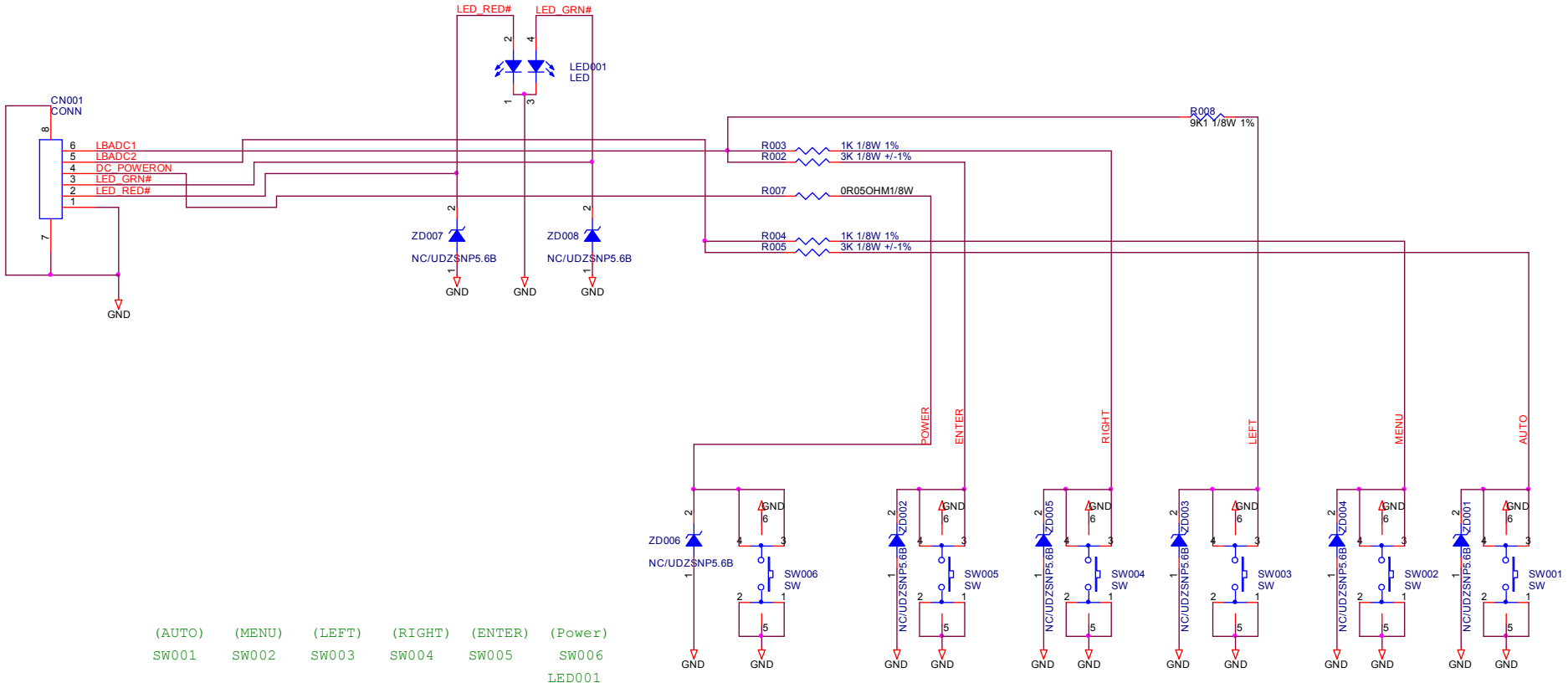

T P V (Top Victory Electronics Co., Ltd.)		OEM MODEL		Size	B
結 隔 瓜 綢 腹	G5048-C-X-X-2-110603	TPV MODEL		Rev	C
Key Component	01 KEY BOARD	PCB NAME	715G0000-A	称爹	
Date	Wednesday, June 15, 2011	Sheet	1 of 1		

Troubleshooting

Frequently asked questions (FAQ)

The image is blurred:

☞ Read the instructions on the link "**Adjusting the Screen Resolution**" on the CD, and then select the correct resolution, refresh rate and make adjustments based on these instructions.

How do you use a VGA extension cable?

☞ Remove the extension cable for the test. Is the image now in focus? If not, optimize the image by working through the instructions in the "**Adjusting the refresh rate**" section on the link "**Adjusting the Screen Resolution**". It is normal for blurring to occur due to conduction losses in extension cables. You can minimize these losses by using an extension cable with better conduction quality or with a built-in booster.

Does the blurring only occur at resolutions lower than the native (maximum) resolution?

☞ Read the instructions on the link "**Adjusting the Screen Resolution**" on the CD. Select the native resolution.

Pixel errors can be seen:

☞ One of several pixels is permanently black, one or more pixels are permanently white, one or more pixels are permanently red, green, blue or another color.

- Clean the LCD screen.
- Cycle power on-off.
- These pixels are permanently on or off and that is a natural defect occurs in LCD technology.

The image has a faulty coloration:

☞ It has a yellow, blue or pink appearance.

Select MENU > PICTURE > Color > Reset Color, and then choose “YES” in the “Caution” message box to reset the color settings to the factory defaults.

If the image is still not correct and the OSD also has faulty coloration, this means one of the three primary colors is missing in the signal input. Now check the signal cable connectors. If any pin is bent or broken off, please contact your dealer to get necessary support.

No image can be seen:

☞ Is the prompt on the display illuminated in green?

If the LED is illuminated in green and there is a message “Out of Range” on the screen, this means you are using a display mode that this monitor does not support, please change the setting to one of the supported mode. Please read the “**Preset display modes**” section from the link "**Adjusting the Screen Resolution**".

Faint shadow from the static image displayed is visible on the screen:

☞
- Activate the power management function to let your computer and monitor go into a low power "sleep" mode when not actively in use.
- Use a screensaver to prevent the occurrence of image retention.

Is the prompt on the display illuminated in orange?

☞ If the LED is illuminated in orange, the power management mode is active. Press any button on the computer keyboard or move the mouse. If that does not help, check the signal cable connectors. If any pin is bent or broken off, please contact your dealer to get necessary support.

Is the prompt on the display not illuminated at all?

☞ Check the power supply mains socket, the external power supply and the mains switch.

The image is distorted, flashes or flickers:

☞ Read the instructions on the link "**Adjusting the Screen Resolution**" on the CD, and then select the correct resolution, refresh rate and make adjustments based on these instructions.

You are running the monitor at its native resolution, but the image is still distorted.

☞ Images from different input sources may appear distorted or stretched on the monitor running at its native resolution. To have the optimal display performance of each type of input sources, you can use the "Display Mode" function to set a proper aspect ratio for the input sources.

The image is displaced in one direction:

☞ Read the instructions on the link "**Adjusting the Screen Resolution**" on the CD, and then select the correct resolution, refresh rate and make adjustments based on these instructions.

The OSD controls are inaccessible:

☞
- To unlock the OSD controls when the OSD is preset to be locked, press and hold the “MENU” key for 15 seconds to enter the “OSD Lock” option and make changes.
- Alternatively, you may use ◀ or ▶ keys to select “NO” in the “OSD Lock” submenu from the “OSD Settings” menu (under SYSTEM), and all OSD controls will be accessible.

If your problems remain after checking this manual, please contact your place of purchase or e-mail us at: Support@BenQ.com

No Power

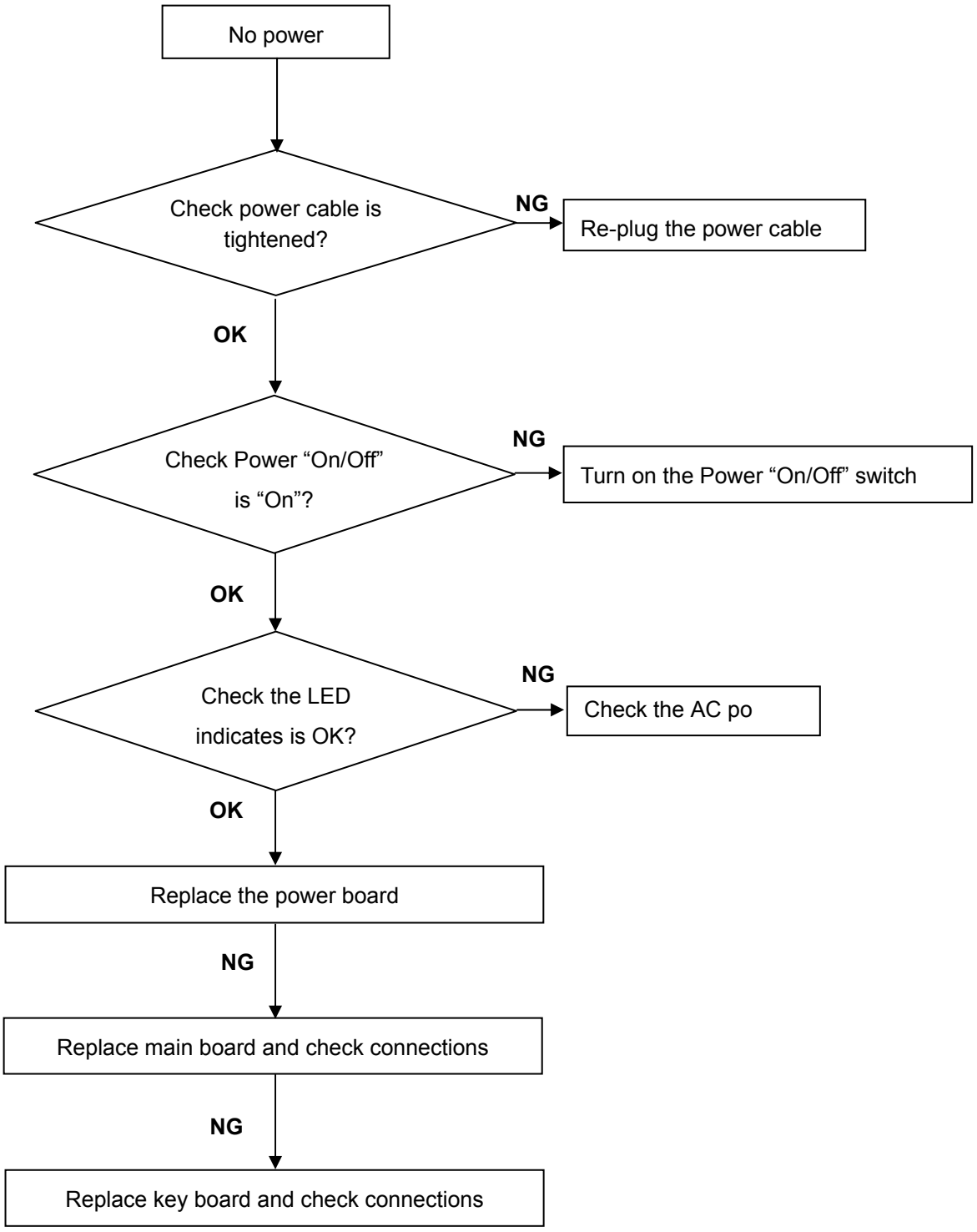
No power
Check power cable is tightened?
NG
Re-plug the power cable
OK
Check Power “On/Off” is “On”?
NG
Turn on the Power “On/Off” switch
OK
Check the LED indicates is OK?
NG
Check the AC po
OK
Replace the power board
NG
Replace main board and check connections
NG
Replace key board and check connections

No Video (Power LED Green)

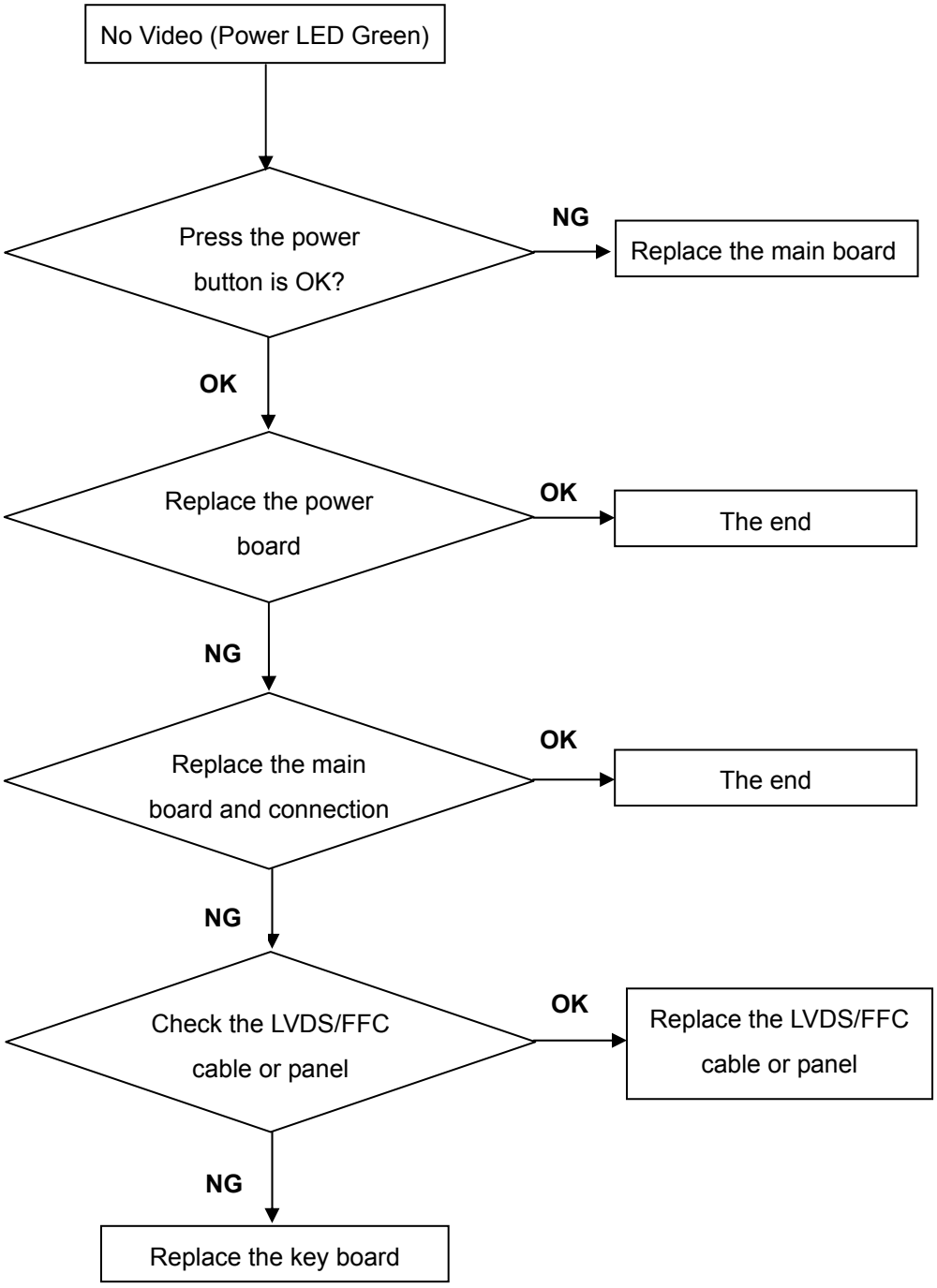

DIM

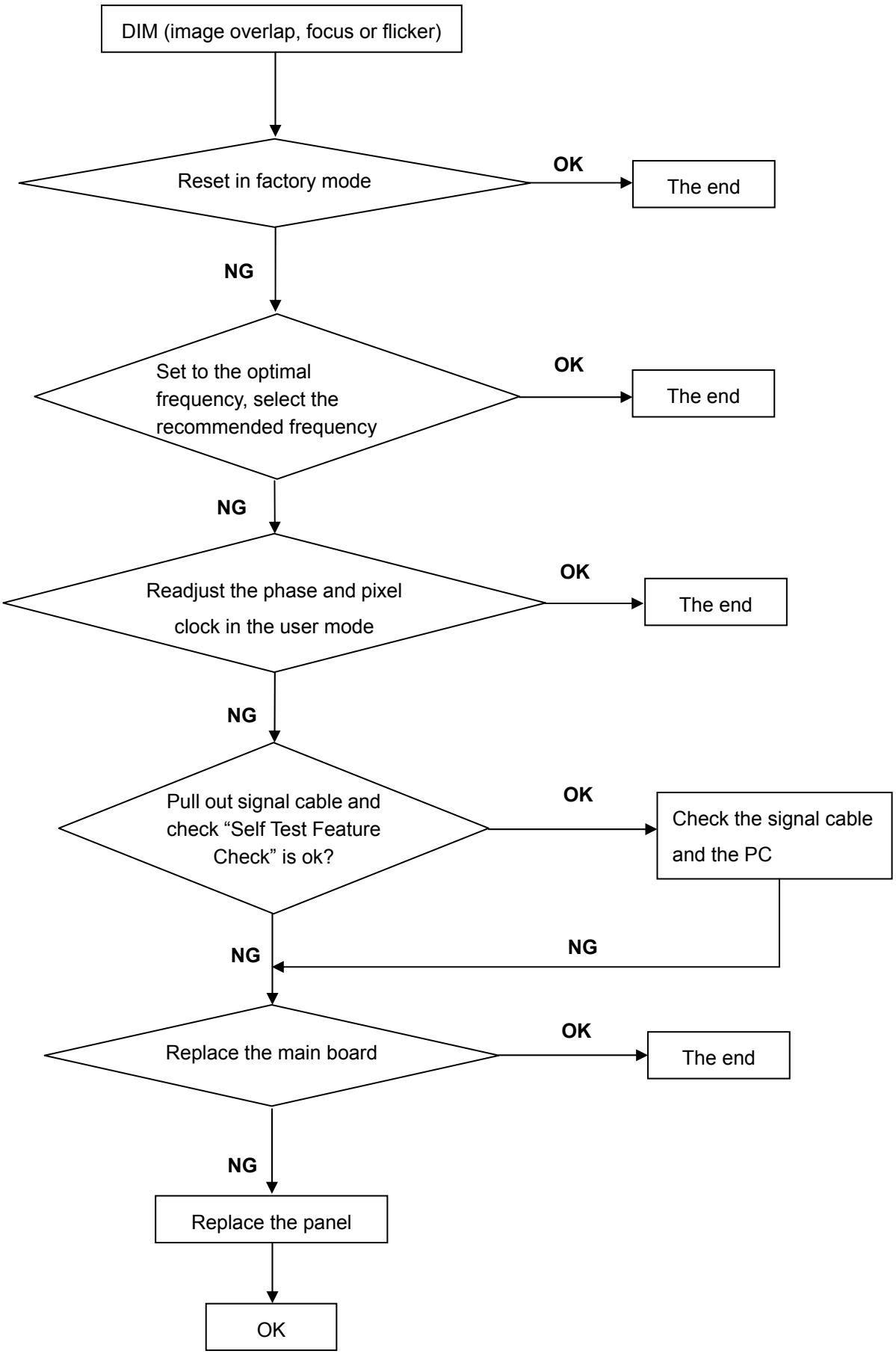
DIM (image overlap, focus or flicker)
Reset in factory mode
OK
The end
NG
Set to the optimal frequency, select the recommended frequency
OK
The end
NG
Readjust the phase and pixel clock in the user mode
OK
The end
NG
Pull out signal cable and check “Self Test Feature Check” is ok?
OK
Check the signal cable and the PC
NG
NG
Replace the main board
OK
The end
NG
Replace the panel
OK

Color is not optimal

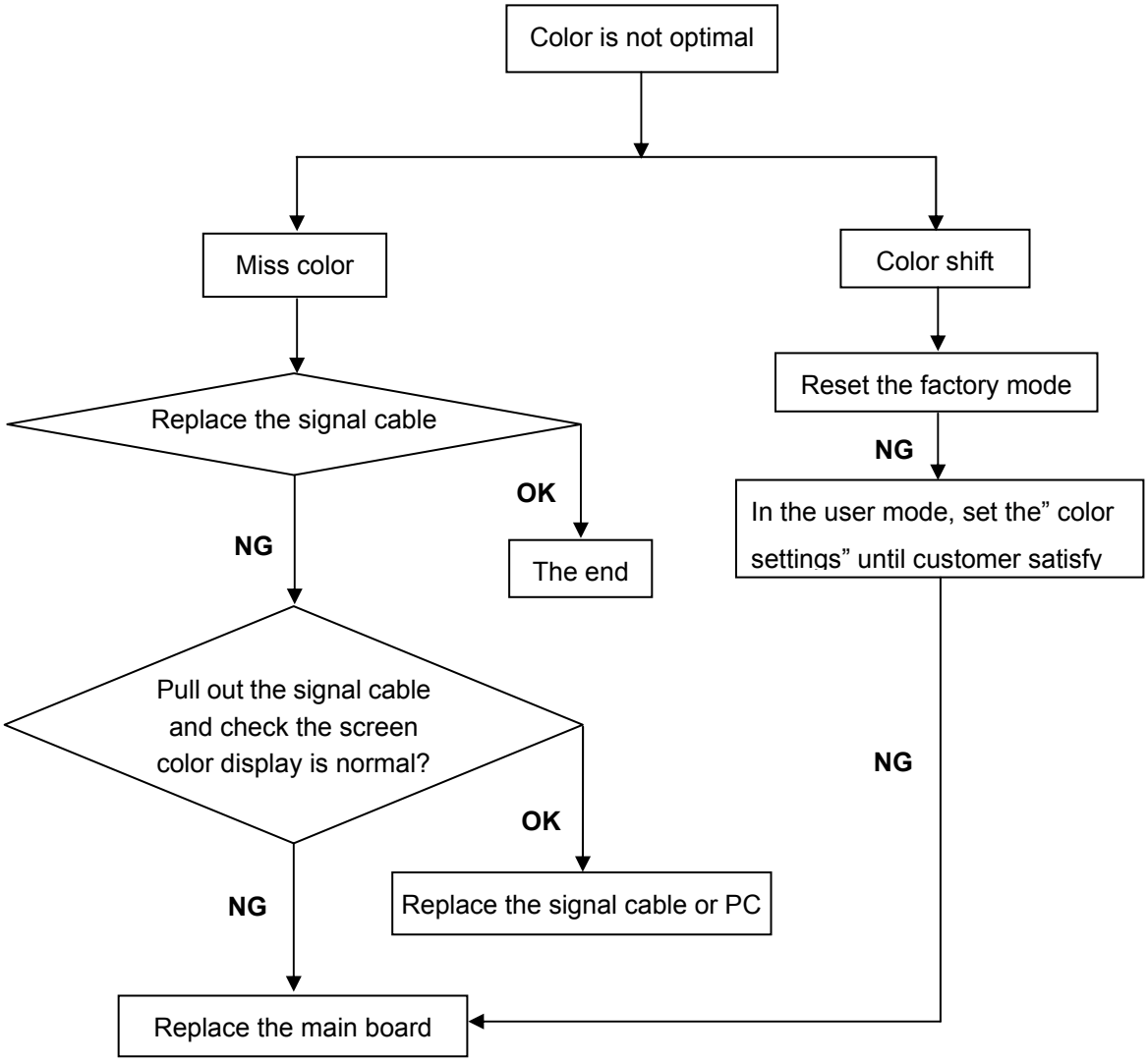

PCB LAYOUT

Main Board

715G4967M0D000004L

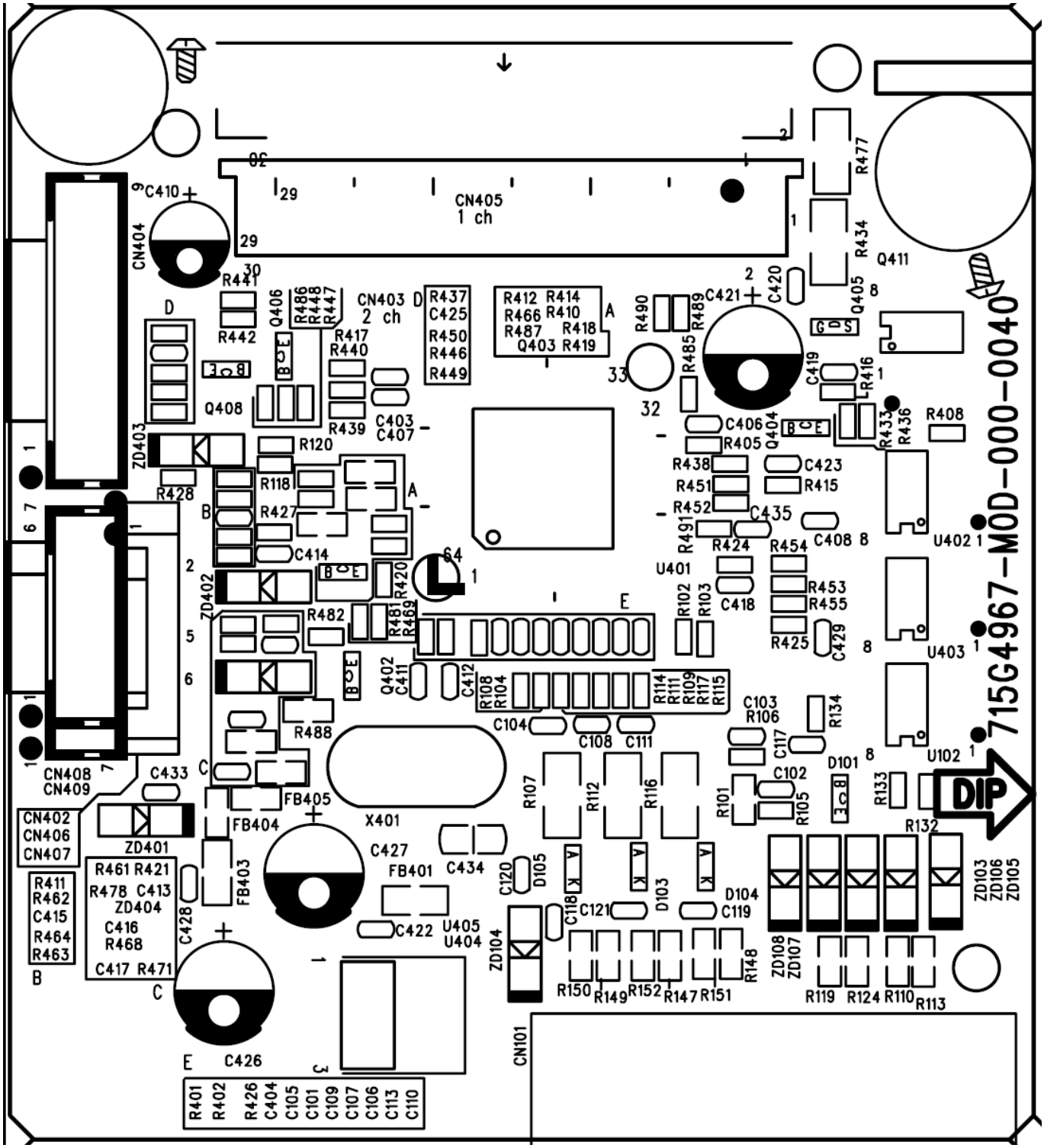

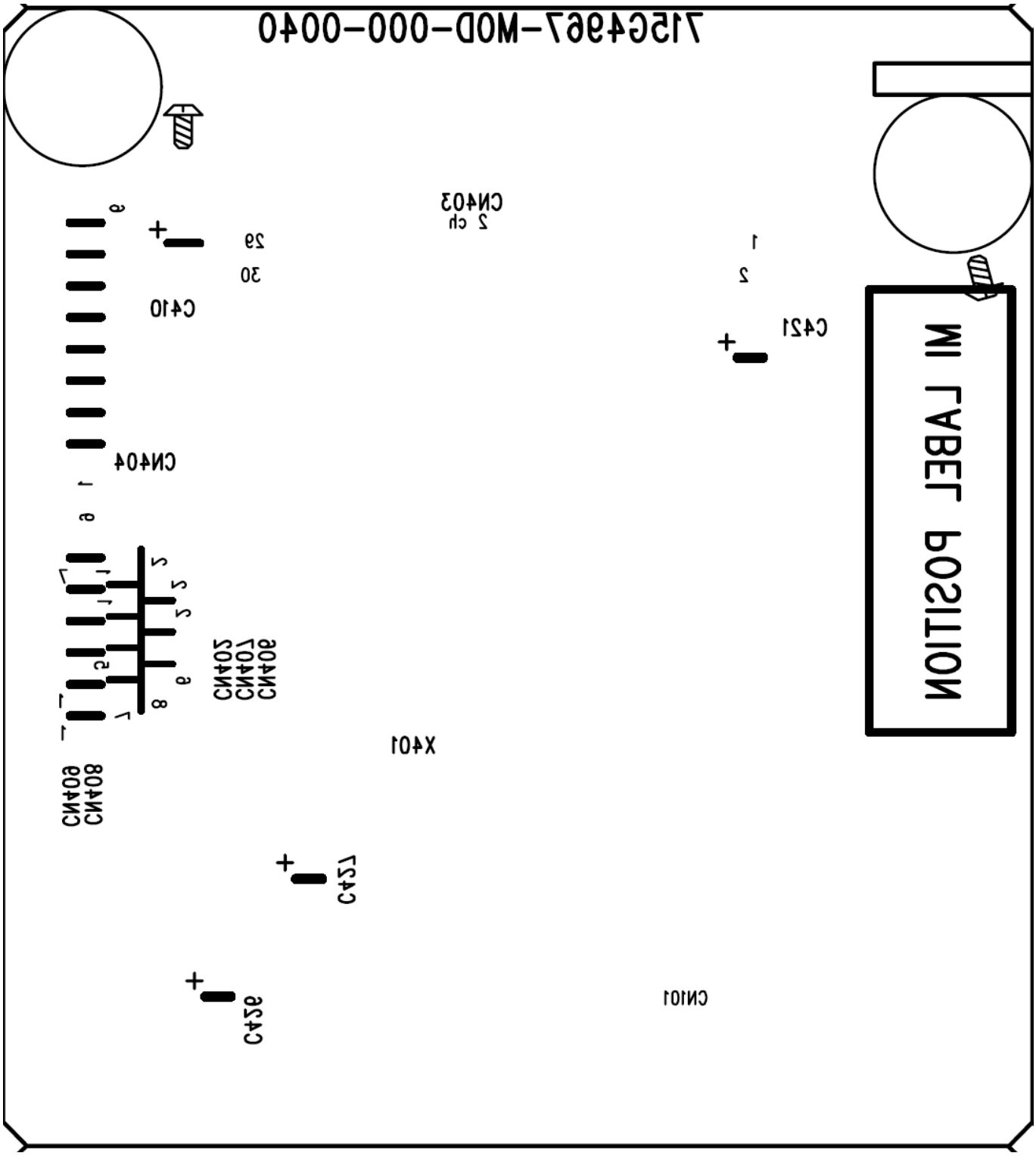
715G4967-MOD-000-0040
MI LABEL POSITION
CN403
2 ch
C410
C421
CN404
X401
CN101

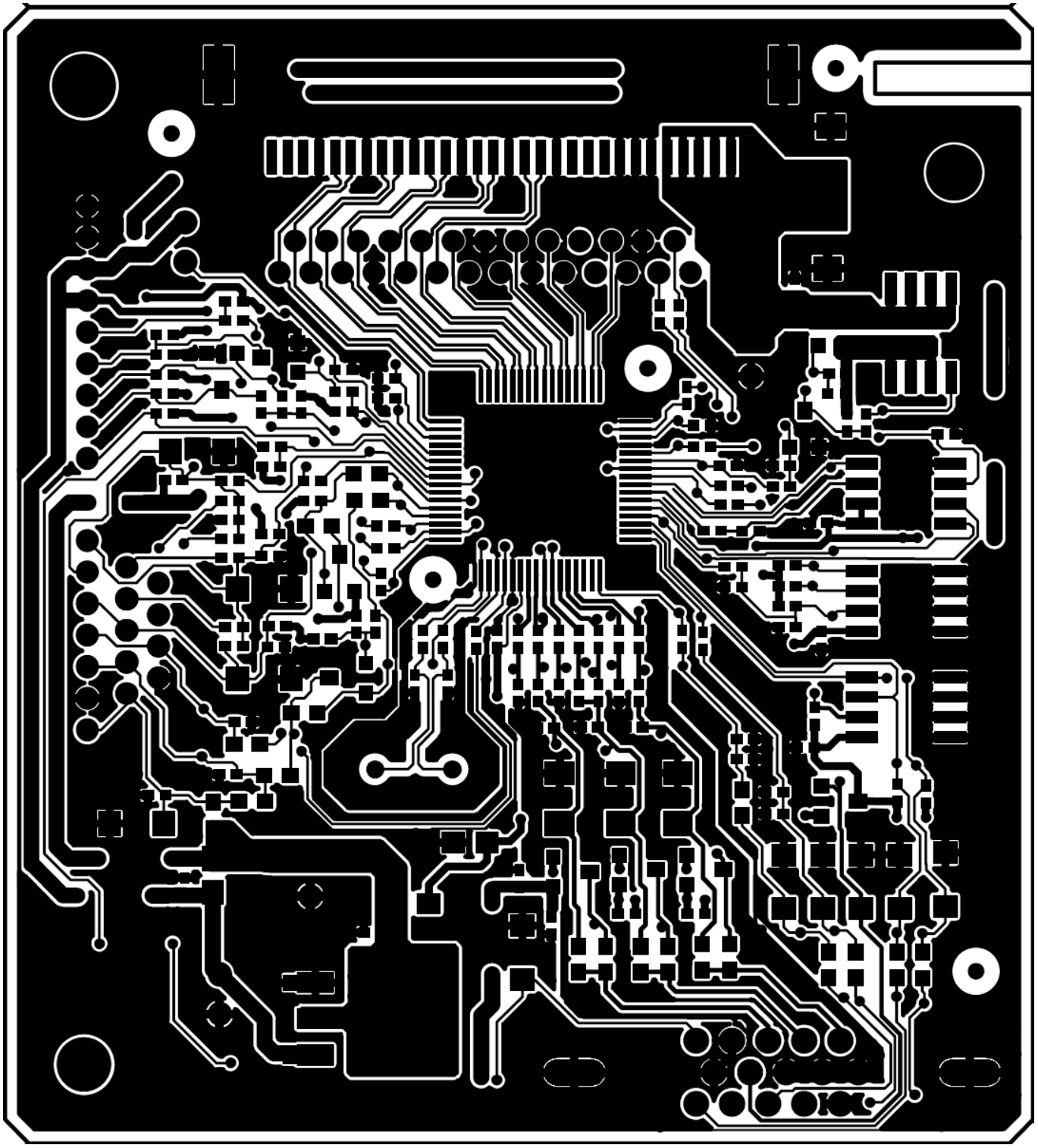

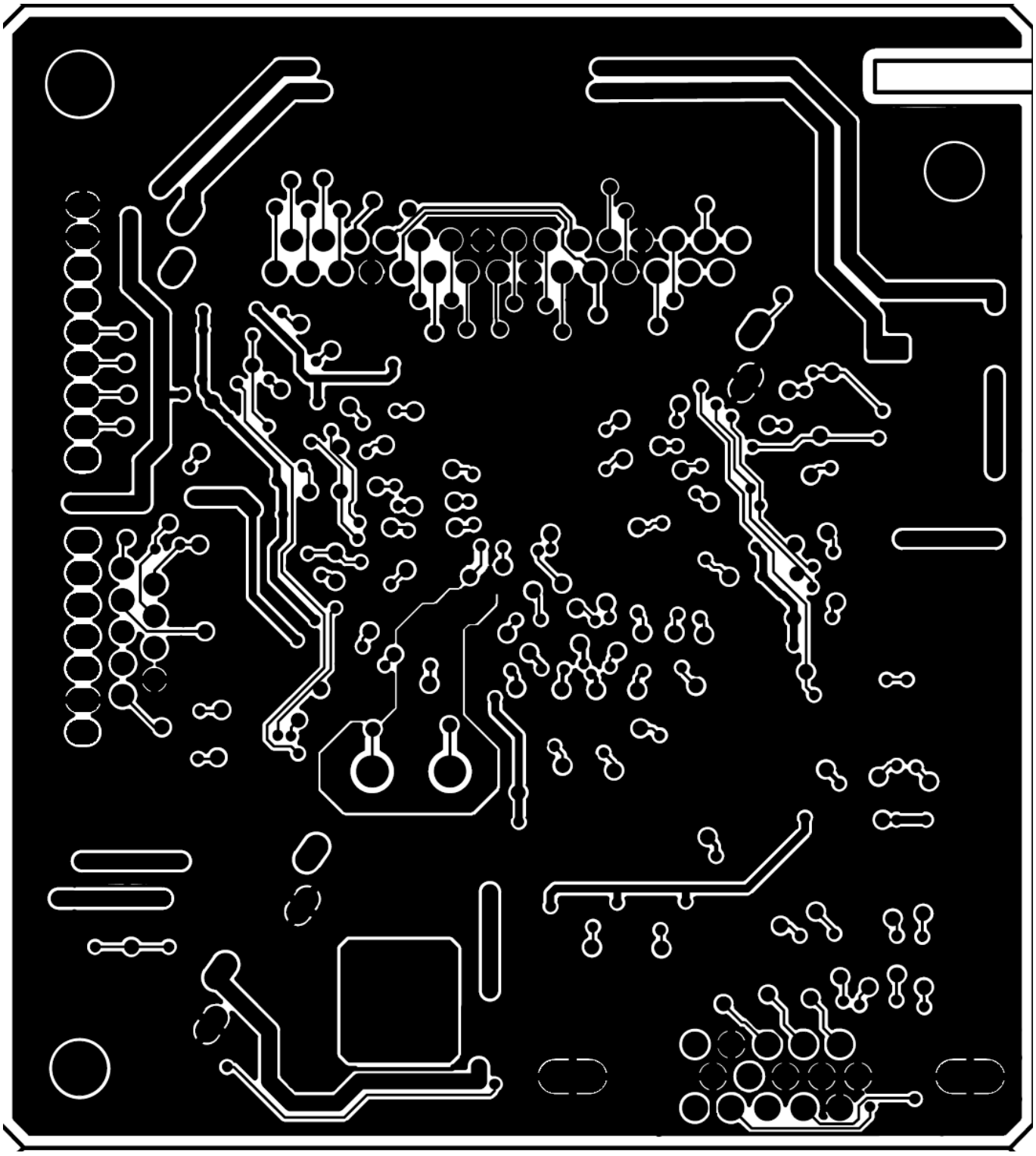

Power Board

G950A/G950AM

715G5000P01001003H

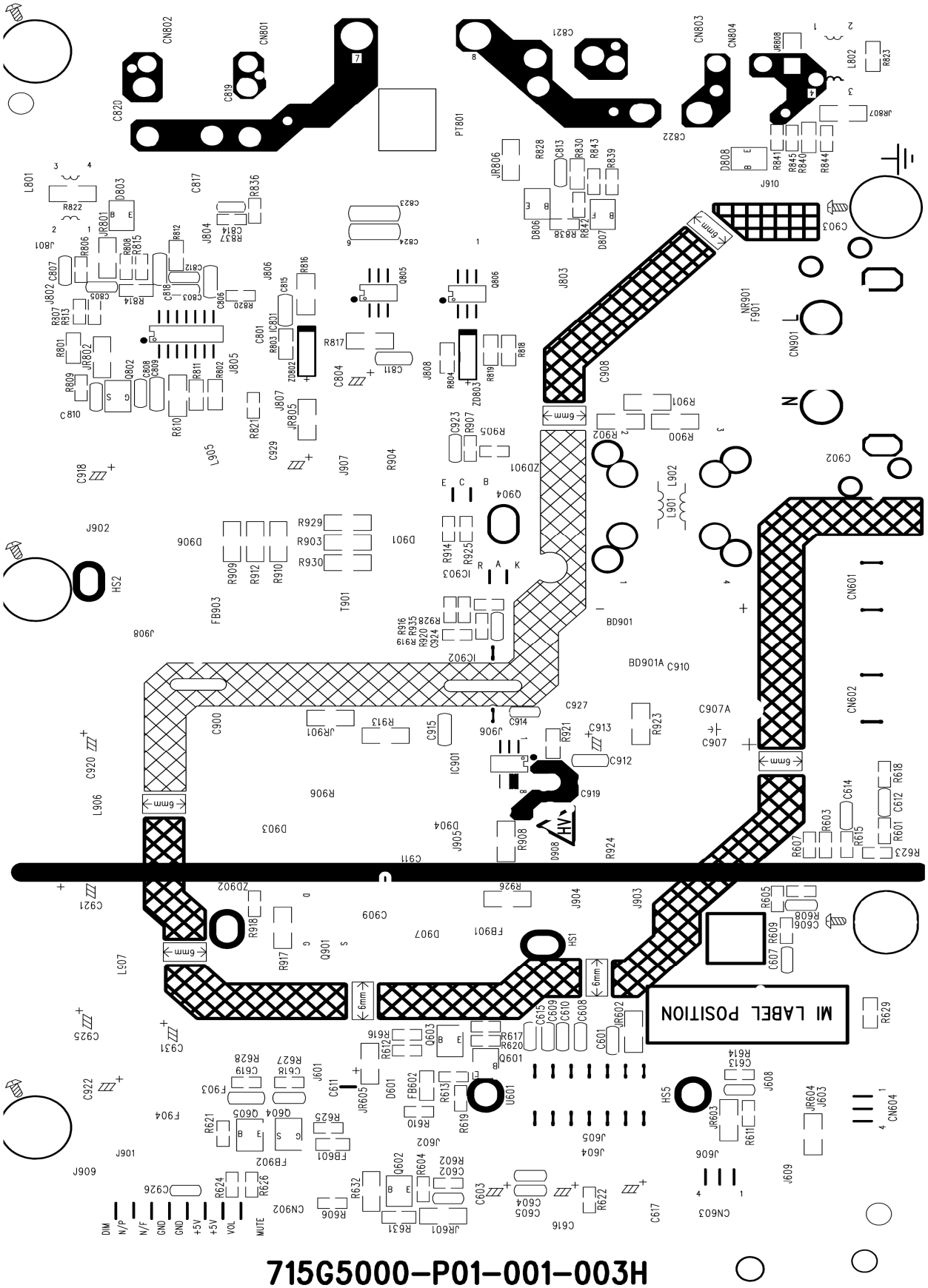

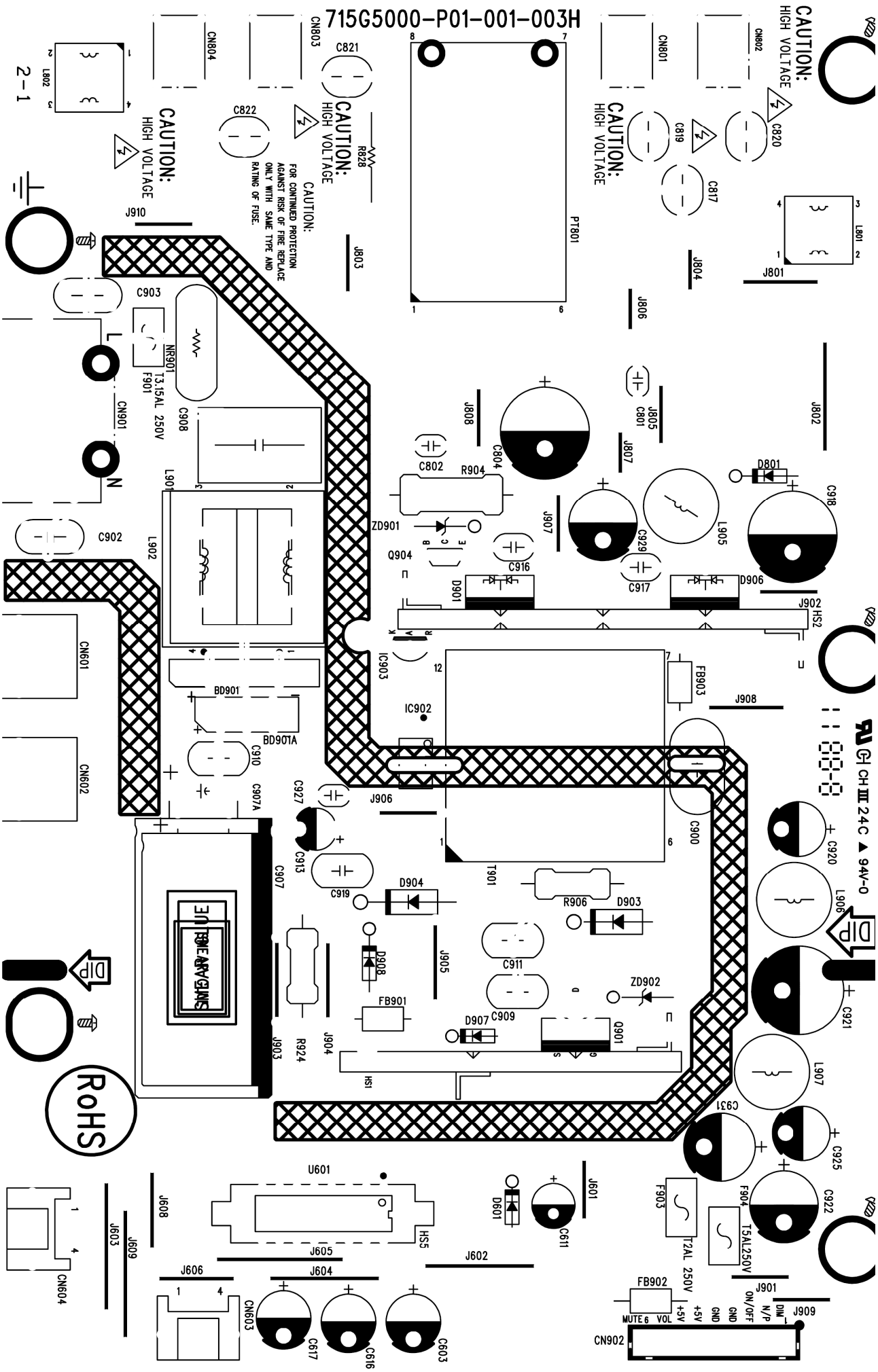
715G5000-P01-001-003H
CAUTION:
HIGH VOLTAGE
CAUTION:
FOR CONTINUED PROTECTION AGAINST RISK OF FIRE REPLACE ONLY WITH SAME TYPE AND RATING OF FUSE.
2-1
RoHS
DIP
CH III 24C ▲ 94V-0
PT801
T901
IC902
IC903
U601
CN902
CN603
CN604
CN601
CN602
CN901
J801
J802
J803
J804
J805
J806
J807
J808
J901
J902
J903
J904
J905
J906
J907
J908
J909
J910
J601
J602
J603
J604
J605
J606
J608
J609
L801
L802
L901
L902
L905
L906
L907
NR901
T3.15AL 250V
F901
T2AL 250V
T5AL250V
F903
F904
FB901
FB902
FB903
BD901
BD901A
ZD901
ZD902
Q904
Q901
D801
D901
D903
D904
D906
D907
D908
D601
HS1
HS2
HS5
MUTE
VOL
+5V
GND
ON/OFF
N/P
DIM

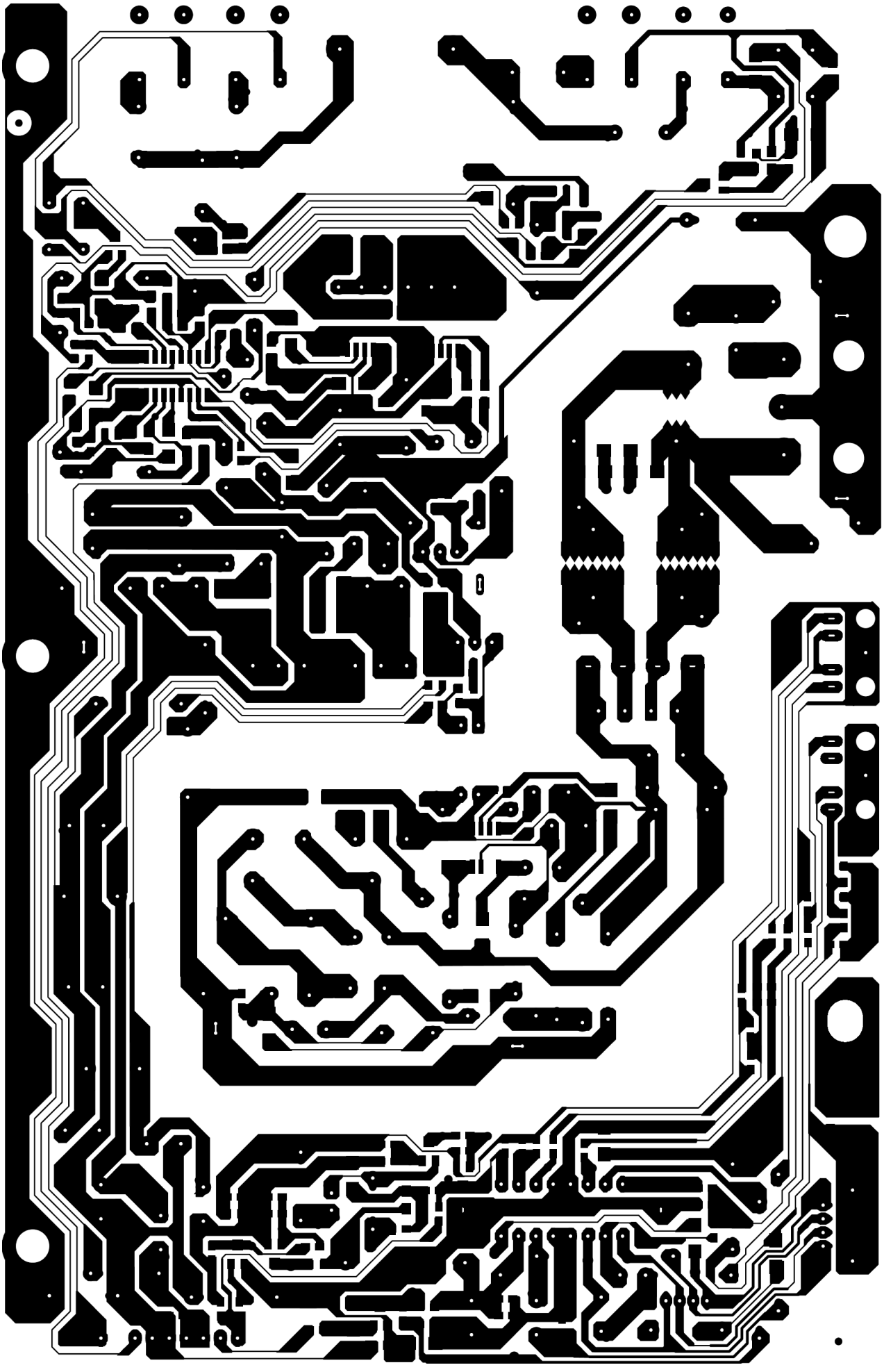

GL950A/GL950AM

715G5000P01000003H

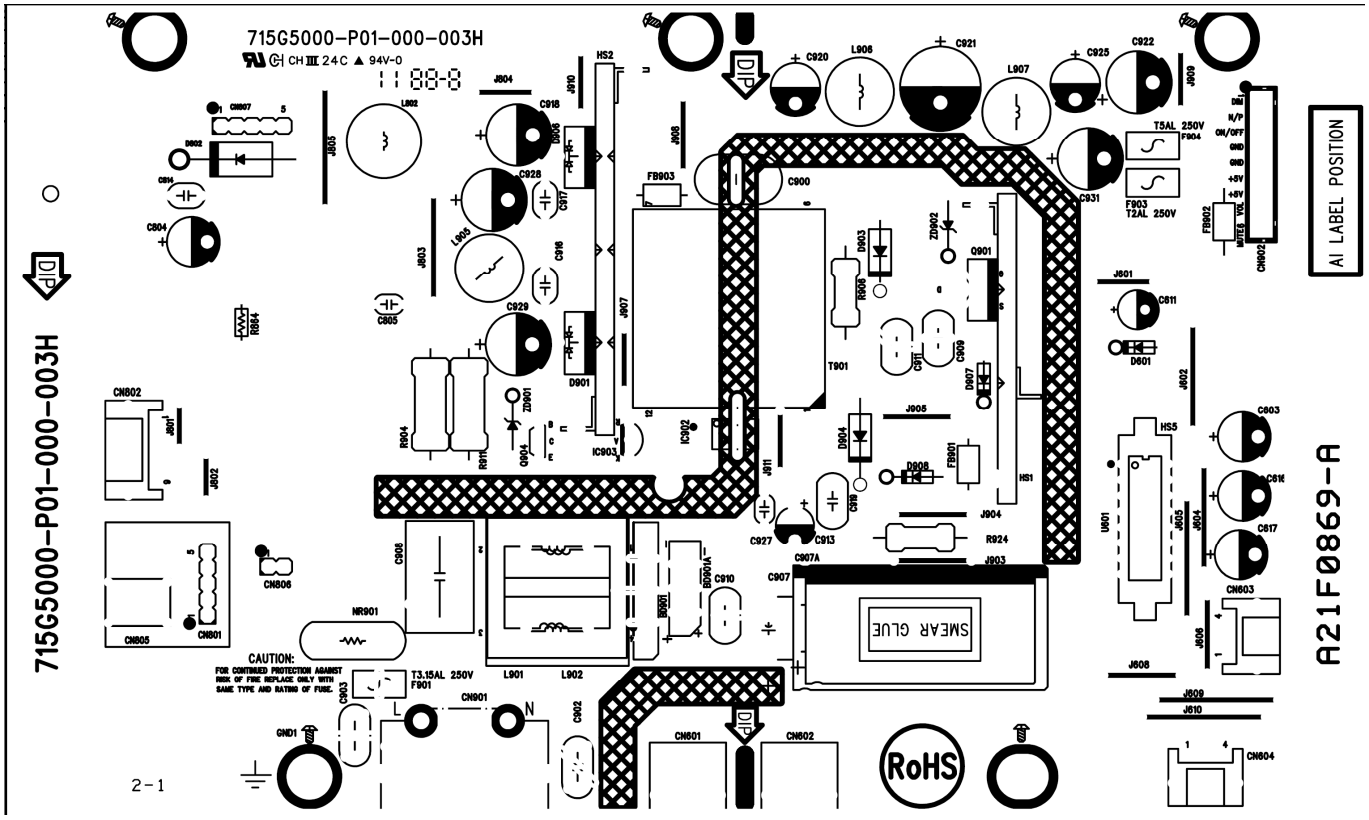

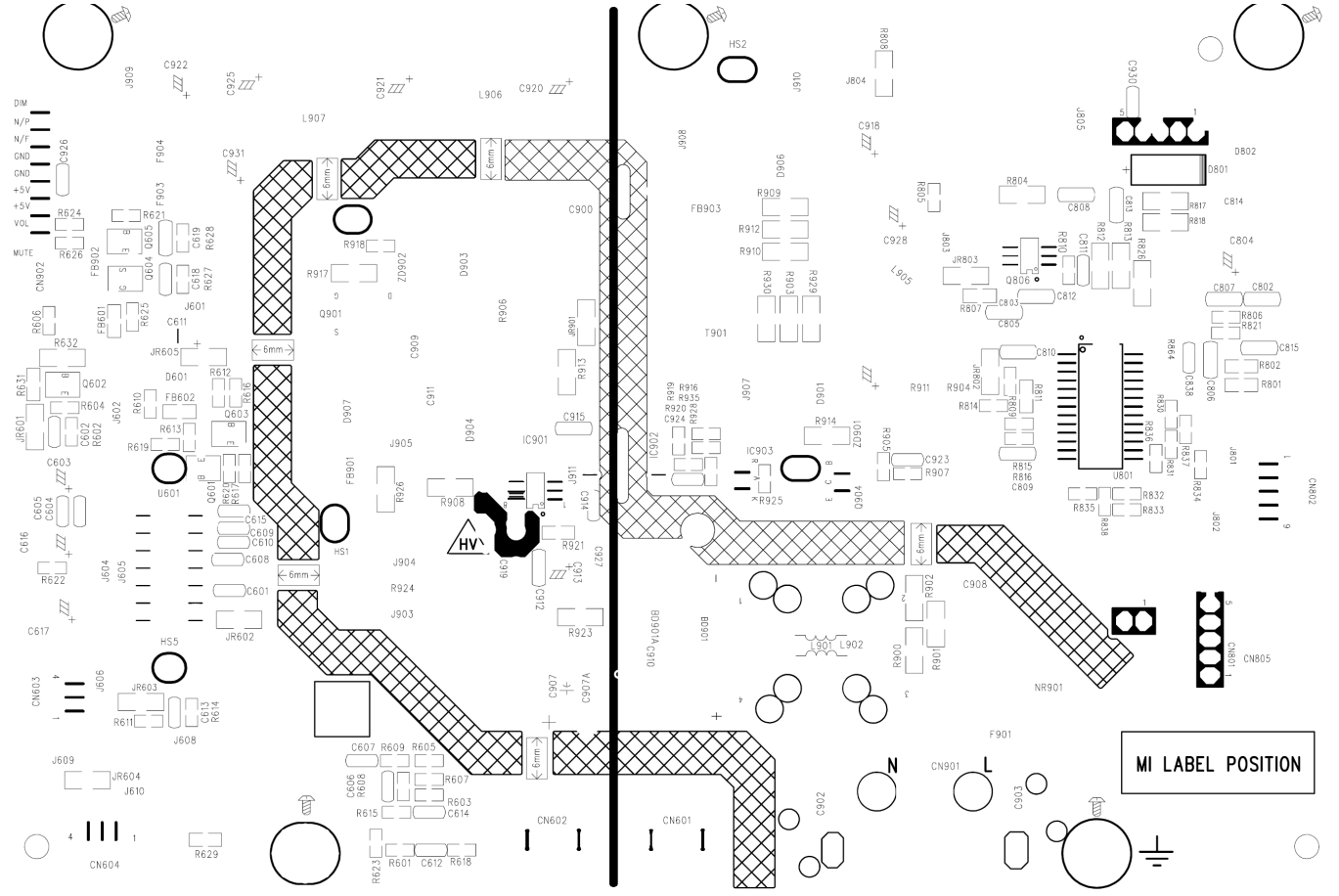

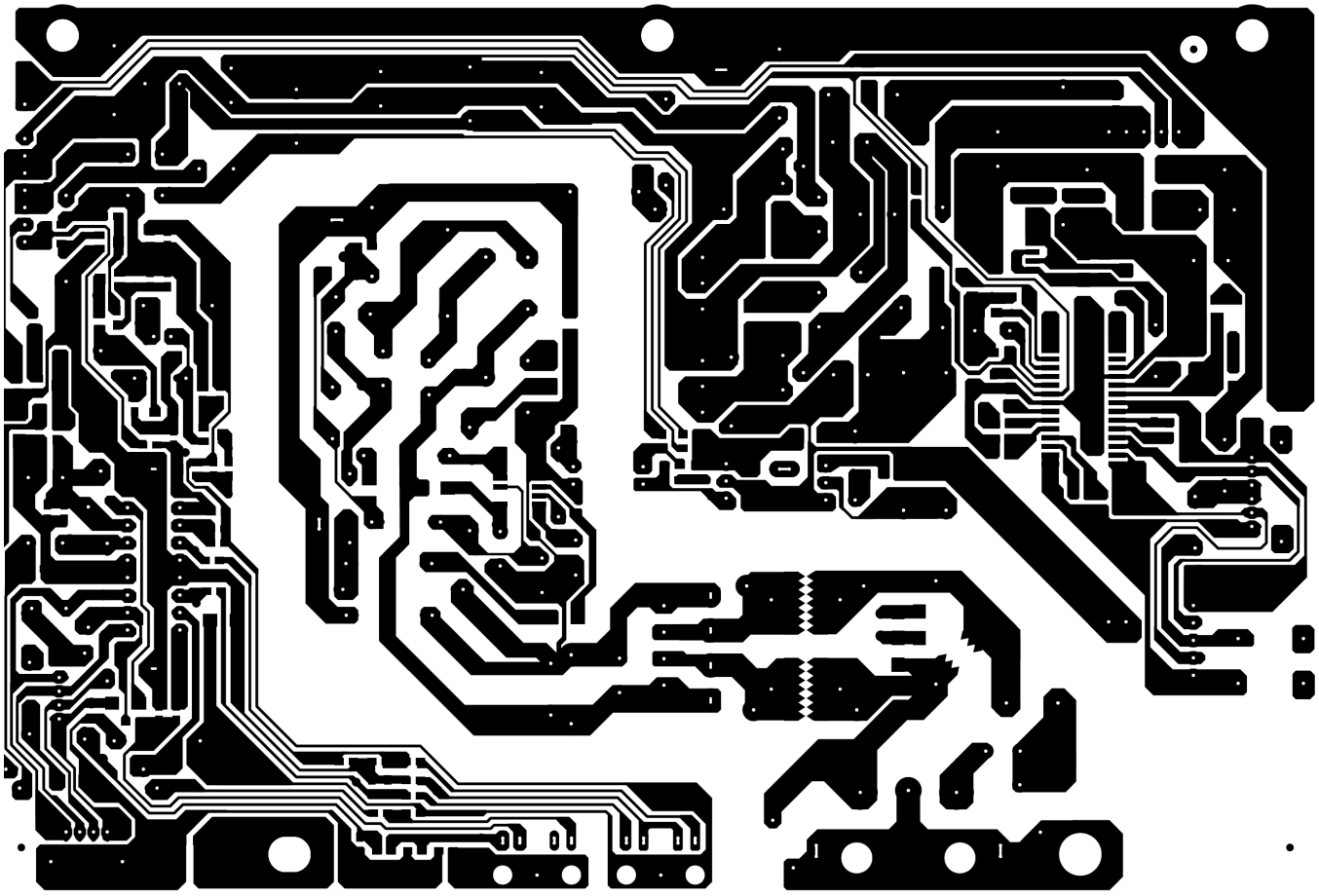

Key Board

715G5048K0C000004I

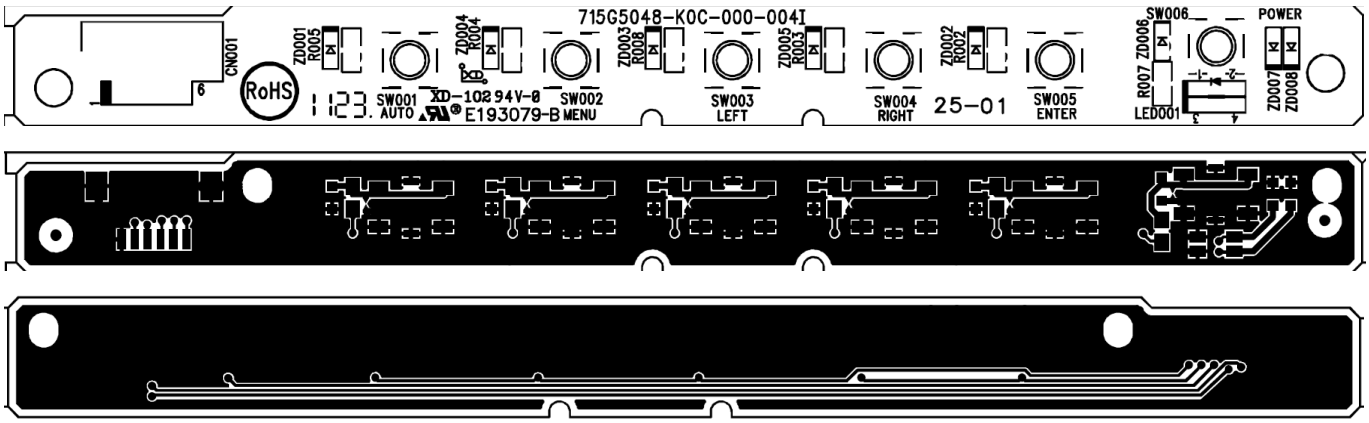

Appendix 1 – Screw List / Torque

Part No.	Type	Description	Quantity	Torque
0D1G1030 6120	D3*6	POWER BOARD & MAINFRAME	2	6 ± 1kgf.cm
0M1G1740 8120	M4*8	POWER BOARD & MAINFRAME	1	6 ± 1kgf.cm
0D1G1030 6120	D3*6	MAIN/POWER BOARD & MAINFRAME	4	6 ± 1kgf.cm
AM1G1740 10 47 CR3	M4*10	STAND & HINGE	3	
0M1G 130 12 47 CR3	M3*12	MAIN FRAME & REAR COVER	2	