Model Name: GA-H61M-S2PV

Revision 2.2

SHEET	TITLE
01	COVER SHEET
02	BOM & PCB MODIFY HISTORY
03	BLOCK DIAGRAM
04	CPU_LGA1155-A
05	CPU_LGA1155-B
06	CPU_LGA1155-C
07	DDR III CHANNEL A
08	DDR III CHANNEL B
09	PCH_FDI,DMI,USB,PCIE,NVRAM
10	PCH_DP,CLK BUFFER
11	PCH_HOST,SATA,PCI
12	PCH_GPIO,CTRL,AUDIO
13	PCH_PWR,GND
14	PCI EXPRESS*16 SLOT
15	PCI EXPRESS*1 SLOT
16	IT8892E
17	PCI SLOT1&2
18	ITE 8728 LPC IO
19	COM,KB_USB,USB_ESATA,-PROCHOT
20	HWM,FAN CTRL,OV,
21	DUAL BIOS
22	FP,FUSB,SPK,SATALED
23	Realtek ALC887-VD2
24	REAR AUDIO JACK
25	REALTEK RTL8111F-VL
26	DISCRETE POWER
27	ATX

SHEET	TITLE
28	LINEAR CPU_VTT
29	VCORE ISL95836_1
30	VCORE ISL95836_2
31	VCORE ISL95836_3
32	LPT
33	DVI

Model Name: GA-H61M-S2PV

Revision 2.2

Component value change history

2013/07/25

Data	Change Item	Reason
2011/06/09	MODIFY FROM H61M-D2P-B3 R1.01. VCORE 3PHASE.LAN/CODEC.PCIE*1.	PBOM:9M61MS2PB-00-10B
2011/07/05	Update Rev: 1.1 Cost Down	
	Model Name Remove "-B3"	
2011/07/26	Model Name ADD "-B3"	
2011/08/04	P-BOM 9M61MS2PB-00-11B	
	Codec Change VIA VT2021	
2011/08/15	Rev: 1.2.LAN Change Realtek RTL8111E-VL.	
	Codec Change Realtek ALC887-VD2.Co-Lay IT8893.	
2011/09/07	R2.0.Add DVI PORT.COM Port Move to Fornt.	
2011/10/27	R2.01 ,PWM VCORE ISL95836+ISL6208B.	
	VTT/DDR RT8120.CODEC ALC887-VB2.COST DOWN.	
2011/10/27	R2.0 RENAME FROM H61M-S2P-B3 R2.01,Add DVI PORT.COM Port Move to Fornt.	
2011/11/29	R2.01 UPDATE ISL95836 CIRCUIT.	PBOM:9M61M2PV-00-20B.
2011/12/07	ECN U6 CHANGE RT9199.	
2011/12/08	MODIFY ISL95836 RC MATCH.	FPBOM:9M61M2PV-00-20C.
2011/12/21	MODIFY IT8728/EX.	PBOM:9M61M2PV-00-20D.
2012/01/17	ADD NXP LEVEL SHIFTER PTN3360BBS.	
2012/03/20	FOR JCH REMOVE DDR3 SOCKET LOTES.	PBOM:9M61M2PV-00-20E.
2012/04/27	FIX PWM O.V CIRCUIT FB FAIL, MODIFY LOAD LINE.	FPBOM:9M61M2PV-00-20F.
2012/05/25	MODIFY LAN REALTEK RTL8111F.ADD 4.7U/6 FOR POWER SUPPLY.	BOM:9M61M2PV-00-21A.
2012/06/19	PBOM.	PBOM:9M61M2PV-00-21A.
2012/07/09	R2.11.ADD CPU/SYS FAN +12V 防燒.	
2012/07/11	UPDATE DVI EMI .	
2012/07/31	PBOM.	PBOM:9M61M2PV-00-21B.
2012/12/18	R2.2.Vtt change to linear power.VCORE/VAXG/VTT MOS HI/LO SIDE*1.10U-->0603.	
2013/01/14	PBOM.VCC1_05V-->1.1V.PROCHOT FINE TUNE.BC152.	PBOM:9M61M2PV-00-22B.
2013/07/25	REMOVE R177 FOR RED HDLED.	PBOM:9M61M2PV-00-22C.

Circuit or PCB layout change

DATE	Change Item	Reason

BLOCK DIAGRAM

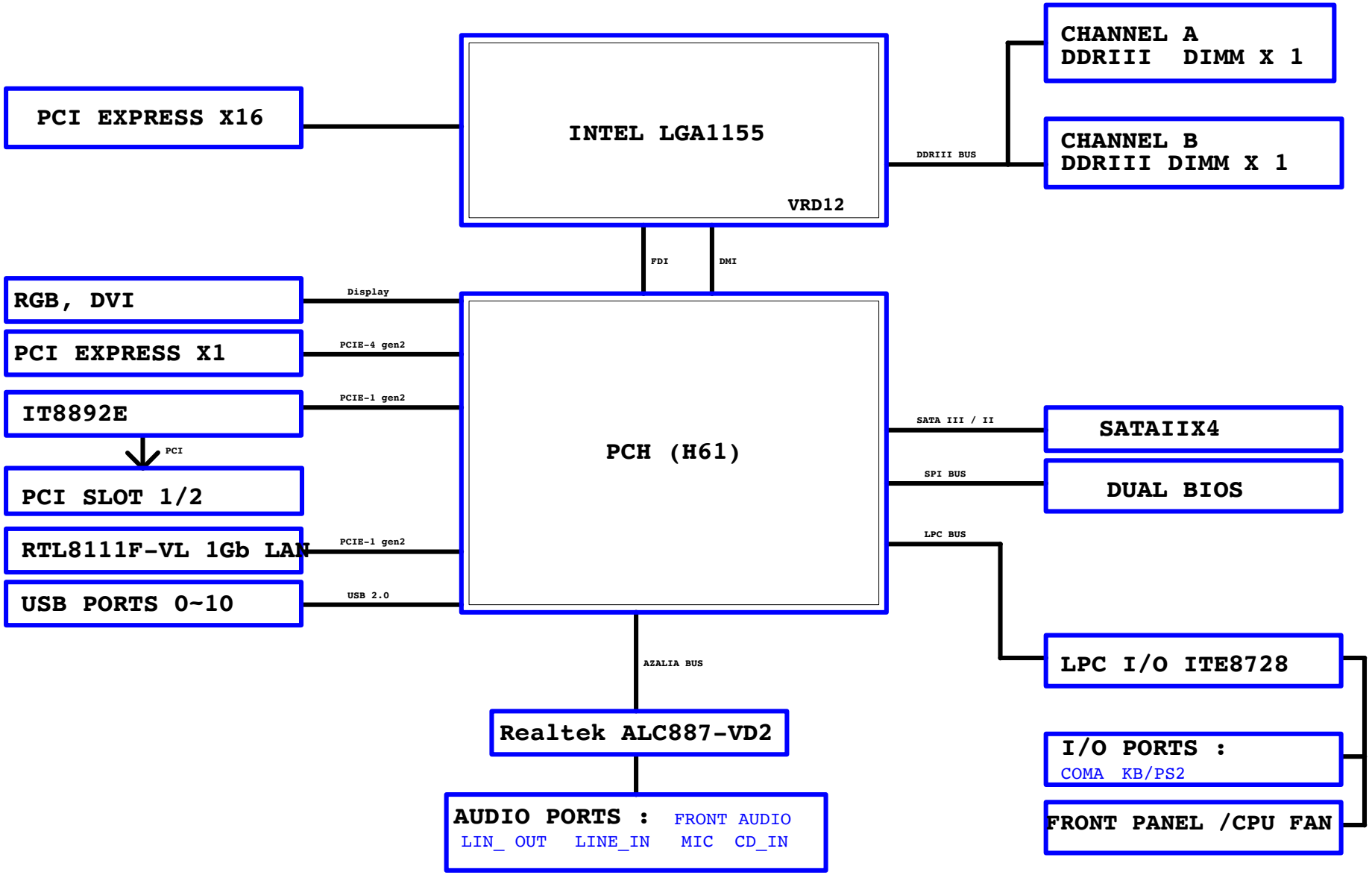

Gigabyte Technology			
Title	BLOCK DIAGRAM		
Size C	Document Number GA-H61M-S2PV		Rev 2.2
Date: Thursday, July 25, 2013	Sheet 3 of 33		

CPU E

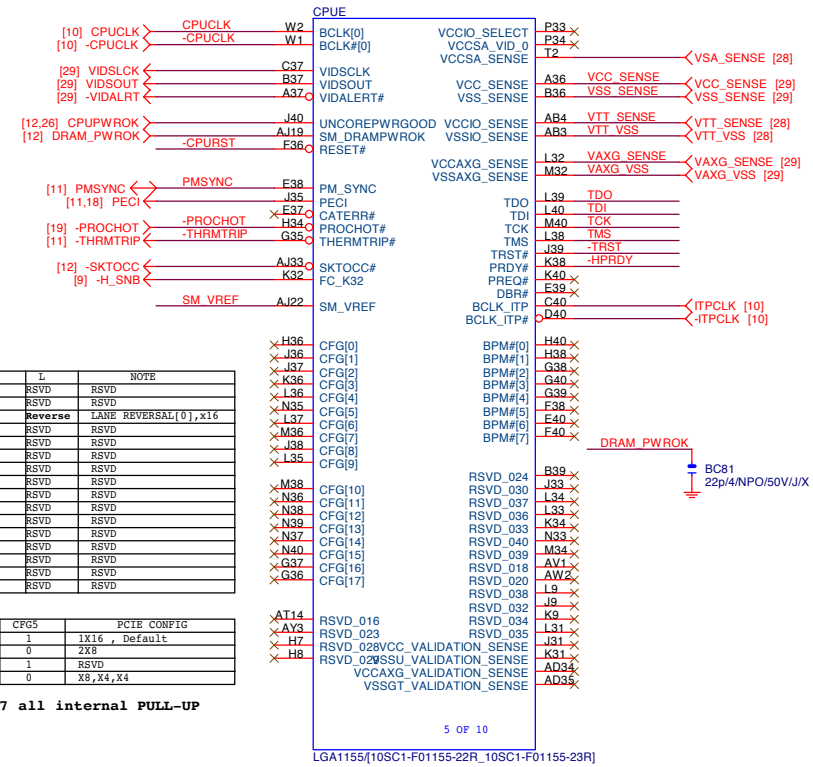

CFG	H	L	NOTE
0	RSVD	RSVD	RSVD
1	RSVD	RSVD	RSVD
2	**NORM**	**Reverse**	LANE REVERSAL[0],x16
3	RSVD	RSVD	RSVD
4	RSVD	RSVD	RSVD
7	RSVD	RSVD	RSVD
8	RSVD	RSVD	RSVD
9	RSVD	RSVD	RSVD
10	RSVD	RSVD	RSVD
11	RSVD	RSVD	RSVD
12	RSVD	RSVD	RSVD
13	RSVD	RSVD	RSVD
14	RSVD	RSVD	RSVD
15	RSVD	RSVD	RSVD
16	RSVD	RSVD	RSVD
17	RSVD	RSVD	RSVD

CFG6	CFG5	PCIE CONFIG
1	1	1X16 , Default
1	0	2X8
0	1	RSVD
0	0	X8,X4,X4

CFG 0-17 all internal PULL-UP

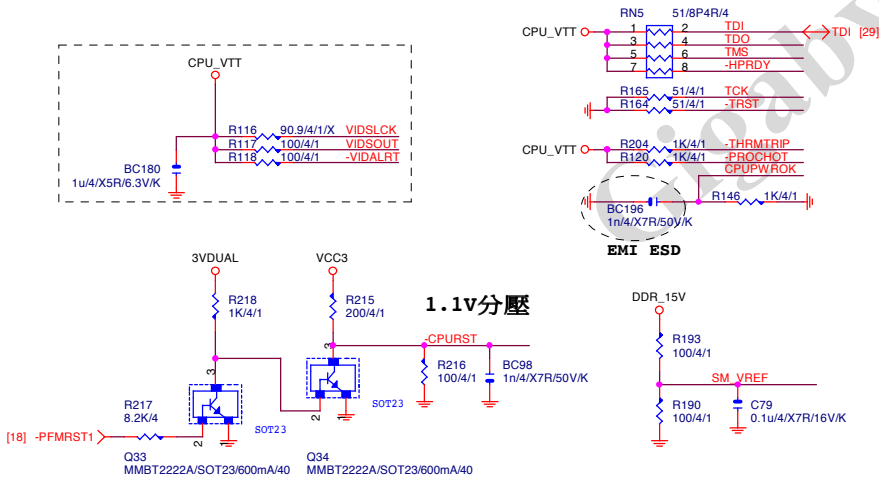

CPU D FDI

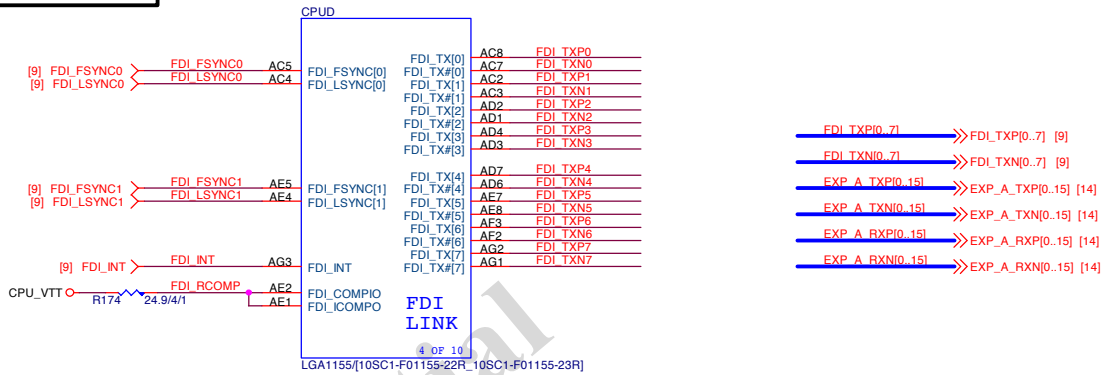

CPU C

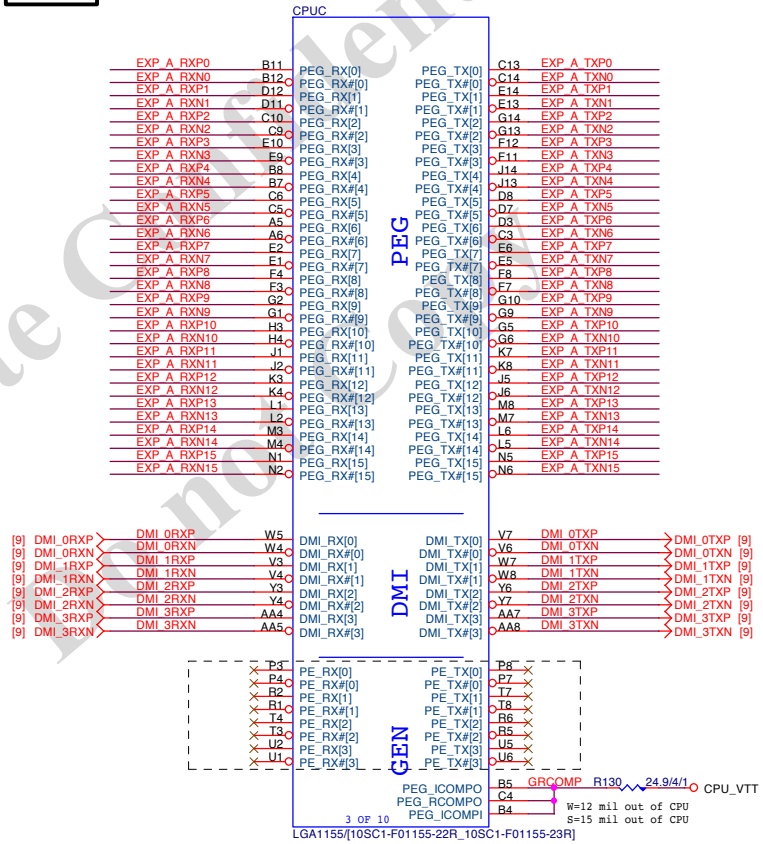

STITCHING CAP.

N/A

Stitching caps for PCIE,DMI,FDI bus

Gigabyte Confidential
Do not copy

Gigabyte Technology			
Title	CPU LGA1155-A		
Size Custom	Document Number GA-H61M-S2PV		Rev 2.2
Date: Thursday, July 25, 2013	Sheet 4 of 33		

CPU A

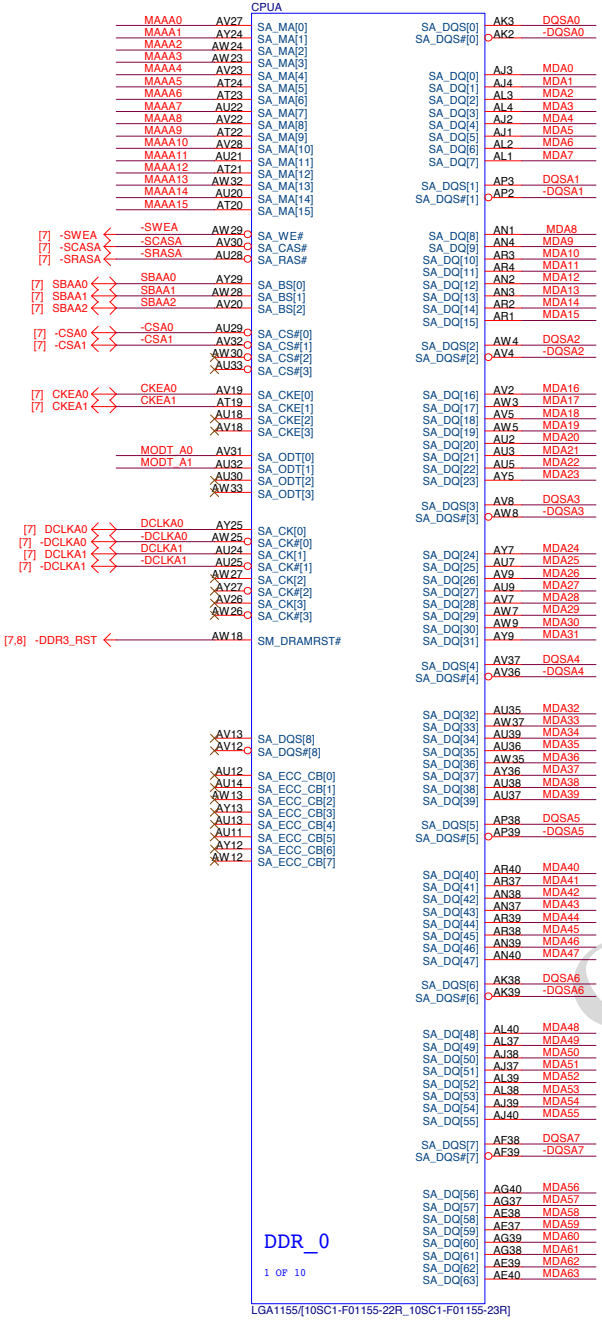

CPU B

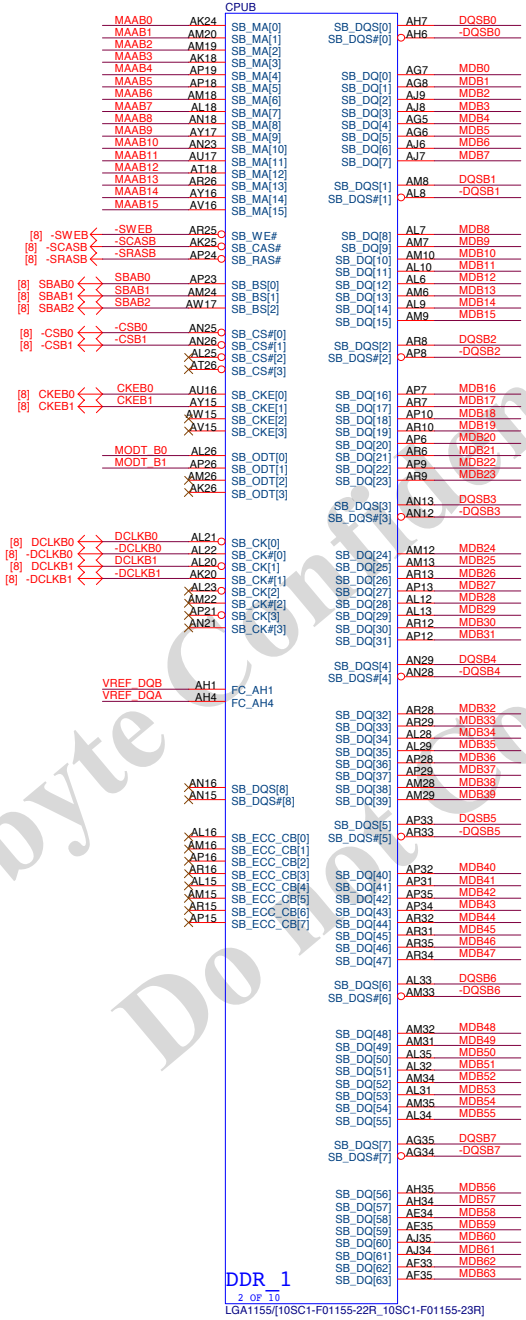

CPU SOCKET

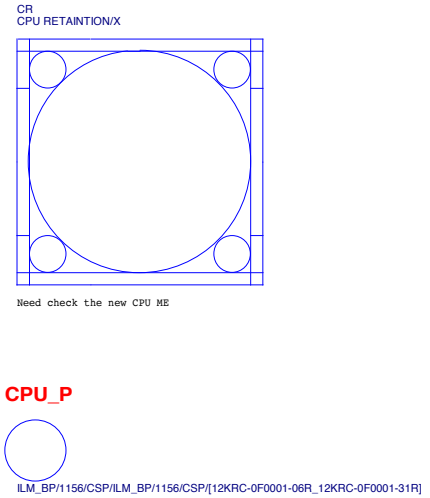

DDR SIGNAL

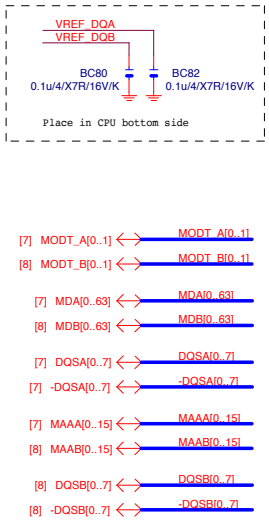

Gigabyte Confidential
Do Not Copy

Gigabyte Technology			
Title	CPU LGA1156-B		
Size Custom	Document Number GA-H61M-S2PV		Rev 2.2
Date: Thursday, July 25, 2013	Sheet 5 of 33		

CPU F,G,H POWER

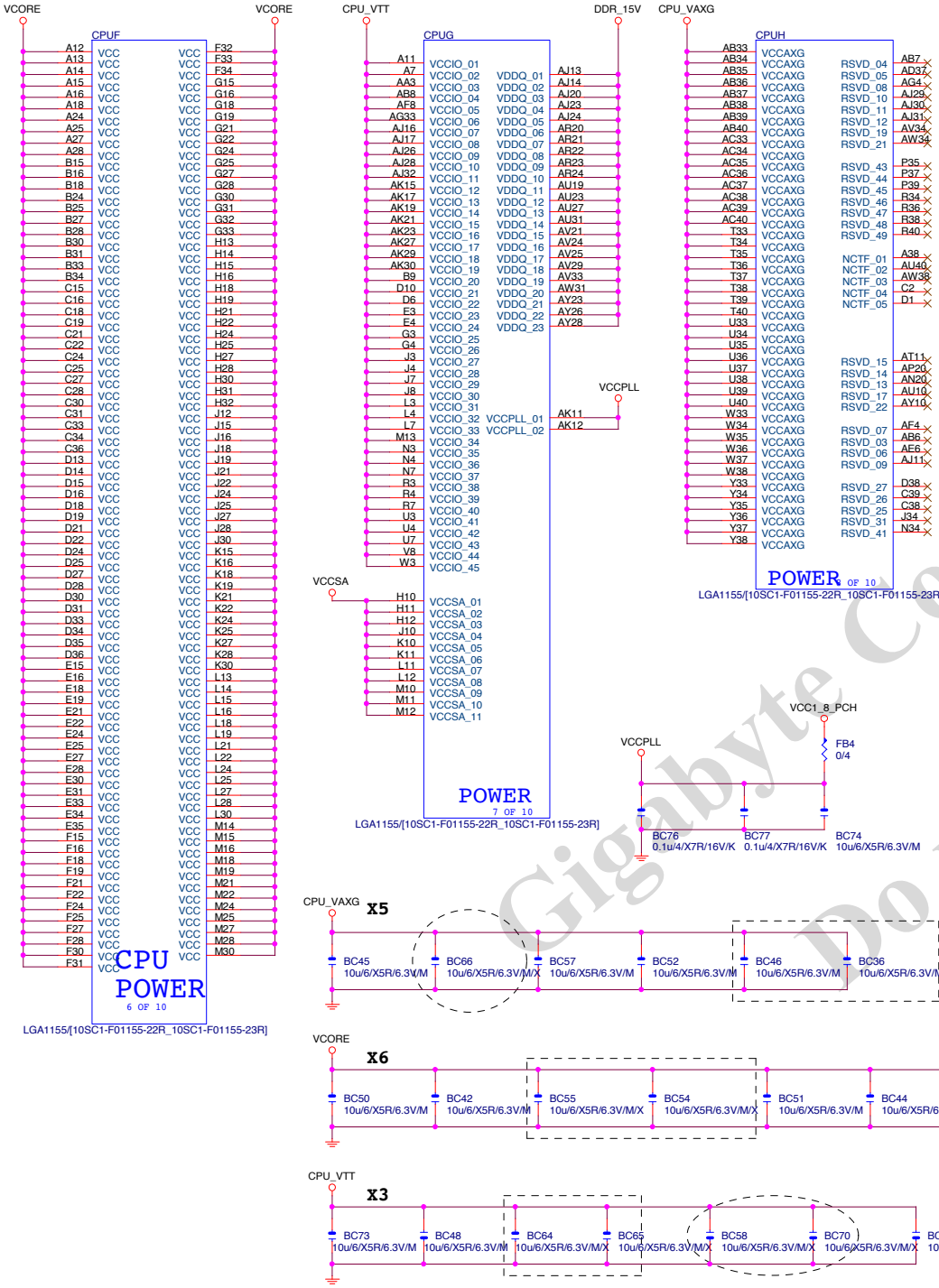

CPU I,J GND

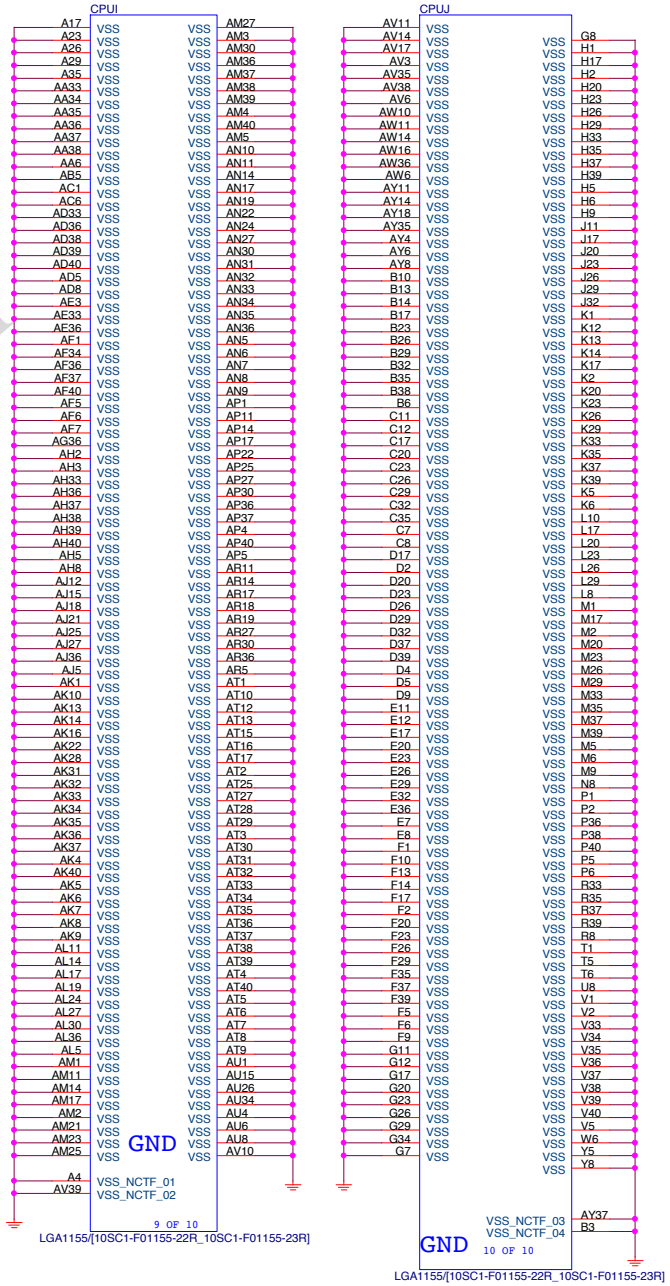

Gigabyte Confidential
Do not Copy

Gigabyte Technology	
Title	CPU LGA1156-C
Size Custom	Document Number GA-H61M-S2PV
Rev	2.2
Date: Thursday, July 25, 2013	Sheet 6 of 33

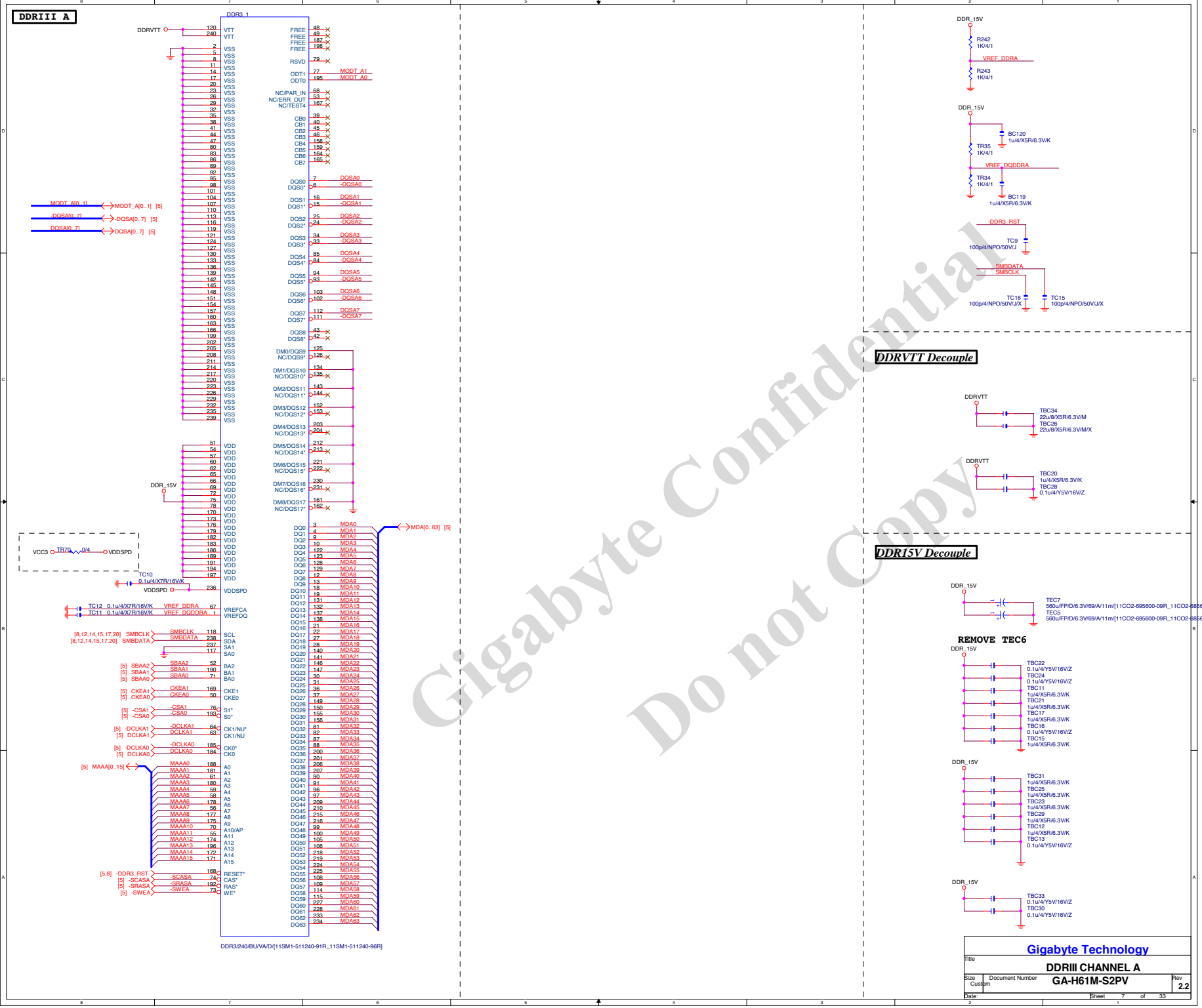

Gigabyte Confidential
Do not Copy

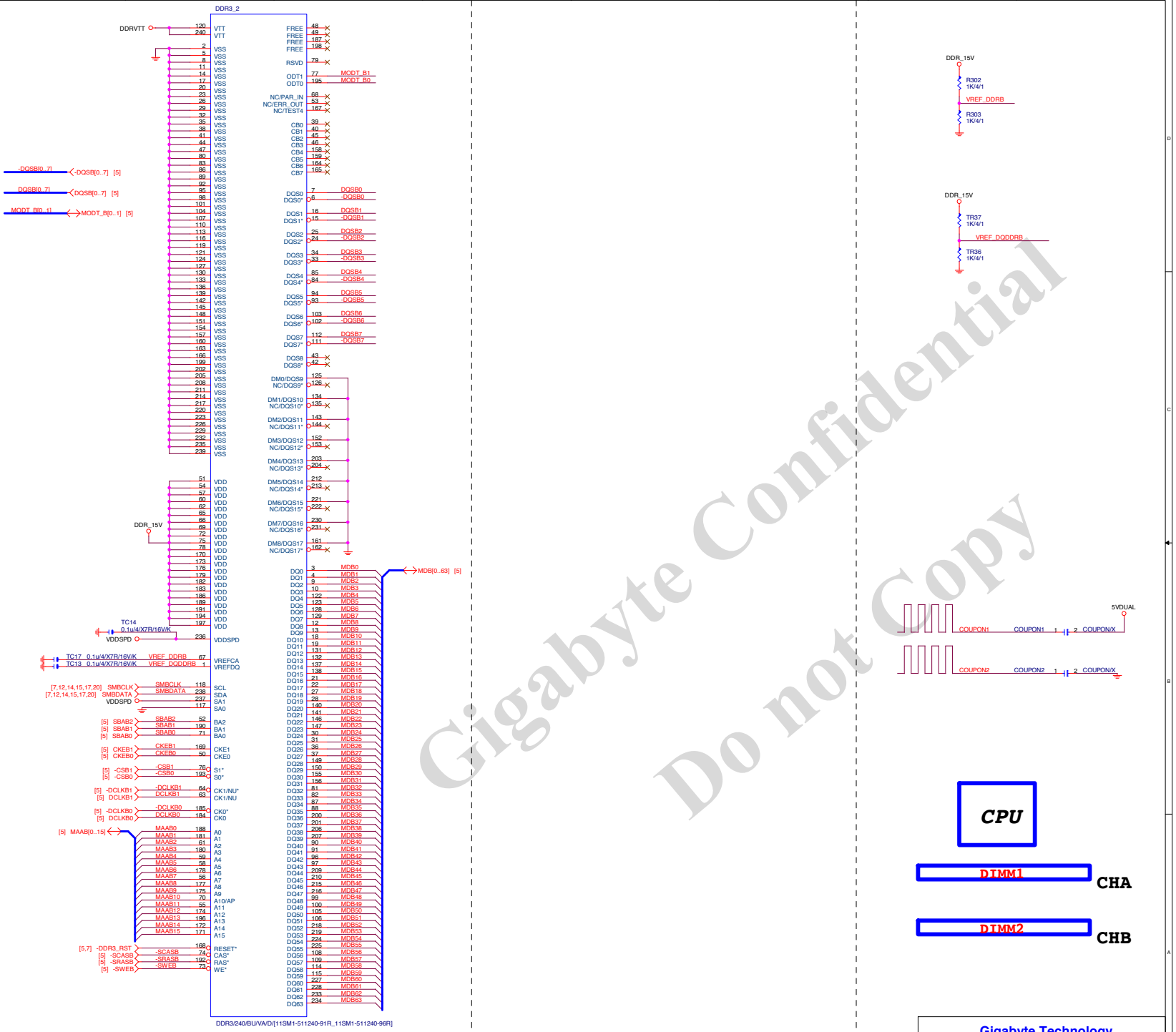

Gigabyte Confidential
Do not Copy

Gigabyte Technology	
Title	DDRIII CHANNEL B
Size Custom	Document Number GA-H61M-S2PV
Rev	2.2
Date:	Sheet 8 of 33

PCH B

H67: USB2.0 X14
B65: USB2.0 X12[6/7 PORT-->N/A]
H61: USB2.0 X10[6/7/12/13 PORT-->N/A]

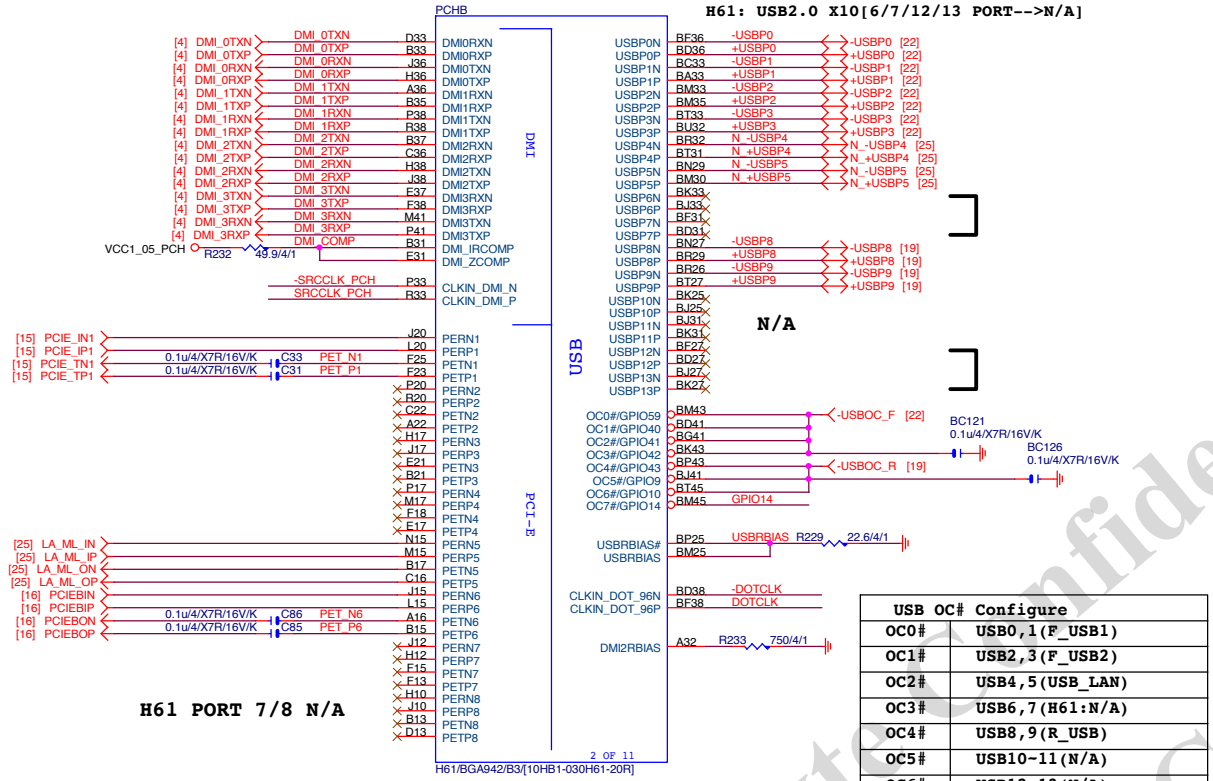

H61 PORT 7/8 N/A

USB OC# Configure	
OC0#	USB0,1(F_USB1)
OC1#	USB2,3(F_USB2)
OC2#	USB4,5(USB_LAN)
OC3#	USB6,7(H61:N/A)
OC4#	USB8,9(R_USB)
OC5#	USB10~11(N/A)
OC6#	USB12~13(N/A)
OC7#	GPIO14

PCH G FDI

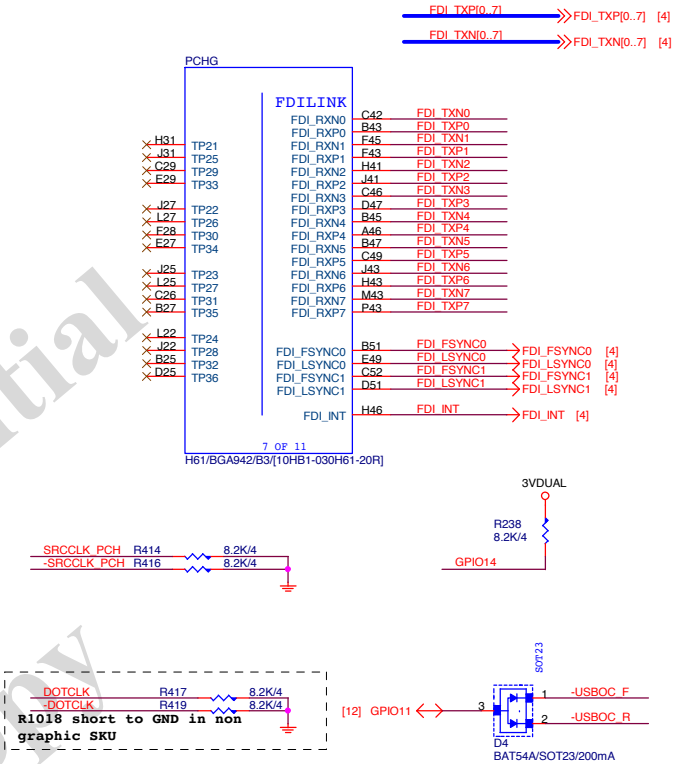

FOR FUSE SHORT GPIO

PCH E

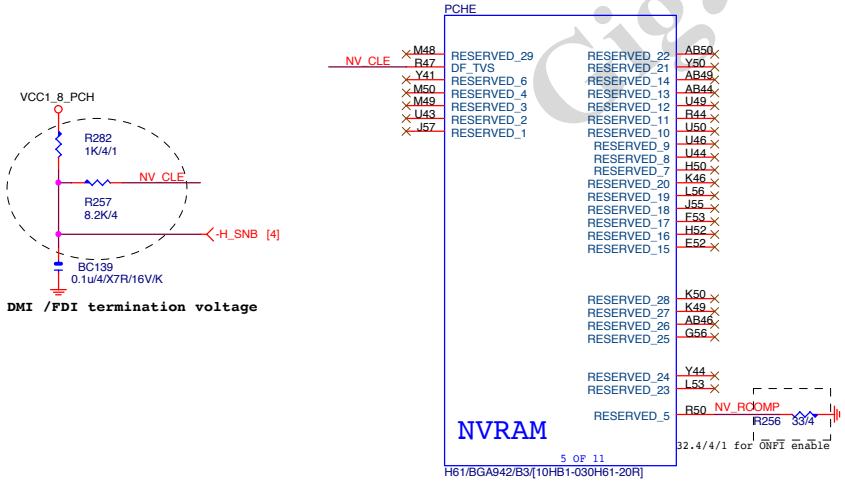

DMI /FDI termination voltage

PCH HS

LOW COST ICH7 HEATSINK

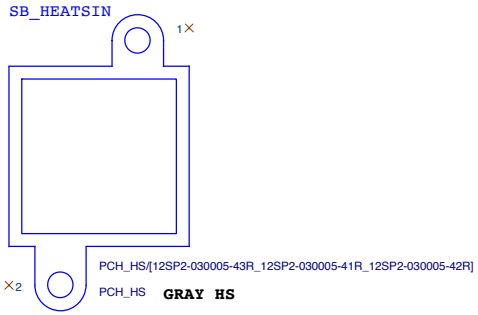

GRAY HS

Gigabyte Confidential Do not Copy

Gigabyte Technology			
Title	PCH FDI,DMI,USB ,PCIE,NVRAM		
Size Custom	Document Number GA-H61M-S2PV		Rev 2.2
Date: Thursday, July 25, 2013	Sheet 9 of 33		

PCH F DISPLAY

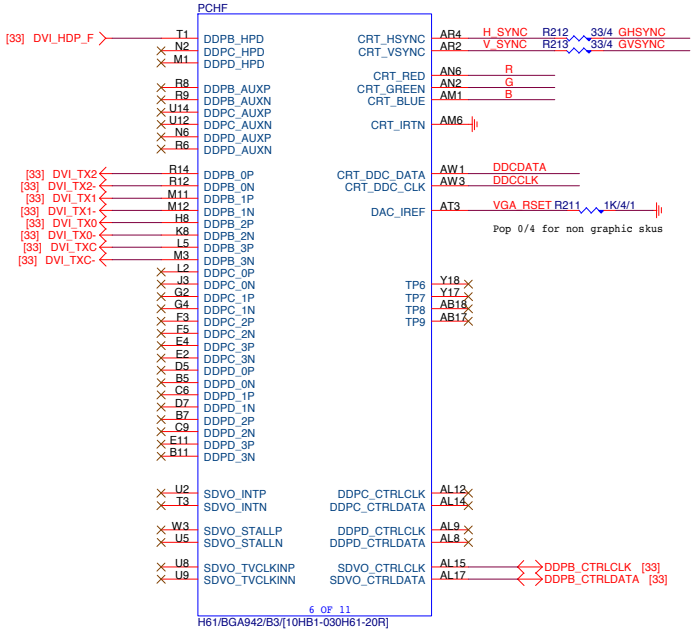

PCH H CLK BUFFER

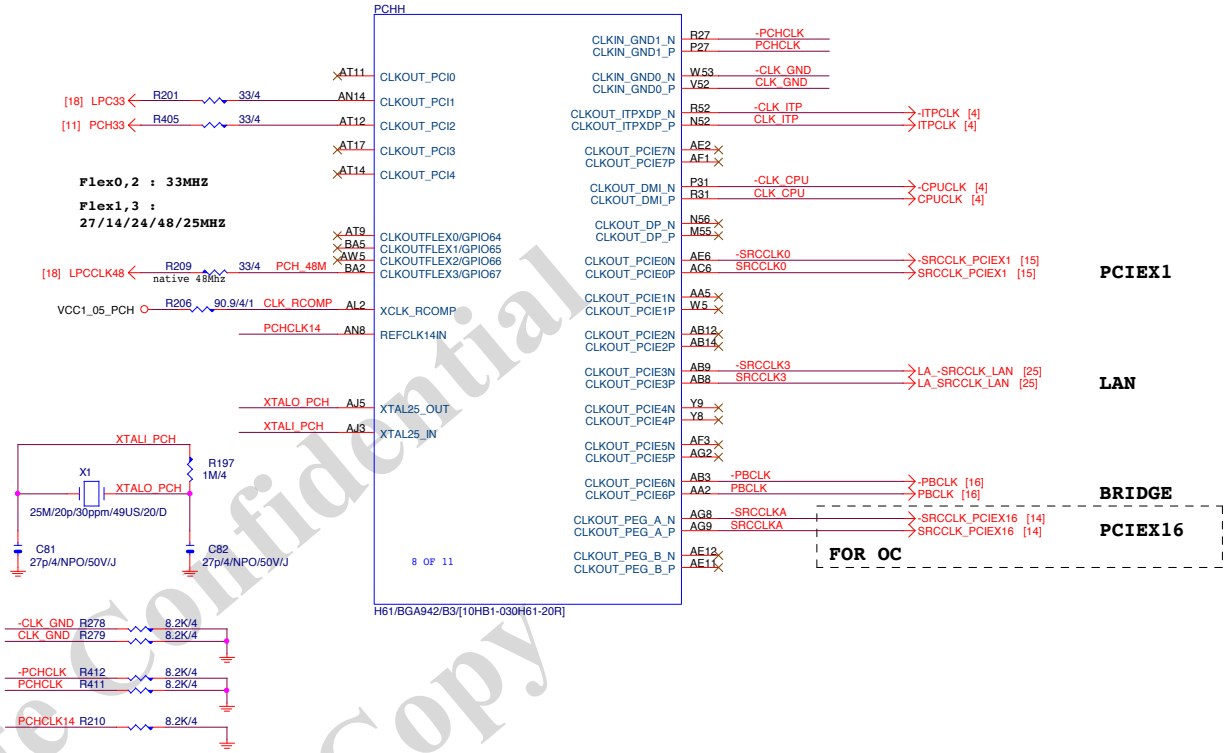

VGA ESD

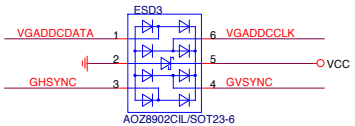

SSOP6_ESD

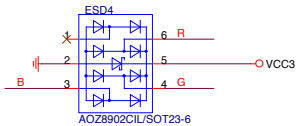

VGA SIGNAL

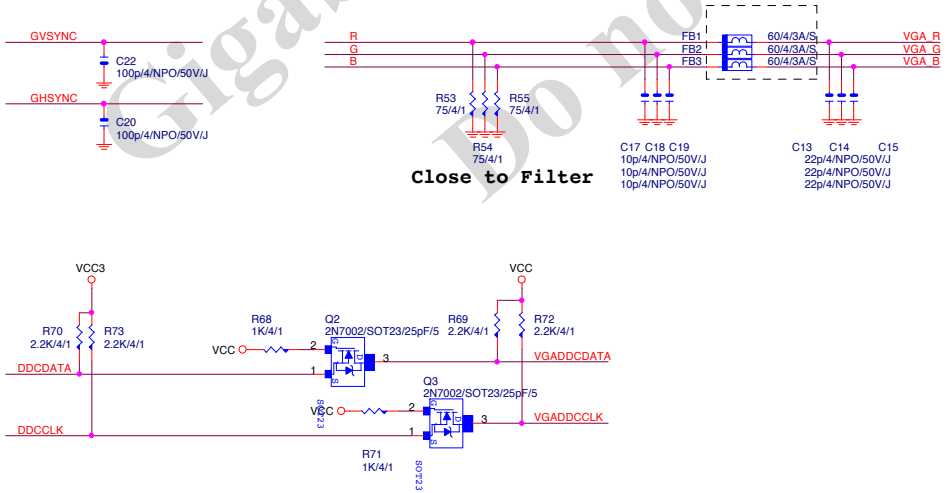

D-SUB

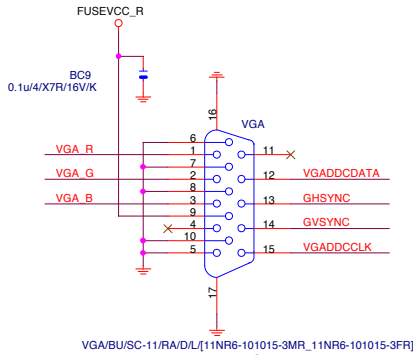

Title	PCH DISPLAY ,CLK BUFFER		
Size Custom	Document Number GA-H61M-S2PV		Rev 2.2
Date: Thursday, July 25, 2013	Sheet 10 of 33		

Gigabyte Technology

Gigabyte Confidential
Do not Copy

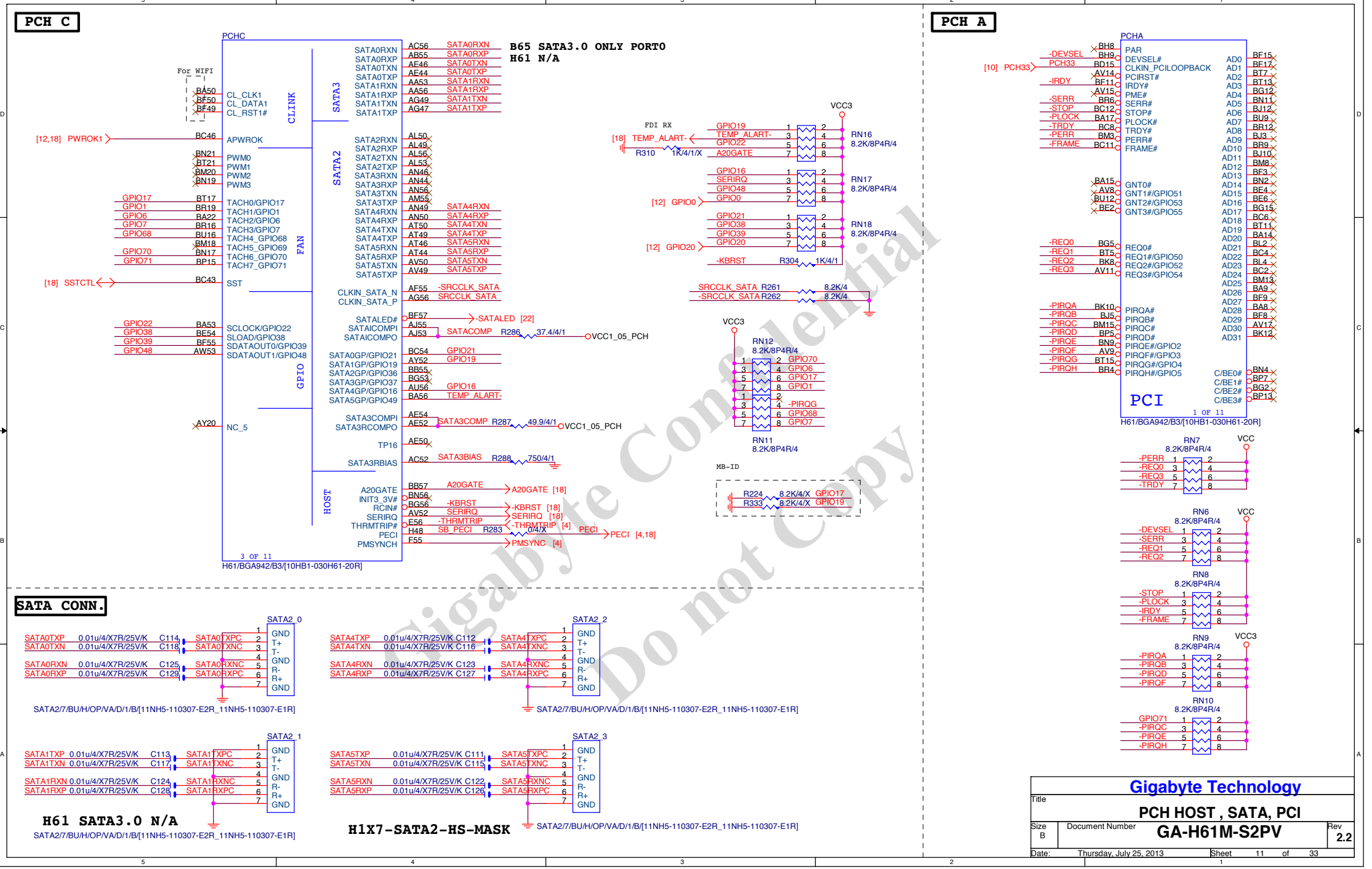
PCH C
PCHC
B65 SATA3.0 ONLY PORT0
H61 N/A
For WIFI
CL_CLK1
CL_DATA1
CL_RST1#
CLINK
APWROK
PWROK1
PWM0
PWM1
PWM2
PWM3
TACH0/GPIO17
TACH1/GPIO1
TACH2/GPIO6
TACH3/GPIO7
TACH4_GPIO68
TACH5_GPIO69
TACH6_GPIO70
TACH7_GPIO71
FAN
SST
SSTCTL
SCLOCK/GPIO22
SLOAD/GPIO38
SDATAOUT0/GPIO39
SDATAOUT1/GPIO48
GPIO
NC_5
SATA3
SATA2
CLKIN_SATA_N
CLKIN_SATA_P
SATALED#
SATAICOMPI
SATAICOMPO
SATA0GP/GPIO21
SATA1GP/GPIO19
SATA2GP/GPIO36
SATA3GP/GPIO37
SATA4GP/GPIO16
SATA5GP/GPIO49
SATA3COMPI
SATA3RCOMPO
TP16
SATA3RBIAS
HOST
A20GATE
INIT3_3V#
RCIN#
SERIRQ
THRMTRIP#
PECI
PMSYNCH
3 OF 11
H61/BGA942/B3/[10HB1-030H61-20R]
FDI RX
TEMP_ALART-
R310 1K/4/1/X
RN16 8.2K/8P4R/4
RN17 8.2K/8P4R/4
RN18 8.2K/8P4R/4
SRCCLK_SATA R261 8.2K/4
-SRCCLK_SATA R262 8.2K/4
SATACOMP R286 37.4/4/1 VCC1_05_PCH
SATA3COMP R287 49.9/4/1 VCC1_05_PCH
SATA3BIAS R288 750/4/1
SB_PECI R283 0/4/X
RN12 8.2K/8P4R/4
RN11 8.2K/8P4R/4
MB-ID
R224 8.2K/4/X GPIO17
R333 8.2K/4/X GPIO19
PCH A
PCHA
PCI
1 OF 11
H61/BGA942/B3/[10HB1-030H61-20R]
RN7 8.2K/8P4R/4
RN6 8.2K/8P4R/4
RN8 8.2K/8P4R/4
RN9 8.2K/8P4R/4
RN10 8.2K/8P4R/4
SATA CONN.
SATA2_0
SATA2_1
SATA2_2
SATA2_3
SATA2/7/BU/H/OP/VA/D/1/B/[11NH5-110307-E2R_11NH5-110307-E1R]
H61 SATA3.0 N/A
H1X7-SATA2-HS-MASK
Gigabyte Technology
Title
PCH HOST , SATA, PCI
Size B
Document Number
GA-H61M-S2PV
Rev 2.2
Date: Thursday, July 25, 2013
Sheet 11 of 33
Gigabyte Confidential
Do not Copy

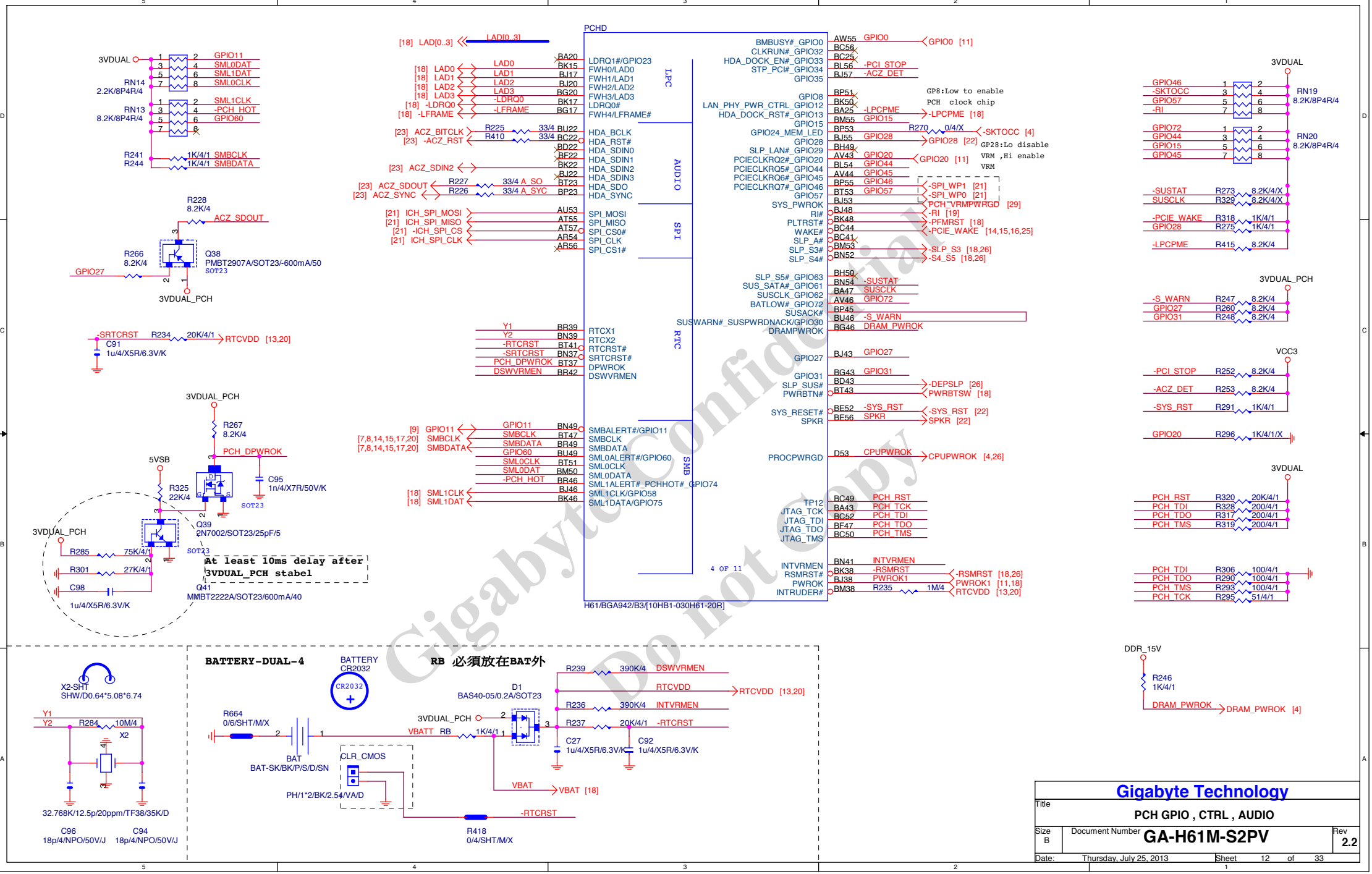

Title	PCH GPIO , CTRL , AUDIO
Size	B
Document Number	GA-H61M-S2PV
Rev	2.2
Date:	Thursday, July 25, 2013
Sheet	12 of 33

Gigabyte Technology

PCH I POWER

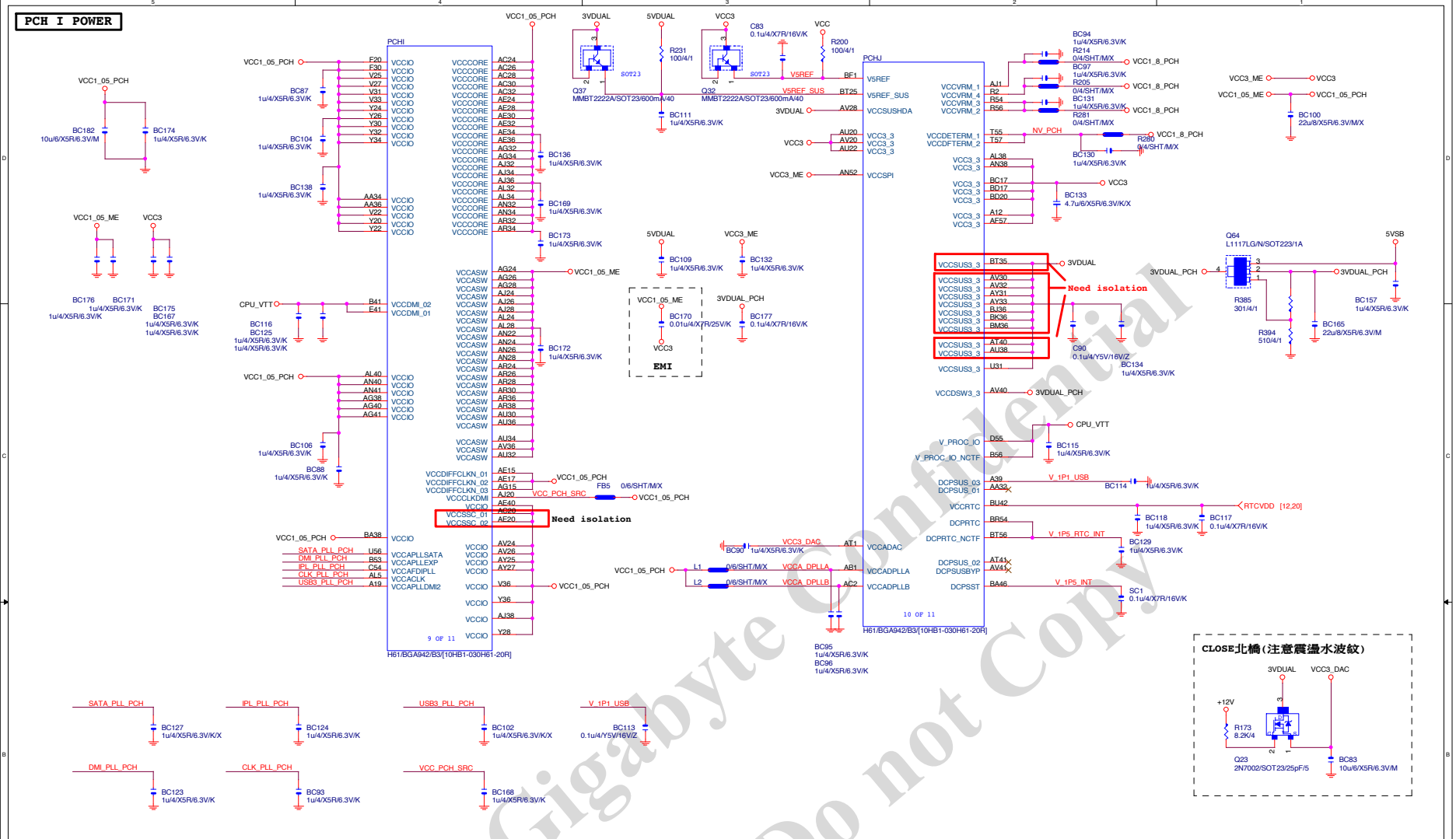

PCH K GND

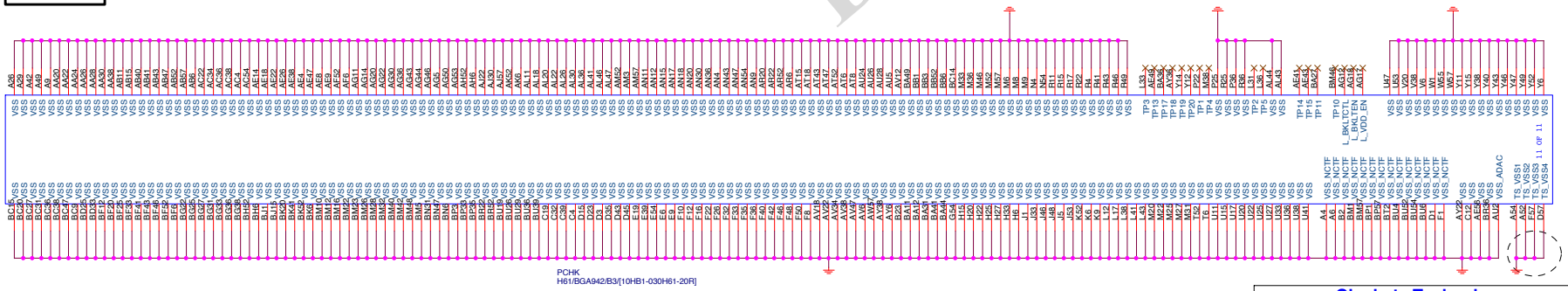

Gigabyte Confidential
Do not Copy

Gigabyte Technology			
Title	PCH PWR ,GND		
Size Custom	Document Number GA-H61M-S2PV		Rev 2.2
Date: Thursday, July 25, 2013	Sheet 13 of 33		

PCIEX16

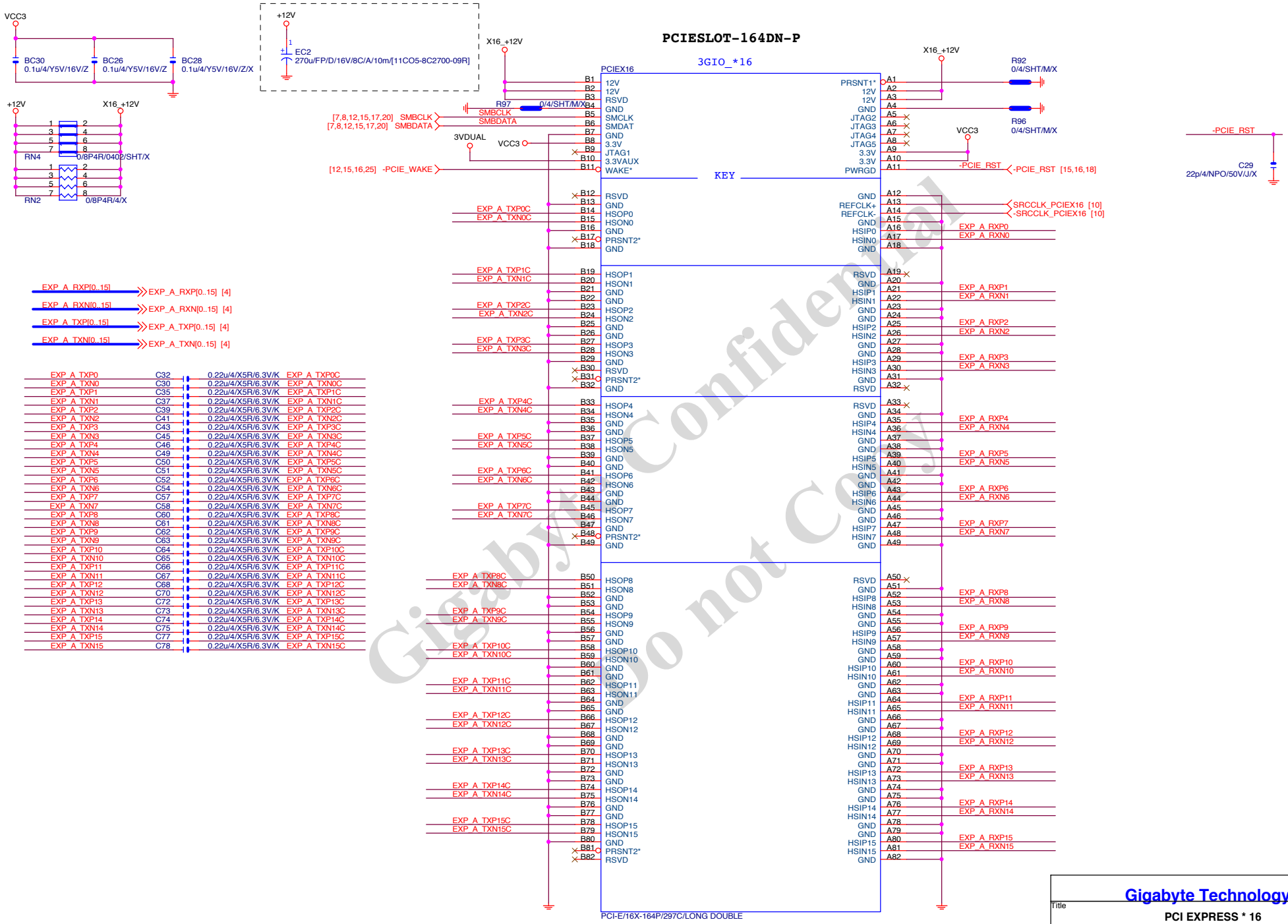

Gigabyte Confidential
Do not Copy

Gigabyte Technology		
Title	PCI EXPRESS * 16	
Size Custom	Document Number GA-H61M-S2PV	Rev 2.2
Date: Thursday, July 25, 2013	Sheet 14 of 33	

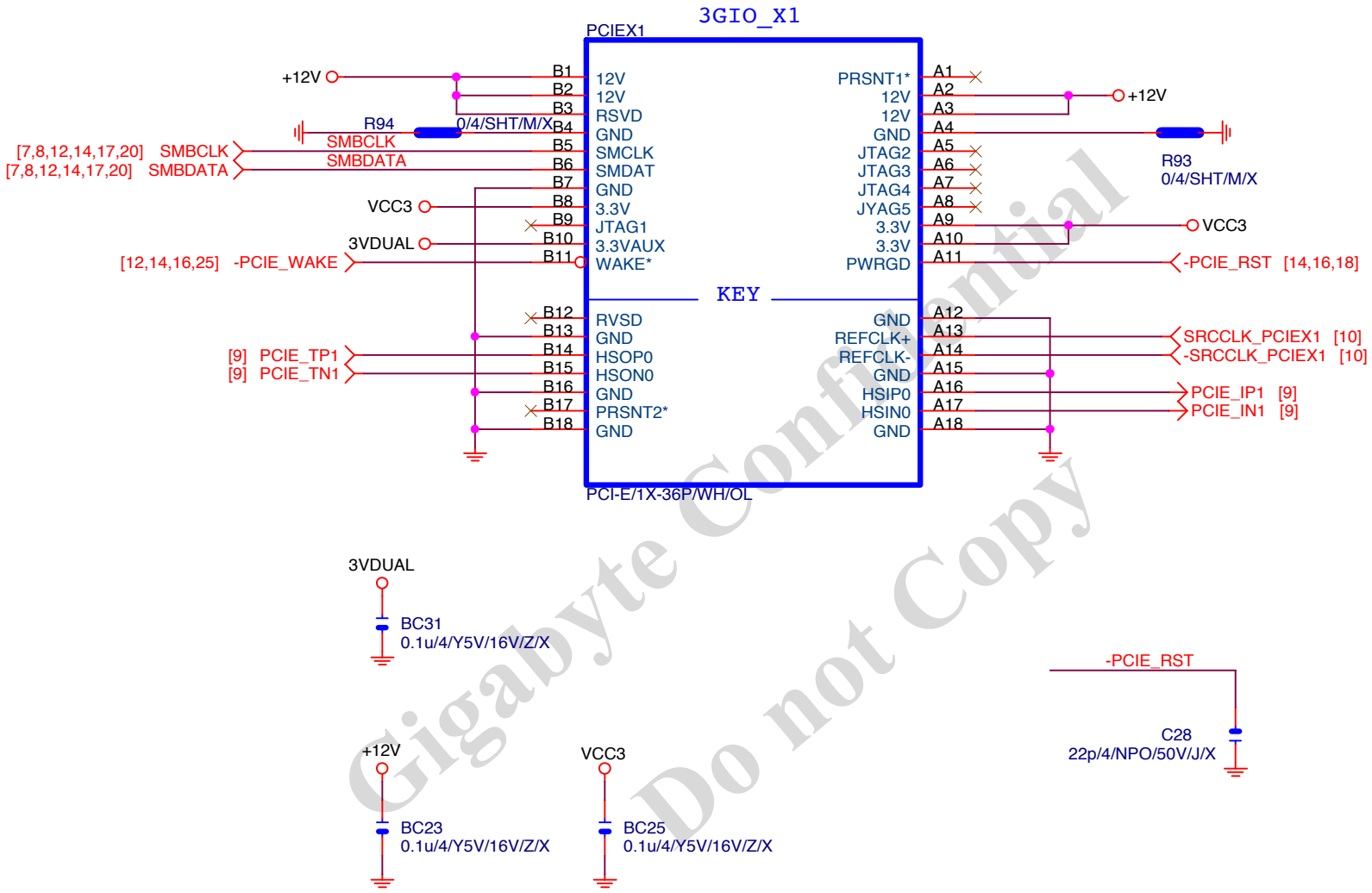

Gigabyte Confidential
Do not Copy

Gigabyte Technology			
Title	PCI EXPRESS X 1 PORT		
Size A	Document Number	GA-H61M-S2PV	Rev 2.2
Date: Thursday, July 25, 2013	Sheet 15 of 33		

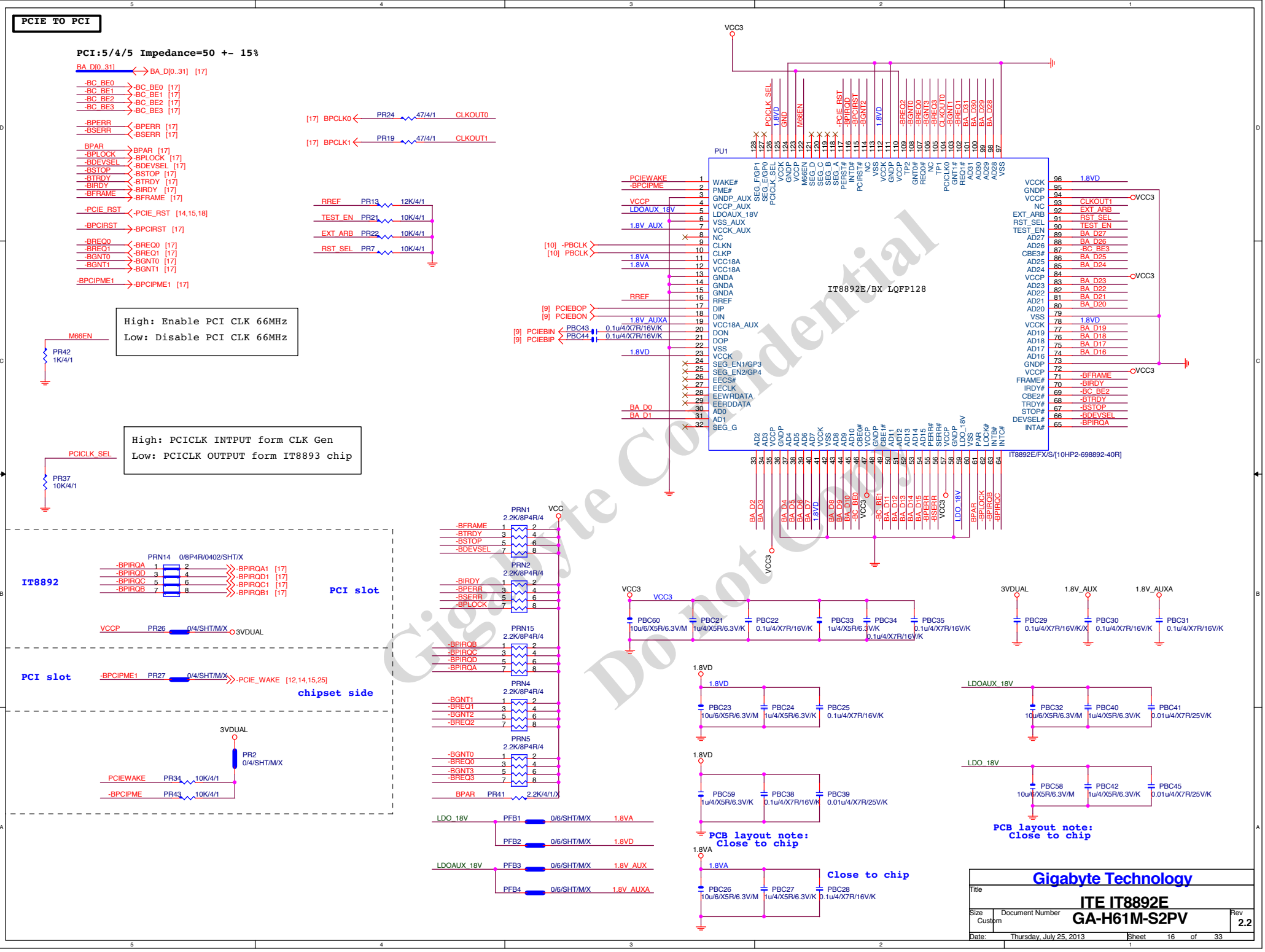
PCIE TO PCI
PCI:5/4/5 Impedance=50 +- 15%
BA_D[0..31]
-BC_BE0
-BC_BE1
-BC_BE2
-BC_BE3
-BPERR
-BSERR
BPAR
-BPLOCK
-BDEVSEL
-BSTOP
-BTRDY
-BIRDY
-BFRAME
-PCIE_RST
-BPCIRST
-BREQ0
-BREQ1
-BGNT0
-BGNT1
-BPCIPME1
[17] BPCLK0
PR24 47/4/1 CLKOUT0
[17] BPCLK1
PR19 47/4/1 CLKOUT1
RREF PR13 12K/4/1
TEST_EN PR21 10K/4/1
EXT_ARB PR22 10K/4/1
RST_SEL PR7 10K/4/1
High: Enable PCI CLK 66MHz
Low: Disable PCI CLK 66MHz
M66EN
PR42 1K/4/1
High: PCICLK INTPUT form CLK Gen
Low: PCICLK OUTPUT form IT8893 chip
PCICLK_SEL
PR37 10K/4/1
VCC3
PU1
IT8892E/BX LQFP128
IT8892E/FX/S/[10HP2-698892-40R]
PCIEWAKE
-BPCIPME
VCCP
LDOAUX_18V
1.8V_AUX
[10] -PBCLK
[10] PBCLK
1.8VA
RREF
[9] PCIEBOP
[9] PCIEBON
1.8V_AUXA
[9] PCIEBIN
[9] PCIEBIP
PBC43 0.1u/4/X7R/16V/K
PBC44 0.1u/4/X7R/16V/K
1.8VD
BA_D0
BA_D1
CLKOUT1
EXT_ARB
RST_SEL
TEST_EN
BA_D27
BA_D26
-BC_BE3
BA_D25
BA_D24
BA_D23
BA_D22
BA_D21
BA_D20
BA_D19
BA_D18
BA_D17
BA_D16
-BFRAME
-BIRDY
-BC_BE2
-BTRDY
-BSTOP
-BDEVSEL
-BPIRQA
IT8892
PRN14 0/8P4R/0402/SHT/X
-BPIRQA
-BPIRQD
-BPIRQC
-BPIRQB
-BPIRQA1 [17]
-BPIRQD1 [17]
-BPIRQC1 [17]
-BPIRQB1 [17]
PCI slot
VCCP PR26 0/4/SHT/M/X 3VDUAL
PCI slot
-BPCIPME1 PR27 0/4/SHT/M/X
-PCIE_WAKE [12,14,15,25]
chipset side
3VDUAL
PR2 0/4/SHT/M/X
PCIEWAKE PR34 10K/4/1
-BPCIPME PR43 10K/4/1
PRN1 2.2K/8P4R/4
-BFRAME
-BTRDY
-BSTOP
-BDEVSEL
PRN2 2.2K/8P4R/4
-BIRDY
-BPERR
-BSERR
-BPLOCK
PRN15 2.2K/8P4R/4
-BPIRQB
-BPIRQC
-BPIRQD
-BPIRQA
PRN4 2.2K/8P4R/4
-BGNT1
-BREQ1
-BGNT2
-BREQ2
PRN5 2.2K/8P4R/4
-BGNT0
-BREQ0
-BGNT3
-BREQ3
BPAR PR41 2.2K/4/1/X
LDO_18V PFB1 0/6/SHT/M/X 1.8VA
PFB2 0/6/SHT/M/X 1.8VD
LDOAUX_18V PFB3 0/6/SHT/M/X 1.8V_AUX
PFB4 0/6/SHT/M/X 1.8V_AUXA
PBC60 10u/6/X5R/6.3V/M
PBC21 1u/4/X5R/6.3V/K
PBC22 0.1u/4/X7R/16V/K
PBC33 1u/4/X5R/6.3V/K
PBC34 0.1u/4/X7R/16V/K
PBC35 0.1u/4/X7R/16V/K
3VDUAL
1.8V_AUX
1.8V_AUXA
PBC29 0.1u/4/X7R/16V/K/X
PBC30 0.1u/4/X7R/16V/K
PBC31 0.1u/4/X7R/16V/K
1.8VD
PBC23 10u/6/X5R/6.3V/M
PBC24 1u/4/X5R/6.3V/K
PBC25 0.1u/4/X7R/16V/K
LDOAUX_18V
PBC32 10u/6/X5R/6.3V/M
PBC40 1u/4/X5R/6.3V/K
PBC41 0.01u/4/X7R/25V/K
PBC59 1u/4/X5R/6.3V/K
PBC38 0.1u/4/X7R/16V/K
PBC39 0.01u/4/X7R/25V/K
PCB layout note:
Close to chip
LDO_18V
PBC58 10u/6/X5R/6.3V/M
PBC42 1u/4/X5R/6.3V/K
PBC45 0.01u/4/X7R/25V/K
PCB layout note:
Close to chip
1.8VA
PBC26 10u/6/X5R/6.3V/M
PBC27 1u/4/X5R/6.3V/K
PBC28 0.1u/4/X7R/16V/K
Close to chip
Gigabyte Technology
Title
ITE IT8892E
Size Custom
Document Number
GA-H61M-S2PV
Rev 2.2
Date: Thursday, July 25, 2013
Sheet 16 of 33
Gigabyte Confidential
Do not Copy

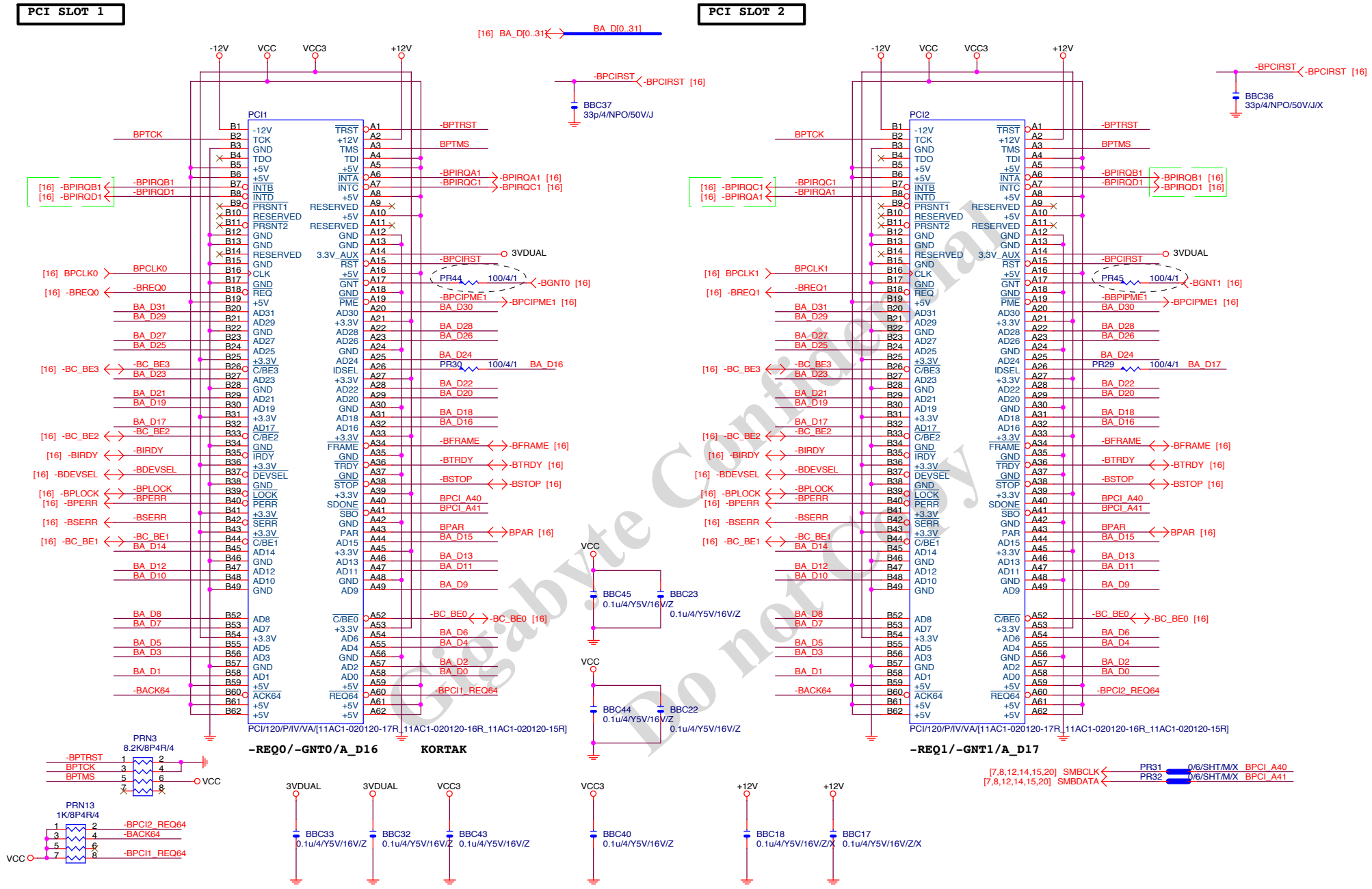

Gigabyte Confidential
Do not Copy

Gigabyte Technology		
Title	PCI SLOT 1&2	
Size Custom	Document Number GA-H61M-S2PV	Rev 2.2
Date: Thursday, July 25, 2013	Sheet 17 of 33	

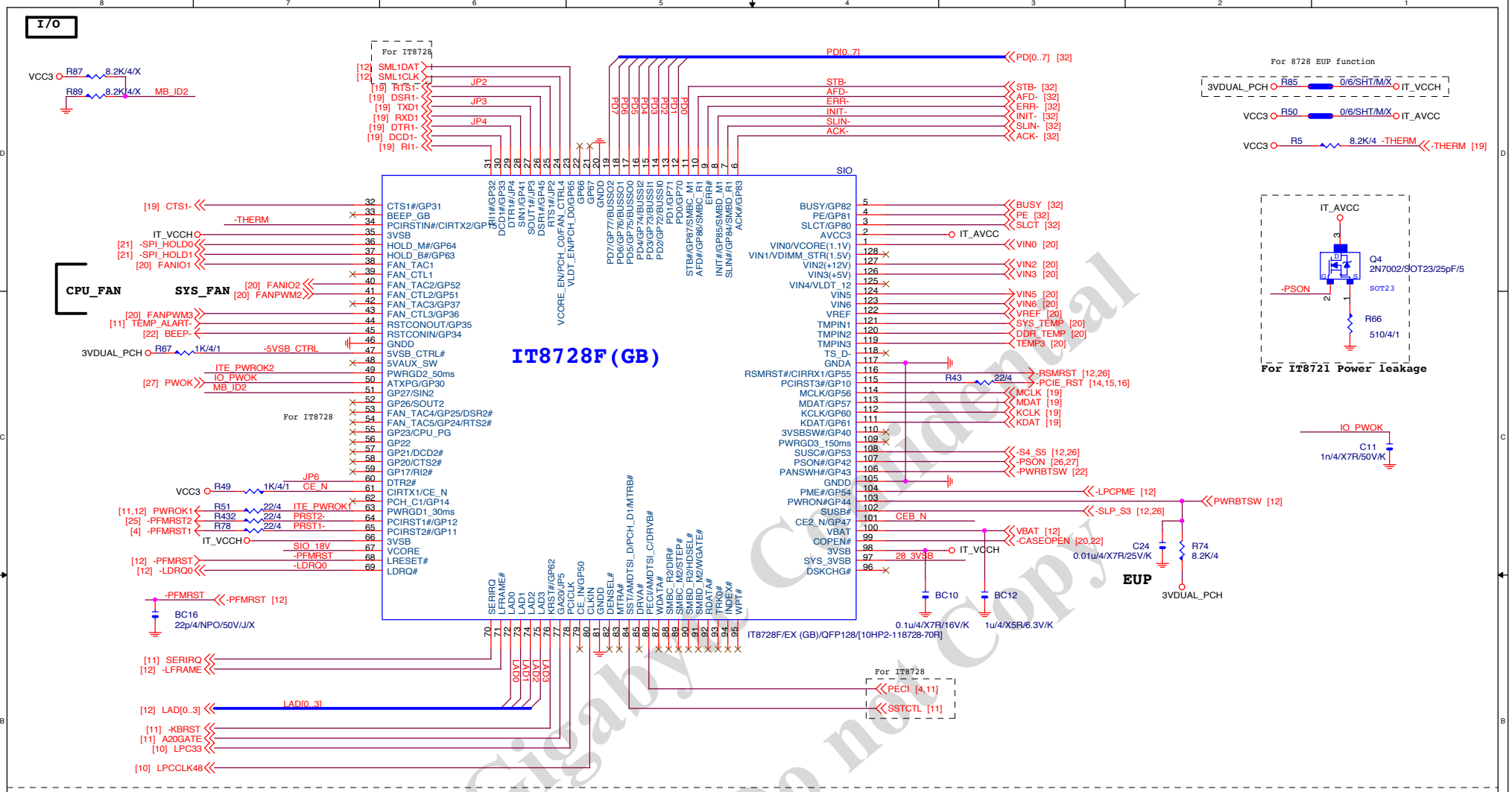

	IT8728
PIN121	VCORE_EN/PCH_C0
PIN120	VLDT_EN/PCH_D0
PIN19	ATXPG
PIN31	PCH_C1
PIN53	SST/AMDTSI_D/MTRB#/PCH_D1
PIN55	PECI/AMDTSI_C/DRVB#
PIN66	SYS_3VSB
PIN70	GP47
PIN95	VIN2(VCC5)
PIN96	VIN1(VCC12)
PIN97	VIN1/VDIMM_STR(1.5V)
PIN98	VIN0/VCORE(1.1V)/NC

Gigabyte Confidential
Do not Copy

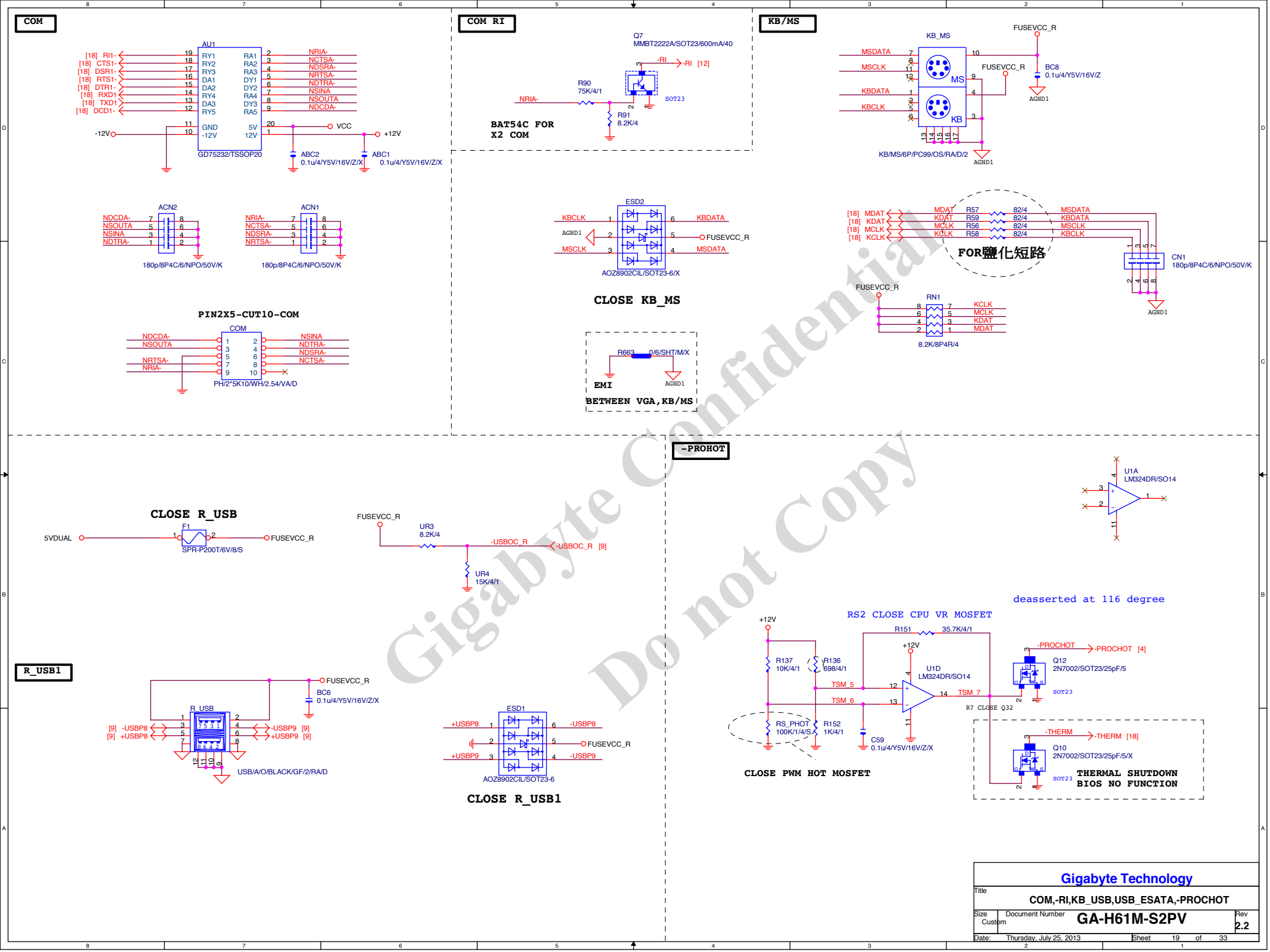

Gigabyte Confidential
Do not Copy

TEMP H/W MONITOR

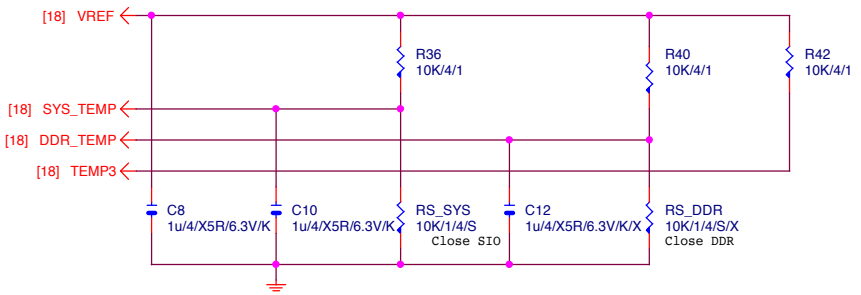

CPU SMART FAN

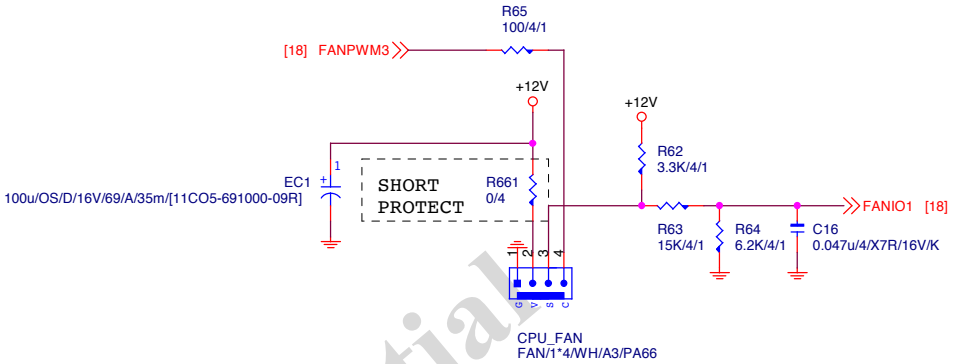

CASE OPEN

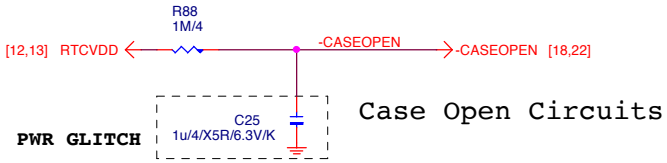

SYS SMART FAN

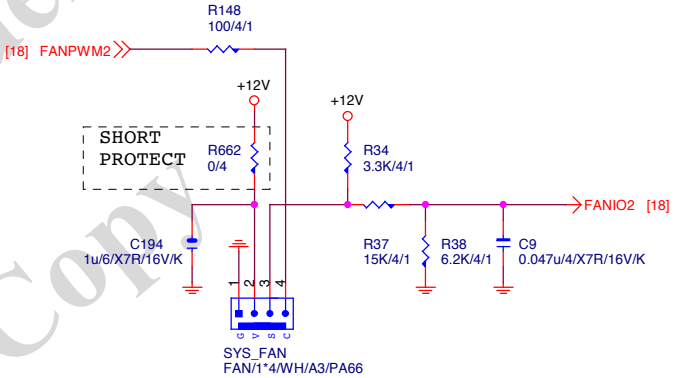

VOLTAGE-- H/W MONITOR

IT8728/EX VIN2/VIN3-->2V

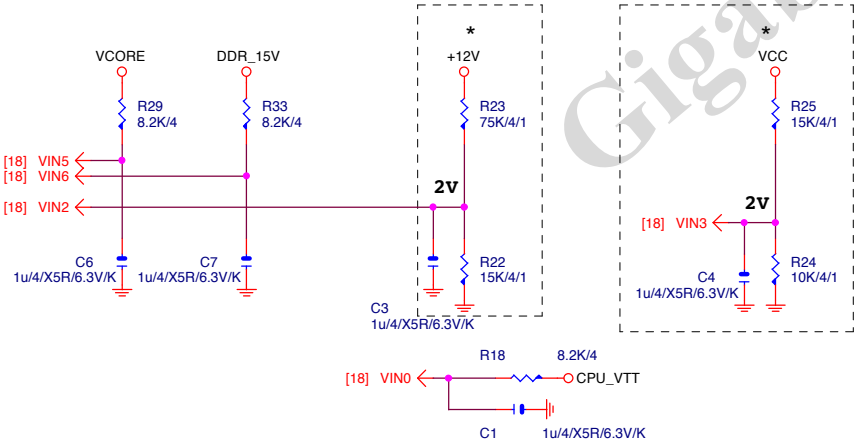

O.V.

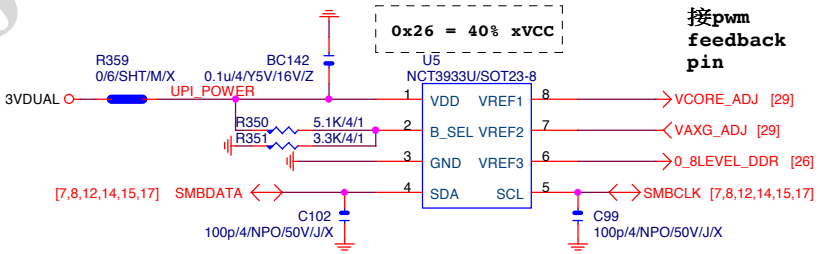

Gigabyte Confidential
Do not Copy

Gigabyte Technology			
Title	HWM,FAN CTRL,OV		
Size Custom	Document Number GA-H61M-S2PV		Rev 2.2
Date: Thursday, July 25, 2013	Sheet 20 of 33		

DUAL BIOS

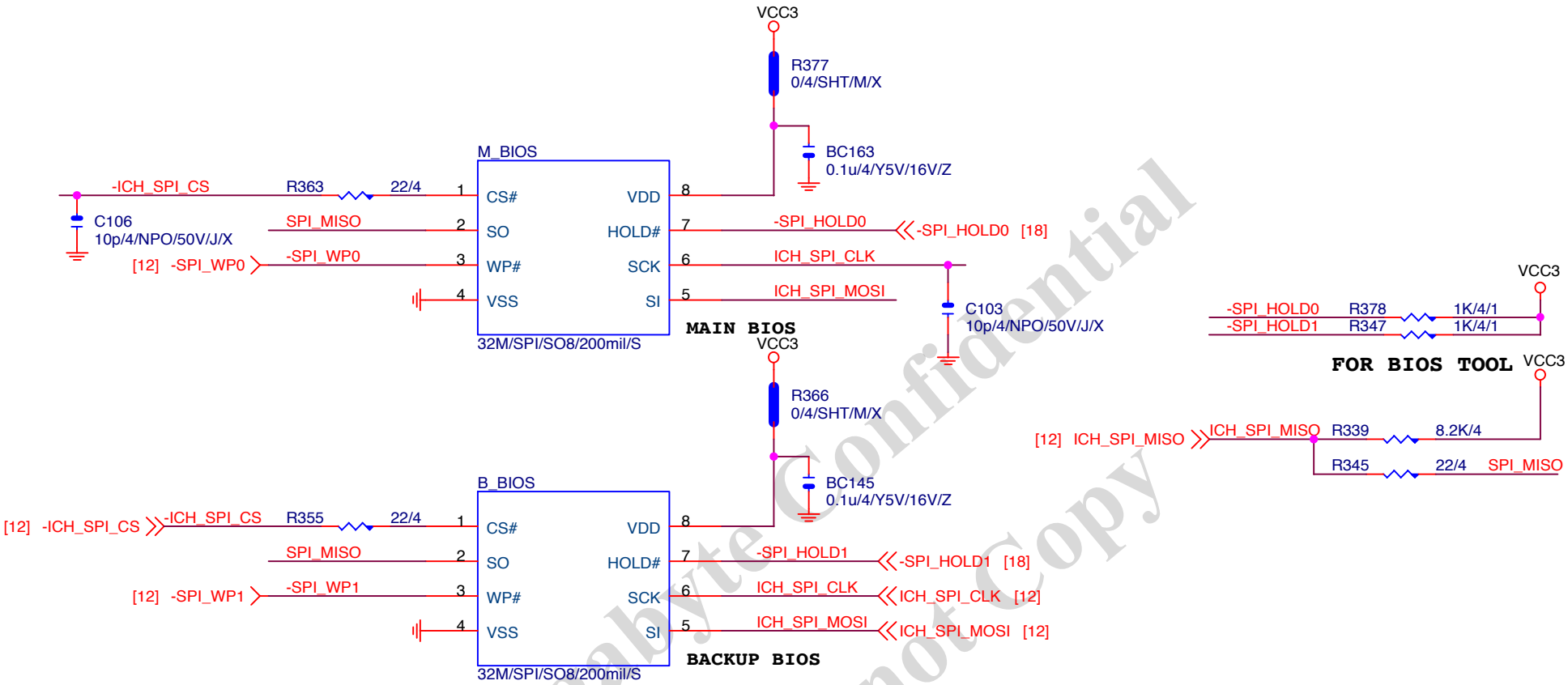

B65使用64M BIOS

使用H67暂用32M

H61使用32M BIOS

BOOT DEVICE	GNT1	GNT0
LPC	0	0
PCI	0	1
SPI	1	1

1 means floating
0 means PD 1K

Gigabyte Confidential
Do not Copy

FRONT USB1

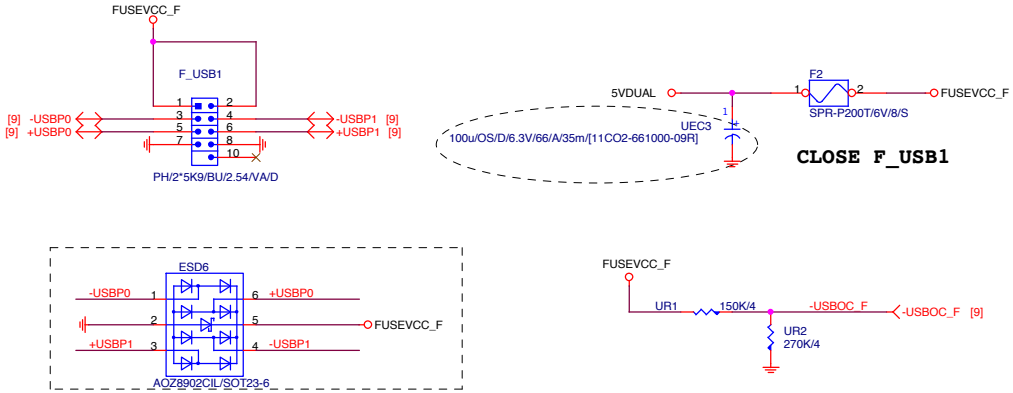

SATA LED

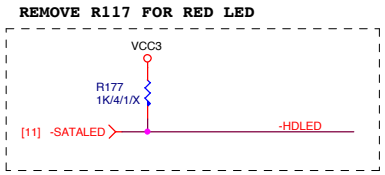

SPKR

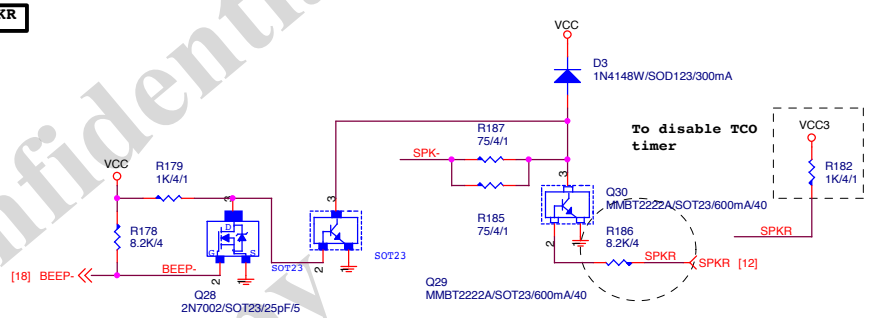

FRONT USB2

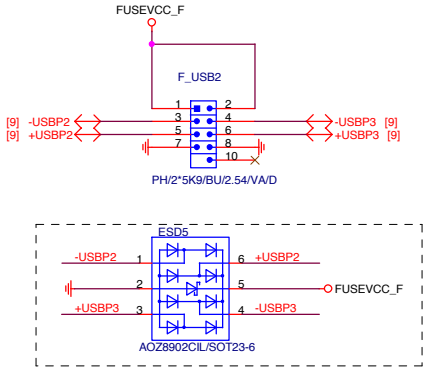

INTEL FRONT PANEL

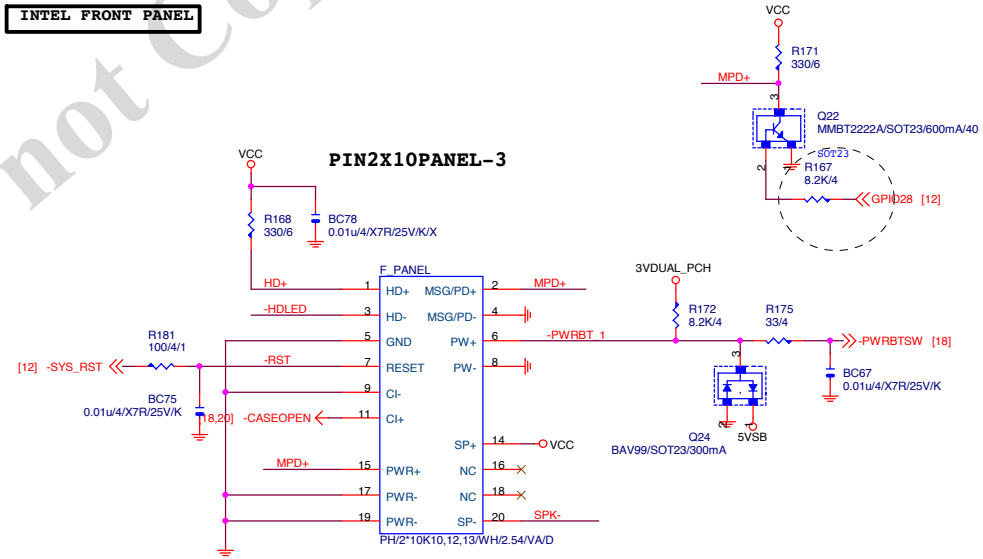

Gigabyte Confidential
Do not Copy

Gigabyte Technology		
Title	FP,F_USB,USB PWR,SPKR,SATA LED	
Size Custom	Document Number GA-H61M-S2PV	Rev 2.2
Date: Thursday, July 25, 2013	Sheet 22 of 33	

AZALIA CODEC

ALC892/ALC889A/ALC889/ALC888B Colay

	ALC888B	ALC888 -VA	ALC889A	ALC888 -VD	ALC892
CR59	X	O	O	O	O
CR53,58	X	X	O	X	X
CR56	O	O	O	O	X
CR63	X	X	X	X	O
CR34	20K/1%	20K/1%	20K/0.1%	20K/1%	20K/1%

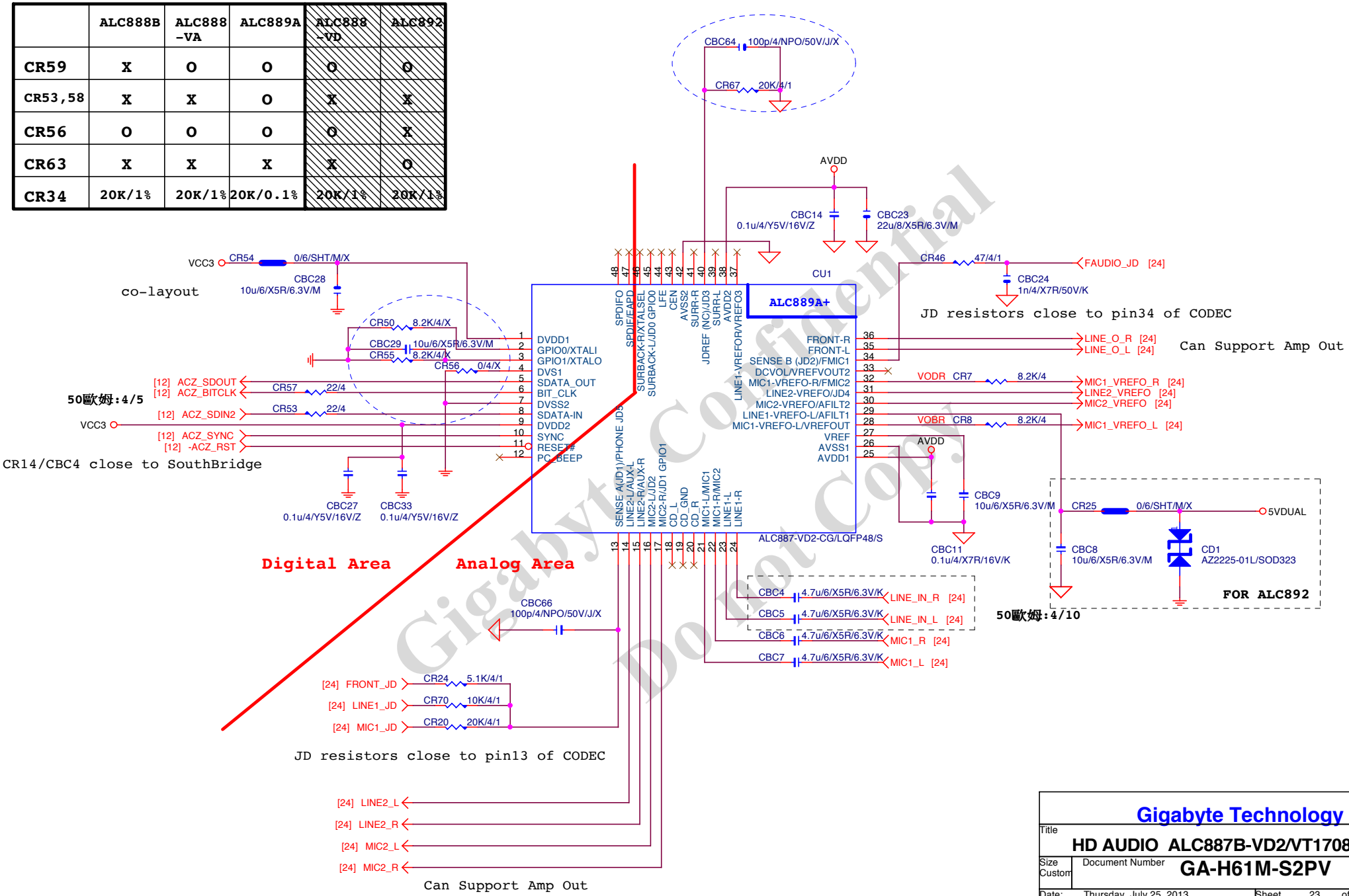

Gigabyte Confidential
Do not Copy

Gigabyte Technology

Title: HD AUDIO ALC887B-VD2/VT1708S/VT2021

Size: Custom | Document Number: GA-H61M-S2PV | Rev: 2.2

Date: Thursday, July 25, 2013 | Sheet 23 of 33

CODEC POWER/EMI PAD

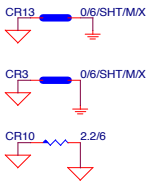

SPDIF

N/A

AZALIA JACK

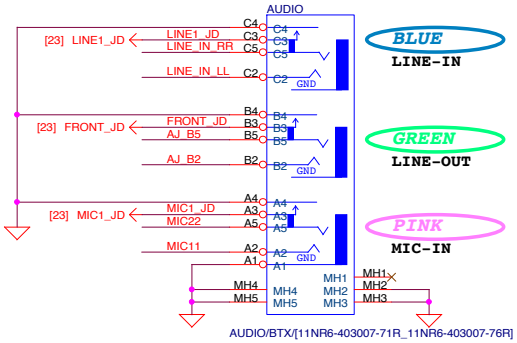

LINE-OUT

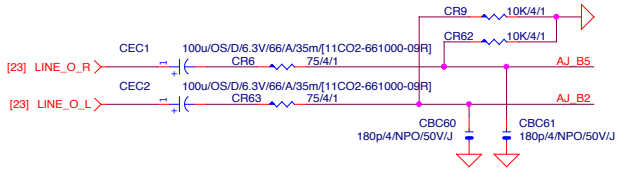

LINE-IN

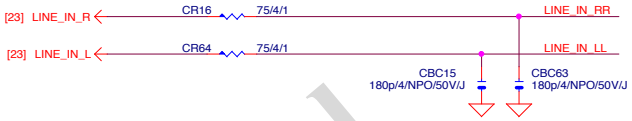

MIC-IN

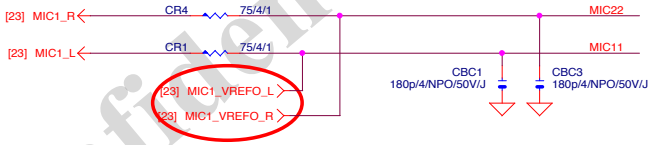

F_AUDIO ESD

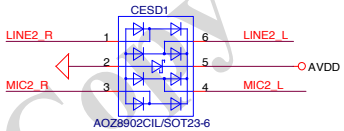

SSOP6-1

AZALIA FRONT PANEL

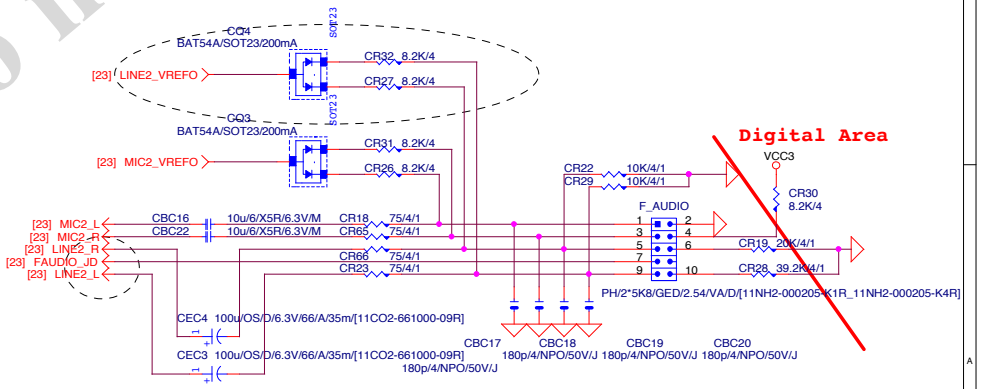

Gigabyte Confidential
Do not Copy

Gigabyte Technology			
Title	AUDIO JACK		
Size Custom	Document Number GA-H61M-S2PV		Rev 2.2
Date: Thursday, July 25, 2013	Sheet 24 of 33		

LAN:RTL8111E/VB/VL

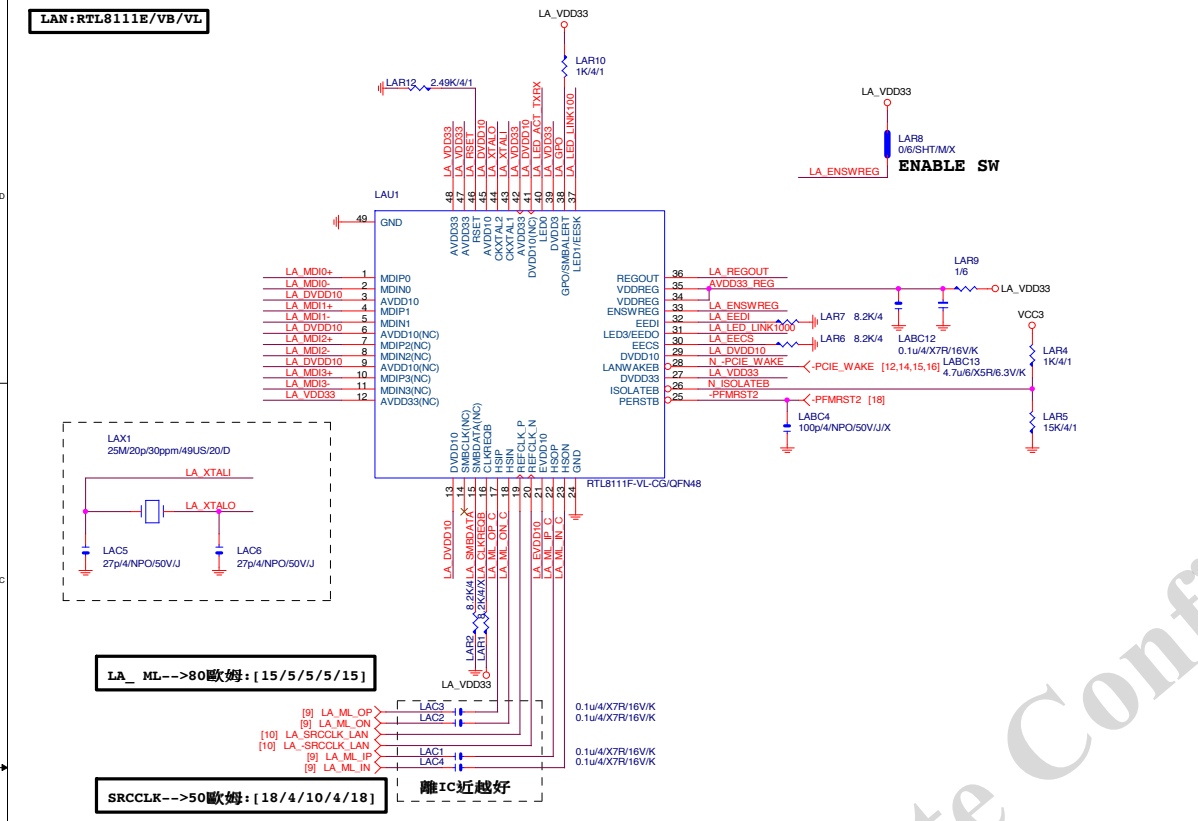

LAN POWER

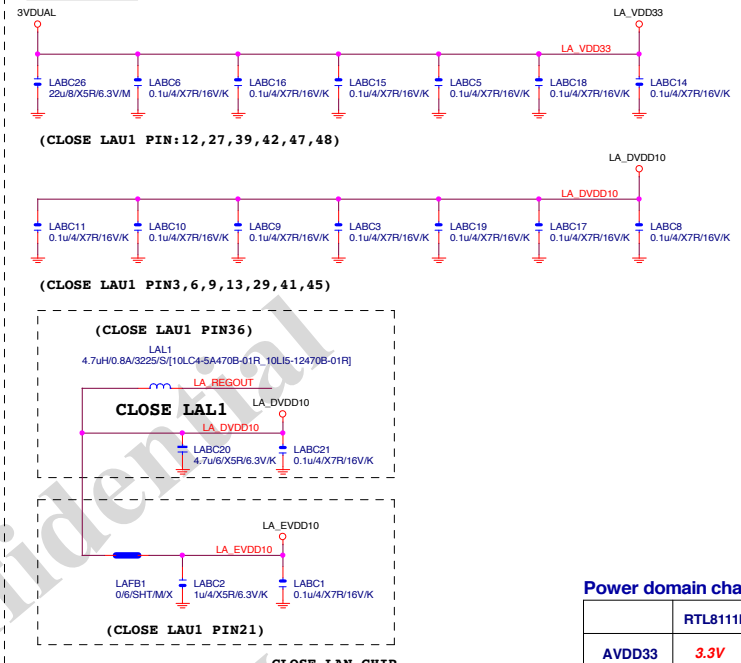

Power domain chart

	RTL8111E
AVDD33	3.3V
DVDD33	3.3V
VDDREG	3.3V
DVDD10	1.05V

USB_LAN CONNECTOR

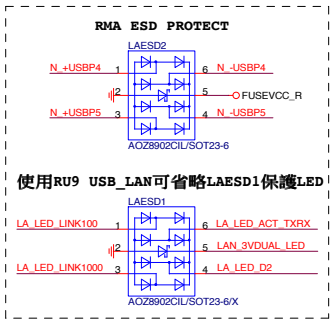

LA_MDI-->100歐姆:[20/4/8/4/20]

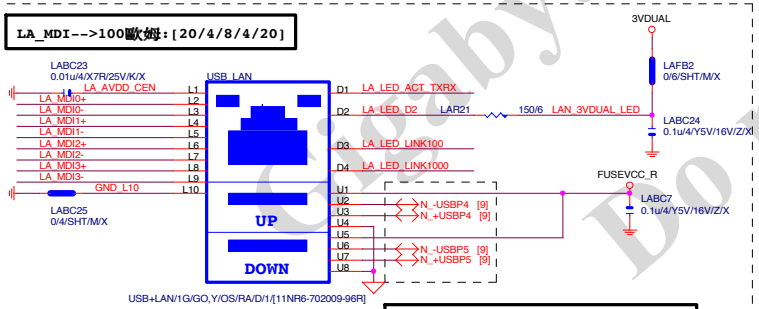

9KV ESD PROTECTION

注意:USB PORT(目前:暫代6,7PORT)
USB-->90歐姆:[15/4.5/7.5/4.5/15]

USB X3 POWER

Close to connector

EMI SHORT PAD

PS:視EMI需求

注意:LAN LED PROTECT:(CO-LAYOUT)
1.ESD(6PIN):AOZ8902CIL/SOT23-6(DEFAULT)
2.SURGE(5PIN):AZ2025-04S/SOT23-5L

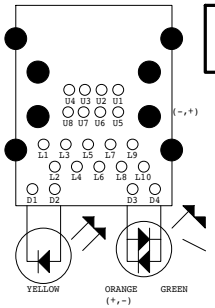

Dual Color LED

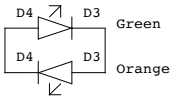

Single Color LED

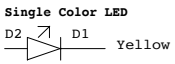

料號	規格	廠商
11NR6-702009-0ER	1G LAN (12core)	UDE
11NR6-702009-91R	1G LAN(8 core)	FOXCONN
11NR6-702009-92R	1G LAN(8 core)	UDE
11NR6-702009-11R	1G LAN(12core/RED)	UDE
11NR6-702009-12R	1G LAN(8 core/RED)	FOXCONN

USB_LAN BOM區分:

1.(紅色/12CORE/三倍):USB+LAN/1G/GO,Y/OS/RA/D/1/RED
2.(黑色/12CORE):USB+LAN/1G/GO,Y/OS/RA/D/1
3.(黑色/8CORE):USB+LAN/1G/GO,Y/OS/RA/D/8C

Gigabyte Confidential
Do not Copy

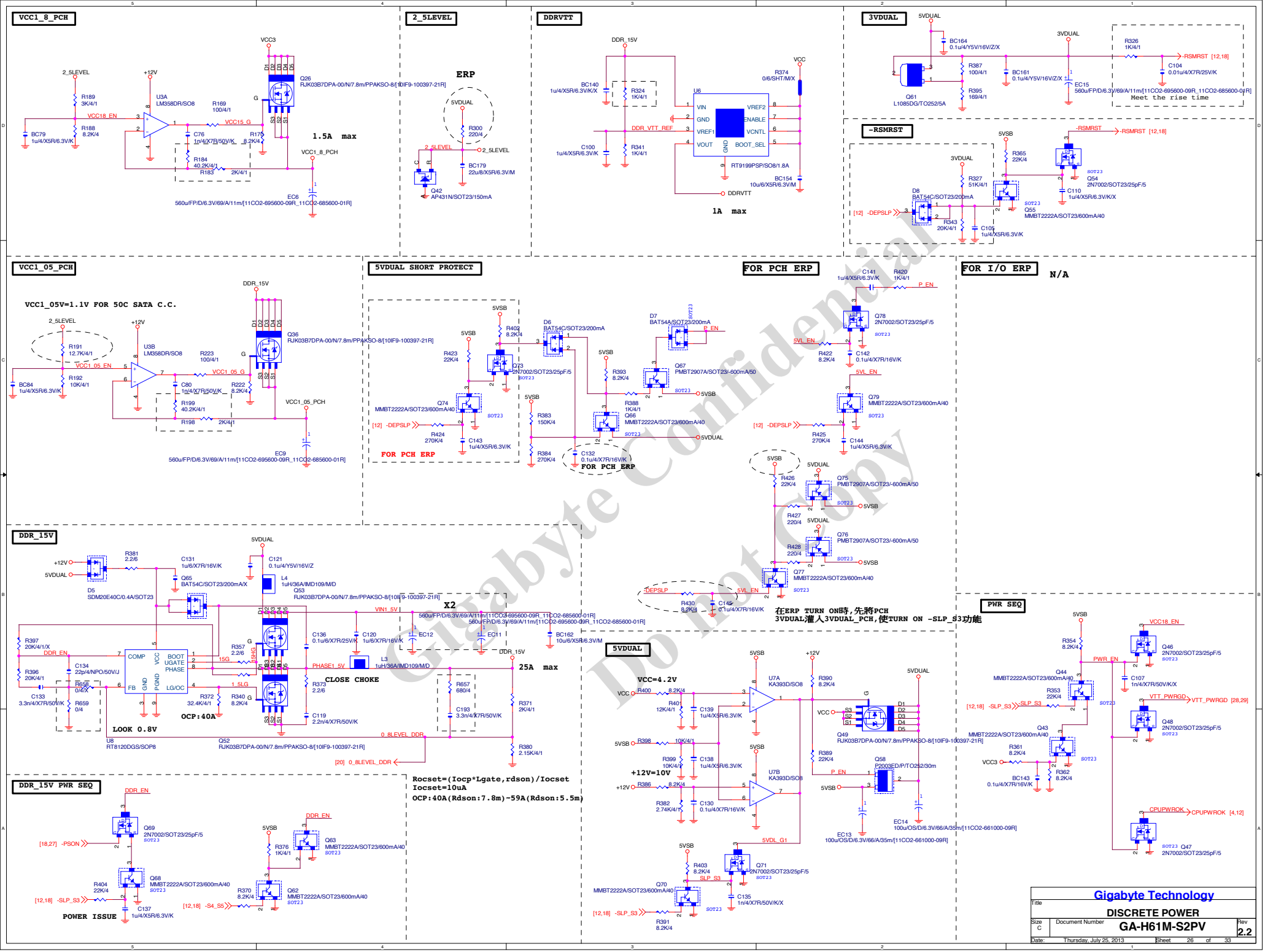

Gigabyte Confidential
Do not Copy

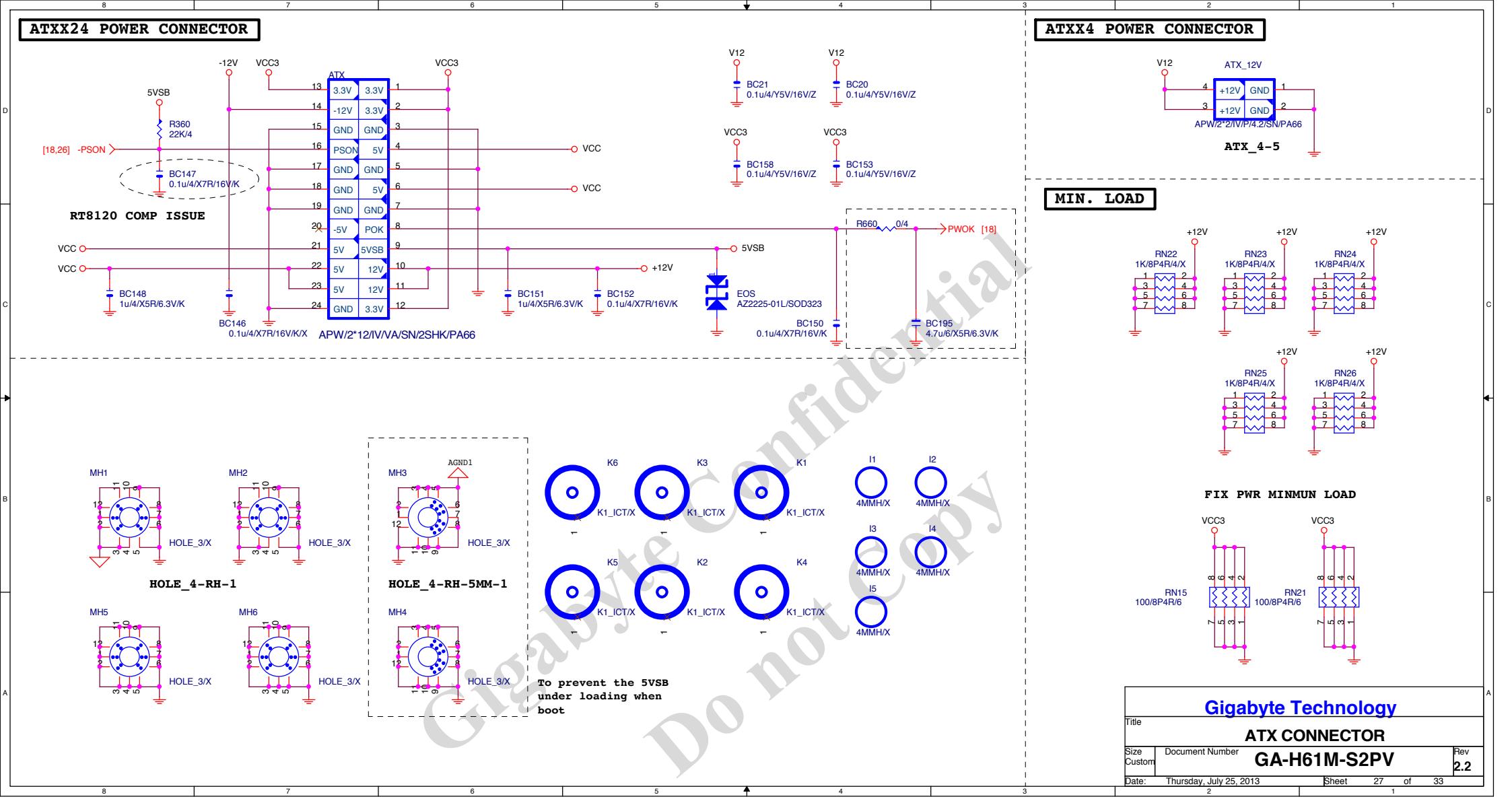
ATXX24 POWER CONNECTOR
ATXX4 POWER CONNECTOR
MIN. LOAD
ATX
APW/2*12/IV/VA/SN/2SHK/PA66
ATX_12V
APW/2*2/IV/P/4.2/SN/PA66
ATX_4-5
RT8120 COMP ISSUE
[18,26] -PSON
R360 22K/4
BC147 0.1u/4/X7R/16V/K
BC148 1u/4/X5R/6.3V/K
BC146 0.1u/4/X7R/16V/K/X
BC151 1u/4/X5R/6.3V/K
BC152 0.1u/4/X7R/16V/K
EOS AZ2225-01L/SOD323
BC150 0.1u/4/X7R/16V/K
R660 0/4
PWOK [18]
BC195 4.7u/6/X5R/6.3V/K
BC21 0.1u/4/Y5V/16V/Z
BC20 0.1u/4/Y5V/16V/Z
BC158 0.1u/4/Y5V/16V/Z
BC153 0.1u/4/Y5V/16V/Z
RN22 1K/8P4R/4/X
RN23 1K/8P4R/4/X
RN24 1K/8P4R/4/X
RN25 1K/8P4R/4/X
RN26 1K/8P4R/4/X
FIX PWR MINMUN LOAD
RN15 100/8P4R/6
RN21 100/8P4R/6
HOLE_4-RH-1
HOLE_4-RH-5MM-1
HOLE_3/X
K1_ICT/X
4MMH/X
To prevent the 5VSB under loading when boot
Gigabyte Technology
ATX CONNECTOR
GA-H61M-S2PV
Rev 2.2
Date: Thursday, July 25, 2013
Sheet 27 of 33
Gigabyte Confidential Do not Copy

CPU_VTT

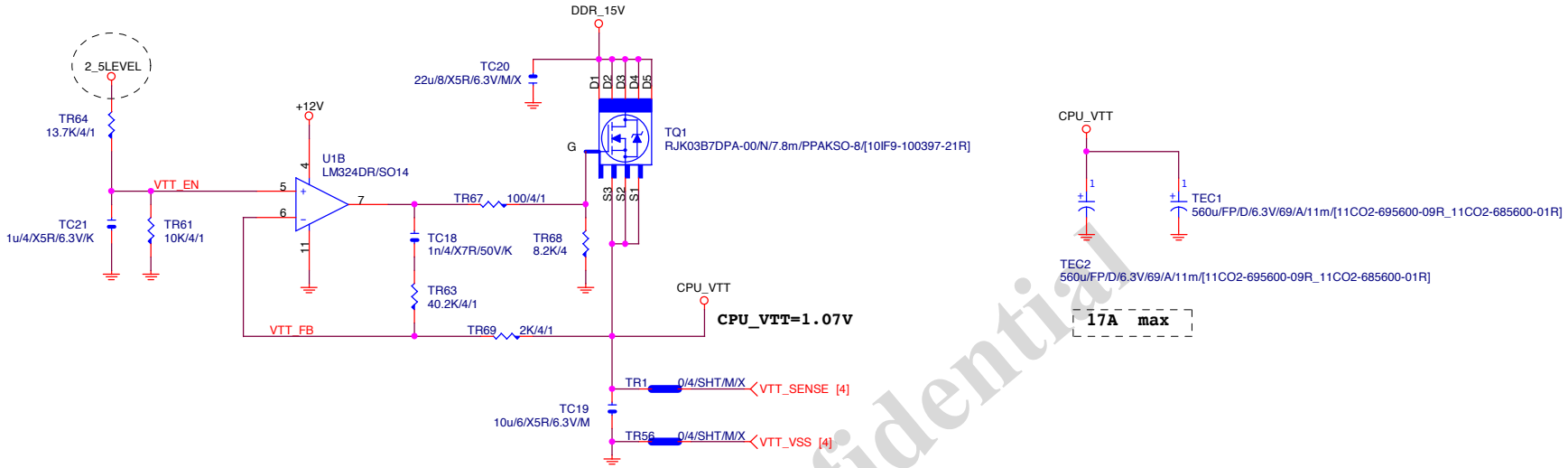

VCCSA

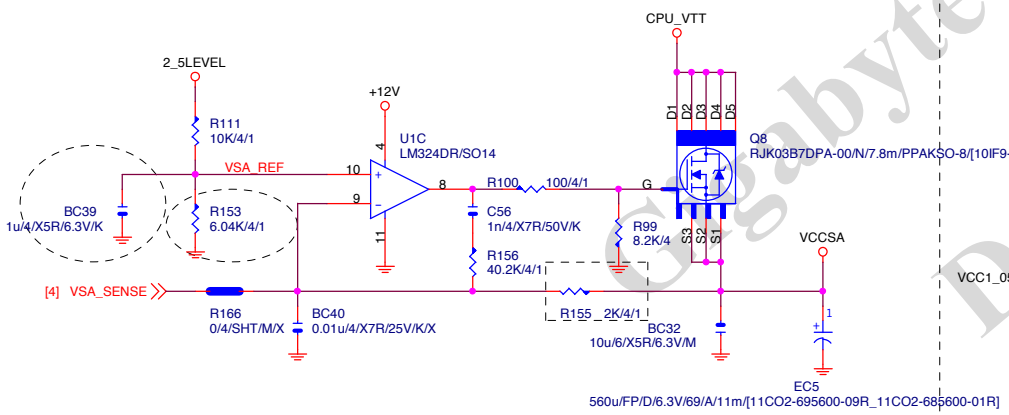

CPU_VTT PWR SEQ

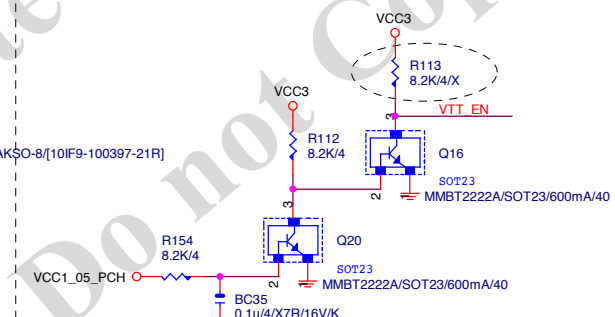

VTT_PWRGD

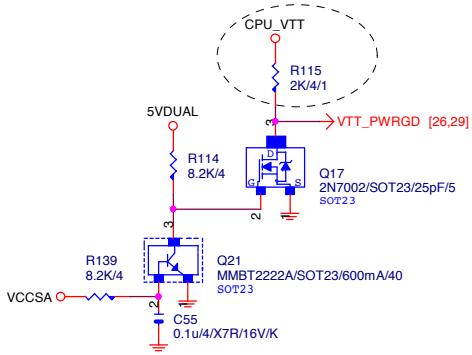

Gigabyte Confidential
Do not Copy

GIGABYTE™

Title	CPU_VTT PWM_RT8120	
Size B	Document Number GA-H61M-S2PV	Rev 2.2
Date: Thursday, July 25, 2013	Sheet 28 of 33	

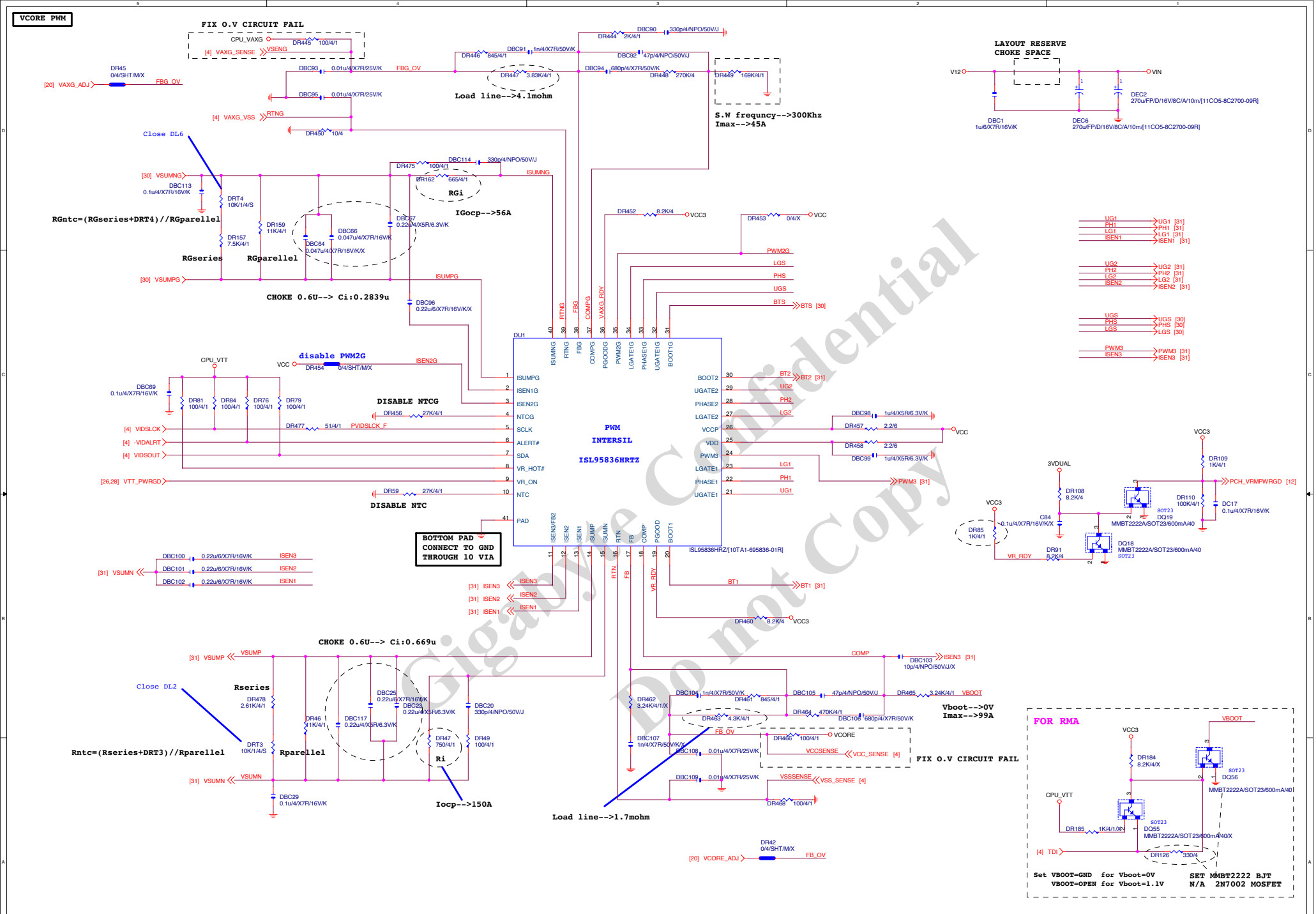

Gigabyte Technology		
Title	CPU CORE VR-1	
Size C	Document Number GA-H61M-S2PV	Rev 2.2
Date: Thursday, July 25, 2013	Sheet 29 of 33	

VAXG

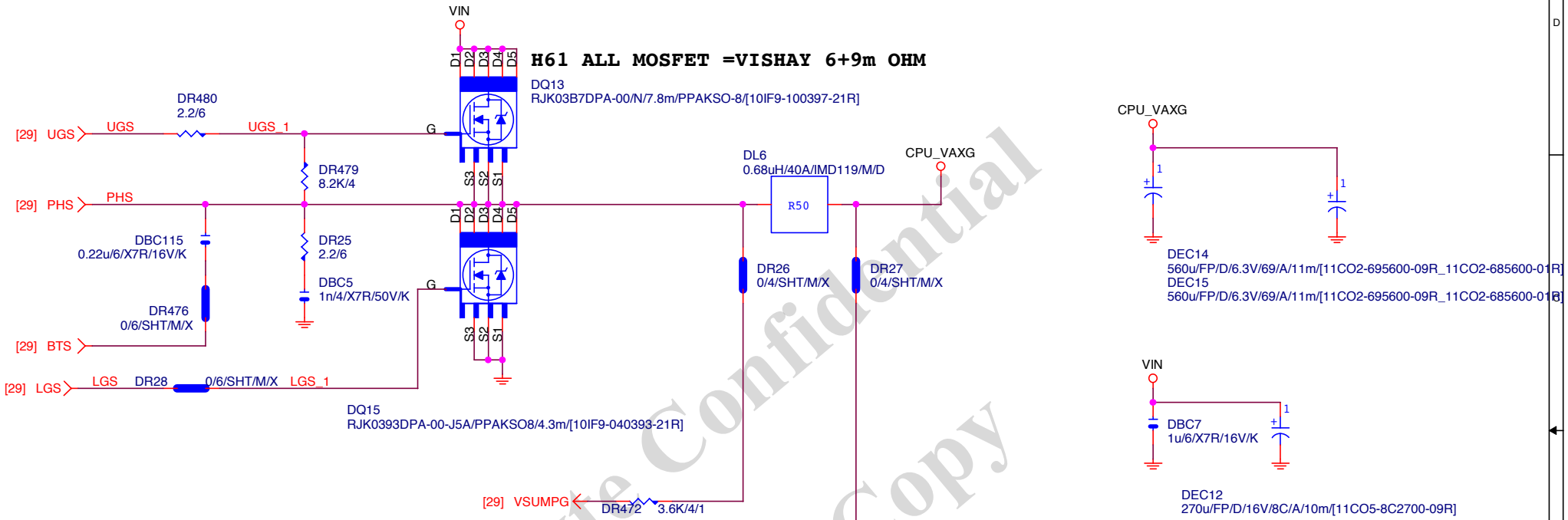

MOS HEATSINK

N/A

Gigabyte Confidential
Do not Copy

Gigabyte Technology			
Title	CPU CORE VR-2		
Size Custom	Document Number GA-H61M-S2PV		Rev 2.2
Date: Thursday, July 25, 2013	Sheet 30 of 33		

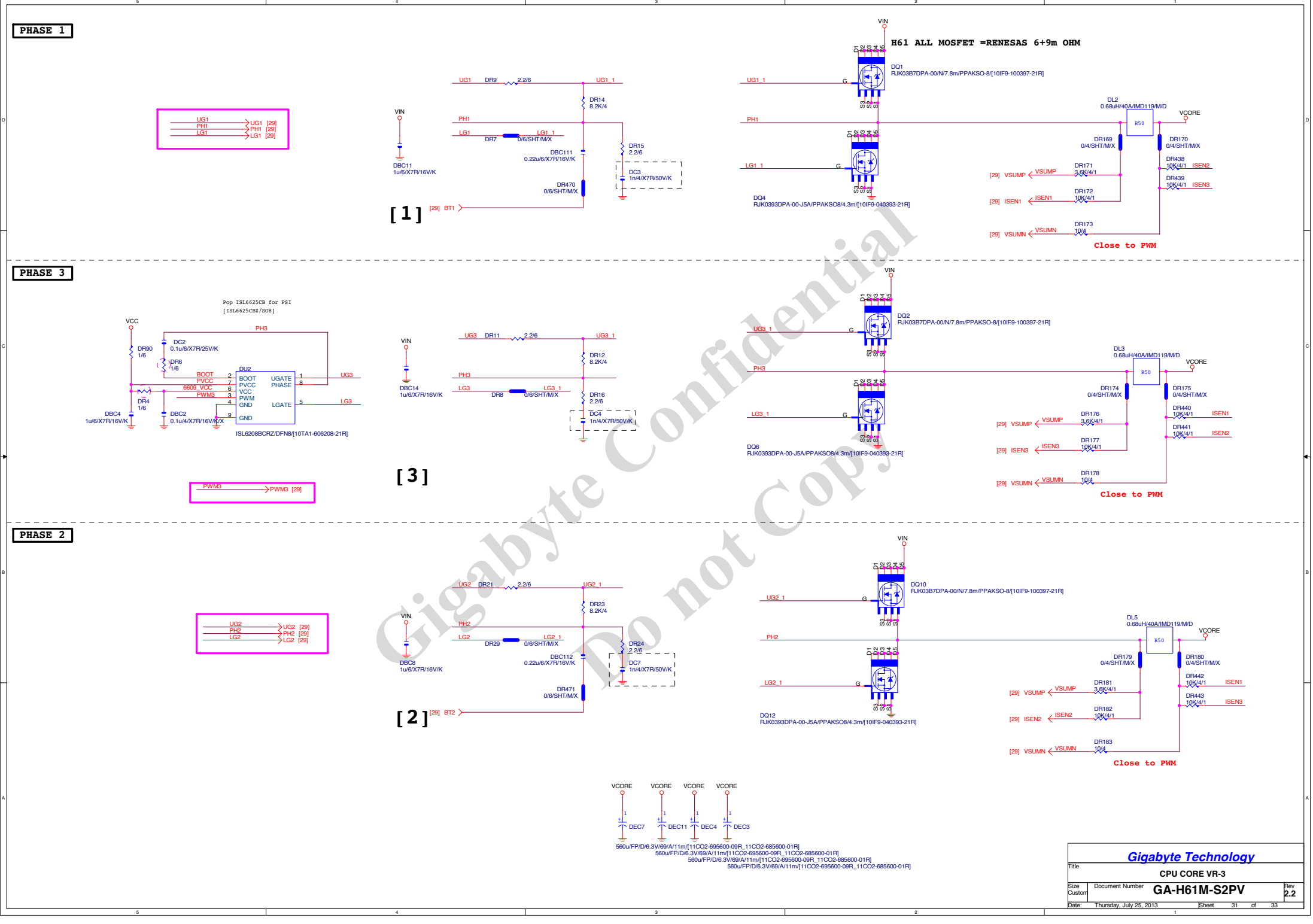
PHASE 1
H61 ALL MOSFET =RENESAS 6+9m OHM
DQ1
RJK03B7DPA-00/N/7.8m/PPAKSO-8/[10IF9-100397-21R]
DQ4
RJK0393DPA-00-J5A/PPAKSO8/4.3m/[10IF9-040393-21R]
DL2
0.68uH/40A/IMD119/M/D
VCORE
UG1 PH1 LG1
UG1 [29] PH1 [29] LG1 [29]
UG1 DR9 2.2/6 UG1_1
DR14 8.2K/4
VIN
DBC11
1u/6/X7R/16V/K
PH1
LG1 DR7 0/6/SHT/M/X LG1_1
DBC111
0.22u/6/X7R/16V/K
DR15 2.2/6
DC3
1n/4/X7R/50V/K
DR470
0/6/SHT/M/X
[29] BT1
[1]
DR169 0/4/SHT/M/X
DR170 0/4/SHT/M/X
DR438 10K/4/1 ISEN2
DR439 10K/4/1 ISEN3
[29] VSUMP VSUMP DR171 3.6K/4/1
[29] ISEN1 ISEN1 DR172 10K/4/1
[29] VSUMN VSUMN DR173 10/4
Close to PWM
PHASE 3
Pop ISL6625CB for PSI
[ISL6625CBZ/SO8]
VCC
DR90 1/6
DC2
0.1u/6/X7R/25V/K
DR6 1/6
PH3
DU2
BOOT PVCC VCC PWM GND GND
UGATE PHASE LGATE
UG3 LG3
6609 VCC PWM3
DR4 1/6
DBC4
1u/6/X7R/16V/K
DBC2
0.1u/4/X7R/16V/K
ISL6208BCRZ/DFN8/[10TA1-606208-21R]
PWM3
PWM3 [29]
UG3 DR11 2.2/6 UG3_1
DR12 8.2K/4
DBC14
1u/6/X7R/16V/K
PH3
LG3 DR8 0/6/SHT/M/X LG3_1
DR16 2.2/6
DC4
1n/4/X7R/50V/K
[3]
DQ2
RJK03B7DPA-00/N/7.8m/PPAKSO-8/[10IF9-100397-21R]
DQ6
RJK0393DPA-00-J5A/PPAKSO8/4.3m/[10IF9-040393-21R]
DL3
0.68uH/40A/IMD119/M/D
DR174 0/4/SHT/M/X
DR175 0/4/SHT/M/X
DR440 10K/4/1 ISEN1
DR441 10K/4/1 ISEN2
[29] VSUMP VSUMP DR176 3.6K/4/1
[29] ISEN3 ISEN3 DR177 10K/4/1
[29] VSUMN VSUMN DR178 10/4
Close to PWM
PHASE 2
UG2 PH2 LG2
UG2 [29] PH2 [29] LG2 [29]
UG2 DR21 2.2/6 UG2_1
DR23 8.2K/4
DBC8
1u/6/X7R/16V/K
PH2
LG2 DR29 0/6/SHT/M/X LG2_1
DBC112
0.22u/6/X7R/16V/K
DR24 2.2/6
DC7
1n/4/X7R/50V/K
DR471
0/6/SHT/M/X
[29] BT2
[2]
DQ10
RJK03B7DPA-00/N/7.8m/PPAKSO-8/[10IF9-100397-21R]
DQ12
RJK0393DPA-00-J5A/PPAKSO8/4.3m/[10IF9-040393-21R]
DL5
0.68uH/40A/IMD119/M/D
DR179 0/4/SHT/M/X
DR180 0/4/SHT/M/X
DR442 10K/4/1 ISEN1
DR443 10K/4/1 ISEN3
[29] VSUMP VSUMP DR181 3.6K/4/1
[29] ISEN2 ISEN2 DR182 10K/4/1
[29] VSUMN VSUMN DR183 10/4
Close to PWM
VCORE
DEC7 DEC11 DEC4 DEC3
560u/FP/D/6.3V/69/A/11m/[11CO2-695600-09R_11CO2-685600-01R]
560u/FP/D/6.3V/69/A/11m/[11CO2-695600-09R_11CO2-685600-01R]
560u/FP/D/6.3V/69/A/11m/[11CO2-695600-09R_11CO2-685600-01R]
560u/FP/D/6.3V/69/A/11m/[11CO2-695600-09R_11CO2-685600-01R]
Gigabyte Technology
Title
CPU CORE VR-3
Size Custom
Document Number
GA-H61M-S2PV
Rev 2.2
Date: Thursday, July 25, 2013
Sheet 31 of 33
Gigabyte Confidential
Do not Copy

TPM

N/A

LPT PORT

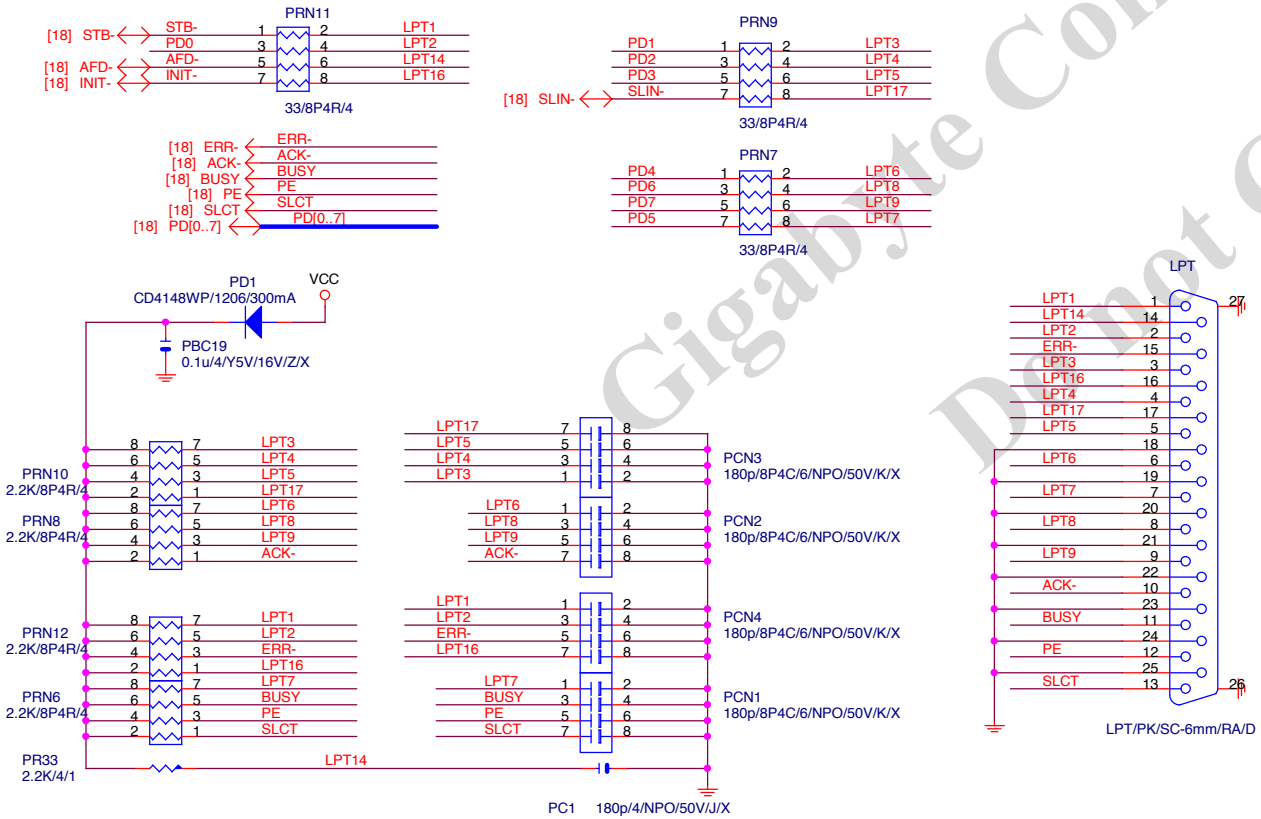

COMB

N/A

Gigabyte Confidential
Do not Copy

Gigabyte Technology			
Title	LPT		
Size Custom	Document Number GA-H61M-S2PV		Rev 2.2
Date: Thursday, July 25, 2013	Sheet 32 of 33		

DVI LEVEL SHIFT

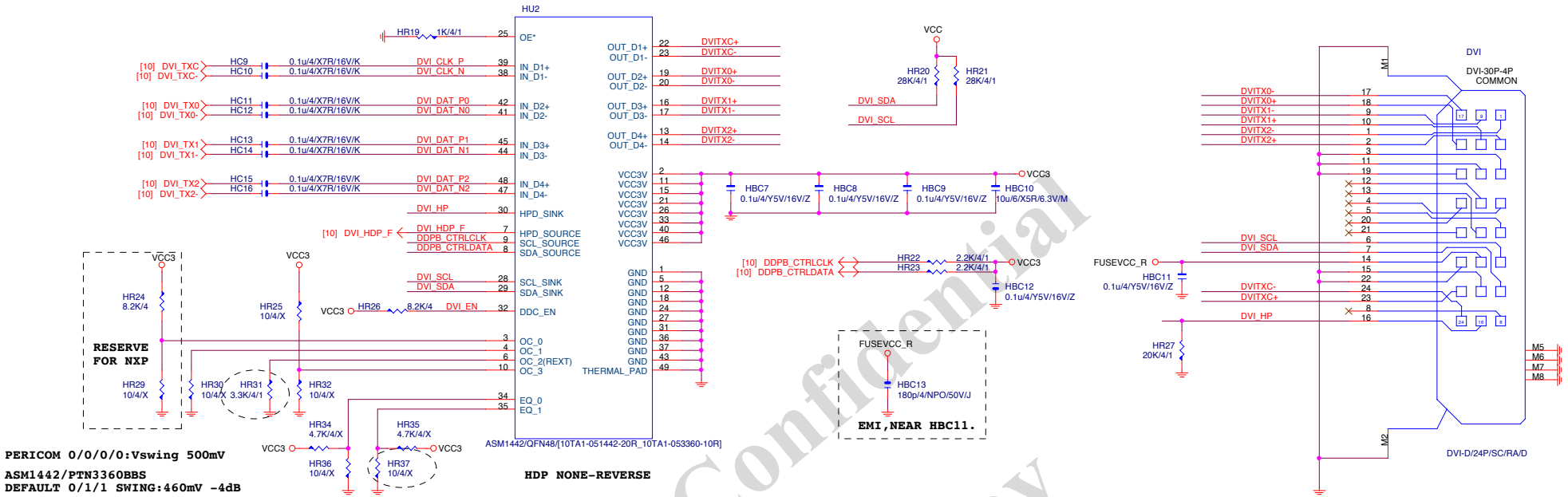

Gigabyte Confidential
Do not Copy

Gigabyte Technology			
Title	DVI		
Size Custom	Document Number GA-H61M-S2PV		Rev 2.2
Date: Thursday, July 25, 2013	Sheet 33 of 33		