ORDER No. PCZ1903009CE

Service Manual

LED TV

TX-49GXW904

LA78 Chassis

⚠ Warning

This service information is designed for experienced repair technicians only and is not designed for use by the general public. It does not contain warnings or cautions to advise non-technical individuals of potencial dangers in attempting to service a product. Products powered by electricity should be serviced or repaired only by experienced professional technicians. Any attempt to service or repair the product or products deal within this service information by anyone else could result in serious injury or death.

IMPORTANT SAFETY NOTICE

There are special components used in this equipment which are important for safety. These parts are marked ⚠ in the Schematic Diagrams, Circuit Board Diagrams, Explorer Views and Replacement Parts List. It is essential that these critical parts should be replaced with manufacturer´s specified parts to prevent shock, fire or other hazards. Do not modify the original design without permission of manufacturer.

Panasonic

© Panasonic Corporation 2019.
Unauthorized copying and distribution is a violation of law.

CONTENTS

SAFETY PRECAUTIONS 3
GENERAL GUIDE LINES..... 3
TOUCH – CURRENT CHECK..... 3
PREVENTION OF ELECTROSTATIC DISCHARGE (ESD) TO ELECTROSTATICALLY SENSITIVE (ES) DEVICES 4
ABOUT LEAD FREE SOLDER (PBF)..... 5
SUGGESTED PB FREE SOLDER..... 5
SERVICE NAVIGATION 6
CHASSIS BOARD LAYOUT..... 6
SERVICE HINTS 7
APPLICABLE SIGNALS..... 8
SPECIFICATIONS 9
TECHNICAL DESCRIPTION 11
SPECIFICATION OF KEY FOR DTCP-IP, C2MOD, CI+, CI+ECP, DIMORA, NETFLIX, WIDEVINE, HDCP1.4, HDCP2.2, NAGRA DRM 11
GENERAL INFORMATION 11
REPLACEMENT OF ICS..... 11
MODEL AND KEYS 11
USB HDD RECORDING 11
SETTING INSPECTION..... 12
CS MAINTENANCE MENU 13
SYSTEM INFORMATION 16
CUSTOMISED TV (SMART LOCK)..... 17
HOTEL MODE 20
DATA COPY BY USB MEMORY 22
DATA COPY FROM TV SET TO USB MEMORY..... 23
DATA COPY FROM USB MEMORY TO TV SET..... 24
OPTION BYTES DESCRIPTION 25
SELF CHECK 26
POWER LED BLINKING TIMING CHART 27
LCD PANEL TEST MODE 27
WIRING DIAGRAM..... 28
BLOCK DIAGRAM (1 OF 2)..... 29
PARTS LOCATION 1..... 31
PARTS LOCATION 2..... 32
LOCATION OF LEAD WIRING 33
LOCATION OF HEAT RUBBER AND GASKET 34
LOCATION OF HEAT RUBBERS..... 35
LOCATION OF GASKET 36
PACKING STRUCTURE..... 37
REPLACEMENT PARTS LIST NOTE..... 38
REPLACEMENT PARTS LIST..... 39
SCHEMATIC DIAGRAMS NOTE 72
A-BOARD (1 OF 26) SCHEMATIC DIAGRAM..... 73
P-BOARD (1 OF 3) SCHEMATIC DIAGRAM..... 99
K-BOARD SCHEMATIC DIAGRAM 102
GK-BOARD SCHEMATIC DIAGRAM 103
CONDUCTOR VIEWS 104

PI_30000884

Safety Precautions

General Guide Lines

1. When servicing, observe the original lead dress. If a short circuit is found, replace all parts which have been overheated or damaged by the short circuit.
2. After servicing, see to it that all the protective devices such as insulation barriers, insulation papers shields are properly installed.
3. After servicing, make the following touch current checks to prevent the customer from being exposed to shock hazards.

Touch-Current Check

1. Plug the AC cord directly into the AC outlet. Do not use an isolation transformer for this check.
2. Connect a measuring network for touch currents between each exposed metallic part on the set and a good earth ground such as a water pipe, as shown in Fig. 1.
3. Use Leakage Current Tester (Simpson 228 or equivalent) to measure the potential across the measuring network.
4. Check each exposed metallic part, and measure the voltage at each point.
5. Reserve the AC plug in the AC outlet and repeat each of the above measure.
6. The potential at any point (TOUCH CURRENT) expressed as voltage U1 and U2, does not exceed the following values:
   For a. c.: U1 = 35 V (peak) and U2 = 0.35 V (peak);
   For d. c.: U1 = 1.0 V,
   Note:
   The limit value of U2 = 0.35 V (peak) for a. c. and U1 = 1.0 V for d. c. correspond to the values 0.7 mA (peak) a. c. and 2.0 mA d. c.
   The limit value U1 = 35 V (peak) for a. c. correspond to the value 70 mA (peak) a. c. for frequencies greater than 100 kHz.
7. In case a measurement is out of the limits specified, there is a possibility of a shock hazard, and the equipment should be repaired and rechecked before it is returned to the customer.

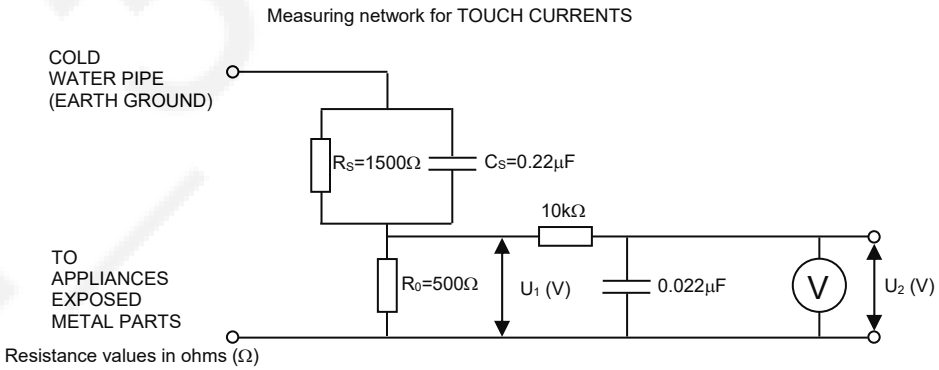

Fig. 1

Prevention of Electrostatic Discharge (ESD) to Electrostatically Sensitive (ES) Devices

Some semiconductor (solid state) devices can be damaged easily by static electricity. Such components commonly are called Electrostatically Sensitive (ES) Devices. Examples of typical ES devices are integrated circuits and some field-effect transistors and semiconductor "chip" components. The following techniques should be used to help reduce the incidence of component damage caused by electrostatic discharge (ESD).

1. Immediately before handling any semiconductor component or semiconductor-equipped assembly, drain off any ESD on your body by touching a known earth ground. Alternatively, obtain and wear a commercially available discharging ESD wrist strap, which should be removed for potential shock reasons prior to applying power to the unit under test.
2. After removing an electrical assembly equipped with ES devices, place the assembly on a conductive surface such as aluminum foil, to prevent electrostatic charge build up or exposure of the assembly.
3. Use only a grounded-tip soldering iron to solder or unsolder ES devices.
4. Use only an anti-static solder removal device. Some solder removal devices not classified as "anti-static (ESD protected)" can generate electrical charge sufficient to damage ES devices.
5. Do not use freon-propelled chemicals. These can generate electrical charges sufficient to damage ES devices.
6. Do not remove a replacement ES device from its protective package until immediately before you are ready to install it. (Most replacement ES devices are packaged with leads electrically shorted together by conductive foam, aluminum foil or comparable conductive material).
7. Immediately before removing the protective material from the leads of a replacement ES device, touch the protective material to the chassis or circuit assembly into which the device will be installed.
   Caution
   Be sure no power is applied to the chassis or circuit, and observe all other safety precautions.

8. Minimize bodily motions when handling unpackaged replacement ES devices. (Otherwise harmless motion such as the brushing together of your clothes fabric or the lifting of your foot from a carpeted floor can generate static electricity (ESD) sufficient to damage an ES device).

IMPORTANT SAFETY NOTICE

There are special components used in this equipment which are important for safety.
These parts are marked by ⚠ in schematic diagrams, exploded views and replacement parts list. It is essential that these critical parts should be replaced with manufacturer's specified parts to prevent shock, fire, or other hazards. Do not modify the original design without permission of manufacturer.

PI_3000884

About lead free solder (PbF)

Note: Lead is listed as (Pb) in the periodic table of elements.
In the information below, Pb will refer to Lead solder, and PbF will refer to Lead Free Solder.
The Lead Free Solder used in our manufacturing process and discussed below is (Sn+Ag+Cu).
That is Tin (Sn), Silver (Ag) and Copper (Cu) although other types are available.

This model uses Pb Free solder in it's manufacture due to environmental conservation issues. For service and repair work, we'd suggest the use of Pb free solder as well, although Pb solder may be used.
PCBs manufactured using lead free solder will have the PbF within a leaf Symbol

PbF stamped on the back of PCB.

Caution

- Pb free solder has a higher melting point than standard solder. Typically the melting point is 50 ~ 70 °F (30~40°C) higher. Please use a high temperature soldering iron and set it to 700 ± 20 °F (370 ± 10 °C).
- Pb free solder will tend to splash when heated too high (about 1100 °F or 600 °C).
  If you must use Pb solder, please completely remove all of the Pb free solder on the pins or solder area before applying Pb solder. If this is not practical, be sure to heat the Pb free solder until it melts, before applying Pb solder.
- After applying PbF solder to double layered boards, please check the component side for excess solder which may flow onto the opposite side. (see Fig.2)

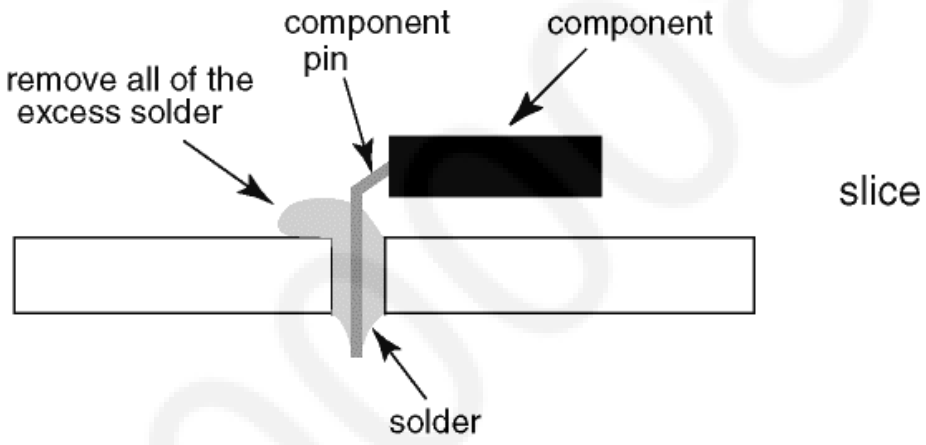

Fig.2

Suggested Pb free solder

There are several kinds of Pb free solder available for purchase. This product uses Sn+Ag+Cu (tin, silver, copper) solder. However, Sn+Cu (tin, copper), Sn+Zn+Bi (tin, zinc, bismuth) solder can also be used. (see Fig.3)

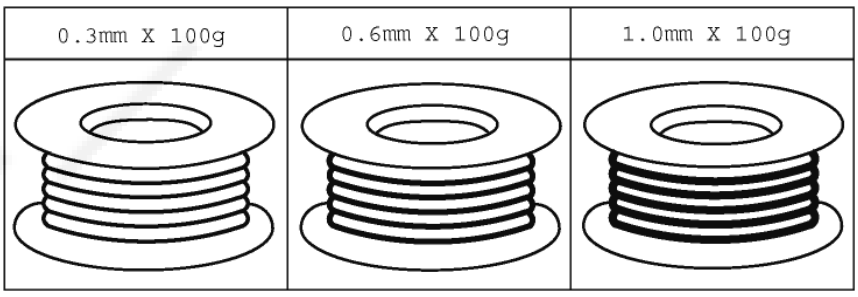

Fig.3

Service Navigation
Chassis Board Layout

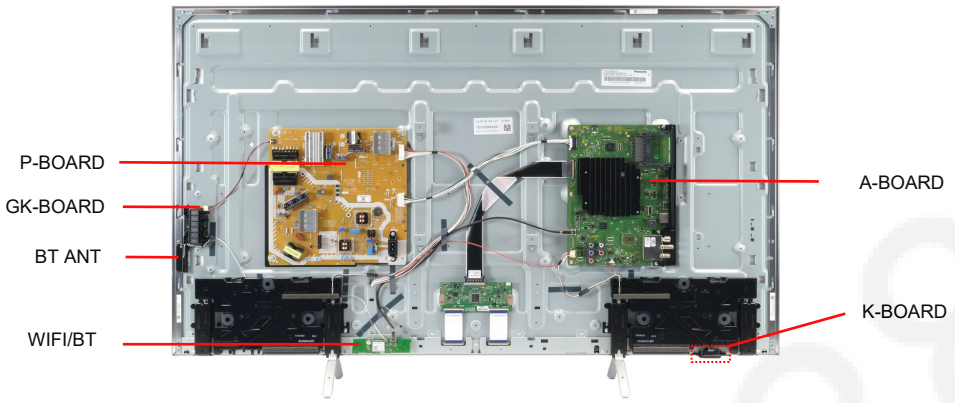

Board Name	Function
A-Board	AV Terminal, HDMI, USB, Ethernet, Digital Audio Out, CI Slot DUAL, TUNER A/DVB-T2/T/C/S/S2 DUAL, DVB-T2/T/C/S/S2 Dem, IC Main Processor, Speaker out, HP, eMMc Memory, DDR SDRAM
P-Board	Main Input, Power Supply, LED Driver
K-Board	Remote Receiver, Power and Timer LED, C.A.T.S
GK-Board	KEY Control, Power Switch
WIFI/BT	Wireless Module
BT ANT	BT Antenna

PL300G984

Service Hints

How to remove the pedestal assembly
How to remove the back cover

Lay the main unit face down and pull out the pedestals from TV. (see Fig.4)
Remove the Cable cover (Terminal) and Cable cover (Rear). (see Fig.5)

Fig.4

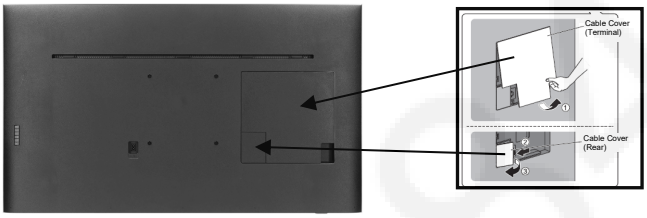

Fig.5

Remove the 5 fixing screws on the bottom side TV and the 6 screws on the rear side TV set. (see Fig.6)
Release the back cover from 6 side hooks and 6 top hooks. (see Fig.6)

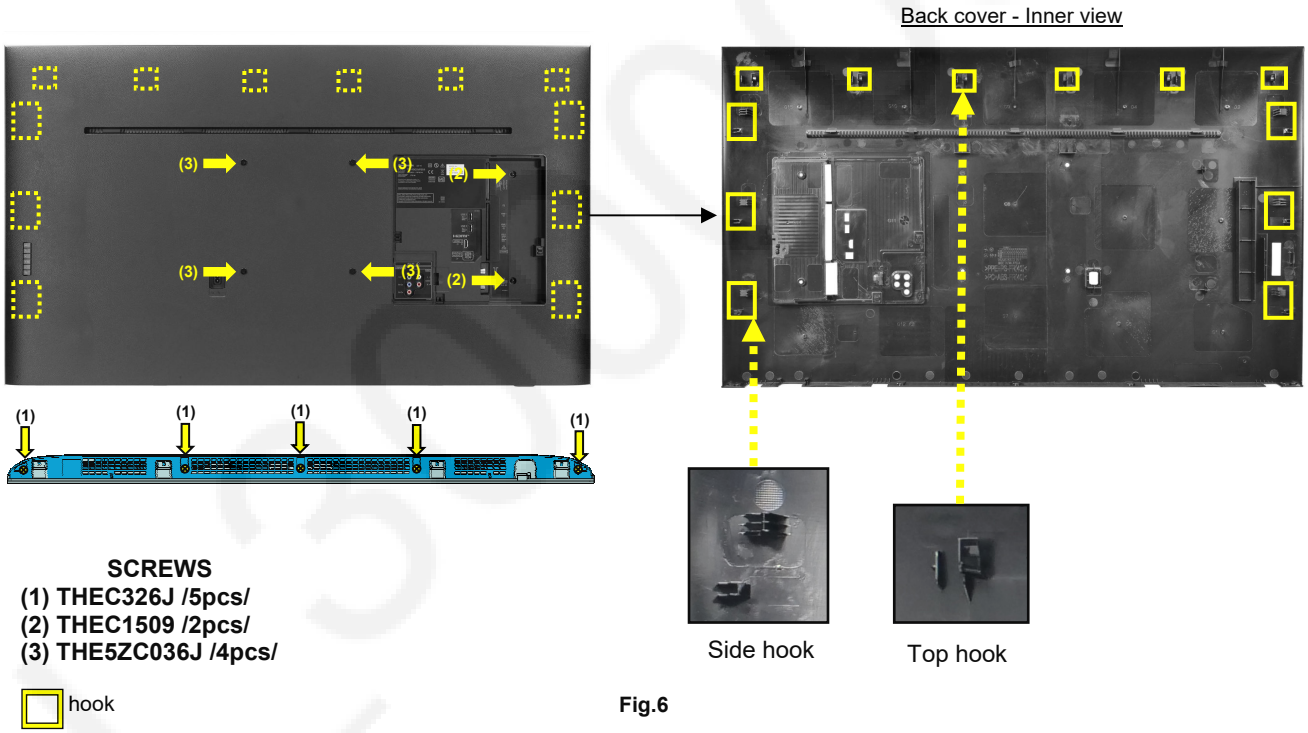

SCREWS
(1) THEC326J /5pcs/
(2) THEC1509 /2pcs/
(3) THE5ZC036J /4pcs/

hook

Fig.6

Remove the back cover. (see Fig.7)

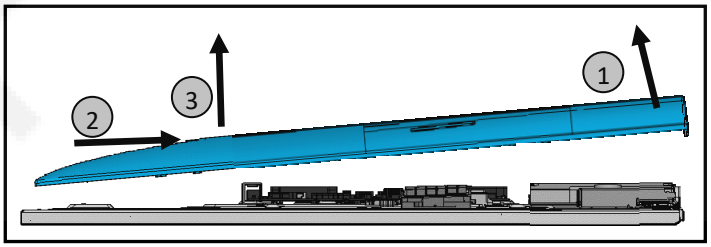

Fig.7

Caution: Before removing cover, receiver must be disconnect from mains.

Applicable Signals

Component (Y, Pb, Pr) (from AV terminal), **HDMI**

Signal name	COMPONENT	HDMI
525 (480) / 60i,60p	*	*
625 (576) / 50i, 50p	*	*
750 (720) / 60p, 50p	*	*
1,125 (1,080) / 60i, 50i	*	*
1,125 (1,080) / 60p, 50p, 24p		*
3,840 x 2,160 / 60p, 50p, 30p, 25p, 24p		*
4,096 x 2,160 / 60p, 50p, 30p, 25p, 24p		*

Note:

- Signals other than above may not be displayed properly.
- The above signals are reformatted for optimal viewing on your display.

PL300008X

Specifications

Power Source:	220-240V AC, 50 / 60Hz		
Rated Power Consumption:	179W		
Stand-by Power Consumption:	0.50W		
Aerial Impedance:	75Ω unbalanced, Coaxial Type		
Receiving System:	DVB-S/S2	Digital satellite services (MPEG2, MPEG4-AVC(H.264) and MPEG HEVC (H.265)) Receiver frequency range – 950 MHz to 2,150MHz DiSEqC – Version 1.0.	
	DVB-T/T2	Digital terrestrial services (MPEG2, MPEG4-AVC(H.264) and MPEG HEVC (H.265))	
	DVB-C	Digital cable services (MPEG2, MPEG4-AVC(H.264) and MPEG HEVC (H.265))	
	PAL I/H, B/G, SECAM B/G, L/L'	VHF E2-E12 VHF A-H (ITALY) CATV (S01-S05) CATV S11-S20 (U1-U10)	VHF H1-H2 (ITALY) UHF E21-E69 CATV S1-S10(M1-M10) CATV S21-S41 (HYPERBAND)
	PAL D/K, SECAM D/K	VHF R1-R2 VHF R6-R12	VHF R3-R5 UHF E21-E69
	PAL 525/60 M.NTSC NTSC	(AV only)z (AV only) (AV only)	
Satellite dish input:	Female F-type 75Ω x 2		
Aerial - Rear:	VHF/UHF		
Operating Conditions:	Temperature: 0°C ÷ 35°C Humidity: 20% ÷ 80% RH (non condensing)		
Terminals: AV IN (COMPONENT/VIDEO)			
VIDEO	Video (RCAx1)	1V p-p 75Ω	
	Video (RCAx3)	Y:1V p-p 75Ω (including synchronisation) Pb/Cb, Pr/Cr: ±0.35V p-p 75Ω	
AUDIO IN	Audio (RCAx2)	500mV rms 10kΩ (used for HDMI analogue audio IN)	
HDMI1/2/3	Type A Connectors HDMI 1 : 4K, Content Type, Deep Colour, x.v.Colour™ HDMI 2 : 4K, Content Type, Audio Return Channel, Deep Colour, x.v.Colour™ HDMI 3 : 4K, Content Type, Deep Colour, x.v.Colour™ This TV supports "HDAVI Control 5" function. For information about the valid format, refer to [eHelp].		
DIGITAL AUDIO OUT	PCM / Dolby digital, Fibre optic		
USB 1/2/3	USB1 : DC 5V, Max 900mA [SuperSpeed USB (USB 3.0)] USB2/3 : DC 5V, Max 500mA [Hi-Speed USB (USB 2.0)]		
ETHERNET	RJ45, IEEE802.3 10BASE-T / 100BASE-TX		
CARD SLOT	Common interface slot (Complies with CI+) x 2		
Wireless LAN: Standard Compliance	IEEE802.11a/n/ac, IEEE802.11b/g/n		
Frequency Range	IEEE802.11a/n/ac: 5.180 GHz – 5.320 GHz 5.500 GHz – 5.580 GHz 5.660 GHz – 5.700 GHz IEEE802.11b/g/n: 2.412 GHz – 2.472 GHz		
Security	WPA2-PSK (TKIP/AES) WPA-PSK (TKIP/AES) WEP (64 bit/128 bit)		
Bluetooth wirelless technology: Standard Compliance	Bluetooth 4.2		
Frequency Range	2.402 GHz – 2.480 GHz		

LCD screen:	TZLP288KKAA 3840 x 2160, 16:9 Visible Diagonal 1230mm
Audio Output:	20W (10W + 10W)
Headphones:	3.5mm, 8Ω Impedance
Accessories supplied:	Remote Control 2 x R6 Batteries

Dimensions:	Width:	Height:	Depth:
Including TV stand (Style1-2)	1 095mm	690mm	197mm
TV set only	1 095mm	638mm	44mm

Mass:	
Including TV stand	16.0kg
TV set only	15.5kg

Design and Specifications are subject to change without notice.
Mass and dimensions shown are approximate.

PL 3000008884

Technical Description

Specification of KEY for DTCP-IP, C2MOD, CI+, CI+ECP, DIMORA, NETFLIX, WIDEVINE, HDCP1.4, HDCP2.2, NAGRA DRM

General information:

1. eMMc Memory(IC8920) for spare parts has the seed of KEY for each.
2. The final KEY data will be generated by MTK IC (IC8000) when SELF CHECK was done and are stored in both MTK IC (IC8000) and eMMc (IC8920).
   All KEYs are not generated for all models.
   The necessary KEY are only generated and stored depend on the feature of models.

Replacement of ICs:

When MTK IC (IC8000) is replaced, eMMc (IC8920) should be also replaced with new one the same time.
When eMMc Memory(IC8920) is replaced, MTK IC (IC8000) is not necessary to be replaced the same time.
After the replacement of IC, SELF CHECK should be done to generate the final KEY data.

Note:

Keys HDCP1.4 (SINK) for MTK and HDCP2.2 (SINK) for MTK HDMI are not displayed in SELF CHECK.
Connect the 4K60Hz with HDCP2.2 compatible equipment to HDMI1/2/3 for verification of key [HDCP2.2 (SINK) for MTK HDMI].
Connect the 4K30Hz compatible equipment to HDMI1/2/3 for verification of key HDCP1.4 (SINK) for MTK.

How to SELF CHECK: While pressing [VOLUME (-)] button on the main unit, press the **MENU** button on the remote control for more than 3 seconds.
TV will be forced to the factory shipment setting after this SELF CHECK.

Model and Keys:

Model No.	Keys									
	DTCP-IP for MTK	C2MOD	CI+ V1.4 ECP for MTK	DIMORA	HDCP1.4 (SINK) for MTK	HDCP2.2 (SINK) for MTK	HDCP2.2 (SINK) for MTK HDMI	NETFLIX WIDEVINE MAC	CI+ECP for MTK (4K) 2019	NAGRA* DRM
TX-49GXW904	Yes	Yes	Yes	Yes	Yes	Yes	Yes	Yes	Yes	Yes

* Note: Because of NAGRA security requirement, rewriting NAGRA key is required when replacing IC8000 and IC8920 or IC8920 itself.

USB HDD Recording:

General information:

Digital TV programmes can be recorded in USB HDD.
C2MOD key generated in A-board by SELF CHECK binds TV and USB-HDD for communication.
That key is only one key for them. If the key is different, TV can not access USB-HDD.

Caution:

New key will be generated by following SELF CHECK and previous TV programmes recorded in USB HDD will not be viewed.
SELF CHECK: While pressing [VOLUME (-)] button on the main unit, press the **MENU** button on the remote control for more then 3 seconds.

Setting Inspection
Voltage Confirmation

A board

Description	Test point	Voltage
PNL12V	TP4059	12.0V ± 1.2V
SUB5V	TP5221	5.18V ± 0.25V
USB1	TP8711	5.10V ± 0.25V
USB2	TP8701	5.10V ± 0.25V
USB3	TP8705	5.10V ± 0.25V
USB-WiFi	TP8718	5.20V ± 0.28V
SUB3.3V	TP5201	3.31V ± 0.15V
HDMI3.3V	TP4514	3.35V ± 0.17V
SUB_AI_3.3V	TP2206	3.30V ± 0.17V
LNB_PWR1	TP6702	18.0V ± 1.0V
LNB_PWR2	TP6703	18.0V ± 1.0V
DEMOD1V0	TP5705	1.02V ± 0.10V
SUB_CI_5V	TP6406	5.1V ± 0.25V
SUB_CI_5V-B	TP6506	5.1V ± 0.25V
DSP1.8V	TP3404	1.8V ± 0.09V
EMMC1.8V	TP5240	1.80V ± 0.09V
STB3.3V	TP5290	3.36V ± 0.15V
VCCK1.0V	TP8200	1.02V ± 0.05V
CPU1.0V	TP8201	1.00V ± 0.10V
PMIC5.3V	TP8202	5.30V ± 0.25V
GPU1.0V	TP8204	1.00V ± 0.10V
STB1.2V	TP8203	1.20V ± 0.06V
STB1.05V	TP8205	1.05V ± 0.06V
DDR_VPP_2.5V	TP8206	2.51V ± 0.12V
DDR_VTT	TP8404	0.60V ± 0.05V

P board

Description	Test point	Voltage*	Voltage**
64V	TP7850-7852 and GND TP7407-7409	<1V	68V ± 10V
16V	TP7850-7852 and GND TP7407-7409	<1V	16V ± 0.6V
5V	TP7417 and GND TP7407-7409	5.25V ± 0.2V	5.25V ± 0.2V
PFC	TP7201-7203 and GND TP7204-7206***	<340V	390V ± 15V

* Connect AC 230V to JK7101 connector of P-PCB.
** Set main switch is ON (SUB_ON to 2.5V), PWM1-2 and BL_ON signals are connected 3.3V.
*** Beware , for testing of PFC use the GND (TP7204-7206) in Hot area of P board – risk of electric shock.

CS Maintenance Menu

MPU controls the functions switching for each IICs through IIC bus in this chassis. The following setting and adjustment can be adjusted by remote control in Service Menu

How to enter into CS Maintenance Menu

Purpose

After exchange parts, check and adjust the contents of adjustment mode.

While pressing [VOLUME (-)] button on the main unit, press the [RED] button on the remote control for 3 times within 2 seconds.

Note:

Input 2D signal to enter CS Maintenance Menu.

How to exit

Press the [EXIT] button on the remote control.

CS Maintenance Menu	
OPT	
EDID CLK	
DRV CHECK	
WB-ADJ	
MODEL NAME	

Key Command

- Press the (↑/↓/→/←) button to step up/down/right/left through the functions and adjustments
- Press the **OK** button to change the adjustment values.
- Press the **RETURN** button for return to the main menu.

OPT

1.Select [OPT] in CS Maintenance Menu.
2.Press [OK] button or Cursor key [Right] on the remote control.

CS Maintenance Menu		7 6 5 4 3 2 1 0
OPT	OPT1	0 0 0 0 0 1 0 0
EDID CLK	OPT2	1 1 1 0 1 1 1 0
DRV CHECK	OPT3	0 0 0 0 0 0 0 1
	OPT4	0 0 0 0 0 0 0 0
WB-ADJ		
MODEL NAME		

Exit:

Press the [EXIT] button or the [RETURN] button on the remote control.

EDID Clock

1.Select [EDID CLK] in CS Maintenance Menu.
2.Press [OK] button or Cursor key [Right] on the remote control.

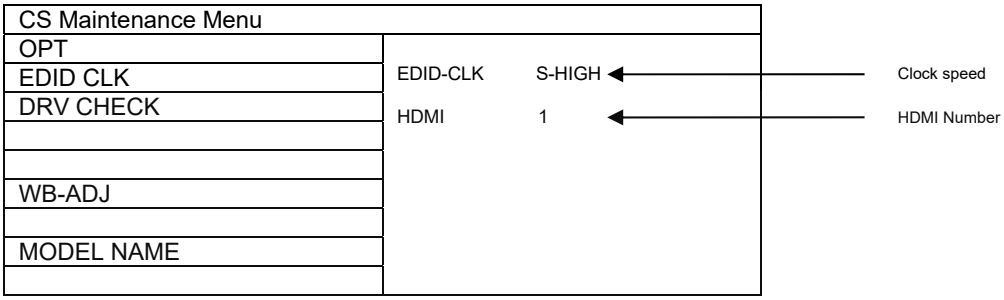

Exit:
Press the [EXIT] button or the [RETURN] button on the remote control.

DRV Check (USB HDD Drive Check)

1.Select [DRV CHECK] in CS Maintenance Menu.
2.Press [OK] button or Cursor key [Right] on the remote control.

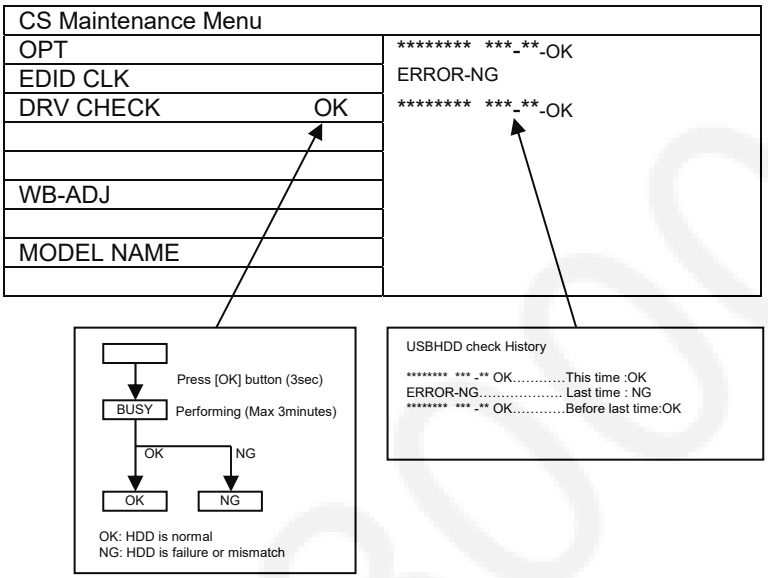

Exit:
Press the [EXIT] button or the [RETURN] button on the remote control.

WB-ADJ

1.Select [WB-ADJ] in CS Maintenance Menu.
2.Press [OK] button or Cursor key [Right] on the remote control.

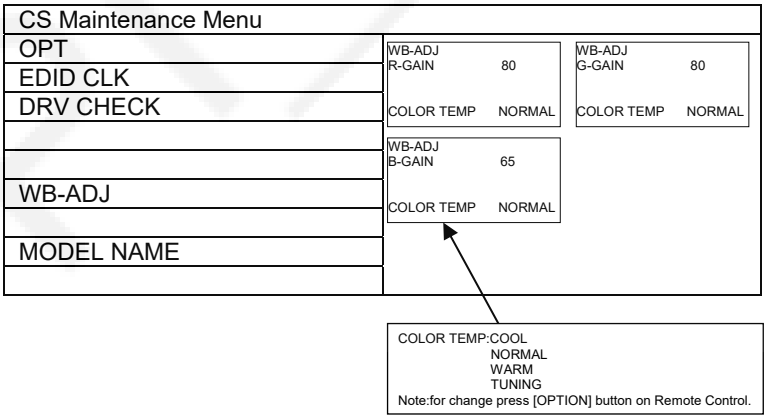

Exit:
Press the [EXIT] button or the [RETURN] button on the remote control.

MODEL NAME

From 2019, it is necessary to send the Complete Model Name to Control4 for requirement from Control4.
The Model Name is displayed at selfcheck screen.
The Model Name can contain up to 16 characters and can be rewritten.

1. Select [MODEL NAME] in CS Maintenance Menu.
2. Press [OK] button or Cursor key [Right] on the remote control.

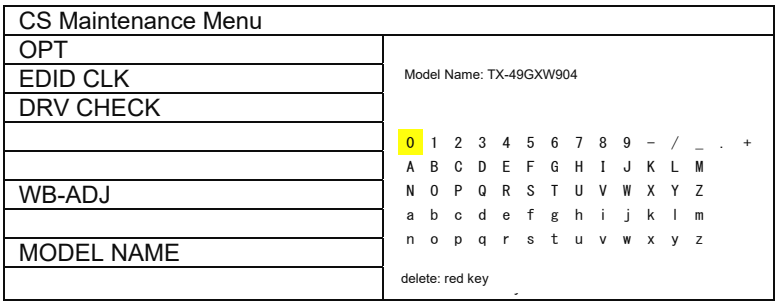

Exit:
Press the [EXIT] button or the [RETURN] button on the remote control.

PL30000884

System Information

How to access

1. While pressing [MENU] button on the remote control.
2. To select [Help] and then to select [System Information].(see Fig.8, Fig.9)

* Sample only

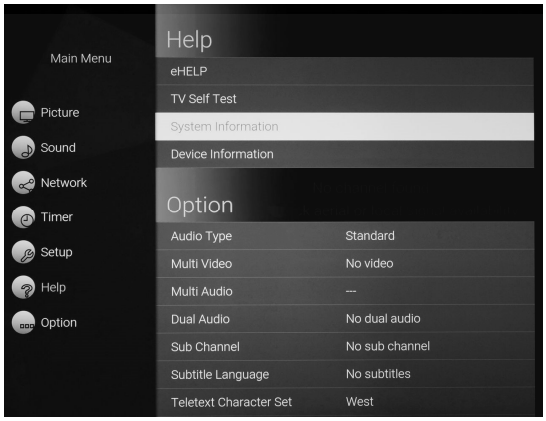

Fig.8

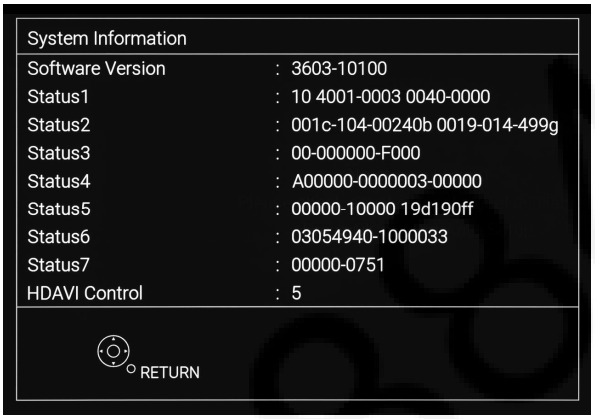

Fig.9

System Information			
SW version	3603-10100	3603 10100	Peaks SW STBY SW
Status1	10 4001-0003 0040-0000	10 4001-0003 0040-0000	Outer model ID Inner model ID Panel inch size
Status2	001c-104-00240b 0019-014-499g	001c 104 00240b 0019 014 499g	LSI Package LSI Release Model data version AQ Package AQ Release Model data version
Status3	00-000000-F000	00 00 00 00 F	Number of bad block in NAND Flash (dec) Peaks reboot counter System crash counter Emergency (SOS) counter Peaks NAND Maker ID
Status4	A00000-0000003-00000	A 00000 0000003 00000	Power-On period (A<=100hrs, B<=200hrs, C>200hrs) Total Power-On time (dec, max is 65535) Power-On timer (dec, max is 1048575) Fixed (always)
Status5	00000-10000 19d190ff	0 0 0 0 0 1 0000 19d190ff	SOS history (latest) SOS history (last time) SOS history (last but one) SOS history (2nd time after shipping) SOS history (1st time after shipping) Self-check _0-never selfcheck 1-production selfcheck by “FF” or USCM 2-user selfcheck by pressing “OK” Fixed (always) Panel ID
Status6	03054940-1000033	03054940 1000033	Peaks EEPROM version STM EEPROM version
Status7	00000-0751	00000 0751	STM ROMCOR version AJAX_CE version
HDAVI Control	5	5	VIERA Link version is displayed

How to exit

Press the [RETURN] button on the remote control.

Customised TV (Smart Lock)

1. Purpose
   Smart lock feature provides a method for Panasonic dealer to operate the TV in specific customised mode and allows to hide functions to reduce the complexity when customer is using the product furthermore, dealers should have the opportunity to copy such settings to another TV set.

2. Access command to the Customised TV setup menu.
   Smart Lock (Customised TV) Menu is only enabled on DVB input. Menu will not launch on Analogue or any External input.
   In order to display the Customised TV setup menu,please enter the following command:
   [TV] : Vol.[Down] + [REMOTE] : Green button (3 times)
   Then, the Customised TV setup menu is displayed.

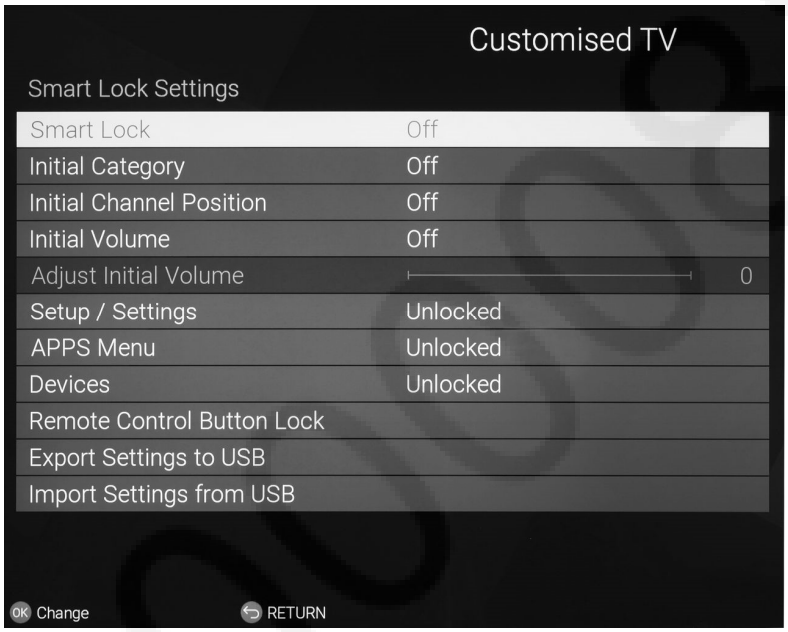

ITEM	Function	Note
Smart Lock	Selection: ON/OFF	Smart Lock (Customised TV) Menu is only enabled on DVB input. Menu will not launch on Analogue or any External input.
Initial Category	Selection: Off/All DVB Channels/Free TV/FreeRadio/HDTV/UHDTV/ Favourites 1/Favourites 2/ Favourites 3/ Favourites 4 *Activated: pressing OK.	If customer press OK, the selected category will be the default list for any last digital TV input at power up. If category is invalid on some input => Don't care. Invalid initial category is not set on TV start up, instead last category is used but invalid initial category entry remains in Smart Lock Menu because it may be valid for other input by intention.
**Initial Channel Position	Selection: Off/Enter *Activated: pressing OK. Range: 0 to 9999	Do not check channel number on input. Selected position will be default for all DVB input independent of Category. If position is invalid on some list => Don't care. Invalid initial position is not set/tuned on TV start up, instead last position is used but invalid initial position entry remains in Smart Lock Menu because it may be valid for other lists by intention.
Initial Volume	Selection: Off/ON *Activated: pressing OK.	Adjust Initial Volume item accessible/effective if Initial Volume is set to “On”.
**Adjust Initial Volume	Range: 0 to 100	Adjusting Smart Lock Initial Volume may also modify hotel mode Max Volume setting if Initial Volume is set higher than Max Volume. Value will be reset to "0" if setting Initial Volume to Off.
Setup / Settings	Selection: Unlocked/Locked *Activated: pressing OK.	When locked: - Setup and Network Setup will be hidden in Menu and therefore not accessible anymore. - Settings Tab on Home Screen is not displayed. - Option key - Context Menu is not displayed at all if no item. Following items are hidden (Pin to HOME/Unpin from Home/Move card/Lock card/Delete/Info) - Browser (Bookmark/Show your bookmarks/Menu) are inactive.
Apps Menu	Selection: Unlocked/Locked *Activated: pressing OK.	When locked: - Apps card will not displayed in Home Screen. - APPS and MY APP button in Remote Control Button Lock are locked automatically. - Search tab, APPS card invisible automatically. But lock/unlock can be selected individually for each button in Remote Control Button Lock.
Devices	Selection: Unlocked/Locked *Activated: pressing OK.	Unlocked/Locked of devices. If Devices locked devices Card not displayed in TV HOME tab.
Remote Control Button Lock	Press OK to show button list. Selection: PICTURE/TV/ AV/ TEXT/ STTL/ ASPECT/APPS/ HOME/GUIDE/ OPTION/ COLOR KEYS/ 0..9/ eHELP/LAST VIEW/ AV CONTROL/ MY APP/OFF TIMER/LIST/MIC	Button will be non functional if check box is checked.
Export Settings to USB	Press OK for Exporting Setting to USB device	Before exporting data: Main POWER OFF/ON (at Sidepanel) is required if Settings have been modified! Channel List is not exported. Only eeprom settings exported. Additionally last Selected Home Screen is also copied. Additionally Smart Banner On/Off setting is also copied (Ref: Setup/Display Settings/Smart Banner)
Import Settings from USB	Press OK to Import Settings. Press EXIT to return.	Channel List is not imported. Only eeprom settings imported. Additionally last Selected Home Screen is also copied. Additionally Smart Banner On/Off setting is also copied. (Ref: Setup/Display Settings/Smart Banner) After importing data: Main POWER OFF/ON (at Sidepanel) is required for imported settings to become effective!

**

"Adjust Initial Volume" and "Initial Channel Position" cannot be reset on Shipping Condition because settings are shared with Hotel Mode. (Hotel Mode settings are not beeing reset by Shipping Condition).

Note:
Main POWER OFF/ON (at TV Sidepanel) is always required for changes to become effective!

Hotel copy vs. Smart Lock copy:

Menu	Data	Compatible
Hotel Copy	TV setup is cloned:eeprom (incl. smart lock), svldb	Model ID is checked => Same model only
Smart Lock	Copy Smart Lock settings only	Shall be model independent (copy to all same years models at least)

Coexistence of Hotel Mode and Smart Lock:

Hotel Mode	Smart Lock	Behaviour
Off	Off	Normal TV mode, no locks.
Off	On	Apply Smart Lock settings only. Hotel Mode exclusive settings are not active. Shared settings (e.g. Initial Position) may be also updated in Hotel Mode menu when changed in Smart Lock menu. Shared settings may be changed in Hotel Mode menu even hotel mode is not active. (This will not be restricted).
On	Off	Apply Hotel Mode settings only. Smart lock exclusive settings are not active. Shared settings (e.g. Initial Position) may be also updated in Smart Lock menu when changed in Hotel Mode menu. Shared settings may be changed in Smart Lock menu even smart lock is not active. (This will not be restricted).
On	On	All settings are active, shared settings can still be changed within both menus.

Other Information:

- Network Download NWDL cannot be announced if Apps button is locked.

3. To exit the “Customised TV”:
   The main power OFF/ON (at TV side panel).

PL3000

Hotel Mode

1. Purpose
   Restrict a function for hotels.
2. Access command to the Hotel mode setup menu.
   In order to display the Hotel mode setup menu, please enter the following command (within 2 second).
   [TV] : Vol.[Down] + [REMOTE] : AV (3 times)
   Then, the Hotel mode setup menu is displayed.

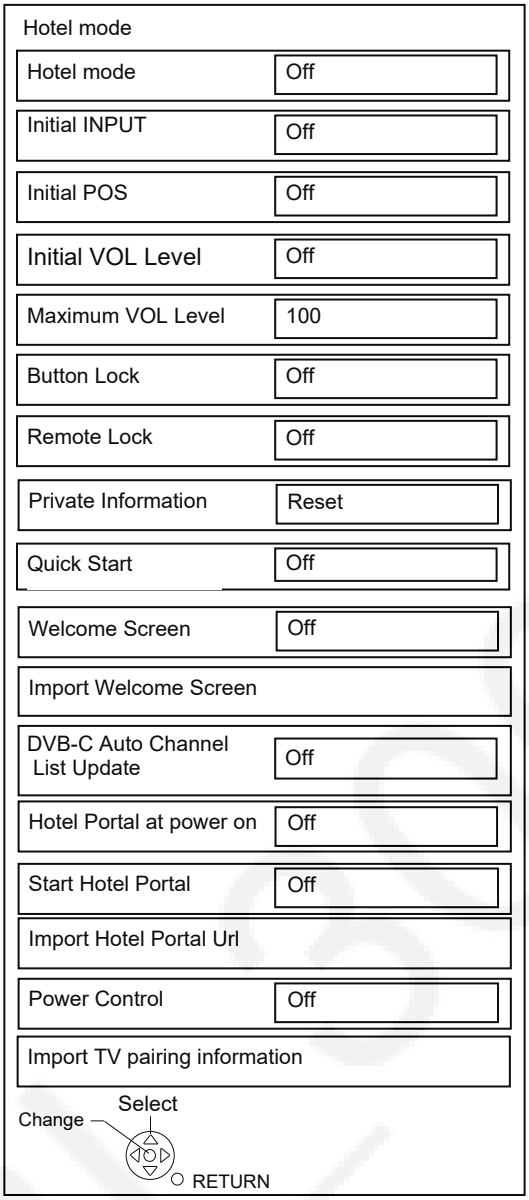

3. To exit the “Hotel mode”:
   Switch off the power with the [POWER] button on the main unit or the [POWER] button on the remote control or pressing [EXIT] button on the remote control.

4. Explain the Hotel mode setup menu.

*Quick Start setting can by copied to other TVs using hotel model clone.
Clone from a product whose default configuration has been changed may result in higher energy consumption of the product.

**This item cannot be selected unless Hotel Portal URL was set.
The auto and manual startup settings are independent from each other, e.g. it is possible to have only auto startup but no manual startup set…

*** Only when both Hotel Mode and Power Control are On.

ITEM	Function
Hotel Mode	Select hotel mode ON/OFF
Initial INPUT	Select input signal modes. Set the input, when each time power is switched on. Selection: Off/DVB-T/DVB-C/DVB-S/AV/HDMI1/HDMI2/HDMI3 - Off: give priority to the last memory. However, Euro Model is compulsorily set to TV.
Initial POS	Select programme number. Selection: Off/0 to 99 - Off: give priority to the last memory
Initial VOL	Adjust the volume when each time power is switched on. Selection/Range: Off/0 to 100 - Off: give priority to the last memory
Maximum VOL Level	Adjust maximum volume. Range: 0 to 100
Button Lock	Select local key conditions. Selection: Off/SETUP/MENU - Off: altogether valid - Setup: only F-key is invalid (Tuning guide (menu) can not be selected.) - MENU: only F-key is invalid (only Volume/Mute can be selected.)
Remote Lock	Select remote control key conditions. Selected: Off/SETUP/MENU/VOD - Off: altogether valid - Setup: only Setup menu is invalid MENU: Picture/Sound/Setup menu are invalid VOD: Netflix service is invalid
Private Information	Select private information for VIERA Cast is Keep or Reset if Hotel mode is set to [On] when TV power on. Selection : Keep/Reset - Keep: private information for VIERA Cast is keep - Reset: private information for VIERA Cast is reset
Quick Start *	TV will operate in active standby if Quick Start is “On” and Hotel Mode is enabled. Orange LED indicates active standby. Selection: On/Off **- Note**: Changing the default configuration may result in higher energy consumption of the product.
Welcome Screen	Can be switched on only if “Welcome screen” was installed. Otherwise, item is inactive. Welcome Image will be displayed as soon as possible (approx. 6 seconds after power-up).
Import Welcome Screen	Welcome message must be loaded and activated in the hotel mode. The file name must be “welcome.jpg”(file size no bigger than 1MB). Upload “welcome.jpg” to TV set form USB stick. Welcome Screen will be displayed at power-up and will disappear automatically or may be terminated by any key press. Welcome image can be cloned to other TV sets using “hotel.pwd” clone feature.
DVB-C Auto Channel List Update	The possibility to enable the automatic service list update and to the “New service found” pop-up message (or disable “new service found” popup . Selection: On/Off
Hotel Portal at power on **	Automatically startup Hotel Portal when TV powers up. Selected: Off (default)/On
Start Hotel Portal **	Allow user to start a Portal-Application with dedicated key. Selection: Off/Home/Apps/Menu/My App
Import Hotel Portal URL	Import Hotel Portal with USB: Filename must be “hotel_url.txt” Content of hotel_url.txt: e.g. http://192.168.1.1/hotel/index.html Located in root directory. Existing file will be overwritten. Activation: turn Off/On TV set. File will be deleted at shipment : While pressing [VOLUME (-)] button on the main unit, press [MENU] button on the remote control for more than 3 seconds.
Power Control***	Power Control option will enable to make TV always On, when Electric power provided from AC Cable. Selected: On/Off - Off: TV start-up on last mode (default). - On: TV power is always on.

⇩

ITEM	Function
Import TV pairing information	Import TV pairing information with USB. Filename must be “tv_pairing_hotel.txt” located in root directory. Content of “tv_pairing_hotel.txt”: Pairing ID is “APPID:0x00*****” --hexadecimal text format (A～F, a～f, 0～9) --just 18 characters Pairing Key is “KEY:0x****” --hexadecimal text format (A～F, a～f, 0～9) --just 32 characters e.g. APPID:0x0041424344484f54454c KEY:0x454e435259505445444b455941424344 **Note:** Introduced secure communication between TV and Hotel command server. Only paired Hotel command server can control TV and command to TV must be encrypted.

PL300008841

Data Copy by USB Memory

Purpose

a) Board replacement (Copy the data when exchanging A-board):

When exchanging A-board, the data in original A-board can be copied to USB Memory and then copy to new A-board.

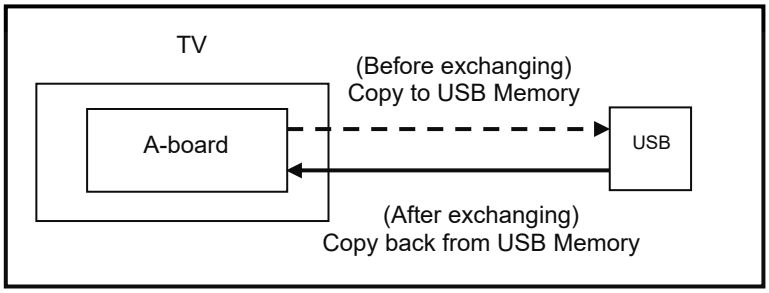

Following data can be copied.
- User setting data
- (inc. Hotel mode setting data)
- Channel scan data
- Adjustment and factory preset data

b) Hotel (Copy the data when installing a number of units in hotel or any facility):

When installing a number of units in hotel or any facility, the data in master TV can be copied to USB Memory and the copy to other TVs.

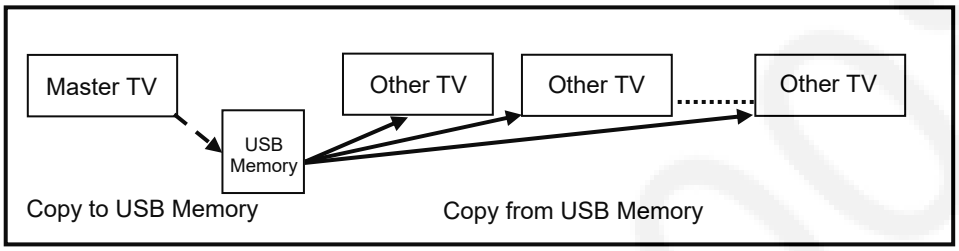

Following data can be copied.
- User setting data
- (inc. Hotel mode setting data)
- Channel scan data

Preparation

Make pwd file as startup file for (a) or (b) in an empty USB Memory.

1. Insert an empty USB Memory to your PC.
2. Right-click a blank area in a USB Memory window, point to New, and then click text document. A new file is created by default (New Text Document.txt).
3. Right-click the new text document that you just created and select rename, and then change the name and extension of the file to the following file name (a) or (b) and press ENTER.

File name:

(a) For Board replacement: boardreplace.pwd
(b) For Hotel: hotel.pwd

Note:

Please make only one file to prevent the operation error.
No any other file should be in USB Memory.

Data Copy from TV set to USB Memory

1. Turn on the TV set.
2. Insert USB Memory with a startup file (pwd file) to USB Terminal.
   On-screen Display will be appeared according to the startup file automatically.
3. Input a following password for (a) or (b) by using remote control.
   (a) For Board replacement: 2770
   (b) For Hotel: 4850
   Data will be copied from TV set to USB Memory.
   It takes around 1 to 2 minutes maximum for copying.
4. After the completion of copying to USB Memory, remove USB Memory from TV set.
5. Turn off the TV set.

Note:

Following new folder will be created in USB Memory for data from TV set.

(a) For Board replacement: user_setup
(b) For Hotel: hotel

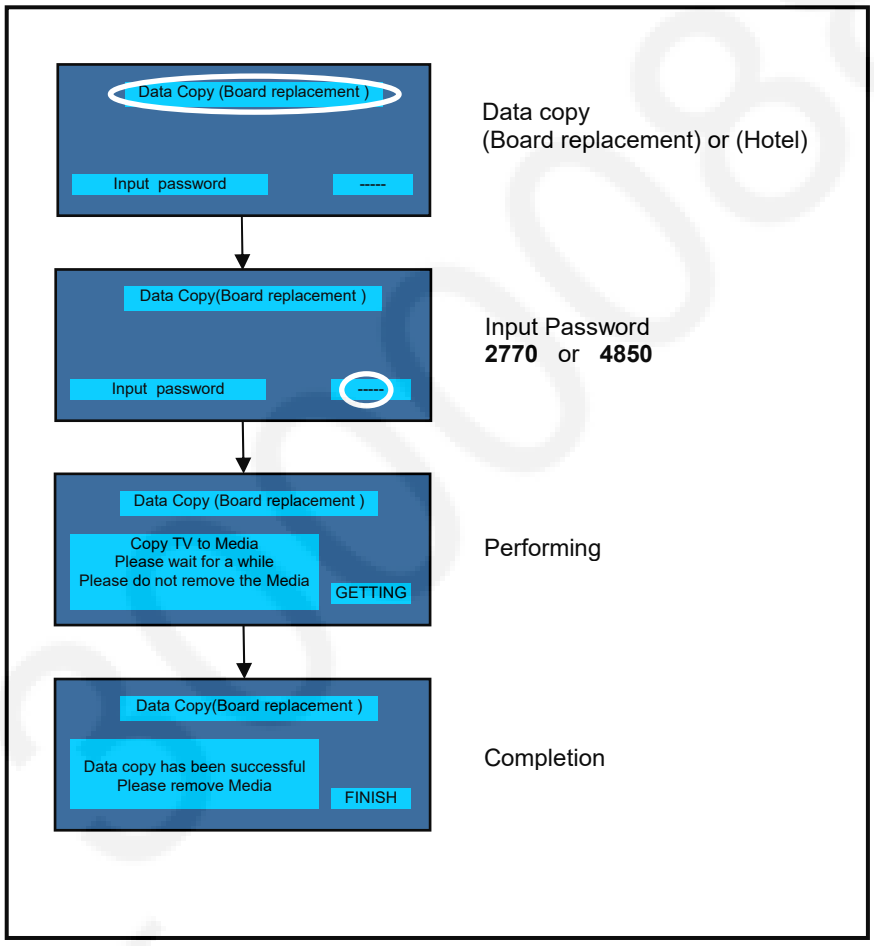

Data Copy from USB Memory to TV set

1. Turn on the TV set.
2. Insert USB Memory with Data to USB Terminal.
   On-screen Display will be appeared according to the Data folder automatically.
3. Input a following password for (a) or (b) by using remote control.
   (a) For Board replacement: 2771
   (b) For Hotel: 4851
   Data will be copied from USB Memory to TV set.
4. After the completion of copying to USB Memory, remove USB Memory from TV set.
   (a) For Board replacement: Data will be deleted after copying (Limited one copy).
   (b) For Hotel: Data will not be deleted and can be used for other TVs.
5. Turn off the TV set.

Note:

1. Depending on the failure of boards, function of Data for board replacement does not work.
2. This function can be effective among the same model numbers.

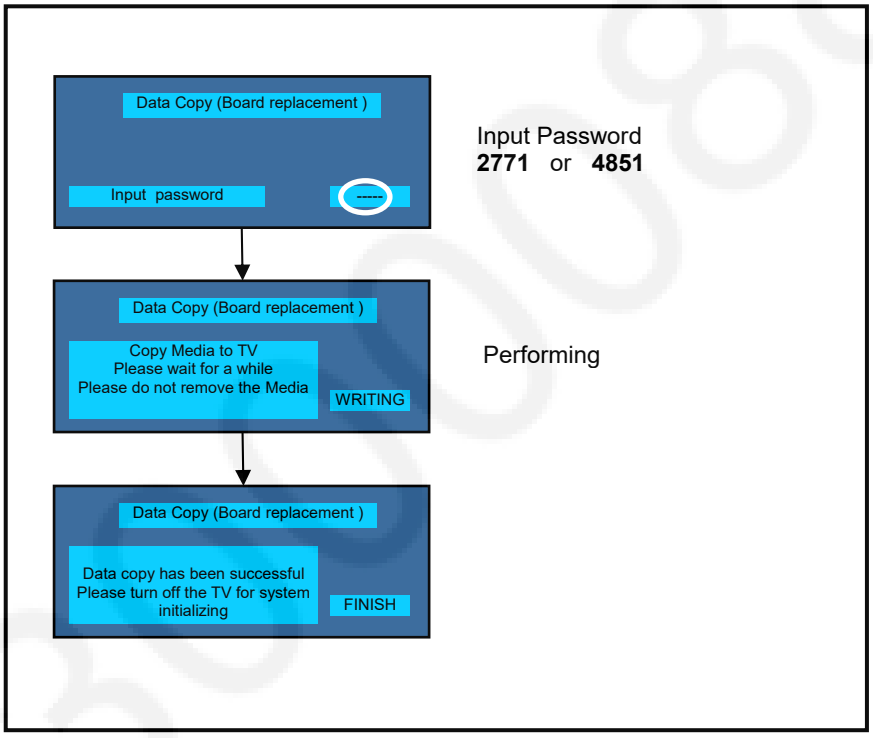

Option Bytes Description

OPTION1			
	b1	TEXT Ch Refresh	ON (1) / OFF (0)
	b2	ID-1	ON (1) / OFF (0)
	b3	Macrovision Auto-judge	ON (1) / OFF (0)
	b5	Reserved	-
	b6	Enable HDMI force reset	ON (1) / OFF (0)
	b7	Reserved	-
OPTION2			
	b0	Adjust Igain enable	ON (1) / OFF (0)
	b1	A2 BG enable (5.5MHz)	ON (1) / OFF (0)
	b2	A2 DK1 enable (6.26MHz)	ON (1) / OFF (0)
	b3	A2 DK3 enable (5.742MHz)	ON (1) / OFF (0)
	b4	NICAM scan	ON (1) / OFF (0)
	b5	NICAM BG enable (5.5MHz)	ON (1) / OFF (0)
	b6	NICAM I enable (6.0MHz)	ON (1) / OFF (0)
	b7	NICAM DK enable (6.5MHz)	ON (1) / OFF (0)
OPTION3			
	b0	NICAM priority	ON (1) / OFF (0)
	b1	Reserved	-
	b2	Reserved	-
	b3	A2 DK2 enable	ON (1) / OFF (0)
	b4	Inhibition of countermeasure for SIF signal drop	ON (1) / OFF (0)
	b5	Get onid from physical CH (CHINA)	ON (1) / OFF (0)
	b6	SSU search enable for HOTEL model	ON (1) / OFF (0)
	b7	SASO mute (ASIA)	ON (1) / OFF (0)
OPTION4			
	b0	Countermeasure for Taiwan NTSC noise sound	ON (1) / OFF (0)
	b2	3DYC color motion detect	ON (1) / OFF (0)
	b3	RF Clamp Current minimum (TAIWAN)	ON (1) / OFF (0)
	b4	Reserved	-
	b5	Reserved	-
	b6	Reserved	-
	b7	Enable workaround for Polsat CAM problem (POLAND)	ON (1) / OFF (0)
OPTION16			
	b0	PIP/MW (derivate models)	ON (1) / OFF (0)
	b3	Surround ”Cinema surround Pro” sound menu enable (derivate models)	ON (1) / OFF (0)
	b5	Control4 function enable	ON (1) / OFF (0)
	b6	Reserved	-
	b7	Reserved	-

Self Check

How to access

Self-check indication only:
While pressing [VOLUME (-)] button on the main unit, press [BLUE] button on the remote control.

Self-check indication and forced to factory shipment setting:
While pressing [VOLUME (-)] button on the main unit, press [MENU] button on the remote control for more than 3 seconds.

How to exit

Press the the power with the [POWER] button on the main unit for about 5 seconds.

TX-49GXW904

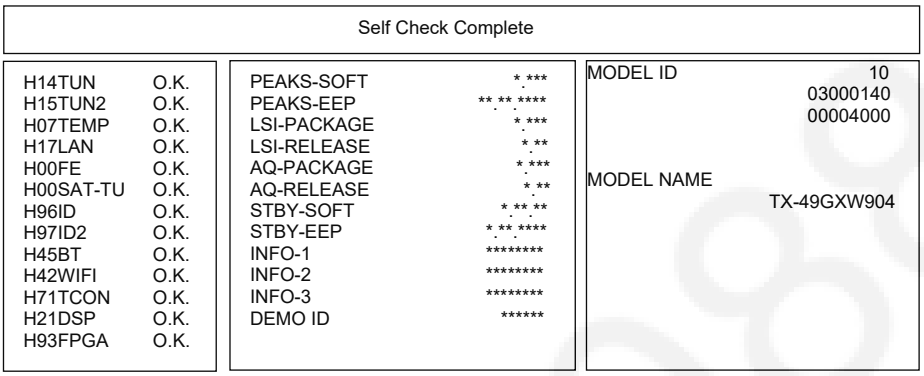

Display	Ref. No.	Description	P.C.B.
H14TUN	TU6708	DUAL TUNER A/DVB-T2/T/C/S/S2	A-Board
H15TUN2	TU6708	DUAL TUNER A/DVB-T2/T/C/S/S2	A-Board
H07TEMP	IC5912	Temperature Sensor	A-Board
H17LAN	IC8000/IC8920	Ethernet/MAC	A-Board/LAN
H00FE	IC6808/IC6807	DVB-T2/T/C/S/S2 Demodulator	A-Board
H00SAT-TU	TU6708	DUAL TUNER A/DVB-T2/T/C/S/S2	A-Board
H96ID	IC8920	CI+,CI+ECP,HDCP2.2, DTCP-IP, C2MOD	A-Board
H97ID2	IC8920	Dimora, Netflix, Widevine, Nagra DRM	A-Board
H45BT *	IC8000 N5HBZ0000123	IC Main Processor Wireless Module	A-Board Wireless Module
H42WIFI	IC8000 N5HBZ0000123	IC Main Processor Wireless Module	A-Board Wireless Module
H71TCON		T-CON on Panel	T-CON Board on Panel
H21DSP	IC3400	IC Audio Amplifier with DSP	A-Board
H93FPGA	IC6400	CI CONTROLLER_FPGA	A-Board

* Does not detect a wrong connected BT Antenna.

If the CCU ports have been checked and found to be incorrect or not located then " - - " will appear in place of "O.K.".

Power LED blinking timing chart

1. Subject
   Information of LED Flashing timing chart.

2. Contents
   When abnormality has occurred the unit, the protection circuit operates and reset to the stand by mode. At this time, the defective block can be identified by number of blinking of the Power LED on the front panel of the unit.

Blinking times	Blinking timing	Contents	Check point
1	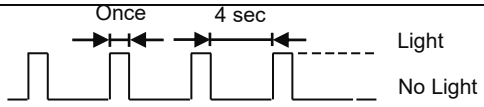	BL_SOS	LCD PANEL P BOARD
5		PMIC_SOS (Power Management IC SOS)	A BOARD
7		SUB3.3V_SOS Over-voltage_SOS	A BOARD P BOARD
9		SOUND_SOS	A BOARD SPEAKERS
13		EMERGENCY SOS	A BOARD

LCD Panel Test Mode

Purpose:

To find the possible failure point where in LCD Panel or Printed Circuit Board when the abnormal picture is displayed.

How to Enter:

While pressing [VOLUME (-)] button of the main unit, press [YELLOW] button of the remote control three times.

How to Exit:

Switch off the power with the [POWER] button on the main unit or the [POWER] button on the remote control.

How to confirm:

If the abnormal picture is displayed, go into LCD Panel test mode to display the several test patterns.
And then, judge by the following method.
Still abnormal picture is displayed: The cause must be in LCD Panel.
Normal picture is displayed: The cause must be in A board.

Remarks:

The test pattern is created by the circuit in LCD Panel.
In LCD Panel test mode, this test pattern is displayed unaffected by signal processing for RF or input signal.
If the normal picture is displayed, LCD Panel must be okay and the cause of failure must be in A board.

Wiring Diagram

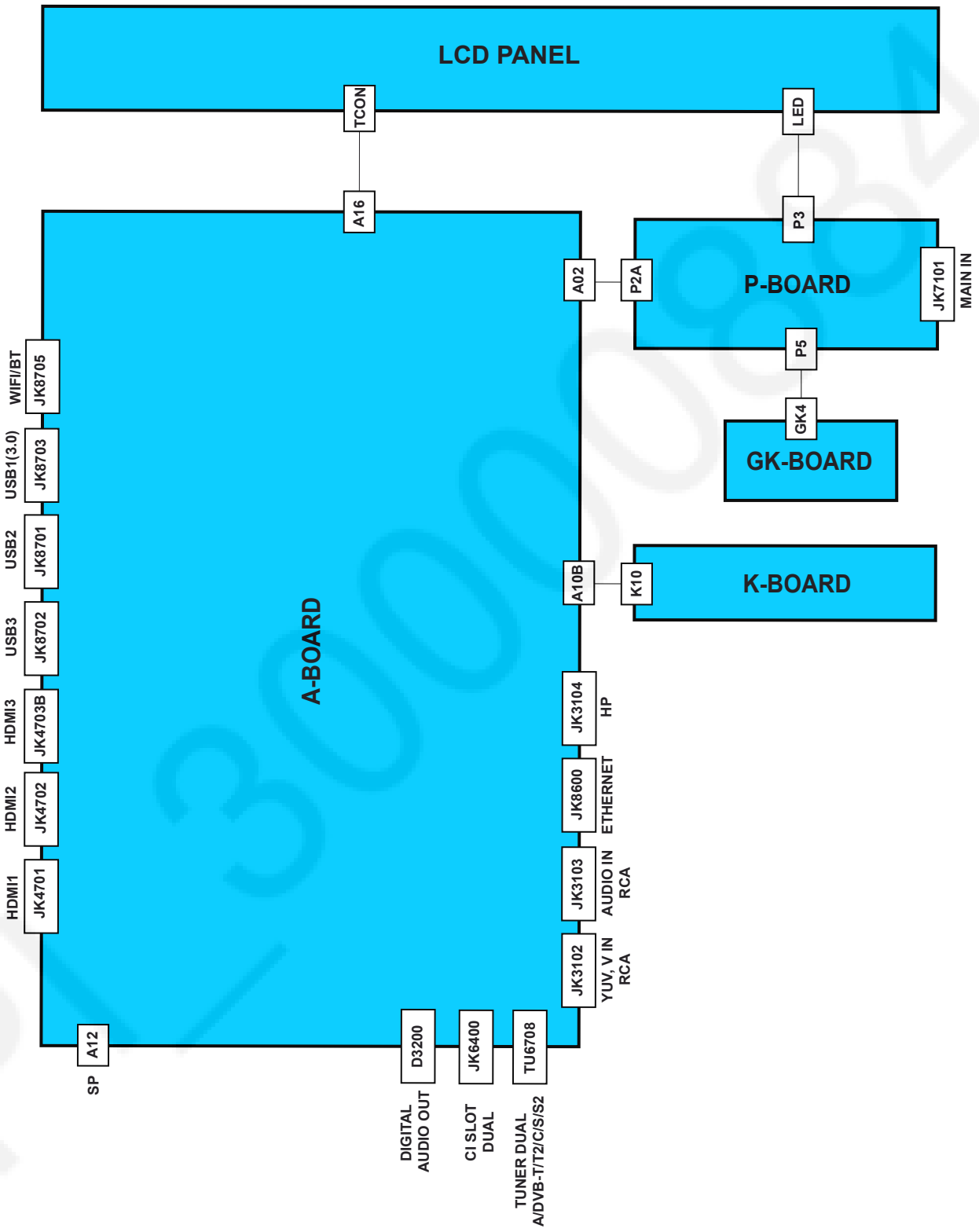

Block Diagram (1/2)

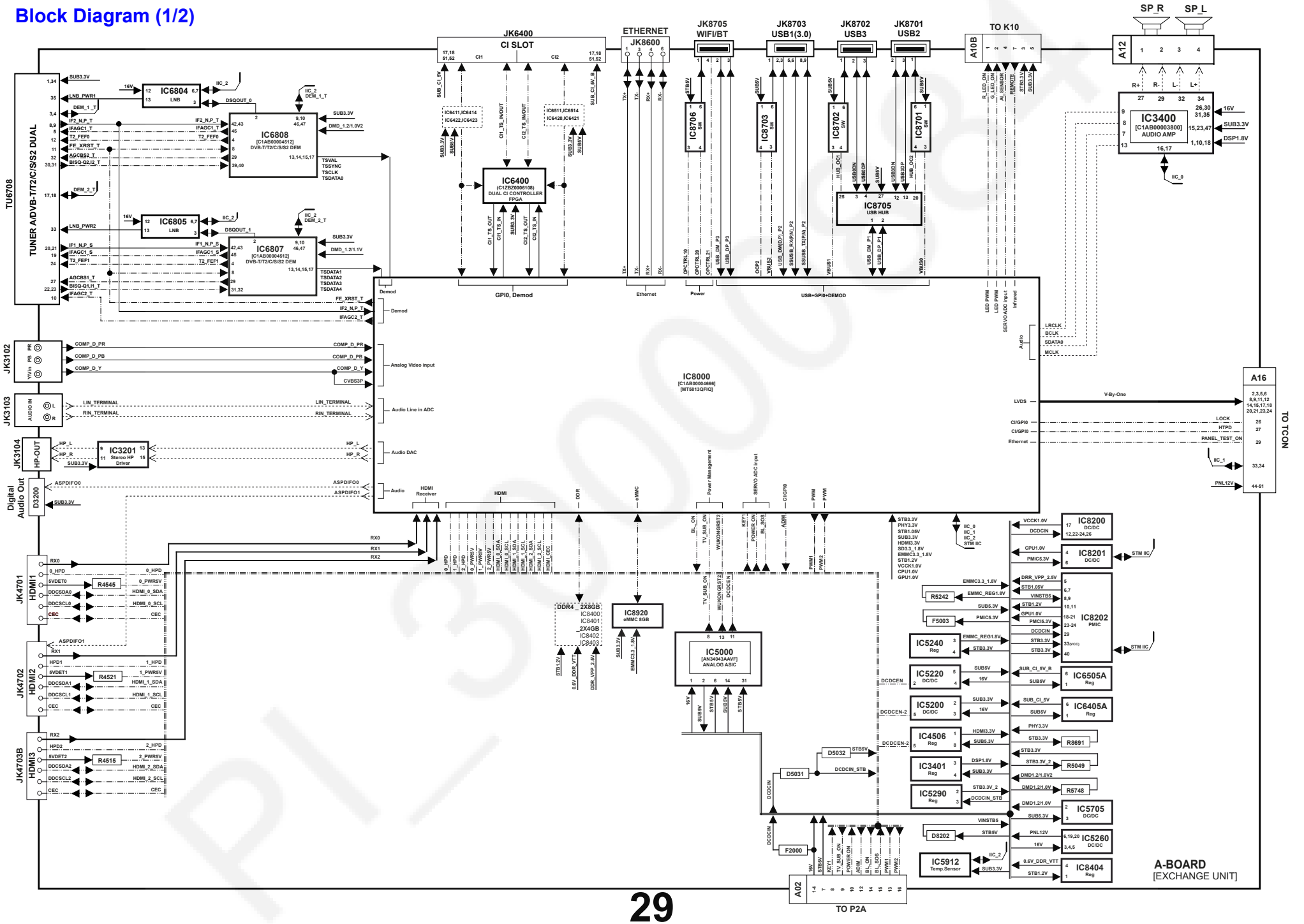

Block Diagram (2/2)

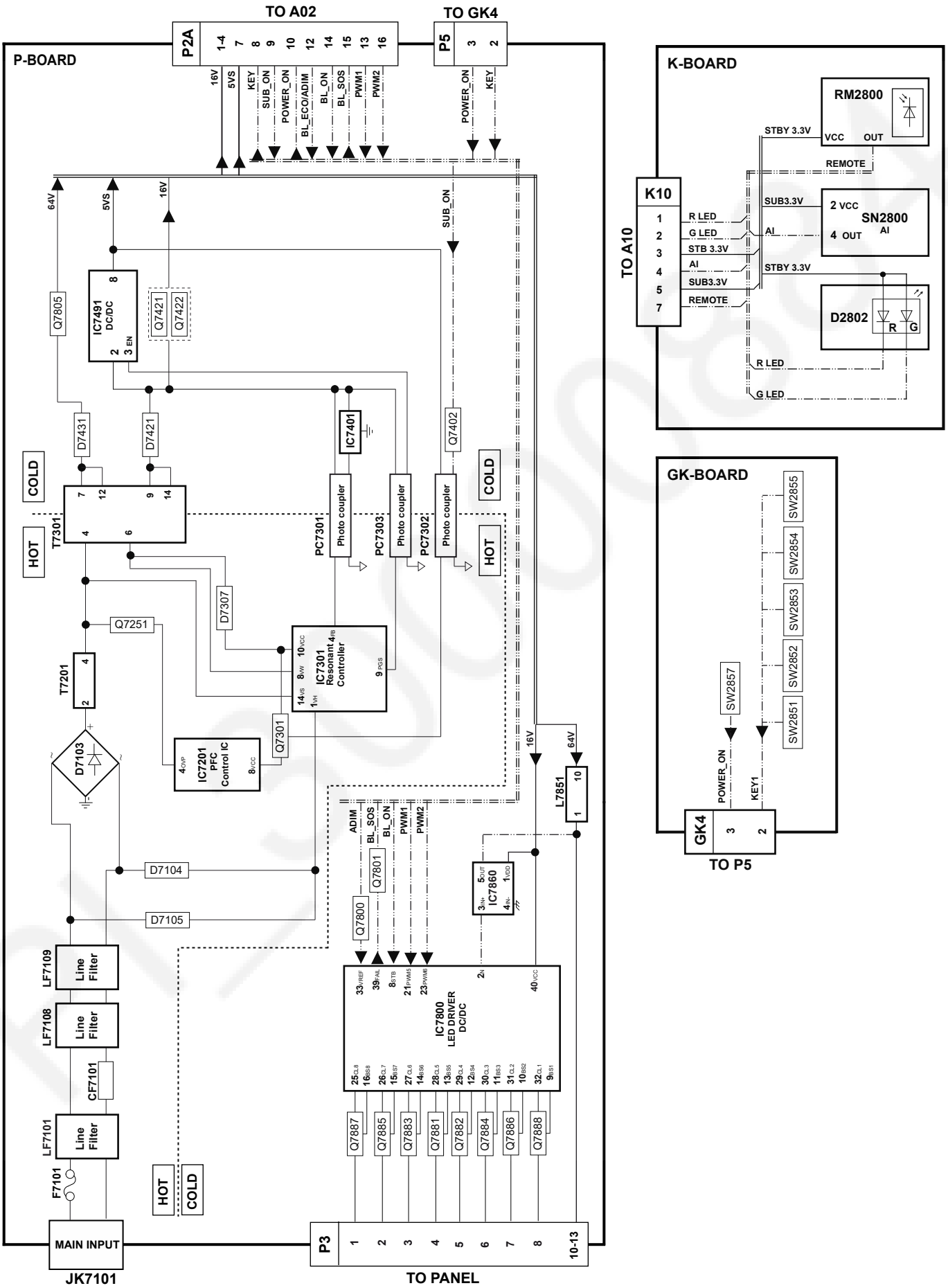

Parts Location 1

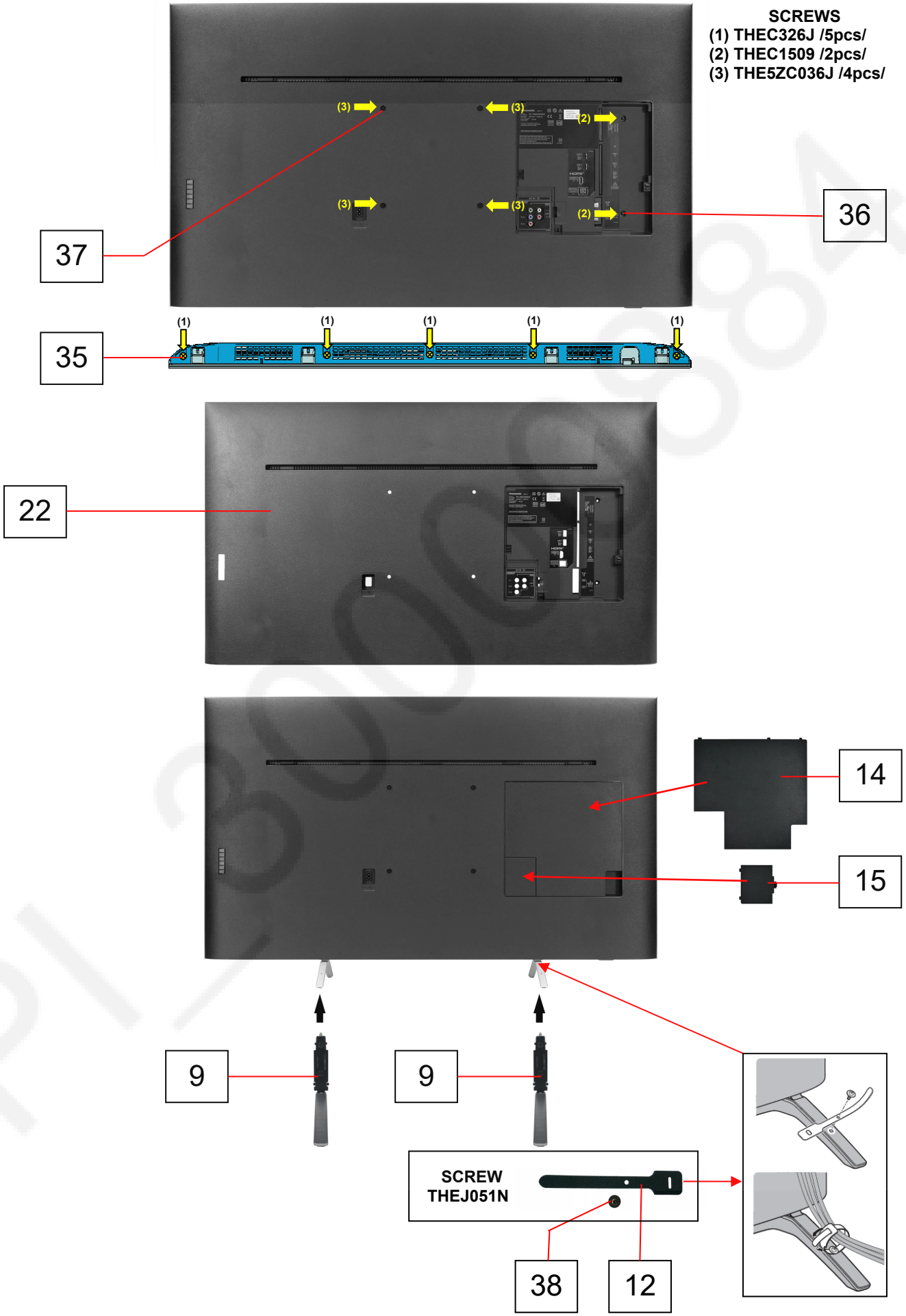

Parts Location 2

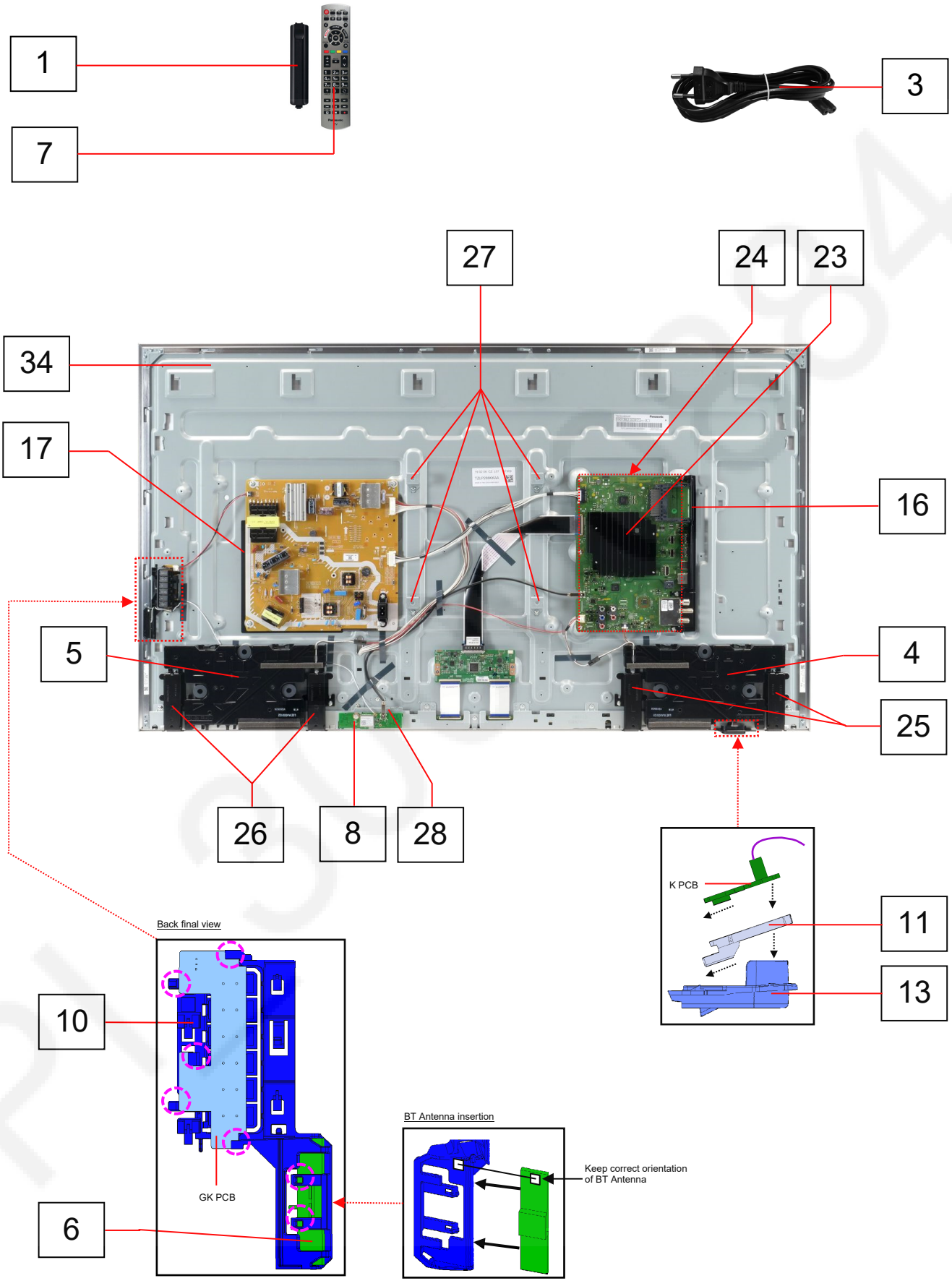

Location of Lead Wiring

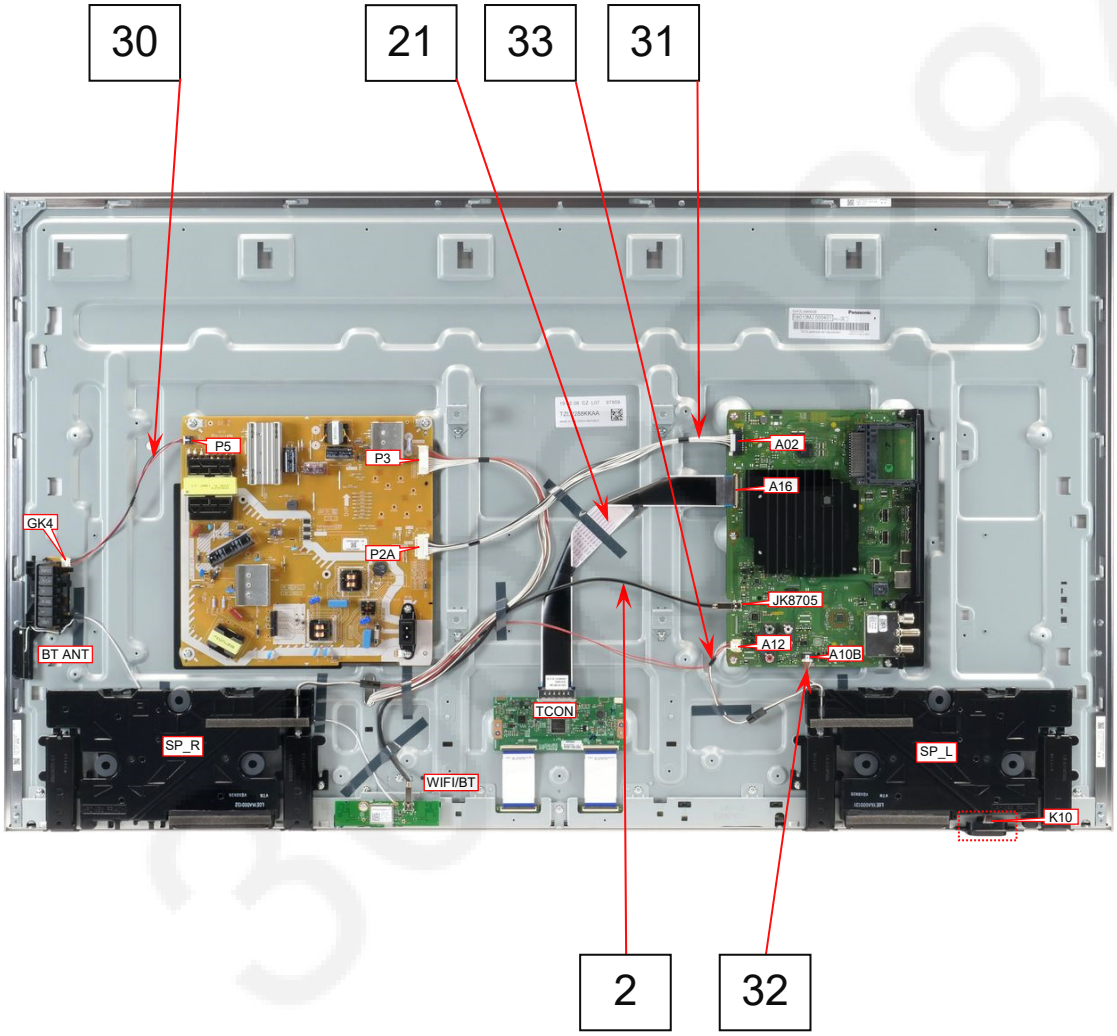

Location of Heat Rubber and Gasket

A PCB

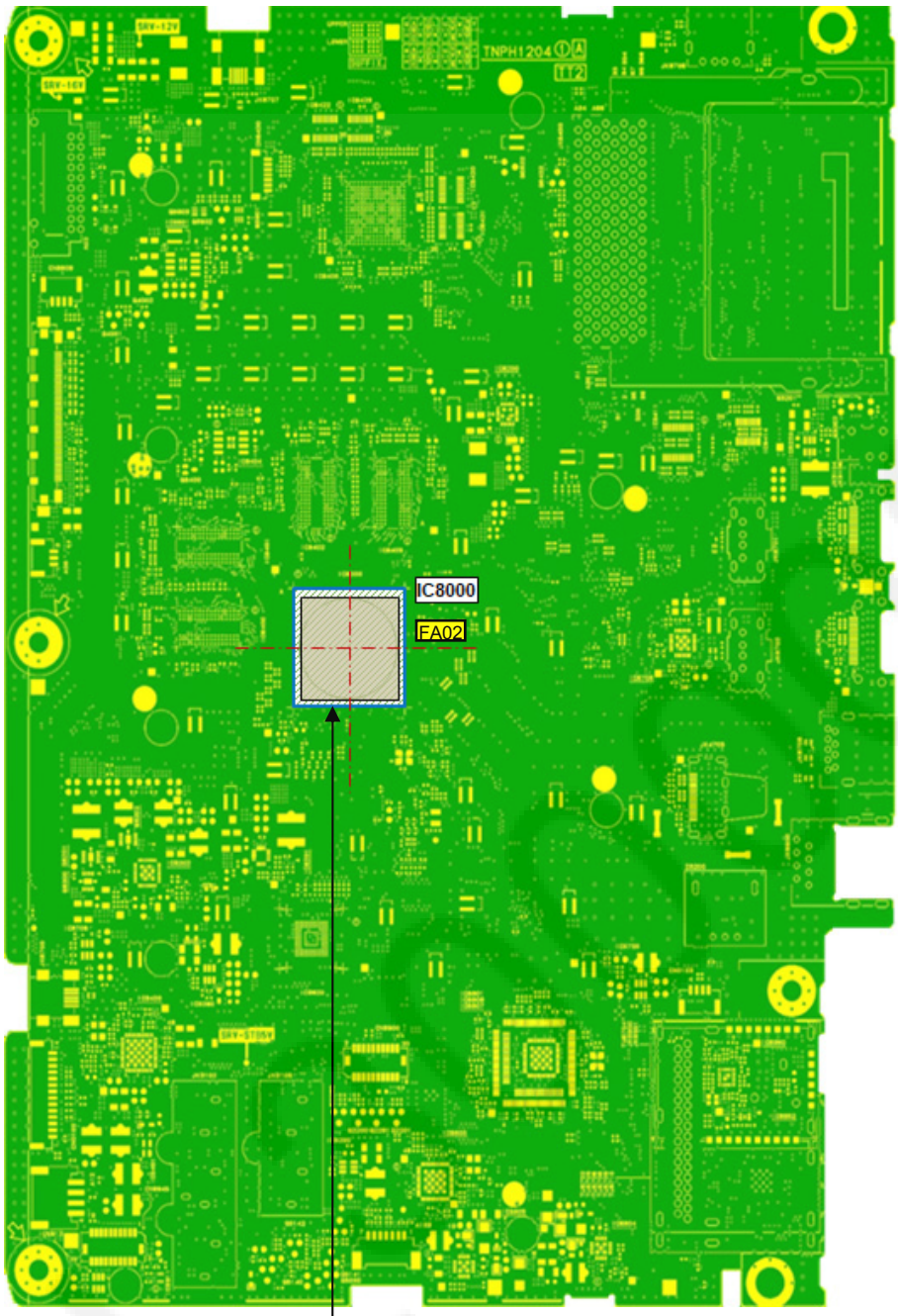

DETAIL

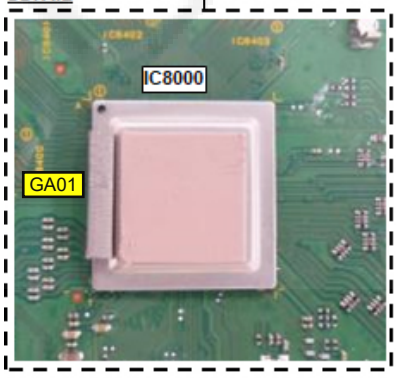

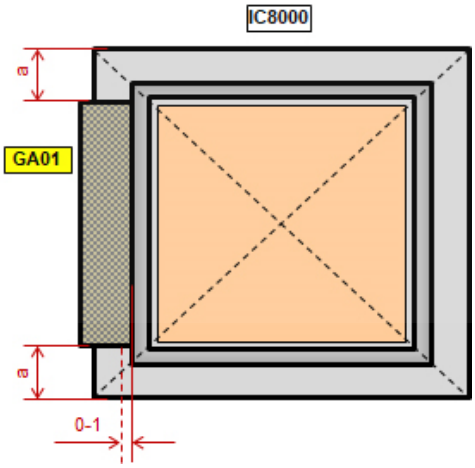

Location of Heat Rubbers

HEATSINK A BTM

Bottom View

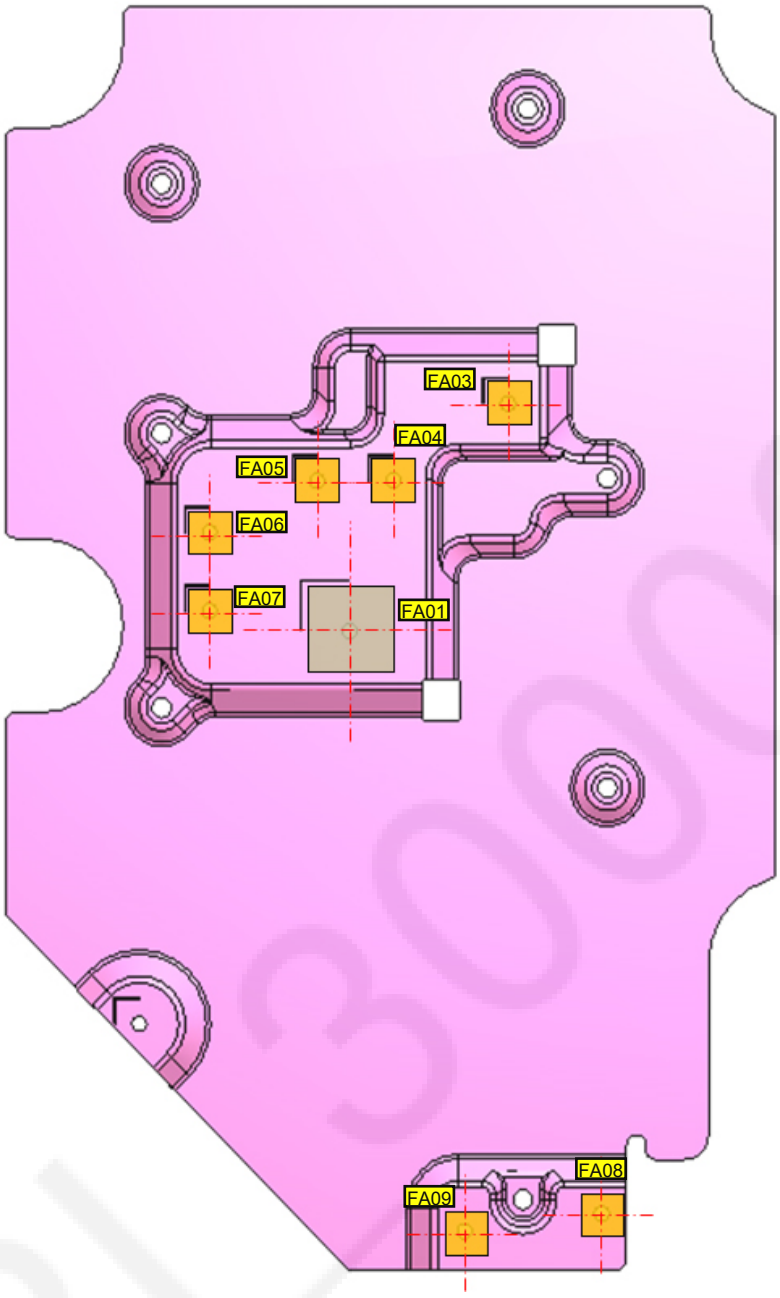

PL3000884

Location of Gasket

HEATSINK A BTM

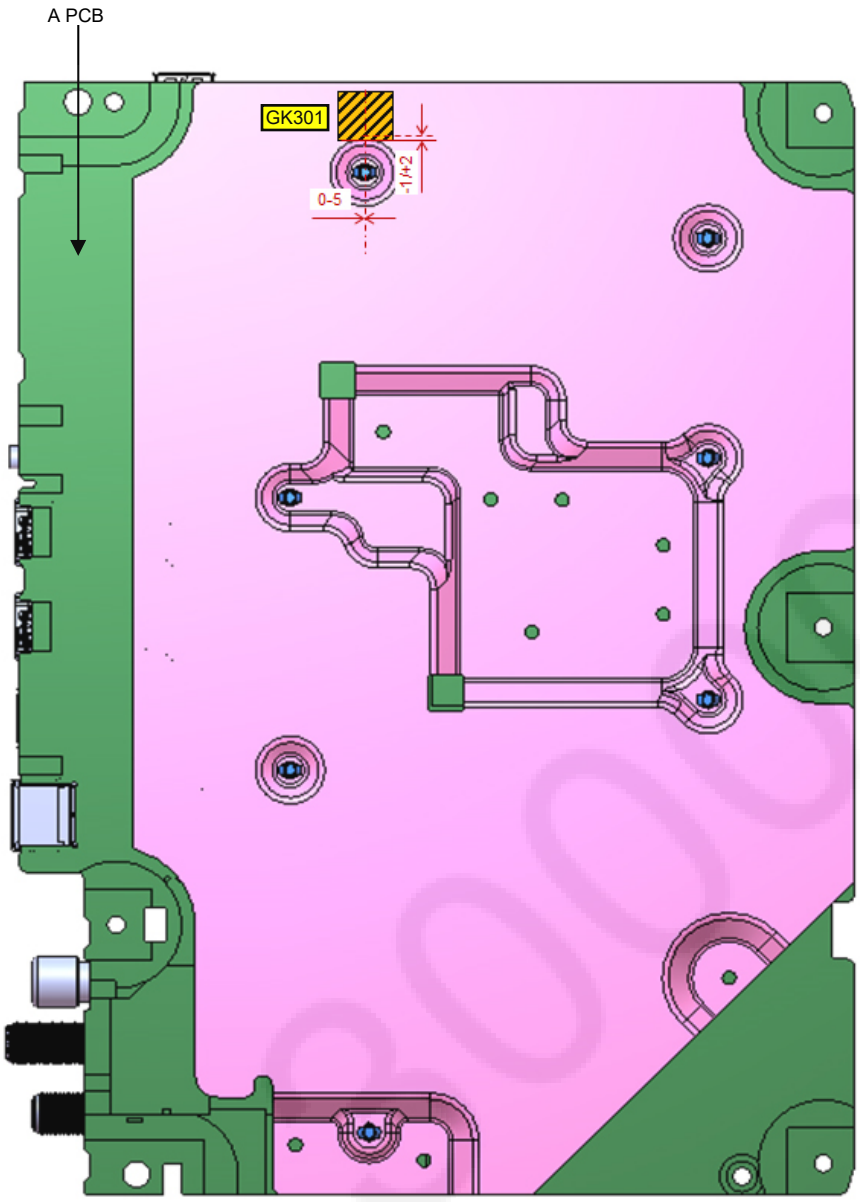

Packing Structure

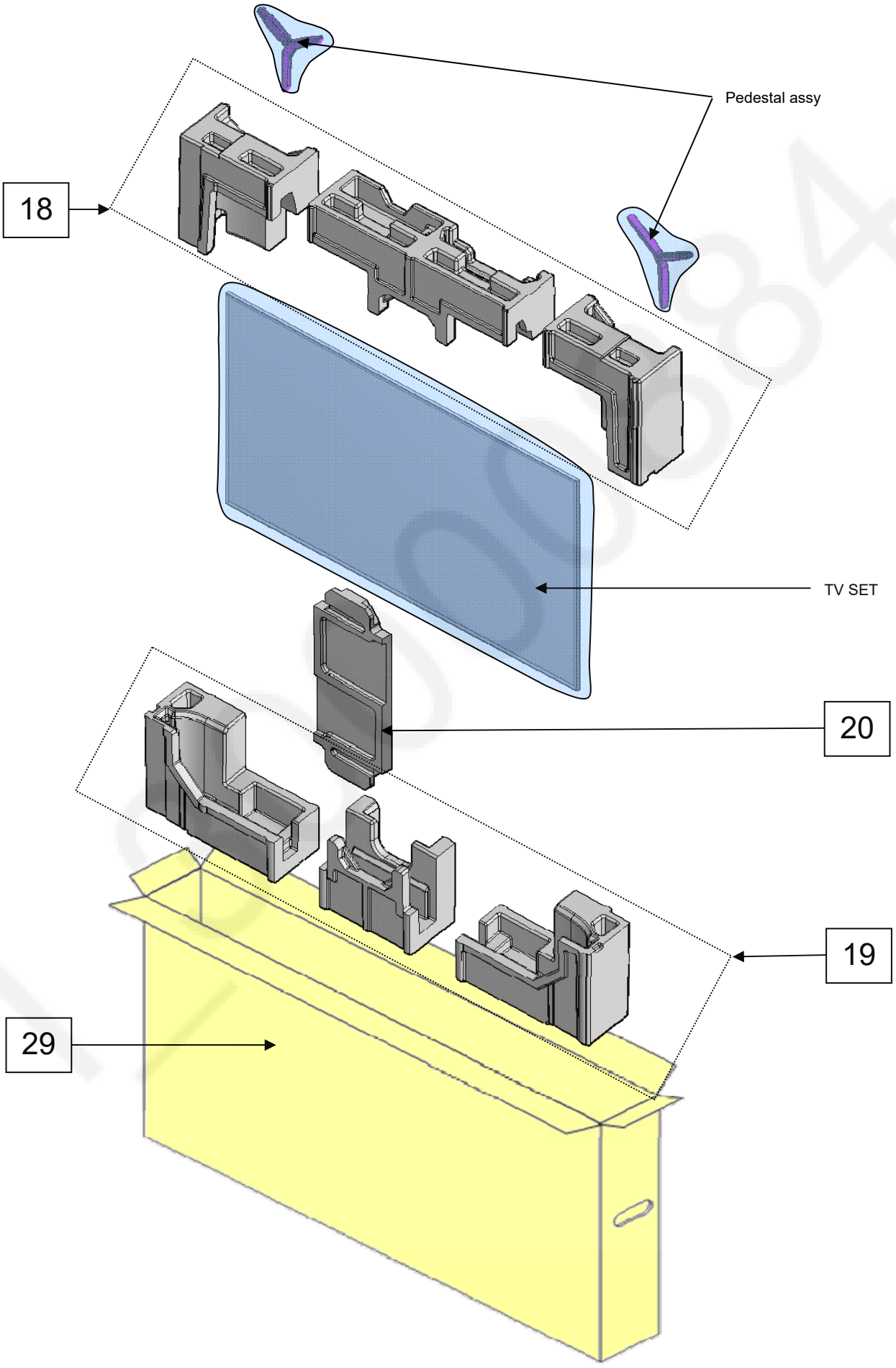

Replacement Parts List Note

Note: All parts except parts mentioned [PAVCCZ] in the Remarks column are supplied by AVC-CSPC.
Parts mentioned [PAVCCZ] are supplied by PAVCCZ.

Notice: Be sure to make your orders of replacement parts according to this list.

RTL (Retention Time Limited)

Note: The marking (RTL) indicates that the Retention Time is Limited for this item.
After the discontinuation of this assembly in production, the item will continue to be available for a specific period of time. The retention period of availability is dependant on the type of assembly, and in accordance with the laws governing part and product retention.
After the end of this period, the assembly will no longer be available.

Abbreviation of part name and description

1. Resistor

Example:

ERD25TJ104 C 100KOHM J 1/4W

Type Allowance

Type	Allowance
C : Carbon	D :±0.5%
F : Fuse	F :±1%
M : Metal Oxide	G :±2%
Metal Film	J :±5%
S : Solid	K :±10%
W : Wire Wound	M :±20%

2. Capacitor

Example:

ECKF1H103ZF C 0.01UF Z 50V

Type Allowance

Type	Allowance
C : Ceramic	C :±0.25pF
E : Electrolytic	D :±0.5pF
P : Polyester	F :±1pF
Polypropylene	G :±3pF
T : Tantalum	J :±5pF
	K :±10pF
	L :±15pF
	M :±20pF
	P :+100%, -0%
	Z :+80%, -20%

PI_30000884

Model No. : TX-49GXW904 Parts List

Change	Safety	Ref. No.	Part No.	Part Name & Description	Q'ty	Remarks
		1	BAT-C-1178	BATTERY COVER OF RC	1	PAVCCZ
		2	K1HY05YY0336	USB CABLE	1	PAVCCZ
	⚠	3	K2CQ2YY00158	AC CORD	1	PAVCCZ
		4	L0EYAA000131	SPEAKER L	1	PAVCCZ
		5	L0EYAA000132	SPEAKER R	1	PAVCCZ
	⚠	6	N1ZYYY000349	BT ANT	1	PAVCCZ
		7	N2QAYB001178	REMOTE CONTROL	1	PAVCCZ
	⚠	8	N5HBZ0000123	WIRELESS MODULE	1	PAVCCZ
		9	TBL5ZX12891	PEDESTAL ASSY	2	PAVCCZ
	⚠	10	TBX5ZA05302	KEY BUTTON BRACKET	1	PAVCCZ
		11	TKK5ZC50621	LED PANEL	1	PAVCCZ
		12	TKLA6801	MAGIC BAND	2	PAVCCZ
		13	TKP5ZA71301A	LED PANEL CASE	1	PAVCCZ
		14	TKP5ZA71701	TERMINAL COVER	1	PAVCCZ
		15	TKP5ZA72501	REAR COVER	1	PAVCCZ
		16	TKP5ZA75001	SIDE AV BRACKET	1	PAVCCZ
	⚠	17	TMK5ZX334	P-PCB BARRIER	1	PAVCCZ
		18	TPD0E14881	CUSHION TOP	1	PAVCCZ
		19	TPD0E24821	CUSHION BOTTOM	1	PAVCCZ
		20	TPD0E50391	CUSHION FRONT	1	PAVCCZ
		21	TSCKF1090003	LVDS FFC (51PIN)	1	PAVCCZ
	⚠	22	TTU0E2316	BACK COVER COMPLETE	1	PAVCCZ
		23	TUC5ZJ52742	HEATSINK A TOP FIN	1	PAVCCZ
		24	TUC5ZJ52801	HEATSINK A BTM	1	PAVCCZ
		25	TUX5ZA1211	BTM METAL L	2	PAVCCZ
		26	TUX5ZA1221	BTM METAL R	2	PAVCCZ
		27	TUX5ZX1821	VESA METAL	4	PAVCCZ
		28	TUX5ZX2011	WIFI-BT MD BRACKET	1	PAVCCZ
		29	TXFPC01WRWE	CARTON ASSY	1	PAVCCZ
		30	TXJ/P5TAVJ	P5-GK4 WIRE	1	PAVCCZ
		31	TXJA02VBWE	A02-P2 WIRE	1	PAVCCZ
		32	TXJA10VBWE	A10-K10 WIRE	1	PAVCCZ
		33	TXJA12VBWE	A12-SP WIRE	1	PAVCCZ
	⚠	34	TZLP288KKAA	LCD PANEL ASSY WITH CABINET	1	PAVCCZ
		35	THEC326J	SCREW M3X6X2	5	PAVCCZ
		36	THEC1509	SCREW M3X5 BLACK	2	PAVCCZ
		37	THE5ZC036J	SCREW M6X10 BLACK	4	PAVCCZ
		38	THEJ051N	SCREW M4X5.5	2	PAVCCZ
			R6DB/2PC	BATTERY	2	PAVCCZ
			THEJ036J	SCREW M3X4.8 SILVER	25	PAVCCZ
			TPE0E4131	SET BAG	1	PAVCCZ
			TQB0E2863	PRODUCT INFORMATION SHEET	1	PAVCCZ
	⚠		TQB0E2863A	INSTRUCTION BOOK (GERMAN)	1	PAVCCZ
	⚠		TQB0E2863B	INSTRUCTION BOOK (DUTCH)	1	PAVCCZ
	⚠		TQB0E2863C	INSTRUCTION BOOK (ITALIAN)	1	PAVCCZ
	⚠		TQB0E2863D	INSTRUCTION BOOK (FRENCH)	1	PAVCCZ
	⚠		TQB0E2863L	INSTRUCTION BOOK (RUSSIAN)	1	PAVCCZ
	⚠		TQB0E2863U	INSTRUCTION BOOK (ENGLISH)	1	PAVCCZ
			TQF0EA0038	ENERGY LABEL	1	PAVCCZ
			TUC4VJ50031	HEATSINK	2	PAVCCZ
			TUC5ZJ50932	HEATSINK	1	PAVCCZ
			XYN3+C6FJ	SCREW M3X6	3	PAVCCZ
			XYN3+C8FJ	SCREW M3X8	2	PAVCCZ
		CA01	TMME474	SPACER A-PCB	1	PAVCCZ
		CA02	TMME474	SPACER A-PCB	1	PAVCCZ
		CA03	TMME474	SPACER A-PCB	1	PAVCCZ
		CA04	TMME474	SPACER A-PCB	1	PAVCCZ
		CA05	TMME474	SPACER A-PCB	1	PAVCCZ
		CA06	TMME474	SPACER A-PCB	1	PAVCCZ
		CA07	TMME474	SPACER A-PCB	1	PAVCCZ
		FA01	TMKK747	HEAT RUBBER (20X20XT2.5)	1	PAVCCZ
		FA02	TMKK746	HEAT RUBBER (15X15XT1.0)	1	PAVCCZ

Model No. : TX-49GXW904 Parts List

Change	Safety	Ref. No.	Part No.	Part Name & Description	Q'ty	Remarks
		FA03	TMKK737	HEAT RUBBER (10X10XT2.5)	1	PAVCCZ
		FA04	TMKK737	HEAT RUBBER (10X10XT2.5)	1	PAVCCZ
		FA05	TMKK737	HEAT RUBBER (10X10XT2.5)	1	PAVCCZ
		FA06	TMKK737	HEAT RUBBER (10X10XT2.5)	1	PAVCCZ
		FA07	TMKK737	HEAT RUBBER (10X10XT2.5)	1	PAVCCZ
		FA08	TMKK737	HEAT RUBBER (10X10XT2.5)	1	PAVCCZ
		FA09	TMKK737	HEAT RUBBER (10X10XT2.5)	1	PAVCCZ
		GA01	TEWC092	GASKET(3X15XT2)	1	PAVCCZ
		GK301	TEWB897	GASKET(10X10XT8)	1	PAVCCZ

PL3000084

Model No. : TX-49GXW904 Parts List

Change	Safety	Ref. No.	Part No.	Part Name & Description	Q'ty	Remarks
	⚠	PCB	A-49GXW904	CIRCUIT BOARD A	1	(RTL)PAVCCZ
	⚠	PCB	TXN/K1PZVJ	CIRCUIT BOARD K	1	(RTL)PAVCCZ
	⚠	PCB	TZRNP01VBWE	CIRCUIT BOARD P	1	(RTL)PAVCCZ
	⚠	PCB	TZRNP02REWE	CIRCUIT BOARD GK	1	(RTL)PAVCCZ
		A02	K1KY16BA0484	16P CONNECTOR	1	PAVCCZ
		A10B	K1KY07BA0483	7P CONNECTOR	1	PAVCCZ
		A12	K1KY04BA0579	4P CONNECTOR	1	PAVCCZ
		A16	K1MY51BA0526	51P CONNECTOR	1	PAVCCZ
		C2000	F1G1H102A830	C 1000PF, , 50V	1	PAVCCZ
		C2001	F1G1E103A144	C 0.01UF, , 25V	1	PAVCCZ
		C2002	F1G1E103A144	C 0.01UF, , 25V	1	PAVCCZ
		C2003	F1K1E106A167	C 10UF, , 25V	1	PAVCCZ
		C2004	F1G1H102A830	C 1000PF, , 50V	1	PAVCCZ
		C2005	F1G1H102A830	C 1000PF, , 50V	1	PAVCCZ
		C2006	F1G1C104A146	C 0.1UF, , 16V	1	PAVCCZ
		C2007	F1G1H102A830	C 1000PF, , 50V	1	PAVCCZ
		C2008	F1G1H102A830	C 1000PF, , 50V	1	PAVCCZ
		C2010	F1G1H220A834	C 22PF, , 50V	1	PAVCCZ
		C2021	F1G1H221A834	C 220PF, -, 50V	1	PAVCCZ
		C2022	F1G1H221A834	C 220PF, -, 50V	1	PAVCCZ
		C2041	F1G1C104A146	C 0.1UF, , 16V	1	PAVCCZ
		C2056	F1G1E103A144	C 0.01UF, , 25V	1	PAVCCZ
		C2253	F1G1A105A107	C 1UF, K, 10V	1	PAVCCZ
		C2257	F1G1E103A144	C 0.01UF, , 25V	1	PAVCCZ
		C2258	F1G1E103A144	C 0.01UF, , 25V	1	PAVCCZ
		C2259	F1G1H101A834	C 100PF, , 50V	1	PAVCCZ
		C2801	F1H1H103B047	C 10NF, , 50V	1	PAVCCZ
		C2804	F1H1C104A178	C 0.1UF, -, 16V	1	PAVCCZ
		C2807	F1J1A106A087	C 10UF, , 10V	1	PAVCCZ
		C2808	F1H1C104A178	C 0.1UF, -, 16V	1	PAVCCZ
		C2851	F1J1H104A902	C 100NF, , 50V	1	PAVCCZ
		C2852	F1J1H104A902	C 100NF, , 50V	1	PAVCCZ
		C3109	F1G1H101A834	C 100PF, , 50V	1	PAVCCZ
		C3110	F1G1H101A834	C 100PF, , 50V	1	PAVCCZ
		C3111	F1G1H101A834	C 100PF, , 50V	1	PAVCCZ
		C3112	F1G1H152A946	C 1500PF, K, 50V	1	PAVCCZ
		C3113	F1G1C103A146	C 0.01UF, -, 16V	1	PAVCCZ
		C3114	F1G1C103A146	C 0.01UF, -, 16V	1	PAVCCZ
		C3115	F1G1C103A146	C 0.01UF, -, 16V	1	PAVCCZ
		C3116	F1G1C103A146	C 0.01UF, -, 16V	1	PAVCCZ
		C3117	F1G1A105A107	C 1UF, K, 10V	1	PAVCCZ
		C3124	F1G1A105A107	C 1UF, K, 10V	1	PAVCCZ
		C3125	F1G1A105A107	C 1UF, K, 10V	1	PAVCCZ
		C3127	F1G1A473A069	C 47NF, , 10V	1	PAVCCZ
		C3128	F1G1H471A834	C 470PF, , 50V	1	PAVCCZ
		C3129	F1G1H471A834	C 470PF, , 50V	1	PAVCCZ
		C3134	F1G1C104A146	C 0.1UF, , 16V	1	PAVCCZ
		C3135	F1G1C104A146	C 0.1UF, , 16V	1	PAVCCZ
		C3161	F1G1H101A834	C 100PF, , 50V	1	PAVCCZ
		C3162	F1G1H101A834	C 100PF, , 50V	1	PAVCCZ
		C3163	F1G1H101A834	C 100PF, , 50V	1	PAVCCZ
		C3164	F1G1H101A834	C 100PF, , 50V	1	PAVCCZ
		C3166	F1G1H470A948	C 47PF, J, 50V	1	PAVCCZ
		C3167	F1G1H470A948	C 47PF, J, 50V	1	PAVCCZ
		C3168	F1G1H470A948	C 47PF, J, 50V	1	PAVCCZ
		C3200	F1G1C104A146	C 0.1UF, , 16V	1	PAVCCZ
		C3201	F1H1A225A102	C 2.2UF, K, 10V	1	PAVCCZ
		C3202	F1H1A225A102	C 2.2UF, K, 10V	1	PAVCCZ
		C3203	F1J1C106A224	C 10UF, , 16V	1	PAVCCZ
		C3205	F1H1C105A167	C 1UF, , 16V	1	PAVCCZ

Model No. : TX-49GXW904 Parts List

Change	Safety	Ref. No.	Part No.	Part Name & Description	Q'ty	Remarks
		C3206	F1H1C105A167	C 1UF, , 16V	1	PAVCCZ
		C3209	F1G1H222A946	C 2200PF, K, 50V	1	PAVCCZ
		C3210	F1G1H222A946	C 2200PF, K, 50V	1	PAVCCZ
		C3400	F1G1C104A146	C 0.1UF, , 16V	1	PAVCCZ
		C3401	F1G1C104A146	C 0.1UF, , 16V	1	PAVCCZ
		C3402	F1G1C104A146	C 0.1UF, , 16V	1	PAVCCZ
		C3403	F1G1C104A146	C 0.1UF, , 16V	1	PAVCCZ
		C3404	F1G1C104A146	C 0.1UF, , 16V	1	PAVCCZ
		C3405	F1H1C105A167	C 1UF, , 16V	1	PAVCCZ
		C3407	F1J1E105A287	C 1000NF, , 25V	1	PAVCCZ
		C3417	F1J1E105A287	C 1000NF, , 25V	1	PAVCCZ
		C3426	F1J1E105A287	C 1000NF, , 25V	1	PAVCCZ
		C3432	F1J1E105A287	C 1000NF, , 25V	1	PAVCCZ
		C3437	F1G1A105A107	C 1UF, K, 10V	1	PAVCCZ
		C3438	F1G1A105A107	C 1UF, K, 10V	1	PAVCCZ
		C3443	F1G1C103A146	C 0.01UF, -, 16V	1	PAVCCZ
		C3800	F1K1E106A167	C 10UF, , 25V	1	PAVCCZ
		C3801	F1K1E106A167	C 10UF, , 25V	1	PAVCCZ
		C3802	F1K1E106A167	C 10UF, , 25V	1	PAVCCZ
		C3812	F1J1E224A272	C 220NF, , 25V	1	PAVCCZ
		C3813	F1H1E104A161	C 0.1UF, , 25V	1	PAVCCZ
		C3814	F1H1E104A161	C 0.1UF, , 25V	1	PAVCCZ
		C3815	F1J1E224A272	C 220NF, , 25V	1	PAVCCZ
		C3816	F1H1E104A161	C 0.1UF, , 25V	1	PAVCCZ
		C3817	F1H1E104A161	C 0.1UF, , 25V	1	PAVCCZ
		C4050	F1G1C104A146	C 0.1UF, , 16V	1	PAVCCZ
		C4051	F1G1C104A146	C 0.1UF, , 16V	1	PAVCCZ
		C4052	F1G1C104A146	C 0.1UF, , 16V	1	PAVCCZ
		C4053	F1G1C104A146	C 0.1UF, , 16V	1	PAVCCZ
		C4054	F1G1C104A146	C 0.1UF, , 16V	1	PAVCCZ
		C4055	F1G1C104A146	C 0.1UF, , 16V	1	PAVCCZ
		C4056	F1G1C104A146	C 0.1UF, , 16V	1	PAVCCZ
		C4057	F1G1C104A146	C 0.1UF, , 16V	1	PAVCCZ
		C4058	F1G1C104A146	C 0.1UF, , 16V	1	PAVCCZ
		C4059	F1G1C104A146	C 0.1UF, , 16V	1	PAVCCZ
		C4060	F1G1C104A146	C 0.1UF, , 16V	1	PAVCCZ
		C4061	F1G1C104A146	C 0.1UF, , 16V	1	PAVCCZ
		C4062	F1G1C104A146	C 0.1UF, , 16V	1	PAVCCZ
		C4063	F1G1C104A146	C 0.1UF, , 16V	1	PAVCCZ
		C4064	F1G1C104A146	C 0.1UF, , 16V	1	PAVCCZ
		C4065	F1G1C104A146	C 0.1UF, , 16V	1	PAVCCZ
		C4069	F1G1H101A834	C 100PF, , 50V	1	PAVCCZ
		C4070	F1G1E103A144	C 0.01UF, , 25V	1	PAVCCZ
		C4116	F1G1E103A144	C 0.01UF, , 25V	1	PAVCCZ
		C4117	F1G1E103A144	C 0.01UF, , 25V	1	PAVCCZ
		C4118	F1G1E103A144	C 0.01UF, , 25V	1	PAVCCZ
		C4500	F1G1A105A107	C 1UF, K, 10V	1	PAVCCZ
		C4578	F1G1A105A107	C 1UF, K, 10V	1	PAVCCZ
		C4579	F1G1A105A107	C 1UF, K, 10V	1	PAVCCZ
		C4599	F1G1H101A834	C 100PF, , 50V	1	PAVCCZ
		C5020	F1G1A105A107	C 1UF, K, 10V	1	PAVCCZ
		C5022	F1G1A105A107	C 1UF, K, 10V	1	PAVCCZ
		C5024	F1G1A105A107	C 1UF, K, 10V	1	PAVCCZ
		C5025	F1J1E105A287	C 1000NF, , 25V	1	PAVCCZ
		C5026	F1G1A105A107	C 1UF, K, 10V	1	PAVCCZ
		C5029	F1H1A225A102	C 2.2UF, K, 10V	1	PAVCCZ
		C5030	F1G1A105A107	C 1UF, K, 10V	1	PAVCCZ
		C5031	F1G1A105A107	C 1UF, K, 10V	1	PAVCCZ
		C5032	F1H1E105A153	C 1000NF, , 25V	1	PAVCCZ
		C5035	F1G1H102A830	C 1000PF, , 50V	1	PAVCCZ
		C5105	F1G1E103A144	C 0.01UF, , 25V	1	PAVCCZ
		C5140	F1G1E103A144	C 0.01UF, , 25V	1	PAVCCZ

Change	Safety	Ref. No.	Part No.	Part Name & Description	Q'ty	Remarks
		C5144	F1H1E105A153	C 1000NF, , 25V	1	PAVCCZ
		C5201	F1K1E106A167	C 10UF, , 25V	1	PAVCCZ
		C5202	F1K1E106A167	C 10UF, , 25V	1	PAVCCZ
		C5204	F1J0J226A091	C 22UF, M, 6.3V	1	PAVCCZ
		C5205	F1J0J226A091	C 22UF, M, 6.3V	1	PAVCCZ
		C5210	F1G1C104A146	C 0.1UF, , 16V	1	PAVCCZ
		C5214	F1G1E103A144	C 0.01UF, , 25V	1	PAVCCZ
		C5220	F1K1E106A167	C 10UF, , 25V	1	PAVCCZ
		C5221	F1K1E106A167	C 10UF, , 25V	1	PAVCCZ
		C5222	F1H1E104A161	C 0.1UF, , 25V	1	PAVCCZ
		C5223	F1J1C106A224	C 10UF, , 16V	1	PAVCCZ
		C5224	F1J1C106A224	C 10UF, , 16V	1	PAVCCZ
		C5225	F1J1C106A224	C 10UF, , 16V	1	PAVCCZ
		C5226	F1J1C106A224	C 10UF, , 16V	1	PAVCCZ
		C5228	F1G1C104A146	C 0.1UF, , 16V	1	PAVCCZ
		C5229	F1G1H101A834	C 100PF, , 50V	1	PAVCCZ
		C5245	F1G1A105A107	C 1UF, K, 10V	1	PAVCCZ
		C5246	F1G1A105A107	C 1UF, K, 10V	1	PAVCCZ
		C5260	F1K1E106A167	C 10UF, , 25V	1	PAVCCZ
		C5261	F1K1E106A167	C 10UF, , 25V	1	PAVCCZ
		C5262	F1H1E104A161	C 0.1UF, , 25V	1	PAVCCZ
		C5263	F1G1A105A107	C 1UF, K, 10V	1	PAVCCZ
		C5264	F1H1A225A102	C 2.2UF, K, 10V	1	PAVCCZ
		C5266	F1G1C104A146	C 0.1UF, , 16V	1	PAVCCZ
		C5268	F1G1H221A834	C 220PF, -, 50V	1	PAVCCZ
		C5270	F1K1E106A167	C 10UF, , 25V	1	PAVCCZ
		C5271	F1K1E106A167	C 10UF, , 25V	1	PAVCCZ
		C5272	F1K1E106A167	C 10UF, , 25V	1	PAVCCZ
		C5273	F1K1E106A167	C 10UF, , 25V	1	PAVCCZ
		C5292	F1J0J226A091	C 22UF, M, 6.3V	1	PAVCCZ
		C5293	F1J0J226A091	C 22UF, M, 6.3V	1	PAVCCZ
		C5294	F1K1E106A167	C 10UF, , 25V	1	PAVCCZ
		C5295	F1K1E106A167	C 10UF, , 25V	1	PAVCCZ
		C5298	F1G1C104A146	C 0.1UF, , 16V	1	PAVCCZ
		C5722	F1J0J226A091	C 22UF, M, 6.3V	1	PAVCCZ
		C5723	F1J0J226A091	C 22UF, M, 6.3V	1	PAVCCZ
		C5724	F1G1C104A146	C 0.1UF, , 16V	1	PAVCCZ
		C5734	F1J1C106A224	C 10UF, , 16V	1	PAVCCZ
		C5736	F1G1C104A146	C 0.1UF, , 16V	1	PAVCCZ
		C5737	F1J1C106A224	C 10UF, , 16V	1	PAVCCZ
		C5922	F1G1C104A146	C 0.1UF, , 16V	1	PAVCCZ
		C6424	F1G1C104A146	C 0.1UF, , 16V	1	PAVCCZ
		C6427	F1G1C104A146	C 0.1UF, , 16V	1	PAVCCZ
		C6428	F1G1C104A146	C 0.1UF, , 16V	1	PAVCCZ
		C6429	F1G1C104A146	C 0.1UF, , 16V	1	PAVCCZ
		C6430	F1J1C106A224	C 10UF, , 16V	1	PAVCCZ
		C6431	F1G1H100A948	C 10PF, J, 50V	1	PAVCCZ
		C6433	F1G1C104A146	C 0.1UF, , 16V	1	PAVCCZ
		C6434	F1G1C104A146	C 0.1UF, , 16V	1	PAVCCZ
		C6436	F1G1C104A146	C 0.1UF, , 16V	1	PAVCCZ
		C6437	F1J0J226A091	C 22UF, M, 6.3V	1	PAVCCZ
		C6438	F1J0J226A091	C 22UF, M, 6.3V	1	PAVCCZ
		C6439	F1G1C104A146	C 0.1UF, , 16V	1	PAVCCZ
		C6440	F1G1C104A146	C 0.1UF, , 16V	1	PAVCCZ
		C6441	F1G1C104A146	C 0.1UF, , 16V	1	PAVCCZ
		C6442	F1G1C104A146	C 0.1UF, , 16V	1	PAVCCZ
		C6443	F1G1C104A146	C 0.1UF, , 16V	1	PAVCCZ
		C6444	F1G1C104A146	C 0.1UF, , 16V	1	PAVCCZ
		C6445	F1G1C104A146	C 0.1UF, , 16V	1	PAVCCZ
		C6446	F1G1C104A146	C 0.1UF, , 16V	1	PAVCCZ
		C6447	F1G1C104A146	C 0.1UF, , 16V	1	PAVCCZ
		C6448	F1G1C104A146	C 0.1UF, , 16V	1	PAVCCZ

Change	Safety	Ref. No.	Part No.	Part Name & Description	Q'ty	Remarks
		C6449	F1G1C104A146	C 0.1UF, , 16V	1	PAVCCZ
		C6450	F1G1C104A146	C 0.1UF, , 16V	1	PAVCCZ
		C6451	F1G1C104A146	C 0.1UF, , 16V	1	PAVCCZ
		C6452	F1G1C104A146	C 0.1UF, , 16V	1	PAVCCZ
		C6453	F1G1C104A146	C 0.1UF, , 16V	1	PAVCCZ
		C6454	F1G1C104A146	C 0.1UF, , 16V	1	PAVCCZ
		C6455	F1G1C104A146	C 0.1UF, , 16V	1	PAVCCZ
		C6456	F1G1C104A146	C 0.1UF, , 16V	1	PAVCCZ
		C6457	F1G1C104A146	C 0.1UF, , 16V	1	PAVCCZ
		C6458	F1G1C104A146	C 0.1UF, , 16V	1	PAVCCZ
		C6459	F1G1C104A146	C 0.1UF, , 16V	1	PAVCCZ
		C6460	F1G1C104A146	C 0.1UF, , 16V	1	PAVCCZ
		C6461	F1G1C104A146	C 0.1UF, , 16V	1	PAVCCZ
		C6462	F1G1C104A146	C 0.1UF, , 16V	1	PAVCCZ
		C6477	F1G1C104A146	C 0.1UF, , 16V	1	PAVCCZ
		C6478	F1G1C104A146	C 0.1UF, , 16V	1	PAVCCZ
		C6479	F1G1C104A146	C 0.1UF, , 16V	1	PAVCCZ
		C6480	F1G1C104A146	C 0.1UF, , 16V	1	PAVCCZ
		C6524	F1G1C104A146	C 0.1UF, , 16V	1	PAVCCZ
		C6527	F1G1C104A146	C 0.1UF, , 16V	1	PAVCCZ
		C6528	F1G1C104A146	C 0.1UF, , 16V	1	PAVCCZ
		C6529	F1G1C104A146	C 0.1UF, , 16V	1	PAVCCZ
		C6530	F1J1C106A224	C 10UF, , 16V	1	PAVCCZ
		C6531	F1G1H100A948	C 10PF, J, 50V	1	PAVCCZ
		C6533	F1G1C104A146	C 0.1UF, , 16V	1	PAVCCZ
		C6534	F1G1C104A146	C 0.1UF, , 16V	1	PAVCCZ
		C6536	F1G1C104A146	C 0.1UF, , 16V	1	PAVCCZ
		C6537	F1J0J226A091	C 22UF, M, 6.3V	1	PAVCCZ
		C6538	F1J0J226A091	C 22UF, M, 6.3V	1	PAVCCZ
		C6600	F1G1H220A834	C 22PF, , 50V	1	PAVCCZ
		C6601	F1G1H220A834	C 22PF, , 50V	1	PAVCCZ
		C6700	F1J1C106A224	C 10UF, , 16V	1	PAVCCZ
		C6701	F1G1C104A146	C 0.1UF, , 16V	1	PAVCCZ
		C6702	F1G1H102A948	C 1000PF, J, 50V	1	PAVCCZ
		C6703	F1J1C106A224	C 10UF, , 16V	1	PAVCCZ
		C6704	F1G1C104A146	C 0.1UF, , 16V	1	PAVCCZ
		C6705	F1J1C106A224	C 10UF, , 16V	1	PAVCCZ
		C6706	F1G1H102A948	C 1000PF, J, 50V	1	PAVCCZ
		C6707	F1G1C104A146	C 0.1UF, , 16V	1	PAVCCZ
		C6708	F1G1H220A834	C 22PF, , 50V	1	PAVCCZ
		C6709	F1G1H220A834	C 22PF, , 50V	1	PAVCCZ
		C6710	F1G1H220A834	C 22PF, , 50V	1	PAVCCZ
		C6711	F1G1H102A948	C 1000PF, J, 50V	1	PAVCCZ
		C6712	F1G1H220A834	C 22PF, , 50V	1	PAVCCZ
		C6713	F1G1H220A834	C 22PF, , 50V	1	PAVCCZ
		C6715	F1G1H101A834	C 100PF, , 50V	1	PAVCCZ
		C6717	F1G1H220A834	C 22PF, , 50V	1	PAVCCZ
		C6718	F1G1H220A834	C 22PF, , 50V	1	PAVCCZ
		C6719	F1G1C104A146	C 0.1UF, , 16V	1	PAVCCZ
		C6720	F1G1H220A834	C 22PF, , 50V	1	PAVCCZ
		C6721	F1G1H220A834	C 22PF, , 50V	1	PAVCCZ
		C6723	F1G1H220A834	C 22PF, , 50V	1	PAVCCZ
		C6724	F1G1H220A834	C 22PF, , 50V	1	PAVCCZ
		C6725	F1G1H220A834	C 22PF, , 50V	1	PAVCCZ
		C6731	F1G1H101A834	C 100PF, , 50V	1	PAVCCZ
		C6732	F1G1H101A834	C 100PF, , 50V	1	PAVCCZ
		C6737	F1G1H101A834	C 100PF, , 50V	1	PAVCCZ
		C6739	F1G1C104A146	C 0.1UF, , 16V	1	PAVCCZ
		C6742	F1G1H101A834	C 100PF, , 50V	1	PAVCCZ
		C6827	F1G1C104A146	C 0.1UF, , 16V	1	PAVCCZ
		C6829	F1G1C104A146	C 0.1UF, , 16V	1	PAVCCZ
		C6830	F1G1C104A146	C 0.1UF, , 16V	1	PAVCCZ

Model No. : TX-49GXW904 Parts List

Change	Safety	Ref. No.	Part No.	Part Name & Description	Q'ty	Remarks
		C6831	F1G1C104A146	C 0.1UF, , 16V	1	PAVCCZ
		C6859	F1G1C104A146	C 0.1UF, , 16V	1	PAVCCZ
		C6860	F1G1C104A146	C 0.1UF, , 16V	1	PAVCCZ
		C6861	F1G1C104A146	C 0.1UF, , 16V	1	PAVCCZ
		C6864	F1G1C104A146	C 0.1UF, , 16V	1	PAVCCZ
		C6865	F1G1C104A146	C 0.1UF, , 16V	1	PAVCCZ
		C6877	F1G1C104A146	C 0.1UF, , 16V	1	PAVCCZ
		C6879	F1G1C104A146	C 0.1UF, , 16V	1	PAVCCZ
		C6884	F1G1H222A946	C 2200PF, K, 50V	1	PAVCCZ
		C6886	F1J1C106A224	C 10UF, , 16V	1	PAVCCZ
		C6889	F1J1C106A224	C 10UF, , 16V	1	PAVCCZ
		C6891	F1J1C106A224	C 10UF, , 16V	1	PAVCCZ
		C6893	F1G1C104A146	C 0.1UF, , 16V	1	PAVCCZ
		C6894	F1G1C104A146	C 0.1UF, , 16V	1	PAVCCZ
		C6898	F1G1H5R0A947	C 5PF, , 50V	1	PAVCCZ
		C6899	F1G1H5R0A947	C 5PF, , 50V	1	PAVCCZ
		C6902	F1G1H102A830	C 1000PF, , 50V	1	PAVCCZ
		C6903	F1G1A224A069	C 0.22UF, K, 10V	1	PAVCCZ
		C6904	F1K1V106A010	C 10UF, , 35V	1	PAVCCZ
		C6905	F1H1E104A161	C 0.1UF, , 25V	1	PAVCCZ
		C6906	F1J1H105A918	C 1UF, K, 50V	1	PAVCCZ
		C6907	F1K1V106A010	C 10UF, , 35V	1	PAVCCZ
		C6908	F1H1E104A161	C 0.1UF, , 25V	1	PAVCCZ
		C6909	F1K1E106A167	C 10UF, , 25V	1	PAVCCZ
		C6910	F1G1A224A069	C 0.22UF, K, 10V	1	PAVCCZ
		C6911	F1K1V106A010	C 10UF, , 35V	1	PAVCCZ
		C6912	F1H1E104A161	C 0.1UF, , 25V	1	PAVCCZ
		C6913	F1J1H105A918	C 1UF, K, 50V	1	PAVCCZ
		C6914	F1K1V106A010	C 10UF, , 35V	1	PAVCCZ
		C6915	F1H1E104A161	C 0.1UF, , 25V	1	PAVCCZ
		C6916	F1K1E106A167	C 10UF, , 25V	1	PAVCCZ
		C6923	F1G1C104A146	C 0.1UF, , 16V	1	PAVCCZ
		C6924	F1G1C104A146	C 0.1UF, , 16V	1	PAVCCZ
		C6925	F1G1C104A146	C 0.1UF, , 16V	1	PAVCCZ
		C6926	F1G1C104A146	C 0.1UF, , 16V	1	PAVCCZ
		C6927	F1G1C104A146	C 0.1UF, , 16V	1	PAVCCZ
		C6928	F1G1A105A107	C 1UF, K, 10V	1	PAVCCZ
		C6929	F1G1A105A107	C 1UF, K, 10V	1	PAVCCZ
		C6930	F1G1C104A146	C 0.1UF, , 16V	1	PAVCCZ
		C6931	F1G1A105A107	C 1UF, K, 10V	1	PAVCCZ
		C6932	F1G1C104A146	C 0.1UF, , 16V	1	PAVCCZ
		C6933	F1G1C104A146	C 0.1UF, , 16V	1	PAVCCZ
		C6934	F1G1H6R0A832	C 6PF, B, 50V	1	PAVCCZ
		C6935	F1G1H6R0A832	C 6PF, B, 50V	1	PAVCCZ
		C6936	F1J1C106A224	C 10UF, , 16V	1	PAVCCZ
		C6937	F1J1C106A224	C 10UF, , 16V	1	PAVCCZ
		C6938	F1G1C104A146	C 0.1UF, , 16V	1	PAVCCZ
		C6939	F1G1C104A146	C 0.1UF, , 16V	1	PAVCCZ
		C6940	F1G1C104A146	C 0.1UF, , 16V	1	PAVCCZ
		C6990	F1G1H5R0A947	C 5PF, , 50V	1	PAVCCZ
		C6991	F1G1H5R0A947	C 5PF, , 50V	1	PAVCCZ
	⚠	C7101	F0CAF224A218	P 0.22UF, K, 250V	1	PAVCCZ
	⚠	C7102	F0CAF224A218	P 0.22UF, K, 250V	1	PAVCCZ
	⚠	C7112	F1AAF471A019	C 470PF, K, 250V	1	PAVCCZ
	⚠	C7113	F1AAF471A019	C 470PF, K, 250V	1	PAVCCZ
	⚠	C7114	F1AAF471A019	C 470PF, K, 250V	1	PAVCCZ
		C7201	F1H1C105A178	C 1UF, -, 16V	1	PAVCCZ
		C7202	F1H1H104B047	C 100NF, , 50V	1	PAVCCZ
		C7203	F1H1H102B052	C 1000PF, -, 50V	1	PAVCCZ
		C7204	F1J1H105A918	C 1UF, K, 50V	1	PAVCCZ
		C7205	F1H1H222A842	C 2200PF, K, 50V	1	PAVCCZ
		C7206	F1H1H104B047	C 100NF, , 50V	1	PAVCCZ

Change	Safety	Ref. No.	Part No.	Part Name & Description	Q'ty	Remarks
		C7207	F1H1H103B047	C 10NF, , 50V	1	PAVCCZ
		C7208	F1H1H103B047	C 10NF, , 50V	1	PAVCCZ
		C7210	ECWFD2W105KC	P 1UF, K, 450V	1	PAVCCZ
		C7251	F1A3A331A078	C 330PF, J, 1KV	1	PAVCCZ
		C7252	F1A3A331A078	C 330PF, J, 1KV	1	PAVCCZ
		C7255	F2A2W1010021	E 100UF, M, 450V	1	PAVCCZ
		C7301	F1H1C474A107	C 0.47UF, K, 16V	1	PAVCCZ
		C7302	F1H1H102B052	C 1000PF, -, 50V	1	PAVCCZ
		C7303	F1J1H105A918	C 1UF, K, 50V	1	PAVCCZ
		C7304	F1A3A101A079	C 100PF, K, 1KV	1	PAVCCZ
		C7305	F1J1H105A918	C 1UF, K, 50V	1	PAVCCZ
		C7306	F1H1H223A842	C 0.022UF, K, 50V	1	PAVCCZ
		C7307	F1H1H101B052	C 100PF, , 50V	1	PAVCCZ
		C7309	F1H1H103B047	C 10NF, , 50V	1	PAVCCZ
		C7310	F2A1V331B899	E 330UF, M, 35V	1	PAVCCZ
		C7312	F1H1C474A107	C 0.47UF, K, 16V	1	PAVCCZ
		C7313	F1H1H102B052	C 1000PF, -, 50V	1	PAVCCZ
		C7314	F1H1H220B043	C 22PF, J, 50V	1	PAVCCZ
		C7316	F1H1H102B052	C 1000PF, -, 50V	1	PAVCCZ
		C7317	F1A3A221A079	C 220PF, K, 1KV	1	PAVCCZ
		C7318	ECWH8183HAC	P 0.018UF, -, 800V	1	PAVCCZ
		C7330	F1H1H103B047	C 10NF, , 50V	1	PAVCCZ
		C7351	F1A3A331A078	C 330PF, J, 1KV	1	PAVCCZ
		C7361	F1A3A101A079	C 100PF, K, 1KV	1	PAVCCZ
		C7401	F1H1H104B047	C 100NF, , 50V	1	PAVCCZ
		C7403	F1H1H104B047	C 100NF, , 50V	1	PAVCCZ
		C7405	F1H1H104B047	C 100NF, , 50V	1	PAVCCZ
		C7407	F1J1E105A287	C 1000NF, , 25V	1	PAVCCZ
		C7423	F2AZZ2220005	E 2200UF, M, 18V	1	PAVCCZ
		C7425	F1H1H102B052	C 1000PF, -, 50V	1	PAVCCZ
		C7426	F1J1E474A272	C 470NF, , 25V	1	PAVCCZ
		C7428	F1J1E474A272	C 470NF, , 25V	1	PAVCCZ
		C7429	F1H1H102B052	C 1000PF, -, 50V	1	PAVCCZ
		C7430	F1H1H102B052	C 1000PF, -, 50V	1	PAVCCZ
		C7433	F2A2A2210034	E 220UF, M, 100V	1	PAVCCZ
		C7435	F1H1H102B052	C 1000PF, -, 50V	1	PAVCCZ
		C7436	F1H1H104B047	C 100NF, , 50V	1	PAVCCZ
		C7437	F1H1H102B052	C 1000PF, -, 50V	1	PAVCCZ
		C7438	F1H1H104B047	C 100NF, , 50V	1	PAVCCZ
		C7491	F1H1H103B047	C 10NF, , 50V	1	PAVCCZ
		C7492	F1K1E106A167	C 10UF, , 25V	1	PAVCCZ
		C7493	F1H1H104B047	C 100NF, , 50V	1	PAVCCZ
		C7494	F1H1H104B047	C 100NF, , 50V	1	PAVCCZ
		C7495	F1K1A226A060	C 22UF, K, 10V	1	PAVCCZ
		C7496	F1H1H222A842	C 2200PF, K, 50V	1	PAVCCZ
		C7499	F1K1A226A060	C 22UF, K, 10V	1	PAVCCZ
		C7801	F1J1E105A287	C 1000NF, , 25V	1	PAVCCZ
		C7802	F1H1H222A842	C 2200PF, K, 50V	1	PAVCCZ
		C7803	F1H1H103B047	C 10NF, , 50V	1	PAVCCZ
		C7804	F1H1H104B047	C 100NF, , 50V	1	PAVCCZ
		C7805	F1H1H103B047	C 10NF, , 50V	1	PAVCCZ
		C7806	F1H1H103B047	C 10NF, , 50V	1	PAVCCZ
		C7807	F1H1C224A178	C 0.22UF, , 16V	1	PAVCCZ
		C7808	F1H1C474A107	C 0.47UF, K, 16V	1	PAVCCZ
		C7809	F1H1H102B052	C 1000PF, -, 50V	1	PAVCCZ
		C7810	F1H1H333A842	C 0.033UF, K, 50V	1	PAVCCZ
		C7811	F1H1H103B047	C 10NF, , 50V	1	PAVCCZ
		C7812	F1J1E105A287	C 1000NF, , 25V	1	PAVCCZ
		C7814	F1J1E105A287	C 1000NF, , 25V	1	PAVCCZ
		C7815	F1J1E105A287	C 1000NF, , 25V	1	PAVCCZ
		C7816	F1J1E105A287	C 1000NF, , 25V	1	PAVCCZ
		C7817	F1J1E105A287	C 1000NF, , 25V	1	PAVCCZ

Model No. : TX-49GXW904 Parts List

Change	Safety	Ref. No.	Part No.	Part Name & Description	Q'ty	Remarks
		C7821	F1H1H102B052	C 1000PF, -, 50V	1	PAVCCZ
		C7822	F1J2E103A035	C 0.01UF, K, 250V	1	PAVCCZ
		C7851	F1K2J2210003	C 220PF, , 630V	1	PAVCCZ
		C7852	F1K2J2210003	C 220PF, , 630V	1	PAVCCZ
		C7853	F1H1H471B052	C 470PF, , 50V	1	PAVCCZ
		C7855	F2A2C6800010	E 68UF, M, 160V	1	PAVCCZ
		C7856	F1J2E103A035	C 0.01UF, K, 250V	1	PAVCCZ
		C7858	F1J2E102A036	C 1000PF, K, 250V	1	PAVCCZ
		C7859	F1J2E102A036	C 1000PF, K, 250V	1	PAVCCZ
		C7860	F1J1E105A287	C 1000NF, , 25V	1	PAVCCZ
		C7861	F1H1H102B052	C 1000PF, -, 50V	1	PAVCCZ
		C7871	F1H1H101B052	C 100PF, , 50V	1	PAVCCZ
		C7875	F1H1H101B052	C 100PF, , 50V	1	PAVCCZ
		C7879	F1H1H102B052	C 1000PF, -, 50V	1	PAVCCZ
		C7881	F1H1H102B052	C 1000PF, -, 50V	1	PAVCCZ
		C7882	F1H1H102B052	C 1000PF, -, 50V	1	PAVCCZ
		C7883	F1H1H102B052	C 1000PF, -, 50V	1	PAVCCZ
		C7884	F1H1H102B052	C 1000PF, -, 50V	1	PAVCCZ
		C7885	F1H1H102B052	C 1000PF, -, 50V	1	PAVCCZ
		C7886	F1H1H102B052	C 1000PF, -, 50V	1	PAVCCZ
		C7887	F1H1H102B052	C 1000PF, -, 50V	1	PAVCCZ
		C7888	F1H1H102B052	C 1000PF, -, 50V	1	PAVCCZ
		C8000	F1H0J1060012	C 10UF, M, 6.3V	1	PAVCCZ
		C8001	F1H0J1060012	C 10UF, M, 6.3V	1	PAVCCZ
		C8002	F1J1C106A224	C 10UF, , 16V	1	PAVCCZ
		C8003	F1G1C104A146	C 0.1UF, , 16V	1	PAVCCZ
		C8004	F1G1C104A146	C 0.1UF, , 16V	1	PAVCCZ
		C8005	F1G1C104A146	C 0.1UF, , 16V	1	PAVCCZ
		C8006	F1H0J1060012	C 10UF, M, 6.3V	1	PAVCCZ
		C8007	F1G1C104A146	C 0.1UF, , 16V	1	PAVCCZ
		C8008	F1J0J226A091	C 22UF, M, 6.3V	1	PAVCCZ
		C8009	F1G1C104A146	C 0.1UF, , 16V	1	PAVCCZ
		C8010	F1G1C104A146	C 0.1UF, , 16V	1	PAVCCZ
		C8011	F1G1C104A146	C 0.1UF, , 16V	1	PAVCCZ
		C8012	F1J1C106A224	C 10UF, , 16V	1	PAVCCZ
		C8013	F1G1C104A146	C 0.1UF, , 16V	1	PAVCCZ
		C8014	F1G1A105A107	C 1UF, K, 10V	1	PAVCCZ
		C8015	F1G1A105A107	C 1UF, K, 10V	1	PAVCCZ
		C8016	F1G1C104A146	C 0.1UF, , 16V	1	PAVCCZ
		C8017	F1G1C104A146	C 0.1UF, , 16V	1	PAVCCZ
		C8018	F1G1C104A146	C 0.1UF, , 16V	1	PAVCCZ
		C8019	F1G1C104A146	C 0.1UF, , 16V	1	PAVCCZ
		C8020	F1G1C104A146	C 0.1UF, , 16V	1	PAVCCZ
		C8021	F1G1C104A146	C 0.1UF, , 16V	1	PAVCCZ
		C8022	F1G1A105A107	C 1UF, K, 10V	1	PAVCCZ
		C8023	F1G1A105A107	C 1UF, K, 10V	1	PAVCCZ
		C8024	F1G1C104A146	C 0.1UF, , 16V	1	PAVCCZ
		C8025	F1G1C104A146	C 0.1UF, , 16V	1	PAVCCZ
		C8026	F1G1C104A146	C 0.1UF, , 16V	1	PAVCCZ
		C8027	F1G1C104A146	C 0.1UF, , 16V	1	PAVCCZ
		C8028	F1H1A475A102	C 4.7UF, K, 10V	1	PAVCCZ
		C8029	F1G1A105A107	C 1UF, K, 10V	1	PAVCCZ
		C8030	F1G1C104A146	C 0.1UF, , 16V	1	PAVCCZ
		C8031	F1G1C104A146	C 0.1UF, , 16V	1	PAVCCZ
		C8033	F1J0J226A091	C 22UF, M, 6.3V	1	PAVCCZ
		C8034	F1G1C104A146	C 0.1UF, , 16V	1	PAVCCZ
		C8035	F1H0G226A016	C 22UF, M, 4V	1	PAVCCZ
		C8036	F1G1A105A107	C 1UF, K, 10V	1	PAVCCZ
		C8037	F1G1A105A107	C 1UF, K, 10V	1	PAVCCZ
		C8038	F1G0J4750006	C 0.47UF, M, 6.3V	1	PAVCCZ
		C8039	F1G1A105A107	C 1UF, K, 10V	1	PAVCCZ
		C8040	F1G1A105A107	C 1UF, K, 10V	1	PAVCCZ

Model No. : TX-49GXW904 Parts List

Change	Safety	Ref. No.	Part No.	Part Name & Description	Q'ty	Remarks
		C8041	F1G1C104A146	C 0.1UF, , 16V	1	PAVCCZ
		C8042	F1H1A475A102	C 4.7UF, K, 10V	1	PAVCCZ
		C8043	F1H1A475A102	C 4.7UF, K, 10V	1	PAVCCZ
		C8044	F1G1A105A107	C 1UF, K, 10V	1	PAVCCZ
		C8045	F1G1C104A146	C 0.1UF, , 16V	1	PAVCCZ
		C8046	F1G1A105A107	C 1UF, K, 10V	1	PAVCCZ
		C8047	F1G1C104A146	C 0.1UF, , 16V	1	PAVCCZ
		C8048	F1G1C104A146	C 0.1UF, , 16V	1	PAVCCZ
		C8049	F1G1A105A107	C 1UF, K, 10V	1	PAVCCZ
		C8050	F1G1A105A107	C 1UF, K, 10V	1	PAVCCZ
		C8053	F1G1C104A146	C 0.1UF, , 16V	1	PAVCCZ
		C8054	F1G1C104A146	C 0.1UF, , 16V	1	PAVCCZ
		C8055	F1G1A105A107	C 1UF, K, 10V	1	PAVCCZ
		C8056	F1G1C104A146	C 0.1UF, , 16V	1	PAVCCZ
		C8058	F1G1A105A107	C 1UF, K, 10V	1	PAVCCZ
		C8059	F1G1A105A107	C 1UF, K, 10V	1	PAVCCZ
		C8060	F1G1A105A107	C 1UF, K, 10V	1	PAVCCZ
		C8061	F1G1A105A107	C 1UF, K, 10V	1	PAVCCZ
		C8062	F1G0J4750006	C 0.47UF, M, 6.3V	1	PAVCCZ
		C8063	F1H0J1060012	C 10UF, M, 6.3V	1	PAVCCZ
		C8064	F1G1A105A107	C 1UF, K, 10V	1	PAVCCZ
		C8065	F1G1A105A107	C 1UF, K, 10V	1	PAVCCZ
		C8066	F1G0J4750006	C 0.47UF, M, 6.3V	1	PAVCCZ
		C8067	F1G0J4750006	C 0.47UF, M, 6.3V	1	PAVCCZ
		C8068	F1G1A105A107	C 1UF, K, 10V	1	PAVCCZ
		C8069	F1G1A105A107	C 1UF, K, 10V	1	PAVCCZ
		C8070	F1H0J1060012	C 10UF, M, 6.3V	1	PAVCCZ
		C8071	F1G1C104A146	C 0.1UF, , 16V	1	PAVCCZ
		C8072	F1J0J226A091	C 22UF, M, 6.3V	1	PAVCCZ
		C8073	F1H0G226A016	C 22UF, M, 4V	1	PAVCCZ
		C8074	F1G0J4750006	C 0.47UF, M, 6.3V	1	PAVCCZ
		C8075	F1H0G226A016	C 22UF, M, 4V	1	PAVCCZ
		C8076	F1G0J4750006	C 0.47UF, M, 6.3V	1	PAVCCZ
		C8077	F1J0J226A091	C 22UF, M, 6.3V	1	PAVCCZ
		C8078	F1J0J226A091	C 22UF, M, 6.3V	1	PAVCCZ
		C8079	F1J0J226A091	C 22UF, M, 6.3V	1	PAVCCZ
		C8080	F1G1C104A146	C 0.1UF, , 16V	1	PAVCCZ
		C8081	F1G1C104A146	C 0.1UF, , 16V	1	PAVCCZ
		C8082	F1H0J1060012	C 10UF, M, 6.3V	1	PAVCCZ
		C8083	F1G0J4750006	C 0.47UF, M, 6.3V	1	PAVCCZ
		C8084	F1G0J4750006	C 0.47UF, M, 6.3V	1	PAVCCZ
		C8085	F1G1A105A107	C 1UF, K, 10V	1	PAVCCZ
		C8086	F1G0J4750006	C 0.47UF, M, 6.3V	1	PAVCCZ
		C8087	F1G1A105A107	C 1UF, K, 10V	1	PAVCCZ
		C8088	F1G0J4750006	C 0.47UF, M, 6.3V	1	PAVCCZ
		C8089	F1G0J4750006	C 0.47UF, M, 6.3V	1	PAVCCZ
		C8090	F1G1A105A107	C 1UF, K, 10V	1	PAVCCZ
		C8091	F1G1C104A146	C 0.1UF, , 16V	1	PAVCCZ
		C8092	F1G1C104A146	C 0.1UF, , 16V	1	PAVCCZ
		C8093	F1G1C104A146	C 0.1UF, , 16V	1	PAVCCZ
		C8094	F1G1C104A146	C 0.1UF, , 16V	1	PAVCCZ
		C8095	F1G1C104A146	C 0.1UF, , 16V	1	PAVCCZ
		C8096	F1G1C104A146	C 0.1UF, , 16V	1	PAVCCZ
		C8097	F1G1C104A146	C 0.1UF, , 16V	1	PAVCCZ
		C8098	F1G1C104A146	C 0.1UF, , 16V	1	PAVCCZ
		C8099	F1G1C104A146	C 0.1UF, , 16V	1	PAVCCZ
		C8100	F1G1C104A146	C 0.1UF, , 16V	1	PAVCCZ
		C8101	F1G1C104A146	C 0.1UF, , 16V	1	PAVCCZ
		C8102	F1G1C104A146	C 0.1UF, , 16V	1	PAVCCZ
		C8103	F1G1A105A107	C 1UF, K, 10V	1	PAVCCZ
		C8104	F1G1C104A146	C 0.1UF, , 16V	1	PAVCCZ
		C8105	F1G1C104A146	C 0.1UF, , 16V	1	PAVCCZ

Change	Safety	Ref. No.	Part No.	Part Name & Description	Q'ty	Remarks
		C8106	F1H0J1060012	C 10UF, M, 6.3V	1	PAVCCZ
		C8107	F1J0J226A091	C 22UF, M, 6.3V	1	PAVCCZ
		C8108	F1H0J1060012	C 10UF, M, 6.3V	1	PAVCCZ
		C8109	F1G0J4750006	C 0.47UF, M, 6.3V	1	PAVCCZ
		C8110	F1G0J4750006	C 0.47UF, M, 6.3V	1	PAVCCZ
		C8200	F1G1H222A946	C 2200PF, K, 50V	1	PAVCCZ
		C8201	F1G1C104A146	C 0.1UF, , 16V	1	PAVCCZ
		C8202	F1K1E106A167	C 10UF, , 25V	1	PAVCCZ
		C8203	F1K1E106A167	C 10UF, , 25V	1	PAVCCZ
		C8204	F1H1E104A161	C 0.1UF, , 25V	1	PAVCCZ
		C8205	F1G1E332A172	C 3300PF, K, 25V	1	PAVCCZ
		C8206	F1J0J226A091	C 22UF, M, 6.3V	1	PAVCCZ
		C8207	F1J0J226A091	C 22UF, M, 6.3V	1	PAVCCZ
		C8208	F1J0J226A091	C 22UF, M, 6.3V	1	PAVCCZ
		C8209	F1H1E105A153	C 1000NF, , 25V	1	PAVCCZ
		C8210	F1J1E475A257	C 4700NF, , 25V	1	PAVCCZ
		C8211	F1H1E104A161	C 0.1UF, , 25V	1	PAVCCZ
		C8215	F1J0J226A091	C 22UF, M, 6.3V	1	PAVCCZ
		C8216	F1J0J226A091	C 22UF, M, 6.3V	1	PAVCCZ
		C8217	F1J0J226A091	C 22UF, M, 6.3V	1	PAVCCZ
		C8220	F1K1E106A167	C 10UF, , 25V	1	PAVCCZ
		C8221	F1H1E104A161	C 0.1UF, , 25V	1	PAVCCZ
		C8222	F1J1C106A224	C 10UF, , 16V	1	PAVCCZ
		C8224	F1G1C104A146	C 0.1UF, , 16V	1	PAVCCZ
		C8228	F1J1C106A224	C 10UF, , 16V	1	PAVCCZ
		C8229	F1J1C106A224	C 10UF, , 16V	1	PAVCCZ
		C8230	F1J1C106A224	C 10UF, , 16V	1	PAVCCZ
		C8231	F1J1C106A224	C 10UF, , 16V	1	PAVCCZ
		C8232	F1J1C106A224	C 10UF, , 16V	1	PAVCCZ
		C8233	F1J1C106A224	C 10UF, , 16V	1	PAVCCZ
		C8235	F1K1E106A167	C 10UF, , 25V	1	PAVCCZ
		C8237	F1H1E104A161	C 0.1UF, , 25V	1	PAVCCZ
		C8238	F1G1C104A146	C 0.1UF, , 16V	1	PAVCCZ
		C8239	F1H1E104A161	C 0.1UF, , 25V	1	PAVCCZ
		C8240	F1K1E106A167	C 10UF, , 25V	1	PAVCCZ
		C8242	F1J0J226A091	C 22UF, M, 6.3V	1	PAVCCZ
		C8243	F1J0J226A091	C 22UF, M, 6.3V	1	PAVCCZ
		C8244	F1J0J226A091	C 22UF, M, 6.3V	1	PAVCCZ
		C8245	F1H1E104A161	C 0.1UF, , 25V	1	PAVCCZ
		C8246	F1K1E106A167	C 10UF, , 25V	1	PAVCCZ
		C8248	F1J0J226A091	C 22UF, M, 6.3V	1	PAVCCZ
		C8249	F1J0J226A091	C 22UF, M, 6.3V	1	PAVCCZ
		C8250	F1J0J226A091	C 22UF, M, 6.3V	1	PAVCCZ
		C8251	F1H1E104A161	C 0.1UF, , 25V	1	PAVCCZ
		C8252	F1K1E106A167	C 10UF, , 25V	1	PAVCCZ
		C8254	F1J0J226A091	C 22UF, M, 6.3V	1	PAVCCZ
		C8255	F1J0J226A091	C 22UF, M, 6.3V	1	PAVCCZ
		C8256	F1J0J226A091	C 22UF, M, 6.3V	1	PAVCCZ
		C8258	F1G0J4750006	C 0.47UF, M, 6.3V	1	PAVCCZ
		C8259	F1K1E106A167	C 10UF, , 25V	1	PAVCCZ
		C8260	F1H1E104A161	C 0.1UF, , 25V	1	PAVCCZ
		C8261	F1H1A475A102	C 4.7UF, K, 10V	1	PAVCCZ
		C8264	F1J0J226A091	C 22UF, M, 6.3V	1	PAVCCZ
		C8265	F1J0J226A091	C 22UF, M, 6.3V	1	PAVCCZ
		C8266	F1J0J226A091	C 22UF, M, 6.3V	1	PAVCCZ
		C8272	F1H1E104A161	C 0.1UF, , 25V	1	PAVCCZ
		C8273	F1K1E106A167	C 10UF, , 25V	1	PAVCCZ
		C8274	F1K1E106A167	C 10UF, , 25V	1	PAVCCZ
		C8278	F1J0J226A091	C 22UF, M, 6.3V	1	PAVCCZ
		C8401	F1G1C104A146	C 0.1UF, , 16V	1	PAVCCZ
		C8402	F1G1C104A146	C 0.1UF, , 16V	1	PAVCCZ
		C8403	F1G1C104A146	C 0.1UF, , 16V	1	PAVCCZ

Change	Safety	Ref. No.	Part No.	Part Name & Description	Q'ty	Remarks
		C8404	F1H0J1060012	C 10UF, M, 6.3V	1	PAVCCZ
		C8405	F1G1C104A146	C 0.1UF, , 16V	1	PAVCCZ
		C8406	F1G1C104A146	C 0.1UF, , 16V	1	PAVCCZ
		C8407	F1G1C104A146	C 0.1UF, , 16V	1	PAVCCZ
		C8408	F1G1C104A146	C 0.1UF, , 16V	1	PAVCCZ
		C8409	F1G1C104A146	C 0.1UF, , 16V	1	PAVCCZ
		C8410	F1G1C104A146	C 0.1UF, , 16V	1	PAVCCZ
		C8411	F1G0J4750006	C 0.47UF, M, 6.3V	1	PAVCCZ
		C8412	F1G1C104A146	C 0.1UF, , 16V	1	PAVCCZ
		C8413	F1G1C104A146	C 0.1UF, , 16V	1	PAVCCZ
		C8414	F1G0J4750006	C 0.47UF, M, 6.3V	1	PAVCCZ
		C8415	F1G1C104A146	C 0.1UF, , 16V	1	PAVCCZ
		C8416	F1G1C104A146	C 0.1UF, , 16V	1	PAVCCZ
		C8417	F1G1C104A146	C 0.1UF, , 16V	1	PAVCCZ
		C8418	F1G1C104A146	C 0.1UF, , 16V	1	PAVCCZ
		C8420	F1G1C104A146	C 0.1UF, , 16V	1	PAVCCZ
		C8421	F1G1C104A146	C 0.1UF, , 16V	1	PAVCCZ
		C8422	F1G1C104A146	C 0.1UF, , 16V	1	PAVCCZ
		C8423	F1H0J1060012	C 10UF, M, 6.3V	1	PAVCCZ
		C8424	F1G1C104A146	C 0.1UF, , 16V	1	PAVCCZ
		C8425	F1G1C104A146	C 0.1UF, , 16V	1	PAVCCZ
		C8426	F1G1C104A146	C 0.1UF, , 16V	1	PAVCCZ
		C8427	F1G1C104A146	C 0.1UF, , 16V	1	PAVCCZ
		C8428	F1G1C104A146	C 0.1UF, , 16V	1	PAVCCZ
		C8429	F1G1C104A146	C 0.1UF, , 16V	1	PAVCCZ
		C8430	F1G1C104A146	C 0.1UF, , 16V	1	PAVCCZ
		C8431	F1G1C104A146	C 0.1UF, , 16V	1	PAVCCZ
		C8432	F1G0J4750006	C 0.47UF, M, 6.3V	1	PAVCCZ
		C8433	F1G1C104A146	C 0.1UF, , 16V	1	PAVCCZ
		C8434	F1G0J4750006	C 0.47UF, M, 6.3V	1	PAVCCZ
		C8435	F1G1C104A146	C 0.1UF, , 16V	1	PAVCCZ
		C8436	F1G1C104A146	C 0.1UF, , 16V	1	PAVCCZ
		C8437	F1G1C104A146	C 0.1UF, , 16V	1	PAVCCZ
		C8439	F1G1C104A146	C 0.1UF, , 16V	1	PAVCCZ
		C8440	F1G1C104A146	C 0.1UF, , 16V	1	PAVCCZ
		C8441	F1G1C104A146	C 0.1UF, , 16V	1	PAVCCZ
		C8442	F1H0J1060012	C 10UF, M, 6.3V	1	PAVCCZ
		C8443	F1G1C104A146	C 0.1UF, , 16V	1	PAVCCZ
		C8444	F1G1C104A146	C 0.1UF, , 16V	1	PAVCCZ
		C8445	F1G1C104A146	C 0.1UF, , 16V	1	PAVCCZ
		C8446	F1G1C104A146	C 0.1UF, , 16V	1	PAVCCZ
		C8447	F1G1C104A146	C 0.1UF, , 16V	1	PAVCCZ
		C8448	F1G1C104A146	C 0.1UF, , 16V	1	PAVCCZ
		C8449	F1G1C104A146	C 0.1UF, , 16V	1	PAVCCZ
		C8450	F1G1C104A146	C 0.1UF, , 16V	1	PAVCCZ
		C8451	F1G0J4750006	C 0.47UF, M, 6.3V	1	PAVCCZ
		C8452	F1G1C104A146	C 0.1UF, , 16V	1	PAVCCZ
		C8453	F1G0J4750006	C 0.47UF, M, 6.3V	1	PAVCCZ
		C8454	F1G1C104A146	C 0.1UF, , 16V	1	PAVCCZ
		C8455	F1G1C104A146	C 0.1UF, , 16V	1	PAVCCZ
		C8456	F1G1C104A146	C 0.1UF, , 16V	1	PAVCCZ
		C8458	F1G1C104A146	C 0.1UF, , 16V	1	PAVCCZ
		C8459	F1G1C104A146	C 0.1UF, , 16V	1	PAVCCZ
		C8460	F1G1C104A146	C 0.1UF, , 16V	1	PAVCCZ
		C8461	F1H0J1060012	C 10UF, M, 6.3V	1	PAVCCZ
		C8462	F1G1C104A146	C 0.1UF, , 16V	1	PAVCCZ
		C8463	F1G1C104A146	C 0.1UF, , 16V	1	PAVCCZ
		C8464	F1G1C104A146	C 0.1UF, , 16V	1	PAVCCZ
		C8465	F1G1C104A146	C 0.1UF, , 16V	1	PAVCCZ
		C8466	F1G1C104A146	C 0.1UF, , 16V	1	PAVCCZ
		C8467	F1G1C104A146	C 0.1UF, , 16V	1	PAVCCZ
		C8468	F1G1C104A146	C 0.1UF, , 16V	1	PAVCCZ

Model No. : TX-49GXW904 Parts List

Change	Safety	Ref. No.	Part No.	Part Name & Description	Q'ty	Remarks
		C8469	F1G0J4750006	C 0.47UF, M, 6.3V	1	PAVCCZ
		C8470	F1G0J4750006	C 0.47UF, M, 6.3V	1	PAVCCZ
		C8471	F1G1C104A146	C 0.1UF, , 16V	1	PAVCCZ
		C8472	F1G1C104A146	C 0.1UF, , 16V	1	PAVCCZ
		C8473	F1G1C104A146	C 0.1UF, , 16V	1	PAVCCZ
		C8474	F1G1C104A146	C 0.1UF, , 16V	1	PAVCCZ
		C8475	F1G1C104A146	C 0.1UF, , 16V	1	PAVCCZ
		C8476	F1G1C104A146	C 0.1UF, , 16V	1	PAVCCZ
		C8477	F1G1C104A146	C 0.1UF, , 16V	1	PAVCCZ
		C8478	F1G1C104A146	C 0.1UF, , 16V	1	PAVCCZ
		C8479	F1G1C104A146	C 0.1UF, , 16V	1	PAVCCZ
		C8480	F1G1C104A146	C 0.1UF, , 16V	1	PAVCCZ
		C8481	F1G1C104A146	C 0.1UF, , 16V	1	PAVCCZ
		C8482	F1G1C104A146	C 0.1UF, , 16V	1	PAVCCZ
		C8483	F1G1C104A146	C 0.1UF, , 16V	1	PAVCCZ
		C8484	F1G1C104A146	C 0.1UF, , 16V	1	PAVCCZ
		C8485	F1G1C104A146	C 0.1UF, , 16V	1	PAVCCZ
		C8486	F1G1C104A146	C 0.1UF, , 16V	1	PAVCCZ
		C8487	F1G1C104A146	C 0.1UF, , 16V	1	PAVCCZ
		C8488	F1G1C104A146	C 0.1UF, , 16V	1	PAVCCZ
		C8489	F1G1C104A146	C 0.1UF, , 16V	1	PAVCCZ
		C8490	F1G1C104A146	C 0.1UF, , 16V	1	PAVCCZ
		C8491	F1G1C104A146	C 0.1UF, , 16V	1	PAVCCZ
		C8492	F1G1C104A146	C 0.1UF, , 16V	1	PAVCCZ
		C8493	F1G1C104A146	C 0.1UF, , 16V	1	PAVCCZ
		C8494	F1G1C104A146	C 0.1UF, , 16V	1	PAVCCZ
		C8495	F1G1C104A146	C 0.1UF, , 16V	1	PAVCCZ
		C8496	F1G1C104A146	C 0.1UF, , 16V	1	PAVCCZ
		C8497	F1G1C104A146	C 0.1UF, , 16V	1	PAVCCZ
		C8498	F1G1C104A146	C 0.1UF, , 16V	1	PAVCCZ
		C8499	F1G1C104A146	C 0.1UF, , 16V	1	PAVCCZ
		C8500	F1G1C104A146	C 0.1UF, , 16V	1	PAVCCZ
		C8501	F1G1C104A146	C 0.1UF, , 16V	1	PAVCCZ
		C8502	F1G1C104A146	C 0.1UF, , 16V	1	PAVCCZ
		C8503	F1G1C104A146	C 0.1UF, , 16V	1	PAVCCZ
		C8504	F1H0J1060012	C 10UF, M, 6.3V	1	PAVCCZ
		C8505	F1H0J1060012	C 10UF, M, 6.3V	1	PAVCCZ
		C8506	F1H1H103B047	C 10NF, , 50V	1	PAVCCZ
		C8507	F1G1A105A107	C 1UF, K, 10V	1	PAVCCZ
		C8508	F1H0J1060012	C 10UF, M, 6.3V	1	PAVCCZ
		C8509	F1G1C104A146	C 0.1UF, , 16V	1	PAVCCZ
		C8550	F1G1H7R0A963	C 7PF, D, 50V	1	PAVCCZ
		C8551	F1G1H7R0A963	C 7PF, D, 50V	1	PAVCCZ
		C8552	F1G1A105A107	C 1UF, K, 10V	1	PAVCCZ
		C8553	F1G1C104A146	C 0.1UF, , 16V	1	PAVCCZ
		C8701	F1J1C106A224	C 10UF, , 16V	1	PAVCCZ
		C8702	F1G1C104A146	C 0.1UF, , 16V	1	PAVCCZ
		C8703	F1J1C106A224	C 10UF, , 16V	1	PAVCCZ
		C8704	F1J1C106A224	C 10UF, , 16V	1	PAVCCZ
		C8705	F1G1C104A146	C 0.1UF, , 16V	1	PAVCCZ
		C8706	F1J1C106A224	C 10UF, , 16V	1	PAVCCZ
		C8707	F1G1C104A146	C 0.1UF, , 16V	1	PAVCCZ
		C8708	F1J1C106A224	C 10UF, , 16V	1	PAVCCZ
		C8709	F1J1C106A224	C 10UF, , 16V	1	PAVCCZ
		C8710	F1G1C104A146	C 0.1UF, , 16V	1	PAVCCZ
		C8712	F1G1C104A146	C 0.1UF, , 16V	1	PAVCCZ
		C8713	F1G1C104A146	C 0.1UF, , 16V	1	PAVCCZ
		C8714	F1J1C106A224	C 10UF, , 16V	1	PAVCCZ
		C8715	F1G1C104A146	C 0.1UF, , 16V	1	PAVCCZ
		C8716	F1G1C103A146	C 0.01UF, -, 16V	1	PAVCCZ
		C8717	F1J1C106A224	C 10UF, , 16V	1	PAVCCZ
		C8718	F1J1C106A224	C 10UF, , 16V	1	PAVCCZ

Model No. : TX-49GXW904 Parts List

Change	Safety	Ref. No.	Part No.	Part Name & Description	Q'ty	Remarks
		C8719	F1G1C104A146	C 0.1UF, , 16V	1	PAVCCZ
		C8721	F1G1C103A146	C 0.01UF, -, 16V	1	PAVCCZ
		C8725	F1J1C106A224	C 10UF, , 16V	1	PAVCCZ
		C8726	F1G1C104A146	C 0.1UF, , 16V	1	PAVCCZ
		C8727	F1G1C104A146	C 0.1UF, , 16V	1	PAVCCZ
		C8728	F1G1C104A146	C 0.1UF, , 16V	1	PAVCCZ
		C8729	F1G1C104A146	C 0.1UF, , 16V	1	PAVCCZ
		C8732	F1G1C104A146	C 0.1UF, , 16V	1	PAVCCZ
		C8733	F1G1C104A146	C 0.1UF, , 16V	1	PAVCCZ
		C8734	F1G1C104A146	C 0.1UF, , 16V	1	PAVCCZ
		C8735	F1H1E105A153	C 1000NF, , 25V	1	PAVCCZ
		C8737	F1G1H150A834	C 15PF, , 50V	1	PAVCCZ
		C8738	F1G1H120A948	C 12PF, J, 50V	1	PAVCCZ
		C8739	F1J1C106A224	C 10UF, , 16V	1	PAVCCZ
		C8740	F1G1C104A146	C 0.1UF, , 16V	1	PAVCCZ
		C8742	F1J1C106A224	C 10UF, , 16V	1	PAVCCZ
		C8744	F1J1C106A224	C 10UF, , 16V	1	PAVCCZ
		C8745	F1G1C104A146	C 0.1UF, , 16V	1	PAVCCZ
		C8764	F1G1C104A146	C 0.1UF, , 16V	1	PAVCCZ
		C8765	F1G1C104A146	C 0.1UF, , 16V	1	PAVCCZ
		C8910	F1H1C105A167	C 1UF, , 16V	1	PAVCCZ
		C8911	F1G1C104A146	C 0.1UF, , 16V	1	PAVCCZ
		C8912	F1J1C106A224	C 10UF, , 16V	1	PAVCCZ
		C8913	F1G1C104A146	C 0.1UF, , 16V	1	PAVCCZ
		C8914	F1J1C106A224	C 10UF, , 16V	1	PAVCCZ
		C8920	F1G1C104A146	C 0.1UF, , 16V	1	PAVCCZ
		C8922	F1G1C104A146	C 0.1UF, , 16V	1	PAVCCZ
		C8926	F1J1C106A224	C 10UF, , 16V	1	PAVCCZ
		C8931	F1G1C104A146	C 0.1UF, , 16V	1	PAVCCZ
		CF7101	D4CAY2R2A152	NTC THERMISTOR	1	PAVCCZ
		D2800	DZ2J056M0L	ZENER DIODE	1	PAVCCZ
		D2802	B3AGB0000083	LED	1	PAVCCZ
		D2851	DZ2J068M0L	DIODE	1	PAVCCZ
		D2852	DZ2J068M0L	DIODE	1	PAVCCZ
		D3108	DZ2J140M0L	DIODE	1	PAVCCZ
		D3109	DZ2J140M0L	DIODE	1	PAVCCZ
		D3110	DZ2J140M0L	DIODE	1	PAVCCZ
		D3111	DZ2J140M0L	DIODE	1	PAVCCZ
		D3112	DZ2J140M0L	DIODE	1	PAVCCZ
		D3113	DZ2J140M0L	DIODE	1	PAVCCZ
		D3200	K7AAAY000018	OPTICAL LINK	1	PAVCCZ
		D4516	B0ACRC000001	DIODE	1	PAVCCZ
		D5027	DZ2J033M0L	DIODE	1	PAVCCZ
		D5031	B0ACRC000001	DIODE	1	PAVCCZ
		D5032	B0ACRC000001	DIODE	1	PAVCCZ
		D5140	B0ADCK000001	DIODE	1	PAVCCZ
		D5170	DA2J10100L	DIODE	1	PAVCCZ
		D5171	DZ2J180M0L	ZENER DIODE	1	PAVCCZ
		D5172	B0ADCK000001	DIODE	1	PAVCCZ
		D5173	DZ2J062M0L	DIODE	1	PAVCCZ
		D5174	DA2J10100L	DIODE	1	PAVCCZ
		D6800	B0JCED000012	DIODE	1	PAVCCZ
		D6802	B0JCMD000092	DIODE	1	PAVCCZ
		D6803	B0ECKP000077	DIODE	1	PAVCCZ
		D6804	B0JCED000012	DIODE	1	PAVCCZ
		D6806	B0JCMD000092	DIODE	1	PAVCCZ
		D6807	B0ECKP000077	DIODE	1	PAVCCZ
		D6808	B0JCME000116	DIODE	1	PAVCCZ
		D6809	B0JCME000116	DIODE	1	PAVCCZ
	⚠	D7101	D4EAY621A216	VARISTOR	1	PAVCCZ

Model No. : TX-49GXW904 Parts List

Change	Safety	Ref. No.	Part No.	Part Name & Description	Q'ty	Remarks
	⚠	D7103	B0FBAR000047	DIODE	1	PAVCCZ
		D7104	B0AAMT000014	DIODE	1	PAVCCZ
		D7105	B0AAMT000014	DIODE	1	PAVCCZ
	⚠	D7107	D4EAY621A216	VARISTOR	1	PAVCCZ
		D7201	B0ACCD000008	DIODE	1	PAVCCZ
		D7252	B0HAPR000013	DIODE	1	PAVCCZ
		D7253	B0JCMG000043	DIODE	1	PAVCCZ
		D7301	B0BC015A0655	DIODE	1	PAVCCZ
		D7304	B0ACCD000008	DIODE	1	PAVCCZ
		D7305	B0ACCD000008	DIODE	1	PAVCCZ
		D7306	B0ACCD000008	DIODE	1	PAVCCZ
		D7307	B0HAGQ000001	DIODE	1	PAVCCZ
		D7309	B0AAKR000013	DIODE	1	PAVCCZ
		D7310	B0BC02700041	DIODE	1	PAVCCZ
		D7351	B0JCMG000043	DIODE	1	PAVCCZ
		D7361	B0JCMG000043	DIODE	1	PAVCCZ
		D7403	B0ACCD000008	DIODE	1	PAVCCZ
		D7407	B0ACCD000008	DIODE	1	PAVCCZ
		D7421	B0JBSL000095	DIODE	1	PAVCCZ
		D7422	B0ACCD000008	DIODE	1	PAVCCZ
		D7423	DA2J10100L	DIODE	1	PAVCCZ
		D7424	DA2J10100L	DIODE	1	PAVCCZ
		D7428	B0ACCD000008	DIODE	1	PAVCCZ
		D7431	B0FBCN000017	DIODE	1	PAVCCZ
		D7491	B0JCPE000051	DIODE	1	PAVCCZ
		D7492	B0BC6R8A0654	DIODE	1	PAVCCZ
		D7801	B0ACCD000008	DIODE	1	PAVCCZ
		D7802	B0ACCD000008	DIODE	1	PAVCCZ
		D7851	B0JBSM000009	DIODE	1	PAVCCZ
		D7852	B0JCMG000043	DIODE	1	PAVCCZ
		D8201	B0ACRC000001	DIODE	1	PAVCCZ
		D8202	B0ACRC000001	DIODE	1	PAVCCZ
		D8203	B0JCGD000021	DIODE	1	PAVCCZ
		F2000	ERBRD5R00X	FUSE	1	PAVCCZ
	⚠	F3410	ERBRD1R00X	FUSE	1	PAVCCZ
		F5003	ERBRD5R00X	FUSE	1	PAVCCZ
		F5200	ERBRD5R00X	FUSE	1	PAVCCZ
		F5220	ERBRD5R00X	FUSE	1	PAVCCZ
		F5290	ERBRD5R00X	FUSE	1	PAVCCZ
	⚠	F5700	ERBRD1R00X	FUSE	1	PAVCCZ
	⚠	F7101	K5E502YYA213	FUSE	1	PAVCCZ
		FL4570	EXC28CH900U	CHOKE COIL	1	PAVCCZ
		FL4571	EXC28CH900U	CHOKE COIL	1	PAVCCZ
		FL4572	EXC28CH900U	CHOKE COIL	1	PAVCCZ
		FL4573	EXC28CH900U	CHOKE COIL	1	PAVCCZ
		FL4578	EXC28CH900U	CHOKE COIL	1	PAVCCZ
		FL4579	EXC28CH900U	CHOKE COIL	1	PAVCCZ
		GK4	K1KY03BA0402	3P CONNECTOR	1	PAVCCZ
		IC3201	C1AB00003391	IC STEREO HEADPHONE DRIVER	1	PAVCCZ
		IC3400	C1AB00003800	IC AUDIO AMPLIFIER	1	PAVCCZ
		IC3401	C0DBGYY06358	IC VOLTAGE REGULATOR	1	PAVCCZ
		IC4506	C0DBEYY00226	IC VOLTAGE REGULATOR	1	PAVCCZ
		IC5000	AN34043AAVF	IC ANALOG ASIC	1	PAVCCZ
		IC5200	C0DBAYY02861	IC DC/DC CONVERTER	1	PAVCCZ
		IC5220	C0DBAYY03058	IC DC/DC CONVERTER	1	PAVCCZ
		IC5240	C0DBGYY06358	IC VOLTAGE REGULATOR	1	PAVCCZ
		IC5260	C0DBAYY03060	IC DC/DC CONVERTER	1	PAVCCZ
		IC5290	C0DBAYY02861	IC DC/DC CONVERTER	1	PAVCCZ

Model No. : TX-49GXW904 Parts List

Change	Safety	Ref. No.	Part No.	Part Name & Description	Q'ty	Remarks
		IC5705	C0DBAYY02861	IC DC/DC CONVERTER	1	PAVCCZ
		IC5912	C1ZBZ0006157	IC TEMPERATURE SENSOR	1	PAVCCZ
		IC6400	C1ZBZ0006108	IC DUAL CI CONTROLLER	1	PAVCCZ
		IC6405A	C0DBZYY00723	IC SWITCH	1	PAVCCZ
		IC6411	C0JBAZ003225	IC OCTAL BUS BUFFER	1	PAVCCZ
		IC6414	C0JBAU000010	IC LEVEL SHIFTER	1	PAVCCZ
		IC6420	C0JBAU000043	IC OCTAL BUS BUFFER	1	PAVCCZ
		IC6421	C0JBAU000043	IC OCTAL BUS BUFFER	1	PAVCCZ
		IC6422	C0JBAU000043	IC OCTAL BUS BUFFER	1	PAVCCZ
		IC6423	C0JBAU000043	IC OCTAL BUS BUFFER	1	PAVCCZ
		IC6505A	C0DBZYY00723	IC SWITCH	1	PAVCCZ
		IC6511	C0JBAZ003225	IC OCTAL BUS BUFFER	1	PAVCCZ
		IC6514	C0JBAU000010	IC LEVEL SHIFTER	1	PAVCCZ
		IC6804	C1AB00004036	IC LNB SUPPLY / CONTROL	1	PAVCCZ
		IC6805	C1AB00004036	IC LNB SUPPLY / CONTROL	1	PAVCCZ
		IC6807	C1AB00004512	IC DVB-T2/T/C/S2/S DEMODULATOR	1	PAVCCZ
		IC6808	C1AB00004512	IC DVB-T2/T/C/S2/S DEMODULATOR	1	PAVCCZ
		IC7201	C0DBBYY00131	IC PFC CONTROLLER	1	PAVCCZ
		IC7301	C0DBAYY02736	IC RESONANT CONTROLLER	1	PAVCCZ
		IC7401	C0DBZYY00531	IC SHUNT REGULATOR	1	PAVCCZ
		IC7491	B1LBZ0000070	IC DC/DC CONVERTER	1	PAVCCZ
		IC7800	C0ZBZ0002164	IC LED DRIVER FOR BACKLIGHT	1	PAVCCZ
		IC7860	C0ZBZ0002596	IC SWITCHING DRIVER	1	PAVCCZ
	⚠	IC8000	A-49GXW904	CIRCUIT BOARD A	1	PAVCCZ
		IC8200	NN30332A-VB	IC DC/DC CONVERTER	1	PAVCCZ
		IC8201	C0DBAYY03076	IC DC/DC CONVERTER	1	PAVCCZ
		IC8202	C0DBZYY00934	IC POWER MANAGEMENT	1	PAVCCZ
		IC8400	C3ABWY000037	IC 8GBIT DDR4 SDRAM	1	PAVCCZ
		IC8401	C3ABWY000037	IC 8GBIT DDR4 SDRAM	1	PAVCCZ
		IC8402	C3ABVY000110	IC 4GBIT DDR4 SDRAM	1	PAVCCZ
		IC8403	C3ABVY000110	IC 4GBIT DDR4 SDRAM	1	PAVCCZ
		IC8404	C0DBEYY00377	IC REGULATOR	1	PAVCCZ
		IC8701	C0DBZYY00723	IC SWITCH	1	PAVCCZ
		IC8702	C0DBZYY00723	IC SWITCH	1	PAVCCZ
		IC8703	C0DBZYY00723	IC SWITCH	1	PAVCCZ
		IC8705	C1CB00004168	IC USB HUB	1	PAVCCZ
		IC8706	C0DBZYY00723	IC SWITCH	1	PAVCCZ
	⚠	IC8920	A-49GXW904	CIRCUIT BOARD A	1	PAVCCZ
		J204	J0JYA0000043	FILTER	1	PAVCCZ
		JA1	D0GFR00J0005	M 0 OHM, J, 1/4W	1	PAVCCZ
		JA10	D0GFR00J0005	M 0 OHM, J, 1/4W	1	PAVCCZ
		JA11	D0GFR00J0005	M 0 OHM, J, 1/4W	1	PAVCCZ
		JA3	D0GFR00J0005	M 0 OHM, J, 1/4W	1	PAVCCZ
		JA4	D0GFR00J0005	M 0 OHM, J, 1/4W	1	PAVCCZ
		JA5	D0GFR00J0005	M 0 OHM, J, 1/4W	1	PAVCCZ
		JA6	D0GFR00J0005	M 0 OHM, J, 1/4W	1	PAVCCZ
		JA7	D0GFR00J0005	M 0 OHM, J, 1/4W	1	PAVCCZ
		JA8	D0GFR00J0005	M 0 OHM, J, 1/4W	1	PAVCCZ
		JA9	D0GFR00J0005	M 0 OHM, J, 1/4W	1	PAVCCZ
		JK3102	K1U307A00013	YUV V IN TERMINAL	1	PAVCCZ
		JK3103	K1U204A00021	AUDIO L-R IN TERMINAL	1	PAVCCZ
		JK3104	K2HC1YYB0095	JACK	1	PAVCCZ
		JK4701	K1FY119E0085	HDMI TERMINAL	1	PAVCCZ
		JK4702	K1FY119E0085	HDMI TERMINAL	1	PAVCCZ
		JK4703B	K1FY119D0039	HDMI TERMINAL	1	PAVCCZ
		JK6400	K1NAD6B00005	CI CONNECTOR	1	PAVCCZ
	⚠	JK7101	K2AAYA000005	AC INLET	1	PAVCCZ
		JK8600	K2LC1YYB0088	ETHERNET TERMINAL	1	PAVCCZ
		JK8701	K1FY104A0047	USB TERMINAL	1	PAVCCZ
		JK8702	K1FY104A0047	USB TERMINAL	1	PAVCCZ

Model No. : TX-49GXW904 Parts List

Change	Safety	Ref. No.	Part No.	Part Name & Description	Q'ty	Remarks
		JK8703	K1FY109B0047	USB3.0 TERMINAL	1	PAVCCZ
		JK8705	K1FY105E0017	USB TERMINAL	1	PAVCCZ
		JS7253	D0GB102JA065	M 1K OHM, J, 1/10W	1	PAVCCZ
		JS7800	D0GFR00J0005	M 0 OHM, J, 1/4W	1	PAVCCZ
		K10	K1KY07AA1311	7P CONNECTOR	1	PAVCCZ
		L2200	J0JYC0001009	FILTER	1	PAVCCZ
		L3105	J0JYC0000156	FILTER	1	PAVCCZ
		L3106	J0JYC0000156	FILTER	1	PAVCCZ
		L3162	J0JYC0000419	FILTER	1	PAVCCZ
		L3163	J0JYC0000419	FILTER	1	PAVCCZ
		L3164	J0JYC0000419	FILTER	1	PAVCCZ
		L3800	G1C150MA0533	COIL	1	PAVCCZ
		L3801	G1C150MA0533	COIL	1	PAVCCZ
		L3802	G1C150MA0533	COIL	1	PAVCCZ
		L3803	G1C150MA0533	COIL	1	PAVCCZ
		L5200	G1C3R3ZA0311	COIL	1	PAVCCZ
		L5220	G1C3R3ZA0388	COIL	1	PAVCCZ
		L5260	G1C3R3MA0858	COIL	1	PAVCCZ
		L5290	G1C3R3ZA0311	COIL	1	PAVCCZ
		L5701	G1C3R3MA0464	COIL	1	PAVCCZ
		L6700	J0JGC0000020	FILTER	1	PAVCCZ
		L6701	J0JYC0001009	FILTER	1	PAVCCZ
		L6704	J0JYC0001009	FILTER	1	PAVCCZ
		L6705	J0JYC0001009	FILTER	1	PAVCCZ
		L6803	J0JYC0001009	FILTER	1	PAVCCZ
		L6805	J0JYC0001009	FILTER	1	PAVCCZ
		L6806	G1C6R8MA0464	COIL	1	PAVCCZ
		L6807	G1C6R8MA0464	COIL	1	PAVCCZ
		L6808	J0JYC0001009	FILTER	1	PAVCCZ
		L6809	J0JYC0001009	FILTER	1	PAVCCZ
		L6810	J0JYC0001009	FILTER	1	PAVCCZ
		L6968	J0JCC0000413	FILTER	1	PAVCCZ
		L6969	J0JCC0000413	FILTER	1	PAVCCZ
		L6973	J0JCC0000413	FILTER	1	PAVCCZ
		L6974	J0JCC0000413	FILTER	1	PAVCCZ
		L7101	J0JYA0000043	FILTER	1	PAVCCZ
		L7112	J0JYA0000043	FILTER	1	PAVCCZ
		L7114	J0JYA0000043	FILTER	1	PAVCCZ
		L7251	J0JYA0000043	FILTER	1	PAVCCZ
		L7301	J0JYA0000043	FILTER	1	PAVCCZ
		L7351	J0JYA0000043	FILTER	1	PAVCCZ
		L7361	J0JYC0000729	FILTER	1	PAVCCZ
		L7491	G0C6R8MA0094	COIL	1	PAVCCZ
		L7810	J0JYA0000043	FILTER	1	PAVCCZ
		L7851	G0C360K00001	COIL	1	PAVCCZ
		L7852	J0JYC0000729	FILTER	1	PAVCCZ
		L7853	J0JYA0000043	FILTER	1	PAVCCZ
		L8200	G1C1R0MA0858	COIL	1	PAVCCZ
		L8201	G1CR47ZA0388	COIL	1	PAVCCZ
		L8202	G1C3R3ZA0388	COIL	1	PAVCCZ
		L8203	G1CR68Z00001	COIL	1	PAVCCZ
		L8204	G1CR47Z00003	COIL	1	PAVCCZ
		L8205	G1C1R0Z00009	COIL	1	PAVCCZ
		L8701	J0JYC0001009	FILTER	1	PAVCCZ
		L8702	J0JYC0001009	FILTER	1	PAVCCZ
		L8703	J0JYC0001009	FILTER	1	PAVCCZ
		L8704	J0JYC0001009	FILTER	1	PAVCCZ
		L8706	J0JYC0001009	FILTER	1	PAVCCZ
		L8900	J0JYC0001009	FILTER	1	PAVCCZ

Model No. : TX-49GXW904 Parts List

Change	Safety	Ref. No.	Part No.	Part Name & Description	Q'ty	Remarks
	⚠	LF7101	G0B110J00001	LINE FILTER	1	PAVCCZ
	⚠	LF7108	G0B143G00004	LINE FILTER	1	PAVCCZ
	⚠	LF7109	G0B143G00004	LINE FILTER	1	PAVCCZ
		P2A	K1KY16BA0491	16P CONNECTOR	1	PAVCCZ
		P3	K1KY13BA0660	13P CONNECTOR	1	PAVCCZ
		P5	K1KY03BA0747	3P CONNECTOR	1	PAVCCZ
	⚠	PA7422	ERBRE1R00V	FUSE	1	PAVCCZ
	⚠	PC7301	B3PAA0000704	PHOTO COUPLER	1	PAVCCZ
	⚠	PC7302	B3PAA0000704	PHOTO COUPLER	1	PAVCCZ
	⚠	PC7303	B3PAA0000707	PHOTO COUPLER	1	PAVCCZ
		Q2200	B1ABCE000015	TRANSISTOR	1	PAVCCZ
		Q2201	B1ABCE000015	TRANSISTOR	1	PAVCCZ
		Q5140	B1ABCE000015	TRANSISTOR	1	PAVCCZ
		Q5141	B1ABCE000015	TRANSISTOR	1	PAVCCZ
		Q5143	B1ABCF000231	TRANSISTOR	1	PAVCCZ
		Q5144	B1ABCF000231	TRANSISTOR	1	PAVCCZ
		Q6402	B1ABCE000015	TRANSISTOR	1	PAVCCZ
		Q6502	B1ABCE000015	TRANSISTOR	1	PAVCCZ
		Q7251	B1CERR000144	TRANSISTOR	1	PAVCCZ
		Q7301	B1ADGE000012	TRANSISTOR	1	PAVCCZ
		Q7302	B1ABCE000015	TRANSISTOR	1	PAVCCZ
		Q7351	B1CFRR000049	TRANSISTOR	1	PAVCCZ
		Q7352	B1ADGE000012	TRANSISTOR	1	PAVCCZ
		Q7361	B1CFRR000049	TRANSISTOR	1	PAVCCZ
		Q7402	B1CFHD000029	TRANSISTOR	1	PAVCCZ
		Q7404	B1CFHD000029	TRANSISTOR	1	PAVCCZ
		Q7421	B1CHRE000015	TRANSISTOR	1	PAVCCZ
		Q7422	B1CHRE000015	TRANSISTOR	1	PAVCCZ
		Q7800	B1CFJD000007	TRANSISTOR	1	PAVCCZ
		Q7801	B1ABCE000015	TRANSISTOR	1	PAVCCZ
		Q7802	B1ABCE000015	TRANSISTOR	1	PAVCCZ
		Q7803	B1ABCN000014	TRANSISTOR	1	PAVCCZ
		Q7804	B1ABCN000014	TRANSISTOR	1	PAVCCZ
		Q7805	B1CHRL000026	TRANSISTOR	1	PAVCCZ
		Q7806	B1CHRL000026	TRANSISTOR	1	PAVCCZ
		Q7851	B1CERM000066	TRANSISTOR	1	PAVCCZ
		Q7881	B1ADPG000002	TRANSISTOR	1	PAVCCZ
		Q7882	B1ADPG000002	TRANSISTOR	1	PAVCCZ
		Q7883	B1ADPG000002	TRANSISTOR	1	PAVCCZ
		Q7884	B1ADPG000002	TRANSISTOR	1	PAVCCZ
		Q7885	B1ADPG000002	TRANSISTOR	1	PAVCCZ
		Q7886	B1ADPG000002	TRANSISTOR	1	PAVCCZ
		Q7887	B1ADPG000002	TRANSISTOR	1	PAVCCZ
		Q7888	B1ADPG000002	TRANSISTOR	1	PAVCCZ
		Q8200	B1CFRD000100	TRANSISTOR	1	PAVCCZ
		Q8201	B1CFRD000100	TRANSISTOR	1	PAVCCZ
		Q8202	B1CFRD000100	TRANSISTOR	1	PAVCCZ
		Q8400	B1CBHG000002	TRANSISTOR	1	PAVCCZ
		R0054	D0GAR00JA039	M 0 OHM, J, 1/16W	1	PAVCCZ
		R0076	D0GAR00JA039	M 0 OHM, J, 1/16W	1	PAVCCZ
		R0900	D0GA331JA039	M 330 OHM, J, 1/16W	1	PAVCCZ
		R0901	D0GA331JA039	M 330 OHM, J, 1/16W	1	PAVCCZ
		R0908	D0GAR00JA039	M 0 OHM, J, 1/16W	1	PAVCCZ
		R0909	D0GAR00JA039	M 0 OHM, J, 1/16W	1	PAVCCZ
		R0910	D0GAR00JA039	M 0 OHM, J, 1/16W	1	PAVCCZ
		R0911	D0GAR00JA039	M 0 OHM, J, 1/16W	1	PAVCCZ

Model No. : TX-49GXW904 Parts List

Change	Safety	Ref. No.	Part No.	Part Name & Description	Q'ty	Remarks
		R0912	D0GA330JA039	M 33 OHM, J, 1/16W	1	PAVCCZ
		R0913	D0GA330JA039	M 33 OHM, J, 1/16W	1	PAVCCZ
		R0914	D0GA222JA039	M 2K2 OHM, J, 1/16W	1	PAVCCZ
		R0915	D0GA222JA039	M 2K2 OHM, J, 1/16W	1	PAVCCZ
		R0918	D0GA222JA039	M 2K2 OHM, J, 1/16W	1	PAVCCZ
		R0919	D0GA222JA039	M 2K2 OHM, J, 1/16W	1	PAVCCZ
		R0920	D0GA330JA039	M 33 OHM, J, 1/16W	1	PAVCCZ
		R0921	D0GA330JA039	M 33 OHM, J, 1/16W	1	PAVCCZ
		R0924	D0GA330JA039	M 33 OHM, J, 1/16W	1	PAVCCZ
		R0930	D0GAR00JA039	M 0 OHM, J, 1/16W	1	PAVCCZ
		R0931	D0GAR00JA039	M 0 OHM, J, 1/16W	1	PAVCCZ
		R0934	D0GAR00JA039	M 0 OHM, J, 1/16W	1	PAVCCZ
		R0935	D0GAR00JA039	M 0 OHM, J, 1/16W	1	PAVCCZ
		R0948	D0GA272JA039	M 2K7 OHM, J, 1/16W	1	PAVCCZ
		R0949	D0GA272JA039	M 2K7 OHM, J, 1/16W	1	PAVCCZ
		R0951	D0GA473JA039	M 47K OHM, J, 1/16W	1	PAVCCZ
		R0955	D0GA330JA039	M 33 OHM, J, 1/16W	1	PAVCCZ
		R0956	D0GA473JA039	M 47K OHM, J, 1/16W	1	PAVCCZ
		R0960	D0GA330JA039	M 33 OHM, J, 1/16W	1	PAVCCZ
		R0961	D0GA330JA039	M 33 OHM, J, 1/16W	1	PAVCCZ
		R0962	D0GA330JA039	M 33 OHM, J, 1/16W	1	PAVCCZ
		R0963	D0GAR00JA039	M 0 OHM, J, 1/16W	1	PAVCCZ
		R0964	D0GAR00JA039	M 0 OHM, J, 1/16W	1	PAVCCZ
		R0973	D0GA330JA039	M 33 OHM, J, 1/16W	1	PAVCCZ
		R0974	D0GA330JA039	M 33 OHM, J, 1/16W	1	PAVCCZ
		R2001	D0GA102JA039	M 1K OHM, J, 1/16W	1	PAVCCZ
		R2004	D0GA102JA039	M 1K OHM, J, 1/16W	1	PAVCCZ
		R2009	D0GA680JA039	M 68 OHM, J, 1/16W	1	PAVCCZ
		R2011	D0GA101JA039	M 100 OHM, J, 1/16W	1	PAVCCZ
		R2012	D0GA101JA039	M 100 OHM, J, 1/16W	1	PAVCCZ
		R2015	D0GA470JA039	M 47 OHM, J, 1/16W	1	PAVCCZ
		R2016	D0GA103JA039	M 10K OHM, J, 1/16W	1	PAVCCZ
		R2019	D0GA103JA039	M 10K OHM, J, 1/16W	1	PAVCCZ
		R2021	D0GA103JA039	M 10K OHM, J, 1/16W	1	PAVCCZ
		R2022	D0GA103JA039	M 10K OHM, J, 1/16W	1	PAVCCZ
		R2035	D0GA223JA039	M 22K OHM, J, 1/16W	1	PAVCCZ
		R2036	D1BA7151A023	M 7K15 OHM, F, 1/16W	1	PAVCCZ
		R2037	D1BA3092A023	M 30K9 OHM, F, 1/16W	1	PAVCCZ
		R2041	D0GA103JA039	M 10K OHM, J, 1/16W	1	PAVCCZ
		R2043	D0GA101JA039	M 100 OHM, J, 1/16W	1	PAVCCZ
		R2044	D0GA473JA039	M 47K OHM, J, 1/16W	1	PAVCCZ
		R2046	D0GA101JA039	M 100 OHM, J, 1/16W	1	PAVCCZ
		R2252	D0GA392JA039	M 3K9 OHM, J, 1/16W	1	PAVCCZ
		R2253	D0GA153JA039	M 15K OHM, J, 1/16W	1	PAVCCZ
		R2254	D0GA102JA039	M 1K OHM, J, 1/16W	1	PAVCCZ
		R2260	D0GA103JA039	M 10K OHM, J, 1/16W	1	PAVCCZ
		R2261	D0GA473JA039	M 47K OHM, J, 1/16W	1	PAVCCZ
		R2263	D0GA223JA039	M 22K OHM, J, 1/16W	1	PAVCCZ
		R2264	D0GA473JA039	M 47K OHM, J, 1/16W	1	PAVCCZ
		R2299	D0GA223JA039	M 22K OHM, J, 1/16W	1	PAVCCZ
		R2800	D0GBR00J0004	M 0 OHM, J, 1/10W	1	PAVCCZ
		R2807	D0GBR00J0004	M 0 OHM, J, 1/10W	1	PAVCCZ
		R2820	D0GB470JA065	M 47 OHM, J, 1/10W	1	PAVCCZ
		R2821	D0GB102JA065	M 1K OHM, J, 1/10W	1	PAVCCZ
		R2823	D1BB4301A073	M 4K3 OHM, F, 1/10W	1	PAVCCZ
		R2824	D1BB1001A143	M 1K OHM, F, 1/10W	1	PAVCCZ
		R2852	D1BD1911A203	M 1K91 OHM, F, 1/8W	1	PAVCCZ
		R2853	D1BD3091A203	M 3K09 OHM, F, 1/8W	1	PAVCCZ
		R2854	D1BD6041A203	M 6K04 OHM, F, 1/8W	1	PAVCCZ
		R2855	D1BD1692A203	M 16K9 OHM, F, 1/8W	1	PAVCCZ
		R3101	D0GAR00JA039	M 0 OHM, J, 1/16W	1	PAVCCZ
		R3110	D1BD75R0A066	M 75 OHM, F, 1/8W	1	PAVCCZ

Model No. : TX-49GXW904 Parts List

Change	Safety	Ref. No.	Part No.	Part Name & Description	Q'ty	Remarks
		R3111	D1BD75R0A066	M 75 OHM, F, 1/8W	1	PAVCCZ
		R3112	D1BD75R0A066	M 75 OHM, F, 1/8W	1	PAVCCZ
		R3130	D0GAR00JA039	M 0 OHM, J, 1/16W	1	PAVCCZ
		R3131	D0GAR00JA039	M 0 OHM, J, 1/16W	1	PAVCCZ
		R3160	D0GAR00JA039	M 0 OHM, J, 1/16W	1	PAVCCZ
		R3161	D0GAR00JA039	M 0 OHM, J, 1/16W	1	PAVCCZ
		R3162	D0GAR00JA039	M 0 OHM, J, 1/16W	1	PAVCCZ
		R3166	D0GA100JA039	M 10 OHM, J, 1/16W	1	PAVCCZ
		R3170	D1H81014A042	M 100 OHM, J, 1/16W	1	PAVCCZ
		R3171	D0GAR00JA039	M 0 OHM, J, 1/16W	1	PAVCCZ
		R3174	D0GA473JA039	M 47K OHM, J, 1/16W	1	PAVCCZ
		R3178	D0GA473JA039	M 47K OHM, J, 1/16W	1	PAVCCZ
		R3188	D0GA333JA039	M 33K OHM, J, 1/16W	1	PAVCCZ
		R3189	D0GA333JA039	M 33K OHM, J, 1/16W	1	PAVCCZ
		R3191	D0GA473JA039	M 47K OHM, J, 1/16W	1	PAVCCZ
		R3193	D0GA103JA039	M 10K OHM, J, 1/16W	1	PAVCCZ
		R3196	D0GA101JA039	M 100 OHM, J, 1/16W	1	PAVCCZ
		R3200	D0GA101JA039	M 100 OHM, J, 1/16W	1	PAVCCZ
		R3216	D0GA102JA039	M 1K OHM, J, 1/16W	1	PAVCCZ
		R3217	D0GA102JA039	M 1K OHM, J, 1/16W	1	PAVCCZ
		R3225	D0GA102JA039	M 1K OHM, J, 1/16W	1	PAVCCZ
		R3403	D0GA102JA039	M 1K OHM, J, 1/16W	1	PAVCCZ
		R3410	D0GA473JA039	M 47K OHM, J, 1/16W	1	PAVCCZ
		R3412	D0GA102JA039	M 1K OHM, J, 1/16W	1	PAVCCZ
		R3413	D0GA103JA039	M 10K OHM, J, 1/16W	1	PAVCCZ
		R3414	D0GA103JA039	M 10K OHM, J, 1/16W	1	PAVCCZ
		R3415	D0GA103JA039	M 10K OHM, J, 1/16W	1	PAVCCZ
		R3416	D0GA103JA039	M 10K OHM, J, 1/16W	1	PAVCCZ
		R3417	D0GA103JA039	M 10K OHM, J, 1/16W	1	PAVCCZ
		R3418	D0GA103JA039	M 10K OHM, J, 1/16W	1	PAVCCZ
		R3419	D0GA103JA039	M 10K OHM, J, 1/16W	1	PAVCCZ
		R3420	D0GA103JA039	M 10K OHM, J, 1/16W	1	PAVCCZ
		R3421	D0GA103JA039	M 10K OHM, J, 1/16W	1	PAVCCZ
		R3422	D0GA103JA039	M 10K OHM, J, 1/16W	1	PAVCCZ
		R3429	D1H86804A042	M 68 OHM, J, 1/16W	1	PAVCCZ
		R3430	D0GA473JA039	M 47K OHM, J, 1/16W	1	PAVCCZ
		R3431	D0GA473JA039	M 47K OHM, J, 1/16W	1	PAVCCZ
		R3432	D0GA473JA039	M 47K OHM, J, 1/16W	1	PAVCCZ
		R3433	D0GA473JA039	M 47K OHM, J, 1/16W	1	PAVCCZ
		R3442	D0GA103JA039	M 10K OHM, J, 1/16W	1	PAVCCZ
		R3443	D0GA102JA039	M 1K OHM, J, 1/16W	1	PAVCCZ
		R3822	D0GA103JA039	M 10K OHM, J, 1/16W	1	PAVCCZ
		R4037	D0GA101JA039	M 100 OHM, J, 1/16W	1	PAVCCZ
		R4046	D0GAR00JA039	M 0 OHM, J, 1/16W	1	PAVCCZ
		R4047	D0GAR00JA039	M 0 OHM, J, 1/16W	1	PAVCCZ
		R4050	D0GA103JA039	M 10K OHM, J, 1/16W	1	PAVCCZ
		R4051	D0GA103JA039	M 10K OHM, J, 1/16W	1	PAVCCZ
		R4096	D0GA473JA039	M 47K OHM, J, 1/16W	1	PAVCCZ
		R4097	D0GA473JA039	M 47K OHM, J, 1/16W	1	PAVCCZ
		R4107	D0GA101JA039	M 100 OHM, J, 1/16W	1	PAVCCZ
		R4116	D0GA101JA039	M 100 OHM, J, 1/16W	1	PAVCCZ
		R4130	D0GA102JA039	M 1K OHM, J, 1/16W	1	PAVCCZ
		R4513	D0GA104JA039	M 100K OHM, J, 1/16W	1	PAVCCZ
		R4515	D0GA680JA039	M 68 OHM, J, 1/16W	1	PAVCCZ
		R4516	D0GA103JA039	M 10K OHM, J, 1/16W	1	PAVCCZ
		R4519	D0GA104JA039	M 100K OHM, J, 1/16W	1	PAVCCZ
		R4521	D0GA680JA039	M 68 OHM, J, 1/16W	1	PAVCCZ
		R4522	D0GA103JA039	M 10K OHM, J, 1/16W	1	PAVCCZ
		R4526	D0GA473JA039	M 47K OHM, J, 1/16W	1	PAVCCZ
		R4532	D0GA220JA039	M 22 OHM, J, 1/16W	1	PAVCCZ
		R4543	D0GA104JA039	M 100K OHM, J, 1/16W	1	PAVCCZ
		R4545	D0GA680JA039	M 68 OHM, J, 1/16W	1	PAVCCZ

Change	Safety	Ref. No.	Part No.	Part Name & Description	Q'ty	Remarks
		R4546	D0GA103JA039	M 10K OHM, J, 1/16W	1	PAVCCZ
		R4549	D0GA4R7JA039	M 4R7 OHM, J, 1/16W	1	PAVCCZ
		R4550	D0GA473JA039	M 47K OHM, J, 1/16W	1	PAVCCZ
		R4551	D0GA473JA039	M 47K OHM, J, 1/16W	1	PAVCCZ
		R4552	D0GA4R7JA039	M 4R7 OHM, J, 1/16W	1	PAVCCZ
		R4553	D0GA473JA039	M 47K OHM, J, 1/16W	1	PAVCCZ
		R4554	D0GA473JA039	M 47K OHM, J, 1/16W	1	PAVCCZ
		R4555	D0GA4R7JA039	M 4R7 OHM, J, 1/16W	1	PAVCCZ
		R4557	D0GA473JA039	M 47K OHM, J, 1/16W	1	PAVCCZ
		R4561	D1BA1800A023	M 180 OHM, F, 1/16W	1	PAVCCZ
		R4562	D1BA82R0A023	M 82 OHM, F, 1/16W	1	PAVCCZ
		R4563	D0GA473JA039	M 47K OHM, J, 1/16W	1	PAVCCZ
		R4566	D0GA473JA039	M 47K OHM, J, 1/16W	1	PAVCCZ
		R4587	D0GA472JA039	M 4K7 OHM, J, 1/16W	1	PAVCCZ
		R4588	D1H84R74A042	M 4R7 OHM, J, 1/16W (NETWORK)	1	PAVCCZ
		R4589	D1H84R74A042	M 4R7 OHM, J, 1/16W (NETWORK)	1	PAVCCZ
		R4590	D1H84R74A042	M 4R7 OHM, J, 1/16W (NETWORK)	1	PAVCCZ
		R4591	D1H84R74A042	M 4R7 OHM, J, 1/16W (NETWORK)	1	PAVCCZ
		R4592	D1H84R74A042	M 4R7 OHM, J, 1/16W (NETWORK)	1	PAVCCZ
		R4593	D1H84R74A042	M 4R7 OHM, J, 1/16W (NETWORK)	1	PAVCCZ
		R4602	D0GA680JA039	M 68 OHM, J, 1/16W	1	PAVCCZ
		R4603	D0GA680JA039	M 68 OHM, J, 1/16W	1	PAVCCZ
		R4604	D0GA680JA039	M 68 OHM, J, 1/16W	1	PAVCCZ
		R4605	D0GA680JA039	M 68 OHM, J, 1/16W	1	PAVCCZ
		R4606	D0GA680JA039	M 68 OHM, J, 1/16W	1	PAVCCZ
		R4607	D0GA680JA039	M 68 OHM, J, 1/16W	1	PAVCCZ
		R4617	D1BA4701A023	M 4K7 OHM, F, 1/16W	1	PAVCCZ
		R4618	D1BA1502A023	M 15K OHM, F, 1/16W	1	PAVCCZ
		R4650	D0GA473JA039	M 47K OHM, J, 1/16W	1	PAVCCZ
		R4661	D0GA103JA039	M 10K OHM, J, 1/16W	1	PAVCCZ
		R4662	D0GA103JA039	M 10K OHM, J, 1/16W	1	PAVCCZ
		R4663	D0GA103JA039	M 10K OHM, J, 1/16W	1	PAVCCZ
		R5008	D0GA683JA039	M 68K OHM, J, 1/16W	1	PAVCCZ
		R5009	D0GA103JA039	M 10K OHM, J, 1/16W	1	PAVCCZ
		R5017	D0GA473JA039	M 47K OHM, J, 1/16W	1	PAVCCZ
		R5022	D0GA153JA039	M 15K OHM, J, 1/16W	1	PAVCCZ
		R5023	D1BA5602A023	M 56K OHM, F, 1/16W	1	PAVCCZ
		R5036	D1BA1912A023	M 19K1 OHM, F, 1/16W	1	PAVCCZ
		R5042	D0GA473JA039	M 47K OHM, J, 1/16W	1	PAVCCZ
		R5098	D0GA103JA039	M 10K OHM, J, 1/16W	1	PAVCCZ
		R5099	D0GBR00J0004	M 0 OHM, J, 1/10W	1	PAVCCZ
		R5109	D0GB101JA065	M 100 OHM, J, 1/10W	1	PAVCCZ
		R5110	D0GA681JA039	M 680 OHM, J, 1/16W	1	PAVCCZ
		R5140	D0GA102JA039	M 1K OHM, J, 1/16W	1	PAVCCZ
		R5142	D0GA333JA039	M 33K OHM, J, 1/16W	1	PAVCCZ
		R5144	D0GA473JA039	M 47K OHM, J, 1/16W	1	PAVCCZ
		R5146	D0GA102JA039	M 1K OHM, J, 1/16W	1	PAVCCZ
		R5147	D0GA101JA039	M 100 OHM, J, 1/16W	1	PAVCCZ
		R5148	D0GA103JA039	M 10K OHM, J, 1/16W	1	PAVCCZ
		R5154	D1BA9101A023	M 9K1 OHM, F, 1/16W	1	PAVCCZ
		R5155	D1BA1242A023	M 12K4 OHM, F, 1/16W	1	PAVCCZ
		R5156	D0GA472JA039	M 4K7 OHM, J, 1/16W	1	PAVCCZ
		R5158	D0GA153JA039	M 15K OHM, J, 1/16W	1	PAVCCZ
		R5160	D0GA273JA039	M 27K OHM, J, 1/16W	1	PAVCCZ
		R5161	D0GA103JA039	M 10K OHM, J, 1/16W	1	PAVCCZ
		R5201	D1BA1301A023	M 1K3 OHM, F, 1/16W	1	PAVCCZ
		R5202	D1BA4301A023	M 4K3 OHM, F, 1/16W	1	PAVCCZ
		R5221	D1BA1432A023	M 14K3 OHM, F, 1/16W	1	PAVCCZ
		R5222	D1BA1053A022	M 105K OHM, D, 1/16W	1	PAVCCZ
		R5223	D0GAR00JA039	M 0 OHM, J, 1/16W	1	PAVCCZ
		R5227	D0GA512JA039	M 5K1 OHM, J, 1/16W	1	PAVCCZ
		R5240	D0GA473JA039	M 47K OHM, J, 1/16W	1	PAVCCZ

Change	Safety	Ref. No.	Part No.	Part Name & Description	Q'ty	Remarks
		R5241	D0GA154JA039	M 150K OHM, J, 1/16W	1	PAVCCZ
		R5242	D0GBR00J0004	M 0 OHM, J, 1/10W	1	PAVCCZ
		R5263	D0GA473JA039	M 47K OHM, J, 1/16W	1	PAVCCZ
		R5265	D0GA102JA039	M 1K OHM, J, 1/16W	1	PAVCCZ
		R5267	D0GA104JA039	M 100K OHM, J, 1/16W	1	PAVCCZ
		R5268	D0GA102JA039	M 1K OHM, J, 1/16W	1	PAVCCZ
		R5269	D1BB4642A073	M 46K4 OHM, F, 1/10W	1	PAVCCZ
		R5270	D1BB2431A073	M 2K43 OHM, F, 1/10W	1	PAVCCZ
		R5274	D0GBR00J0004	M 0 OHM, J, 1/10W	1	PAVCCZ
		R5292	D1BA9101A023	M 9K1 OHM, F, 1/16W	1	PAVCCZ
		R5293	D1BA2701A023	M 2K7 OHM, F, 1/16W	1	PAVCCZ
		R5294	D0GA103JA039	M 10K OHM, J, 1/16W	1	PAVCCZ
		R5297	D0GBR00J0004	M 0 OHM, J, 1/10W	1	PAVCCZ
		R5737	D1BA1432A023	M 14K3 OHM, F, 1/16W	1	PAVCCZ
		R5738	D1BA4701A023	M 4K7 OHM, F, 1/16W	1	PAVCCZ
		R5740	D0GAR00JA039	M 0 OHM, J, 1/16W	1	PAVCCZ
		R5741	D0GDR00J0004	M 0 OHM, J, 1/8W	1	PAVCCZ
		R5902	D0GA473JA039	M 47K OHM, J, 1/16W	1	PAVCCZ
		R6402	D0GAR00JA039	M 0 OHM, J, 1/16W	1	PAVCCZ
		R6403	D0GAR00JA039	M 0 OHM, J, 1/16W	1	PAVCCZ
		R6404	D0GAR00JA039	M 0 OHM, J, 1/16W	1	PAVCCZ
		R6405	D0GAR00JA039	M 0 OHM, J, 1/16W	1	PAVCCZ
		R6406	D0GAR00JA039	M 0 OHM, J, 1/16W	1	PAVCCZ
		R6407	D0GAR00JA039	M 0 OHM, J, 1/16W	1	PAVCCZ
		R6408	D0GAR00JA039	M 0 OHM, J, 1/16W	1	PAVCCZ
		R6409	D0GA100JA039	M 10 OHM, J, 1/16W	1	PAVCCZ
		R6410	D1H84704A042	M 47 OHM, J, 1/16W	1	PAVCCZ
		R6411	D1H84704A042	M 47 OHM, J, 1/16W	1	PAVCCZ
		R6412	D0GA473JA039	M 47K OHM, J, 1/16W	1	PAVCCZ
		R6413	D0GA473JA039	M 47K OHM, J, 1/16W	1	PAVCCZ
		R6414	D0GA100JA039	M 10 OHM, J, 1/16W	1	PAVCCZ
		R6415	D0GA100JA039	M 10 OHM, J, 1/16W	1	PAVCCZ
		R6416	D0GA100JA039	M 10 OHM, J, 1/16W	1	PAVCCZ
		R6419	D1H82204A042	M 22 OHM, J, 1/16W	1	PAVCCZ
		R6420	D1H82204A042	M 22 OHM, J, 1/16W	1	PAVCCZ
		R6421	D0GAR00JA039	M 0 OHM, J, 1/16W	1	PAVCCZ
		R6422	D1H81034A042	M 10K OHM, J, 1/16W	1	PAVCCZ
		R6423	D1H81034A042	M 10K OHM, J, 1/16W	1	PAVCCZ
		R6424	D1H82204A042	M 22 OHM, J, 1/16W	1	PAVCCZ
		R6425	D1H82204A042	M 22 OHM, J, 1/16W	1	PAVCCZ
		R6429	D0GA103JA039	M 10K OHM, J, 1/16W	1	PAVCCZ
		R6431	D0GA470JA039	M 47 OHM, J, 1/16W	1	PAVCCZ
		R6432	D0GAR00JA039	M 0 OHM, J, 1/16W	1	PAVCCZ
		R6433	D0GA470JA039	M 47 OHM, J, 1/16W	1	PAVCCZ
		R6434	D0GAR00JA039	M 0 OHM, J, 1/16W	1	PAVCCZ
		R6436	D0GA103JA039	M 10K OHM, J, 1/16W	1	PAVCCZ
		R6439	D0GA470JA039	M 47 OHM, J, 1/16W	1	PAVCCZ
		R6441	D0GA470JA039	M 47 OHM, J, 1/16W	1	PAVCCZ
		R6444	D0GA103JA039	M 10K OHM, J, 1/16W	1	PAVCCZ
		R6449	D0GA470JA039	M 47 OHM, J, 1/16W	1	PAVCCZ
		R6450	D0GA470JA039	M 47 OHM, J, 1/16W	1	PAVCCZ
		R6454	D1H86804A042	M 68 OHM, J, 1/16W	1	PAVCCZ
		R6455	D1H86804A042	M 68 OHM, J, 1/16W	1	PAVCCZ
		R6456	D0GA103JA039	M 10K OHM, J, 1/16W	1	PAVCCZ
		R6458	D0GA103JA039	M 10K OHM, J, 1/16W	1	PAVCCZ
		R6459	D0GA470JA039	M 47 OHM, J, 1/16W	1	PAVCCZ
		R6460	D0GA470JA039	M 47 OHM, J, 1/16W	1	PAVCCZ
		R6461	D0GA470JA039	M 47 OHM, J, 1/16W	1	PAVCCZ
		R6462	D1H84704A042	M 47 OHM, J, 1/16W	1	PAVCCZ
		R6463	D1H84704A042	M 47 OHM, J, 1/16W	1	PAVCCZ
		R6464	D0GA103JA039	M 10K OHM, J, 1/16W	1	PAVCCZ
		R6465	D0GAR00JA039	M 0 OHM, J, 1/16W	1	PAVCCZ

Change	Safety	Ref. No.	Part No.	Part Name & Description	Q'ty	Remarks
		R6466	D0GAR00JA039	M 0 OHM, J, 1/16W	1	PAVCCZ
		R6467	D0GAR00JA039	M 0 OHM, J, 1/16W	1	PAVCCZ
		R6468	D0GA680JA039	M 68 OHM, J, 1/16W	1	PAVCCZ
		R6471	D0GA680JA039	M 68 OHM, J, 1/16W	1	PAVCCZ
		R6472	D0GA680JA039	M 68 OHM, J, 1/16W	1	PAVCCZ
		R6473	D1H8R0040016	M 0 OHM, -, -	1	PAVCCZ
		R6474	D1H8R0040016	M 0 OHM, -, -	1	PAVCCZ
		R6475	D1H86804A042	M 68 OHM, J, 1/16W	1	PAVCCZ
		R6476	D1H86804A042	M 68 OHM, J, 1/16W	1	PAVCCZ
		R6477	D1H86804A042	M 68 OHM, J, 1/16W	1	PAVCCZ
		R6478	D1H86804A042	M 68 OHM, J, 1/16W	1	PAVCCZ
		R6479	D1H86804A042	M 68 OHM, J, 1/16W	1	PAVCCZ
		R6480	D0GAR00JA039	M 0 OHM, J, 1/16W	1	PAVCCZ
		R6481	D1H86804A042	M 68 OHM, J, 1/16W	1	PAVCCZ
		R6482	D1H86804A042	M 68 OHM, J, 1/16W	1	PAVCCZ
		R6483	D0GA103JA039	M 10K OHM, J, 1/16W	1	PAVCCZ
		R6484	D0GA103JA039	M 10K OHM, J, 1/16W	1	PAVCCZ
		R6486	D1H86804A042	M 68 OHM, J, 1/16W	1	PAVCCZ
		R6487	D1H81034A042	M 10K OHM, J, 1/16W	1	PAVCCZ
		R6488	D1H81034A042	M 10K OHM, J, 1/16W	1	PAVCCZ
		R6489	D0GA103JA039	M 10K OHM, J, 1/16W	1	PAVCCZ
		R6490	D1H81034A042	M 10K OHM, J, 1/16W	1	PAVCCZ
		R6491	D0GA473JA039	M 47K OHM, J, 1/16W	1	PAVCCZ
		R6492	D0GA470JA039	M 47 OHM, J, 1/16W	1	PAVCCZ
		R6493	D0GA223JA039	M 22K OHM, J, 1/16W	1	PAVCCZ
		R6494	D0GA470JA039	M 47 OHM, J, 1/16W	1	PAVCCZ
		R6495	D0GA470JA039	M 47 OHM, J, 1/16W	1	PAVCCZ
		R6496	D0GA223JA039	M 22K OHM, J, 1/16W	1	PAVCCZ
		R6497	D0GA103JA039	M 10K OHM, J, 1/16W	1	PAVCCZ
		R6498	D0GA473JA039	M 47K OHM, J, 1/16W	1	PAVCCZ
		R6499	D0GA103JA039	M 10K OHM, J, 1/16W	1	PAVCCZ
		R6500	D0GA100JA039	M 10 OHM, J, 1/16W	1	PAVCCZ
		R6501	D0GA100JA039	M 10 OHM, J, 1/16W	1	PAVCCZ
		R6502	D0GA100JA039	M 10 OHM, J, 1/16W	1	PAVCCZ
		R6503	D0GA100JA039	M 10 OHM, J, 1/16W	1	PAVCCZ
		R6504	D0GAR00JA039	M 0 OHM, J, 1/16W	1	PAVCCZ
		R6505	D0GAR00JA039	M 0 OHM, J, 1/16W	1	PAVCCZ
		R6506	D0GA472JA039	M 4K7 OHM, J, 1/16W	1	PAVCCZ
		R6508	D0GA103JA039	M 10K OHM, J, 1/16W	1	PAVCCZ
		R6510	D1H84704A042	M 47 OHM, J, 1/16W	1	PAVCCZ
		R6511	D1H84704A042	M 47 OHM, J, 1/16W	1	PAVCCZ
		R6512	D0GA473JA039	M 47K OHM, J, 1/16W	1	PAVCCZ
		R6513	D0GA473JA039	M 47K OHM, J, 1/16W	1	PAVCCZ
		R6514	D0GAR00JA039	M 0 OHM, J, 1/16W	1	PAVCCZ
		R6515	D0GAR00JA039	M 0 OHM, J, 1/16W	1	PAVCCZ
		R6520	D0GA103JA039	M 10K OHM, J, 1/16W	1	PAVCCZ
		R6521	D0GAR00JA039	M 0 OHM, J, 1/16W	1	PAVCCZ
		R6522	D0GAR00JA039	M 0 OHM, J, 1/16W	1	PAVCCZ
		R6523	D0GAR00JA039	M 0 OHM, J, 1/16W	1	PAVCCZ
		R6524	D0GAR00JA039	M 0 OHM, J, 1/16W	1	PAVCCZ
		R6526	D0GAR00JA039	M 0 OHM, J, 1/16W	1	PAVCCZ
		R6527	D0GA470JA039	M 47 OHM, J, 1/16W	1	PAVCCZ
		R6530	D0GA220JA039	M 22 OHM, J, 1/16W	1	PAVCCZ
		R6531	D0GA220JA039	M 22 OHM, J, 1/16W	1	PAVCCZ
		R6532	D0GA220JA039	M 22 OHM, J, 1/16W	1	PAVCCZ
		R6533	D0GA220JA039	M 22 OHM, J, 1/16W	1	PAVCCZ
		R6534	D0GA220JA039	M 22 OHM, J, 1/16W	1	PAVCCZ
		R6535	D0GA220JA039	M 22 OHM, J, 1/16W	1	PAVCCZ
		R6536	D0GA220JA039	M 22 OHM, J, 1/16W	1	PAVCCZ
		R6537	D0GAR00JA039	M 0 OHM, J, 1/16W	1	PAVCCZ
		R6538	D0GAR00JA039	M 0 OHM, J, 1/16W	1	PAVCCZ
		R6539	D0GAR00JA039	M 0 OHM, J, 1/16W	1	PAVCCZ

Change	Safety	Ref. No.	Part No.	Part Name & Description	Q'ty	Remarks
		R6541	D0GAR00JA039	M 0 OHM, J, 1/16W	1	PAVCCZ
		R6544	D0GA103JA039	M 10K OHM, J, 1/16W	1	PAVCCZ
		R6545	D0GAR00JA039	M 0 OHM, J, 1/16W	1	PAVCCZ
		R6546	D0GA472JA039	M 4K7 OHM, J, 1/16W	1	PAVCCZ
		R6547	D0GA472JA039	M 4K7 OHM, J, 1/16W	1	PAVCCZ
		R6548	D0GA472JA039	M 4K7 OHM, J, 1/16W	1	PAVCCZ
		R6549	D0GA222JA039	M 2K2 OHM, J, 1/16W	1	PAVCCZ
		R6550	D1BA2872A023	M 28K7 OHM, F, 1/16W	1	PAVCCZ
		R6551	D1BA2872A023	M 28K7 OHM, F, 1/16W	1	PAVCCZ
		R6552	D0GAR00JA039	M 0 OHM, J, 1/16W	1	PAVCCZ
		R6553	D0GAR00JA039	M 0 OHM, J, 1/16W	1	PAVCCZ
		R6554	D1H86804A042	M 68 OHM, J, 1/16W	1	PAVCCZ
		R6555	D1H86804A042	M 68 OHM, J, 1/16W	1	PAVCCZ
		R6556	D0GA103JA039	M 10K OHM, J, 1/16W	1	PAVCCZ
		R6558	D0GA103JA039	M 10K OHM, J, 1/16W	1	PAVCCZ
		R6559	D0GA470JA039	M 47 OHM, J, 1/16W	1	PAVCCZ
		R6560	D0GA470JA039	M 47 OHM, J, 1/16W	1	PAVCCZ
		R6561	D0GA470JA039	M 47 OHM, J, 1/16W	1	PAVCCZ
		R6562	D1H84704A042	M 47 OHM, J, 1/16W	1	PAVCCZ
		R6563	D1H84704A042	M 47 OHM, J, 1/16W	1	PAVCCZ
		R6564	D0GA103JA039	M 10K OHM, J, 1/16W	1	PAVCCZ
		R6568	D0GA680JA039	M 68 OHM, J, 1/16W	1	PAVCCZ
		R6571	D0GA680JA039	M 68 OHM, J, 1/16W	1	PAVCCZ
		R6572	D0GA680JA039	M 68 OHM, J, 1/16W	1	PAVCCZ
		R6573	D0GA100JA039	M 10 OHM, J, 1/16W	1	PAVCCZ
		R6575	D1H86804A042	M 68 OHM, J, 1/16W	1	PAVCCZ
		R6576	D1H86804A042	M 68 OHM, J, 1/16W	1	PAVCCZ
		R6577	D1H86804A042	M 68 OHM, J, 1/16W	1	PAVCCZ
		R6578	D1H86804A042	M 68 OHM, J, 1/16W	1	PAVCCZ
		R6579	D1H86804A042	M 68 OHM, J, 1/16W	1	PAVCCZ
		R6580	D0GAR00JA039	M 0 OHM, J, 1/16W	1	PAVCCZ
		R6581	D1H86804A042	M 68 OHM, J, 1/16W	1	PAVCCZ
		R6582	D1H86804A042	M 68 OHM, J, 1/16W	1	PAVCCZ
		R6583	D0GA103JA039	M 10K OHM, J, 1/16W	1	PAVCCZ
		R6584	D0GA103JA039	M 10K OHM, J, 1/16W	1	PAVCCZ
		R6586	D1H86804A042	M 68 OHM, J, 1/16W	1	PAVCCZ
		R6587	D1H81034A042	M 10K OHM, J, 1/16W	1	PAVCCZ
		R6588	D1H81034A042	M 10K OHM, J, 1/16W	1	PAVCCZ
		R6589	D0GA103JA039	M 10K OHM, J, 1/16W	1	PAVCCZ
		R6590	D1H81034A042	M 10K OHM, J, 1/16W	1	PAVCCZ
		R6591	D0GA473JA039	M 47K OHM, J, 1/16W	1	PAVCCZ
		R6592	D0GA470JA039	M 47 OHM, J, 1/16W	1	PAVCCZ
		R6593	D0GA223JA039	M 22K OHM, J, 1/16W	1	PAVCCZ
		R6594	D0GA470JA039	M 47 OHM, J, 1/16W	1	PAVCCZ
		R6595	D0GA470JA039	M 47 OHM, J, 1/16W	1	PAVCCZ
		R6596	D0GA223JA039	M 22K OHM, J, 1/16W	1	PAVCCZ
		R6597	D0GA103JA039	M 10K OHM, J, 1/16W	1	PAVCCZ
		R6598	D0GA473JA039	M 47K OHM, J, 1/16W	1	PAVCCZ
		R6599	D0GA103JA039	M 10K OHM, J, 1/16W	1	PAVCCZ
		R6607	D0GA103JA039	M 10K OHM, J, 1/16W	1	PAVCCZ
		R6608	D1H8R0040016	M 0 OHM, -, -	1	PAVCCZ
		R6615	D1H86804A042	M 68 OHM, J, 1/16W	1	PAVCCZ
		R6616	D1H86804A042	M 68 OHM, J, 1/16W	1	PAVCCZ
		R6617	D1H84704A042	M 47 OHM, J, 1/16W	1	PAVCCZ
		R6618	D1H84704A042	M 47 OHM, J, 1/16W	1	PAVCCZ
		R6621	D1H86804A042	M 68 OHM, J, 1/16W	1	PAVCCZ
		R6622	D0GA680JA039	M 68 OHM, J, 1/16W	1	PAVCCZ
		R6623	D0GA680JA039	M 68 OHM, J, 1/16W	1	PAVCCZ
		R6624	D1H86804A042	M 68 OHM, J, 1/16W	1	PAVCCZ
		R6625	D1H86804A042	M 68 OHM, J, 1/16W	1	PAVCCZ
		R6626	D1H86804A042	M 68 OHM, J, 1/16W	1	PAVCCZ
		R6627	D1H86804A042	M 68 OHM, J, 1/16W	1	PAVCCZ

Change	Safety	Ref. No.	Part No.	Part Name & Description	Q'ty	Remarks
		R6632	D0GA103JA039	M 10K OHM, J, 1/16W	1	PAVCCZ
		R6633	D1H8R0040016	M 0 OHM, -, -	1	PAVCCZ
		R6634	D1H86804A042	M 68 OHM, J, 1/16W	1	PAVCCZ
		R6652	D1H86804A042	M 68 OHM, J, 1/16W	1	PAVCCZ
		R6654	D0GA680JA039	M 68 OHM, J, 1/16W	1	PAVCCZ
		R6655	D0GA680JA039	M 68 OHM, J, 1/16W	1	PAVCCZ
		R6656	D0GA680JA039	M 68 OHM, J, 1/16W	1	PAVCCZ
		R6657	D0GA680JA039	M 68 OHM, J, 1/16W	1	PAVCCZ
		R6658	D0GA680JA039	M 68 OHM, J, 1/16W	1	PAVCCZ
		R6659	D0GA680JA039	M 68 OHM, J, 1/16W	1	PAVCCZ
		R6660	D0GA680JA039	M 68 OHM, J, 1/16W	1	PAVCCZ
		R6661	D0GA680JA039	M 68 OHM, J, 1/16W	1	PAVCCZ
		R6662	D0GA680JA039	M 68 OHM, J, 1/16W	1	PAVCCZ
		R6663	D1H84704A042	M 47 OHM, J, 1/16W	1	PAVCCZ
		R6664	D1H84704A042	M 47 OHM, J, 1/16W	1	PAVCCZ
		R6665	D0GA470JA039	M 47 OHM, J, 1/16W	1	PAVCCZ
		R6666	D0GA470JA039	M 47 OHM, J, 1/16W	1	PAVCCZ
		R6668	D0GA470JA039	M 47 OHM, J, 1/16W	1	PAVCCZ
		R6677	D0GAR00JA039	M 0 OHM, J, 1/16W	1	PAVCCZ
		R6678	D0GAR00JA039	M 0 OHM, J, 1/16W	1	PAVCCZ
		R6679	D0GAR00JA039	M 0 OHM, J, 1/16W	1	PAVCCZ
		R6680	D0GAR00JA039	M 0 OHM, J, 1/16W	1	PAVCCZ
		R6681	D0GAR00JA039	M 0 OHM, J, 1/16W	1	PAVCCZ
		R6682	D0GA470JA039	M 47 OHM, J, 1/16W	1	PAVCCZ
		R6686	D0GA680JA039	M 68 OHM, J, 1/16W	1	PAVCCZ
		R6687	D0GA472JA039	M 4K7 OHM, J, 1/16W	1	PAVCCZ
		R6688	D0GA472JA039	M 4K7 OHM, J, 1/16W	1	PAVCCZ
		R6689	D0GA472JA039	M 4K7 OHM, J, 1/16W	1	PAVCCZ
		R6690	D0GA472JA039	M 4K7 OHM, J, 1/16W	1	PAVCCZ
		R6691	D0GA680JA039	M 68 OHM, J, 1/16W	1	PAVCCZ
		R6692	D0GAR00JA039	M 0 OHM, J, 1/16W	1	PAVCCZ
		R6693	D0GAR00JA039	M 0 OHM, J, 1/16W	1	PAVCCZ
		R6694	D0GA101JA039	M 100 OHM, J, 1/16W	1	PAVCCZ
		R6695	D0GA472JA039	M 4K7 OHM, J, 1/16W	1	PAVCCZ
		R6700	D0GA221JA039	M 220 OHM, J, 1/16W	1	PAVCCZ
		R6701	D0GA221JA039	M 220 OHM, J, 1/16W	1	PAVCCZ
		R6703	D0GAR00JA039	M 0 OHM, J, 1/16W	1	PAVCCZ
		R6706	D1H8R0040016	M 0 OHM, -, -	1	PAVCCZ
		R6707	D1H8R0040016	M 0 OHM, -, -	1	PAVCCZ
		R6708	D1BA1001A023	M 1K OHM, F, 1/16W	1	PAVCCZ
		R6710	D0GAR00JA039	M 0 OHM, J, 1/16W	1	PAVCCZ
		R6711	D0GAR00JA039	M 0 OHM, J, 1/16W	1	PAVCCZ
		R6712	D0GAR00JA039	M 0 OHM, J, 1/16W	1	PAVCCZ
		R6713	D0GAR00JA039	M 0 OHM, J, 1/16W	1	PAVCCZ
		R6720	D0GF242JA048	M 2K4, J, 1/4W	1	PAVCCZ
		R6721	D0GF242JA048	M 2K4, J, 1/4W	1	PAVCCZ
		R6724	D0GA103JA039	M 10K OHM, J, 1/16W	1	PAVCCZ
		R6725	D0GAR00JA039	M 0 OHM, J, 1/16W	1	PAVCCZ
		R6731	D0GBR00J0004	M 0 OHM, J, 1/10W	1	PAVCCZ
		R6732	D1BA1001A023	M 1K OHM, F, 1/16W	1	PAVCCZ
		R6734	D0GAR00JA039	M 0 OHM, J, 1/16W	1	PAVCCZ
		R6736	D0GAR00JA039	M 0 OHM, J, 1/16W	1	PAVCCZ
		R6737	D0GAR00JA039	M 0 OHM, J, 1/16W	1	PAVCCZ
		R6753	D0GAR00JA039	M 0 OHM, J, 1/16W	1	PAVCCZ
		R6754	D0GAR00JA039	M 0 OHM, J, 1/16W	1	PAVCCZ
		R6755	D0GAR00JA039	M 0 OHM, J, 1/16W	1	PAVCCZ
		R6757	D0GA220JA039	M 22 OHM, J, 1/16W	1	PAVCCZ
		R6758	D0GAR00JA039	M 0 OHM, J, 1/16W	1	PAVCCZ
		R6759	D0GA220JA039	M 22 OHM, J, 1/16W	1	PAVCCZ
		R6762	D0GA220JA039	M 22 OHM, J, 1/16W	1	PAVCCZ
		R6765	D0GA220JA039	M 22 OHM, J, 1/16W	1	PAVCCZ
		R6766	D0GA220JA039	M 22 OHM, J, 1/16W	1	PAVCCZ

Model No. : TX-49GXW904 Parts List

Change	Safety	Ref. No.	Part No.	Part Name & Description	Q'ty	Remarks
		R6767	D0GA220JA039	M 22 OHM, J, 1/16W	1	PAVCCZ
		R6768	D0GA220JA039	M 22 OHM, J, 1/16W	1	PAVCCZ
		R6769	D0GA220JA039	M 22 OHM, J, 1/16W	1	PAVCCZ
		R6782	D0GAR00JA039	M 0 OHM, J, 1/16W	1	PAVCCZ
		R6783	D0GAR00JA039	M 0 OHM, J, 1/16W	1	PAVCCZ
		R6786	D0GAR00JA039	M 0 OHM, J, 1/16W	1	PAVCCZ
		R6787	D0GAR00JA039	M 0 OHM, J, 1/16W	1	PAVCCZ
		R6793	D0GAR00JA039	M 0 OHM, J, 1/16W	1	PAVCCZ
		R6794	D0GAR00JA039	M 0 OHM, J, 1/16W	1	PAVCCZ
		R6828	D0GAR00JA039	M 0 OHM, J, 1/16W	1	PAVCCZ
		R6829	D0GAR00JA039	M 0 OHM, J, 1/16W	1	PAVCCZ
		R6830	D0GAR00JA039	M 0 OHM, J, 1/16W	1	PAVCCZ
		R6831	D0GAR00JA039	M 0 OHM, J, 1/16W	1	PAVCCZ
		R6835	D0GBR00J0004	M 0 OHM, J, 1/10W	1	PAVCCZ
		R6843	D0GA103JA039	M 10K OHM, J, 1/16W	1	PAVCCZ
		R6844	D0GA474JA039	M 470K OHM, J, 1/16W	1	PAVCCZ
		R6845	D0GAR00JA039	M 0 OHM, J, 1/16W	1	PAVCCZ
		R6855	D0GA332JA039	M 3K3 OHM, J, 1/16W	1	PAVCCZ
		R6856	D0GA103JA039	M 10K OHM, J, 1/16W	1	PAVCCZ
		R6871	D0GAR00JA039	M 0 OHM, J, 1/16W	1	PAVCCZ
		R6875	D0GA103JA039	M 10K OHM, J, 1/16W	1	PAVCCZ
		R6876	D0GA332JA039	M 3K3 OHM, J, 1/16W	1	PAVCCZ
		R6877	D0GA332JA039	M 3K3 OHM, J, 1/16W	1	PAVCCZ
		R6880	D0GAR00JA039	M 0 OHM, J, 1/16W	1	PAVCCZ
		R6882	D0GAR00JA039	M 0 OHM, J, 1/16W	1	PAVCCZ
		R6883	D0GAR00JA039	M 0 OHM, J, 1/16W	1	PAVCCZ
		R6885	D1BA1622A023	M 16K2 OHM, F, 1/16W	1	PAVCCZ
		R6888	D1BA1622A023	M 16K2 OHM, F, 1/16W	1	PAVCCZ
		R6897	D0GA220JA039	M 22 OHM, J, 1/16W	1	PAVCCZ
		R6898	D0GA100JA039	M 10 OHM, J, 1/16W	1	PAVCCZ
		R6899	D0GA220JA039	M 22 OHM, J, 1/16W	1	PAVCCZ
		R6900	D0GA100JA039	M 10 OHM, J, 1/16W	1	PAVCCZ
		R6903	D0GA332JA039	M 3K3 OHM, J, 1/16W	1	PAVCCZ
		R6907	D1H84704A042	M 47 OHM, J, 1/16W	1	PAVCCZ
		R6914	D0GA103JA039	M 10K OHM, J, 1/16W	1	PAVCCZ
		R6915	D0GA332JA039	M 3K3 OHM, J, 1/16W	1	PAVCCZ
		R6916	D0GA332JA039	M 3K3 OHM, J, 1/16W	1	PAVCCZ
		R6918	D0GA103JA039	M 10K OHM, J, 1/16W	1	PAVCCZ
		R6919	D0GA100JA039	M 10 OHM, J, 1/16W	1	PAVCCZ
		R6920	D0GA100JA039	M 10 OHM, J, 1/16W	1	PAVCCZ
		R6921	D0GA220JA039	M 22 OHM, J, 1/16W	1	PAVCCZ
		R6922	D0GA220JA039	M 22 OHM, J, 1/16W	1	PAVCCZ
		R6923	D0GAR00JA039	M 0 OHM, J, 1/16W	1	PAVCCZ
		R6924	D0GA151JA039	M 150 OHM, J, 1/16W	1	PAVCCZ
		R6925	D0GA105JA039	M 1M OHM, J, 1/16W	1	PAVCCZ
		R6926	D0GA103JA039	M 10K OHM, J, 1/16W	1	PAVCCZ
		R6929	D0GAR00JA039	M 0 OHM, J, 1/16W	1	PAVCCZ
		R6932	D1H84704A042	M 47 OHM, J, 1/16W	1	PAVCCZ
		R6938	D0GAR00JA039	M 0 OHM, J, 1/16W	1	PAVCCZ
		R6974	D0GAR00JA039	M 0 OHM, J, 1/16W	1	PAVCCZ
		R6975	D0GAR00JA039	M 0 OHM, J, 1/16W	1	PAVCCZ
		R6980	D0GAR00JA039	M 0 OHM, J, 1/16W	1	PAVCCZ
		R6981	D0GAR00JA039	M 0 OHM, J, 1/16W	1	PAVCCZ
	⚠	R7101	D0GF105JA048	M 1M OHM, J, 1/4W	1	PAVCCZ
	⚠	R7102	D0GF105JA048	M 1M OHM, J, 1/4W	1	PAVCCZ
	⚠	R7103	D0GF105JA048	M 1M OHM, J, 1/4W	1	PAVCCZ
		R7104	D0GD102JA052	M 1K OHM, J, 1/8W	1	PAVCCZ
		R7105	D0GD102JA052	M 1K OHM, J, 1/8W	1	PAVCCZ
		R7201	D1BB1502A073	M 15K OHM, F, 1/10W	1	PAVCCZ
		R7202	D0GB470JA065	M 47 OHM, J, 1/10W	1	PAVCCZ
		R7203	D1BB3832A073	M 38K3 OHM, F, 1/10W	1	PAVCCZ
		R7204	D1BF1204A073	M 1M2 OHM, F, 1/4W	1	PAVCCZ

Change	Safety	Ref. No.	Part No.	Part Name & Description	Q'ty	Remarks
		R7205	D1BF1204A073	M 1M2 OHM, F, 1/4W	1	PAVCCZ
		R7206	D0GD100JA052	M 10 OHM, J, 1/8W	1	PAVCCZ
		R7207	D1BB4702A073	M 47K OHM, F, 1/10W	1	PAVCCZ
		R7208	D1BF1204A073	M 1M2 OHM, F, 1/4W	1	PAVCCZ
		R7209	D1BF1204A073	M 1M2 OHM, F, 1/4W	1	PAVCCZ
		R7210	D1BB1003A073	M 100K OHM, F, 1/10W	1	PAVCCZ
		R7211	D0GB223JA065	M 22K OHM, J, 1/10W	1	PAVCCZ
		R7212	D0GB683JA065	M 68K OHM, J, 1/10W	1	PAVCCZ
		R7213	D1BF1204A073	M 1M2 OHM, F, 1/4W	1	PAVCCZ
		R7214	D1BF1204A073	M 1M2 OHM, F, 1/4W	1	PAVCCZ
		R7215	D1BF1204A073	M 1M2 OHM, F, 1/4W	1	PAVCCZ
		R7216	D1BF1204A073	M 1M2 OHM, F, 1/4W	1	PAVCCZ
		R7217	D1BF1204A073	M 1M2 OHM, F, 1/4W	1	PAVCCZ
		R7218	D1BF1504A073	M 1M5 OHM, F, 1/4W	1	PAVCCZ
		R7219	D1BF1504A073	M 1M5 OHM, F, 1/4W	1	PAVCCZ
		R7251	D0GF221JA047	M 220 OHM, J, 1/3W	1	PAVCCZ
		R7252	D0GD220JA059	M 22 OHM, J, 1/4W	1	PAVCCZ
		R7253	D0GB103JA065	M 10K OHM, J, 1/10W	1	PAVCCZ
		R7255	ERX1SJR20V	M R2 OHM, J, 1W	1	PAVCCZ
		R7257	ERX1SJR20V	M R2 OHM, J, 1W	1	PAVCCZ
		R7301	D1BB3003A073	M 300K OHM, F, 1/10W	1	PAVCCZ
		R7302	D1BB3903A073	M 390K OHM, F, 1/10W	1	PAVCCZ
		R7304	D0GB222JA065	M 2K2 OHM, J, 1/10W	1	PAVCCZ
		R7306	D1BB2201A073	M 2K2 OHM, F, 1/10W	1	PAVCCZ
		R7307	D1BB1432A073	M 14K3 OHM, F, 1/10W	1	PAVCCZ
		R7308	D0GB224JA065	M 220K OHM, J, 1/10W	1	PAVCCZ
		R7309	D0GB473JA065	M 47K OHM, J, 1/10W	1	PAVCCZ
		R7310	D0GB223JA065	M 22K OHM, J, 1/10W	1	PAVCCZ
		R7311	D0GB223JA065	M 22K OHM, J, 1/10W	1	PAVCCZ
		R7314	D0GF4R7JA048	M 4R7 OHM, J, 1/4W	1	PAVCCZ
		R7315	D0GF4R7JA048	M 4R7 OHM, J, 1/4W	1	PAVCCZ
		R7316	D0GF430JA047	M 43 OHM, J, -	1	PAVCCZ
		R7317	D0GF430JA047	M 43 OHM, J, -	1	PAVCCZ
		R7318	D0GF1R0JA047	M 1 OHM, J, 1/3W	1	PAVCCZ
		R7319	D0GF1R0JA047	M 1 OHM, J, 1/3W	1	PAVCCZ
		R7320	D0GD222JA052	M 2K2 OHM, J, 1/8W	1	PAVCCZ
		R7321	D0GD222JA052	M 2K2 OHM, J, 1/8W	1	PAVCCZ
		R7322	D0GD222JA052	M 2K2 OHM, J, 1/8W	1	PAVCCZ
		R7323	D0GD222JA052	M 2K2 OHM, J, 1/8W	1	PAVCCZ
		R7324	D0GD222JA052	M 2K2 OHM, J, 1/8W	1	PAVCCZ
		R7328	D0GB101JA065	M 100 OHM, J, 1/10W	1	PAVCCZ
		R7336	D0GB101JA065	M 100 OHM, J, 1/10W	1	PAVCCZ
		R7351	D0GD220JA059	M 22 OHM, J, 1/4W	1	PAVCCZ
		R7352	D0GF391JA047	M 390 OHM, J, -	1	PAVCCZ
		R7353	D0GB103JA065	M 10K OHM, J, 1/10W	1	PAVCCZ
		R7361	D0GD220JA059	M 22 OHM, J, 1/4W	1	PAVCCZ
		R7362	D0GF391JA047	M 390 OHM, J, -	1	PAVCCZ
		R7363	D0GB103JA065	M 10K OHM, J, 1/10W	1	PAVCCZ
		R7401	D1BB1802A073	M 18K OHM, F, 1/10W	1	PAVCCZ
		R7402	D0GB472JA065	M 4K7 OHM, J, 1/10W	1	PAVCCZ
		R7403	D0GB472JA065	M 4K7 OHM, J, 1/10W	1	PAVCCZ
		R7404	D0GB103JA065	M 10K OHM, J, 1/10W	1	PAVCCZ
		R7405	D1BB3301A073	M 3K3 OHM, F, 1/10W	1	PAVCCZ
		R7406	D0GBR00J0004	M 0 OHM, J, 1/10W	1	PAVCCZ
		R7409	D0GB561JA065	M 560 OHM, J, 1/10W	1	PAVCCZ
		R7410	D0GB334JA065	M 330K OHM, J, 1/10W	1	PAVCCZ
		R7411	D0GB222JA065	M 2K2 OHM, J, 1/10W	1	PAVCCZ
		R7413	D0GB473JA065	M 47K OHM, J, 1/10W	1	PAVCCZ
		R7414	D0GB104JA065	M 100K OHM, J, 1/10W	1	PAVCCZ
		R7415	D0GB103JA065	M 10K OHM, J, 1/10W	1	PAVCCZ
		R7419	D0GB103JA065	M 10K OHM, J, 1/10W	1	PAVCCZ
		R7420	D0GB334JA065	M 330K OHM, J, 1/10W	1	PAVCCZ

Change	Safety	Ref. No.	Part No.	Part Name & Description	Q'ty	Remarks
		R7421	D0GB103JA065	M 10K OHM, J, 1/10W	1	PAVCCZ
		R7422	D0GB393JA065	M 39K OHM, J, 1/10W	1	PAVCCZ
		R7423	D0GB103JA065	M 10K OHM, J, 1/10W	1	PAVCCZ
		R7424	D0GB103JA065	M 10K OHM, J, 1/10W	1	PAVCCZ
		R7425	D0GB103JA065	M 10K OHM, J, 1/10W	1	PAVCCZ
		R7426	D0GB103JA065	M 10K OHM, J, 1/10W	1	PAVCCZ
		R7427	D0GZ2R2JA020	M 2R2 OHM, J, 1/2W	1	PAVCCZ
		R7428	D0GB393JA065	M 39K OHM, J, 1/10W	1	PAVCCZ
		R7429	D0GD220JA059	M 22 OHM, J, 1/4W	1	PAVCCZ
		R7432	D0GB100JA065	M 10 OHM, J, 1/10W	1	PAVCCZ
		R7491	D0GB100JA065	M 10 OHM, J, 1/10W	1	PAVCCZ
		R7492	D0GB100JA065	M 10 OHM, J, 1/10W	1	PAVCCZ
		R7493	D0GB243JA065	M 24K OHM, J, 1/10W	1	PAVCCZ
		R7494	D1BB3602A073	M 36K OHM, F, 1/10W	1	PAVCCZ
		R7495	D1BB2003A073	M 200K OHM, F, 1/10W	1	PAVCCZ
		R7800	D1BB1202A073	M 12K OHM, F, 1/10W	1	PAVCCZ
		R7801	D0GBR00J0004	M 0 OHM, J, 1/10W	1	PAVCCZ
		R7802	D0GBR00J0004	M 0 OHM, J, 1/10W	1	PAVCCZ
		R7803	D0GBR00J0004	M 0 OHM, J, 1/10W	1	PAVCCZ
		R7804	D0GBR00J0004	M 0 OHM, J, 1/10W	1	PAVCCZ
		R7805	D0GBR00J0004	M 0 OHM, J, 1/10W	1	PAVCCZ
		R7806	D0GBR00J0004	M 0 OHM, J, 1/10W	1	PAVCCZ
		R7807	D0GBR00J0004	M 0 OHM, J, 1/10W	1	PAVCCZ
		R7808	D0GBR00J0004	M 0 OHM, J, 1/10W	1	PAVCCZ
		R7811	D1BB3302A073	M 33K OHM, J, 1/10W	1	PAVCCZ
		R7812	D1BB1802A073	M 18K OHM, F, 1/10W	1	PAVCCZ
		R7813	D1BB8201A073	M 8K2 OHM, F, 1/10W	1	PAVCCZ
		R7814	D0GB472JA065	M 4K7 OHM, J, 1/10W	1	PAVCCZ
		R7815	D1BB1003A073	M 100K OHM, F, 1/10W	1	PAVCCZ
		R7816	D0GB473JA065	M 47K OHM, J, 1/10W	1	PAVCCZ
		R7817	D0GB103JA065	M 10K OHM, J, 1/10W	1	PAVCCZ
		R7818	D0GB470JA065	M 47 OHM, J, 1/10W	1	PAVCCZ
		R7819	D0GB470JA065	M 47 OHM, J, 1/10W	1	PAVCCZ
		R7820	D0GB104JA065	M 100K OHM, J, 1/10W	1	PAVCCZ
		R7821	D0GB100JA065	M 10 OHM, J, 1/10W	1	PAVCCZ
		R7822	D0GB100JA065	M 10 OHM, J, 1/10W	1	PAVCCZ
		R7823	D0GB100JA065	M 10 OHM, J, 1/10W	1	PAVCCZ
		R7824	D0GB100JA065	M 10 OHM, J, 1/10W	1	PAVCCZ
		R7825	D0GB100JA065	M 10 OHM, J, 1/10W	1	PAVCCZ
		R7826	D0GB100JA065	M 10 OHM, J, 1/10W	1	PAVCCZ
		R7827	D0GB100JA065	M 10 OHM, J, 1/10W	1	PAVCCZ
		R7828	D0GB100JA065	M 10 OHM, J, 1/10W	1	PAVCCZ
		R7830	D0GD2R2JA052	M 2R2 OHM, J, 1/8W	1	PAVCCZ
		R7831	D0GB103JA065	M 10K OHM, J, 1/10W	1	PAVCCZ
		R7832	D0GB473JA065	M 47K OHM, J, 1/10W	1	PAVCCZ
		R7833	D0GB223JA065	M 22K OHM, J, 1/10W	1	PAVCCZ
		R7834	D0GB223JA065	M 22K OHM, J, 1/10W	1	PAVCCZ
		R7835	ERG2SJ103V	M 10K OHM, J, 2W	1	PAVCCZ
		R7836	D1BB1803A073	M 180K OHM, F, 1/10W	1	PAVCCZ
		R7837	D1BB1803A073	M 180K OHM, F, 1/10W	1	PAVCCZ
		R7838	D1BB1503A073	M 150K OHM, F, 1/10W	1	PAVCCZ
		R7839	D1BB1503A073	M 150K OHM, F, 1/10W	1	PAVCCZ
		R7840	D0GB104JA065	M 100K OHM, J, 1/10W	1	PAVCCZ
		R7841	D0GB103JA065	M 10K OHM, J, 1/10W	1	PAVCCZ
		R7842	D0GB473JA065	M 47K OHM, J, 1/10W	1	PAVCCZ
		R7843	D0GB473JA065	M 47K OHM, J, 1/10W	1	PAVCCZ
		R7844	D0GB101JA065	M 100 OHM, J, 1/10W	1	PAVCCZ
		R7845	D0GB393JA065	M 39K OHM, J, 1/10W	1	PAVCCZ
		R7846	D0GD104JA052	M 100K OHM, J, 1/8W	1	PAVCCZ
		R7847	D0GB393JA065	M 39K OHM, J, 1/10W	1	PAVCCZ
		R7848	D0GD104JA052	M 100K OHM, J, 1/8W	1	PAVCCZ
		R7849	D0GB103JA065	M 10K OHM, J, 1/10W	1	PAVCCZ

Change	Safety	Ref. No.	Part No.	Part Name & Description	Q'ty	Remarks
		R7851	D0GFR22JA020	M R22 OHM, J, 1/4W	1	PAVCCZ
		R7853	D0GFR22JA020	M R22 OHM, J, 1/4W	1	PAVCCZ
		R7855	D0GFR22JA020	M R22 OHM, J, 1/4W	1	PAVCCZ
		R7856	D0GB103JA065	M 10K OHM, J, 1/10W	1	PAVCCZ
		R7857	D0GD100JA059	M 10 OHM, J, 1/4W	1	PAVCCZ
		R7858	D0GD220JA059	M 22 OHM, J, 1/4W	1	PAVCCZ
		R7859	D0GB104JA065	M 100K OHM, J, 1/10W	1	PAVCCZ
		R7860	D0GD224JA052	M 220K OHM, J, 1/8W	1	PAVCCZ
		R7861	D0GD224JA052	M 220K OHM, J, 1/8W	1	PAVCCZ
		R7862	D0GD224JA052	M 220K OHM, J, 1/8W	1	PAVCCZ
		R7863	D0GB473JA065	M 47K OHM, J, 1/10W	1	PAVCCZ
		R7864	D0GB223JA065	M 22K OHM, J, 1/10W	1	PAVCCZ
		R7865	D0GB223JA065	M 22K OHM, J, 1/10W	1	PAVCCZ
		R7866	D0GB100JA065	M 10 OHM, J, 1/10W	1	PAVCCZ
		R7867	D0GB100JA065	M 10 OHM, J, 1/10W	1	PAVCCZ
		R7868	D0GB100JA065	M 10 OHM, J, 1/10W	1	PAVCCZ
		R7869	D0GB470JA065	M 47 OHM, J, 1/10W	1	PAVCCZ
		R7870	D0GB100JA065	M 10 OHM, J, 1/10W	1	PAVCCZ
		R7871	D0GB470JA065	M 47 OHM, J, 1/10W	1	PAVCCZ
		R7875	D0GB470JA065	M 47 OHM, J, 1/10W	1	PAVCCZ
		R7879	D0GB470JA065	M 47 OHM, J, 1/10W	1	PAVCCZ
		R7881	D0GB103JA065	M 10K OHM, J, 1/10W	1	PAVCCZ
		R7882	D0GB103JA065	M 10K OHM, J, 1/10W	1	PAVCCZ
		R7883	D0GB103JA065	M 10K OHM, J, 1/10W	1	PAVCCZ
		R7884	D0GB103JA065	M 10K OHM, J, 1/10W	1	PAVCCZ
		R7885	D0GB103JA065	M 10K OHM, J, 1/10W	1	PAVCCZ
		R7886	D0GB103JA065	M 10K OHM, J, 1/10W	1	PAVCCZ
		R7887	D0GB103JA065	M 10K OHM, J, 1/10W	1	PAVCCZ
		R7888	D0GB103JA065	M 10K OHM, J, 1/10W	1	PAVCCZ
		R7891	D1BF4R70A073	M 4R7 OHM, F, 1/4W	1	PAVCCZ
		R7892	D1BF4R70A073	M 4R7 OHM, F, 1/4W	1	PAVCCZ
		R7893	D1BF4R70A073	M 4R7 OHM, F, 1/4W	1	PAVCCZ
		R7894	D1BF4R70A073	M 4R7 OHM, F, 1/4W	1	PAVCCZ
		R7895	D1BF4R70A073	M 4R7 OHM, F, 1/4W	1	PAVCCZ
		R7896	D1BF4R70A073	M 4R7 OHM, F, 1/4W	1	PAVCCZ
		R7897	D1BF4R70A073	M 4R7 OHM, F, 1/4W	1	PAVCCZ
		R7898	D1BF4R70A073	M 4R7 OHM, F, 1/4W	1	PAVCCZ
		R7901	D0GB106JA065	M 10M OHM, J, 1/10W	1	PAVCCZ
		R7902	D0GB106JA065	M 10M OHM, J, 1/10W	1	PAVCCZ
		R7903	D0GB106JA065	M 10M OHM, J, 1/10W	1	PAVCCZ
		R7904	D0GB106JA065	M 10M OHM, J, 1/10W	1	PAVCCZ
		R7905	D0GB106JA065	M 10M OHM, J, 1/10W	1	PAVCCZ
		R7906	D0GB106JA065	M 10M OHM, J, 1/10W	1	PAVCCZ
		R7907	D0GB106JA065	M 10M OHM, J, 1/10W	1	PAVCCZ
		R7908	D0GB106JA065	M 10M OHM, J, 1/10W	1	PAVCCZ
		R7909	D0GD104JA052	M 100K OHM, J, 1/8W	1	PAVCCZ
		R7910	D0GD104JA052	M 100K OHM, J, 1/8W	1	PAVCCZ
		R8000	D0GAR00JA039	M 0 OHM, J, 1/16W	1	PAVCCZ
		R8002	D0GAR00JA039	M 0 OHM, J, 1/16W	1	PAVCCZ
		R8003	D0GAR00JA039	M 0 OHM, J, 1/16W	1	PAVCCZ
		R8004	D0GAR00JA039	M 0 OHM, J, 1/16W	1	PAVCCZ
		R8005	D0GAR00JA039	M 0 OHM, J, 1/16W	1	PAVCCZ
		R8006	D0GAR00JA039	M 0 OHM, J, 1/16W	1	PAVCCZ
		R8007	D0GAR00JA039	M 0 OHM, J, 1/16W	1	PAVCCZ
		R8008	D0GDR00J0004	M 0 OHM, J, 1/8W	1	PAVCCZ
		R8009	D0GAR00JA039	M 0 OHM, J, 1/16W	1	PAVCCZ
		R8202	D0GAR00JA039	M 0 OHM, J, 1/16W	1	PAVCCZ
		R8204	D1BA1242A023	M 12K4 OHM, F, 1/16W	1	PAVCCZ
		R8205	D1BA1802A023	M 18K OHM, F, 1/16W	1	PAVCCZ
		R8208	D0GAR00JA039	M 0 OHM, J, 1/16W	1	PAVCCZ
		R8209	D0GA103JA039	M 10K OHM, J, 1/16W	1	PAVCCZ
		R8210	D0GAR00JA039	M 0 OHM, J, 1/16W	1	PAVCCZ

Change	Safety	Ref. No.	Part No.	Part Name & Description	Q'ty	Remarks
		R8212	D1BA4302A023	M 43K OHM, F, 1/16W	1	PAVCCZ
		R8213	D1BA1272A023	M 12K7 OHM, F, 1/16W	1	PAVCCZ
		R8214	D0GAR00JA039	M 0 OHM, J, 1/16W	1	PAVCCZ
		R8216	D0GAR00JA039	M 0 OHM, J, 1/16W	1	PAVCCZ
		R8217	D0GAR00JA039	M 0 OHM, J, 1/16W	1	PAVCCZ
		R8218	D0GA103JA039	M 10K OHM, J, 1/16W	1	PAVCCZ
		R8219	D1BA1502A023	M 15K OHM, F, 1/16W	1	PAVCCZ
		R8220	D1BA1102A023	M 11K OHM, F, 1/16W	1	PAVCCZ
		R8221	D1BA4702A023	M 47K OHM, F, 1/16W	1	PAVCCZ
		R8222	D1BA2202A023	M 22K OHM, F, 1/16W	1	PAVCCZ
		R8224	D0GA473JA039	M 47K OHM, J, 1/16W	1	PAVCCZ
		R8225	D0GAR00JA039	M 0 OHM, J, 1/16W	1	PAVCCZ
		R8227	D0GBR00J0004	M 0 OHM, J, 1/10W	1	PAVCCZ
		R8228	D0GDR00J0004	M 0 OHM, J, 1/8W	1	PAVCCZ
		R8229	D0GAR00JA039	M 0 OHM, J, 1/16W	1	PAVCCZ
		R8230	D0GAR00JA039	M 0 OHM, J, 1/16W	1	PAVCCZ
		R8232	D0GAR00JA039	M 0 OHM, J, 1/16W	1	PAVCCZ
		R8235	D0GAR00JA039	M 0 OHM, J, 1/16W	1	PAVCCZ
		R8236	D0GAR00JA039	M 0 OHM, J, 1/16W	1	PAVCCZ
		R8237	D0GBR00J0004	M 0 OHM, J, 1/10W	1	PAVCCZ
		R8238	D0GBR00J0004	M 0 OHM, J, 1/10W	1	PAVCCZ
		R8243	D0GAR00JA039	M 0 OHM, J, 1/16W	1	PAVCCZ
		R8401	D1BA1001A023	M 1K OHM, F, 1/16W	1	PAVCCZ
		R8402	D1BA1001A023	M 1K OHM, F, 1/16W	1	PAVCCZ
		R8403	D1BA2400A023	M 240 OHM, F, 1/16W	1	PAVCCZ
		R8404	D0GA103JA039	M 10K OHM, J, 1/16W	1	PAVCCZ
		R8405	D0GA102JA039	M 1K OHM, J, 1/16W	1	PAVCCZ
		R8406	D0GA102JA039	M 1K OHM, J, 1/16W	1	PAVCCZ
		R8407	D1H81214A042	M 120 OHM, J, 1/16W	1	PAVCCZ
		R8408	D1H81214A042	M 120 OHM, J, 1/16W	1	PAVCCZ
		R8409	D1H81214A042	M 120 OHM, J, 1/16W	1	PAVCCZ
		R8410	D1H81214A042	M 120 OHM, J, 1/16W	1	PAVCCZ
		R8411	D0GA121JA039	M 120 OHM, J, 1/16W	1	PAVCCZ
		R8412	D0GA121JA039	M 120 OHM, J, 1/16W	1	PAVCCZ
		R8413	D0GA121JA039	M 120 OHM, J, 1/16W	1	PAVCCZ
		R8414	D0GA121JA039	M 120 OHM, J, 1/16W	1	PAVCCZ
		R8415	D0GA121JA039	M 120 OHM, J, 1/16W	1	PAVCCZ
		R8416	D0GA121JA039	M 120 OHM, J, 1/16W	1	PAVCCZ
		R8418	D1BA1001A023	M 1K OHM, F, 1/16W	1	PAVCCZ
		R8419	D1BA1001A023	M 1K OHM, F, 1/16W	1	PAVCCZ
		R8420	D1BA2400A023	M 240 OHM, F, 1/16W	1	PAVCCZ
		R8421	D0GA103JA039	M 10K OHM, J, 1/16W	1	PAVCCZ
		R8422	D0GA102JA039	M 1K OHM, J, 1/16W	1	PAVCCZ
		R8423	D0GA102JA039	M 1K OHM, J, 1/16W	1	PAVCCZ
		R8424	D1H81214A042	M 120 OHM, J, 1/16W	1	PAVCCZ
		R8425	D1H81214A042	M 120 OHM, J, 1/16W	1	PAVCCZ
		R8426	D1H81214A042	M 120 OHM, J, 1/16W	1	PAVCCZ
		R8427	D1H81214A042	M 120 OHM, J, 1/16W	1	PAVCCZ
		R8428	D0GA121JA039	M 120 OHM, J, 1/16W	1	PAVCCZ
		R8429	D0GA121JA039	M 120 OHM, J, 1/16W	1	PAVCCZ
		R8430	D0GA121JA039	M 120 OHM, J, 1/16W	1	PAVCCZ
		R8431	D0GA121JA039	M 120 OHM, J, 1/16W	1	PAVCCZ
		R8432	D0GA121JA039	M 120 OHM, J, 1/16W	1	PAVCCZ
		R8433	D0GA121JA039	M 120 OHM, J, 1/16W	1	PAVCCZ
		R8435	D1BA1001A023	M 1K OHM, F, 1/16W	1	PAVCCZ
		R8436	D1BA1001A023	M 1K OHM, F, 1/16W	1	PAVCCZ
		R8437	D1BA2400A023	M 240 OHM, F, 1/16W	1	PAVCCZ
		R8438	D0GA103JA039	M 10K OHM, J, 1/16W	1	PAVCCZ
		R8439	D0GA102JA039	M 1K OHM, J, 1/16W	1	PAVCCZ
		R8440	D0GA102JA039	M 1K OHM, J, 1/16W	1	PAVCCZ
		R8441	D1H81214A042	M 120 OHM, J, 1/16W	1	PAVCCZ
		R8442	D1H81214A042	M 120 OHM, J, 1/16W	1	PAVCCZ

Change	Safety	Ref. No.	Part No.	Part Name & Description	Q'ty	Remarks
		R8443	D1H81214A042	M 120 OHM, J, 1/16W	1	PAVCCZ
		R8444	D1H81214A042	M 120 OHM, J, 1/16W	1	PAVCCZ
		R8445	D0GA121JA039	M 120 OHM, J, 1/16W	1	PAVCCZ
		R8446	D0GA121JA039	M 120 OHM, J, 1/16W	1	PAVCCZ
		R8447	D0GA121JA039	M 120 OHM, J, 1/16W	1	PAVCCZ
		R8448	D0GA121JA039	M 120 OHM, J, 1/16W	1	PAVCCZ
		R8449	D0GA121JA039	M 120 OHM, J, 1/16W	1	PAVCCZ
		R8450	D0GA121JA039	M 120 OHM, J, 1/16W	1	PAVCCZ
		R8452	D1BA1001A023	M 1K OHM, F, 1/16W	1	PAVCCZ
		R8453	D1BA1001A023	M 1K OHM, F, 1/16W	1	PAVCCZ
		R8454	D1BA2400A023	M 240 OHM, F, 1/16W	1	PAVCCZ
		R8455	D0GA103JA039	M 10K OHM, J, 1/16W	1	PAVCCZ
		R8456	D0GA102JA039	M 1K OHM, J, 1/16W	1	PAVCCZ
		R8457	D0GA102JA039	M 1K OHM, J, 1/16W	1	PAVCCZ
		R8458	D1H81214A042	M 120 OHM, J, 1/16W	1	PAVCCZ
		R8459	D1H81214A042	M 120 OHM, J, 1/16W	1	PAVCCZ
		R8460	D1H81214A042	M 120 OHM, J, 1/16W	1	PAVCCZ
		R8461	D1H81214A042	M 120 OHM, J, 1/16W	1	PAVCCZ
		R8462	D0GA121JA039	M 120 OHM, J, 1/16W	1	PAVCCZ
		R8463	D0GA121JA039	M 120 OHM, J, 1/16W	1	PAVCCZ
		R8464	D0GA121JA039	M 120 OHM, J, 1/16W	1	PAVCCZ
		R8465	D0GA121JA039	M 120 OHM, J, 1/16W	1	PAVCCZ
		R8466	D0GA121JA039	M 120 OHM, J, 1/16W	1	PAVCCZ
		R8467	D0GA121JA039	M 120 OHM, J, 1/16W	1	PAVCCZ
		R8468	D0GB2R2JA065	M 2R2 OHM, J, 1/10W	1	PAVCCZ
		R8469	D1BA1003A023	M 100K OHM, F, 1/16W	1	PAVCCZ
		R8470	D1BA1003A023	M 100K OHM, F, 1/16W	1	PAVCCZ
		R8472	D0GA103JA039	M 10K OHM, J, 1/16W	1	PAVCCZ
		R8474	D0GA102JA039	M 1K OHM, J, 1/16W	1	PAVCCZ
		R8550	D0GA101JA039	M 100 OHM, J, 1/16W	1	PAVCCZ
		R8551	D1BA4701A023	M 4K7 OHM, F, 1/16W	1	PAVCCZ
		R8553	D1BA47R0A023	M 47 OHM, F, 1/16W	1	PAVCCZ
		R8638	D0GA103JA039	M 10K OHM, J, 1/16W	1	PAVCCZ
		R8640	D0GA103JA039	M 10K OHM, J, 1/16W	1	PAVCCZ
		R8641	D0GA103JA039	M 10K OHM, J, 1/16W	1	PAVCCZ
		R8643	D1H81034A042	M 10K OHM, J, 1/16W	1	PAVCCZ
		R8648	D0GA103JA039	M 10K OHM, J, 1/16W	1	PAVCCZ
		R8691	D0GBR00J0004	M 0 OHM, J, 1/10W	1	PAVCCZ
		R8706	D0GA103JA039	M 10K OHM, J, 1/16W	1	PAVCCZ
		R8707	D1BA2872A023	M 28K7 OHM, F, 1/16W	1	PAVCCZ
		R8708	D1H4R0020006	M 0 OHM, -, -	1	PAVCCZ
		R8710	D0GA103JA039	M 10K OHM, J, 1/16W	1	PAVCCZ
		R8712	D0GAR00JA039	M 0 OHM, J, 1/16W	1	PAVCCZ
		R8713	D0GA103JA039	M 10K OHM, J, 1/16W	1	PAVCCZ
		R8714	D1BA2872A023	M 28K7 OHM, F, 1/16W	1	PAVCCZ
		R8716	D1H4R0020006	M 0 OHM, -, -	1	PAVCCZ
		R8717	D0GA103JA039	M 10K OHM, J, 1/16W	1	PAVCCZ
		R8718	D0GA103JA039	M 10K OHM, J, 1/16W	1	PAVCCZ
		R8719	D1H4R0020006	M 0 OHM, -, -	1	PAVCCZ
		R8720	D1H4R0020006	M 0 OHM, -, -	1	PAVCCZ
		R8721	D1BA1652A023	M 16K5 OHM, F, 1/16W	1	PAVCCZ
		R8722	D1H4R0020006	M 0 OHM, -, -	1	PAVCCZ
		R8726	D0GA103JA039	M 10K OHM, J, 1/16W	1	PAVCCZ
		R8732	D0GA103JA039	M 10K OHM, J, 1/16W	1	PAVCCZ
		R8741	D0GA103JA039	M 10K OHM, J, 1/16W	1	PAVCCZ
		R8742	D0GA103JA039	M 10K OHM, J, 1/16W	1	PAVCCZ
		R8744	D0GA103JA039	M 10K OHM, J, 1/16W	1	PAVCCZ
		R8745	D0GA104JA039	M 100K OHM, J, 1/16W	1	PAVCCZ
		R8746	D0GA103JA039	M 10K OHM, J, 1/16W	1	PAVCCZ
		R8747	D0GA103JA039	M 10K OHM, J, 1/16W	1	PAVCCZ
		R8750	D0GA103JA039	M 10K OHM, J, 1/16W	1	PAVCCZ
		R8751	D1BA6200A023	M 620 OHM, F, 1/16W	1	PAVCCZ

Change	Safety	Ref. No.	Part No.	Part Name & Description	Q'ty	Remarks
		R8754	D0GAR00JA039	M 0 OHM, J, 1/16W	1	PAVCCZ
		R8759	D1BA1652A023	M 16K5 OHM, F, 1/16W	1	PAVCCZ
		R8760	D0GA103JA039	M 10K OHM, J, 1/16W	1	PAVCCZ
		R8763	D1H4R0020006	M 0 OHM, -, -	1	PAVCCZ
		R8765	D0GA680JA039	M 68 OHM, J, 1/16W	1	PAVCCZ
		R8766	D0GA103JA039	M 10K OHM, J, 1/16W	1	PAVCCZ
		R8777	D0GAR00JA039	M 0 OHM, J, 1/16W	1	PAVCCZ
		R8809	D0GA103JA039	M 10K OHM, J, 1/16W	1	PAVCCZ
		R8819	D0GA472JA039	M 4K7 OHM, J, 1/16W	1	PAVCCZ
		R8835	D0GA473JA039	M 47K OHM, J, 1/16W	1	PAVCCZ
		R8836	D0GA473JA039	M 47K OHM, J, 1/16W	1	PAVCCZ
		R8839	D0GA103JA039	M 10K OHM, J, 1/16W	1	PAVCCZ
		R8865	D0GA103JA039	M 10K OHM, J, 1/16W	1	PAVCCZ
		R8872	D0GA103JA039	M 10K OHM, J, 1/16W	1	PAVCCZ
		R8884	D0GA103JA039	M 10K OHM, J, 1/16W	1	PAVCCZ
		R8891	D0GA103JA039	M 10K OHM, J, 1/16W	1	PAVCCZ
		R8893	D0GA103JA039	M 10K OHM, J, 1/16W	1	PAVCCZ
		R8897	D0GA473JA039	M 47K OHM, J, 1/16W	1	PAVCCZ
		R8898	D0GA473JA039	M 47K OHM, J, 1/16W	1	PAVCCZ
		R8901	D0GAR00JA039	M 0 OHM, J, 1/16W	1	PAVCCZ
		R8902	D0GAR00JA039	M 0 OHM, J, 1/16W	1	PAVCCZ
		R8903	D0GAR00JA039	M 0 OHM, J, 1/16W	1	PAVCCZ
		R8907	D0GA473JA039	M 47K OHM, J, 1/16W	1	PAVCCZ
		R8908	D0GAR00JA039	M 0 OHM, J, 1/16W	1	PAVCCZ
		R8910	D0GAR00JA039	M 0 OHM, J, 1/16W	1	PAVCCZ
		R8911	D0GAR00JA039	M 0 OHM, J, 1/16W	1	PAVCCZ
		R8912	D0GAR00JA039	M 0 OHM, J, 1/16W	1	PAVCCZ
		R8913	D0GAR00JA039	M 0 OHM, J, 1/16W	1	PAVCCZ
		R8914	D0GAR00JA039	M 0 OHM, J, 1/16W	1	PAVCCZ
		R8915	D0GAR00JA039	M 0 OHM, J, 1/16W	1	PAVCCZ
		R8916	D0GAR00JA039	M 0 OHM, J, 1/16W	1	PAVCCZ
		R8917	D0GAR00JA039	M 0 OHM, J, 1/16W	1	PAVCCZ
		R8918	D0GAR00JA039	M 0 OHM, J, 1/16W	1	PAVCCZ
		R8919	D0GAR00JA039	M 0 OHM, J, 1/16W	1	PAVCCZ
		R8920	D0GAR00JA039	M 0 OHM, J, 1/16W	1	PAVCCZ
		R8921	D0GAR00JA039	M 0 OHM, J, 1/16W	1	PAVCCZ
		R8922	D0GAR00JA039	M 0 OHM, J, 1/16W	1	PAVCCZ
		R8923	D0GAR00JA039	M 0 OHM, J, 1/16W	1	PAVCCZ
		R8924	D0GAR00JA039	M 0 OHM, J, 1/16W	1	PAVCCZ
		R8925	D0GAR00JA039	M 0 OHM, J, 1/16W	1	PAVCCZ
		R8926	D0GA473JA039	M 47K OHM, J, 1/16W	1	PAVCCZ
		R8929	D0GAR00JA039	M 0 OHM, J, 1/16W	1	PAVCCZ
		R8930	D0GA103JA039	M 10K OHM, J, 1/16W	1	PAVCCZ
		R8931	D0GA473JA039	M 47K OHM, J, 1/16W	1	PAVCCZ
		R8939	D0GAR00JA039	M 0 OHM, J, 1/16W	1	PAVCCZ
		R8940	D1H81034A042	M 10K OHM, J, 1/16W	1	PAVCCZ
		R8941	D0GA220JA039	M 22 OHM, J, 1/16W	1	PAVCCZ
		R8942	D0GA220JA039	M 22 OHM, J, 1/16W	1	PAVCCZ
		R8943	D0GA220JA039	M 22 OHM, J, 1/16W	1	PAVCCZ
		R8944	D0GA220JA039	M 22 OHM, J, 1/16W	1	PAVCCZ
		R8945	D0GA220JA039	M 22 OHM, J, 1/16W	1	PAVCCZ
		R8949	D0GA103JA039	M 10K OHM, J, 1/16W	1	PAVCCZ
		RM2800	B3RBB0000026	IR RECEIVER	1	PAVCCZ
		SN2800	B3JB00000223	IC AI SENSOR	1	PAVCCZ
		SW2851	EVQ11G05R	LIGHT TOUCH SWITCH	1	PAVCCZ
		SW2852	EVQ11G05R	LIGHT TOUCH SWITCH	1	PAVCCZ
		SW2853	EVQ11G05R	LIGHT TOUCH SWITCH	1	PAVCCZ
		SW2854	EVQ11G05R	LIGHT TOUCH SWITCH	1	PAVCCZ
		SW2855	EVQ11G05R	LIGHT TOUCH SWITCH	1	PAVCCZ

Model No. : TX-49GXW904 Parts List

Change	Safety	Ref. No.	Part No.	Part Name & Description	Q'ty	Remarks
		SW2857	EVQ11G05R	LIGHT TOUCH SWITCH	1	PAVCCZ
		T7201	G4DYA0000496	TRANSFORMER	1	PAVCCZ
	⚠	T7301	G4DYA0000844	TRANSFORMER	1	PAVCCZ
	⚠	TU6708	J3ACZAC00005	TUNER A/DVB-T/T2/C/S DUAL	1	PAVCCZ
		X6804	H0J240500106	CRYSTAL 24MHZ	1	PAVCCZ
		X8551	H0J240500106	CRYSTAL 24MHZ	1	PAVCCZ
		X8701	H0J120500077	CRYSTAL 12MHZ	1	PAVCCZ
		ZA0102	K4AD01D00028	TERMINAL	1	PAVCCZ
		ZA0105	K4AD01D00028	TERMINAL	1	PAVCCZ
		ZA0107	K4AD01D00028	TERMINAL	1	PAVCCZ
		ZA0108	K4AD01D00028	TERMINAL	1	PAVCCZ
		ZA0113	K4AD01D00028	TERMINAL	1	PAVCCZ
		ZA0114	K4AD01D00028	TERMINAL	1	PAVCCZ
		ZA0115	K4AD01D00028	TERMINAL	1	PAVCCZ
		ZA0116	K4AD01D00028	TERMINAL	1	PAVCCZ
		ZA0119	K4AD01D00028	TERMINAL	1	PAVCCZ
		ZA0120	K4AD01D00028	TERMINAL	1	PAVCCZ
		ZA0122	K4AD01D00028	TERMINAL	1	PAVCCZ
		ZA0124	K4AD01D00028	TERMINAL	1	PAVCCZ
		ZA0125	K4AD01D00028	TERMINAL	1	PAVCCZ
		ZA0133	K4AD01D00028	TERMINAL	1	PAVCCZ
		ZA0134	K4AD01D00028	TERMINAL	1	PAVCCZ
		ZA0139	K4AD01D00028	TERMINAL	1	PAVCCZ
		ZA0504	K4AD01D00028	TERMINAL	1	PAVCCZ
		ZA0520	K4AD01D00028	TERMINAL	1	PAVCCZ
		ZA7101	K4AD01A00004	TERMINAL	1	PAVCCZ
		ZA7103	K4AD01A00004	TERMINAL	1	PAVCCZ
		ZA7104	K4AD01A00004	TERMINAL	1	PAVCCZ

PL300000P

Schematic Diagrams Note

IMPORTANT SAFETY NOTICE

Components identified by ⚠ mark have special characteristics important for safety. When replacing any of these components, use only manufacturers' specified parts.

NOTE

1. RESISTOR
   All resistors are carbon ¼W resistor, unless marked otherwise.
   Unit of resistance is OHM (Ω) (k=1,000, M=1,000,000)
2. CAPACITORS
   All capacitors are ceramic 50V unless marked otherwise.
   Unit of capacitance is μF unless otherwise stated.
3. COIL
   Unit of inductance is μH, unless otherwise stated.
4. TEST POINT

Test Point Position

5. EARTH SYMBOL

Chassis Earth (Cold)

Line Earth (Hot)

6. VOLTAGE MEASUREMENT
   Voltage is measured by a D.C. voltmeter.
   Measurement conditions are as follows:

Power source	220V-240V AC, 50/60 Hz
Receiving Signal	Colour Bar signal (RF)
All customer controls	Maximum position

7.

Indicates the Video signal path

Indicates the Audio signal path

These schematic diagrams are the latest at time of printing and are subject to change without notice.

REMARKS

a. Do not touch the hot part, or the hot and cold parts at the same time, as you are liable to a shock hazard.

b. Do not short circuit the hot and cold circuits as electrical components may be damaged.

c. Do not connect an instrument, such as an oscilloscope, to the hot and cold circuits simultaneously as this may cause fuse failure. Connect the earth of the instruments to the earth connection of the circuit being measured.

d. Make sure to disconnect the power plug before removing the chassis.

NOTE

1. The Power Supply Circuit contains a circuit area, which uses a separate power supply to isolate the earth connection. The circuit is defined by HOT and COLD indications in the schematic diagram. All circuits, except the Power Circuit, are COLD.

A-BOARD (1/26)

IIC_BUS

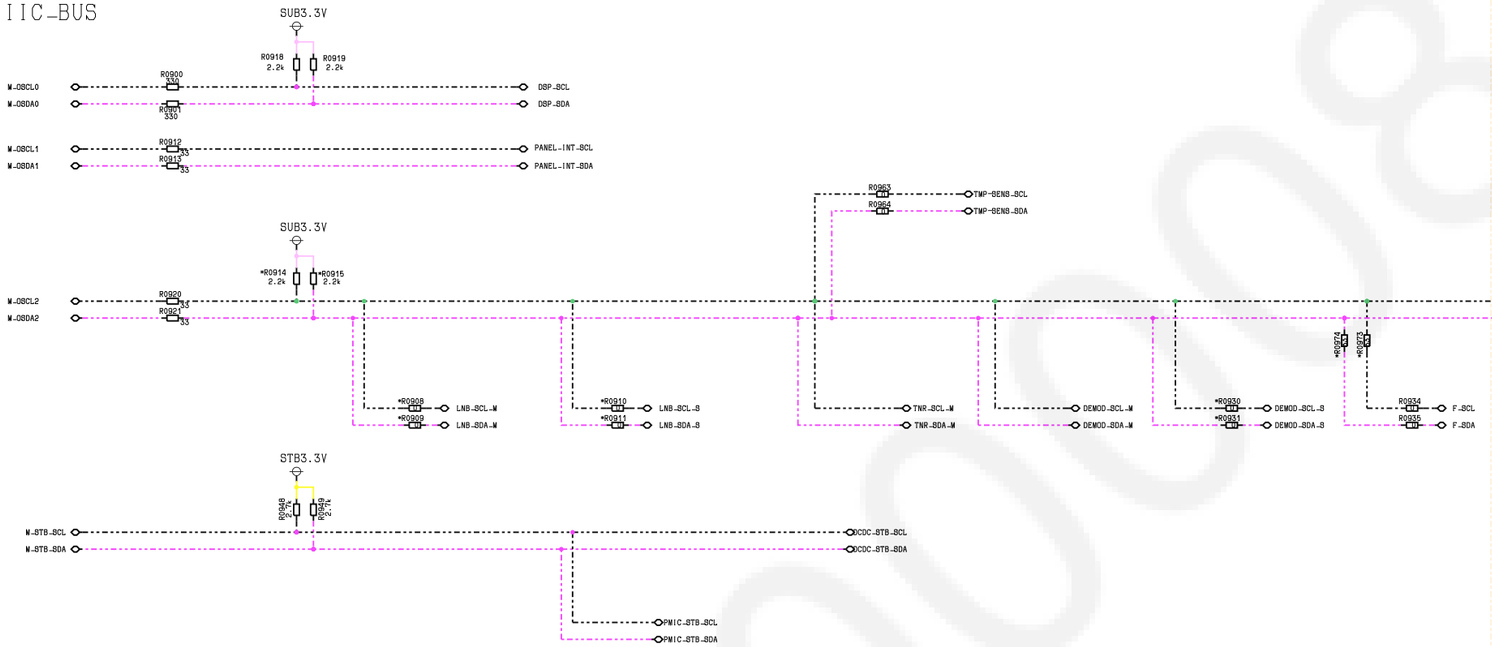

ADJUST_DEVELOP

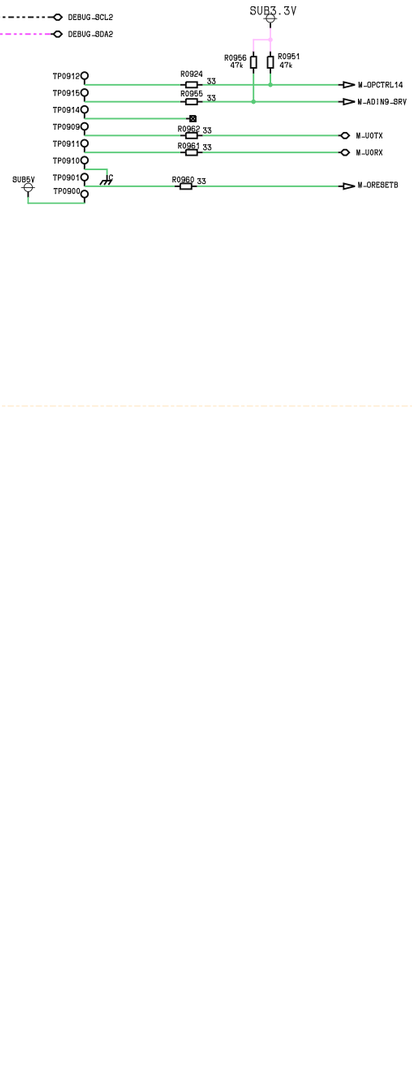

CLIP_LAY1

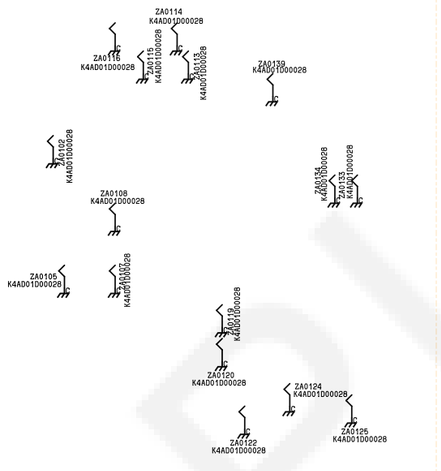

CLIP_LAY4

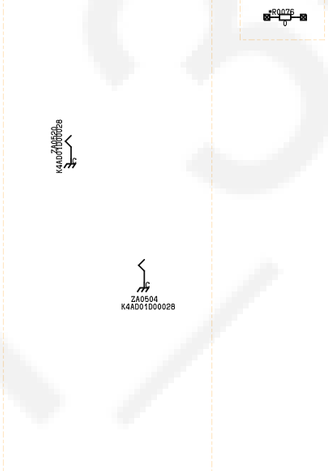

A-BOARD (2/26)

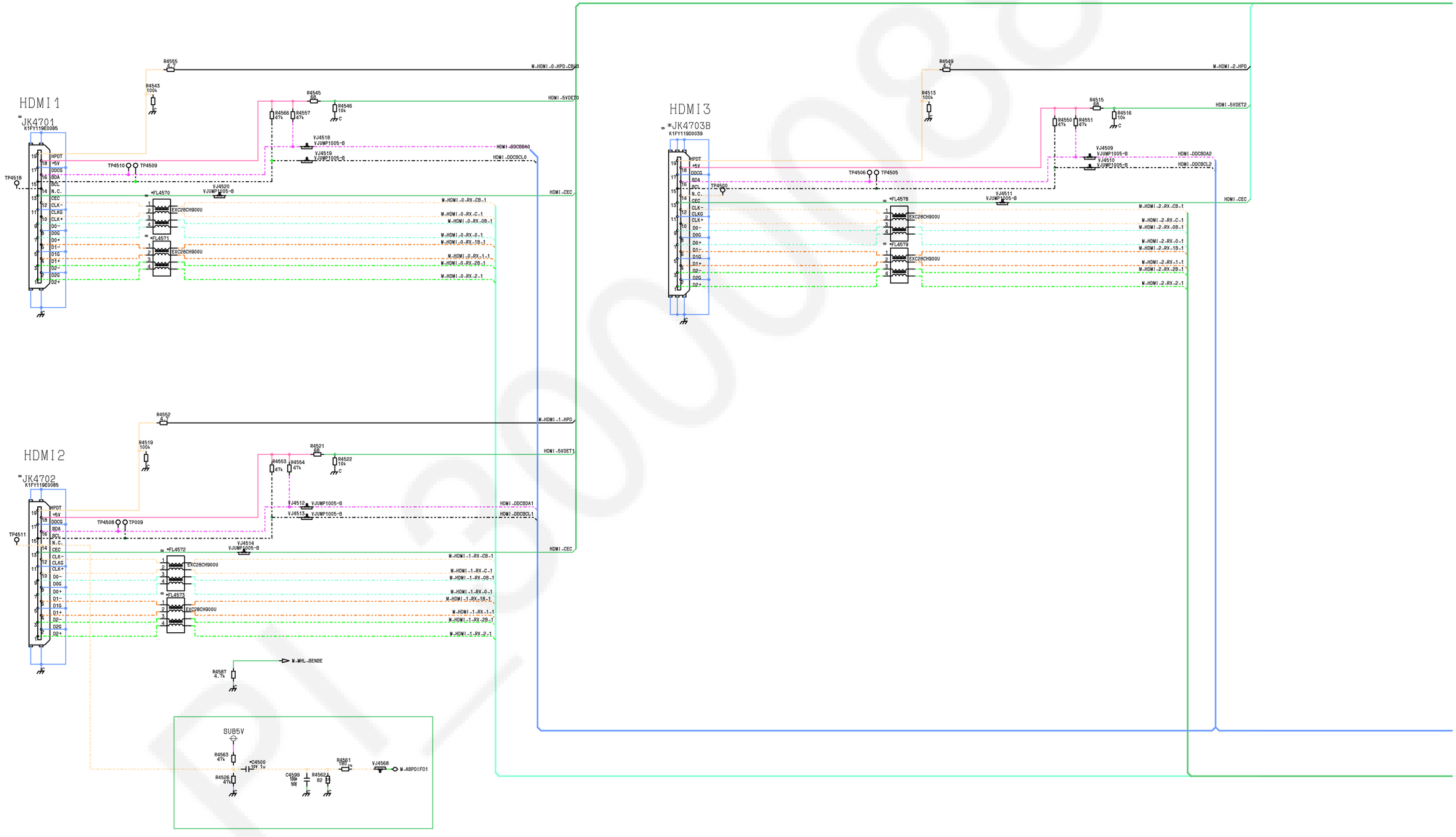
HDMI1
*JK4701
K1FY119E0085
HPDT
+5V
DDCG
SDA
SCL
N.C.
CEC
CLK-
CLKG
CLK+
D0-
D0G
D0+
D1-
D1G
D1+
D2-
D2G
D2+
TP4510
TP4509
TP4518
R4555 4.7
R4543 100k
R4545 68
R4566 47k
R4557 47k
R4546 10k
VJ4518 VJUMP1005-B
VJ4519 VJUMP1005-B
VJ4520 VJUMP1005-B
*FL4570
*FL4571
EXC28CH900U
M-HDMI-0-HPD-CBUS
HDMI-5VDET0
HDMI-DDCSDA0
HDMI-DDCSCL0
HDMI-CEC
M-HDMI-0-RX-CB-1
M-HDMI-0-RX-C-1
M-HDMI-0-RX-0B-1
M-HDMI-0-RX-0-1
M-HDMI-0-RX-1B-1
M-HDMI-0-RX-1-1
M-HDMI-0-RX-2B-1
M-HDMI-0-RX-2-1
HDMI3
*JK4703B
K1FY119D0039
TP4506
TP4505
TP4500
R4549 4.7
R4513 100k
R4515 68
R4550 47k
R4551 47k
R4516 10k
VJ4509 VJUMP1005-B
VJ4510 VJUMP1005-B
VJ4511 VJUMP1005-B
*FL4578
*FL4579
M-HDMI-2-HPD
HDMI-5VDET2
HDMI-DDCSDA2
HDMI-DDCSCL2
M-HDMI-2-RX-CB-1
M-HDMI-2-RX-C-1
M-HDMI-2-RX-0B-1
M-HDMI-2-RX-0-1
M-HDMI-2-RX-1B-1
M-HDMI-2-RX-1-1
M-HDMI-2-RX-2B-1
M-HDMI-2-RX-2-1
HDMI2
*JK4702
K1FY119E0086
TP4508
TP009
TP4511
R4552 4.7
R4519 100k
R4521 68
R4553 47k
R4554 47k
R4522 10k
VJ4512 VJUMP1005-B
VJ4513 VJUMP1005-B
VJ4514 VJUMP1005-B
*FL4572
*FL4573
M-HDMI-1-HPD
HDMI-5VDET1
HDMI-DDCSDA1
HDMI-DDCSCL1
M-HDMI-1-RX-CB-1
M-HDMI-1-RX-C-1
M-HDMI-1-RX-0B-1
M-HDMI-1-RX-0-1
M-HDMI-1-RX-1B-1
M-HDMI-1-RX-1-1
M-HDMI-1-RX-2B-1
M-HDMI-1-RX-2-1
R4587 4.7k
M-MHL-SENSE
SUB5V
R4563 47k
*C4500 10V 1u
R4526 47k
C4599 100p 50V
R4562 82
R4561 180 1%
VJ4568
M-ASPDIFO1
HDMI-CEC

A-BOARD (3/26)

HDMI3.3V

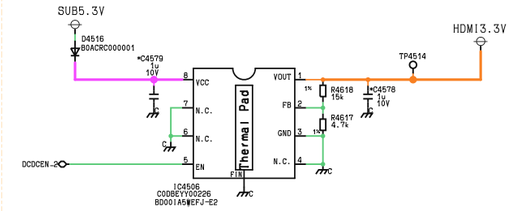

A-BOARD (4/26)

H-PRINT

COMPONENT IN

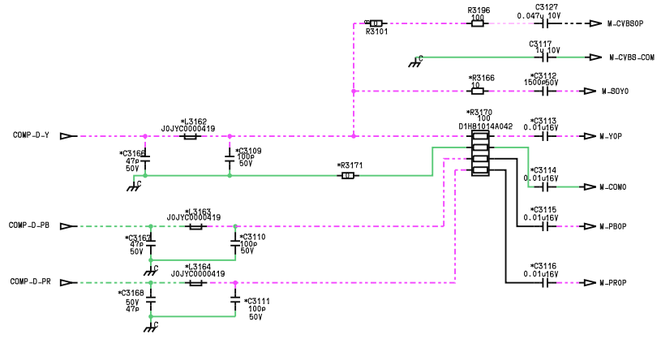

AUDIO OUT

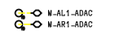

DET

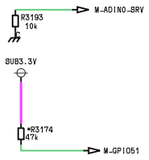

HP OUT

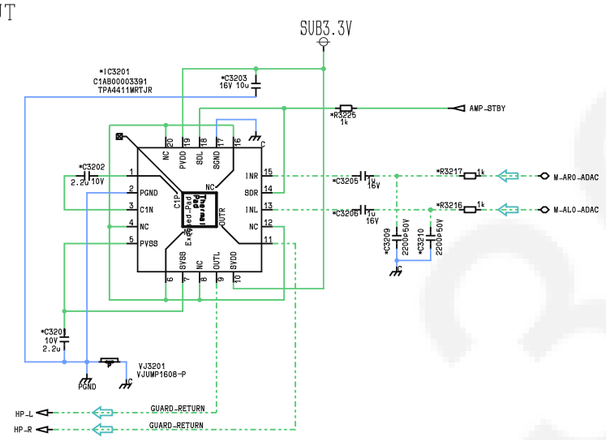

CVBS OUT

AUDIO IN

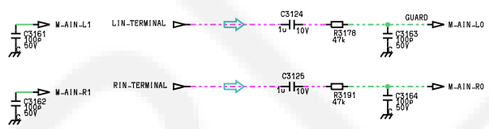

TERMINAL

YUV-V-A-IN

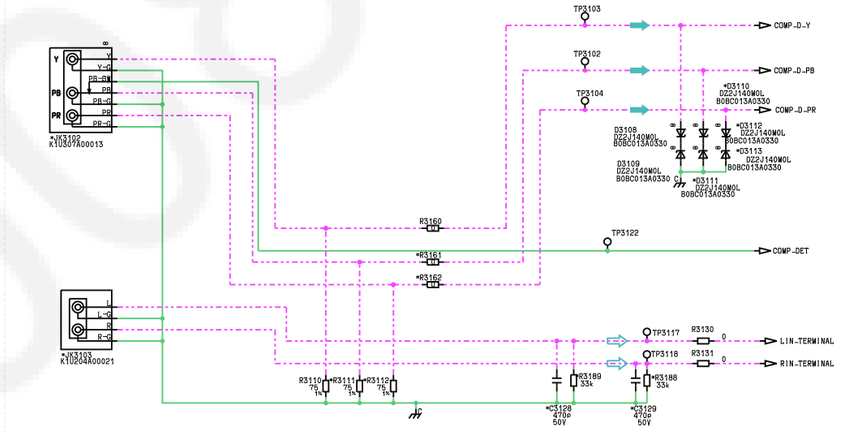

OPT

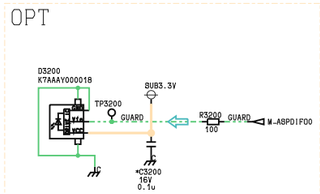

HP EU

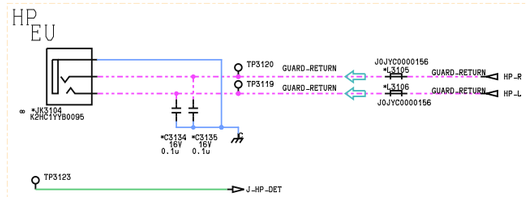

A B C D E F G H I J K L M N O P Q

1 2 3 4 5 6 7 8 9 10 11 12

⚠ A-BOARD (5/26)

PIN_STRAPPING

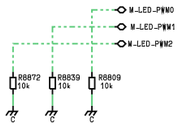

UP_DEBUG_SERIAL

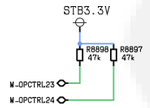

PIN_TERMINATION

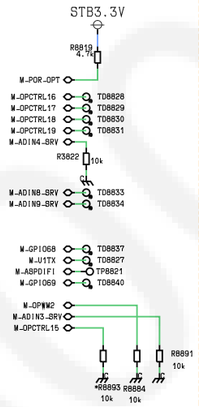

JTAG

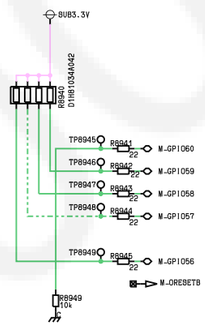

DEBUG_SERIAL

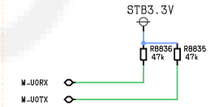

DEBUG_I2C2

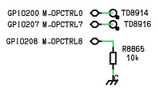

PL3008084

A-BOARD (6/26)

MX03-FPGA

IC6400
C1ZBZ006108

CONFIG/JTAG

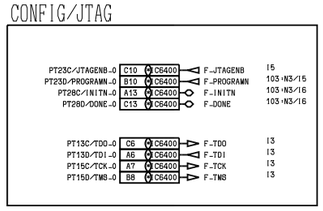

Clock/Intr/Reset

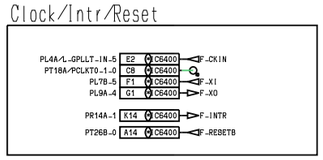

SPI

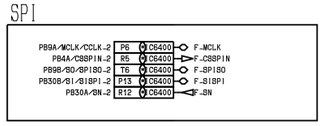

CI Controll to/from SoC

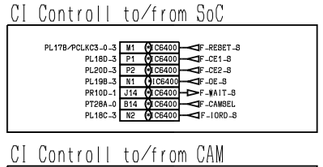

CI Controll to/from CAM

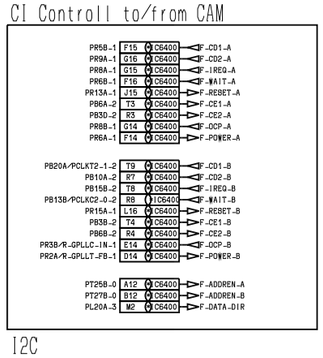

I2C

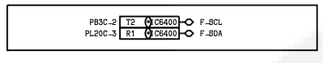

Serial TS

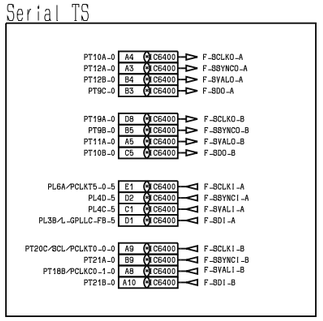

Parallel TS Input

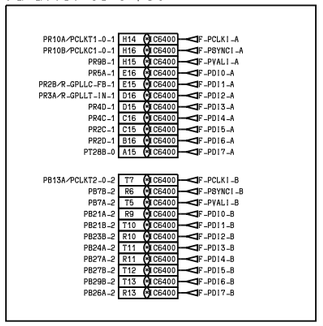

Parallel TS Output

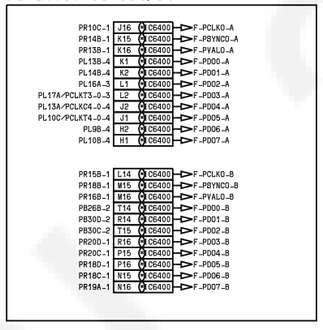

Address Input

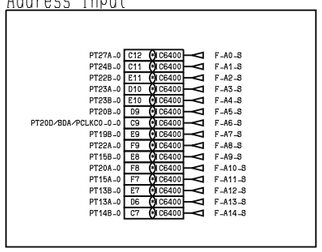

Address Output

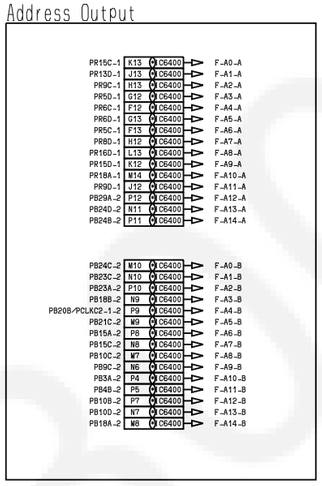

Debug

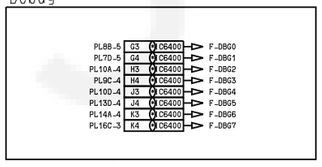

Peripheral

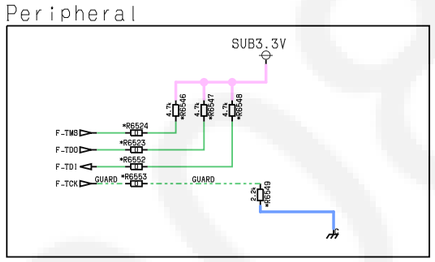

Peripheral Pin Termination

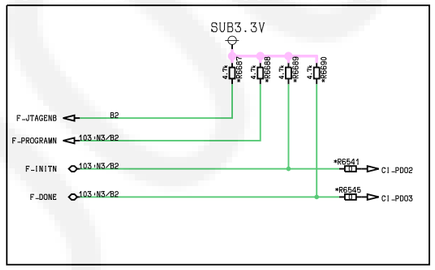

Peripheral

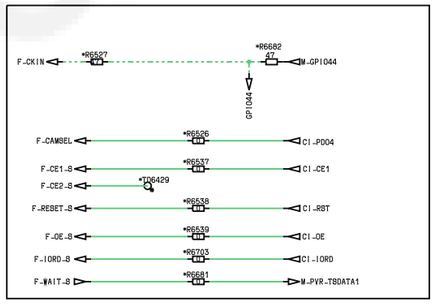

Address : SoC to FPGA

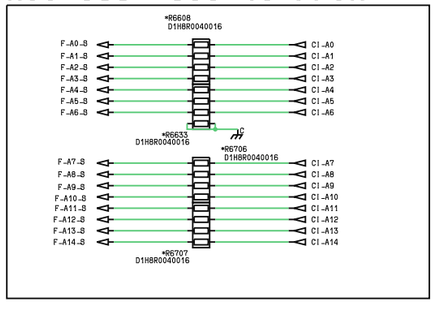

SUB3.3V

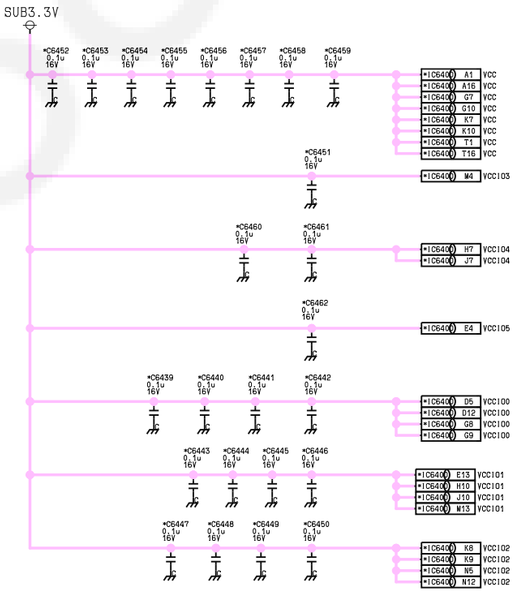

NC

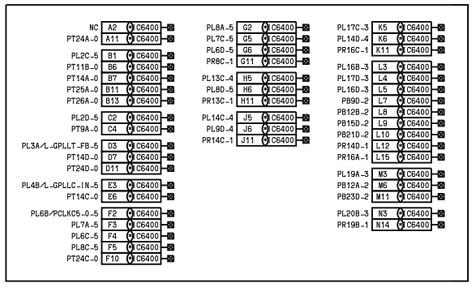

GND

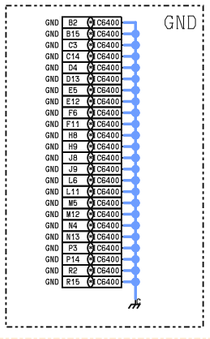

A-BOARD (7/26)

CI-MAX-TS

Main-TS_OUT

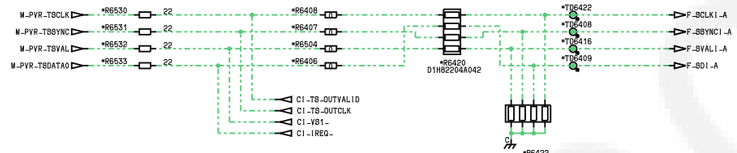

Sub-TS_OUT

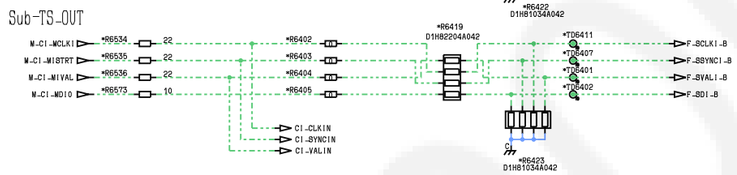

Main-TS_IN

Sub-TS_IN

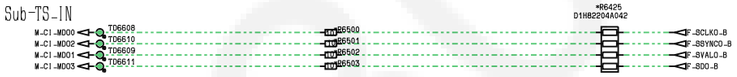

CI-MAX-BPI

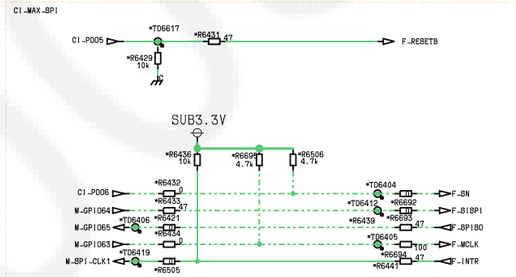

DEBUG_PIN

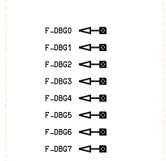

SPI FLASH

CI-MAX-XTAL

⚠ A-BOARD (8/26)

CI-1ST

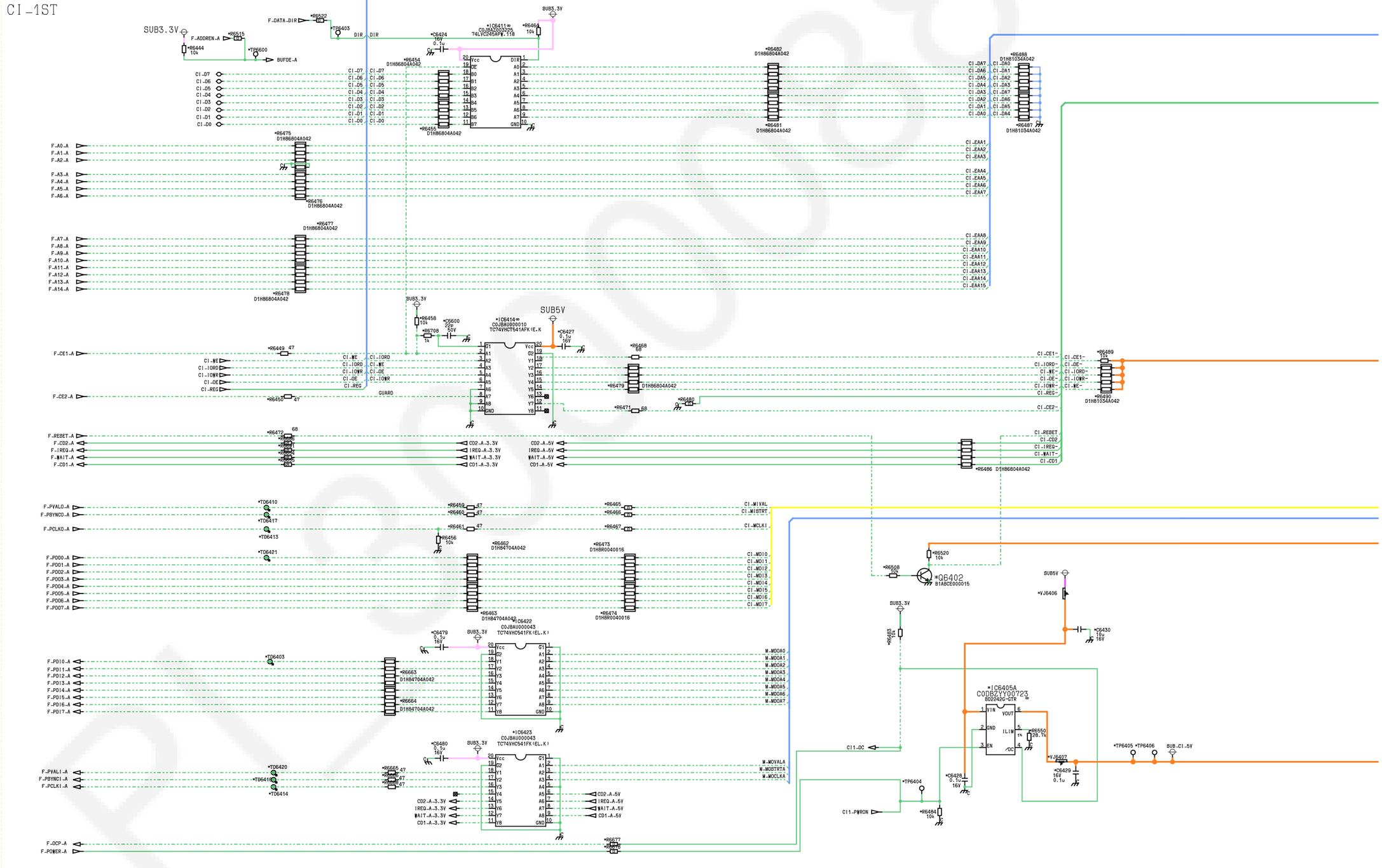

A-BOARD (9/26)

CI SLOT

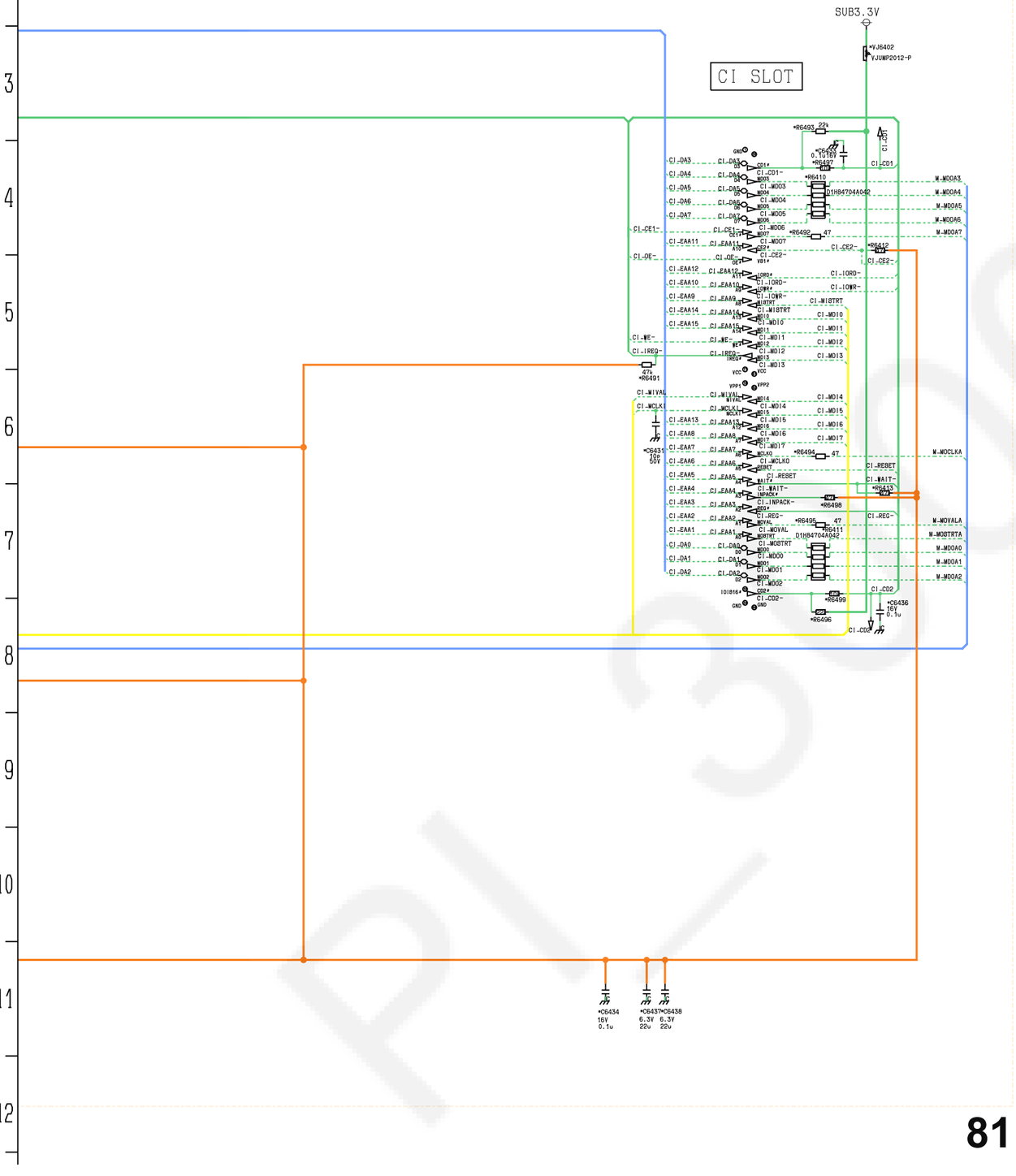

CI CONNECTOR

CIX2

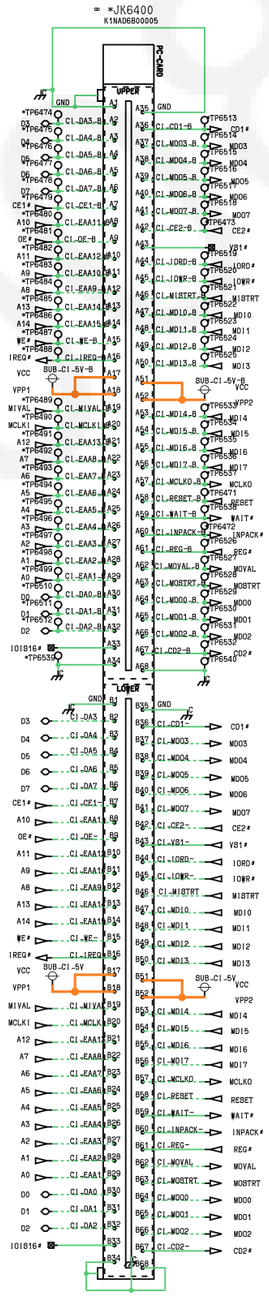

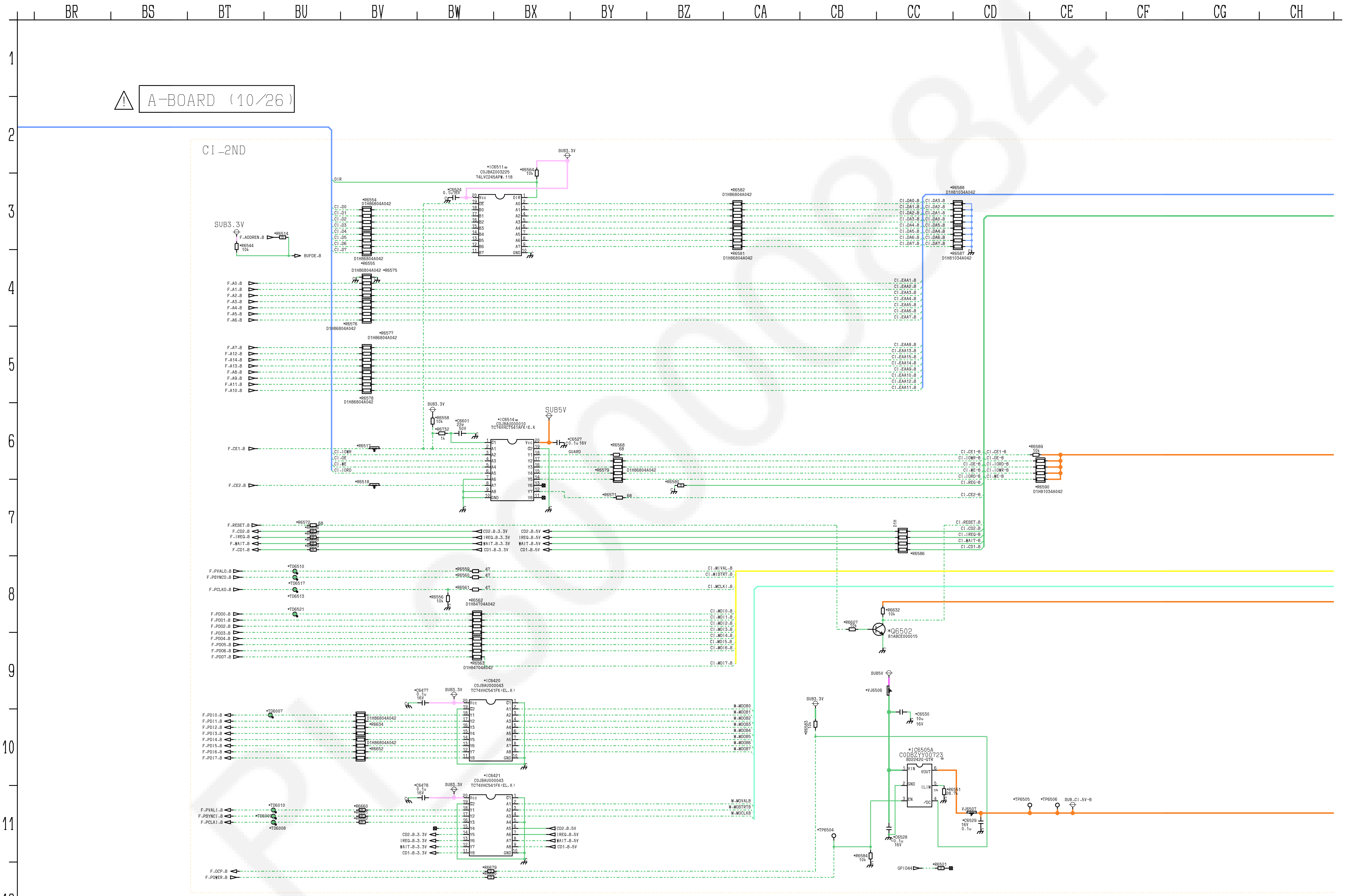
A-BOARD (10/26)
CI_2ND
BR BS BT BU BV BW BX BY BZ CA CB CC CD CE CF CG CH
SUB3.3V
F_ADDREN_B
*R6514
*R6544 10k
BUFOE_B
DIR
CI_D0
CI_D1
CI_D2
CI_D3
CI_D4
CI_D5
CI_D6
CI_D7
*R6554 D1H86804A042
D1H86804A042 *R6555
*IC6511 C0JBAZ003225 74LVC245APW.118
*R6564 10k
*C6524 0.1u16V
*R6582 D1H86804A042
*R6581 D1H86804A042
*R6588 D1H81034A042
*R6587 D1H81034A042
CI_DA0_B
CI_DA1_B
CI_DA2_B
CI_DA3_B
CI_DA4_B
CI_DA5_B
CI_DA6_B
CI_DA7_B
D1H86804A042 *R6575
*R6576 D1H86804A042
F_A0_B
F_A1_B
F_A2_B
F_A3_B
F_A4_B
F_A5_B
F_A6_B
CI_EAA1_B
CI_EAA2_B
CI_EAA3_B
CI_EAA4_B
CI_EAA5_B
CI_EAA6_B
CI_EAA7_B
*R6577 D1H86804A042
*R6578 D1H86804A042
F_A7_B
F_A12_B
F_A14_B
F_A13_B
F_A8_B
F_A9_B
F_A11_B
F_A10_B
CI_EAA8_B
CI_EAA13_B
CI_EAA15_B
CI_EAA14_B
CI_EAA9_B
CI_EAA10_B
CI_EAA12_B
CI_EAA11_B
*R6558 10k
*R6732 1k
*C6601 22p 50V
*IC6514 C0JBAU000010 TC74VHCT541AFK(E.K
SUB5V
*C6527 0.1u 16V
GUARD
*R6568 68
*R6579 D1H86804A042
*R6580
*R6571 68
F_CE1_B
*R6517
CI_IOWR
CI_OE
CI_WE
CI_IORD
F_CE2_B
*R6518
CI_CE1_B
CI_IOWR_B
CI_OE_B
CI_WE_B
CI_IORD_B
CI_REG_B
CI_CE2_B
CI_IORD_B
CI_IOWR_B
*R6589 10k
*R6590 D1H81034A042
F_RESET_B
F_CD2_B
F_IREQ_B
F_WAIT_B
F_CD1_B
*R6572 68
CD2_B_3.3V
IREQ_B_3.3V
WAIT_B_3.3V
CD1_B_3.3V
CD2_B_5V
IREQ_B_5V
WAIT_B_5V
CD1_B_5V
CI_RESET_B
CI_CD2_B
CI_IREQ_B
CI_WAIT_B
CI_CD1_B
*R6586
F_PVALO_B
F_PSYNCO_B
F_PCLKO_B
*TD6510
*TD6517
*TD6513
*R6559 47
*R6560 47
*R6561 47
*R6556 10k
CI_MIVAL_B
CI_MISTRT_B
CI_MCLKI_B
*TD6521
F_PD00_B
F_PD01_B
F_PD02_B
F_PD03_B
F_PD04_B
F_PD05_B
F_PD06_B
F_PD07_B
*R6562 D1H84704A042
*R6563 D1H84704A042
CI_MDI0_B
CI_MDI1_B
CI_MDI2_B
CI_MDI3_B
CI_MDI4_B
CI_MDI5_B
CI_MDI6_B
CI_MDI7_B
*R6632 10k
*R6607 10k
*Q6502 B1ABCE000015
*IC6420 C0JBAU000043 TC74VHC541FK(EL.K)
*C6477 0.1u 16V
*TD6007
F_PDI0_B
F_PDI1_B
F_PDI2_B
F_PDI3_B
F_PDI4_B
F_PDI5_B
F_PDI6_B
F_PDI7_B
D1H86804A042 *R6634
D1H86804A042 *R6652
M_MDOB0
M_MDOB1
M_MDOB2
M_MDOB3
M_MDOB4
M_MDOB5
M_MDOB6
M_MDOB7
*IC6421 C0JBAU000043 TC74VHC541FK(EL.K)
*C6478 0.1u 16V
F_PVALI_B
F_PSYNCI_B
F_PCLKI_B
*TD6010
*TD6009
*TD6008
*R6660
*R6661
*R6662
M_MOVALB
M_MOSTRTB
M_MOCLKB
F_OCP_B
F_POWER_B
*R6679
*R6680
*R6583 10k
*TP6504
*R6584 10k
*VJ6506
*C6530 10u 16V
*IC6505A C0DBZYY00723 BD2242G-GTR
VIN VOUT GND ILIM EN /OC
*R6551 28.7k
*C6528 0.1u 16V
VJ6507
*C6529 16V 0.1u
*TP6505
*TP6506
SUB_CI_5V_B
GPIO44
*R6521

A-BOARD (11/26)

CI SLOT

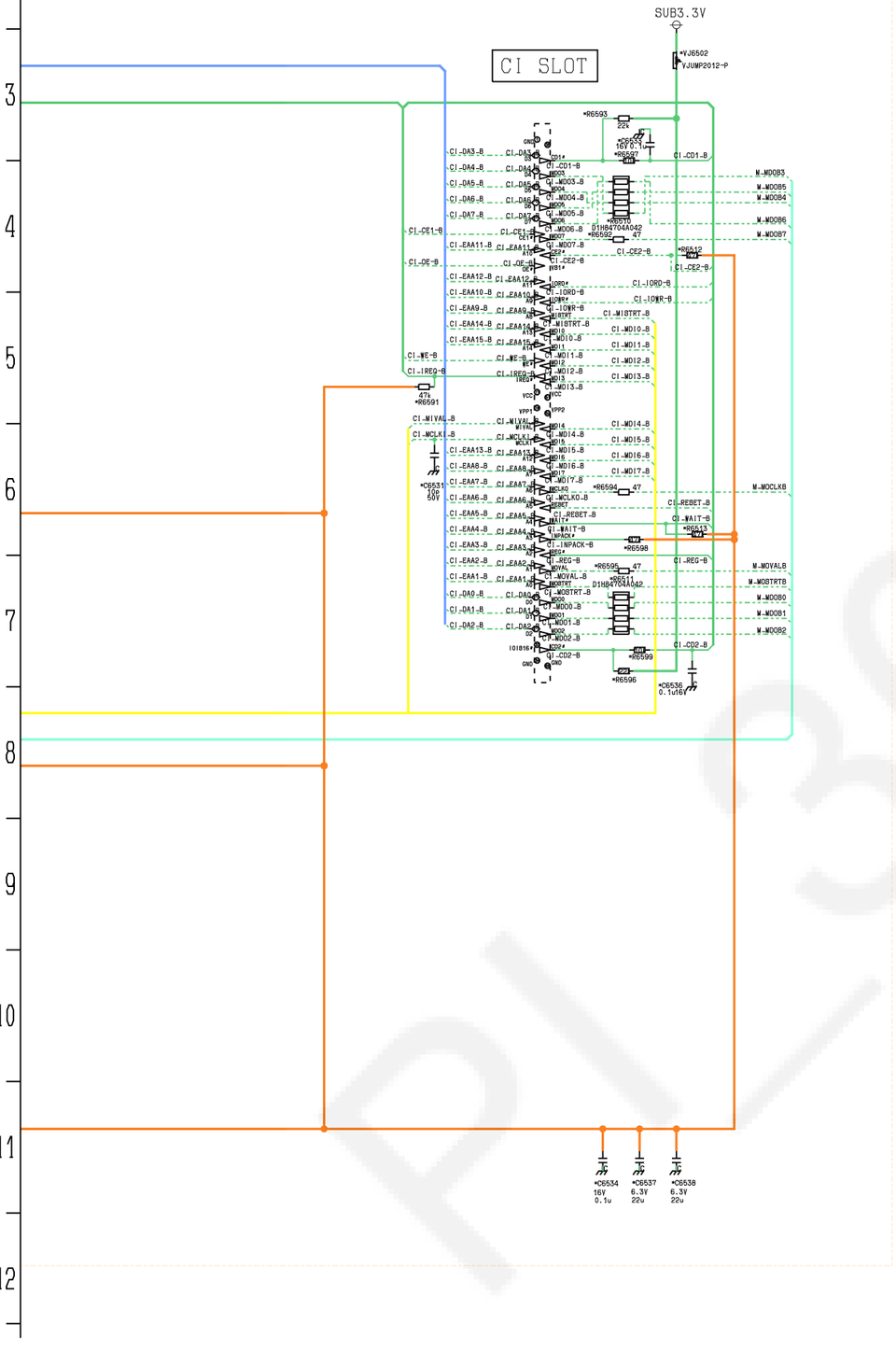

CI

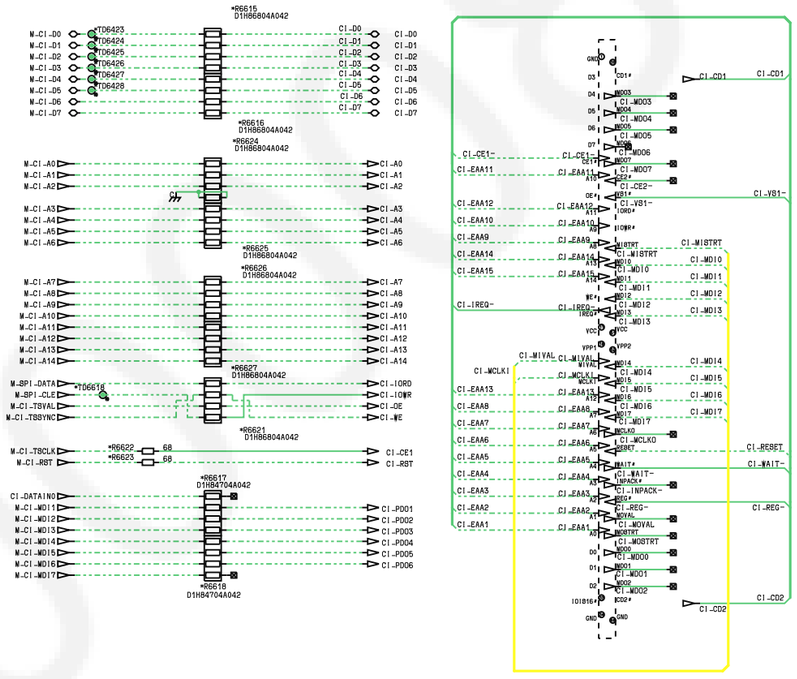

A-BOARD (12/26)

AMP

A12 TO SPEAKER

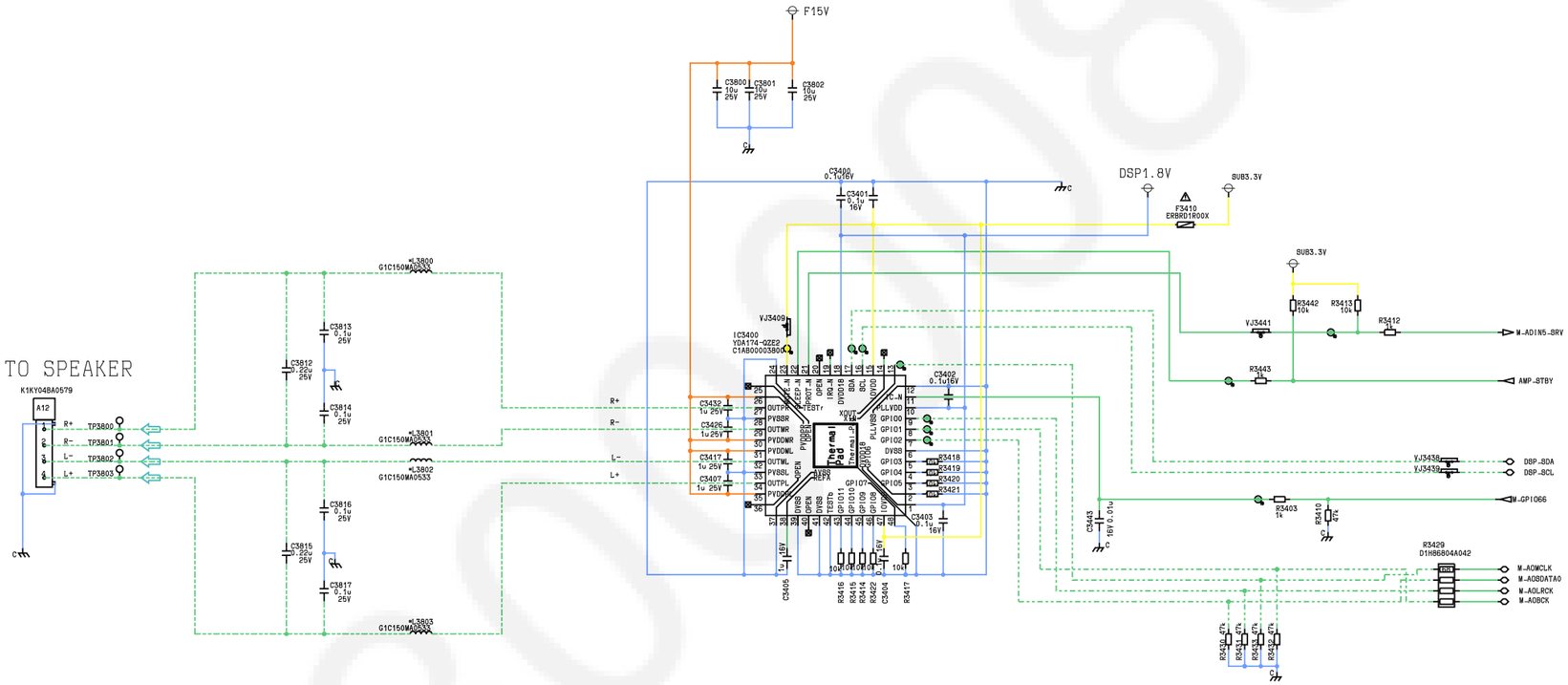

DSP1.8V

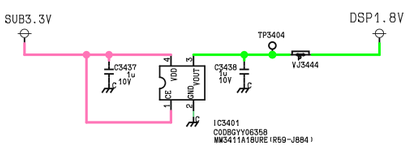

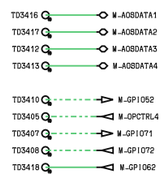

⚠ A-BOARD (13/26)

FR-TC-CONN

A16 TO PANEL

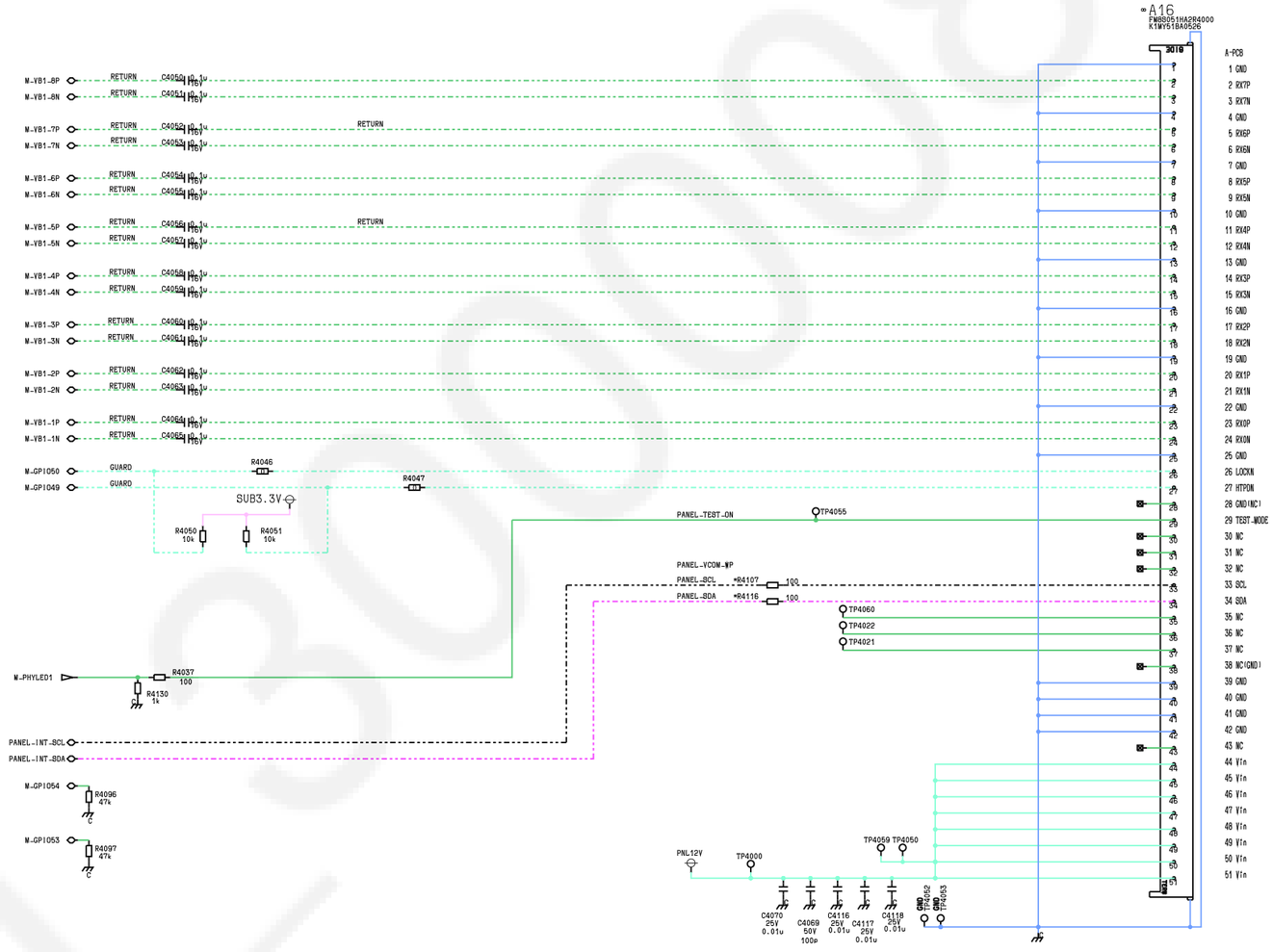

A-BOARD (14/26)

P-A_CONNECTER

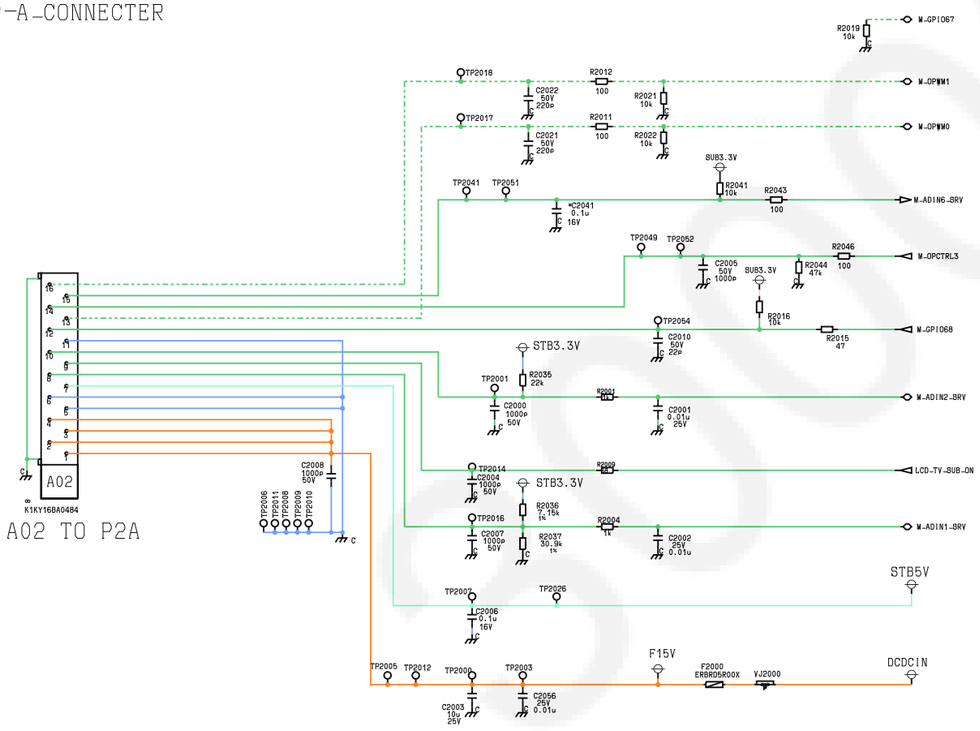

A-K_CONNECTER

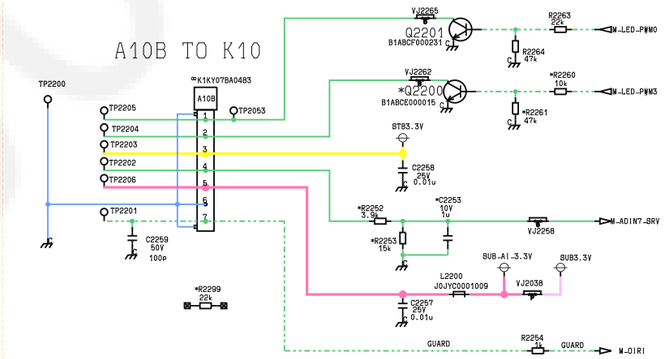

TEMP-SENSOR

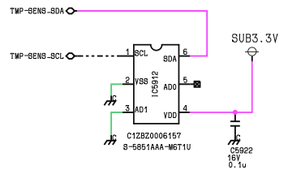

FAN-CONTROL

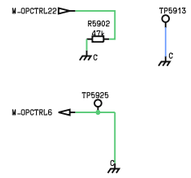

⚠ A-BOARD (15/26)

eMMC

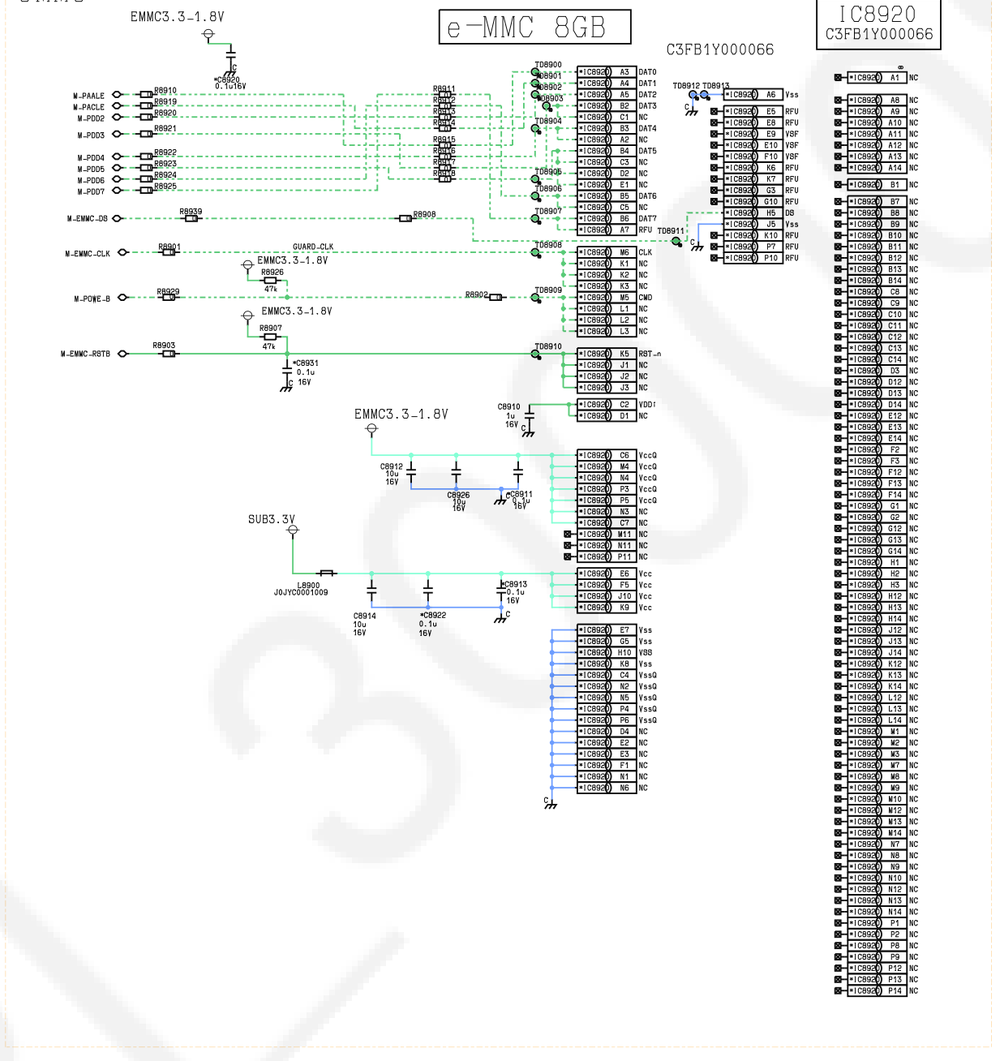

EX-BUS

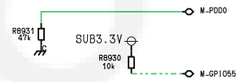

A-BOARD (16/26)

ETHER-PHY

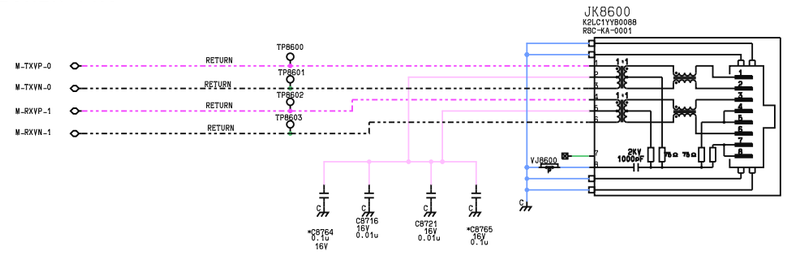

PHY3.3V

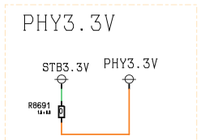

USB-BT-WIFI

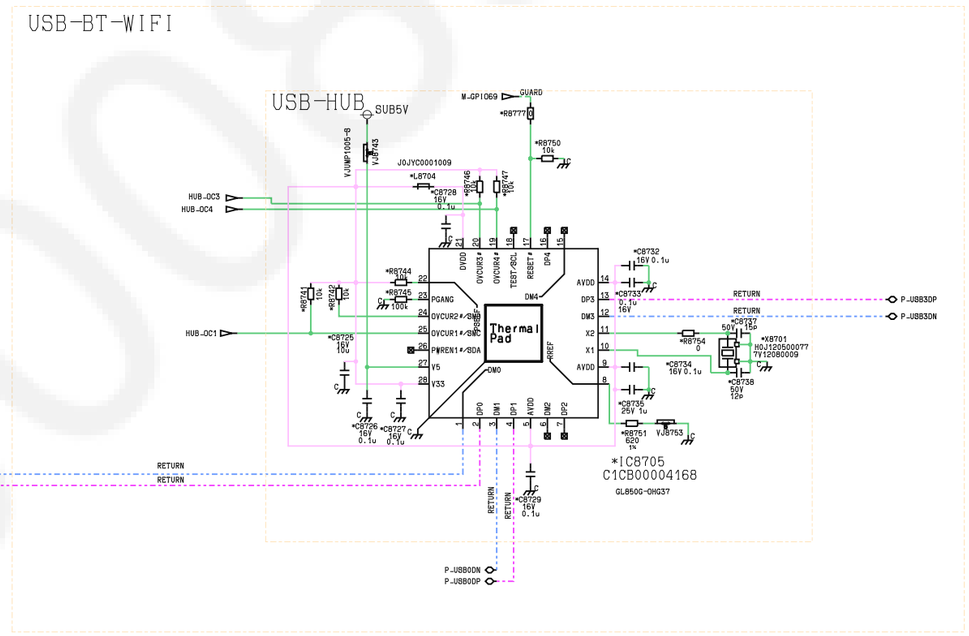

USB0

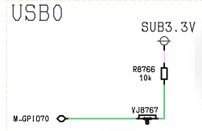

USB1

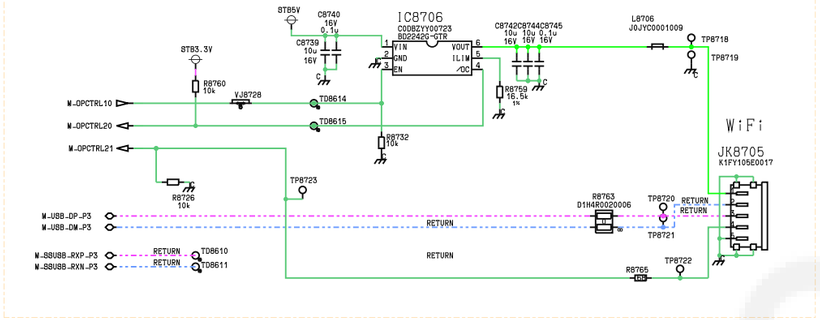

USB-DEMO

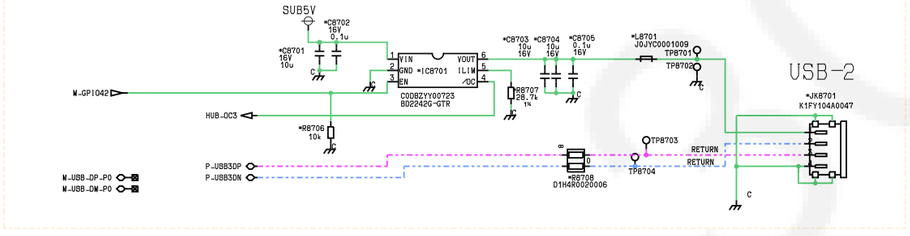

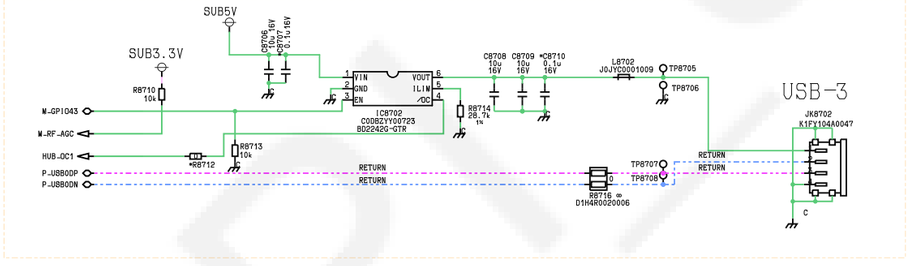

USB-1(3.0)

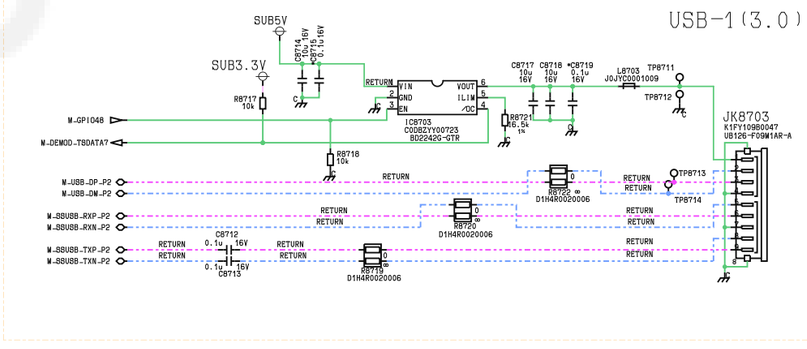

SD-CARD

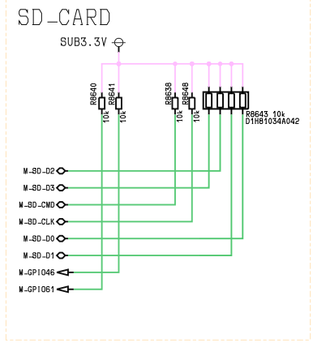

A-BOARD (17/26)

ASIC

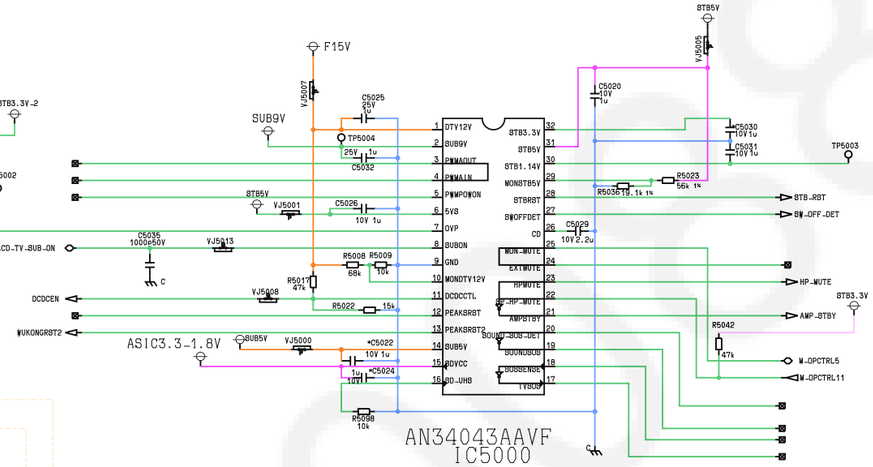

OVP

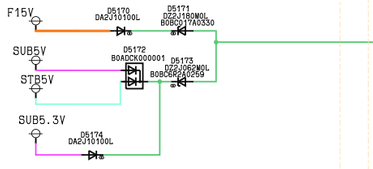

SUB5V

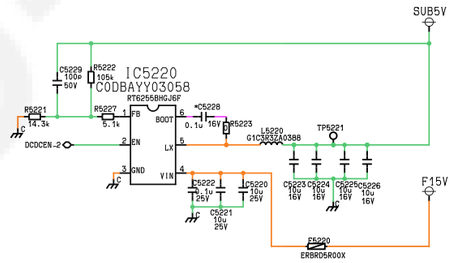

SUB3.3V

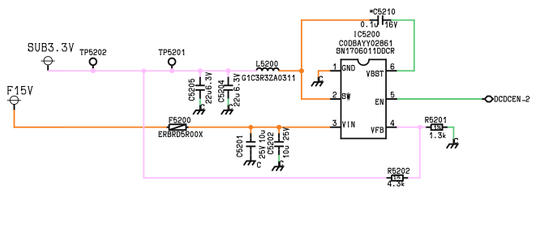

PNL12V

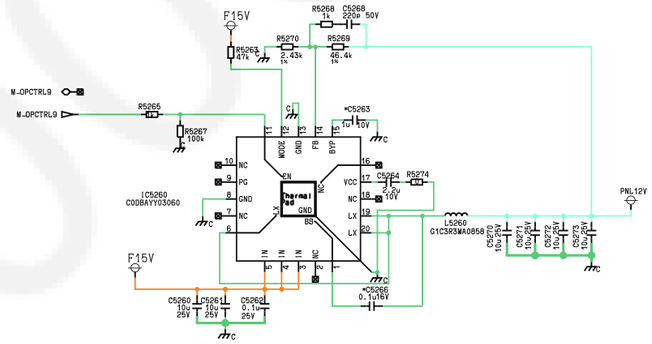

EMMC1.8V

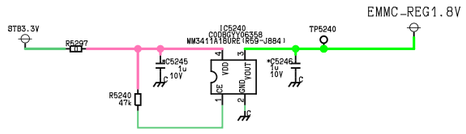

EMMC3.3-1.8V

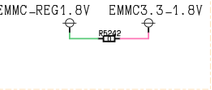

SD3.3-1.8V

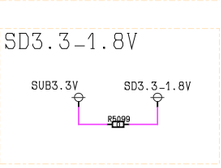

SUB5.3V

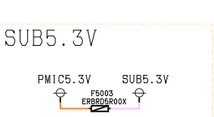

RESET/SENSE

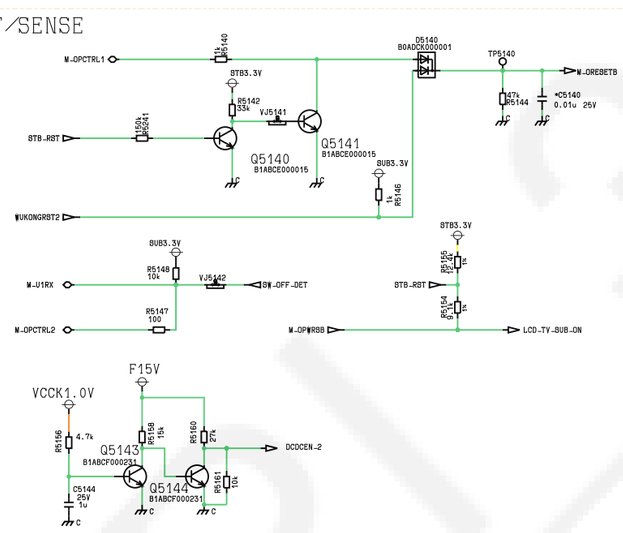

STB3.3V-2

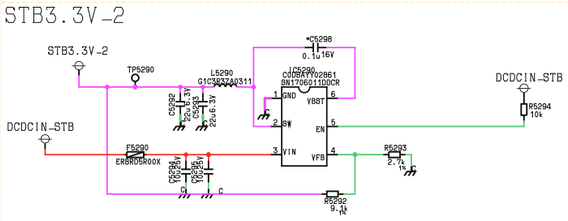

BYPASS-CAPACITOR

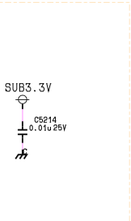

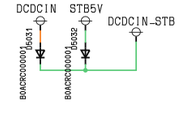

A-BOARD (18/26)

IC8000
C1AB00004666

Standby Power Domain

Miscellaneous

ORESETB	AN22	IC800	M-ORESETB

LOCK/WUKONG

CLK / Crystal

XTALI	AN29	IC800	M-XTALI
XTALO	AP29	IC800	M-XTALO

UART

U0RX	AJ14	IC800	M-U0RX
U0TX	AH14	IC800	M-U0TX

Infrared

OIRI	AJ17	IC800	M-OIRI

Power Management

OPCTRL0	AJ20	IC800	M-OPCTRL0
OPCTRL1	AH19	IC800	M-OPCTRL1
OPCTRL2	AN23	IC800	M-OPCTRL2
OPCTRL3	AH17	IC800	M-OPCTRL3
OPCTRL4	AH16	IC800	M-OPCTRL4
OPCTRL5	AJ18	IC800	M-OPCTRL5
OPCTRL6	AG20	IC800	M-OPCTRL6
OPCTRL7	AK17	IC800	M-OPCTRL7
OPCTRL8	AH20	IC800	M-OPCTRL8
OPCTRL9	AG17	IC800	M-OPCTRL9
OPCTRL10	AG18	IC800	M-OPCTRL10
OPCTRL11	AK18	IC800	M-OPCTRL11
OPCTRL12	AJ12	IC800	M-OPCTRL12
OPCTRL13	AK11	IC800	M-OPCTRL13
OPCTRL14	AL11	IC800	M-OPCTRL14
OPCTRL15	AL12	IC800	M-OPCTRL15
OPCTRL16	AK12	IC800	M-OPCTRL16
OPCTRL17	AH12	IC800	M-OPCTRL17
OPCTRL18	AH11	IC800	M-OPCTRL18
OPCTRL19	AJ11	IC800	M-OPCTRL19
OPCTRL20	AJ10	IC800	M-OPCTRL20
OPCTRL21	AB8	IC800	M-OPCTRL21
OPCTRL22	AB9	IC800	M-OPCTRL22
OPCTRL23	AC5	IC800	M-OPCTRL23
OPCTRL24	AC8	IC800	M-OPCTRL24
OPWRSB	AL14	IC800	M-OPWRSB

HDMI

HDMI-CEC-1	AD27	IC800	M-HDMI-CEC-1
HDMI-0-SDA	AG29	IC800	M-HDMI-0-SDA
HDMI-0-SCL	AG30	IC800	M-HDMI-0-SCL
HDMI-0-HPD-CBUS	AH30	IC800	M-HDMI-0-HPD-CBUS
HDMI-0-PWR5V	AE27	IC800	M-HDMI-0-PWR5V
WHL-SENSE	AE29	IC800	M-WHL-SENSE
HDMI-1-SDA	AH29	IC800	M-HDMI-1-SDA
HDMI-1-SCL	AG28	IC800	M-HDMI-1-SCL
HDMI-1-HPD	AH28	IC800	M-HDMI-1-HPD
HDMI-1-PWR5V	AJ29	IC800	M-HDMI-1-PWR5V
HDMI-2-SDA	AK29	IC800	M-HDMI-2-SDA
HDMI-2-SCL	AJ27	IC800	M-HDMI-2-SCL
HDMI-2-HPD	AJ28	IC800	M-HDMI-2-HPD
HDMI-2-PWR5V	AJ30	IC800	M-HDMI-2-PWR5V
NC-AL34	AL34	IC800	M-HDMI-3-SDA
NC-AL33	AL33	IC800	M-HDMI-3-SCL
NC-AL31	AL31	IC800	M-HDMI-3-HPD
NC-AL32	AL32	IC800	M-HDMI-3-PWR5V

IIC

STB-SCL	AG14	IC800	M-STB-SCL
STB-SDA	AG13	IC800	M-STB-SDA

LED-PWM

LED-PWM0	AK15	IC800	M-LED-PWM0
LED-PWM1	AJ15	IC800	M-LED-PWM1
LED-PWM2	AH15	IC800	M-LED-PWM2
LED-PWM3	AG15	IC800	M-LED-PWM3

Analog Video Input

PROP	AN26	IC800	M-PROP

Servo ADC input

ADIN0-SRV	AM23	IC800	M-ADIN0-SRV
ADIN1-SRV	AP23	IC800	M-ADIN1-SRV
ADIN2-SRV	AL24	IC800	M-ADIN2-SRV
ADIN3-SRV	AL29	IC800	M-ADIN3-SRV
ADIN4-SRV	AL23	IC800	M-ADIN4-SRV
ADIN5-SRV	AF18	IC800	M-ADIN5-SRV
ADIN6-SRV	AJ24	IC800	M-ADIN6-SRV
ADIN7-SRV	AK14	IC800	M-ADIN7-SRV
ADIN8-SRV	AP24	IC800	M-ADIN8-SRV
ADIN9-SRV	AN24	IC800	M-ADIN9-SRV

Ethernet

PHYLED0	AL20	IC800	M-PHYLED0
PHYLED1	AK20	IC800	M-PHYLED1

Miscellaneous

FSRC-WR	Y30	IC800	M-FSRC-WR
WEWTN	X11	IC800	M-WEWTN
WEWTP	K10	IC800	M-WEWTP
POR-OPT	AN22	IC800	M-POR-OPT
REXTON	J9	IC800	M-REXTON

Serial / NAND Flash / EMMC

PDD0	AJ9	IC800	M-PDD0
PDD1	AH10	IC800	M-PDD1
PDD2	AP14	IC800	M-PDD2
PDD3	AP12	IC800	M-PDD3
PDD4	AN12	IC800	M-PDD4
PDD5	AN13	IC800	M-PDD5
PDD6	AN14	IC800	M-PDD6
PDD7	AM14	IC800	M-PDD7
PDDEO-B	AH9	IC800	M-PDDEO-B
PAALE	AM12	IC800	M-PAALE
PACLE	AM13	IC800	M-PACLE
POWE-B	AM11	IC800	M-POWE-B
PODE-B	AG11	IC800	M-PODE-B
EMMC-CLK	AP10	IC800	M-EMMC-CLK
EMMC-DS	AN10	IC800	M-EMMC-DS
EMMC-RSTB	AN11	IC800	M-EMMC-RSTB

IIC

OSCL0	AN4	IC800	M-OSCL0
OSDA0	AN5	IC800	M-OSDA0
OSCL1	AN7	IC800	M-OSCL1
OSDA1	AN7	IC800	M-OSDA1
OSCL2	Y31	IC800	M-OSCL2
OSDA2	W31	IC800	M-OSDA2

PWM

OPWM0	AP7	IC800	M-OPWM0
OPWM1	AE7	IC800	M-OPWM1
OPWM2	AP6	IC800	M-OPWM2

LVDS / VB1

VB1-1P	AM1	IC800	M-VB1-1P
VB1-1N	AM2	IC800	M-VB1-1N
VB1-2P	AL3	IC800	M-VB1-2P
VB1-2N	AL4	IC800	M-VB1-2N
VB1-3P	AK3	IC800	M-VB1-3P
VB1-3N	AK4	IC800	M-VB1-3N
VB1-4P	AK1	IC800	M-VB1-4P
VB1-4N	AK2	IC800	M-VB1-4N
VB1-5P	AJ3	IC800	M-VB1-5P
VB1-5N	AJ4	IC800	M-VB1-5N
VB1-6P	AH3	IC800	M-VB1-6P
VB1-6N	AH4	IC800	M-VB1-6N
VB1-7P	AH1	IC800	M-VB1-7P
VB1-7N	AH2	IC800	M-VB1-7N
VB1-8P	AG3	IC800	M-VB1-8P
VB1-8N	AG4	IC800	M-VB1-8N
VB1-9P	AF3	IC800	M-VB1-9P
VB1-9N	AF4	IC800	M-VB1-9N
VB1-10P	AF1	IC800	M-VB1-10P
VB1-10N	AF2	IC800	M-VB1-10N
VB1-11P	AE3	IC800	M-VB1-11P
VB1-11N	AE4	IC800	M-VB1-11N
VB1-12P	AD3	IC800	M-VB1-12P
VB1-12N	AD4	IC800	M-VB1-12N
VB1-13P	AD1	IC800	M-VB1-13P
VB1-13N	AD2	IC800	M-VB1-13N
VB1-14P	AC3	IC800	M-VB1-14P
VB1-14N	AC4	IC800	M-VB1-14N
VB1-15P	AB3	IC800	M-VB1-15P
VB1-15N	AB4	IC800	M-VB1-15N
VB1-16P	AB1	IC800	M-VB1-16P
VB1-16N	AB2	IC800	M-VB1-16N
VB1-17P	AA3	IC800	M-VB1-17P
VB1-17N	AA4	IC800	M-VB1-17N
VB1-18P	Y3	IC800	M-VB1-18P
VB1-18N	Y4	IC800	M-VB1-18N
VB1-19P	Y1	IC800	M-VB1-19P
VB1-19N	Y2	IC800	M-VB1-19N
VB1-20P	W3	IC800	M-VB1-20P
VB1-20N	W4	IC800	M-VB1-20N

HDMI Receiver

HDMI-0-RX-0	AA32	IC800	M-HDMI-0-RX-0
HDMI-0-RX-0B	AA31	IC800	M-HDMI-0-RX-0B
HDMI-0-RX-1	AA34	IC800	M-HDMI-0-RX-1
HDMI-0-RX-1B	AA33	IC800	M-HDMI-0-RX-1B
HDMI-0-RX-2	Y34	IC800	M-HDMI-0-RX-2
HDMI-0-RX-2B	Y33	IC800	M-HDMI-0-RX-2B
HDMI-0-RX-C	AB32	IC800	M-HDMI-0-RX-C
HDMI-0-RX-CB	AB31	IC800	M-HDMI-0-RX-CB
HDMI-1-RX-0	AD32	IC800	M-HDMI-1-RX-0
HDMI-1-RX-0B	AD31	IC800	M-HDMI-1-RX-0B
HDMI-1-RX-1	AC32	IC800	M-HDMI-1-RX-1
HDMI-1-RX-1B	AC31	IC800	M-HDMI-1-RX-1B
HDMI-1-RX-2	AC34	IC800	M-HDMI-1-RX-2
HDMI-1-RX-2B	AC33	IC800	M-HDMI-1-RX-2B
HDMI-1-RX-C	AE34	IC800	M-HDMI-1-RX-C
HDMI-1-RX-CB	AE33	IC800	M-HDMI-1-RX-CB
HDMI-2-RX-0	AG34	IC800	M-HDMI-2-RX-0
HDMI-2-RX-0B	AG33	IC800	M-HDMI-2-RX-0B
HDMI-2-RX-1	AF32	IC800	M-HDMI-2-RX-1
HDMI-2-RX-1B	AF31	IC800	M-HDMI-2-RX-1B
HDMI-2-RX-2	AE32	IC800	M-HDMI-2-RX-2
HDMI-2-RX-2B	AE31	IC800	M-HDMI-2-RX-2B
HDMI-2-RX-C	AG32	IC800	M-HDMI-2-RX-C
HDMI-2-RX-CB	AG31	IC800	M-HDMI-2-RX-CB
NC-AJ32	AJ32	IC800	M-HDMI-3-RX-0
NC-AJ31	AJ31	IC800	M-HDMI-3-RX-0B
NC-AJ34	AJ34	IC800	M-HDMI-3-RX-1
NC-AJ33	AJ33	IC800	M-HDMI-3-RX-1B
NC-AH32	AH32	IC800	M-HDMI-3-RX-2
NC-AH31	AH31	IC800	M-HDMI-3-RX-2B
NC-AK32	AK32	IC800	M-HDMI-3-RX-C
NC-AK31	AK31	IC800	M-HDMI-3-RX-CB

CI / GPIO

CI-A0	J30	IC800	M-CI-A0
CI-A1	H30	IC800	M-CI-A1
CI-A2	E29	IC800	M-CI-A2
CI-A3	B30	IC800	M-CI-A3
CI-A4	C30	IC800	M-CI-A4
CI-A5	A31	IC800	M-CI-A5
CI-A6	A32	IC800	M-CI-A6
CI-A7	A33	IC800	M-CI-A7
CI-A8	G33	IC800	M-CI-A8
CI-A9	H33	IC800	M-CI-A9
CI-A10	J34	IC800	M-CI-A10
CI-A11	J32	IC800	M-CI-A11
CI-A12	B33	IC800	M-CI-A12
CI-A13	G32	IC800	M-CI-A13
CI-A14	F33	IC800	M-CI-A14
CI-MCLKI	B34	IC800	M-CI-MCLKI
CI-MIVAL	D32	IC800	M-CI-MIVAL
CI-MISTRT	G34	IC800	M-CI-MISTRT
CI-MD10	F34	IC800	M-CI-MD10
CI-MD11	F32	IC800	M-CI-MD11
CI-MD12	E32	IC800	M-CI-MD12
CI-MD13	D34	IC800	M-CI-MD13
CI-MD14	C34	IC800	M-CI-MD14
CI-MD15	C33	IC800	M-CI-MD15
CI-MD16	B32	IC800	M-CI-MD16
CI-MD17	B31	IC800	M-CI-MD17
CI-D0	J29	IC800	M-CI-D0
CI-D1	G30	IC800	M-CI-D1
CI-D2	F30	IC800	M-CI-D2
CI-D3	N29	IC800	M-CI-D3
CI-D4	P27	IC800	M-CI-D4
CI-D5	L27	IC800	M-CI-D5
CI-D6	K33	IC800	M-CI-D6
CI-D7	K34	IC800	M-CI-D7
CI-MOD0	G31	IC800	M-CI-MOD0
CI-MOD1	F31	IC800	M-CI-MOD1
CI-MOD2	E31	IC800	M-CI-MOD2
CI-MOD3	N28	IC800	M-CI-MOD3
CI-MOD4	N27	IC800	M-CI-MOD4
CI-MOD5	L28	IC800	M-CI-MOD5
CI-MOD6	K28	IC800	M-CI-MOD6
CI-MOD7	K32	IC800	M-CI-MOD7
CI-INT	K31	IC800	M-CI-INT
GPIO42	L32	IC800	M-GPIO42
GPIO43	T27	IC800	M-GPIO43
GPIO44	P28	IC800	M-GPIO44
GPIO45	F29	IC800	M-GPIO45
GPIO46	B29	IC800	M-GPIO46
CI-RST	K30	IC800	M-CI-RST
GPIO48	L33	IC800	M-GPIO48
GPIO49	AF7	IC800	M-GPIO49
GPIO50	AG7	IC800	M-GPIO50
GPIO51	AF6	IC800	M-GPIO51
GPIO52	AE8	IC800	M-GPIO52
GPIO53	AC7	IC800	M-GPIO53
GPIO54	AB7	IC800	M-GPIO54
GPIO55	AC6	IC800	M-GPIO55
GPIO56	AP3	IC800	M-GPIO56
GPIO57	AN4	IC800	M-GPIO57
GPIO58	AP4	IC800	M-GPIO58
GPIO59	AN5	IC800	M-GPIO59
GPIO60	AP5	IC800	M-GPIO60
GPIO61	D30	IC800	M-GPIO61
GPIO62	AB29	IC800	M-GPIO62
GPIO63	L31	IC800	M-GPIO63
GPIO64	P29	IC800	M-GPIO64
GPIO65	E30	IC800	M-GPIO65
GPIO66	R27	IC800	M-GPIO66
GPIO67	AP2	IC800	M-GPIO67
GPIO68	AN2	IC800	M-GPIO68
GPIO69	AN3	IC800	M-GPIO69
GPIO70	AF8	IC800	M-GPIO70
GPIO71	AF5	IC800	M-GPIO71
GPIO72	AE6	IC800	M-GPIO72

Analog Video Input

BOY0	AN25	IC800	M-BOY0
PB0P	AP26	IC800	M-PB0P
Y0P	AM25	IC800	M-Y0P
COM0	AN26	IC800	M-COM0
CVBS-COM	AM27	IC800	M-CVBS-COM
CVBS0P	AL27	IC800	M-CVBS0P
CVBS1P	AL25	IC800	M-CVBS1P

Analog Vieo Output

VDACX-OUT	AJ25	IC800	M-VDACX-OUT

UART

U1RX	AN8	IC800	M-U1RX
U1TX	AP8	IC800	M-U1TX

NC

NC-A1	A1	IC800	
NC-A34	A34	IC800	
NC-AP1	AP1	IC800	
NC-AP34	AP34	IC800	

Audio

AOBCK	AK7	IC800	M-AOBCK
AOLRCK	AK6	IC800	M-AOLRCK
AOMCLK	AL6	IC800	M-AOMCLK
AOSDATA0	AK5	IC800	M-AOSDATA0
AOSDATA1	AL5	IC800	M-AOSDATA1
AOSDATA2	AJ7	IC800	M-AOSDATA2
AOSDATA3	AJ6	IC800	M-AOSDATA3
AOSDATA4	AJ5	IC800	M-AOSDATA4
ASPDIF00	AL15	IC800	M-ASPDIF00
ASPDIF01	AG27	IC800	M-ASPDIF01
ASPDIFI	AN6	IC800	M-ASPDIFI

Audio Line in ADC

AIN-L0	AP32	IC800	M-AIN-L0
AIN-L1	AN32	IC800	M-AIN-L1
AIN-R0	AN34	IC800	M-AIN-R0
AIN-R1	AP33	IC800	M-AIN-R1
VMID-AADC	AP30	IC800	M-VMID-AADC

Audio DAC

AL0-ADAC	AN31	IC800	M-AL0-ADAC
AL1-ADAC	AN30	IC800	M-AL1-ADAC
AR0-ADAC	AN33	IC800	M-AR0-ADAC
AR1-ADAC	AP31	IC800	M-AR1-ADAC

Ethernet

TXVP-0	AN20	IC800	M-TXVP-0
TXVN-0	AP20	IC800	M-TXVN-0
RXVP-1	AN19	IC800	M-RXVP-1
RXVN-1	AP19	IC800	M-RXVN-1

SDIO

SD-CMD	P33	IC800	M-SD-CMD
SD-CLK	P34	IC800	M-SD-CLK
SD-D0	N32	IC800	M-SD-D0
SD-D1	N33	IC800	M-SD-D1
SD-D2	W32	IC800	M-SD-D2
SD-D3	W33	IC800	M-SD-D3

DEMOD

IF-AGC	R31	IC800	M-IF-AGC
RF-AGC	R30	IC800	M-RF-AGC
DEMOD-RST	AB28	IC800	M-DEMOD-RST
DEMOD-TSCLK	AA27	IC800	M-DEMOD-TSCLK
DEMOD-TSVAL	Y28	IC800	M-DEMOD-TSVAL
DEMOD-TSSYNC	Y27	IC800	M-DEMOD-TSSYNC
DEMOD-TSDATA0	Y29	IC800	M-DEMOD-TSDATA0
DEMOD-TSDATA1	AB30	IC800	M-DEMOD-TSDATA1
DEMOD-TSDATA2	AC27	IC800	M-DEMOD-TSDATA2
DEMOD-TSDATA3	AD28	IC800	M-DEMOD-TSDATA3
DEMOD-TSDATA4	AD29	IC800	M-DEMOD-TSDATA4
DEMOD-TSDATA5	AC30	IC800	M-DEMOD-TSDATA5
DEMOD-TSDATA6	AE28	IC800	M-DEMOD-TSDATA6
DEMOD-TSDATA7	AD30	IC800	M-DEMOD-TSDATA7
CI-TSCLK	N30	IC800	M-CI-TSCLK
CI-TSVAL	K29	IC800	M-CI-TSVAL
CI-TSSYNC	E33	IC800	M-CI-TSSYNC
CI-TSDATA0	H31	IC800	M-CI-TSDATA0
PVR-TSCLK	C31	IC800	M-PVR-TSCLK
PVR-TSVAL	L29	IC800	M-PVR-TSVAL
PVR-TSSYNC	L30	IC800	M-PVR-TSSYNC
PVR-TSDATA0	D33	IC800	M-PVR-TSDATA0
PVR-TSDATA1	J31	IC800	M-PVR-TSDATA1
SPI-CLK	P30	IC800	M-SPI-CLK
SPI-CLK1	C32	IC800	M-SPI-CLK1
SPI-CLE	H32	IC800	M-SPI-CLE
SPI-DATA	J33	IC800	M-SPI-DATA
ADCINN-DEMOD	AP28	IC800	M-ADCINN-DEMOD
ADCINP-DEMOD	AN28	IC800	M-ADCINP-DEMOD

USB

NC-U28	U28	IC800	M-USB-DP-P0
NC-U29	U29	IC800	M-USB-DM-P0
USB-DP-P1	V28	IC800	M-USB-DP-P1
USB-DM-P1	V27	IC800	M-USB-DM-P1
SSUSB-RXN-P2	T33	IC800	M-SSUSB-RXN-P2
SSUSB-RXP-P2	T34	IC800	M-SSUSB-RXP-P2
SSUSB-TXN-P2	U32	IC800	M-SSUSB-TXN-P2
SSUSB-TXP-P2	U31	IC800	M-SSUSB-TXP-P2
USB-DP-P2	Y29	IC800	M-USB-DP-P2
USB-DM-P2	Y30	IC800	M-USB-DM-P2
SSUSB-RXN-P3	AL17	IC800	M-SSUSB-RXN-P3
SSUSB-RXP-P3	AM17	IC800	M-SSUSB-RXP-P3
SSUSB-TXN-P3	AN16	IC800	M-SSUSB-TXN-P3
SSUSB-TXP-P3	AP16	IC800	M-SSUSB-TXP-P3
USB-DP-P3	AP18	IC800	M-USB-DP-P3
USB-DM-P3	AN18	IC800	M-USB-DM-P3

⚠ A-BOARD (19/26)

IC8000
C1AB00004666

LOCK/WUKONG

DDR3 I/F CH-A

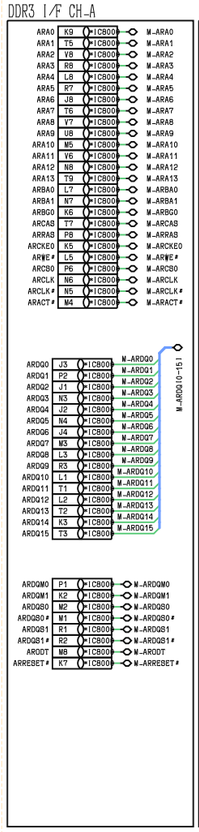

DDR3 I/F CH-B

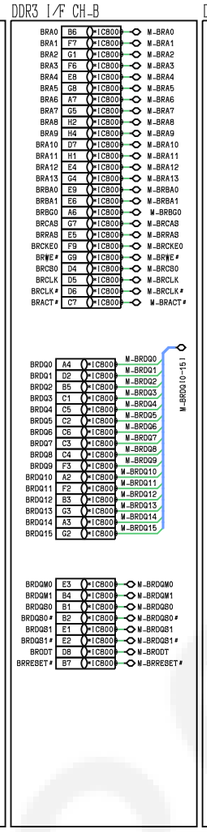

DDR3 I/F CH-C

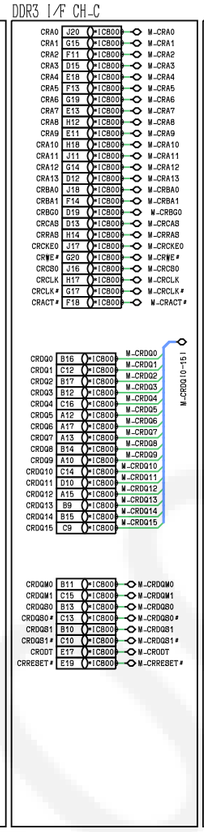

DDR3 I/F CH-D

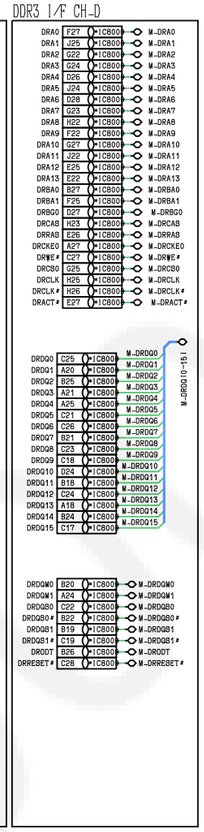

LOCK/WUKONG

Analog Power Standby 1.05V

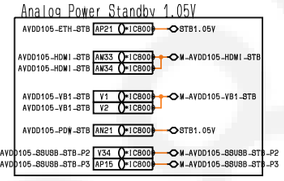

DDR I/O Power Standby 1.2V

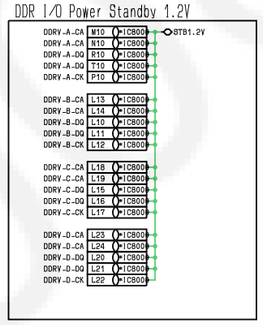

Analog Power Standby 3.3V

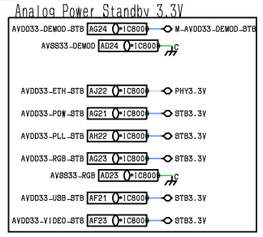

Core Power 1.0V

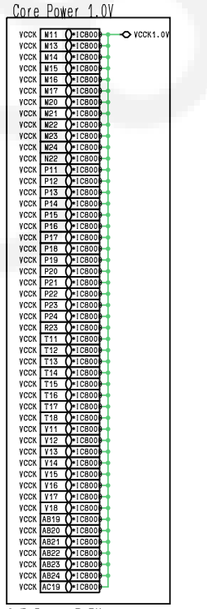

I/O Power 3.3V

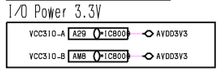

I/O Power 1.8V / 3.3V

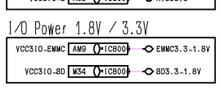

CPU Power 1.0V

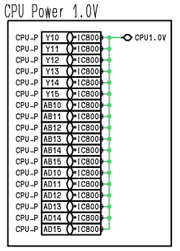

GPU Power 1.0V

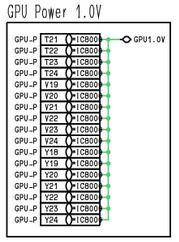

Analog Power 3.3V

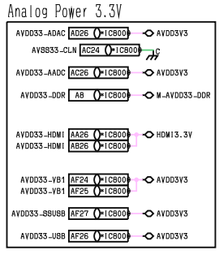

Core GND

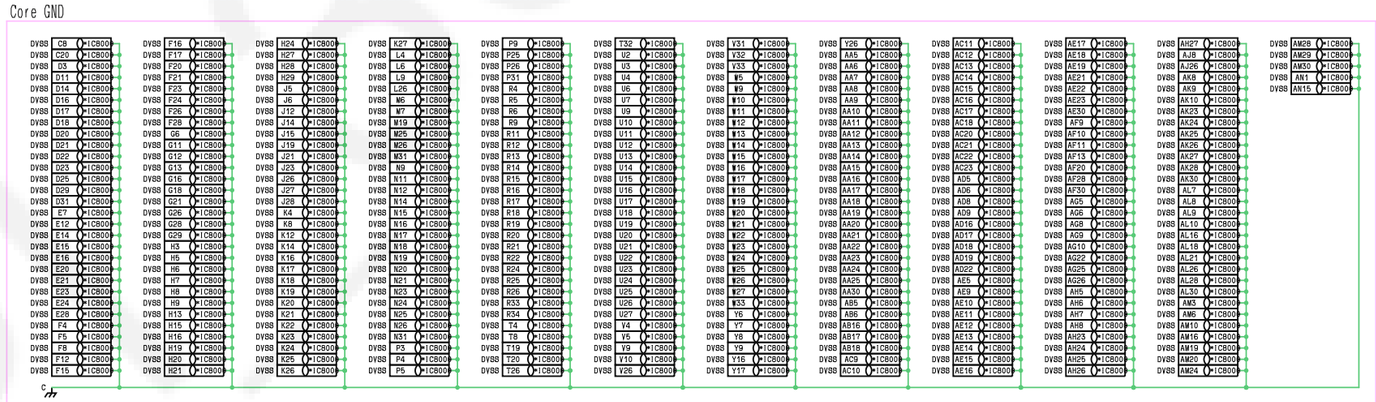

A-BOARD (20/26)

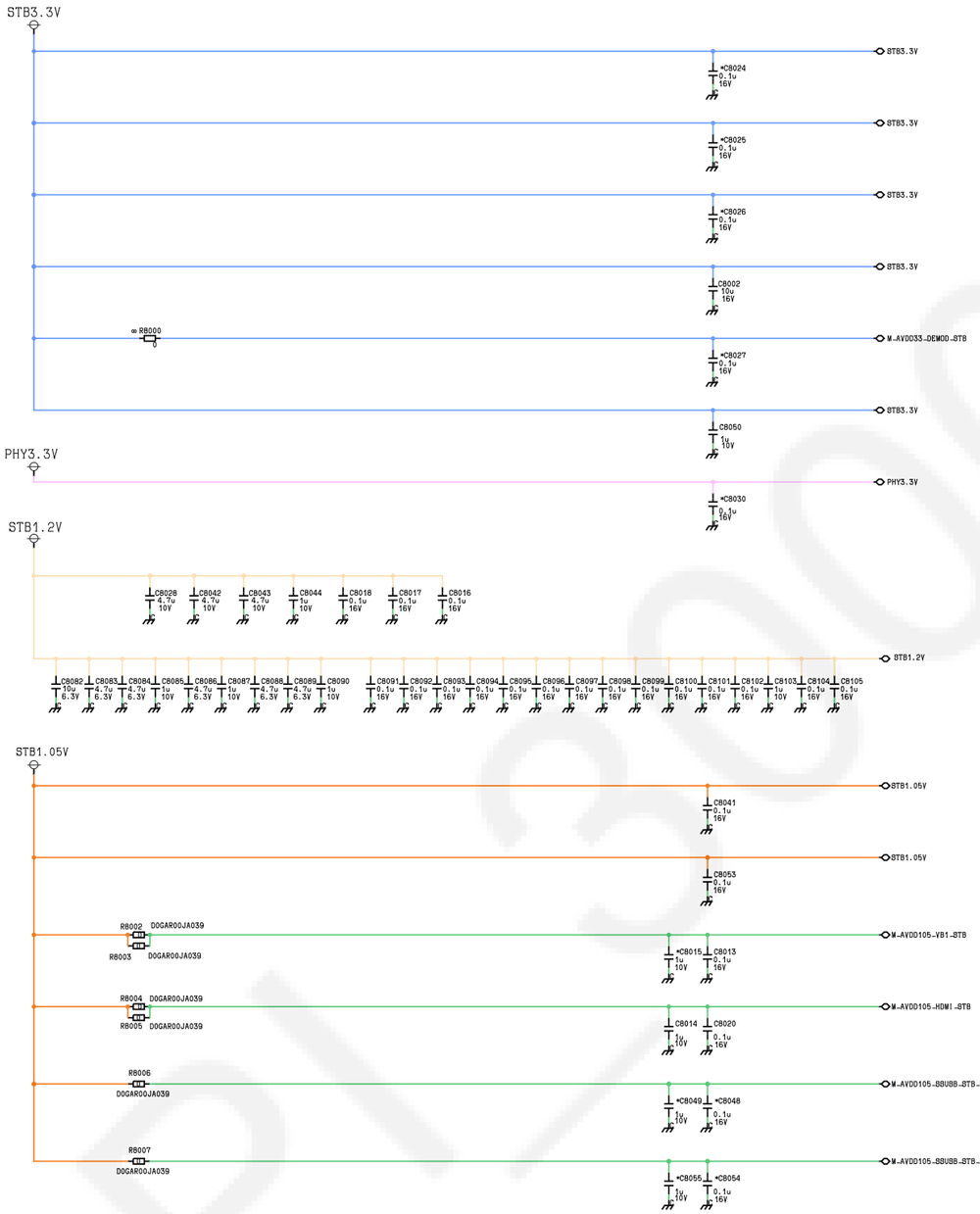
STB3.3V
*C8024 0.1u 16V
*C8025 0.1u 16V
*C8026 0.1u 16V
C8002 10u 16V
R8000 0
*C8027 0.1u 16V
C8050 1u 10V
M_AVDD33_DEMOD_STB
PHY3.3V
*C8030 0.1u 16V
STB1.2V
C8028 4.7u 10V
C8042 4.7u 10V
C8043 4.7u 10V
C8044 1u 10V
C8018 0.1u 16V
C8017 0.1u 16V
C8016 0.1u 16V
C8082 10u 6.3V
C8083 4.7u 6.3V
C8084 4.7u 6.3V
C8085 1u 10V
C8086 4.7u 6.3V
C8087 1u 10V
C8088 4.7u 6.3V
C8089 4.7u 6.3V
C8090 1u 10V
C8091 0.1u 16V
C8092 0.1u 16V
C8093 0.1u 16V
C8094 0.1u 16V
C8095 0.1u 16V
C8096 0.1u 16V
C8097 0.1u 16V
C8098 0.1u 16V
C8099 0.1u 16V
C8100 0.1u 16V
C8101 0.1u 16V
C8102 1u 10V
C8103 0.1u 16V
C8104 0.1u 16V
C8105 0.1u 16V
STB1.05V
C8041 0.1u 16V
C8053 0.1u 16V
R8002 0ΩAR00JA039
R8003 0ΩAR00JA039
*C8015 1u 10V
C8013 0.1u 16V
M_AVDD105_VB1_STB
R8004 0ΩAR00JA039
R8005 0ΩAR00JA039
C8014 1u 10V
C8020 0.1u 16V
M_AVDD105_HDMI_STB
R8006 0ΩAR00JA039
*C8049 1u 10V
*C8048 0.1u 16V
M_AVDD105_SSUSB_STB_P2
R8007 0ΩAR00JA039
*C8055 1u 10V
*C8054 0.1u 16V
M_AVDD105_SSUSB_STB_P3
SUB3.3V
AVDD3V3
R8008 0
C8012 10u 16V
C8011 0.1u 16V
*C8021 0.1u 16V
C8023 1u 10V
R8009 0ΩAR00JA039
M_AVDD33_DDR
C8029 1u 10V
C8022 1u 10V
C8045 0.1u 16V
*C8046 1u 10V
*C8047 0.1u 16V
C8010 0.1u 16V
*C8009 0.1u 16V
HDMI3.3V
*C8019 0.1u 16V
EMMC3.3_1.8V
C8106 10u 6.3V
C8058 1u 10V
SD3.3_1.8V
CP27
C8031 0.1u 16V
VCCK1.0V
C8000 10u 6.3V
*C8001 0.1u 16V
C8001 10u 6.3V
C8006 10u 6.3V
C8008 22u 6.3V
C8033 22u 6.3V
*C8004 0.1u 16V
*C8003 0.1u 16V
*C8005 0.1u 16V
*C8056 0.1u 16V
*C8034 0.1u 16V
C8035 22u 6.3V
C8036 1u 10V
C8037 1u 10V
C8038 4.7u 6.3V
C8039 1u 10V
C8040 1u 10V
C8059 1u 10V
C8060 1u 10V
C8061 1u 10V
C8062 4.7u 6.3V
CPU1.0V
C8063 10u 6.3V
C8064 1u 10V
C8065 1u 10V
C8066 4.7u 6.3V
C8067 4.7u 6.3V
C8068 1u 10V
C8069
C8072 22u 6.3V
C8070 10u 6.3V
C8071 0.1u 16V
GPU1.0V
C8073 22u 6.3V
C8074 4.7u 6.3V
C8075 22u 6.3V
C8076 4.7u 6.3V
C8077 22u 6.3V
C8078 22u 6.3V
C8079 22u 6.3V
*C8080 0.1u 16V
C8081 0.1u 16V
C8107 22u 6.3V
C8108 10u 6.3V
C8109 4.7u 6.3V
C8110 4.7u 6.3V

A-BOARD (21/26)

LOCK/MT5813_PMIC

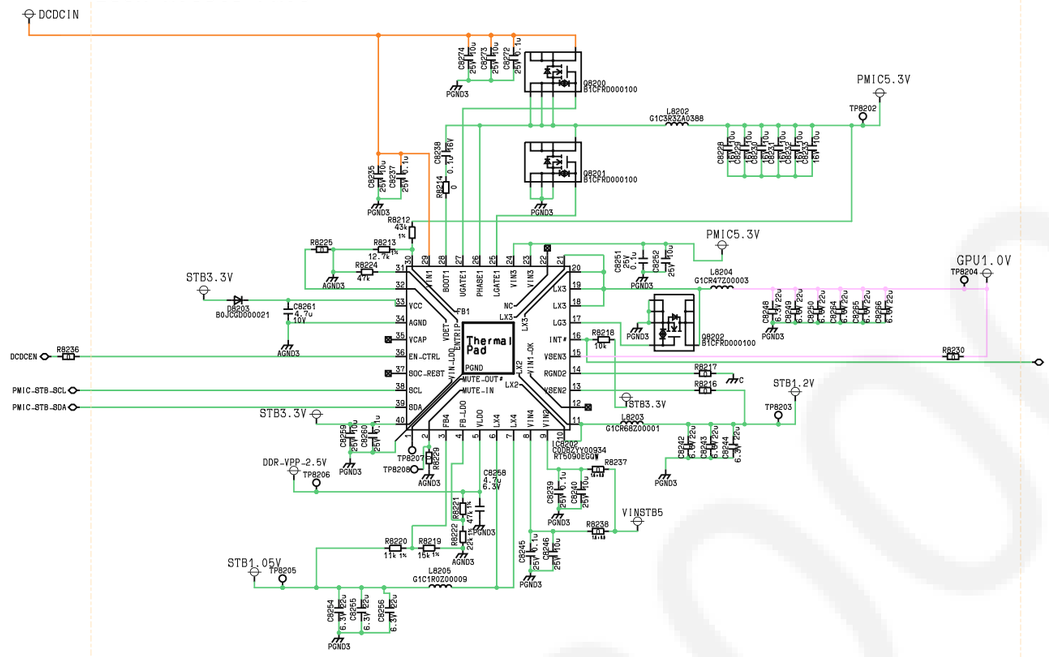

LOCK/MT5813_VCCK1.0V

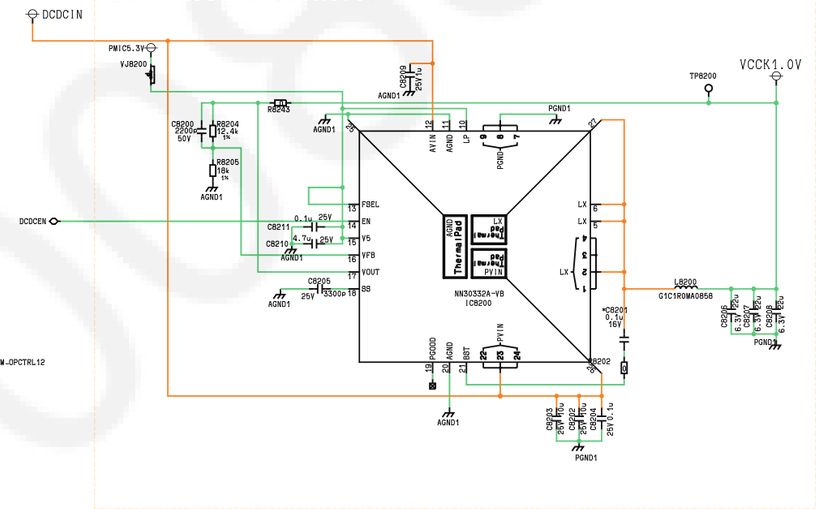

LOCK/MT5813_CPU1.0V

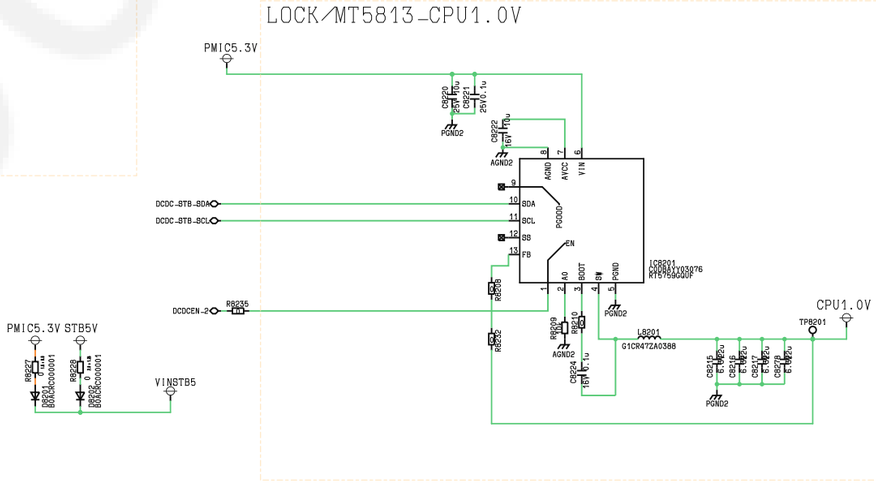

LOCK/WUKONG

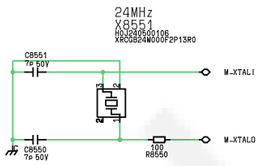

REF_R_AND_C

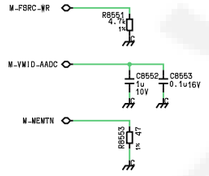

A-BOARD (22/26)

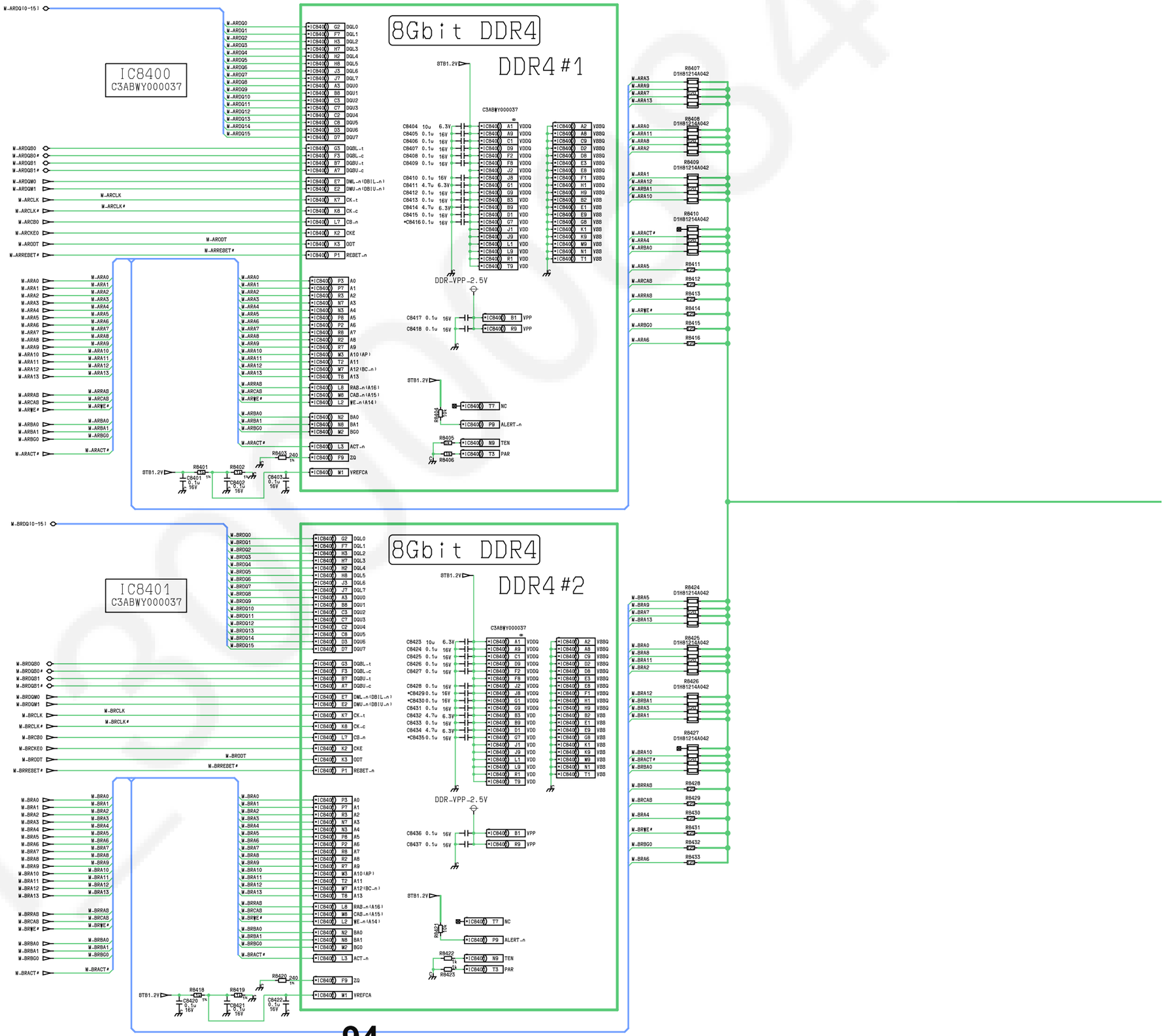
8Gbit DDR4
DDR4 #1
IC8400
C3ABWY000037
8Gbit DDR4
DDR4 #2
IC8401
C3ABWY000037
DDR_VPP_2.5V
STB1.2V

⚠ A-BOARD (23/26)

IC8402
C3ABVY000110

IC8403
C3ABVY000110

4Gbit DDR4
DDR4 #3

4Gbit DDR4
DDR4 #4

M_CRDQ10-15
M_CRDQ0 M_CRDQ1 M_CRDQ2 M_CRDQ3 M_CRDQ4 M_CRDQ5 M_CRDQ6 M_CRDQ7 M_CRDQ8 M_CRDQ9 M_CRDQ10 M_CRDQ11 M_CRDQ12 M_CRDQ13 M_CRDQ14 M_CRDQ15
M_CRDQS0 M_CRDQS0# M_CRDQS1 M_CRDQS1#
M_CRDQM0 M_CRDQM1
M_CRCLK M_CRCLK#
M_CRCS0
M_CRCKE0
M_CRODT
M_CRRESET#
M_CRA0 M_CRA1 M_CRA2 M_CRA3 M_CRA4 M_CRA5 M_CRA6 M_CRA7 M_CRA8 M_CRA9 M_CRA10 M_CRA11 M_CRA12 M_CRA13
M_CRRAS M_CRCAS M_CRWE#
M_CRBA0 M_CRBA1 M_CRBG0
M_CRACT#
DQL0 DQL1 DQL2 DQL3 DQL4 DQL5 DQL6 DQL7
DQU0 DQU1 DQU2 DQU3 DQU4 DQU5 DQU6 DQU7
DQSL-t DQSL-c DQSU-t DQSU-c
DML-n(DBIL-n) DMU-n(DBIU-n)
CK-t CK-c CKE CS-n ODT RESET-n
A0 A1 A2 A3 A4 A5 A6 A7 A8 A9 A10(AP) A11 A12(BC-n) A13
RAS-n(A16) CAS-n(A15) WE-n(A14)
BA0 BA1 BG0 ACT-n ZQ VREFCA
C3ABVY000110
VDDQ VSSQ VDD VSS VPP
DDR-VPP-2.5V
STB1.2V
R8435 240 1% C8439 0.1u 16V C8440 0.1u 16V C8441 0.1u 16V
R8436 240 1% R8437 240 1%
R8439 R8440 NC ALERT-n TEN PAR
R8441 D1H81214A042
R8442 D1H81214A042
R8443 D1H81214A042
R8444 D1H81214A042
R8445 R8446 R8447 R8448 R8449 R8450
R8452 240 1% C8458 0.1u 16V C8459 0.1u 16V C8460 0.1u 16V
R8453 240 1% R8454 240 1%
R8455 R8456 R8457 NC ALERT-n TEN PAR
R8458 D1H81214A042
R8459 D1H81214A042
R8460 D1H81214A042
R8461 D1H81214A042
R8462 R8463 R8464 R8465 R8466 R8467
C8479 C8480 C8481 C8482 C8483 C8484 C8485 C8486 C8487 C8488 C8489 C8490 0.1u 16V
C8491 C8492 C8493 C8494 C8495 C8496 C8497 C8498 C8499 C8500 C8501 C8502 0.1u 16V
TP8404
IC8404
C0DBEYY00377
RT9045GBP
C8503 0.1u 16V C8504 10u 6.3V C8505 10u 6.3V C8506 0.01u 50V
R8474 1k
C8507 1u 10V
R8468 2.2
STB5V
C8508 10u 6.3V C8509 0.1u 16V
R8469 100k 1%
R8470 100k 1%
R8472 10k
Q8400 B1CBHG000002
M_OPCTRL13

A-BOARD (24/26)

TUNER

TUNER_IF

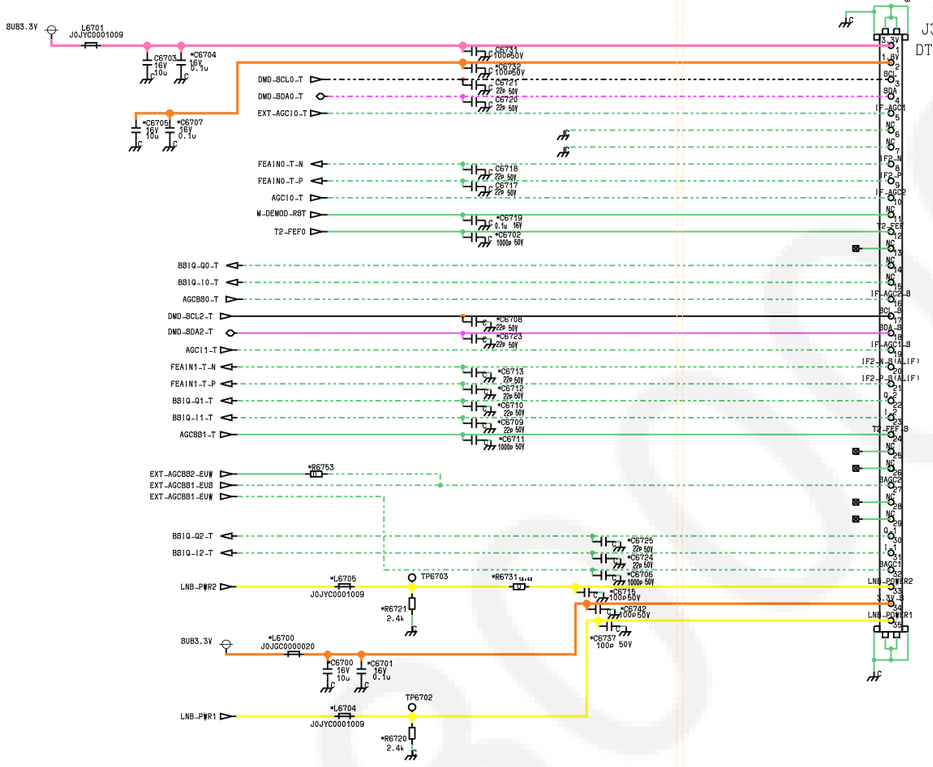

MAIN_TUNER

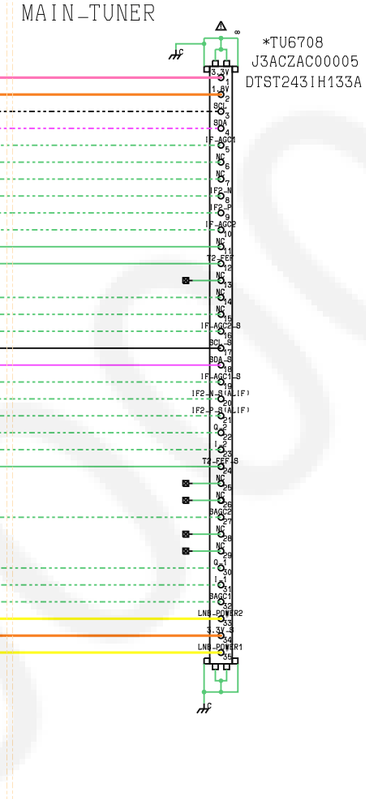

IF

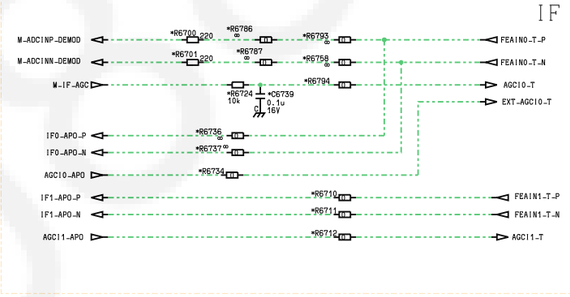

IQ

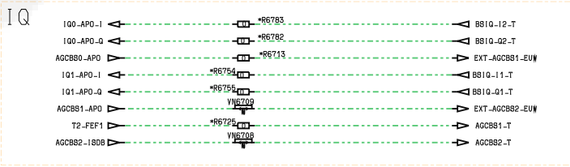

I2C

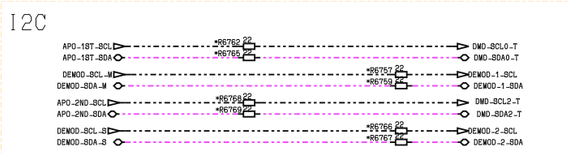

POWER_FE

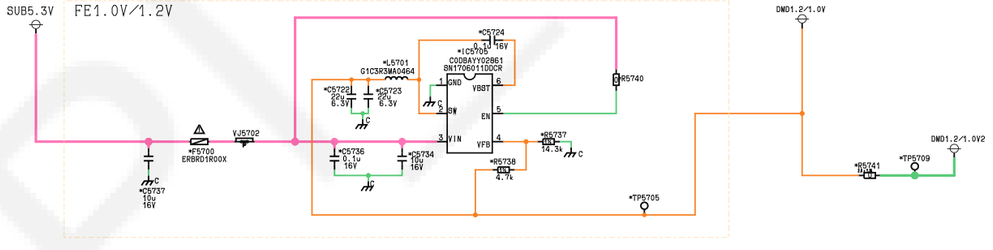

⚠ A-BOARD (25/26)

LNB_PWR1

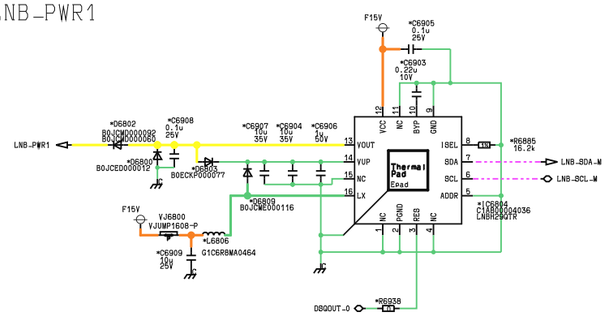

LNB_PWR2

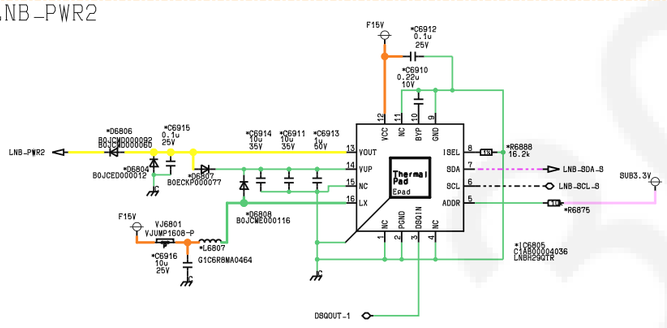

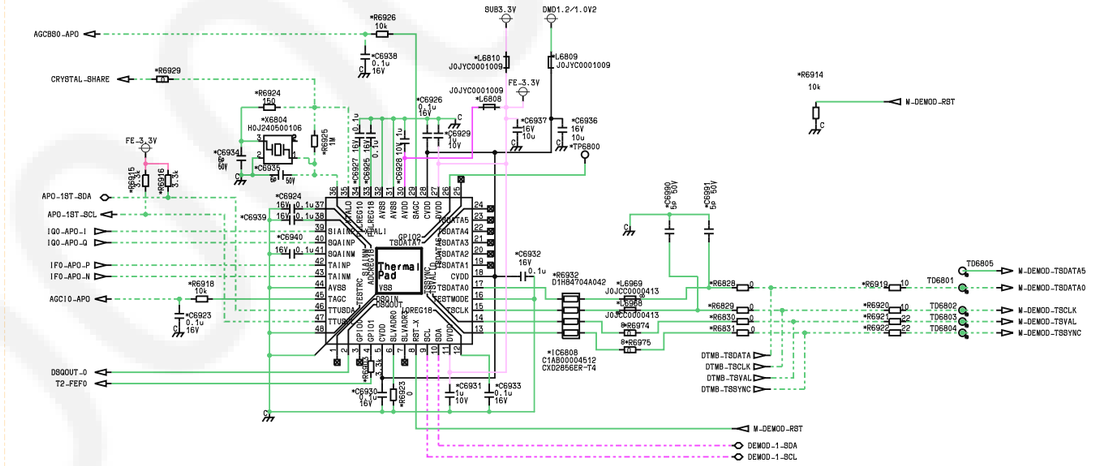

R S T U V W X Y Z AA AB AC AD AE AF AG AH

1 2 3 4 5 6 7 8 9 10 11 12

⚠ A-BOARD (26/26)

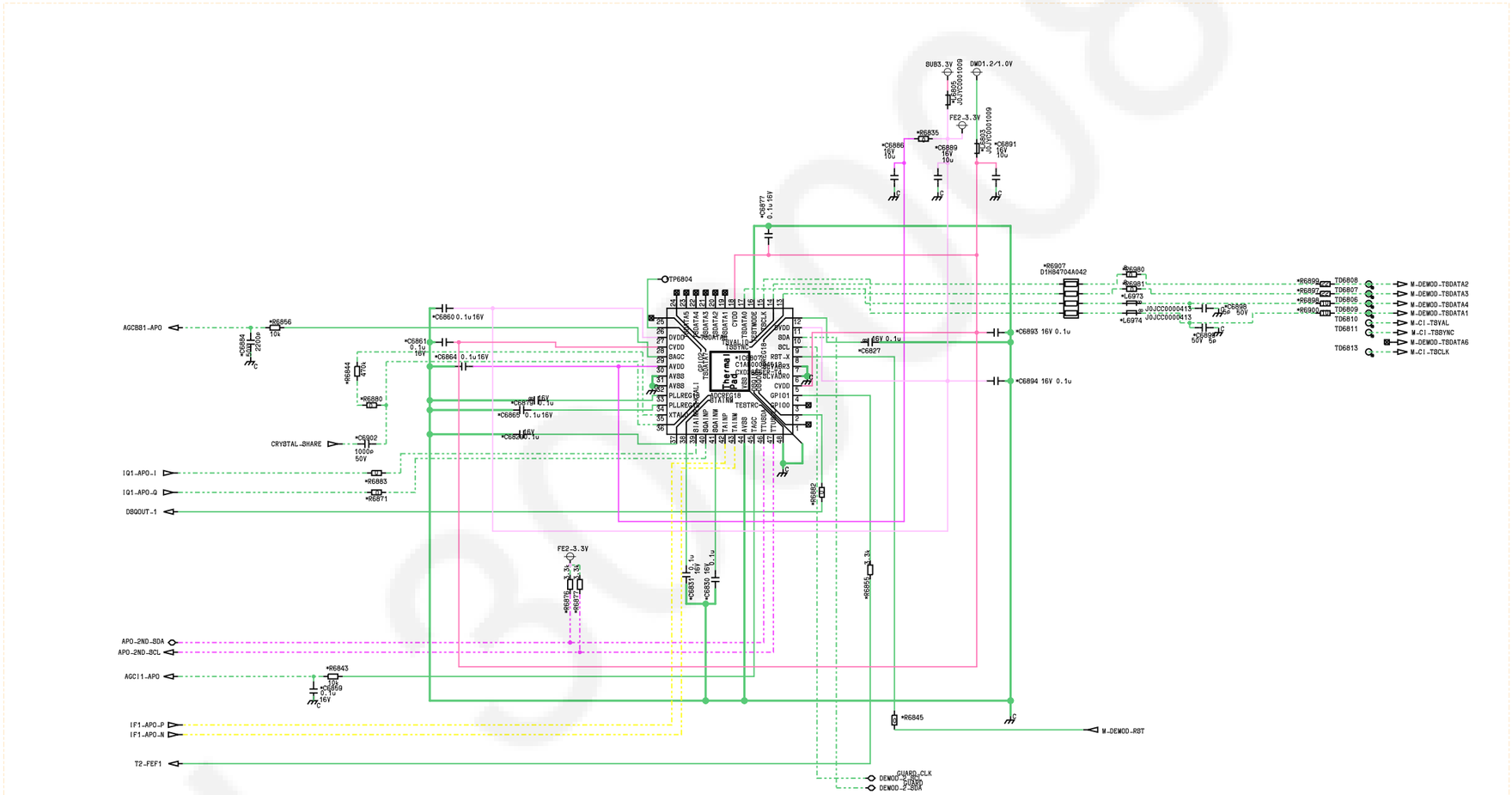

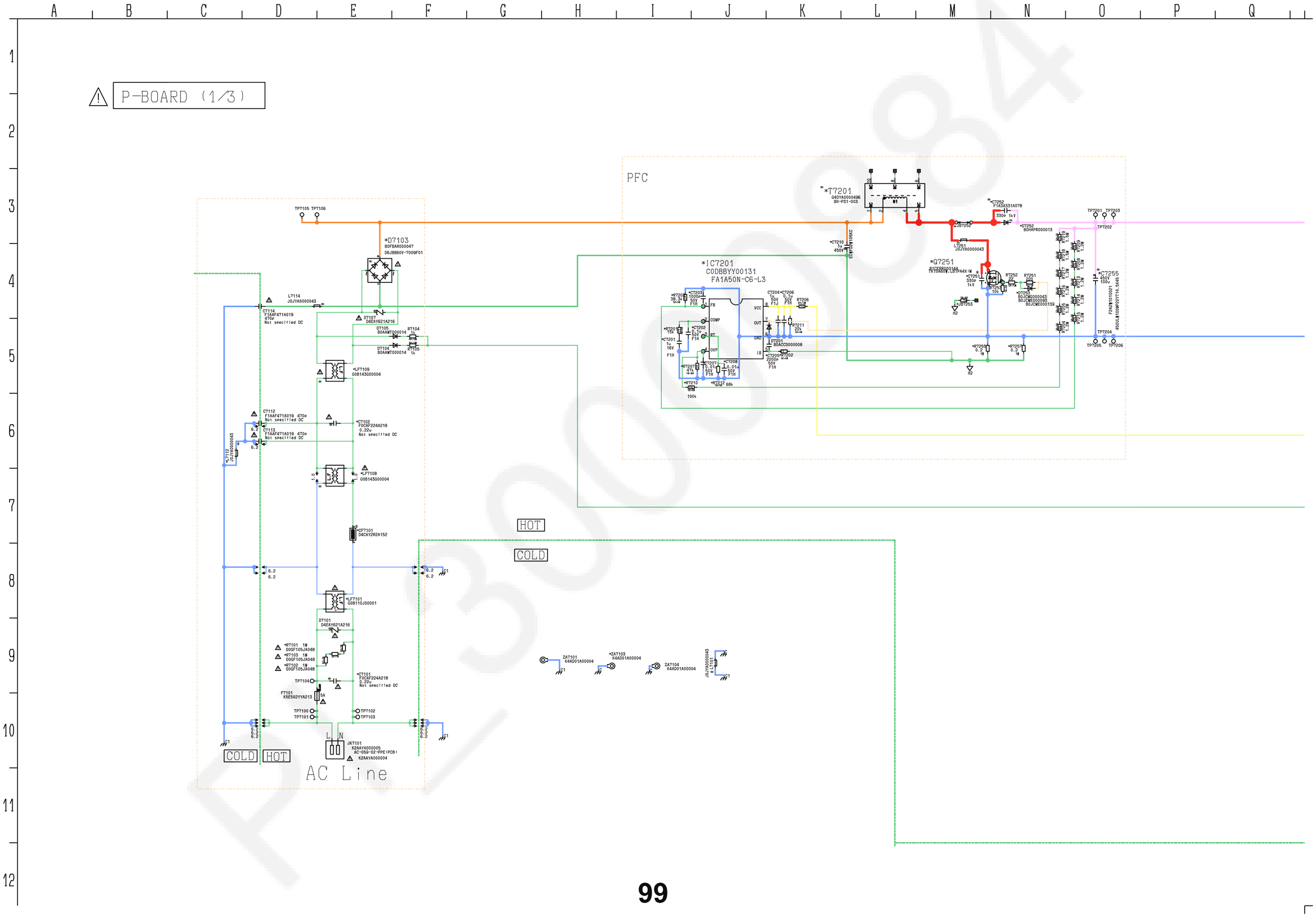
P-BOARD (1/3)
PFC
*T7201
*IC7201
C0DBBYY00131
FA1A50N-C6-L3
*Q7251
*D7103
HOT
COLD
COLD
HOT
AC Line

P-BOARD (2/3)

HOT | COLD

LLC Pri

LLC Sec

T7301

IC7301
C0DBAYY02736
FA6B02N-C6-L3

IC7401
C0DBZYY00531
MM1431GNRE(R59-L471)

IC7491
B1LBZ0000070
BD9E102FJ-GE2

BL 64V

GND

16V

5V

STB5V DCDC

AI AJ AK AL AM AN AO AP AQ AR AS AT AU AV AW AX

1 2 3 4 5 6 7 8 9 10 11 12

⚠ P-BOARD (3/3)

LED Driver

Q7806 B1CHRL000026
Q7805 B1CHRL000026
Q7804 B1ABCN000014 B1ABCN000007
Q7801 B1ABCE000015 B1ABCP000173
Q7803 B1ABCN000014
Q7802 B1ABCE000015 B1ABCP000173
Q7888 B1ADPG000002
Q7881 B1ADPG000002
Q7886 B1ADPG000002
Q7883 B1ADPG000002
Q7884 B1ADPG000002
Q7885 B1ADPG000002
Q7882 B1ADPG000002
Q7887 B1ADPG000002

IC7860 C0ZBZ0002596 UCC27517DBVR
IC7800 C0ZBZ0002164 BD9479FV-GE2

L7851 C0C360K00001 SH-P23-023
L7853 J0JYA0000043
L7810 J0JYA0000043
*D7851 B0JBBM000009 WBRF20U20CTA-FUP/PED
*Q7851 B1CERW000066 P13P28HP2-6009F11
*L7852 J0JYC0000729
*Q7852 B0JCMG000043 B0JCME000093 B0JCME000139
REG50 B0ACCD000008
B0ACCD000008
VJ7801
C7855 160V 68u
C7860 2200p 50V F1H
C7801 25V 1u F1J
C7812 25V 1u F1J
C7960 25V 1u F1J
C7853 50V 470p F1H
C7861 50V 1000p F1H
C7858 250V 1000p F1J
C7859 250V 1000p F1J
C7856 250V 0.01u F1J
C7852 630V 220p
C7851 630V 220p
C7807 0.22u 16V F1H
C7808 0.47u 16V
C7809 1000p 50V F1H
C7814 4.7u 35V
C7817 10u
C7818 25V 1u F1J
C7847 25V 1u F1J
C7848 25V 1u F1J
C7845 25V 1u F1J
C7846 25V 1u F1J
C7815 25V 1u F1J
C7814 25V 1u F1J
C7436 0.1u 50V F1H
C742550V 1000p F1H
C7429 1000p 50V F1H
C7430 1000p 50V F1H
C7435 1000p 50V F1H
C7437 1000p 50V
C7879 1000p 50V F1H
C7821 1000p 50V F1H
C7887 1000p 50V F1H
C7822 250V 0.01u
C7890 10u 16V
C7891 1u 50V
C7892 1u 50V
C7893 1u 50V
C7894 1u 50V
C7895 1u 50V
C7896 1u 50V
C7897 1u 50V
C7898 1u 50V
C7899 1u 50V
C7900 1u 50V
C7901 1u 50V
C7902 1u 50V
C7903 1u 50V
C7904 1u 50V
C7905 1u 50V
C7906 1u 50V
C7907 1u 50V
C7908 1u 50V
R7860 220k
R7861 220k
R7862 220k
R7863 47k
R7909 100k
R7910 100k
R7845 39k
R7846 100k
R7847 39k
R7848 100k
R7849 10k
R7843 47k
R7851 0.22 1/4W
R7853 0.22 1/4W
R7855 0.22 1/4W
R7856 10k
R7836 180k
R7837 180k
R7838 150k
R7839 150k
R7864 22k
R7865 22k
R7833 22k
R7834 22k
R7835 10k
R7840 100k 1/4W
R7841 10k
R7842 47k
R7859 180k
R7831 10k
R7832 47k
R7811 33k
R7812 18k
R7813 8.2k
R7819 47
R7820 100k
R7817 10k
R7870 10k
R7871 10k
R7872 10k
R7873 10k
R7874 10k
R7875 10k
R7876 10k
R7877 10k
R7878 10k
R7879 10k
R7880 10k
R7881 10k
R7882 10k
R7883 10k
R7884 10k
R7885 10k
R7886 10k
R7887 10k
R7888 10k
R7889 10k
R7890 10k
R7891 10k
R7892 10k
R7893 10k
R7894 10k
R7895 10k
R7896 10k
R7897 10k
R7898 10k
R7899 10k
R7900 10k
R7901 10k
R7902 10k
R7903 10k
R7904 10k
R7905 10k
R7906 10k
R7907 10k
R7908 10k
R7909 10k
R7910 10k
R7911 10k
R7912 10k
R7913 10k
R7914 10k
R7915 10k
R7916 10k
R7917 10k
R7918 10k
R7919 10k
R7920 10k
R7921 10k
R7922 10k
R7923 10k
R7924 10k
R7925 10k
R7926 10k
R7927 10k
R7928 10k
R7929 10k
R7930 10k
R7931 10k
R7932 10k
R7933 10k
R7934 10k
R7935 10k
R7936 10k
R7937 10k
R7938 10k
R7939 10k
R7940 10k
R7941 10k
R7942 10k
R7943 10k
R7944 10k
R7945 10k
R7946 10k
R7947 10k
R7948 10k
R7949 10k
R7950 10k
R7951 10k
R7952 10k
R7953 10k
R7954 10k
R7955 10k
R7956 10k
R7957 10k
R7958 10k
R7959 10k
R7960 10k
R7961 10k
R7962 10k
R7963 10k
R7964 10k
R7965 10k
R7966 10k
R7967 10k
R7968 10k
R7969 10k
R7970 10k
R7971 10k
R7972 10k
R7973 10k
R7974 10k
R7975 10k
R7976 10k
R7977 10k
R7978 10k
R7979 10k
R7980 10k
R7981 10k
R7982 10k
R7983 10k
R7984 10k
R7985 10k
R7986 10k
R7987 10k
R7988 10k
R7989 10k
R7990 10k
R7991 10k
R7992 10k
R7993 10k
R7994 10k
R7995 10k
R7996 10k
R7997 10k
R7998 10k
R7999 10k
R8000 10k
R8001 10k
R8002 10k
R8003 10k
R8004 10k
R8005 10k
R8006 10k
R8007 10k
R8008 10k
R8009 10k
R8010 10k
R8011 10k
R8012 10k
R8013 10k
R8014 10k
R8015 10k
R8016 10k
R8017 10k
R8018 10k
R8019 10k
R8020 10k
R8021 10k
R8022 10k
R8023 10k
R8024 10k
R8025 10k
R8026 10k
R8027 10k
R8028 10k
R8029 10k
R8030 10k
R8031 10k
R8032 10k
R8033 10k
R8034 10k
R8035 10k
R8036 10k
R8037 10k
R8038 10k
R8039 10k
R8040 10k
R8041 10k
R8042 10k
R8043 10k
R8044 10k
R8045 10k
R8046 10k
R8047 10k
R8048 10k
R8049 10k
R8050 10k
R8051 10k
R8052 10k
R8053 10k
R8054 10k
R8055 10k
R8056 10k
R8057 10k
R8058 10k
R8059 10k
R8060 10k
R8061 10k
R8062 10k
R8063 10k
R8064 10k
R8065 10k
R8066 10k
R8067 10k
R8068 10k
R8069 10k
R8070 10k
R8071 10k
R8072 10k
R8073 10k
R8074 10k
R8075 10k
R8076 10k
R8077 10k
R8078 10k
R8079 10k
R8080 10k
R8081 10k
R8082 10k
R8083 10k
R8084 10k
R8085 10k
R8086 10k
R8087 10k
R8088 10k
R8089 10k
R8090 10k
R8091 10k
R8092 10k
R8093 10k
R8094 10k
R8095 10k
R8096 10k
R8097 10k
R8098 10k
R8099 10k
R8100 10k
R8101 10k
R8102 10k
R8103 10k
R8104 10k
R8105 10k
R8106 10k
R8107 10k
R8108 10k
R8109 10k
R8110 10k
R8111 10k
R8112 10k
R8113 10k
R8114 10k
R8115 10k
R8116 10k
R8117 10k
R8118 10k
R8119 10k
R8120 10k
R8121 10k
R8122 10k
R8123 10k
R8124 10k
R8125 10k
R8126 10k
R8127 10k
R8128 10k
R8129 10k
R8130 10k
R8131 10k
R8132 10k
R8133 10k
R8134 10k
R8135 10k
R8136 10k
R8137 10k
R8138 10k
R8139 10k
R8140 10k
R8141 10k
R8142 10k
R8143 10k
R8144 10k
R8145 10k
R8146 10k
R8147 10k
R8148 10k
R8149 10k
R8150 10k
R8151 10k
R8152 10k
R8153 10k
R8154 10k
R8155 10k
R8156 10k
R8157 10k
R8158 10k
R8159 10k
R8160 10k
R8161 10k
R8162 10k
R8163 10k
R8164 10k
R8165 10k
R8166 10k
R8167 10k
R8168 10k
R8169 10k
R8170 10k
R8171 10k
R8172 10k
R8173 10k
R8174 10k
R8175 10k
R8176 10k
R8177 10k
R8178 10k
R8179 10k
R8180 10k
R8181 10k
R8182 10k
R8183 10k
R8184 10k
R8185 10k
R8186 10k
R8187 10k
R8188 10k
R8189 10k
R8190 10k
R8191 10k
R8192 10k
R8193 10k
R8194 10k
R8195 10k
R8196 10k
R8197 10k
R8198 10k
R8199 10k
R8200 10k
R8201 10k
R8202 10k
R8203 10k
R8204 10k
R8205 10k
R8206 10k
R8207 10k
R8208 10k
R8209 10k
R8210 10k
R8211 10k
R8212 10k
R8213 10k
R8214 10k
R8215 10k
R8216 10k
R8217 10k
R8218 10k
R8219 10k
R8220 10k
R8221 10k
R8222 10k
R8223 10k
R8224 10k
R8225 10k
R8226 10k
R8227 10k
R8228 10k
R8229 10k
R8230 10k
R8231 10k
R8232 10k
R8233 10k
R8234 10k
R8235 10k
R8236 10k
R8237 10k
R8238 10k
R8239 10k
R8240 10k
R8241 10k
R8242 10k
R8243 10k
R8244 10k
R8245 10k
R8246 10k
R8247 10k
R8248 10k
R8249 10k
R8250 10k
R8251 10k
R8252 10k
R8253 10k
R8254 10k
R8255 10k
R8256 10k
R8257 10k
R8258 10k
R8259 10k
R8260 10k
R8261 10k
R8262 10k
R8263 10k
R8264 10k
R8265 10k
R8266 10k
R8267 10k
R8268 10k
R8269 10k
R8270 10k
R8271 10k
R8272 10k
R8273 10k
R8274 10k
R8275 10k
R8276 10k
R8277 10k
R8278 10k
R8279 10k
R8280 10k
R8281 10k
R8282 10k
R8283 10k
R8284 10k
R8285 10k
R8286 10k
R8287 10k
R8288 10k
R8289 10k
R8290 10k
R8291 10k
R8292 10k
R8293 10k
R8294 10k
R8295 10k
R8296 10k
R8297 10k
R8298 10k
R8299 10k
R8300 10k
R8301 10k
R8302 10k
R8303 10k
R8304 10k
R8305 10k
R8306 10k
R8307 10k
R8308 10k
R8309 10k
R8310 10k
R8311 10k
R8312 10k
R8313 10k
R8314 10k
R8315 10k
R8316 10k
R8317 10k
R8318 10k
R8319 10k
R8320 10k
R8321 10k
R8322 10k
R8323 10k
R8324 10k
R8325 10k
R8326 10k
R8327 10k
R8328 10k
R8329 10k
R8330 10k
R8331 10k
R8332 10k
R8333 10k
R8334 10k
R8335 10k
R8336 10k
R8337 10k
R8338 10k
R8339 10k
R8340 10k
R8341 10k
R8342 10k
R8343 10k
R8344 10k
R8345 10k
R8346 10k
R8347 10k
R8348 10k
R8349 10k
R8350 10k
R8351 10k
R8352 10k
R8353 10k
R8354 10k
R8355 10k
R8356 10k
R8357 10k
R8358 10k
R8359 10k
R8360 10k
R8361 10k
R8362 10k
R8363 10k
R8364 10k
R8365 10k
R8366 10k
R8367 10k
R8368 10k
R8369 10k
R8370 10k
R8371 10k
R8372 10k
R8373 10k
R8374 10k
R8375 10k
R8376 10k
R8377 10k
R8378 10k
R8379 10k
R8380 10k
R8381 10k
R8382 10k
R8383 10k
R8384 10k
R8385 10k
R8386 10k
R8387 10k
R8388 10k
R8389 10k
R8390 10k
R8391 10k
R8392 10k
R8393 10k
R8394 10k
R8395 10k
R8396 10k
R8397 10k
R8398 10k
R8399 10k
R8400 10k
R8401 10k
R8402 10k
R8403 10k
R8404 10k
R8405 10k
R8406 10k
R8407 10k
R8408 10k
R8409 10k
R8410 10k
R8411 10k
R8412 10k
R8413 10k
R8414 10k
R8415 10k
R8416 10k
R8417 10k
R8418 10k
R8419 10k
R8420 10k
R8421 10k
R8422 10k
R8423 10k
R8424 10k
R8425 10k
R8426 10k
R8427 10k
R8428 10k
R8429 10k
R8430 10k
R8431 10k
R8432 10k
R8433 10k
R8434 10k
R8435 10k
R8436 10k
R8437 10k
R8438 10k
R8439 10k
R8440 10k
R8441 10k
R8442 10k
R8443 10k
R8444 10k
R8445 10k
R8446 10k
R8447 10k
R8448 10k
R8449 10k
R8450 10k
R8451 10k
R8452 10k
R8453 10k
R8454 10k
R8455 10k
R8456 10k
R8457 10k
R8458 10k
R8459 10k
R8460 10k
R8461 10k
R8462 10k
R8463 10k
R8464 10k
R8465 10k
R8466 10k
R8467 10k
R8468 10k
R8469 10k
R8470 10k
R8471 10k
R8472 10k
R8473 10k
R8474 10k
R8475 10k
R8476 10k
R8477 10k
R8478 10k
R8479 10k
R8480 10k
R8481 10k
R8482 10k
R8483 10k
R8484 10k
R8485 10k
R8486 10k
R8487 10k
R8488 10k
R8489 10k
R8490 10k
R8491 10k
R8492 10k
R8493 10k
R8494 10k
R8495 10k
R8496 10k
R8497 10k
R8498 10k
R8499 10k
R8500 10k
R8501 10k
R8502 10k
R8503 10k
R8504 10k
R8505 10k
R8506 10k
R8507 10k
R8508 10k
R8509 10k
R8510 10k
R8511 10k
R8512 10k
R8513 10k
R8514 10k
R8515 10k
R8516 10k
R8517 10k
R8518 10k
R8519 10k
R8520 10k
R8521 10k
R8522 10k
R8523 10k
R8524 10k
R8525 10k
R8526 10k
R8527 10k
R8528 10k
R8529 10k
R8530 10k
R8531 10k
R8532 10k
R8533 10k
R8534 10k
R8535 10k
R8536 10k
R8537 10k
R8538 10k
R8539 10k
R8540 10k
R8541 10k
R8542 10k
R8543 10k
R8544 10k
R8545 10k
R8546 10k
R8547 10k
R8548 10k
R8549 10k
R8550 10k
R8551 10k
R8552 10k
R8553 10k
R8554 10k
R8555 10k
R8556 10k
R8557 10k
R8558 10k
R8559 10k
R8560 10k
R8561 10k
R8562 10k
R8563 10k
R8564 10k
R8565 10k
R8566 10k
R8567 10k
R8568 10k
R8569 10k
R8570 10k
R8571 10k
R8572 10k
R8573 10k
R8574 10k
R8575 10k
R8576 10k
R8577 10k
R8578 10k
R8579 10k
R8580 10k
R8581 10k
R8582 10k
R8583 10k
R8584 10k
R8585 10k
R8586 10k
R8587 10k
R8588 10k
R8589 10k
R8590 10k
R8591 10k
R8592 10k
R8593 10k
R8594 10k
R8595 10k
R8596 10k
R8597 10k
R8598 10k
R8599 10k
R8600 10k
R8601 10k
R8602 10k
R8603 10k
R8604 10k
R8605 10k
R8606 10k
R8607 10k
R8608 10k
R8609 10k
R8610 10k
R8611 10k
R8612 10k
R8613 10k
R8614 10k
R8615 10k
R8616 10k
R8617 10k
R8618 10k
R8619 10k
R8620 10k
R8621 10k
R8622 10k
R8623 10k
R8624 10k
R8625 10k
R8626 10k
R8627 10k
R8628 10k
R8629 10k
R8630 2.2
R8631 10k
R8632 10k
R8633 10k
R8634 10k
R8635 10k
R8636 10k
R8637 10k
R8638 10k
R8639 10k
R8640 10k
R8641 10k
R8642 10k
R8643 10k
R8644 10k
R8645 10k
R8646 10k
R8647 10k
R8648 10k
R8649 10k
R8650 10k

⚠ K-BOARD

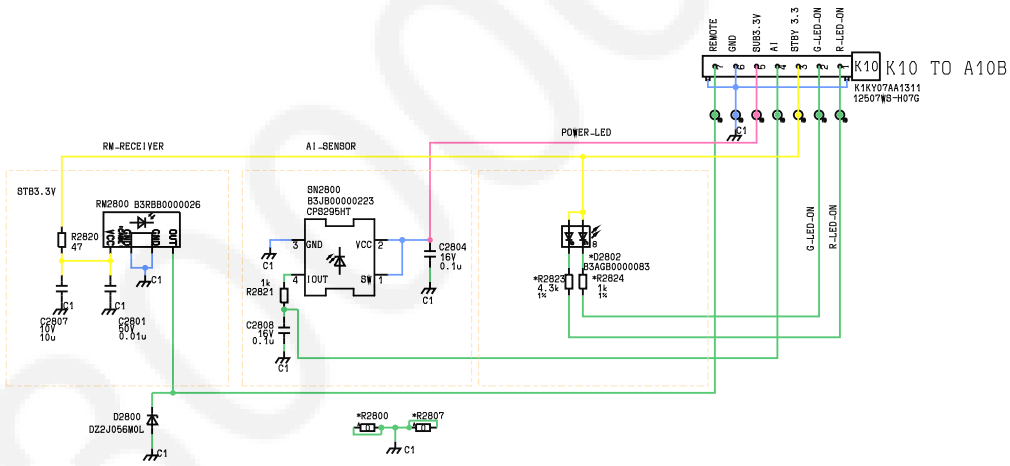
REMOTE
GND
SUB3.3V
A1
STBY 3.3
G-LED-ON
R-LED-ON
K10
K10 TO A10B
K1KY07AA1311
12507WB-H07G
RM-RECEIVER
A1-SENSOR
POWER-LED
STB3.3V
RM2800 B3RBB0000026
R2820
47
C2807
16V
10u
C2801
50V
0.01u
SN2800
B3JB00000223
CPS295HT
GND
VCC
OUT
SW
C2804
16V
0.1u
R2821
1k
C2808
16V
0.1u
*D2802
B3AGB0000083
*R2823
4.3k
*R2824
1k
D2800
DZ2J056M0L
*R2800
*R2807
C1

⚠ GK-BOARD

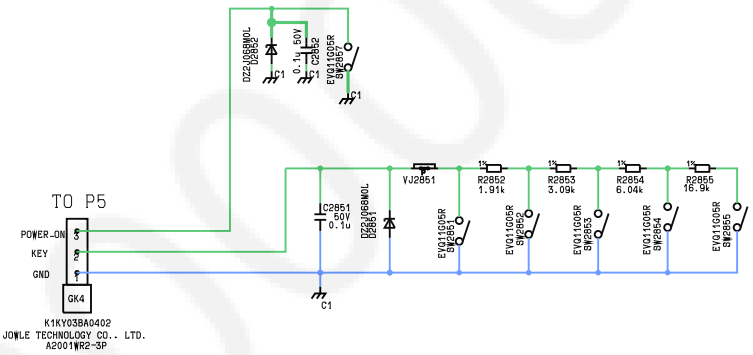

P1300884

Conductor Views

A-BOARD - TOP

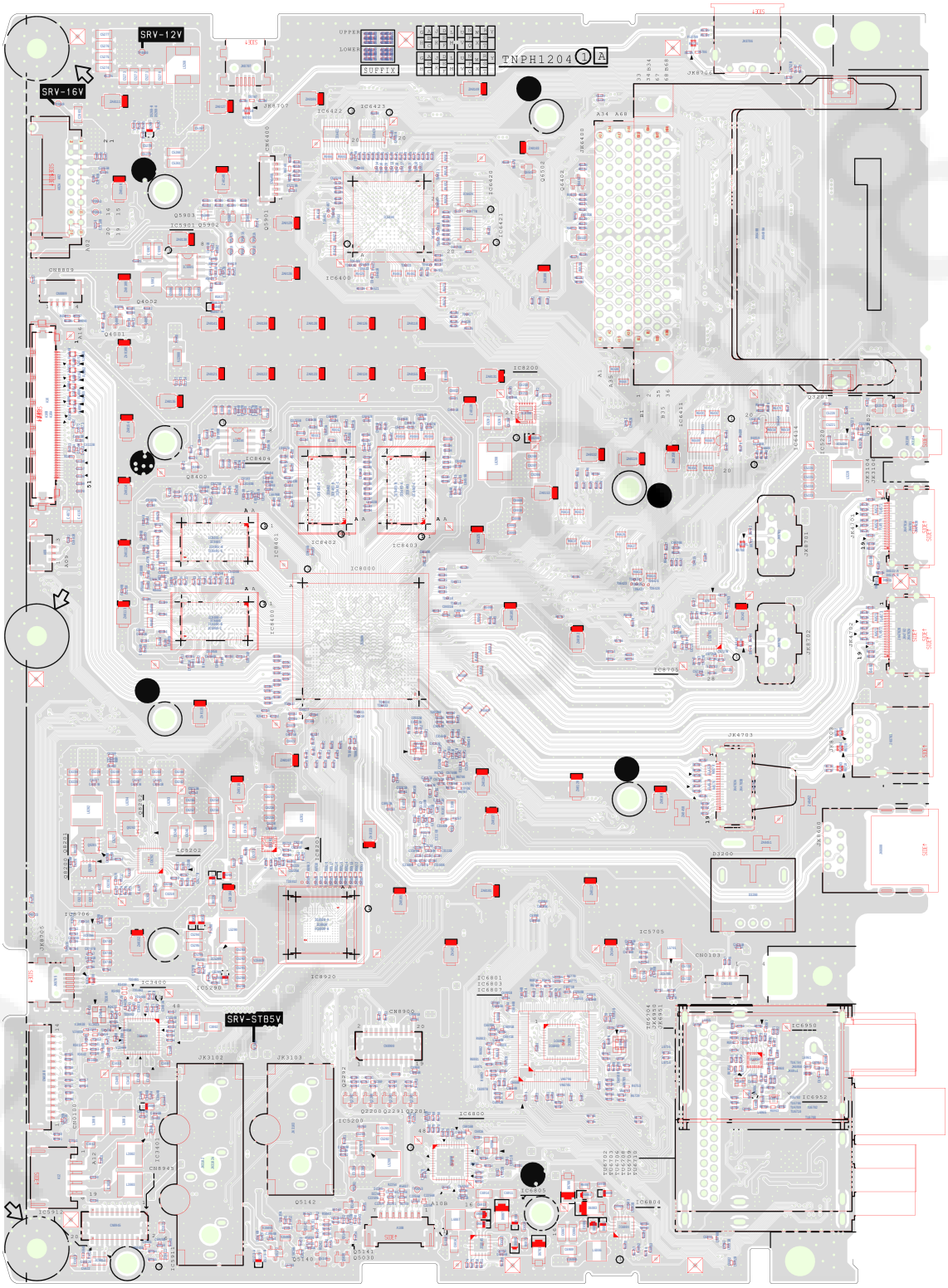

A-BOARD - BOTTOM

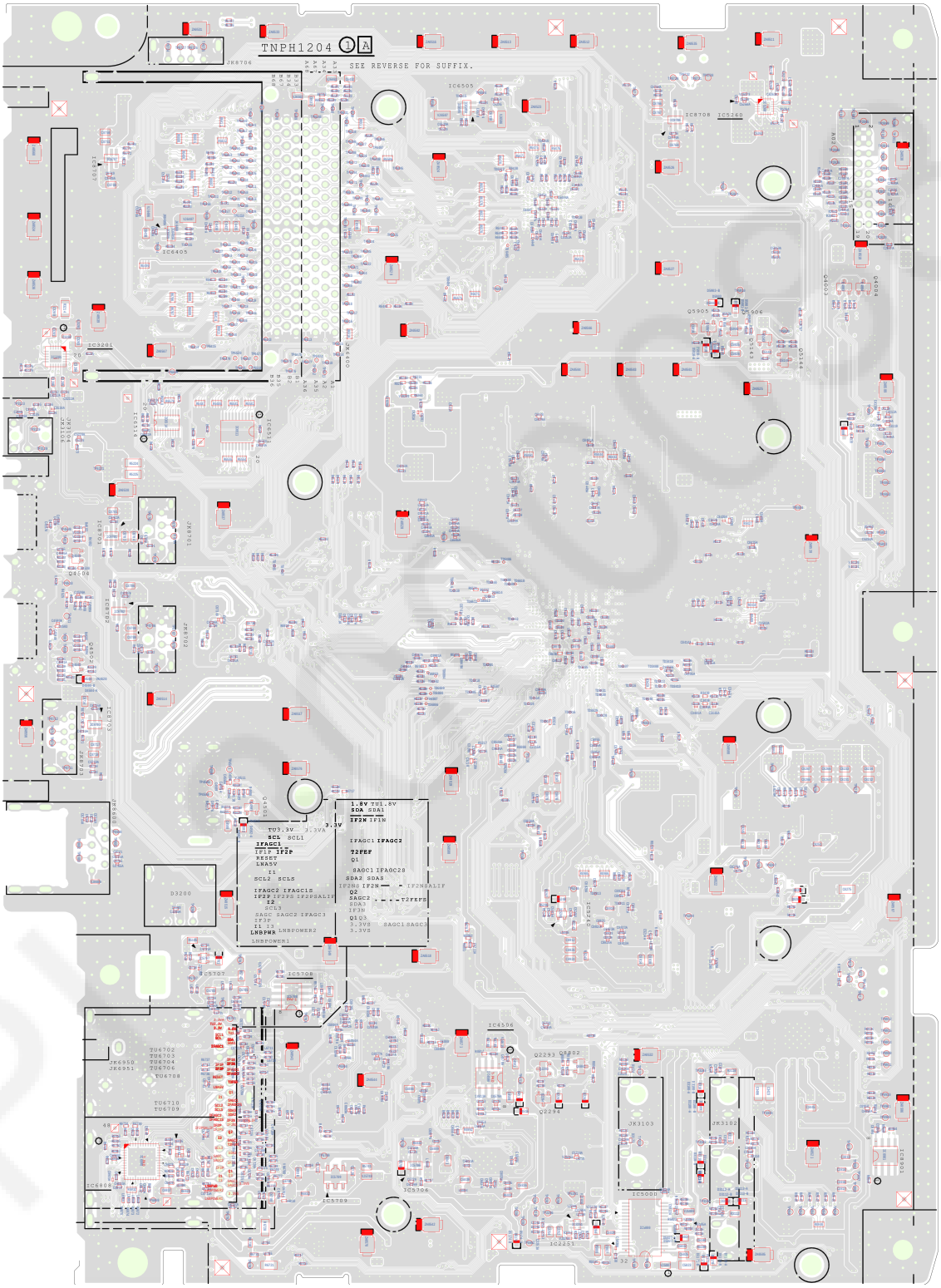

P-BOARD - TOP

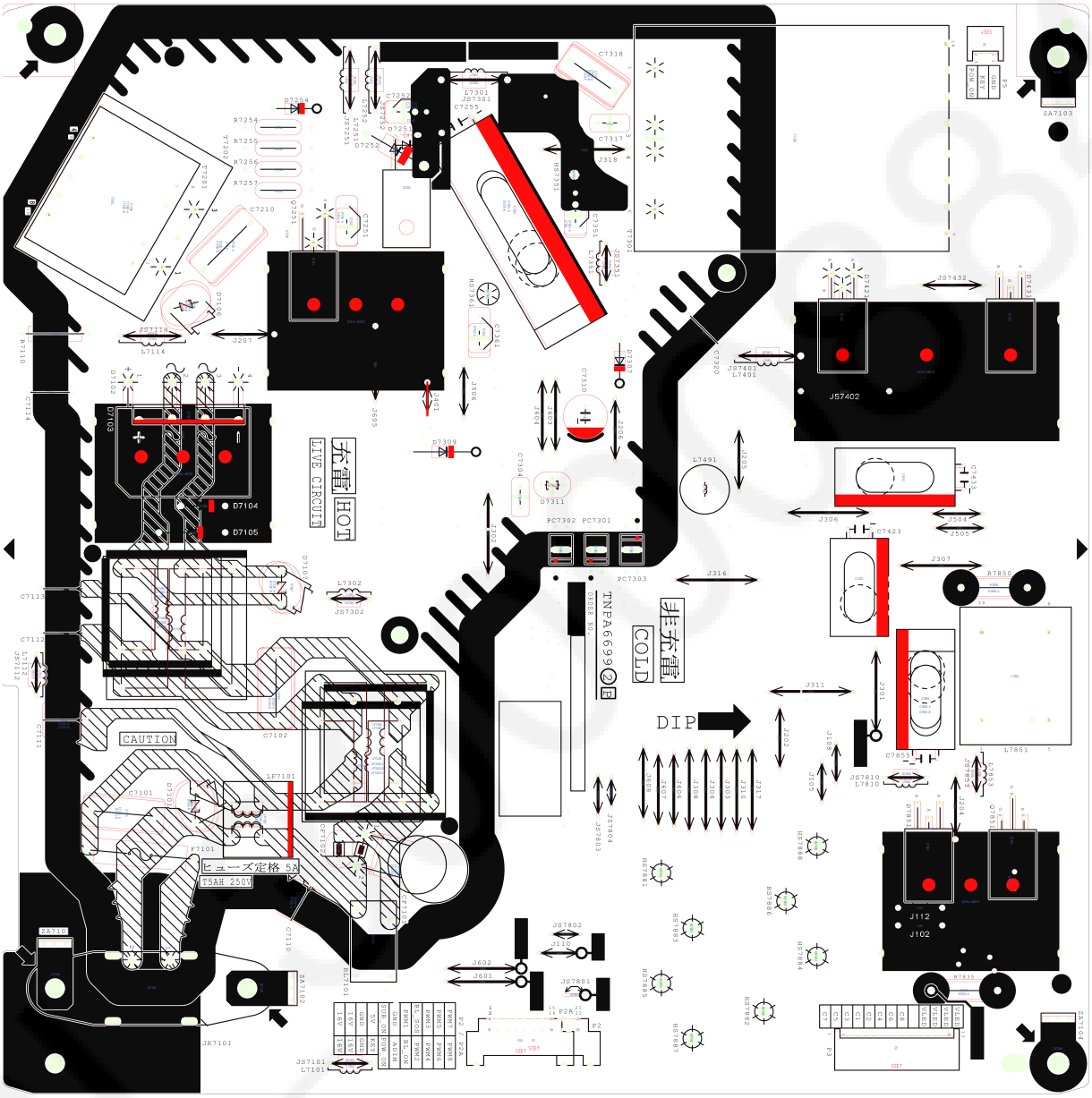
CAUTION
ヒューズ定格 5A
125AH 250V
DIP
COLD
非充電
HOT
充電
LIVE CIRCUIT
TNPA6699
D7104
D7105
J112
J102
JS7402

P-BOARD - BOTTOM

K-BOARD - TOP

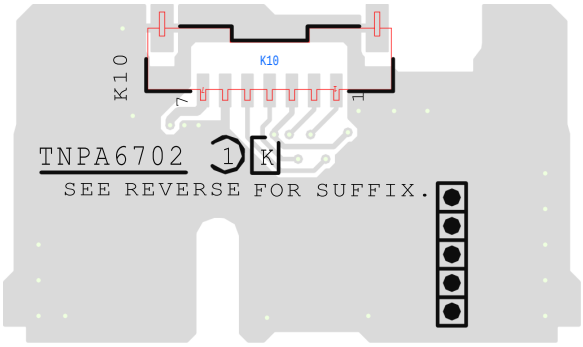

K-BOARD - BOTTOM

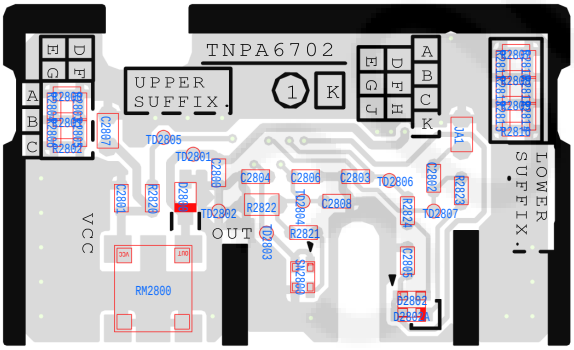

PL0008084

GK-BOARD - TOP

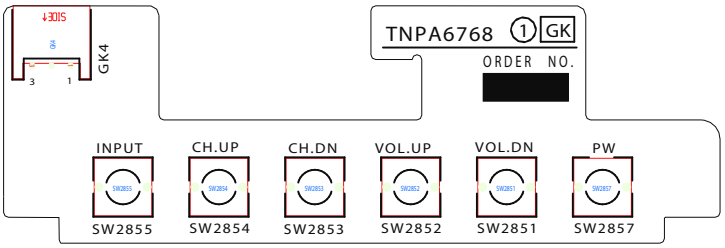

GK-BOARD - BOTTOM

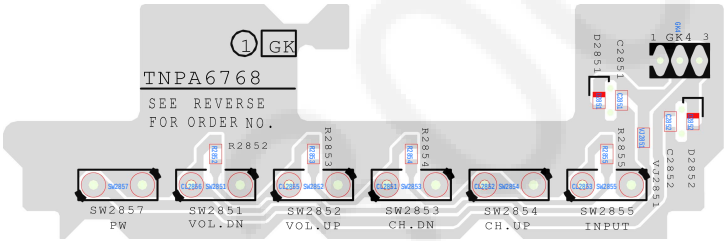

PL9000884