CAT 31

ORDER NO. VRD9704005C2

Service Manual

Video Cassette Recorder

Panasonic VHS PAL

Hi-Fi HQ

General Description
Adjustment Procedures
Block / Schematic Diagrams
Exploded Views / Parts List

NV-HD620 EG/EGH B/BL/EC

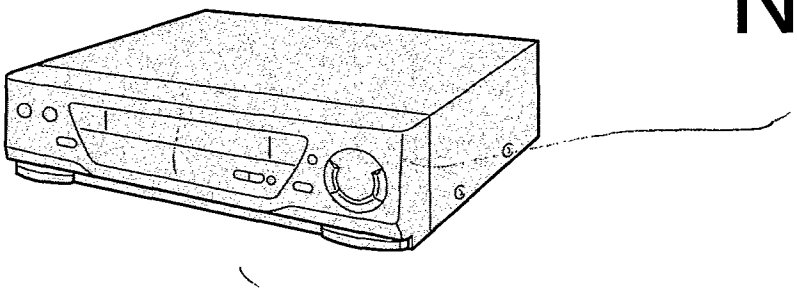

K-MECHANISM

SPECIFICATIONS

ITEM	SPECIFICATION	
POWER	SOURCE: 220—240 V AC 50/60 Hz	
	CONSUMPTION: 21 watts (NV-HD620EG/EGH) 22 watts (NV-HD620B/BL/EC)	
RECORDING SYSTEM	2 rotary heads, helical scanning system	
	PAL	
TV TUNER SYSTEM	NV-HD620 EG/EGH	VHF I: CHN1—CHS10 VHF III: CHE5—CHS41 (PAL/SECAM B) UHF: CH21—CH69 (PAL/SECAM G) 75Ω terminated
	NV-HD620B	UHF: CH21—CH69 (PAL I) 75Ω terminated
	NV-HD620BL	VHF I: CHA—CHC VHF III: CHD—CHJ (PAL I) UHF: CH21—CH69 (PAL I) 75Ω terminated
	NV-HD620EC	VHF I: CHE2—CHS3 VHF II: CHM1—CHM9 VHF III: CHM10—CHU2 VHF H: CHU3—CHS41 (PAL/SECAM B) UHF: CH21—CH69 (PAL/SECAM G) 75Ω terminated
RF OUT SYSTEM	NV-HD620 EG/EGH/EC	UHF: CH21-CH69 (PAL/SECAM G) 71±3dBμ, 75Ω terminated
	NV-HD620B/BL	UHF: CH21-CH69 (PAL I) 71±3 dBμ, 75Ω terminated
VIDEO	HEADS: 4 rotary heads 1 pair for recording and playback (L-R heads) 1 pair for trick play (L'-R' heads)	

ITEM	SPECIFICATION
VIDEO	INPUT: EURO AV Connector (21 pin×2) 1.0 Vp-p, 75Ω unbalanced
	OUTPUT: EURO AV Connector (21 pin×2) 1.0 Vp-p, 75Ω unbalanced
AUDIO	HEAD: 1 Stationary head (Normal-mono only) 2 channels (Hi-Fi Sound-Stereo)
	INPUT: EURO AV Connector (21 pin×2) More than −6 dBV (500 mV), 10 kΩ
	OUTPUT: AUDIO OUT Connector (Phono type) −6 dBV (500 mV), Less than 1 kΩ EURO AV Connector (21 pin×2) −6 dBV (500 mV), Less than 1 kΩ
TAPE SPEED	SP: 23.39 mm/s LP: 11.695 mm/s Record/Playback Time: SP: 4 hours with 240 min. type tape LP: 8 hours with 240 min. type tape FF/REW Time: 2.5 min. with 180 min. type tape
OPERATING TEMPERATURE	5°C—40°C
OPERATING HUMIDITY	35%—80%
DIMENSIONS	430 (W)×99.9 (H)×319.5 (D) mm
WEIGHT	4.6 kg
STANDARD ACCESSORIES	1 pc. DIN-RF Cable 1 pc. AC Mains Lead 1 pc. Infra-res Remote Controller

Weight and dimensions shown are approximate.
Specifications are subject to change without notice.

Panasonic

© 1997 Matsushita Electric Industrial Co., Ltd.
All rights reserved. Unauthorized copying and distribution is a violation of law.

⚠ WARNING

This service information is designed for experienced repair technicians only and is not designed for use by the general public. It does not contain warnings or cautions to advise non-technical individuals of potential dangers in attempting to service a product. Products powered by electricity should be serviced or repaired only by experienced professional technicians. Any attempt to service or repair the product or products dealt with in this service information by anyone else could result in serious injury or death.

INTRODUCTION

This service manual contains technical information which will allow service personnels to understand and service this model.
Section 1 presents you with technical know how for actual servicing and general information of features and controls, enabling you to become familiar with each function.
Section 2 presents to your mechanical and electrical adjustment information as well disassembly and replacement procedures.
In the case of very common information relating to other models like mechanical adjustments, please refer to the appropriate service manual.
Section 3 contains block diagrams which provides you with information for checking and understanding each circuit. Schematic diagrams which give you detailed information such as waveforms, voltage data, function e.t.c. ...
Section 4 contains exploded views and parts list.
Please place orders using the parts list and not the drawing reference numbers.
If the circuit is changed or modified, this information will be followed by supplementary service manual to be filed with original service manual.

Note 1: Adjustment procedures, Disassembly Procedures and Assembly Procedures for Mechanism Chassis are separate volume from this service manual.
Please refer to the service manual for K-Mechanism Chassis. (Order No. VRD9307M131)

Note 2: The Model No. is indicated on the Schematic Diagram and Circuit Board Diagrams as follows.

Model No.	NV-HD620EG	NV-HD620EGH	NV-HD620B	NV-HD620BL	NV-HD620EC
Indication Mark	(A)	(B)	(C)	(D)	(E)

CONTENTS

SECTION 1
GENERAL DESCRIPTIONS

1-1. SERVICE INFORMATION 1-1
1-2. SELF-TEST INDICATION DISPLAY 1-6
1-3. SERVICE INFORMATION DISPLAY 1-7
1-4. OPERATING INSTRUCTIONS 1-12

SECTION 2
ADJUSTMENT PROCEDURES

2-1. DISASSEMBLY METHOD 2-1
2-2. MECHANICAL ADJUSTMENT PROCEDURES 2-2
2-3. ELECTRICAL ADJUSTMENT PROCEDURES 2-5

SECTION 3
BLOCK DIAGRAMS & SCHEMATIC DIAGRAMS

3-1. ABBREVIATIONS 3-1
3-2. TIMER BLOCK DIAGRAM 3-14
3-3. SYSTEM CONTROL & SERVO BLOCK DIAGRAM 3-15
3-4. LUMINANCE & CHROMINANCE BLOCK DIAGRAM 3-17
3-5. Hi-Fi AUDIO BLOCK DIAGRAM 3-21
3-6. POWER SCHEMATIC DIAGRAM 3-23
3-7. SYSTEM CONTROL & SERVO SECTION IN MAIN SCHEMATIC DIAGRAM 3-25
3-8. MOTOR DRIVE SECTION IN MAIN SCHEMATIC DIAGRAM 3-29
3-9. POWER SUPPLY/RF SECTION IN MAIN SCHEMATIC DIAGRAM 3-31
3-10. LUMINANCE & CHROMINANCE SECTION IN MAIN SCHEMATIC DIAGRAM 3-33
3-11. AUDIO SECTION IN MAIN SCHEMATIC DIAGRAM 3-35
3-12. OSD SECTION IN MAIN SCHEMATIC DIAGRAM 3-37
3-13. LUMINANCE & CHROMINANCE PACK SCHEMATIC DIAGRAM 3-39
3-14. HEAD AMP SCHEMATIC DIAGRAM 3-42
3-15. Hi-Fi AUDIO PACK SCHEMATIC DIAGRAM 3-43
3-16. INPUT/OUTPUT PACK SCHEMATIC DIAGRAM 3-45
3-17. CYLINDER STATOR UNIT SCHEMATIC DIAGRAM 3-48
3-18. OPERATION SCHEMATIC DIAGRAM 3-48
3-19. TIMER SCHEMATIC DIAGRAM 3-49
3-20. NICAM DECODER PACK SCHEMATIC DIAGRAM (NV-HD620B/BL/EC) 3-51
3-21. DECODER PACK SCHEMATIC DIAGRAM (NV-HD620EG/EGH) 3-53
3-22. TV DEMODULATOR PACK SCHEMATIC DIAGRAM 3-54
3-23. POWER C.B.A. 3-55
3-24. CYLINDER STATOR UNIT 3-56
3-25. MAIN C.B.A. 3-57
3-26. LUMINANCE & CHROMINANCE PACK C.B.A. 3-59
3-27. TIMER C.B.A. 3-59
3-28. Hi-Fi AUDIO PACK C.B.A. 3-61
3-29. INPUT/OUTPUT PACK C.B.A. 3-62
3-30. HEAD AMP C.B.A. 3-63
3-31. OPERATION C.B.A. 3-64
3-32. NICAM DECODER PACK C.B.A. (NV-HD620B/BL/EC) 3-65
3-33. DECODER PACK C.B.A. (NV-HD620EG/EGH) 3-66
3-34. TV DEMODULATOR PACK C.B.A. 3-66

SECTION 4
EXPLODED VIEWS & PARTS LIST

4-1. EXPLODED VIEW & MECHANICAL REPLACEMENT PARTS LIST 4-1
4-2. ELECTRICAL REPLACEMENT PARTS LIST 4-8

SECTION 1
GENERAL DESCRIPTIONS

1-1. SERVICE INFORMATION

1-1-1. CHANNEL MEMORY IC INITIALIZATION

When replacing the memory IC7704, its IC should be initialized.

Note:1) It should be performed before tuning.
2) Meaning of "INITIALIZATION" is to make dependency in different models and to distinguish between different features.

How to set the Model Code.

Key operation	FIP Display	TV Monitor
Press the FF and EJECT keys.	0 00 0	None
Press the FF and EJECT keys in twice.	2 00 00	None
Press the EJECT keys for 3 seconds.	2 00	None
Press the CH UP key in twice.	2 2 00	None
Press the Power key.	2 2:00 ↑flashing	Service Mode (See Fig. S2)
Set the Model Code by using 10-key on the Remote Controller Unit. (See Fig. S1)	2 2:00 ↑flashing	Service Mode (See Fig. S2)
(For cancell) Press the Power key.	2 2 00	None
Press the FF and EJECT key several times until normal display.	10:00	None

Model	Code No.
NV-HD620EG/EGH	97
NV-HD620B	105
NV-HD620BL	109
NV-HD620EC	101

Fig. S1 Model Code

Service	
Version: OSD	BAAA0.33
TIMER	V6AJ2. 0
Pos for time reference:	NONE
Last error code:	01
Model code:	129
Clock adjust:	+ 0
VPS/PDC default:	ON depend

Fig. S2 Sample of Service Mode OSD

Caution:
Since the "Clock adjust" and "VPS/PDC default" are future expansion, do not change the initial setting.

1-1-2. SERVICE POSITION

A. CHECKING OF MAIN C.B.A.

When servicing the MAIN C.B.A., take out the MAIN C.B.A. and mechanism from the frame and turn over.

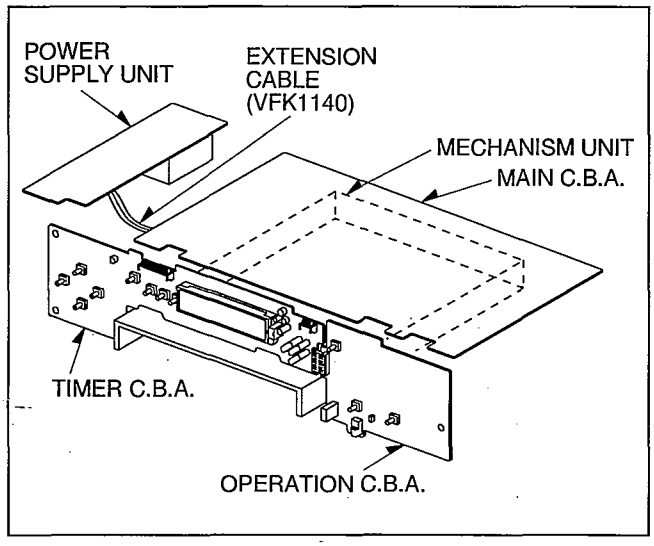

Fig. S3

B. MECHANISM SERVICE POSITION

When servicing the K-Mechanism, take out the mechanism from the MAIN C.B.A. and connect Extention Cable (VFK0889) between the loading-motor connector and P2001 as shown below.
In this position, the following services are possible.

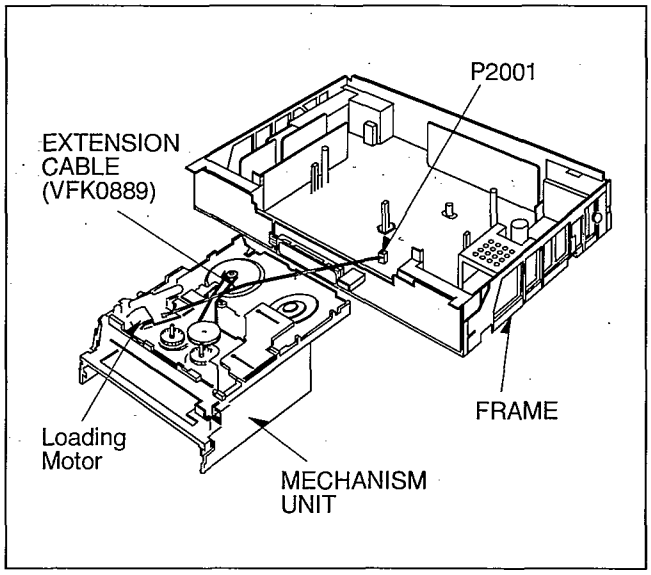

Fig. S4

B-1. CHECKING OF LOADING/UNLOADING OPERATION

There are 3 methods for manual operation of loading/unloading operation as follows.

1. HAND OPERATION
   1) Turn the Worm Gear or the Worm Wheel Gear (Remove the Loading Motor Unit) manually.

2. BATTERY OPERATION
   1) Remove the Extention Cable (VFK0889).
   2) Connect the Battery (Manganes-Type R6 (AA) 3pcs./+4.5V) to the Loading Motor terminals.

3. SERVICE INFORMATION DISPLAY OPERATION
   1) Set the Service Information Display mode.
      Press the FF and EJECT buttons.
   2) Press the FF and EJECT buttons.
   3) In the Service Mode 7, the Loading Motor rotates for Loading operation when the "PLAY" button is pressed.
      The Loading Motor rotates for unloading operation when the "STOP" button is pressed.

Remark:
Use the "SERVICE INFORMATION DISPLAY" mode for a final check of mechanism movement.

B-2. CHECKING OF REEL GEARS OPERATION

1) Move the mechanism to "PLAY" position by loading operation. (Refer to B-1)
2) Turn the Capstan Rotor Unit to check movement of reel gears.

1-1-3. CYLINDER UNIT REPLACEMENT

A. CYLINDER UNIT REPLACEMENT

1) Remove the 3 Screws (A) of the CYLINDER UNIT with a magnetized screw driver in the MECHANISM SERVICE POSITION.

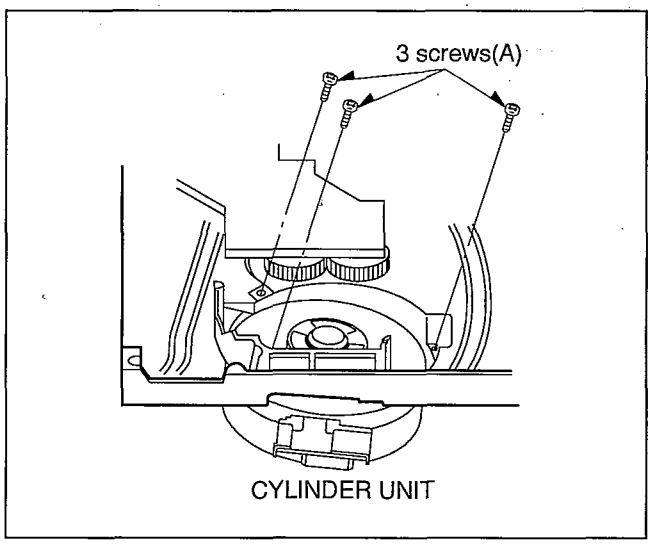

Fig. S5

B. UPPER CYLINDER DISASSEMBLY

1) Remove 2 screws (A).
2) Remove the Cylinder Stator Unit.
3) Remove 2 screws (B).
4) Remote the Cylinder Rotor Unit.
5) Loose hex screw (C) (1.5mm) and remove the Cylinder Retainer.
6) Remove the Upper Cylinder.

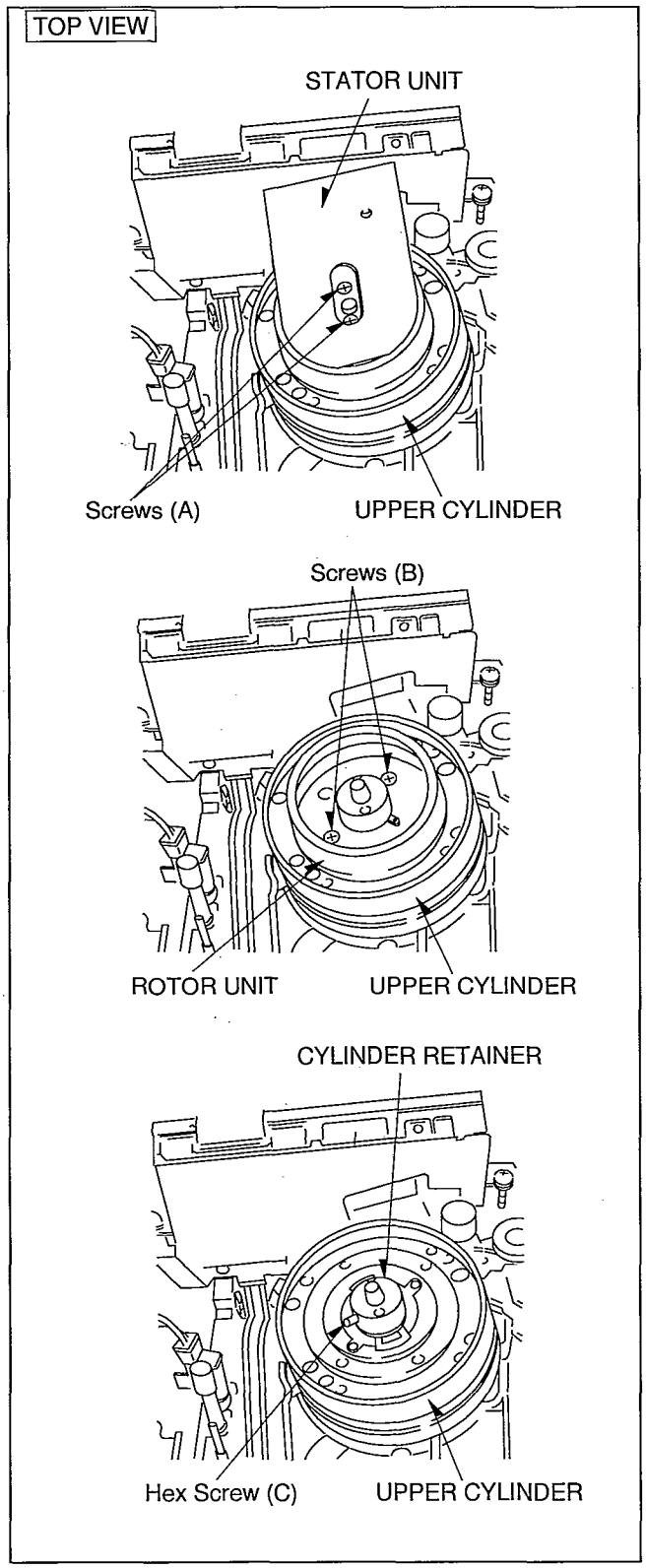

Fig. S6

C. UPPER CYLINDER ASSEMBLY

When reassembling, perform the steps in the reverse order.

1) Install the Cylinder Retainer so that the 2 holes on top of the Cylinder Retainer are at right angles with the Head Amp Shield.
2) Tighten the hex screw (C) (1.5mm) while pressing down on top of the Cylinder Retainer.

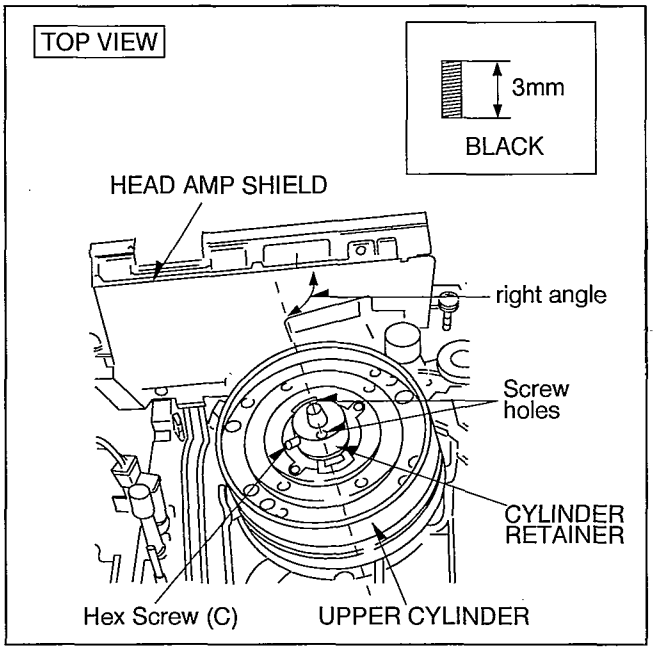

Fig. S7

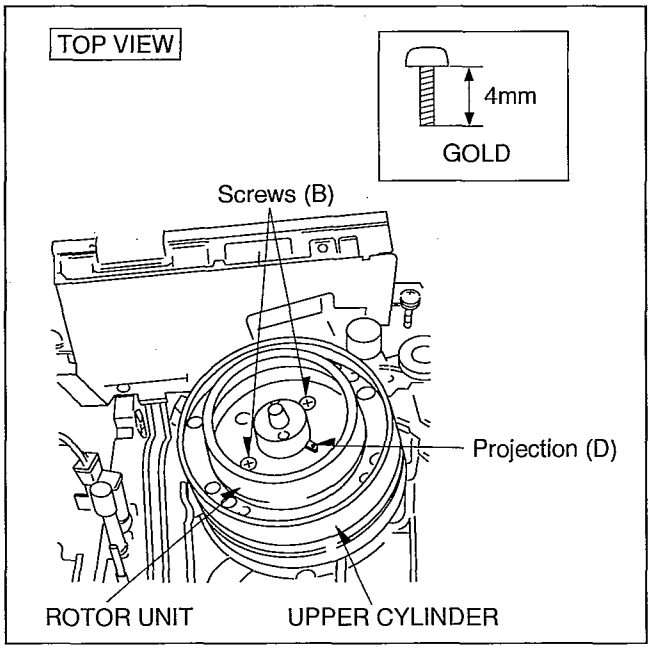

Fig. S8

3) Install the Cylinder Rotor Unit so that the inner hole of the Cylinder Rotor Unit fits to the small projection (D) on top of the Upper Cylinder.
4) Tighten 2 screws (B).
5) Install the Cylinder Stator Unit so that the rear side of the Cylinder Stator C.B.A. is parallel with the Head Amp Shield.
6) Tighten 2 screws (A).
7) Confirm the PG SHIFTER ADJUSTMENT with the alignment tape (PAL: VFJ8125H3F/NTSC: VFM8080HQFP) and adjust it if necessary.

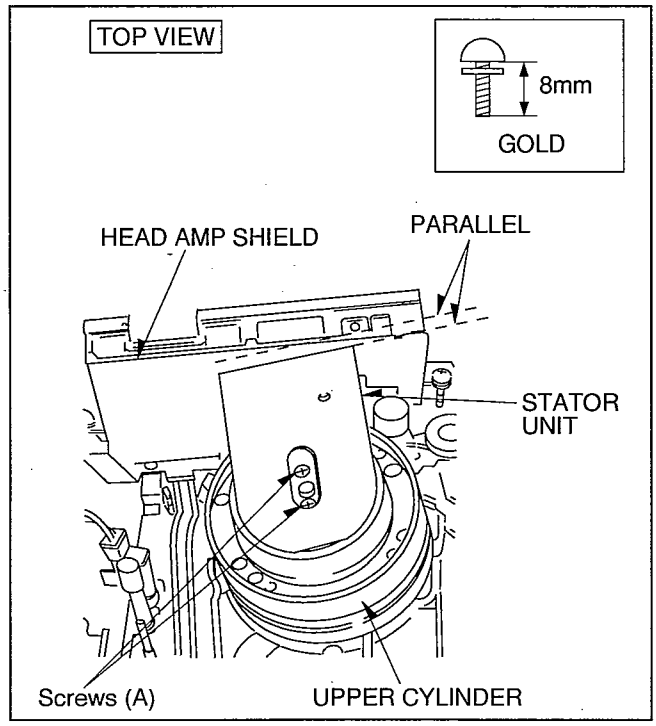

Fig. S9

1-1-4. FLAT CARD CABLE INSTLLATION

When installing the Flat Card Cable on the connector, install the Flat Card Cable with the cable contacts facing the connector contacts.

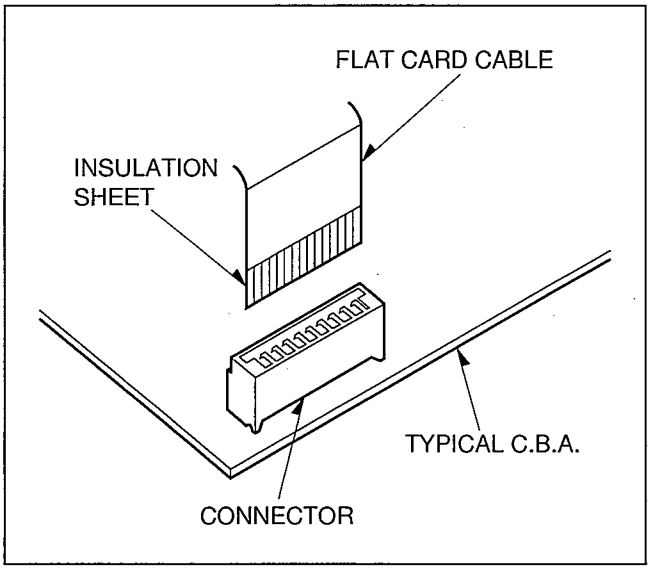

Fig. S10

1-1-5. CAPSTAN STATOR UNIT ASSEMBLY

When replacing the Capstan Stator Unit, the Centre Fixing Tool (VFK0851) must be used to fix the centre of Capstan Stator Unit.

Method:
1) Place the Capstan Stator Unit into position.
2) Loosely tighten the 3 screws.
3) Insert the Centre Fixing Tool (VFK0851) as shown below.
4) Tighten the 3 screws.
5) Remove the Centre Fixing Tool.

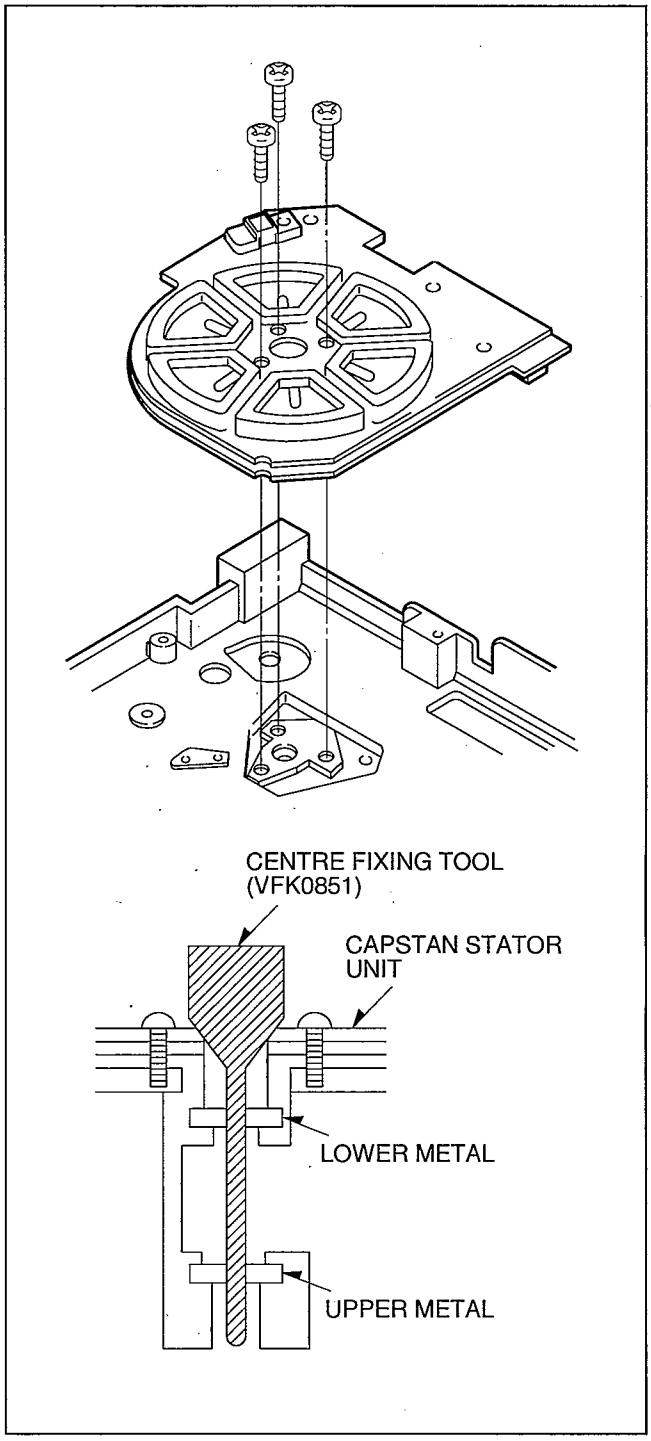

Fig. S11

1-1-6. EJECT OPERATION

The main cam gear rotates in the direction of the arrow. The projection (B) of the carriage connection gear engages with the recession (A) of the main cam gear. The carriage connection gear rotates in the direction of the arrow to perform the Eject operation.

<NOTE>
If the Eject operation is performed without the cassette carriage installed while repairing or making the mechanical phase alignment, the main cam gear will not engage with the carriage connection gear and will not rotate.
To perform the Eject operation with the cassette carriage not installed, it is necessary to rotate the carriage connection gear by hand in the direction of the arrow.

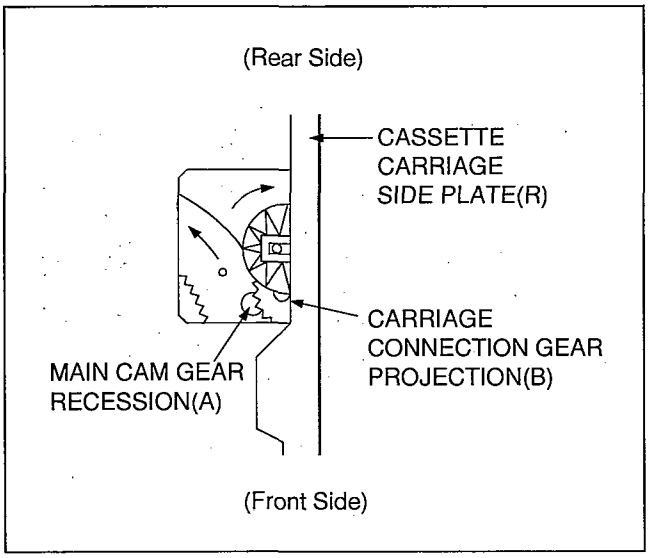

Fig. S12 Top View of Eject Operation

1-1-7. TAKE-UP PHOTO SENSOR OPERATION

Note the following matters for Take-up Photo Sensor Operation.

1) While servicing of the K-Mechanism, the unit will not operate properly if a strong light (ex, Fluorescent light, Spot light) falls on the Take-up Photo Sensor. In this case, cover the Take-up Photo Sensor to prevent the light from falling on it.
2) While servicing of the K-Mechanism with "Power On" and without cassette tape inserted, the Unit does not operate properly.

1-1-8. REMOVAL OF THE CASSETTE TAPE

If the electrical circuit is defective and the action of unloading and front unloading do not work properly, it is possible to remove the cassette manually. There are 2 methods of removing the cassette.

1. HAND OPERATION

1) Take out the mechanism from MAIN C.B.A.
2) Turn the Worm Gear manually, moving the Loading Post to the unloaded position.
3) Turn the Capstan Rotor Unit clockwise to take up the tape.
4) Turn the Worm Gear again to eject the cassette.

2. BATTERY OPERATION

1) Take out the mechanism from Main C.B.A.
2) Connect the Battery (Manganes-Type R6 (AA) 3pcs./ +4.5V) to the Loading Motor terminals as shown below.
3) After moving the Loading Post to the unloaded position, disconnect the battery to stop the motor.
4) Turn the Capstan Rotor Unit to clockwise to take up the tape.
5) Reconnect the battery to eject the cassette.

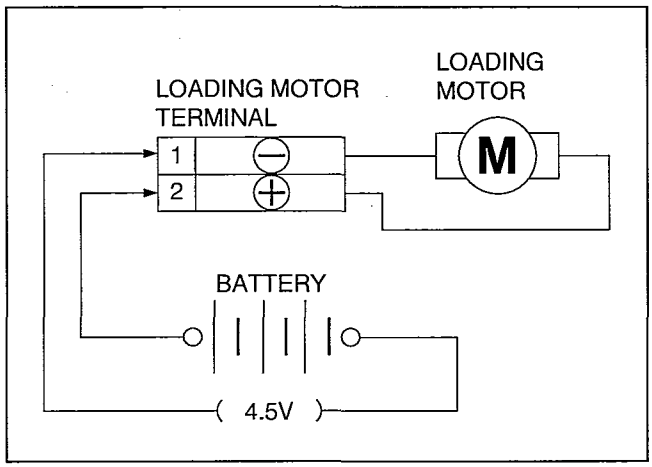

Fig. S13

If the cassette tape can not be removed by the above 2 methods, remove it by the following method.

1) Remove the Top Panel.
2) Remove the Front Panel Unit.
3) Lift up the Pinch Arm after removing spring.
4) Push the P5 Arm and remove the cassette tape from tape transportation (P1, P2, P3 and P5 Posts).
5) Turn the Capstan Rotor Unit to take up the tape.
6) Remove 1 screw from the Side Plate (R) Unit to disconnect the Rack Gear from the Carriage Connection Gear.
7) Take out the cassette tape from the Cassette Compartment.

1-2. SELF-TEST INDICATION DISPLAY

This VTR has a self-diagnosis and display function. If the VTR detects trouble during installation or during use, one of the following Fault Indication Codes will automatically appear in the VTR display. Fault Indication codes are displayed in the form of a single English letter followed by two numbers, as for example "H01".

Note:1. The indication "U" is displayed on the FIP while power remains on.

2. Otherwise, the indication "H" or "F" is displayed on the FIP, and the power is automatically turned off. When the power is turned on again, the Fault Indication Code will disappear and the unit will return to normal display mode (either clock or counter).

3. This Fault Indication Code will be stored in the Timer microprocessor even with the AC plug disconnected. The two-digit number portion of the stored Fault Indication Code can be redisplayed in the FIP's "second" display position (the last 2 digits on the light) by placing the unit is Service Mode Number 2 when turning on Service Information Display as for example "01" or "02" etc. If a second error occurs, only the most recent error will be displayed and stored.

4. To erase the stored Fault Indication Code data, Press the FF and EJECT buttons for 5 seconds.

<FIP>

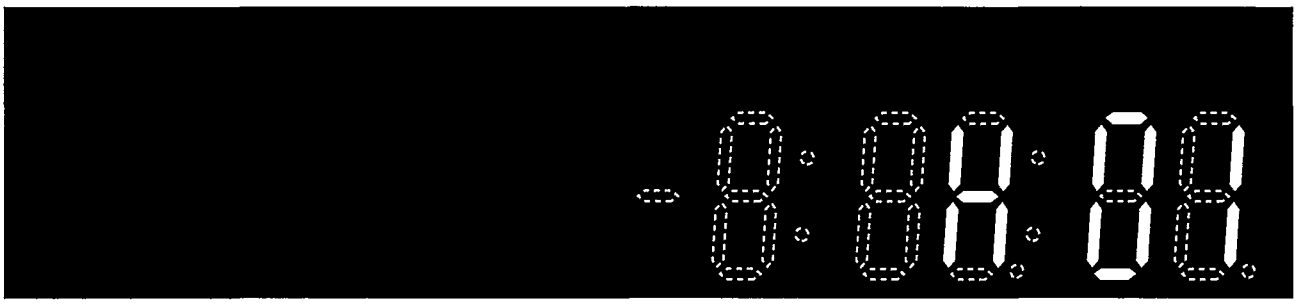

INDICATION	CAUSE	REMEDY/CHECK
U 10	Dew formation.	Wait until the indication disappears.
H 01	After cylinder lock is detected, the cylinder does not start rotating again even after tape unloading.	Check the cylinder-motor drive circuit.
H 02	Cassette tape is not wound up during tape unloading except Eject mode.	Check the capstan-motor drive circuit.
F 03	Mechanism locks during mode transition except Eject mode.	1. Check the loading-motor drive circuit. 2. Check the mechanism phase alignment. 3. Check the Mode Switch.
F 04	Mechanism locks during tape unloading.	1. Check the loading-motor drive circuit. 2. Check the mechanism phase alignment.
F 05	Cassette tape is not wound up during tape unloading in Eject mode.	1. Check the capstan-motor drive circuit. 2. Check the Supply/Take-up reel pulse.
F 06	Mechanism locks after tape unloading in Eject mode.	1. Check the loading-motor drive circuit. 2. Check the mechanism phase alignment for Cassette Holder Unit.
F 07	Rec power voltage does not appear in Rec mode.	Check the Rec power supply circuit.
F 08	Rec power voltage appears except Rec mode.	Check the Rec power supply circuit.
F 09	No serial clock transmission between IC6001 and IC7501.	Check the serial clock circuit.

Fig. T1 Self-Test Indication Display

1-3. SERVICE INFORMATION DISPLAY

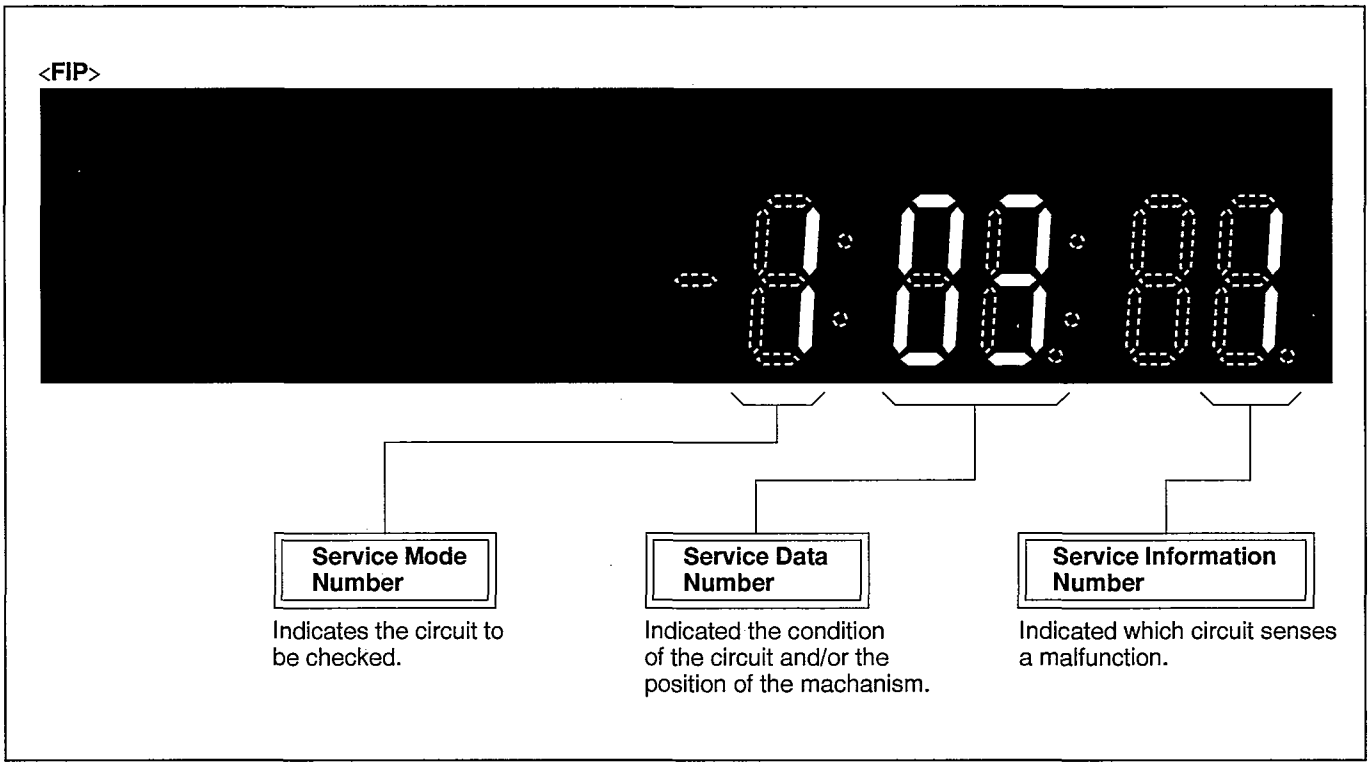

Fig. D1 Service Information Display

1-3-1. Purpose of Service Information Display

This information aids trouble shooting by indicating the source of the malfunction. The service mode number & service data number are used by the technician during repair while the service information can be used by the consumer to diagnose malfunctions allowing the technician to provide a more accurate repair cost estimate and reduce repair time.

1-3-2. Turning on Service Information Display

(1) Press the FF and EJECT buttons.

In the Service Information Display, there are four digits divided into 3 functions.
The first digit indicates which of the 7 service modes that the unit is currently in.

MODE 1 : Checks tape protection circuit
MODE 2 : Checks tape transport mechanism
MODE 3 : Checks mode switching operation
MODE 4 : Checks control buttons
MODE 5 : Checks capstan motor
MODE 6 : Checks cylinder motor
MODE 7 : Checks loading/unloading operation

The second and third digits are service data which indicate the condition of the circuit or mechanism being checked.

The forth digit is the service Information display. It is to be used by the consumer to help determine the source of a malfunction. The service information display operates independently of the service modes and stores the fault indication in memory for as long as AC power is not supplied.

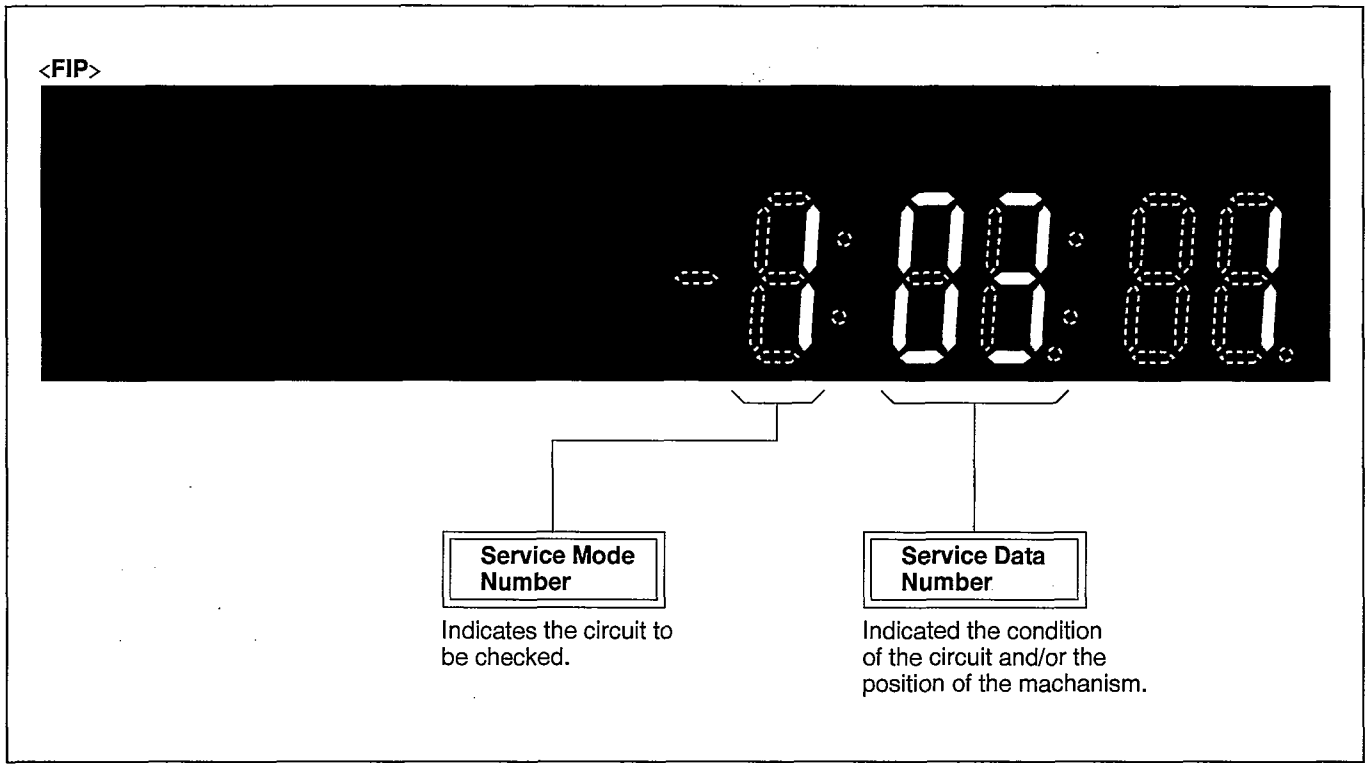

Fig. D2 Service Mode Number and Service Data Number on S.I.D.

(1) Turn on Service Information Display.
(2) To change Service Modes press the FF and EJECT buttons simultaneously.
(3) Mode 1 : Checks that the Sensor LED, Supply & Take-up Sensor circuits check the circuits by blocking the light from the Sensor LED to either or both Supply & Take-up Sensors.
When the light is blocked to both sensors, "00" should be indicated on the service data number.
When the light is blocked to the supply sensor, "01" should be indicated.
(4) Mode 2 : Checks the mode switch circuit while indicating mechanism position.
Service Data Numbers indicate the position of the mode switch and there by the mechanism position.
(5) Mode 3 : Checks that mode switch circuit operations have been completed.
Service Data Number should indicate "00" after each mechanism operation is completed.
(6) Mode 4 : Checks the operation circuit.
Indicates if IC6001 receives the operating commands from the mode buttons and/or remote controller.
(7) Mode 5 : Checks the capstan motor circuit.
Indicates if the IC6001 has received the command to rotate the capstan motor.
(8) Mode 6 : Checks the cylinder motor circuit.
IC6001 has received the command to rotate the cylinder motor.
(9) Mode 7 : Checks the Loading/Unloading Operation.
The Loading Motor rotates for loading operation when the "PLAY" button is pressed.
The Loading Motor rotates for unloading operation when the "STOP" button is pressed. This mode can be displayed indefinitely until the OPERATE button is pressed.

<NOTE>
Refer to Fig. D5 for details of Service Data Numbers.

1-3-4. Service Information Number

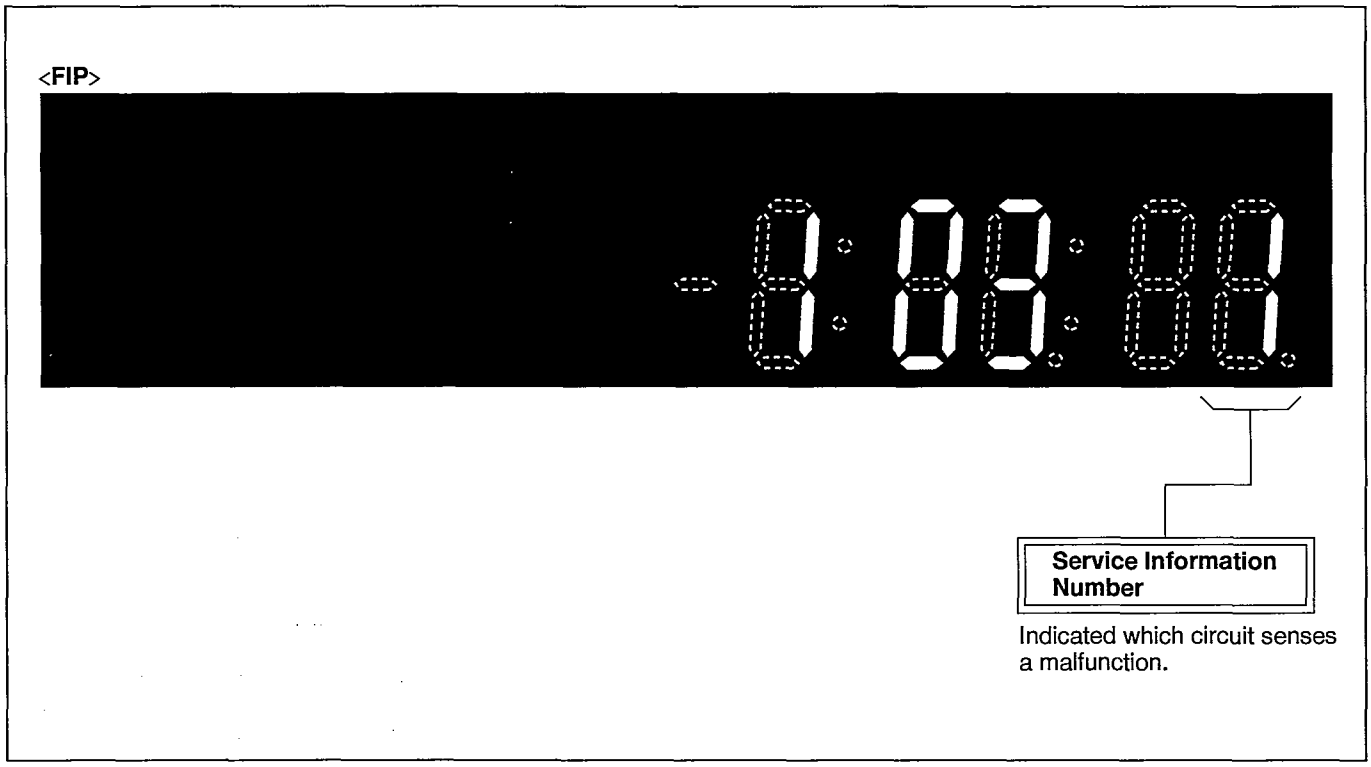

Fig. D3 Service Information Number on S.I.D.

Refer to Fig. D4 for details of Service Information Number.

Note:
The Service Information Number display is independent of the service mode display.
The Service Information Number will be stored as long as AC power is not supplied. (It can be displayed in the Service Mode 2.)
If a second error occurs, only the most recent error will be displayed.

Service Information Number	Malfunction
0	Normal (No problem)
1	Cylinder stop
2	Tape reel stop
3	Stop at position other than 4 or 6
4	Stop during unloading
5	Faulty capstan rotation
6	Stop during Cassette-In/Eject operation

Fig. D4 Detail Service Information Numbers

Service mode Number	Note for checking Service Data Numbers	Service Data Numbers	Indication	Remarks
1	———	00	No light detected at either sensor.	Tape not required.
		01	Tape Beginning. Light to Supply Photo Sensor is blocked.	
		02	Tape End. Light to Take-up Photo Sensor is blocked.	
		03	Light detected at both sensors.	
2	———	00	EJECT	Tape Required. *1: STOP3; The Pinch Roller is on the capstan motor shaft. *2: STOP; The Pinch Roller is off the capstan motor shaft. Refer to Fig. D7 to Check mechanism Position and timing.
		01	Cassette-down	
		02	REV, REV SLOW	
		03	Loading/Unloading	
		04	PLAY/REC, STILL/PAUSE, CUE, FWD SLOW, STOP3 *1	
		05	STOP *2	
		06	FF/REW	
		07	Intermediate position	
3	Disregard service data displayed until mechanism operation is completed. Then the display should indicate "00".	00	Any display other than "00" indicates a fault in the mode switch circuit or system.	Tape Required.
4	Display only when the operating button is pressed.	Refer to Fig. D6		Tape not required.
5	Left digit only, disregard Right digit display.	8 1 Left Digit Right Digit	8, 9, u, A, –, n, L, and no display indicate that the Capstan motor "PLAY" command received by IC6001.	Tape required. If a symbol other than those listed is displayed, a malfunction in that circuit is indicated.
	Right digit only, disregard left digit display.	8 7 Left Digit Right Digit	1, 2, 3, 4, 5, 6, 7, indicate that the Capstan motor "CUE, FF, Forward Slow" commands received by IC6001.	
	Right digit only, disregard left digit display.	8 Left Digit Right Digit	8, 9, u, A, –, n, L, and no display indicate that the Capstan motor "Reverse, Rew, Reverse Slow" commands received by IC6001.	
6	Left digit only, disregard Right digit display.	1 0 Left Digit Right Digit	1, 3, 5, 7, 9, A, n and no display indicate that the cylinder motor "ON" command received by IC6001.	Tape required. If a symbol other than those listed is displayed, a malfunction in that circuit is indicated.

Fig. D5 Service Data Display and Indication

1-3-5. Timing Chart from Mode SW to System control IC6001

System control IC6001 senses the mechanism position through the Mode SW.
Fig. D6 shows the timing for Service Mode Number 2.

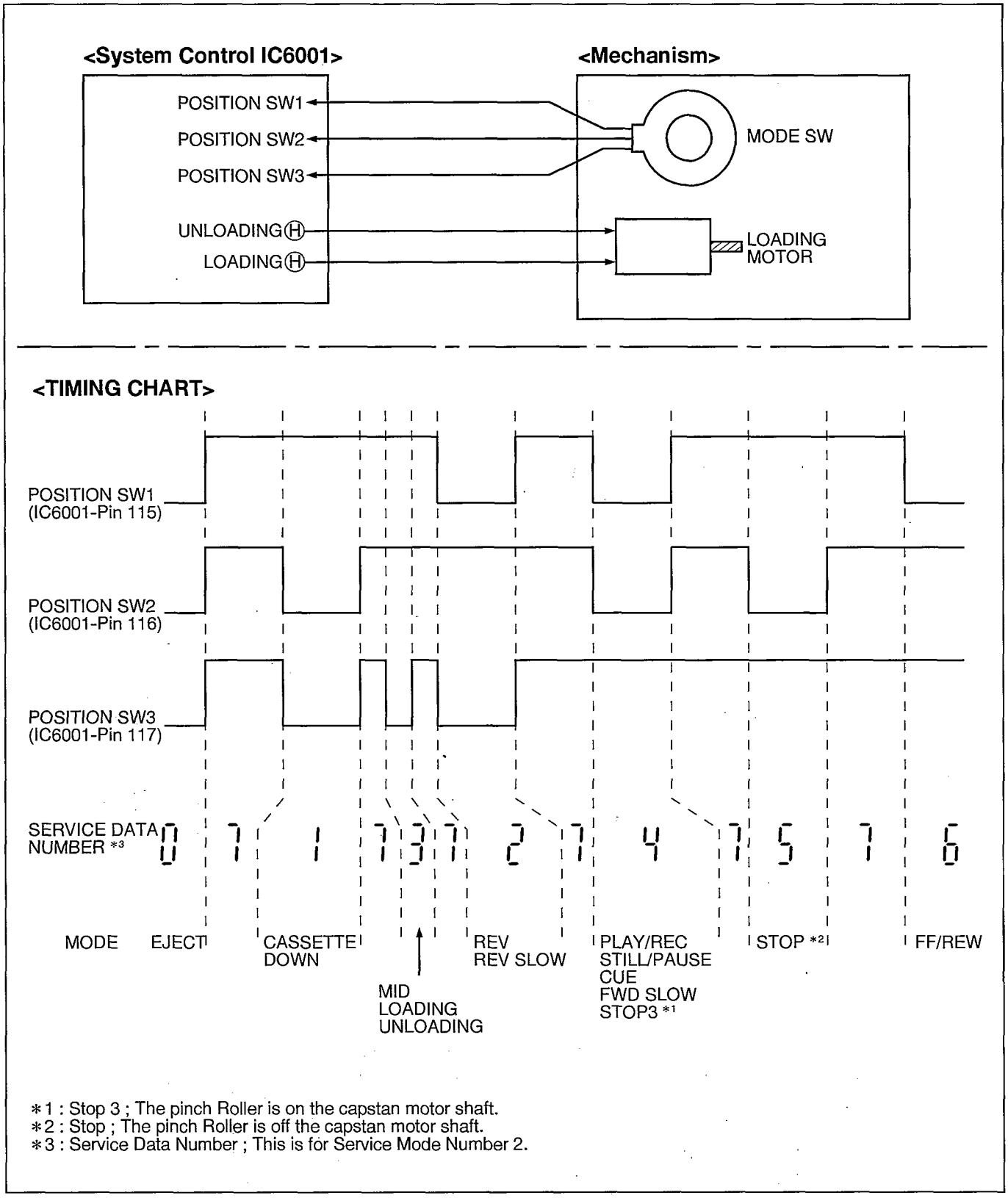

Fig. D6 Timing Chart of Mode SW

Controls and Connection Sockets

This gives a detailed explanation of the function of each button, switch and connection socket.

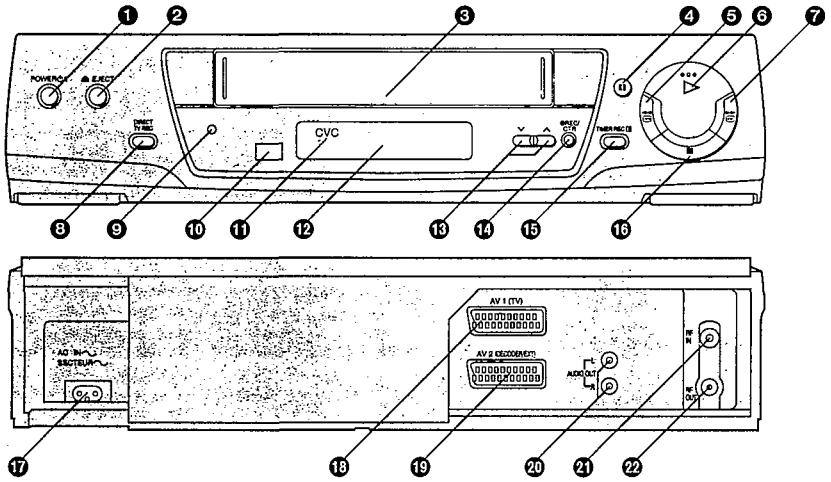

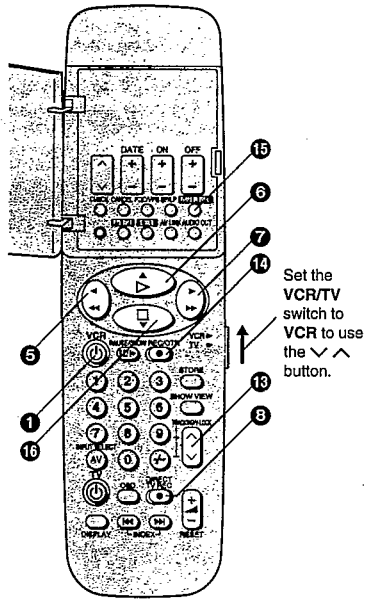

Set the **VCR/TV** switch to **VCR** to use the ∨ ∧ button.

FRONT

❶ **POWER ⏻/I (VCR ⏻)**
Press to switch the VCR from on to standby mode or vice versa. In standby mode, the VCR is still connected to the mains.

❷ **EJECT**
To eject a video cassette.

❸ **Cassette Compartment**
Insert a video cassette here.

❹ **❚❚ (PAUSE/STILL)**
During playback: Still picture.
During recording: To interrupt recording.

❺ **◀◀ (REWIND)**
In the stop mode: To rewind the tape.
In the playback mode: To search backward.
In the rewind mode: To obtain high speed picture.
"◁◁" is lit.

❻ **▷ (PLAY)**
To start playback. "▷" is lit.
For the repeat playback function.

❼ **▶▶ (FAST FORWARD)**
In the stop mode: To fast forward the tape.
In the playback mode: To search forward.
In the fast forward mode: To obtain high speed picture.
"▷▷" is lit.

❽ **DIRECT TV REC**
For the Direct TV REC function.

❾ **Standby Indicator**
This indicator is lit when the VCR is turned off or the VCR is timer recording standby mode.

❿ **Infra-red Remote Control Receiver Window**

⓫ **CVC (Crystal View Control) Indicator**
This indicator is normally lit when the VCR is on.

⓬ **Display**

⓭ **∨ ∧**
To select the required programme position (TV station).

These buttons can also be used for tracking adjustment and vertical locking adjustment.
See page 6.

Set the **VCR/TV** switch to **VCR** to use the ∨ ∧ button of remote controller.

⓮ **REC/OTR**
To start a recording.
For One-Touch Recording (OTR).

⓯ **TIMER REC**
To turn the timer recording function on and off.
⏲ is lit or not lit.
Once operating timer recording function, the normal VCR operation is not possible unless this button is set to off.

⓰ **■, □ (STOP)**
To stop any playback or recording.

REAR

⓱ **AC IN~**
To connect to the main power supply.

⓲ **AV1 (TV)**
This 21-pin scart terminal carries input and output signals for both picture and sound. TV sets equipped with a similar socket can be connected here.
This is also called Scart
Peritel
Euro Connector
Euro AV

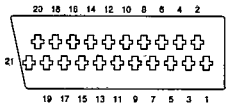

1	AUDIO OUTPUT CH2 (R)	13	RED GROUND
2	AUDIO INPUT CH2 (R)	14	BLANKING GROUND
3	AUDIO OUTPUT CH1 (L)	15	RED
4	AUDIO GROUND	16	BLANKING
5	BLUE GROUND	17	VIDEO OUTPUT GROUND
6	AUDIO INPUT CH1 (L)	18	VIDEO INPUT GROUND
7	BLUE	19	VIDEO OUTPUT
8	SWITCHING VOLTAGE	20	VIDEO INPUT
9	GREEN GROUND	21	GROUND
10	CONTROL SIGNAL		
11	GREEN		
12	No connection		

Caution: RGB reservation for only E/E operation when connecting the Pay TV decoder

⓳ **AV2 (DECODER/EXT)**
To connect to a decoder or another VCR.

⓴ **AUDIO OUT**
To connect the audio cable to a stereo audio system.

㉑ **RF IN**
To connect to the external aerial.

㉒ **RF OUT**
To connect to the aerial terminal on a TV set.

Infra-red Remote Controller

VCR OPERATION

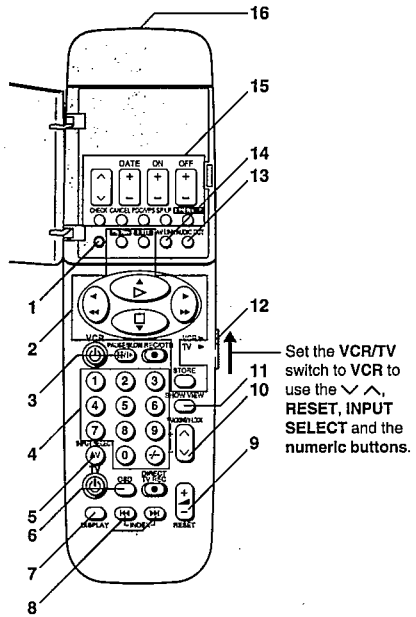

1 This button is not used to operate this VCR.

2 On Screen Display Menu Operation Buttons
The buttons written by green characters are used for the on screen display menu operation.

MENU: To make On Screen Display **Main Menu** appear on the TV screen.
EXIT: To exit the menu.
STORE: To confirm the selection, or to store.
▲ ▼ ◀ ▶:
To make selections from On Screen Display.
- These buttons can also be used for the playback, stop, rewind and fast forward mode.

3 PAUSE/SLOW
During playback:
- By pressing: Still picture. "▯▯" is lit.
- By pressing for 2 seconds or more: Slow playback. "▯▷" is lit.

During recording: Interrupts recording.

4 Numeric Buttons
Ensure that the **VCR/TV** switch is set to **VCR**.
- To select the programme positions (1–99) of the VCR.

9: (9)

19: (-/--) → (1) → (9)

- To programme a ShowView number.

5 INPUT SELECT
To select the A1 or A2 external recording source.
- Ensure that the **VCR/TV** switch is set to **VCR**.

6 OSD
For the On Screen Display Function.

7 DISPLAY
To change the indication on the VCR Display or On Screen Display.
→Clock→Counter→Remaining Tape Time→

8 INDEX
For the index search function.

9 RESET
To reset the tape counter (elapsed time) to "0:00.00".
- The tape counter is automatically reset to "0:00.00" when a video cassette is inserted.
- Ensure that the **VCR/TV** switch is set to **VCR**.

10 ∨ ∧, TRACKING/V-LOCK
Ensure that the **VCR/TV** switch is set to **VCR**.

To select the required programme position (TV station) of the VCR.

For the tracking adjustment and vertical locking adjustment
- For manual tracking adjustment
  The ∨ (−) and ∧ (+) buttons are used to adjust the tracking when, for example, noise bars on the picture during normal playback are better removed manually than by automatic digital tracking control. Press both buttons down at the same time to return to automatic digital tracking control.
- For slow tracking adjustment
  When noise bars appear during still or slow playback, switch over to slow playback and adjust with the ∨ (−) or ∧ (+) button to reduce the noise bars.
- For vertical locking adjustment
  Use the ∨ (−) and ∧ (+) buttons to minimize any vertical jitter during still picture playback.

11 SHOW VIEW
For the ShowView programming.

12 VCR/TV switch
VCR: To select the VCR operation mode.
TV: To select the TV operation mode.

13 AUDIO OUT
To select the desired sound mode.
At the every push of this button, the audio output mode changes as follows.
→Stereo→Left→Right→Normal audio track

The Left (L) and Right (R) Indicators shown which sound mode is selected in the following way.
Stereo: Both the L and R Indicators appear.
Left: The L Indicator appears.
Right: The R indicator appears.
Normal: Both the L and R Indicators don't appear.

14 AV LINK
To select the VCR mode or TV mode for AV LINK.

15 Timer Recording Operation Buttons

∨ ∧, DATE, ON, OFF:
To programme a timer recording.

CHECK:
To check timer programmes.

CANCEL:
To cancel timer programmes.

PDC/VPS:
To set the PDC/VPS recording option or cancel the option.

SP/LP:
To select the tape speed desired for recording.
SP gives the best picture quality.
LP gives the longest recording time.

TIMER REC:
To turn the timer recording function on and off.
◷ is lit or not lit.
Once operating timer recording function, the normal VCR operation is not possible unless this button is set to off.

16 Infra-red Transmitter

TV OPERATION

Setting the Remote Controller for Operation of your TV
Panasonic television only can be operated with provided remote controller.

1. First, confirm that the TV can be operated correctly with the remote controller.
2. If the TV does not operate correctly, press the **TV** ⏻ button while pressing the **VCR** ⏻ button on the remote controller. Then confirm that the TV can be operated correctly with the remote controller.
3. If the TV does not operate correctly still, press the **AV** button while pressing the **VCR** ⏻ button on the remote controller. Then confirm that the TV can be operated correctly with the remote controller.

- Some TV models cannot be operated using this remote controller.

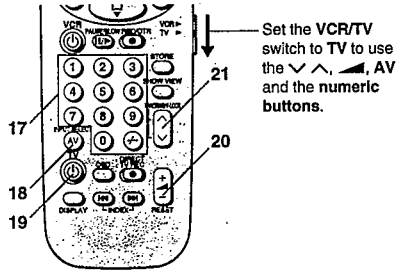

17 Numeric Buttons
To select programme positions (1–99) of the TV.
- Ensure that the **VCR/TV** switch is set to **TV**.

18 AV
To select TV input.
- Ensure that the **VCR/TV** switch is set to **TV**.

19 TV ⏻
Press to switch the TV from on to standby mode or vice versa. In standby mode, the TV is still connected to the mains.
- With some TV models, it may only be possible to switch the TV to the standby mode using this button. In this case, use **AV**, ∨ ∧ or **numeric buttons** to switch the TV on.

20 ◢
To adjust the volume of the TV.
- Ensure that the **VCR/TV** switch is set to **TV**.

21 ∨ ∧
To select the required programme position (TV station) of the TV.
- Ensure that the **VCR/TV** switch is set to **TV**.

Power Source for the Remote Controller

The remote controller is powered by 2 "AA", "UM3" or "R6" size batteries. The life of the batteries is about one year, although this depends on the frequency of use.

Precautions for Battery Replacement

- Load the new batteries with their polarity (⊕ and ⊖) aligned correctly.
- Do not apply heat to the batteries, or an internal short-circuit may occur.
- If you do not intend to use the remote controller for a long period of time, remove the batteries and store them in a cool and dry place.
- Remove spent batteries immediately and dispose of them.
- Do not use an old and a new battery together, and never use an alkaline battery with a manganese battery.

Installing the Batteries

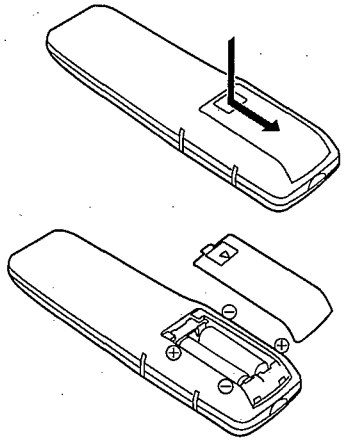

Connections

This tells you how to connect with an aerial, TV, etc.

Basic Connections

The following connections are required to record and play back the VCR through TV set:

- After making this connection, refer to page 11.

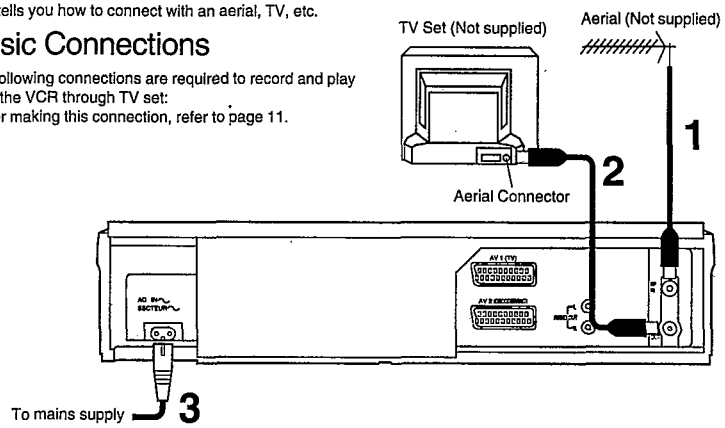

Connection to a TV Set with 21-Pin Scart Terminal

- After making this connection, refer to page 12.
- Use the fully-wired 21-pin scart cable in step 3 when connecting this VCR to **the TV with the "NEXTVIEWLINK", "Easy Link" or "Megalogic"-logo**, otherwise it is not possible to operate **"Preset Download"** or **"Direct TV REC"** functions.

Note:
Set the RF output channel of the VCR to "--" (RF OFF) when the VCR is connected to the TV via the 21-pin scart cable. See the bottom section on page 11.

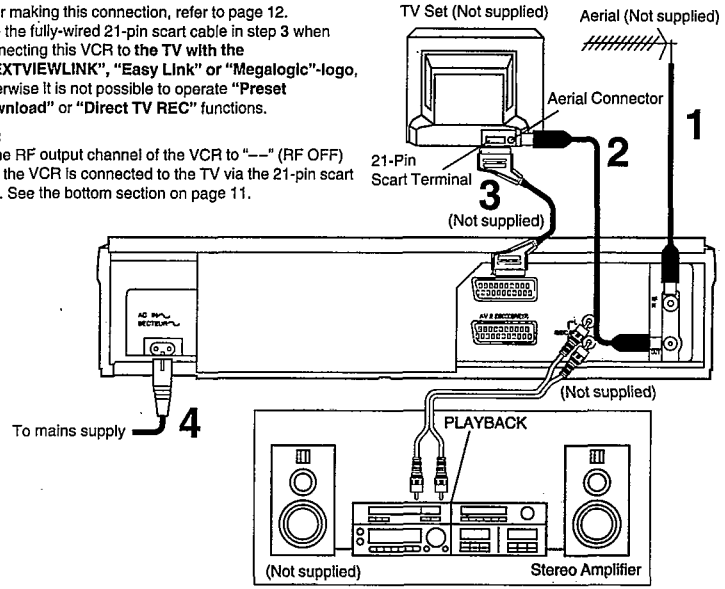

- **Connection to a Stereo Amplifier**

Connection to a Decoder

●After making this connection, refer to page 12.

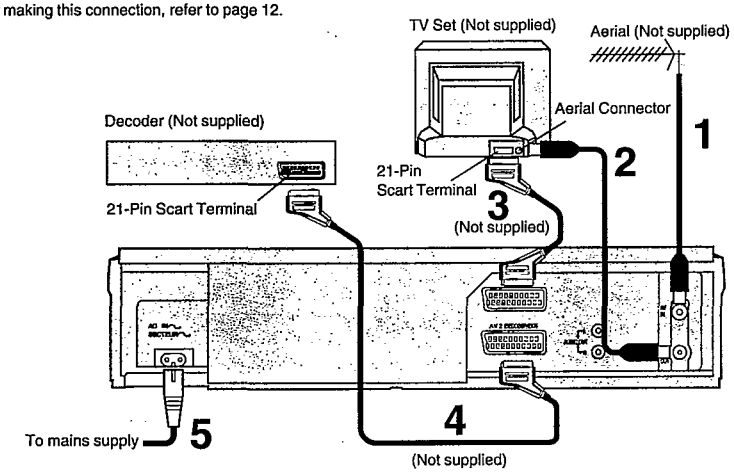

Notes:
- If the TV set is provided with an RGB-compatible connector, connect the 21-pin AV cable from the VCR to this connector. Use the fully-wired 21-pin scart cable for connecting the TV set and VCR and for connecting the VCR and decoder.
- Set the RF output channel of the VCR to "--" (RF OFF) when the VCR is connected to the TV via the 21-pin scart cable. See the bottom section on page 11.
- When the decoder is connected to the AV2 socket, **AV2 Connection** must first be set to **DECODER.** (See page 33.)

AV LINK

With this button the connected colour TV set can be switched from TV mode to VCR mode (vice versa) when it is connected by means of 21-pin scart cable.

This makes a variety of functions possible such as simultaneous recording and viewing when a Pay TV decoder or a satellite receiver has been connected.

VCR mode (VCR indicator lights):
To enjoy sound and pictures from the VCR.
- When **MENU** is pressed and the OSD (On Screen Display) screen is displayed, the unit also automatically switches to VCR mode.
  However, if the unit is originally in TV mode, the VCR indicator is not displayed.
- The unit also automatically switched to VCR mode when playback is started. However, the unit cannot be returned to TV mode during playback.

TV mode (VCR indicator goes off):
To watch another programme on the TV while recording on the VCR.
- Select the programme to be watched using the TV set's tuner.
- The sound and pictures of a different channel are received by the VCR.

VCR		TV set
Power On	VCR mode	AV input selected
	TV mode	Input from TV set's tuner*
Power Off	—	Input from TV set's tuner

*When the VCR is set to the TV mode and the Pay TV channel is selected, the signals will still be scrambled even when Pay TV is selected by the TV set's tuner. At a time like this, either set the VCR to the VCR mode or switch the TV set's input signals to AV input.

Tuning the TV to your VCR

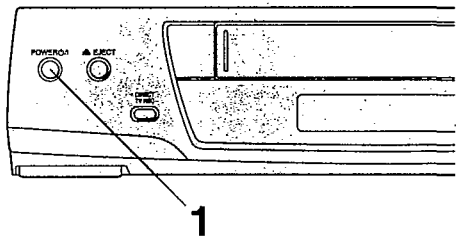

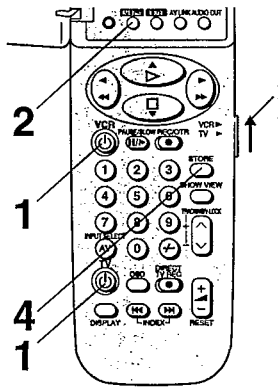

Set the **VCR/TV** switch to **VCR** to use the ∨ ∧ and the **numeric buttons.**

The VCR supplies a signal to the TV set via the RF coaxial cable on channel 36.
It is possible to view the video picture on your TV in the same way that you watch TV broadcasts.
If you have connected the VCR to the TV through the *21-pin scart terminal, then you do not need to follow the* procedure mentioned below.

Operations

1

Turn on the TV and VCR.

2

Keep **MENU** pressed for 5 seconds or more.
- Press the button until "Ch" appears in the VCR display.

3 On Screen Display

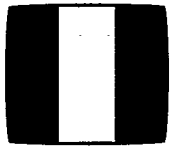

(Test Pattern)

Set the TV to an unused position which you wish to use for your video playback.
- Tune the TV until the test pattern appears on the screen.

4

(Country-Selection)

Press **STORE** to exit Test Pattern screen, and then **Country-Selection** screen appears.
Now refer to the page 13.

Use the remote controller for changing the RF output channel setting:
Follow the steps **1** and **2** above.

3 Enter the desired channel number (21–69) by using the **numeric buttons** or the ∨ ∧ of the remote controller.
- Set the RF output channel of the VCR to "--" (RF OFF) when the VCR is connected to the TV via the 21-pin scart cable.

Press the ∨ ∧ buttons or the **"0" numeric button** to display "--".

→21←.....→69←
→--←
(RF OFF)

4 Press **STORE** to finish the setting mode.
- Retune your TV to the new channel for the VCR.
- After the **Country-Selection** is set, the **Country-Selection** screen will not be displayed even if the RF output channel is changed and the **STORE** button is pressed.

Preset Download

When the VCR is connected to a **TV with the "NEXTVIEWLINK", "Easy Link" or "Megalogic"-logo using the fully-wired 21-pin scart cable**, the station list data will be copied from the TV to the VCR and the TV channel will be preset on the VCR.
This function is known as **"Preset Download (Download from TV)"**.

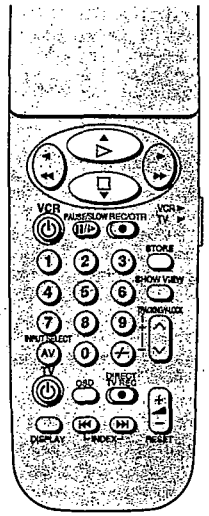

When the VCR is turned on after being connected to a **TV with the "NEXTVIEWLINK", "Easy Link" or "Megalogic"-logo using the fully-wired 21-pin scart cable**, follow the procedure below.

On Screen Display

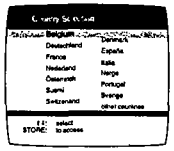

1 Select the desired country.

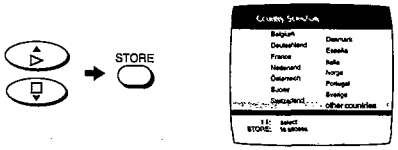

- When Switzerland or Belgium has been selected, operation moves to the screen which follows. Select the item in accordance with the language required.

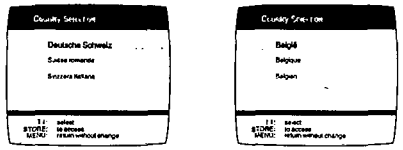

2 Select **Download from TV**.
- When performing Manual Tuning described hereafter on page 28, be sure to select **Start auto setup**. This is because when the tuning contents for the TV are changed, this information is downloaded to the VCR again, possibly erasing the independent contents input by Manual Tuning.

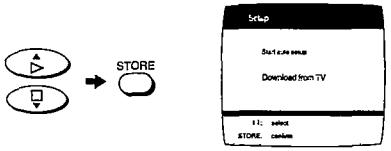

- Downloading is started automatically.

- After Download is finished, Short ATP (Auto Tuner Preset) will be start automatically.

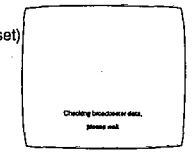

- When Short ATP is finished, the lowest channel position at which a broadcast can be tuned in is received.

Note:
Download will not work when the VCR is connected to a TV with the "NEXTVIEWLINK", "Easy Link" or "Megalogic"-logo **but without a fully-wired 21-pin scart cable.**
In this case, perform **Auto Setup** on the next page.

Auto Setup

Auto Setup

When the VCR is turned on after connecting to a TV other than *a TV with the "NEXTVIEWLINK", "Easy Link" or "Megalogic"-logo using the fully-wired 21-pin scart cable*, follow the procedure below.

On Screen Display

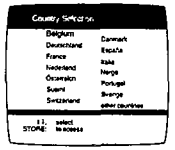

Select the desired country.

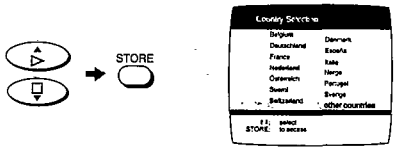

- When Switzerland or Belgium has been selected, operation moves to the screen which follows. Select the item in accordance with the language required.

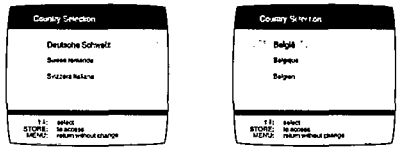

Auto Setup (Auto tuning and Auto clock setting) starts automatically.

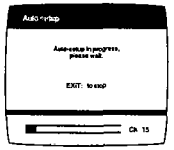

- The Auto setup is searching for TV station from VHF minimum to UHF maximum and memorizing the data for every programme position. The other programme positions are skipped.
- The Auto setup takes five or more minutes to complete the search for TV station and the clock setting.

Notes:
- If VCR is not correctly set by Auto setup, see **Various settings** on pages 28–31.
- Auto clock setting will not work correctly if teletext information is not available. If the clock setting screen appears after auto tuning has been completed, set clock manually. See page 31.
- Clock information is subject to teletext information. If year information is not in teletext or time information in teletext is incorrect, set clock manually. See page 31.

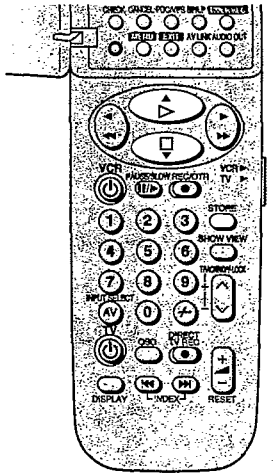

Viewing the TV station list

1 Press **MENU**.

2 Select **Station list**.

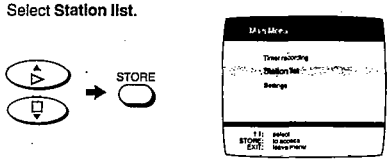

3 Select the desired TV station, if you want to view the broadcast.

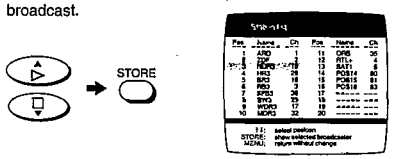

Auto Set Up Feature Important Information (Only after performing Auto Setup)

The Auto Set Up feature will tune in your channels automatically.
However, under certain circumstances in some transmission areas certain channels may not be assigned a channel name or their normal channel position. If this is the case they will need to be tuned manually. If Auto Set up is not successful, please follow the steps below.

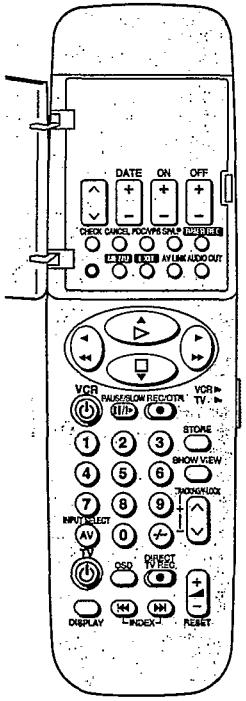

Operations

1 Press **MENU**, and select **Settings**.

On Screen Display

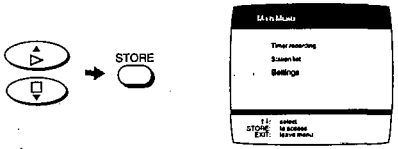

2 Select **Tuning**.

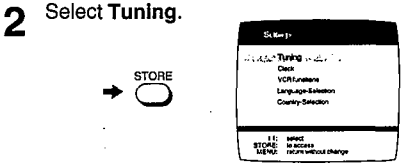

3 Select **Manual**.

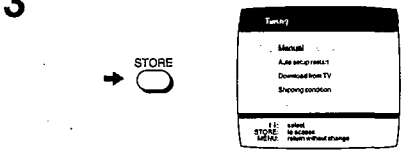

4 The STATION LIST is now displayed. (Channel information will vary.)

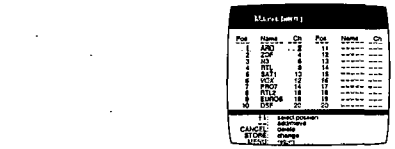

If all station names are displayed, no manual tuning adjustment is needed.
However, follow the steps on the next page when there is a ∗ mark at the beginning of the station name display, even if the station name is displayed.

If manual tuning adjustment is required, follow the steps indicated below.

When changing or installing station name;

(It is also possible to changing the programme position here.)

Operations

Follow steps **1** to **3** on the previous page.

4 Select the station(s) named ∗□□□□.
Establish which channel you are viewing, by checking your TV Guide/ Newspaper.

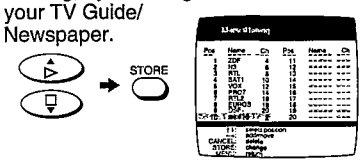

- "□" indicates the position number or station name. This is the same as steps **6** and **7**.

5 Next, highlight the TV station name.

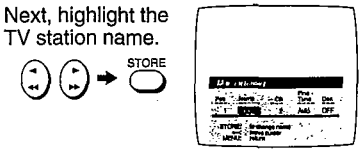

6 Enter characters into **all** five ∗□□□□ positions, from the table using the arrows and press **STORE** after each character. Use blank space if required, to enter a blank select the area between **Z** and ∗.

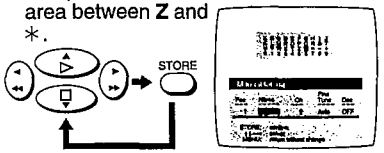

7 Press **MENU** once.

If any other TV station names are marked ∗□□□□, repeat steps **4→7**.

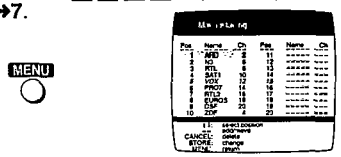

Note:
See page 29 for changing the programme position.

Playback

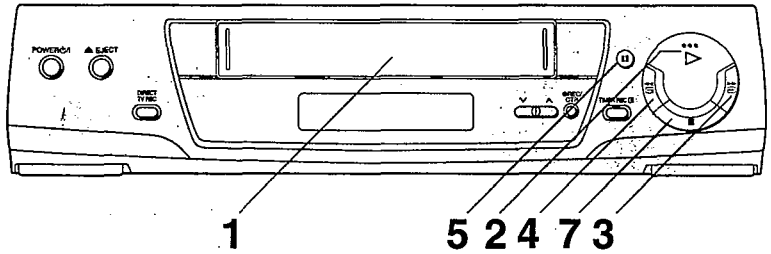

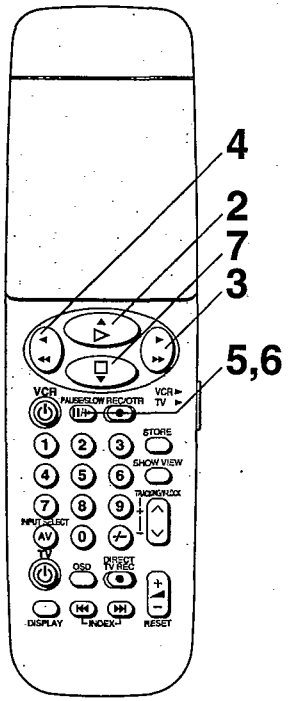

	Operations	Display Symbols	
1			Insert a recorded cassette tape.
2			Start viewing the picture.
3			Search forward by tapping ▶▶ **(FAST FORWARD).** •To change back to normal playback, press ▷ **(PLAY).**
4			Search backward by tapping ◀◀ **(REWIND).** •To change back to normal playback, press ▷ **(PLAY).**
5	PAUSE/SLOW		View a still picture. •Press **PAUSE/SLOW** or ❚❚ **(PAUSE/STILL).** •To continue the normal playback, press ▷ **(PLAY), PAUSE/SLOW** or ❚❚ **(PAUSE/STILL).**
6	PAUSE/SLOW		View the slow motion picture. •Keep **PAUSE/SLOW** pressed for 2 seconds or more. •To continue the normal playback, press ▷ **(PLAY).**
7			Stop viewing the picture.

Note:
If you keep ▶▶ **(FAST FORWARD)** or ◀◀ **(REWIND)** pressed in step **3** or **4**, search playback is activated while the button is pressed, and operation returns to normal playback when the button is released.

Other Playback Functions

To obtain High Speed Picture during Fast Forward or Rewind

Keep ▶▶ **(FAST FORWARD)** pressed during fast forward.
Keep ◀◀ **(REWIND)** pressed during rewind.

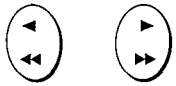

To playback the Recorded Part Repeatedly

Keep ▷ **(PLAY)** pressed for 5 seconds or more.
"R" appears on the On Screen Display.

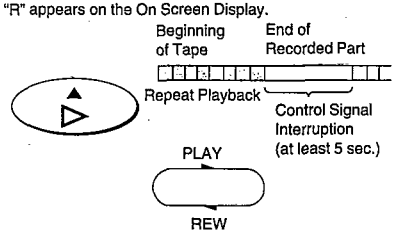

•Press □ **(STOP)** to release from Repeat Playback mode.

Notes:
•Audio reproduction of linear (conventionally recorded) tapes will be monaural when played back on the FM Hi-Fi video recorders.
•Cue, review or slow playback will be automatically released after 10 minutes, and still playback after 5 minutes.
•In LP mode only:
1. During any playback mode other than normal playback, the picture may have some noise bars, the colour may be unstable, or a black and white picture may appear.
2. When playing back a tape which was recorded on another VCR, it may be necessary to adjust the Tracking Control. In some cases the picture quality may still be inferior. This is due to limitation of format.

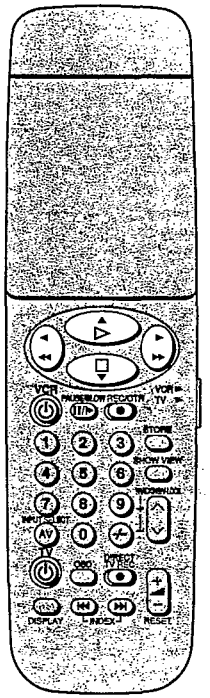

Manual Recording

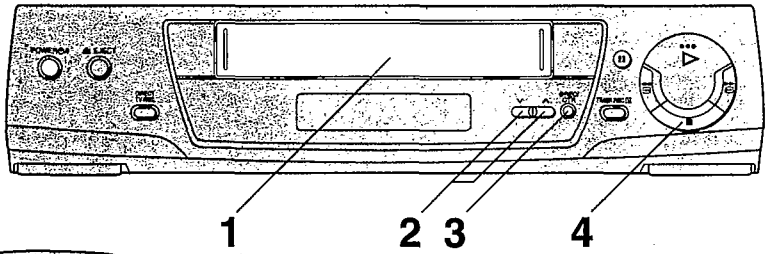

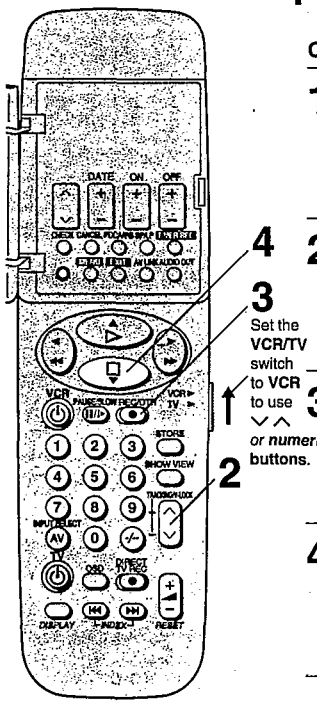

Operations	Display Symbols	
1		Insert a cassette tape with an intact erasure prevention tab. •If it has already been inserted, press **POWER ⏻/I (VCR ⏻)** to turn the VCR on.
2		Select TV station. •It is also possible to select by pressing **numeric button**. •Ensure that the **VCR/TV** switch is set to **VCR**.
3	REC/OTR	Start recording.
4		Stop recording.

To select the Desired Tape Speed

Press **SP/LP** before recording.

SP/LP

To Interrupt Recording

Press **PAUSE/SLOW** or **II (PAUSE/STILL)** during recording.
Press again to continue recording.

PAUSE/SLOW

To record One TV Programme while Viewing Another Programme

1 Refer to the manual recording operations steps **1** to **3**.

2 Select the TV programme on your TV set you wish to view at the present time.

To display the Approximate Remaining Tape Time

1 Select **Tape Length** from On Screen Display and select the corresponding cassette tape length. See page 33.

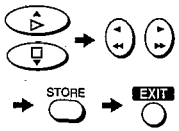

On Screen Display

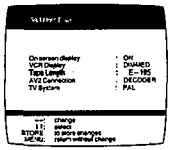

◀ E-180: For E30, -60, -90, -120 and -180 tapes.
E-195: For E195 tape.
E-240: For E240 tape.
E-260 ▶: For E260 and -300 tapes.

2 Press **DISPLAY**.

DISPLAY

→Clock→Counter→**Remaining Tape Time**

•The remaining tape time may not be displayed correctly depending on the tape used.

Recording of Stereo and Bilingual Programmes

1 Recording is automatically made in the stereo or bilingual mode. This prevents errors in the selection of the dubbed or the original language.

2 During playback press **AUDIO OUT** to select the desired sound mode. See page 7.

AUDIO OUT

Notes:
•When a video cassette with a broken off tab is inserted, the "OO" indication will flash to indicate that recording is not possible.
•The recording pause mode will be automatically released after 5 minutes, and be back to the stop mode.

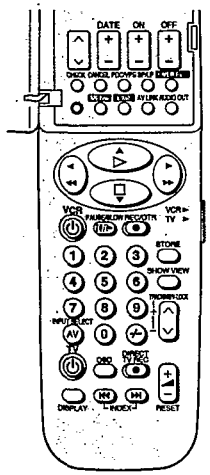

The NICAM Broadcast System (NV-HD620EC only)

NV-HD620EC is equipped with the NICAM sound system also.
NICAM is a 2 Channel sound broadcast system to provide either a high quality stereo sound track or 2 independent MONO sound tracks, M1 and M2.
NICAM programmes are always accompanied by standard sound broadcasts and you can select the desired sound with **AUDIO OUT** during playback.
•The NICAM digital stereo sound can only be recorded on the Hi-Fi audio track.
•To record the regular sound (ordinary normal sound) on the FM audio tracks when a Stereo, Bilingual or NICAM programme is received, select **Mono ON** during manual tuning procedure. See page 28.

Important Note for the NICAM System
When NV-HD620EC is switched on, the tuner will automatically switch to a NICAM broadcast, if NICAM is being transmitted. During test transmissions, it is possible that the sound received doesn't correspond to the picture being viewed. In order to receive a synchronized sound and picture, select monaural sound with **AUDIO OUT** or **Mono ON** setting. This will only apply until NICAM transmissions are fully operational.
Even if the sound track is in MONO, the stereo indicator will appear.

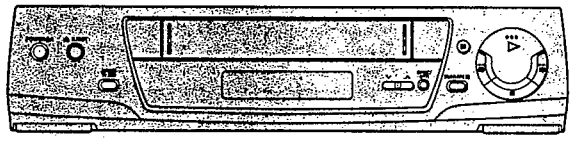

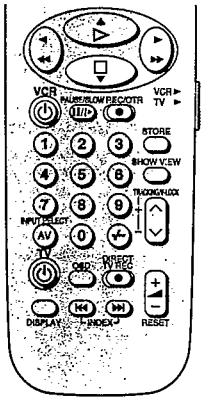

One-Touch Recording (OTR)

Whenever you are in a hurry to start a timer recording with automatic stop in your absence, simply set the recording duration with pressing **REC/OTR** repeatedly.
The indication of duration on the VCR display and On Screen Display changes by pressing **REC/OTR** as follows:

→Counter display (normal recording mode)→30 (min.)→60 (min.)→120 (min.)→180 (min.)→240 (min.)→

Preparation

Insert a video cassette tape with an intacterasure prevention tab.

Operations

1 Ready the video source which is to be recorded, and start recording.

2 Press **REC/OTR** repeatedly to select the desired recording duration.

REC/OTR

- The VCR will automatically switch off when OTR is completed. To turn the VCR on again, press **POWER ⏻/I (VCR ⏻)**.

Notes:
- The OTR function works during normal recording or Direct TV REC.
- When the tape reaches its end during OTR, the VCR will turn itself off.
- To stop OTR at any time, press □ **(STOP)** or **POWER ⏻/I (VCR ⏻)**.

Direct TV REC

When you want to record a TV programme while you are watching TV, simply press **DIRECT TV REC**.

However, this function works only when this VCR is connected to **a TV with the "NEXTVIEWLINK", "Easy Link" or "Megalogic"-logo using the fully-wired 21-pin scart cable.**

Preparation

Insert a video cassette tape with an intact erasure prevention tab.

Operation

When you are watching TV and you want to record the programme quickly, press **DIRECT TV REC**.
Then the recording will start.

DIRECT TV REC

- It is not necessary to adjust the programme position of *your VCR to the TV station that you are watching now.*

Notes:
- Even if the programme positions are not the same, the programme position of the VCR switches to the same position of the TV. Upon completion of the recording, the programme position of the VCR returns to the previous position.
- Do not use **AV LINK** during Direct TV REC, as recording may not be performed normally.
- In some cases, it may not be possible to change the TV channel during Direct TV REC.
- Check beforehand whether the tape may be used for recording.

Timer Recording

ShowView Programming

Programming is now easier than ever: simply enter the ShowView number provided in the programme schedule column carried by newspapers and magazines.
ShowView numbers are numbers which are assigned to each programme listed in the TV programme schedule carried in newspapers and TV guides. When these numbers are entered and **STORE** is pressed, the numbers are converted into the actual programming.

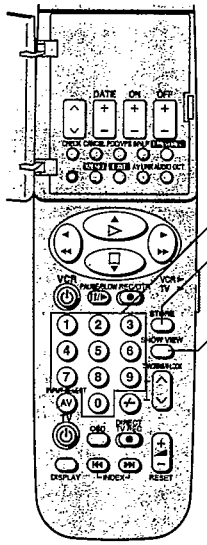

Preparations

- Insert a cassette tape with an intact erasure prevention tab.
- Confirm that the TV is on and the VCR viewing channel is selected.

Operations

1 Press **SHOW VIEW.**

SHOW VIEW

2 Enter a ShowView number.
Example: 920216
- Ensure that the **VCR/TV** switch is set to **VCR**.

3 Press **STORE.**

STORE

On Screen Display

- To extend the ending time or to make any corrections, use buttons ▲ ▼ ◀ ▶ or ∨ ∧, **DATE, ON, OFF.**
- See page 24 for VPS/PDC recording.

If the "––" appears in the programme position: select the programme position of your VCR which receives the TV station you entered at step **2** using button ▲ ▼ or ∨ ∧.

- After several seconds have elapsed, the message display at the bottom of the On Screen Display is replaced by the operation guide display.
- Once programming is performed after the programme position has been selected here, the guide channel will be automatically stored so that the correct position will appear when the ShowView code for this station is next entered.

4 Press **STORE** to confirm.

STORE

- The VCR will be in the timer recording standby mode after about 20 seconds, if **STORE** is not pressed.

Notes:
- To release from the standby mode, press **TIMER REC.**
- When the ShowView number is used for programming, the recording time may be slightly longer than the actual programme time.
- When programming two or more programmes, repeat steps **1–4**.
- The procedures for checking and cancelling a timer programme are the same as on page 23.

Using On Screen Display

Up to 8 timer programmes can be recorded up to one month in advance by setting the timer, including weekly and daily programmes.

Preparations

- Insert a cassette tape with an intact erasure prevention tab.
- Confirm that the TV is on and the VCR viewing channel is selected.

For Example:

Programme position (channel);	2
Date;	27th, October
Starting time;	20:02
Ending time;	21:30
(Present date; 16th, October)	

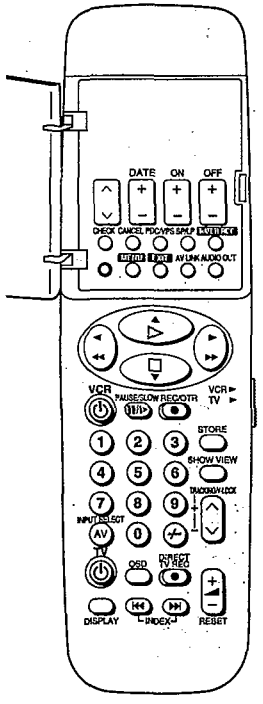

Follow the operation guide on screen display.

Operations

1 Press **MENU**, and then select **Timer recording.**

On Screen Display

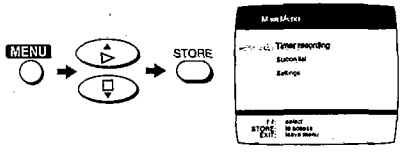

2 Select the unoccupied position.

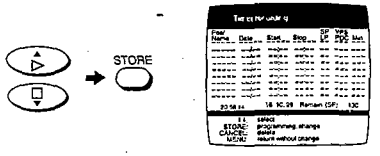

3 Set **Programme position** (channel) "2".

- An alternative method is to press ▲ ▼ ◄ ►.

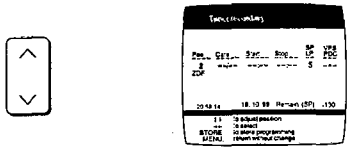

4 Set **Date** "27/10".

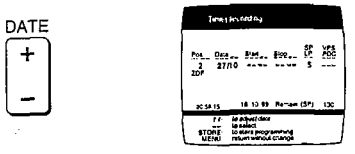

5 Set **Starting time** "20:02".

- When it is kept pressed, the indication changes in 30-minute steps.

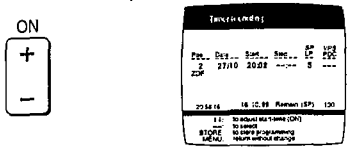

6 Set **Ending time** "21:30".

On Screen Display

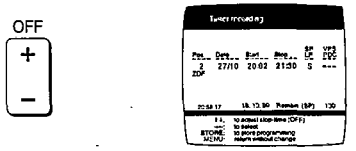

7 Select the desired **Tape speed (SP/LP).**

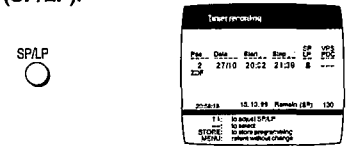

8 Select **VPS/PDC ON** or **OFF (----).**

- See page 24 for VPS/PDC recording.

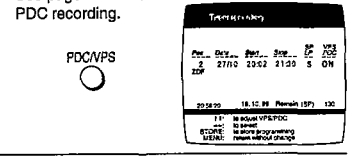

9 Press **STORE.**

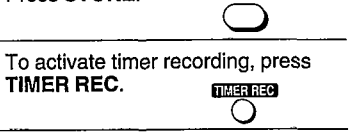

10 To activate timer recording, press **TIMER REC.**

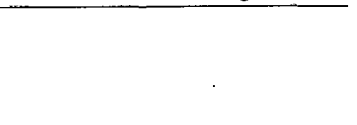

Weekly Timer Recording

In step 4, select the desired day by pressing **DATE –**.

Daily Timer Recording

For this timer function, several groups of days can be selected.

Ⓐ Daily recording from Monday to Friday

Ⓑ Daily recording from Monday to Saturday

Ⓒ Daily recording from Sunday to Saturday

In step 4, select the desired days by pressing **DATE –**.

Timer Recording from External Signal Source

If Timer Recording is performed by a unit connected to the AV1 (TV) or AV2 (DECODER/EXT) Socket, select the A1 or A2 for the programme position.

A1: Through the AV1 (TV) socket.

A2: Through the AV2 (DECODER/EXT) socket.

Setting other Programmes in Succession

Repeat steps **2–9**.

Checking a Timer Programme

- The VCR must be turned on, or the timer recording indicator "⊡" is lit.
- Confirm that the TV is on and the VCR viewing channel is selected.

Press **CHECK.**

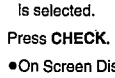

- On Screen Display may be distorted in the PDC/VPS recording standby mode.

On Screen Display

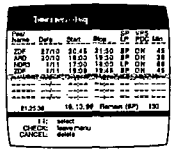

Cancelling a Timer Programme

- The VCR must be turned on, or in timer recording standby mode.
- Confirm that the TV is on and the VCR viewing channel is selected.

1 Press **CHECK.**

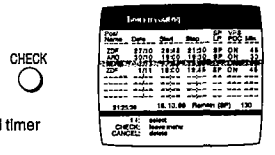

2 Select the desired timer programme.

3 Press **CANCEL.**

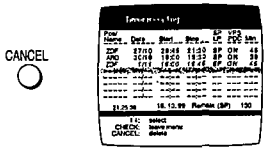

Notes:

- If a timer recording is not performed to the end (due to insufficient tape or cancellation by the user), the programmed timer recording data will be cancelled from the memory by 4 a.m. the next day.
  However, if the Timer Record Function is activated at that time, the programmed timer recording data will be cancelled at 4 a.m. the next day.
- Either the Position number or the Station name is displayed here.

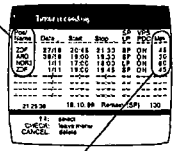

- For daily and weekly timer recording, the recording time for only one recording session is displayed.

Checking the remaining tape time

- This displays the remaining time for the inserted tape.

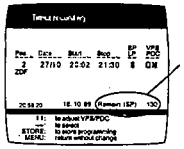

- This indicator is not displayed unless the remaining tape time has already been indicated on the VCR display. Refer to page 19.

PDC (Programme Delivery Control)/VPS (Video Programme System)

The Programme Delivery Control (PDC) or the Video Programme System (VPS) is a very convenient system which assures that the TV programmes you have programmed for timer recording will be recorded exactly from beginning to end, even if the actual broadcasting time differs from the scheduled time due to delayed start or extension of the programme duration. Also, if a programme is interrupted and, for example, some special news are inserted, the recording will also be interrupted automatically and resumed when the programme continues.
Depending on the signals sent from the broadcasting stations, the PDC/VPS system may not operate properly even when **VPS/PDC** has been set to **ON**. Please check with the broadcasters in your area for details.

- In the case of PDC/VPS recording, use the **correct** time (PDC/VPS time) for recording the TV programmes. PDC/VPS recording is not performed when the time (PDC/VPS time) is incorrect, even if only by one minute. To find out the correct time (PDC/VPS time), consult Teletext, a newspaper or magazine, etc.
- If the actual broadcasting times of timer recordings overlap (regardless of whether they are PDC/VPS controlled), the recording that starts first has always priority, and the recording of the later beginning programme will start only after the first timer recording has finished.
- When the PDC/VPS signal drops out because the broadcast signal is weak, or when a broadcasting station does not transmit a regular PDC/VPS signal, the timer recording will be performed in the normal mode (without PDC/VPS) even if it was programmed for PDC/VPS.
  In this case, even if the timer recording is performed, whatever has been programmed will not be cancelled at that particular time but at 4 a.m. on the following day.
- The start times of scheduled programmes listed in the newspaper or magazine may be changed at a later date. Set **VPS/PDC** to **OFF** when programming a programme whose start time has been subsequently changed. Particular care must be taken in this respect with ShowView programming since **VPS/PDC** is automatically set to **ON** in some countries.
- If a programme listed in a newspaper or magazine has two ShowView numbers, use the ShowView number for VPS/PDC if you wish to proceed with VPS/PDC recording using ShowView programming.
- The default setting for **VPS/PDC** differ depending on the country concerned. Refer to the table shown below.

Country / Programming method	France, Belgium, Netherlands, Sweden, Denmark, Finland, Norway	Germany, Switzerland, Austria, etc.	Italy, Spain, Portugal
ShowView programming	ON	ON	OFF
Changes in ShowView programming	OFF	ON	OFF
Using the remote controller	OFF	ON	OFF
Using the on-screen display	OFF	ON	OFF

After auto tuning, "---" appears for the **VPS/PDC** item at the outset in the case of a broadcasting station which is not transmitting VPS/PDC signals.

Other Functions

On Screen Display

Press **OSD** to make the On Screen Display appear on the TV screen.

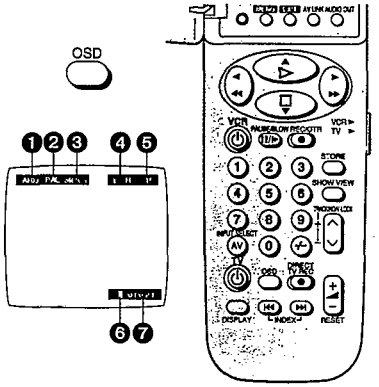

❶ **TV station**

❷ **TV system**

❸ **Stereo or Bilingual Indicator (NV-HD620EG)**
When receiving a TV programme, the type of sound system in which it is broadcast is automatically indicated.

Stereo, M1 and M2 Indicator (NV-HD620EC)
When receiving a TV programme with the Stereo, Bilingual or NICAM sound system, the type of sound system in which it is broadcast is automatically indicated.
Stereo: When receiving a Stereo/NICAM stereo broadcast.
M1 M2: When receiving a Bilingual/NICAM dual-sound broadcast.
M1: When receiving a NICAM monaural broadcast.

❹ **Audio Output Mode Indicators**
The Left (L) and Right (R) Indicators show which sound mode is selected with **AUDIO OUT**.
Stereo: Both the L and R Indicators appear.
Left: The L Indicator appears.
Right: The R Indicator appears.
Normal: Both the L and R Indicators don't appear.

❺ **Tape speed indicator**

❻ **Tape running display**

Stop, Eject	■
Rewind	◀◀
Fast Forward	▶▶
Playback	▶
Recording	●
Repeat Playback	R

❼ **Present time/Tape counter/Remaining tape time/ Index Search/One-Touch Recording (OTR)**

Information	Display
Present time	17:24:31
Tape counter	−2:35.47
Remaining tape time	REMAIN 2:34
Index Search	▶▶02
One-Touch Recording (OTR)	OTR 60

Notes:

- When the item **"On screen display"** is set to OFF (See page 32.), the On Screen Display will not appear.
- When the programme position AV is selected or during playback, the On Screen Display (❶, ❷, ❸) will not appear.
- The On Screen Display does not appear during special playback.

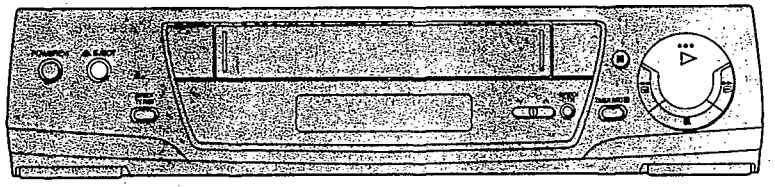

VHS Index Search System

It is very easy to find the beginning of each recording, because a special index signal is recorded at the start of each recorded segment on the tape.

For example:
Searching for the 2nd recorded segment in the forward direction.

Press **INDEX** ⏭ twice.
(This operation is performed while the VCR is in the stop mode or normal playback mode)

Display Symbol

- After finding the specific recorded segment, playback starts automatically.
- For the reverse direction, press **INDEX** ⏮.
- Up to 20 index signals can be searched for in both directions.
- When the opposite **INDEX** button is pressed, the number shall be decreased till 1.
- The figure on the display is decremented by 1 each time an index signal is located.
- The INDEX search function can only work correctly, if the index signals are spaced at least 3 minutes apart in the SP mode and 5 minutes apart in the LP mode.

Recording Index Signals
Index signals are recorded in following cases.
- When a recording is started by pressing **REC/OTR**.
- When timer recording is activated.

Other Automatic Functions

Automatic Playback
When a cassette without an erasure prevention tab is inserted, the VCR starts playback automatically.

VCR-off Playback
When the VCR is off, an inserted cassette can be played back by pressing ▷ **(PLAY)**.

Automatic Rewinding
When the tape reaches its end during recording (except for timer recording) or playback, it will automatically be rewound to the beginning.
- During One-Touch Recording (OTR), this function will not work.

Automatic Switching Off and Ejection
When the VCR is switched off, and inserted cassette can be ejected simply by pressing **EJECT**. The VCR will eject the cassette and automatically turn itself off again.

Editing

Assembly Editing

This function can be used to make up an edited tape from other recordings or video sources.

A new scene can be added to the end of a previous one.

Preparations
- Connect a movie camera or another VCR to this VCR as shown.
- Insert a recorded cassette tape with an intact erasure prevention tab.
- Select the video source required by pressing **INPUT SELECT** to set A1 or A2.
  Ensure that the **VCR/TV** switch is set to **VCR**.
  A1: Through the AV1 (TV) socket.
  A2: Through the AV2 (DECODER/EXT) socket.

Recording VCR

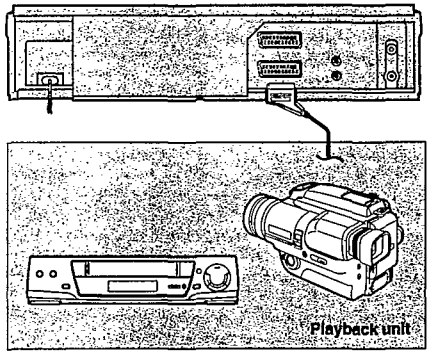

Operations

1 Search for the end of the previous recording.

2 Press **PAUSE/SLOW** or **❚❚ (PAUSE/STILL)**.

PAUSE/SLOW

3 Press **REC/OTR** to switch the VCR from the pause mode to the recording standby mode.

REC/OTR

4 Start the new recording by pressing **PAUSE/SLOW** or **❚❚ (PAUSE/STILL)** again.

PAUSE/SLOW

5 Press □ **(STOP)** to stop recording.

Note:
The new sound will be recorded on both the normal and Hi-Fi sound tracks, only monaural sound recording is possible on the normal sound tracks.

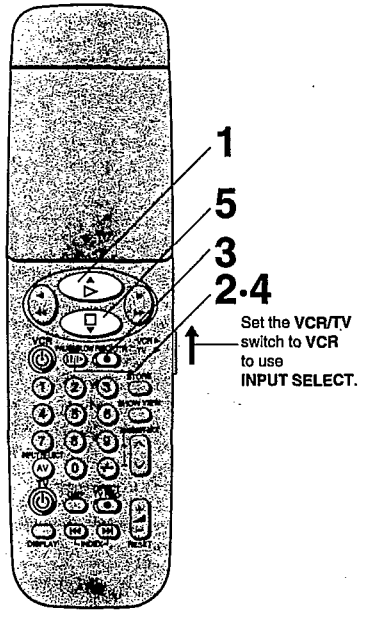

Storing TV Broadcasts into your VCR

Introduction

The VCR is fitted with its own tuner (just like a normal TV set) and can be pre-set to receive up to 99 TV broadcast stations.
If VCR is not correctly tuned by Auto setup, follow the procedure below.

Preparations

- Confirm that the TV is on and the VCR viewing channel is selected.
- Turn on the VCR.

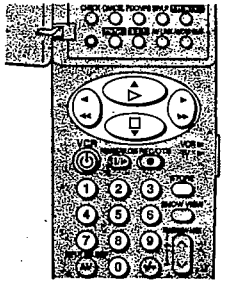

Set the **VCR/TV** switch to **VCR** to use the **numeric buttons.**

Manual Tuning Procedure

Follow the operation guide on screen display.

Operations

1 Press **MENU.**

2 Select **Settings.**

On Screen Display

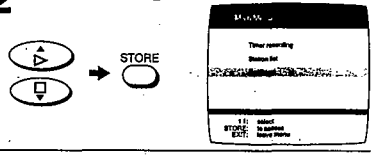

3 Select **Tuning.**

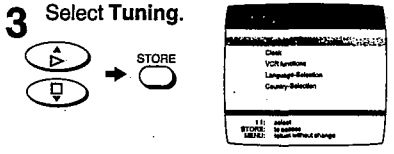

4 Select **Manual.**

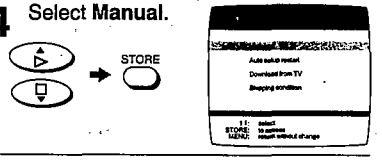

5 Select desired programme position.

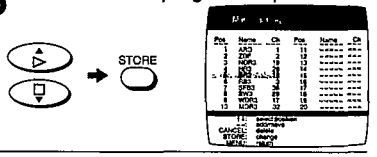

6 Select Channel **(Ch).**

- Ensure that the **VCR/TV** switch is set to **VCR.**

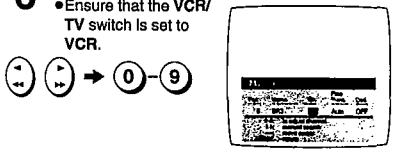

7 Select **Dec ON** or **Dec OFF.**

ON: To preset pay TV stations.
OFF: To preset normal TV stations.

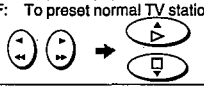

8 Use ◄ ► to display the next screen.
Select **TV System.**

PAL: For receiving PAL signal.
MESECAM: For receiving SECAM signal.

NV-HD620EC only

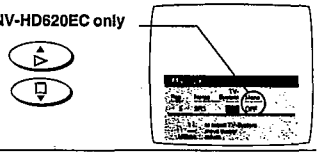

9 **NV-HD620EC only**
Select **Mono OFF.**

- Select **Mono ON** to record the normal sound during a stereo, bilingual or NICAM broadcast or if the stereo sound is distorted due to inferior reception conditions.

10 Press **MENU**, and then press **EXIT.**

Notes:

- When channels have been set with manual tuning, the channel position **(Ch)** will need to be entered in the highlighted box the first time ShowView is used.
- When **Preset Download (Download from TV)** has been executed, do not perform Manual Tuning.
  This is because when the tuning contents for the TV are changed, this information is downloaded to the VCR again, thereby erasing the independent contents input by Manual Tuning.

When changing (moving) the programme position, adding "Blank" position and deleting stations;

It is possible to do them easily by following the indications of On Screen Display.

On Screen Display

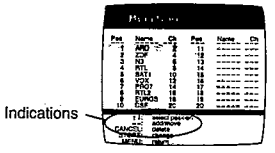

Press ▲ or ▼ to select the desired programme position (station), and then follow the steps indicated below.
←: Press ◄ to add "Blank" position.
→: Press ► to change (move) the programme position.
CANCEL: Press **CANCEL** to delete the stations.

- These indications do not appear after performing **Preset Download (Download from TV).**

To change the TV station name:

After step 5 but before step 8, select the TV station name **(Name)** item using ◄ ►, and then make the desired change. (See page 15.)

Channel Plan

Channel Indication	TV Channel Germany/Italy	TV Channel Other Countries
2–12	*E2–E12	E2–E12
13–20	A–H (Only Italy)	——
21–69	21–69	21–69
74–78	S01–S05	S1–S5
80–82	S1–S3	M1–M3
83–89	S4–S10	M4–M10
90–99	S11–S20	U1–U10
121–141 Hyperband	**S21–S41	S21–S41

*In Italy: H1...(11), H2...(12)
**Only for 8 MHz channel raster

Fine Tuning Procedure

Follow steps 1 to 5 on page 28.

6 Select **Fine Tune.**

7 Press ▲ or ▼ to obtain the best tuning condition.

- To return the tuning to its former state, press **STORE.**

On Screen Display

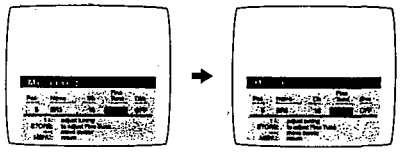

8 Press **MENU**, and then press **EXIT.**

Auto Setup Restart

When your address changes, follow the procedure below.
Follow the steps **1** to **3** on page 28.

4 Select **Auto setup restart.**

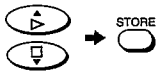

On Screen Display

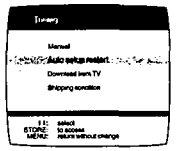

5 Press **STORE.**

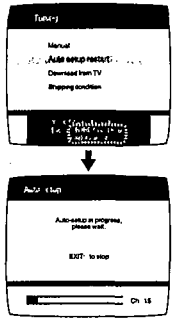

Download from TV

To perform the downloading again, follow the procedure below in the stop mode.
Follow steps **1** to **3** on page 28.

4 Select **Download from TV.**

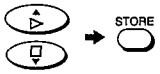

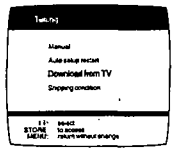

5 Press **STORE.**

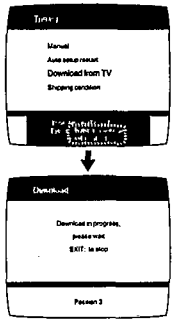

Shipping Condition

If you want to return the VCR to the factory-preset condition, follow the procedure below.
Follow the steps **1** to **3** on page 28.

4 Select **Shipping condition.**

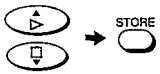

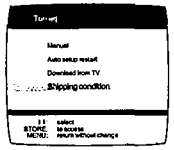

5 Press **STORE.**

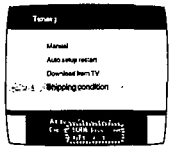

6 Press **STORE** again.

Note:
To re-tune the VCR, disconnect and then reconnect the mains lead. If the VCR is off, turn on the VCR and then repeat the procedures on pages 11 to 15.

Setting the Clock of your VCR

The built-in clock is used to activate the timer for automatic recording and must be set to the correct time.

The built-in digital clock employs the 24-hour system.

If VCR is not correctly set by Auto setup, follow the procedure below.

Preparations

- Confirm that the TV is on and the VCR viewing channel is selected.
- Turn on the VCR.

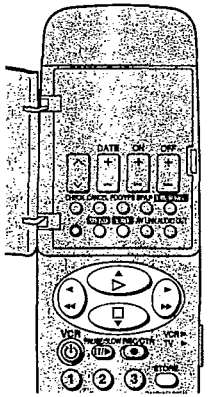

Manual Clock Setting

Follow the operation guide on screen display.

Operations

1 Press **MENU**, and then select **Settings.**

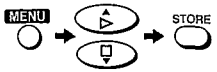

2 Select **Clock.**

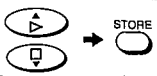

3 Select **Manual setting.**

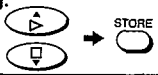

4 Set **Time (H/M).**
- When it is kept pressed, the indication changes in 30-minute steps.
- Press ◀ to return to the previous item.

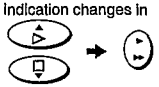

5 Set **Date (D).**

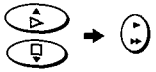

6 Set **Month (M).**

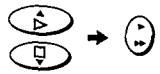

7 Set **Year (Y).**
- There is no need to press ▶.

On Screen Display

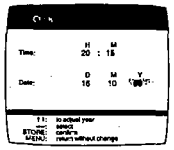

8 Press **STORE.**
- The clock will start.

9 Press **EXIT.**

Automatic Clock Setting

Follow steps **1** to **2** of the above procedure.

3 Select ***Automatic setting.***

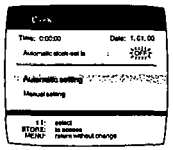

4 Press **STORE.**
- The clock is set automatically.

Notes:
- The clock operates for at least 60 minutes by its backup system in the event of power failure.
- When the item **"Automatic clock-set is"** is ON on screen display, Automatic time correcting function is activated.
  The Automatic time correcting function is only activated when the power is off. This function is not activated during timer recording standby mode.

Settings Using On Screen Display

Preparations

- Confirm that the TV is on and the VCR viewing channel is selected.
- Turn on the VCR.

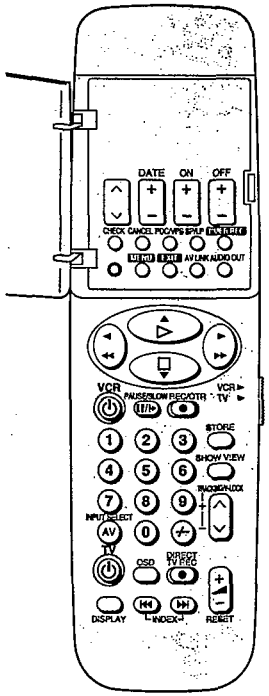

VCR functions

On Screen Display

1 Press **MENU**, and then select **Settings**.

On Screen Display

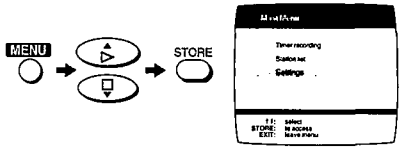

2 Select **VCR functions**.

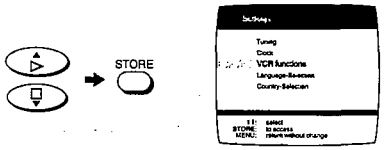

3 Select **On screen display**.

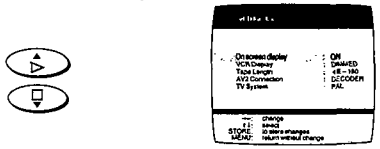

4 Select **ON** or **OFF**.

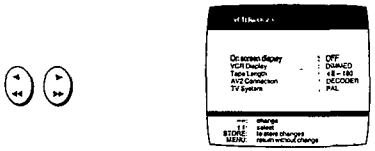

ON: The On Screen Display will appear on the TV screen by pressing **OSD**.
OFF: The On Screen Display will not appear even if **OSD** is pressed.

5 Press **STORE**, and then press **EXIT** to make On Screen Display disappear.

VCR Display

Follow steps **1** and **2** on page 32.

3 Select **VCR Display**.

On Screen Display

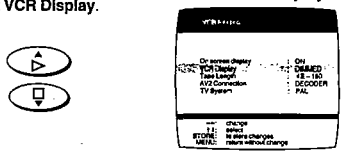

4 Select **ON**, **OFF** or **DIMMED**.

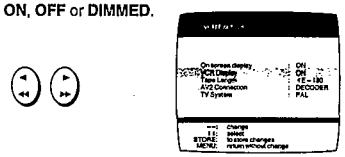

ON: When VCR is turned off, the characters are lit in the VCR display.
OFF: When VCR is turned off, the characters are not lit in the VCR display.
DIMMED: When VCR is turned off, the characters are dimmed in the VCR display.

5 Press **STORE**, and then press **EXIT** to make On Screen Display disappear.

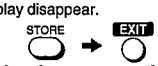

To select the Corresponding Cassette Tape Length for Displaying the Approximate Remaining Tape Time

Follow steps **1** and **2** on page 32.

3 Select **Tape Length**.

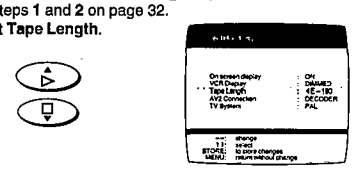

4 Select the corresponding cassette tape length.

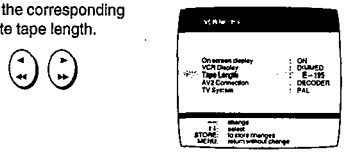

◀ E-180: For E30, -60, -90, -120 and -180 tapes.
E-195: For E195 tape.
E-240: For E240 tape.
E-260 ▶: For E260 and -300 tapes.

- The times displayed may differ depending on the tape used.

5 Press **STORE**, and then press **EXIT** to make On Screen Display disappear.

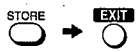

AV2 Connection

Follow steps **1** and **2** on page 32.

3 Select **AV2 Connection**.

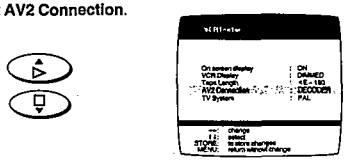

4 Select **EXT** or **DECODER**.

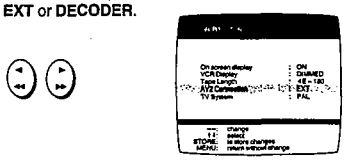

EXT: When another VCR is connected to the AV2 (DECODER/EXT) socket.
DECODER: When the decoder is connected to the AV2 (DECODER/EXT) socket.

5 Press **STORE**, and then press **EXIT** to make On Screen Display disappear.

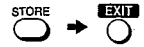

To set the Colour TV System

Follow steps **1** and **2** on page 32.

3 Select **TV System**.

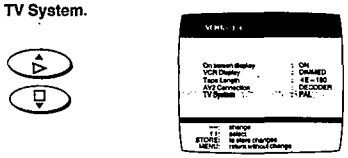

4 Select **PAL** or **MESECAM**.

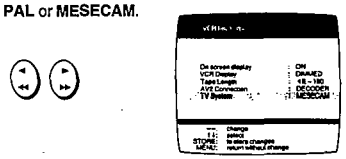

- Set according to the colour TV system used during playback or external recording.

5 Press **STORE**, and then press **EXIT** to make On Screen Display disappear.

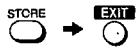

Language-Selection

To change the language setting for On Screen Display, follow the steps bellow.

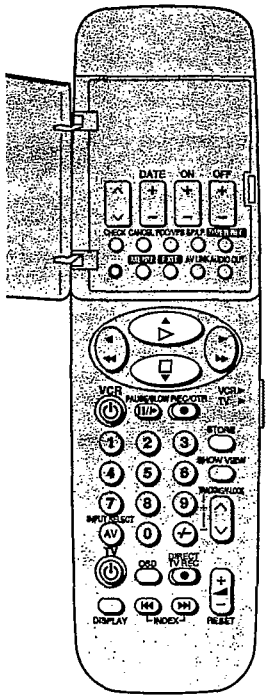

1 Press **MENU**, and then select **Settings**.

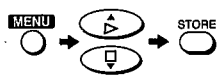

On Screen Display

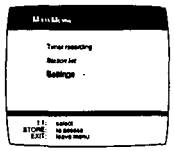

2 Select **Language-Selection**.

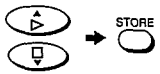

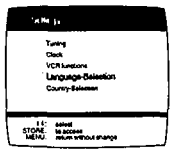

3 *Select the desired language.*

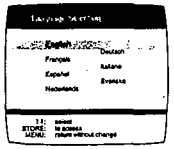

4 Press **STORE**, and then press **EXIT**.

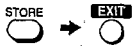

Country-Selection

To change the country setting, follow the steps bellow.

1 Press **MENU**, and then select **Settings**.

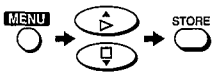

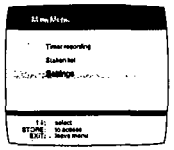

2 Select **Country-Selection**.

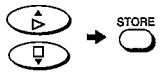

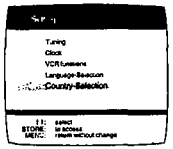

3 Select the desired country.

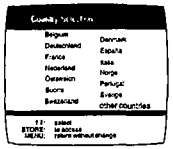

- When Switzerland or Belgium has been selected, operation moves to the screen which follows. Select the desired item.

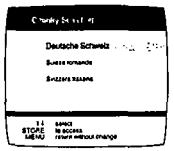

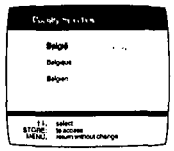

4 Press **STORE**, and then press **EXIT**.

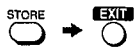

Precautions

Please read these cautions before you operate this VCR.

Avoid Sudden Changes in Temperature

If the VCR is suddenly moved from a cold place to a warm place, condensation may form on the tape and inside the VCR.

Humidity and Dust

Avoid places where there is high humidity or much dust, which may cause damage to internal parts.

Do Not Obstruct the Ventilation Holes

The ventilation holes prevent abnormal increase in temperature. Do not block or cover these holes. Especially avoid covering the holes with soft materials such as cloth or paper.

Keep away from High Temperature

Keep the VCR away from extreme direct heat such as direct sunlight, heating radiators, or closed automobiles.

Keep Magnets away

Never bring a magnet or magnetized object near the VCR because it will adversely affect the performance of the VCR.

No Fingers or Other Objects Inside

Touching internal parts of this VCR is dangerous, and may cause serious damage to the VCR. Do not attempt to disassemble the VCR. There are no user serviceable parts inside.

Keep Water away

Keep the VCR away from flower vases, tubs, sinks, etc. CAUTION: If liquids are spilled into the VCR, serious damage could occur. If you spill any liquid into the VCR, consult qualified service personnel.

Lightning

To avoid damage by lightning, disconnect the aerial plug from the VCR.

Cleaning the VCR

Wipe the VCR with a clean, dry cloth. Never use cleaning fluid, or other chemicals. And do not use compressed air to remove dust.

Stacking

Place the VCR in a horizontal position, and do not place anything heavy on it.

Video Head Clogging

The video heads place picture signals on the tape during recording and read picture signals from the tape during playback and they are, therefore, of critical importance for the picture quality. If the VCR is used over extremely long periods of time, these heads may become dirty and clogged. In such a case, the signals can no longer be recorded correctly, and the playback picture will be distorted accordingly. This is the case, for example, during the playback of a tape, the sound is reproduced normally, but no picture is seen, or the picture is greatly distorted. When such a symptom case occurs have the recorder checked by qualified service personnel.

Condensation may form in the VCR if:

- The VCR is in a room where the heater has just been turned on.
- The VCR is in a room with steam or high humidity.
- The VCR is brought from cold surroundings into a well-heated room.
- The VCR is suddenly brought from cool surroundings, such as an air-conditioned room or car, to a place which is hot and humid.

Note:
Do not operate the VCR for at least 1 hour if any of the above conditions occur.
This VCR does not incorporate a dew sensor.

SECTION 2
ADJUSTMENT PROCEDURES

2-1. DISASSEMBLY METHOD

2-1-1. DISASSEMBLY FLOW CHART

This flow chart indicates disassembly steps of the cabinet parts and the circuit boards in order to find the necessary items for servicing.
When reassembling, perform the steps in the reverse order.

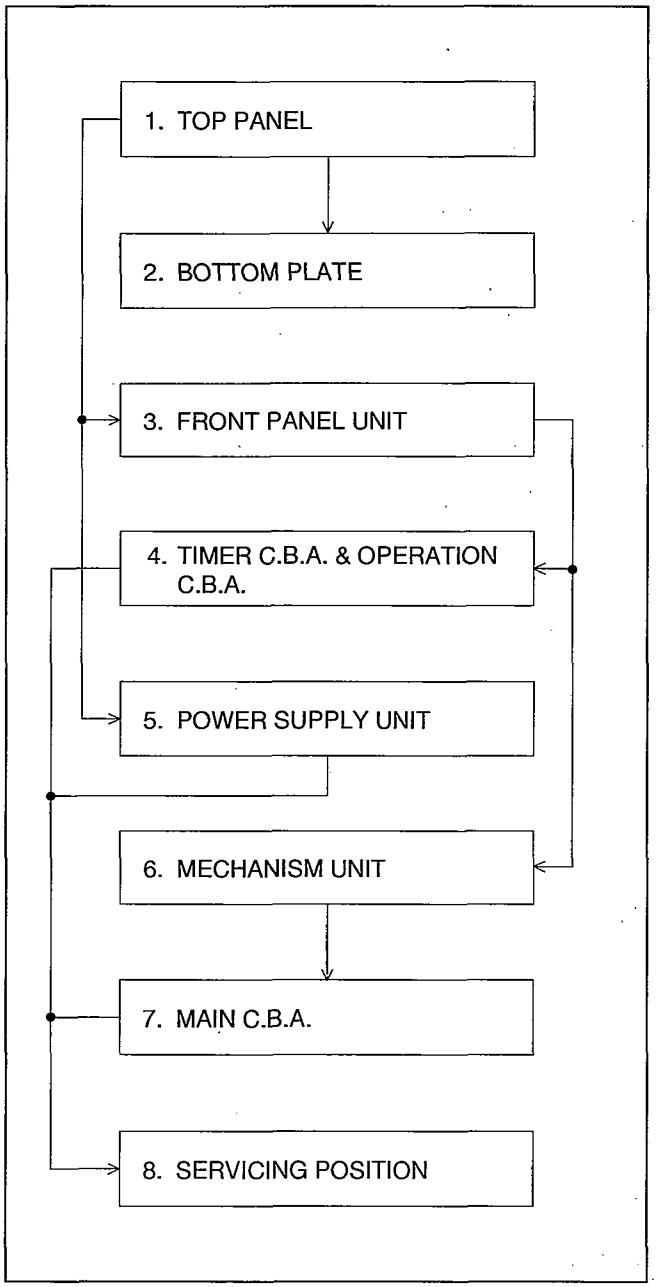

Fig. D1

2-1-2. DETAIL OF DISASSEMBLY METHOD

1. REMOVAL OF THE TOP PANEL

   Remove..... 4 Screws (A)

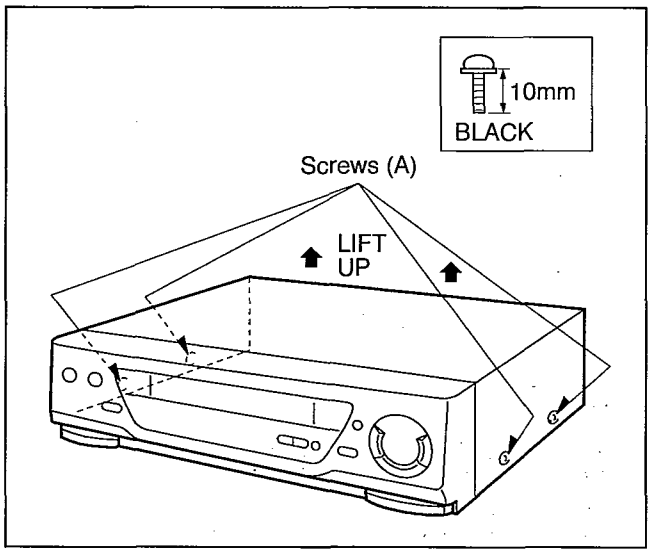

Fig. D2

2. REMOVAL OF THE BOTTOM PLATE

   Unlock ..... 6 tabs (B)

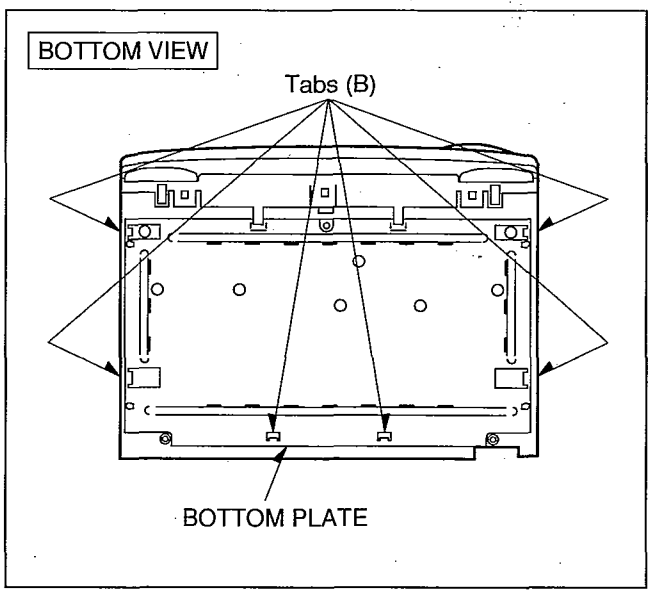

Fig. D3

3. REMOVAL OF THE FRONT PANEL UNIT

Unlock ..... 11 Tabs (C)

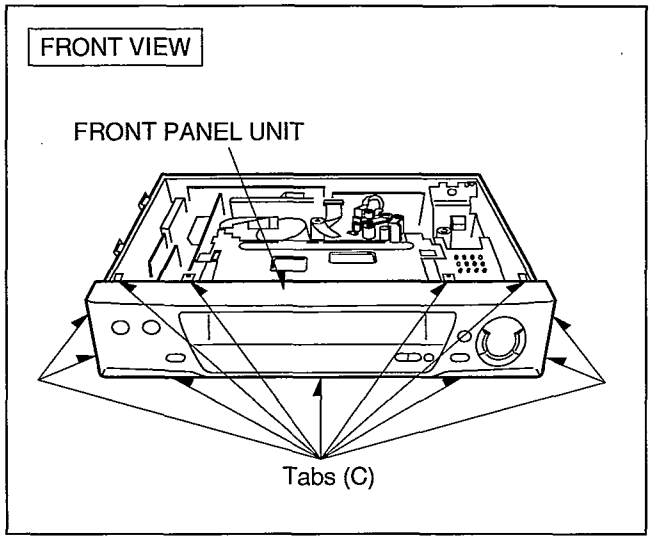

Fig. D4

4. REMOVAL OF THE TIMER C.B.A. & OPERATION C.B.A.

REMOVAL OF THE TIMER C.B.A.
Disconnect.....Bridge connector (D)
Unlock..... 5 Tabs (E)

REMOVAL OF THE OPERATION C.B.A.
Disconnect.....Bridge connector (D)
Unlock..... 2 Tabs (F)

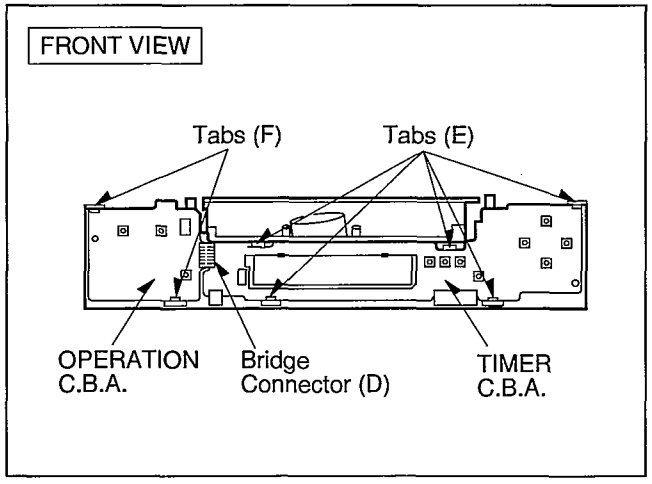

Fig. D5

5. REMOVAL OF THE POWER SUPPLY UNIT

Disconnect.....Bridge connector (G)
Unlock..... 5 Tabs (H)
Unlock..... 2 Tabs (I)

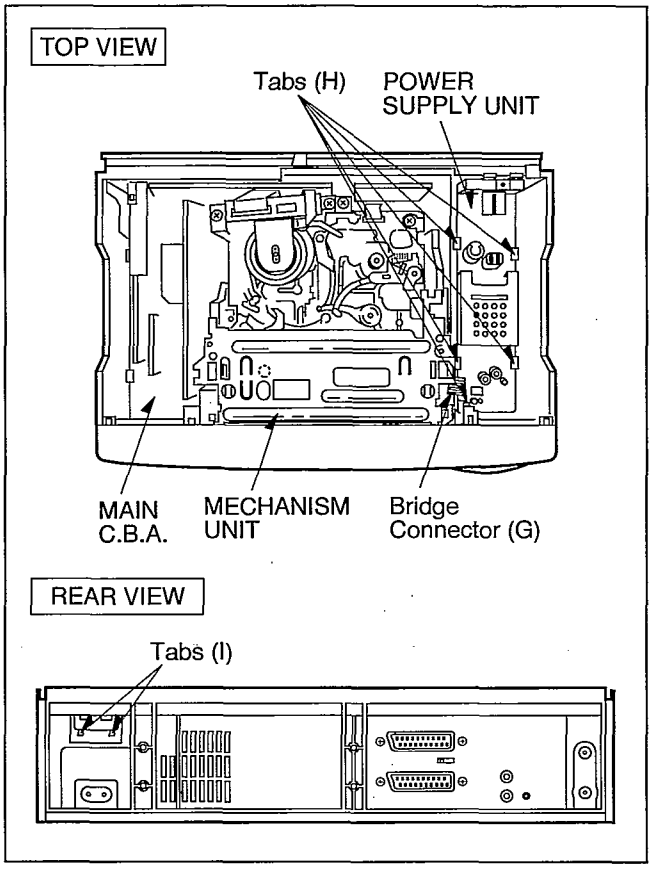

Fig. D6

CAUTIONS:
Please pay an attention to disconnect the connector (PS3006-P1102) which connected between Main C.B.A. and Power supply unit as shown below.

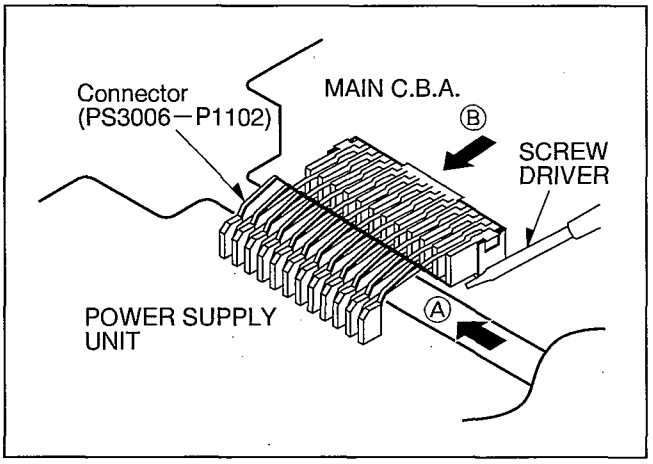

Fig. D7

As above drawing, disconnect the connector by SCREW DRIVER from the direction Ⓐ.
Do not disconnect from direction Ⓑ because it is possibility to damage the parts located by the connector.

6. REMOVAL OF THE MECHANISM UNIT

Remove ..... 3 Screws (J)
Remove ..... Screw (K)

7. REMOVAL OF THE MAIN C.B.A.

Disconnect ... Bridge connector (G) [Fig. D6]
Remove ..... 2 Screws (L)
Unlock..... 5 Tabs (M)

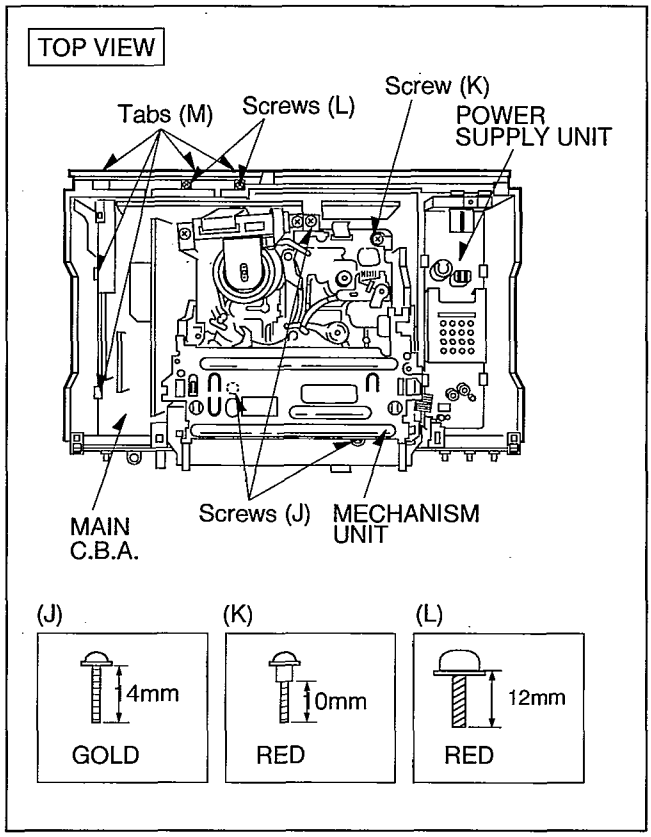

Fig. D8

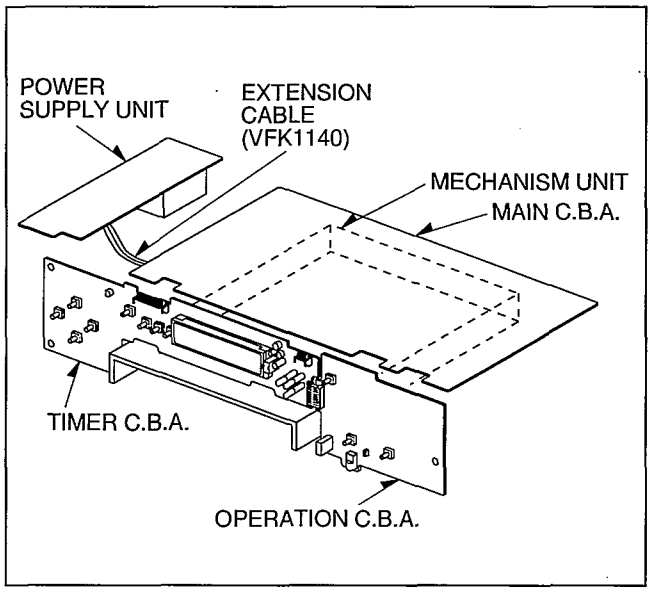

Fig. D9

2-2. MECHANICAL ADJUSTMENT PROCEDURES

The mechanical chassis of this model is the K Mechanical Chassis.
Therefore refer to the Service Manual for K Mechanical Chassis. (Order No. VRD9307M131)

CAUTIONS:

To make a Adjustment Mode for Tape Interchangeability, the Auto Tracking must be turned off.

(1) Press the FF and EJECT button to set the Service Mode 2.

LOCATION OF TEST POINTS & CONTROLS

MAIN C.B.A.

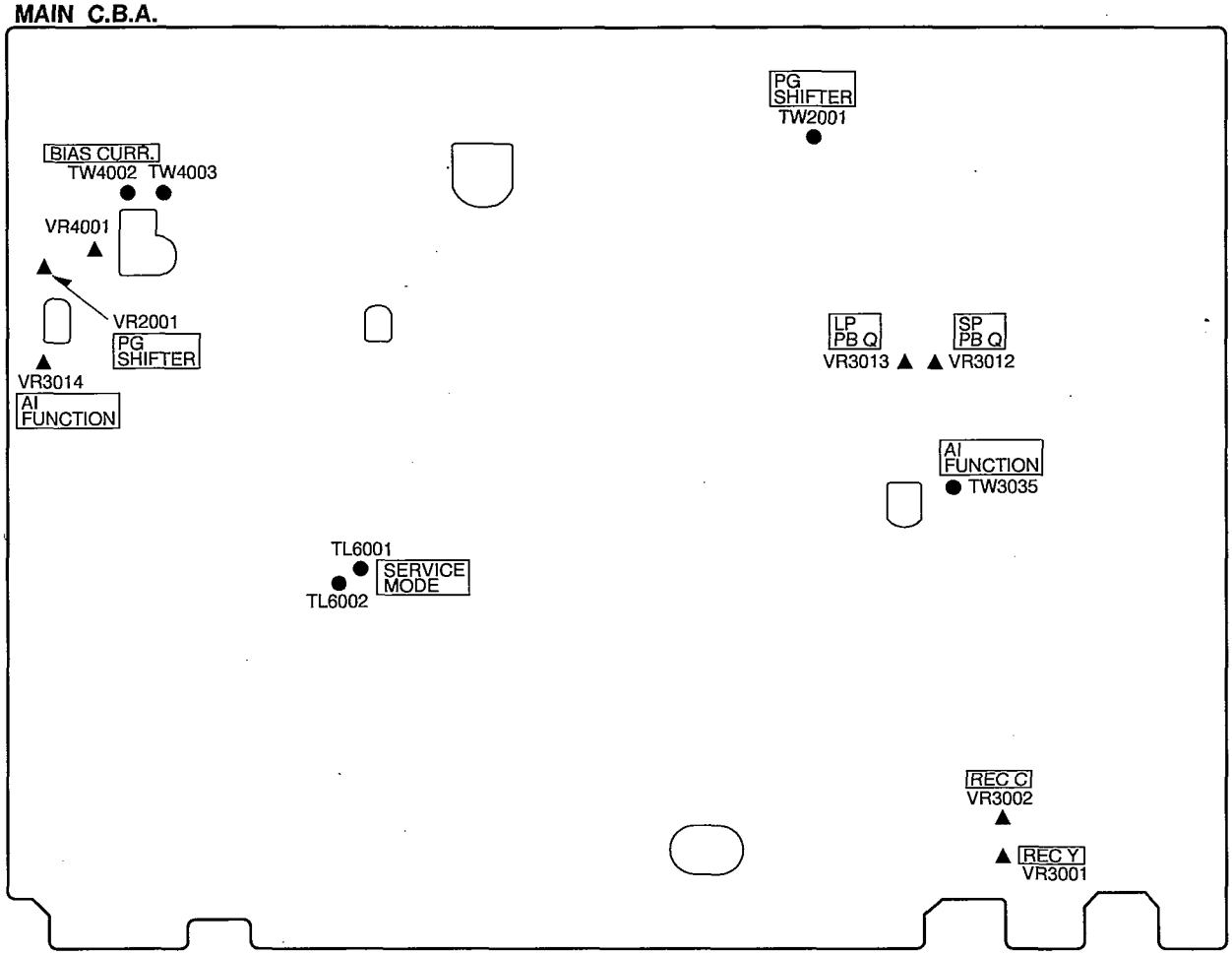

Hi-Fi AUDIO PACK C.B.A.

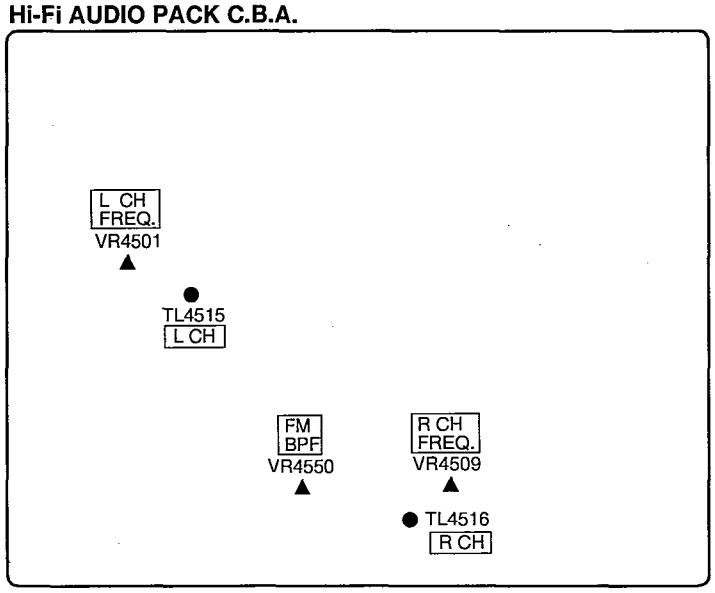

HEAD AMP C.B.A.

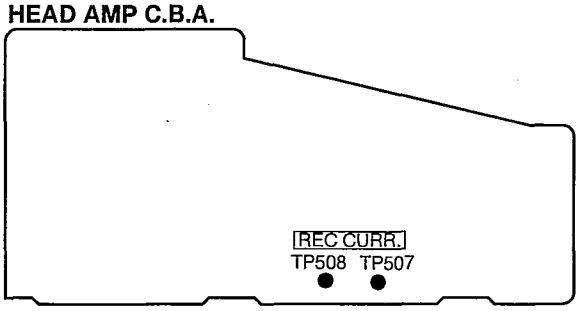

TIMER C.B.A.

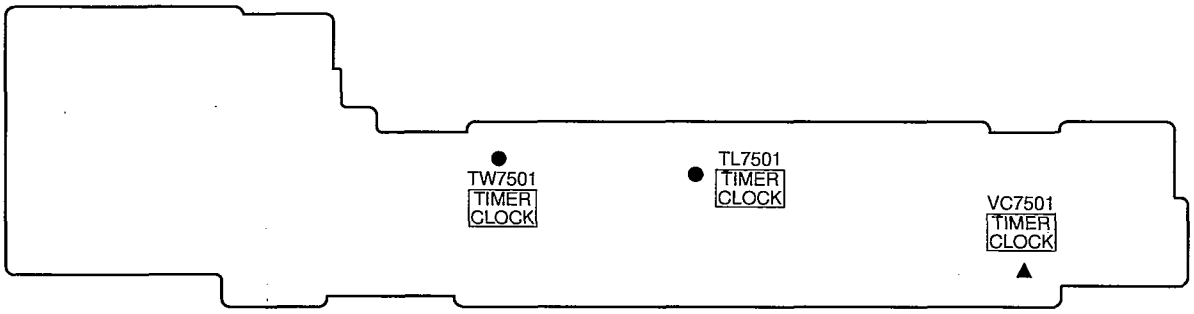

CIRCUIT BOARD LAYOUT

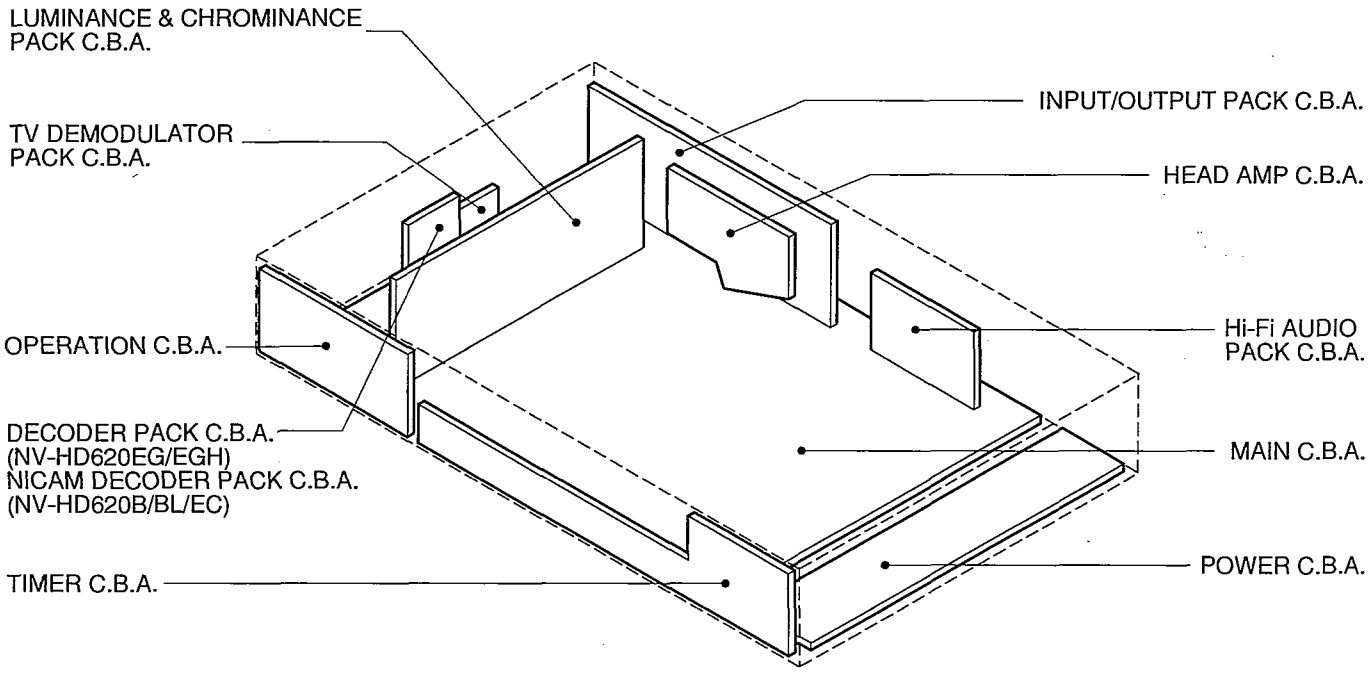

2-3. ELECTRICAL ADJUSTMENT PROCEDURES

2-3-1. TEST EQUIPMENT

The following equipments are required for Electrical Adjustments.

1. *Dual-Trace Oscilloscope* • Voltage Range: 0.005~5 V/div • Frequency Range: DC~35 MHz • Probes: 10:1/1:1	3. *Universal Counter*	8. *Monitor TV*
	4. Digital Volt Meter (D.V.M.)	9. DC Power Supply
	5. Video Sweep generator	10. VHS Blank tape
2. *Frequency Counter* • Frequency Range: 0~10 MHz • Probes: 1:1	6. Sinewave Generator	11. VHS Alignment Tape • Part No.: VFJ8125H3F (PAL) • Part No.: VFM8080HQFP (NTSC)
	7. Video Pattern Generator	

2-3-2. VCR SETTING

When no indication in the procedure, set each selector as follows.

1. CVC SW: ON
2. TAPE SPEED: SP
3. CHANNEL: AV1/AV2 (Set to signal input terminal number)
4. TEST SIGNAL SW (REAR): OFF

2-3-3. ADJUSTMENTS

ITEM	TP	ADJ.	MODE	INPUT	TAPE	M. EQ.	SPEC.	REMARKS
PG SHIFTER ADJUSTMENT	TW2001/ VIDEO OUT	VR2001	PLAYBACK	—	ALIGNMENT TAPE (PAL)	OSCILLO SCOPE	7.0+−0.5 (H) (See Fig. E1)	
RECORDING CURRENT ADJUSTMENT	TP507 (HOT) TP508 (CLD)	VR3001 (Y) VR3002 (C)	RECORDING	PAL COLOUR BAR	BLANK TAPE	OSCILLO SCOPE	Y: 140+−5 (mVp-p) C: 26+−2 (mVp-p) (See Fig. E2, E3)	1. Adjust the Luminance level until the peak level of V-SYNC is 140+−5mVp-p. 2. When adjusting the Chrominance level, supply +5V DC to PP3001-7 to eliminate Luminance component.
VIDEO FREQUENCY RESPONSE ADJUSTMENT	VIDEO OUT	VR3012 (SP) VR3013 (LP)	SP/LP PLAYBACK (SELF-REC)	VIDEO SWEEP	BLANK TAPE	OSCILLO SCOPE/ VIDEO SWEEP GENE.	SP: 0+−1 (dB) (90~110%) LP: 0+−1 (dB) (90~110%) (See Fig. E5)	1. Set the Video Sweep Signal. (See Fig. E4) 2. Set the CVC SW to OFF position.
AI FUNCTION ADJUSTMENT	TW3035	VR3014	PLAYBACK (SELF-REC)	PAL COLOUR BAR	BLANK TAPE	D.V.M.	2.5+−0.3 (V)	
BIAS CURRENT ADJUSTMENT	TW4002 (HOT) TW4003 (CLD)	VR4001	RECORDING	—	BLANK TAPE	D.V.M.	2.5+−0.1 (mVrms)	1. Connect the Audio Input and GND.
CARRIER FREQUENCY ADJUSTMENT	TL4515 (L) TL4516 (R)	VR4501 VR4509	RECORDING	—	BLANK TAPE	FREQ. COUNTER	L: 1400+−0.003 (KHz) R: 1800+−0.003 (KHz)	

ITEM	TP	ADJ.	MODE	INPUT	TAPE	M. EQ.	SPEC.	REMARKS
FM BPF ADJUSTMENT	TL4515 (L) TL4516 (R)	VR4550	PLAYBACK	SINEWAVE 1.608MHz 400mVp-p (PK4002-5)	ALIGNMENT TAPE	OSCILLO SCOPE/ SINEWAVE GENE.	TL4515 (L)=TL4516 (R)	1. Disconnect P501. 2. The GND lead of oscilloscope must be connected to GND on HIFI Audio C.B.A. to reduce the nise. 3. Supply the sinewave signal (1.608MHz/400mVp-p) to PK4002-5. 4. After this adjustment, connect P501.
TIMER REFERENCE CLOCK ADJUSTMENT	TL7501 (TW7501)	VC7501	STOP	—	—	UNIV. COUNTER	7812.5+−0.015 (usec)	

2-3-4. FIGURES

Fig. E1	Fig. E2	Fig. E3	Fig. E4
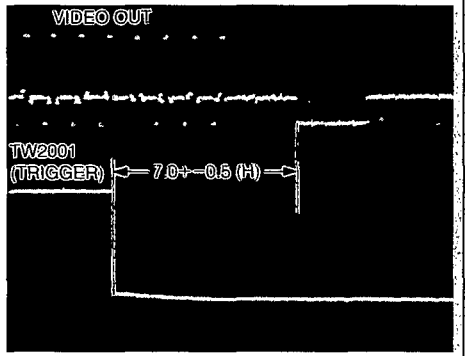	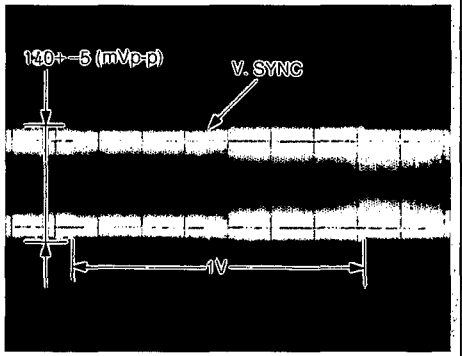	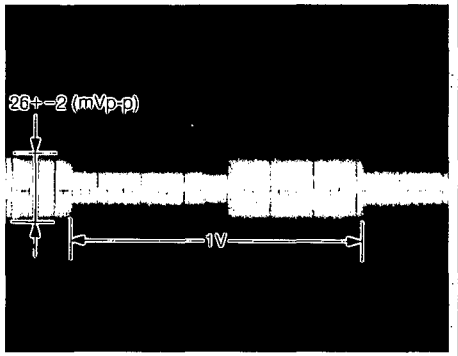	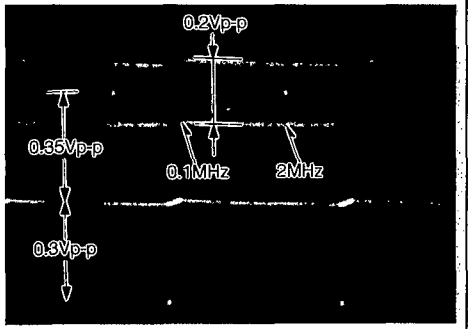 CONDITION: BURST SIGNAL OFF 75 ohm TERMINATED
Fig. E5			
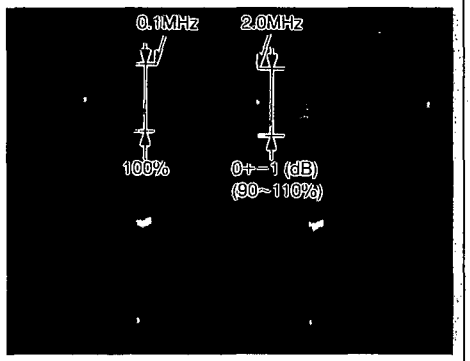			

Memo

SECTION 3
BLOCK DIAGRAMS & SCHEMATIC DIAGRAMS

3-1. ABBREVIATIONS

443NT [L]	4.43 NTSC Ⓛ	BIL	BILINGUAL
A. COMP	AUDIO COMPONENT SIGNAL	BIL [L]	BILINGUAL Ⓛ
A. COMPO	AUDIO COMPONENT SIGNAL	BIL. [H]	BILINGUAL Ⓗ
A. D.P [L]	AUDIO DUBBING PAUSE Ⓛ	BIL/M1 [L]	BILINGUAL Ⓛ
A. D/L [L]	AUDIO DUBBING PAUSE Ⓛ	BS CLOCK	BS CLOCK
A. DEF [S]	AUDIO DEFEAT	BS DATA	BS DATA
A. DEF [S] [L]	AUDIO DEFEAT	BS LCH IN	BS L CHANNEL INPUT
A. DUB P [L]	AUDIO DUBBING PAUSE Ⓛ	BS MIX [H]	BS MIX Ⓗ
A. DUB [H]	AUDIO DUBBING Ⓗ	BS MON [H]	BS MONITOR Ⓗ
A. ERASE	AUDIO ERASE	BS MONI [H]	BS MONITOR Ⓗ
A. H. SW	AUDIO HEAD SWITCHING PULSE	BS RCH IN	BS R CHANNEL INPUT
A. HEAD [R]	AUDIO HEAD (REC)	BS VIDEO	BS VIDEO SIGNAL
A. HEAD [W]	AUDIO HEAD (PLAY)	BS VIDEO/BS1	BS VIDEO SIGNAL
A. IN [L]	AUDIO INPUT (L)	BS [H]	BS Ⓗ
A. IN [R]	AUDIO INPUT (R)	BS. LEVEL	BS LEVEL
A. MUT [H]	AUDIO MUTE Ⓗ	BS. M [H]	BS MONITOR Ⓗ
A. MUTE [H]	AUDIO MUTE Ⓗ	BS/VTR [H]	BS/VTR Ⓗ
A. OUT [L]	AUDIO OUTPUT (L)	BUS CLK	BUS CLOCK
A. OUT [R]	AUDIO OUTPUT (R)	BUS LSN	BUS LISTEN
A. RF OUT	AUDIO RF SIGNAL OUTPUT	BUS TLK	BUS TALK
A/VS/S. DATA	AV SW/SERIAL DATA	BUZZER	BUZZER
AC ONLINE	AC ONLINE	CAP EC	CAPSTAN TORQUE CONTROL
AC. O/EE. H	AC ONLINE/EE Ⓗ	CAP M GND	CAPSTAN MOTOR GND
AFC S C	AFC S CURVE	CAP. ET	CAPSTAN TORQUE CONTROL
AFC [S]	AFC S CURVE	CAP. FG1	CAPSTAN FG1 PULSE
AFC. DEF	AFC DEFEAT	CAP. FG2	CAPSTAN FG2 PULSE
ARFC OUT	AUDIO RF SIGNAL OUTPUT	CAS. SW	CASSETTE SW
ART. V	ARTIFICIAL VERTICAL SYNC SIGNAL	CCN	PLAYBACK CONTROL SIGNAL (−)
ART. V. MM	ARTIFICIAL VERTICAL SYNC SIGNAL MONO MULTI	CCP	PLAYBACK CONTROL SIGNAL (+)
		CHM	CONTROL SIGNAL (+)
ART. V/H/N	ARTIFICIAL VERTICAL SYNC SIGNAL Ⓗ/NORMAL	CHP	CONTROL SIGNAL (−)
		CINEM [L]	CINEMA Ⓛ
AT. V/H/N	ARTIFICIAL VERTICAL SYNC SIGNAL	CINEMA [L]	CINEMA Ⓛ
ATSW/TEST/NOR/SE	TEST/NORMAL/SERVICE	CINEMA/MIX	CINEMA/MIX
AUDIO IN [L]	AUDIO INPUT (L)	CKL	RATCH LOCK
AUDIO IN [R]	AUDIO INPUT (R)	CKS	SHIFT LOCK
AUDIO OUT [L]	AUDIO OUTPUT (L)	CL	CLOCK
AUDIO OUT [R]	AUDIO OUTPUT (R)	CLK	CLOCK
AUDIO SELECT [H]	AUDIO SELECT Ⓗ	CLK (C.G)	CLOCK
AUDIO. L	AUDIO (L)	CLOCK. IN	CLOCK INPUT
AUDIO. R	AUDIO (R)	CLP	CLAMP
AV CNT	AV CONTROL	COL/B/W/NOR	COLOUR/BLACK & WHITE/NORMAL
AV CTL	AV CONTROL	COLOR [H]	COLOUR Ⓗ
AV CTL/S. CLK	AV CONTROL/SERIAL CLOCK	CONV	CONVERTOR
AV. C.M.	AV CONTROL MODE	CS	CHIP SELECT
AVCNT/METER. R	AV CONTROL/LEVEL METER (R)	CTL GND	CONTROL GND
AVSW/METER. L	AV SW/LEVEL METER (L)	CTL HEAD [+]	CONTROL HEAD (+)
B MODE. H	B MODE Ⓗ	CTL HEAD [−]	CONTROL HEAD (−)
B.G.P	BURST GATE PULSE	CTL [+]	CONTROL HEAD (+)
BACKUP 5V	BACK UP 5V	CTL [−]	CONTROL HEAD (−)
BAND. U.E.	BAND U	CUE BIAS	CUE BIAS
BANDVL. D	BAND VL	CURRENT LIM	CURRENT LIMMITER
BI/MI [L]	BILINGUAL/MIX Ⓛ	CYL ET	CYLINDER TORQUE CONTROL

CYL GND	CYLINDER GND	FULL. E. 12V	FULL ERASE 12V
D.F.M. REC [H]	DELAIED FM RECORDING Ⓗ	GND [A]	GND (ANALOG)
D. FM REC [L]	DELAIED FM RECORDING Ⓛ	GND [TU]	GND (TUNER)
D. GND	DIGITAL GND	GND/N. SW. 12V	GND/NON SW 12V
D. REC [H]	DELAYED RECORDING Ⓗ	H. SYNC	HORIZONTAL SYNC
D4/S. LED	D4/STILL LED	H. AMP. SW	HEAD AMP SW PULSE
D4/STILLED	D4/STILL LED	H. P <R>	HEAD PHONE (R)
DAC [CLK]	TUNER DAC (CLOCK)	H. P <L>	HEAD PHONE (L)
DAC/FSCS	TUNER DAC/FS CHIP SELECT	H. P GND	HEAD PHONE GND
DAREC [H]	DELAYED AUDIO RECORDING Ⓗ	H. P OUT [L]	HEAD PHONE OUTPUT (L)
DATA	DATA	H. P OUT [R]	HEAD PHONE OUTPUT (R)
DECODER [L]	DECODER (L)	H. SW	HEAD SW PULSE
DECODER [R]	DECODER (R)	HEAD PHONE [L]	HEAD PHONE (L)
DEW	DEW	HEAD PHONE [R]	HEAD PHONE (R)
DEW SNS	DEW SENSOR	HEAD SW	HEAD SW
DFMRE [H]	DELAYED FM AUDIO RECORDING Ⓗ	HEATER [+]	HEATER (+)
E. REC 5V	EXCEPT RECORDING 5V	HEATER [−]	HEATER (−)
EC	ERROR TORQUE CONTROL	HSS	HORIZONTAL SYNC SIGNAL
ECR	ERROR TORQUE CONTROL	HTR [+]	HEATER (+)
	REFERENCE VOLTAGE	HTR [−]	HEATER (−)
EDT TRIG [L]	EDIT TRIGGER Ⓛ	I RFE	REFERENCE CURRENT
EDIT [H]	EDIT Ⓗ	ICL	CONTROL AGC CIRCUIT
EE [H]	EE Ⓗ	IF	INTERMEDIATE FREQUENCY
EE [H]/INS [M]	EE Ⓗ/INSERT Ⓜ	IN SELA1	INPUT SELECT A1 POSITION
EE. VV. TR	EE/VV/TRICK PLAY	IN SELA2	INPUT SELECT A2 POSITION
EJECT. PO	EJECT POSITION	IN SELA3	INPUT SELECT A3 POSITION
EJECT/VDET	EJECT/REVERSE SLOW LOCK	INS L/R [L]	INSERT Lch/Rch Ⓛ
ENV. SEL	ENVELOPE SELECT	INS. [H]	INSERT Ⓗ
ENVE. OUT	ENVELOPE OUTPUT	INSEL A1	INPUT SELECT A1 POSITION
ENVE. SEL	ENVELOPE SELECT	INSEL A2	INPUT SELECT A2 POSITION
ENV SELECT	ENVELOPE SELECT	INSERT	INSERT
EP [H]	LP Ⓗ	INSERT [H]	INSERT Ⓗ
EP/LP [H]	LP Ⓗ	IO CS	INPUT/OUTPUT CHIP SELECT
EP/LP/SP	LP/SP	JOG1	JOG1
EP/SS [H]	LP/SLOW/STILL/STOP Ⓗ	JOG S3 LED/FOWRD	JOG LED/FORWARD LED
EPROMCS	EPROM CHIP SELECT	JOG/F. LED	JOG LED/FORWARD LED
EX. REC 5V	EXCEPT RECORDING 5V	JSB [H]	JSB Ⓗ
FF/REW [L]	FIRST FORWARD/REWIND Ⓛ	JST. CLCK	JUST CLOCK
FG1 IN	FG1 PULSE INPUT	JST. CLK	JUST CLOCK
FG2 IN	FG2 PULSE INPUT	JST. CLOCK	JUST CLOCK
FILTER ADJUSTMENT	FILTER ADJUSTMENT	L. OUT	Lch OUTPUT
FLY ERASE [H]	FLYING ERASE HEAD ON Ⓗ	L. CH [H]	Lch Ⓗ
FLY ON [H]	FLYING ERASE HEAD ON Ⓗ	L. CH [L]	Lch Ⓛ
FLY. E [H]	FLYING ERASE HEAD ON Ⓗ	LED (MAIN)	LED (MAIN)
FM MUT [H]	FM AUDIO MUTE Ⓗ	LED (STEREO)	LED (STEREO)
FM MUTE [H]	FM AUDIO MUTE Ⓗ	LED (SUB)	LED (SUB)
FM OUT [L]	FM OUTPUT (L)	LED CKL	LED SERIAL CLOCK
FM OUT [R]	FM OUTPUT (R)	LED CKS	LED SERIAL CLOCK
FM PACK OUT [L]	FM PACK OUTPUT (L)	LED DATA	LED SERIAL DATA
FM PACK OUT [R]	FM PACK OUTPUT (R)	LINE IN 1 [L]	LINE INPUT 1 (L)
FM/BS SEL [L]	FM/BS SELECT (L)	LINE IN 1 [R]	LINE INPUT 1 (R)
FM/BS SEL [R]	FM/BS SELECT (R)	LINE IN 2 [L]	LINE INPUT 2 (L)
FS. CLK	FS CLOCK	LINE IN 2 [R]	LINE INPUT 2 (R)
FUL. E [H]	FULL ERASE HEAD ON Ⓗ	LINE IN V	LINE INPUT VIDEO
FULL. E [H]	FULL ERASE HEAD ON Ⓗ	LINE IN [L]	LINE INPUT (L)

LINE IN [R]	LINE INPUT (R)	P-OFF [H]	POWER OFF Ⓗ
LINE OUT [L]	LINE OUTPUT (L)	P-OFF [L]	POWER OFF Ⓛ
LINE OUT [R]	LINE OUTPUT (R)	P. FAIL	POWER FAILURE DETECT
LP [H]	LP Ⓗ	P. OFF [H]	POWER OFF Ⓗ
LPTRI [L]	LP TRICK PLAY Ⓛ	P. OFF [L]	POWER OFF Ⓛ
Lch/A. DUB	Lch/AUDIO DUBBING	PAL [H]	PAL Ⓗ
M GND	MOTOR GND	PAL [L]/NTSC [H]	PAL Ⓛ/NTSC Ⓗ
M REG	MOTOR REGULATOR	PB ADJ OUT	PLAYBACK ADJUST OUTPUT
MAIN OUT	MAIN OUTPUT	PB OUT	PLAYBACK OUTPUT
MAIN [L]	MAIN Ⓛ	PB. H	PLAYBACK Ⓗ
MAIN/MONO	MAIN/MONAURAL	PFG	PG/FG
MAX IN	MAXIMAM INPUT	PHOTSN +B	PHOTO SENSOR +B
MES [H]	MESECAM Ⓗ	PICT. CNT	PICTURE CONTROL
MESE [H]	MESECAM Ⓗ	PLAY LED/RVS LED	PLAY LED/REVERSE LED
MESE [L]	MESECAM Ⓛ	PLAY. PO	PLAY POSITION
METER 5V	LEVEL METER 5V	PLAY/R. LED	PLAY LED/REVERSE LED
METER [L]	LEVEL METER (L)	PLY/DEW	PLAY/DEW Ⓗ
METER [R]	LEVEL METER (R)	POWER OFF [L]	POWER OFF Ⓛ
METER. L/AVS	LEVEL METER (L)	PREROLL [H]	PREROLL Ⓗ
METER. R/AVC	LEVEL METER (R)	PWRFAIL	POWER FAILURE DETECT
MI/BI [L]	MIX Ⓗ/BILIGUAL	R. CH [H]	Rch Ⓗ
MIC GND	MIC GND	R. CH [L]	Rch Ⓛ
MIC IN	MIC INPUT	R. ST	RESET
MIC IN [L]	MIC INPUT (L)	R/S/F	REVERSE Ⓗ/STOP Ⓜ/FORWARD Ⓛ
MIC IN [R]	MIC INPUT (R)	RCH [H]	Rch Ⓗ
MIC [H]	MIC Ⓗ	REC 12V	RECORDING 12V
MIX [H]	MIX Ⓗ	REC CHROMA	RECORDING CHROMINANCE SIGNAL
MIX [H]/CINEMA [L]	MIX Ⓗ/CINEMA SOUND Ⓛ	REC H	RECORDING Ⓗ
MIX/CINE	MIX Ⓗ/CINEMA SOUND Ⓛ	REC IN	RECORDING INPUT
MIX/CINEMA [L]	MIX Ⓗ/CINEMA SOUND Ⓛ	REC OUT [L]	RECORDING OUTPUT Ⓛ
MN. H/M. L	MONAURAL Ⓗ/MAIN Ⓛ	REC START	RECORDING START
MN. H/MAI. L	MONAURAL Ⓗ/MAIN Ⓛ	REC VR [C]	RECORDING VOLUME (COMMON)
MN2/MES. L	MONAURAL 2/MESECAM Ⓛ	REC VR [L]	RECORDING VOLUME (L)
MODE SEL	AUDIO MODE SELECT	REC VR [R]	RECORDING VOLUME (R)
MODE SW	AUDIO MODE SW	REC Y	RECORDING LUMINANCE SIGNAL
MODE. S. IN	AUDIO MODE SELECT INPUT	REC [H]	RECORDING Ⓗ
MODE. S. OUT	AUDIO MODE SELECT OUTPUT	REC. C	RECORDING CHROMINANCE SIGNAL
MONO [H]	MONAURAL Ⓗ	REC. Y	RECORDING LUMINANCE SIGNAL
MONO [H]/MAIN [L]	MONAURAL Ⓗ/MAIN Ⓛ	REC/EE CTL	RECORDING/EE CONTROL
MONO2 [L]	MONAURAL 2	REEL-T	REEL PULSE (TAKE-UP)
MONO2/MESE [FM(L)]	MONAURAL 2/MESECAM (FM Ⓛ)	REEL-S	REEL PULSE (SUPPLY)
MOTOR GND	MOTOR GND	REGULATOR FILTER	REGULATOR FILTER
MUTE	MUTE	RESET	RESET
N. A. REC [L]	NORMAL AUDIO RECORDING	REV M F/R	REVIEW MOTOR FORWARD/REVERSE
N. SW 12V	NON SW 12V		
N. SW. 5. DET	NON SW 5V DETECT	REV M V1	REVIEW MOTOR V1
NICAM	NICAM	REV M V2	REVIEW MOTOR V2
NICAM [L]	NICAM Ⓛ	REV MOTOR F/R	REVIEW MOTOR FORWARD/REVERSE
NOL [H]	PAL Ⓗ/4.43 NTSC Ⓜ/3.58 NTSC Ⓛ		
NOR/SOFT [H]	NORMAL/SOFT TAPE PLAY Ⓗ	REV MOTOR V1	REVIEW MOTOR V1
NORMAL [H]	NORMAL Ⓗ	REV MOTOR V2	REVIEW MOTOR V2
NR BIAS	NR BIAS	REV MOTOR [+]	REVIEW MOTOR (+)
NTSC [L]	NTSC Ⓛ	REV MOTOR [−]	REVIEW MOTOR (−)
OCH	CONTROL AGC CIRCUIT	REV. M. GND	REVIEW MOTOR GND
OUT	OUTPUT	RF. CHROMA	RF CHROMINANCE SIGNAL

RF OUT	RF OUTPUT	SYSCON 5V	SYSTEM CONTROL 5V
RF Y	RF LUMINANCE SIGNAL	SYSTEM	SYSTEM SW
RF. Y. IN	RF LUMINANCE SIGNAL INPUT	T-PHOTO	TAKE-UP PHOTO TRANSISTOR
RF. Y. OUT	RF LUMINANCE SIGNAL OUTPUT	T-RL. PLS	TAKE-UP REEL PULSE
ROTAR. SW	ROTARY SW	T. BUSCLK	TIMER BUS CLOCK
ROTARY	ROTARY SW	T. BUSLSN	TIMER BUS LISTEN
RST	RESET	T. BUSTLK	TIMER BUS TALK
RST [L]	RESET Ⓛ	T. END [L]	TAPE END Ⓛ
Rch/INST	Rch/INSERT	T. PHOTO	TAKE-UP PHOTO TRANSISTOR
S IN	SERIAL DATA INPUT	TAPE END [L]	TAPE END Ⓛ
S OUT	SERIAL DATA OUTPUT	TAPE END [L]/CAM	TAPE END Ⓛ/CAMERA PAUSE
S-PHOTO	SUPPLY PHOTO TRANSISTOR	TEST	TEST MODE
S-RL. PLS	SUPPLY REEL PULSE	TPZ	TRAPEZOIDAL WAVE CIRCUIT
S. CLK	SERIAL CLOCK	TRIC [L]	TRIC PLAY Ⓛ
S. CLK/AV	SERIAL CLOCK/AV	TRICK [L]	TRIC PLAY Ⓛ
S. DATA	SERIAL DATA	TRK. ENV	AUTO TRACKING ENVELOPE DETECT
S. DATA/A	SERIAL DATA	TU. AUDIO	TUNER AUDIO
S. PHOTO	SUPPLY PHOTO TRANSISTOR	TU. GND	TUNER GND
S. TAB [L]	SAFETY TAB SW ON Ⓛ	TU. V. IN	TUNER VIDEO SIGNAL INPUT
S/P/N	SECAM/PAL/NTSC	TU. VIDEO	TUNER VIDEO
SC IN	SERIAL CLOCK INPUT	TUN NOR IN	TUNER NORMAL INPUT
SC OUT	SERIAL CLOCK OUTPUT	TUN R	TUNER AUDIO (R)
SCK SELECT	SERIAL CLOCK SELECT	TUN. AUDIO IN	TUNER AUDIO INPUT
SEL OUT [L]	SELECT OUTPUT (L)	TUNER 12V	TUNER 12V
SEL OUT [R]	SELECT OUTPUT (R)	TUNER L	TUNER AUDIO (L)
SHUTTLE 1	SHUTTLE 1	TUNER V IN	TUNER VIDEO SIGNAL INPUT
SIF	SOUND INTERMEDIATE FREQUENCY	TUNER [L]	TUNER AUDIO (L)
SLMUT [H]	INPUT SELECT MUTE Ⓗ	TUNER [N]	TUNER AUDIO (NORMAL)
SLNID [+]	SOLENOID (+)	TUNER [R]	TUNER AUDIO (R)
SLNID [−]	SOLENOID (−)	TUNER. 12	TUNER 12V
SLW TR. MM	SLOW TRACKING MONO MULTI	TUOFF [H]	TUNER OFF Ⓗ
SLW TR. REF	SLOW TRACKING REFERENCE VOLTAGE	TV. AUDIO	TV AUDIO
		TV/VTR	TV/VTR
SNS. GND	SENSOR GND	TXTON [L]	TEXT ON Ⓛ
SOFT [H]	SOFT TAPE PLAY Ⓗ	U. REG45V	UNREGULATOR 45V
SOFT [H]/NORMAL	SOFT TAPE PLAY Ⓗ/NORMAL Ⓗ	UNREG	UNREGULATOR
SOLENOID ON [L]	SOLENOID ON Ⓛ	UNREG19V	UNREGULATOR 19V
SP [H]	SP Ⓗ	V. REF	REFERENCE VOLTAGE
SP/L/SLP	SP/LP	V. EE [H]	VIDEO EE Ⓗ
SSS [L]	SLOW/STILL/STOP	V. EE [L]	VIDEO EE Ⓛ
STEREO LED	STEREO LED	VCO REF	REFERENCE OSCILLATER
STEREO [H]	STEREO Ⓗ	VD. IN	VIDEO SIGNAL INPUT
STEREO [L]	STEREO Ⓛ	VD. OUT	VIDEO SIGNAL OUTPUT
STOP. PO	STOP POSITION	VIDEO EE [L]	VIDEO EE Ⓛ
STOP/5V	STOP POSITION/5V	VIDEO IN	VIDEO SIGNAL INPUT
STOP1/TAPE SEL	STOP1 POSITION/TAPE SELECT	VIDEO OUT	VIDEO SIGNAL OUTPUT
STOP1/PAL:ST	STOP1 POSITION/PAL	VM	MOTOR VOLTAGE
STOP2. PO	STOP 2 POSITION	VM DOWN [L]	MOTOR VOLTAGE DOWN Ⓛ
STOP2/S-TAB	STOP 2 POSITION/SAFETY TAB SW	VSS	VERTICAL SYNC SIGNAL
STREO [H]	STEREO Ⓗ	VTR [H]	VTR Ⓗ
SUB BIAS	SUB BIAS	VTR. 12V	VTR 12V
SUB. SW	SUB SW	X IN	OSCILLATOR INPUT
SVHS CAS [L]	S-VHS CASSETTE Ⓛ	X OUT	OSCILLATOR OUTPUT
SW. 5. DET	SW 5V DETECT		
SYNC [L]	SYNC Ⓛ		

INPUT/OUTPUT CHART FOR IC6001

Pin Number	Input/Output	Port Name	Function
1	O	2H (H)	This port is high in SP mode.
2	O	FM MUTE (H)	This port is high during special playback (CUE, REV, SLOW, STILL) mode.
3	O	AUDIO MUTE (H)	This port is high during special playback (CUE, REV, SLOW, STILL) mode.
4	O	EDIT (H)	This port is high during edit.
5	O	VIDEO EE (L)	This port is low during EE mode.
6	O	VA	Input signal select.
7	O	VB	

VCR IN	VA	VB
TUNER	L	L
AV1	H	L
AV2	L	H
AV3	H	H
SAT	L	L

Pin Number	Input/Output	Port Name	Function
8	O	V. CHANGE (H)	This port is high while the loading motor torque is increased in FF and REW modes.
9	O	LM LIMIT (H)	Loading motor torque limiter output.
10	O	FF/REW (L)	This port is low during FF and REW modes.
11	O	UNLOADING (H)	This port is high while the mechanism is unloaded.
12	O	LOADING (H)	This port is high while the mechanism is loaded.
13	O	D.A. REC (H)	Normal audio recording control.
14	O	BIAS (H)	
15	O	RGB	BLANKING signal output select. RGB SW OFF: HIGH RGB SW ON : LOW
16	I	SHORT CHECK (H)	DC voltage (BIAS (H)) detection. ● When the low voltage is detected in recording mode, the VCR is turned off. ● When the high voltage is detected in except recording mode, the VCR is turned off.
17	I	S-VHS PB (H)	This port is high during S-VHS playback.
18	O	PB AI2 (H)	AI playback control.
19	O	PB AI1 (H)	AI playback control.

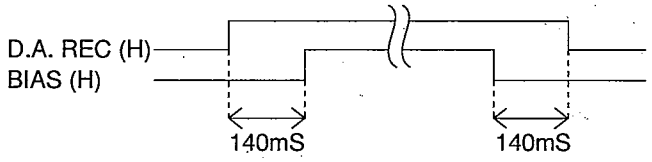

Fig. MP1

Pin Number	Input/Output	Port Name	Function
20	I	S-TAB (L)	This port is low while the cassette tape with safety tab is inserted.
21	I	ABS NORM IN	HIFI audio mode detection. ● When the low voltage is detected, the audio output is compulsory normal audio mode.
22	I	NC	Not used (Low setting)
23	I	CPB	AV2 PB (H) setting detection for I/O circuit control. ● This port is high when AV2 PB (H) is set to high. ● This port is low when AV2 PB (H) is set to low.
24	I	REC AI (L)	AI mode selection. AI PB ONLY : HIGH AI PB AND REC : LOW
25	I	RESET (L)	This port is low while IC6001 is reset.
26	I	MODE SEL	Active mode selection for microprocessor.
27	I	NC	Not used (Low setting)
28	I	B	Initial setting for 21 PIN Skirt Jack. B MODEL : HIGH EXCEPT B MODEL: LOW
29	O	LINE (L)	Input signal control for HIFI audio circuit. MIC/TUNER: HIGH LINE : LOW
30	O	REC (L)	DC voltage control for recording mode. REC (L) REC (H) 100mS 100mS
31	O	REC (H)	
32	O	A. DUB (H)	This port is high during audio dubbing mode.
33	O	SAT (H)	This port is high during VCR receive the SAT signal.
34	O	TV	Output signal control for AV1. SIGNAL FROM VCR: HIGH SIGNAL FROM AV2 : LOW
35	O	SYSTEM 4	Refer to Fig. MP. 7
36	O	SYSTEM 5	Refer to Fig. MP. 7
37	I	DIGITAL 5V	VDD
38	O	12MHz OUT	Oscillator output.
39	I	12MHz IN	Oscillator input.

Fig. MP2

Pin Number	Input/Output	Port Name	Function
40	O	32KHz OUT	Oscillator output.
41	I	32KHz IN	Oscillator input.
42	I	DIGITAL GND	GND
43	O	FULL ERASE (H)	Full erase on/off control. ON : HIGH OFF: LOW
44	O	D. REC (H)	Video signal recording on/off control.
45	O	D. FM. REC (H)	HIFI audio signal recording on/off control.
46	O	C. EMPHASYS (H)	This port supplies high signal during a certain time (refer to following chart) from starting the recording to control the HIFI audio recording current. TAPE SPEED / OUTPUT NTSC 2H / 6 sec NTSC 4H / 12 sec NTSC 6H / 18 sec PAL 3H / 9 sec PAL 6H / 18 sec
47	O	REC CUR 1	AI REC current switching signal output.
48	O	REC CUR 2	
49	O	REC CUR 3	
50	O	A. H. SW	HIFI audio head switching signal output.
51	O	S. DATA OUT	Serial data output.
52	I	S. DATA IN	Serial data input.
53	O	S. CLOCK	Serial clock output.
54	O	5P S. DATA OUT	EDIT 5P serial data output.
55	I	5P S. DATA IN	EDIT 5P serial data input.
56	O	5P S. CLOCK	EDIT 5P serial clock output.
57	O	CAP R/S/F	Capstan rotation direction control. REVERSE: HIGH STOP : MIDDLE FOWARD : LOW
58	O	CURRENT LIMIT	Capstan motor current limitter output.
59	O	ENV2	AI PB control signal output.

Fig. MP3

<table>
<tr><th>Pin Number</th><th>Input/Output</th><th>Port Name</th><th>Function</th></tr>
<tr><td>60</td><td>O</td><td>PIC VR OUT</td><td>This port supplies the voltage which depends on picture VR setting.</td></tr>
<tr><td>61</td><td>O</td><td>ART V/H/N</td><td>This port supplies artificial vertical sync signal to stabilize the picture in special playback mode.</td></tr>
<tr><td>62</td><td>O</td><td>VIDEO H. SW</td><td>Video head switching signal output.</td></tr>
<tr><td>63</td><td>O</td><td>ROTARY SW</td><td>Rotary switching signal output.</td></tr>
<tr><td>64</td><td>O</td><td>H. AMP. SW</td><td>Head amp switching signal output.</td></tr>
<tr><td>65</td><td>I</td><td>ENVE SELECT</td><td>This port receives the playback envelope signal level to select the video head in special playback mode.</td></tr>
<tr><td>66</td><td>I</td><td>MIC (H)</td><td>This port is high during the mic is connected.</td></tr>
<tr><td>94</td><td>I</td><td>T- PHOTO</td><td>This port receives the signal when take-up photo sensor detects the tape begining.</td></tr>
<tr><td>95</td><td>I</td><td>S-PHOTO</td><td>This port receives the signal when supply photo sensor detects the tape end.</td></tr>
<tr><td>96</td><td>I</td><td>NORMAL/ SERVICE/TEST</td><td>NORMAL/SERVICE/TEST mode selection.
<table>
<tr><th>INPUT VOLTAGE</th><th>MODE</th></tr>
<tr><td>MORE THAN 4.0V</td><td>NORMAL</td></tr>
<tr><td>2.5V~4.0V</td><td>SERVICE</td></tr>
<tr><td>LESS THAN 2.5V</td><td>TEST</td></tr>
</table></td></tr>
<tr><td>97</td><td>I</td><td>SYSTEM SELECT</td><td>System mode selection for auto setup.
<table>
<tr><th>INPUT VOLTAGE</th><th>MODE</th></tr>
<tr><td>MORE THAN 3.0V</td><td>MODE 4</td></tr>
<tr><td>2.0V~3.0V</td><td>MODE 2</td></tr>
<tr><td>LESS THAN 2.0V</td><td>MODE 1</td></tr>
</table></td></tr>
<tr><td>98</td><td>I</td><td>STEREO/BIL</td><td>Audio mode detection for display on the OSD.
<table>
<tr><th>INPUT VOLTAGE</th><th>DISPLAY</th></tr>
<tr><td>MORE THAN 4.2V</td><td>NO DISPLAY</td></tr>
<tr><td>3.0V~4.2V</td><td>MONO 1</td></tr>
<tr><td>2.0V~3.0V</td><td>BILINGUAL</td></tr>
<tr><td>0.8V~2.0V</td><td>MONO 1+2</td></tr>
<tr><td>LESS THAN 0.8V</td><td>STEREO</td></tr>
</table></td></tr>
<tr><td>99</td><td>I</td><td>DEW SNS</td><td>This port is more than 1.36V during detecting the dew formation.</td></tr>
<tr><td>100</td><td>I</td><td>ATIC SEL</td><td>Head amp IC setting for playback envelope detection.
<table>
<tr><th>INPUT VOLTAGE</th><th>IC</th></tr>
<tr><td>MORE THAN 3.0V</td><td>TEA5705</td></tr>
<tr><td>2.0V~3.0V</td><td>AN3336</td></tr>
<tr><td>LESS THAN 2.0V</td><td>AN3360</td></tr>
</table></td></tr>
<tr><td>101</td><td>I</td><td>PIC VR IN</td><td>This port receives the voltage which depends on picture VR setting.</td></tr>
<tr><td>102</td><td>I</td><td>CHROMA IN</td><td>AI PB Chrominance level adjustment input.</td></tr>
</table>

Fig. MP4

<table>
<tr><th>Pin Number</th><th>Input/Output</th><th>Port Name</th><th>Function</th></tr>
<tr><td>103</td><td>I</td><td>SLTR MM</td><td>Slowtracking adjustment input.</td></tr>
<tr><td>104</td><td>I</td><td>AV MODE SEL</td><td>TV/VTR switch setting.
<table>
<tr><th>INPUT VOLTAGE</th><th>SWITCH</th></tr>
<tr><td>MORE THAN 3.0V</td><td>TV/VTR</td></tr>
<tr><td>2.0V~3.0V</td><td>NO SW</td></tr>
<tr><td>LESS THAN 2.0V</td><td>AV LINK</td></tr>
</table></td></tr>
<tr><td>105</td><td>I</td><td>TRACKING ENVE</td><td>Playback envelope input for tracking adjustment.</td></tr>
<tr><td>106</td><td>I/O</td><td>EDIT TRIG</td><td>Trigger signal in/output for synchronized editing.</td></tr>
<tr><td>107</td><td>I/O</td><td>PB/TUN/LINE</td><td>Normal audio switching control.
NORMAL AUDIO PB (INCLUDING INSERT): HIGH
LINE IN EE OR A. DUB MODE : LOW
TUNER IN EE OR A. DUB MODE : Z</td></tr>
<tr><td>108</td><td>O</td><td>T SNS LED (L)</td><td>Sensor LED drive signal output.
• When this port supplies the low signal, the sensor LED is lit.</td></tr>
<tr><td>109</td><td>I/O</td><td>PREROLL</td><td>Preroll signal in/output for synchronized editing.</td></tr>
<tr><td>110</td><td>O</td><td>SYSTEM 2</td><td>Refer to Fig. MP. 7</td></tr>
<tr><td>111</td><td>O</td><td>SYSTEM 1</td><td>Refer to Fig. MP. 7</td></tr>
<tr><td>112</td><td>I/O</td><td>HIFI/MIX/NORM</td><td rowspan="2">Audio output mode control.
<table>
<tr><th></th><th colspan="4">MODE</th></tr>
<tr><th></th><th>STEREO</th><th>L CH</th><th>R CH</th><th>NORMAL</th></tr>
<tr><td>HIFI/MIX/NORM</td><td>H</td><td>H</td><td>H</td><td>L</td></tr>
<tr><td>L CH/R CH/STEREO</td><td>L</td><td>H</td><td>Z</td><td>L</td></tr>
</table>
Z: HIGH IMPEDANCE</td></tr>
<tr><td>113</td><td>O</td><td>L CH/R CH/
STEREO</td></tr>
<tr><td>114</td><td>I</td><td>DIGITAL 5V</td><td>VDD</td></tr>
<tr><td>115</td><td>I</td><td>POSITION SW1</td><td rowspan="3">
<table>
<tr><th>P. SW 3</th><th>P. SW 2</th><th>P. SW 1</th><th>Position (Mode) Name</th></tr>
<tr><td>O</td><td>O</td><td>O</td><td>EJECT</td></tr>
<tr><td>O</td><td>O</td><td>I</td><td>CASSETTE DOWN</td></tr>
<tr><td>O</td><td>I</td><td>O</td><td>REV, REV SLOW</td></tr>
<tr><td>O</td><td>I</td><td>I</td><td>MID (LOADING/UNLOADING)</td></tr>
<tr><td>I</td><td>O</td><td>O</td><td>PLAY/REC, STILL/PAUSE, CUE, FWD SLOW STOP3 *1</td></tr>
<tr><td>I</td><td>O</td><td>I</td><td>STOP</td></tr>
<tr><td>I</td><td>I</td><td>O</td><td>FF/REW</td></tr>
<tr><td>I</td><td>I</td><td>I</td><td>INTERMEDIATE</td></tr>
</table>
(*1) The Pinch Roller is on the capstan motor shaft.</td></tr>
<tr><td>116</td><td>I</td><td>POSITION SW2</td></tr>
<tr><td>117</td><td>I</td><td>POSITION SW3</td></tr>
<tr><td>118</td><td>O</td><td>AVPBL</td><td>AV1 PB (H) output control.
• This port is high when AV1 PB (H) is set to high.
• This port is low when AV1 PB (H) is set to low.</td></tr>
<tr><td>119</td><td>I</td><td>GND</td><td>GND</td></tr>
<tr><td>120</td><td>O</td><td>DEA</td><td rowspan="2">AV2 output control.
<table>
<tr><th>AV2 OUTPUT</th><th>DEA</th><th>DEB</th></tr>
<tr><td>TUNER</td><td>H</td><td>L</td></tr>
<tr><td>AV1</td><td>L</td><td>L</td></tr>
<tr><td>SAT</td><td>L</td><td>H</td></tr>
<tr><td>VCR OUT</td><td>H</td><td>H</td></tr>
</table></td></tr>
<tr><td>121</td><td>O</td><td>DEB</td></tr>
</table>

Fig. MP5

Pin Number	Input/Output	Port Name	Function
122	O	AI MES (H)	This port is high when measuring the head and tape condition to determine the optimum recording current before starting the AI recording.
123	O	POWER OFF (H)	Power on/off control.
124	O	TRICK (L)	This port is low during special playback (CUE, REV, SLOW, STILL) mode.

Fig. MP6

	MODE 1	MODE 2	MODE 3	MODE 4
PIN 111 (SYSTEM 1)	H: MESECAM L: PAL Z: AUTO	H: MESECAM L: PAL	H: PAL L: NTSC Z: AUTO	H: MESECAM L: PAL Z: AUTO
PIN 110 (SYSTEM 2)	H: EXCEPT NTSC L: NTSC-M	H: SECAM L: PAL Z: AUTO	——	H: EXCEPT NTSC L: NTSC-M
PIN 35 (SYSTEM 4)	H: PAL- I L: B/G/D/K	H: SECAM L: PAL	——	H: PAL-I L: B/G/D/K
PIN 36 (SYSTEM 5)	H: PAL L: NTSC	H: PAL L: NTSC	H: 50Hz L: 60Hz	H: PAL L: NTSC

Z: HIGH IMPEDANCE

Fig. MP7

Note: 1. The mode is decided depend on SYSTEM SELECT PORT (PIN 97).

INPUT/OUTPUT CHART FOR IC7503

Pin Number	Input/Output	Port Name	Function
1	O	L CH (L)	FIP level meter Lch (L)
2	I	AFC (S)	AFC S-CURVE
3	O	DEL (L)	AV2 connector detection DECODER: LOW EXT : HIGH
4	O	L CTL	LANK clock control
5	I	JOG1	JOG1
6	O	IC CLK	Tuner IC control clock
7	I	IR	Remote controller data
8	I	L CLK	LANK clock
9	O	FS CS (H)	FS chip select (H)
10	I	JOG2	JOG2
11	O	SAT IR	SAT IR output
12	I	POW FAIL (L)	Power fail detection
13	I	RESET (L)	Reset (L)
14	I	S CLK	Serial clock
15	I	S DATA IN	Serial data input
16	O	S DATA OUT	Serial data input
17	O	T CLK	Timer bus clock output
18	I	T LSN	Timer data input (from OSD)
19	O	T TLK	Timer data output (to OSD)
20	O	128Hz	128Hz
21	I	NC	Not used
22	O	STAND BY (L)	Stand by (L)
23	O	NC	Not used
24	O	FIP (L)	FIP heater on (L)
25 26 27 28 29	I	KEY SCAN	Key scan input
30	O	AUDIO DEF (H)	Audio defeat high output
31	O	R CH (L)	FIP level meter Rch (L)

Fig. MP8

Pin Number	Input/Output	Port Name	Function
32	O	P17	DGT1
33	O	P16	DGT2
34	O	P15	DGT3
35	O	P14	DGT4
36	O	P13	DGT5
37	O	P12	DGT6
38	O	P11	DGT7
39	O	P10	DGT8
40	O	P07	DGT9/Key scan output
41	O	P06	DGT10/Key scan output
42	O	P05	SEG J/Key scan output
43	O	P04	SEG I/Key scan output
44	O	P03	SEG H/Key scan output
45	O	P02	SEG D/Key scan output
46	O	P01	SEG E/Key scan output
47	O	P00	SEG C/Key scan output
48	O	P37	SEG G/Key scan output
49	O	P36	SEG F/Key scan output
50	O	P35	SEG B/Key scan output
51	O	P34	SEG A/Key scan output
52	O	AI ON (H)	AI on (H) output
53	O	OSD ON (H)	OSD on (H) output
54	O	METER OFF (H)	Level meter off (H) output
55	O	MONO (H)	Forced MONO (NICAM off) (H) output
56	—	VEE	−29V
57	—	VCC	+5V
58	O	XOUT	8.39MHz clock output
59	I	XIN	8.39MHz clock input
60	—	VSS	GND
61	I	XCIN	32KHz clock input
62	O	XCOUT	32KHz clock output
63	O	SIMUL (H)/SI (H)	Simul (H) output
64	O	SELECT MUTE (H)	Audio select mute (H) output

Fig. MP9

SYSTEM CHART FOR NICAM DECODER

TV SYSTEM SELECT

IC7305		TV SYSTEM	SOUND MODULATION
SW1	SW2		
L	L	B/G	FM-MONO/NICAM GERMAN MULTIPLEX
H	L	I	FM-MONO/NICAM
*	H	M	FM-MONO

*: DO NOT CARE

FM-MONO MODE SELECT

IC7305	FM-MONO MODE	FM-MONO SOURCE
SW3		
L	INT	SIF (IF INPUT1, IF INPUT2)
H	EXT	AUDIO MULTI (MONO IN)

SIF INPUT SELECT

IC7305	SIF INPUT
SW4	
L	IF INPUT 1
H	IF INPUT 2

AUDIO OUTPUT SELECT

INPUT TV SYSTEM	SOUND MODULATION	FM-MONO MODE	MAIN OUTPUT		SUB OUTPUT	
			INPUT SOURCE	MATRIX	INPUT SOURCE	MATRIX
B/G	MONO	INT	IF INPUT 1/2 (FM)	MONAURAL	IF INPUT 1/2 (FM)	MONAURAL
		EXT	MONO IN	MONAURAL	MONO IN	MONAURAL
	NICAM STEREO	INT	IF INPUT 1/2 (NICAM)	STEREO	IF INPUT 1/2 (FM)	MONAURAL
		EXT	IF INPUT 1/2 (NICAM)	STEREO	MONO IN	MONAURAL
	NICAM M1/DATA	INT	IF INPUT 1/2 (NICAM)	MONAURAL	IF INPUT 1/2 (FM)	MONAURAL
		EXT	IF INPUT 1/2 (NICAM)	MONAURAL	MONO IN	MONAURAL
	NICAM M1/M2	INT	IF INPUT 1/2 (NICAM)	STEREO	IF INPUT 1/2 (FM)	MONAURAL
		EXT	IF INPUT 1/2 (NICAM)	STEREO	MONO IN	MONAURAL
	NICAM DATA	INT	IF INPUT 1/2 (FM)	MONAURAL	IF INPUT 1/2 (FM)	MONAURAL
		EXT	MONO IN	MONAURAL	MONO IN	MONAURAL
	STEREO	INT	IF INPUT 1/2 (FM)	STEREO	IF INPUT 1/2 (FM)	MONAURAL
	BILINGUAL	INT	IF INPUT 1/2 (FM)	STEREO	IF INPUT 1/2 (FM)	MONAURAL
I	MONO	INT	IF INPUT 1/2 (FM)	MONAURAL	IF INPUT 1/2 (FM)	MONAURAL
		EXT	MONO IN	MONAURAL	MONO IN	MONAURAL
	NICAM STEREO	INT	IF INPUT 1/2 (NICAM)	STEREO	IF INPUT 1/2 (FM)	MONAURAL
		EXT	IF INPUT 1/2 (NICAM)	STEREO	MONO IN	MONAURAL
	NICAM M1/DATA	INT	IF INPUT 1/2 (NICAM)	MONAURAL	IF INPUT 1/2 (FM)	MONAURAL
		EXT	IF INPUT 1/2 (NICAM)	MONAURAL	MONO IN	MONAURAL
	NICAM M1/M2	INT	IF INPUT 1/2 (NICAM)	STEREO	IF INPUT 1/2 (FM)	MONAURAL
		EXT	IF INPUT 1/2 (NICAM)	STEREO	MONO IN	MONAURAL
	NICAM DATA	INT	IF IMPUT 1/2 (FM)	MONAURAL	IF INPUT 1/2 (FM)	MONAURAL
		EXT	MONO IN	MONAURAL	MONO IN	MONAURAL
M	MONO	INT	IFINPUT 1/2 (FM)	MONAURAL	IF INPUT 1/2 (FM)	MONAURAL

Note: When the IC7305-15 (F MONO) is high, both the MAIN OUTPUT and the SUB OUTPUT apply the FM-MONO audio.

3-2. TIMER BLOCK DIAGRAM

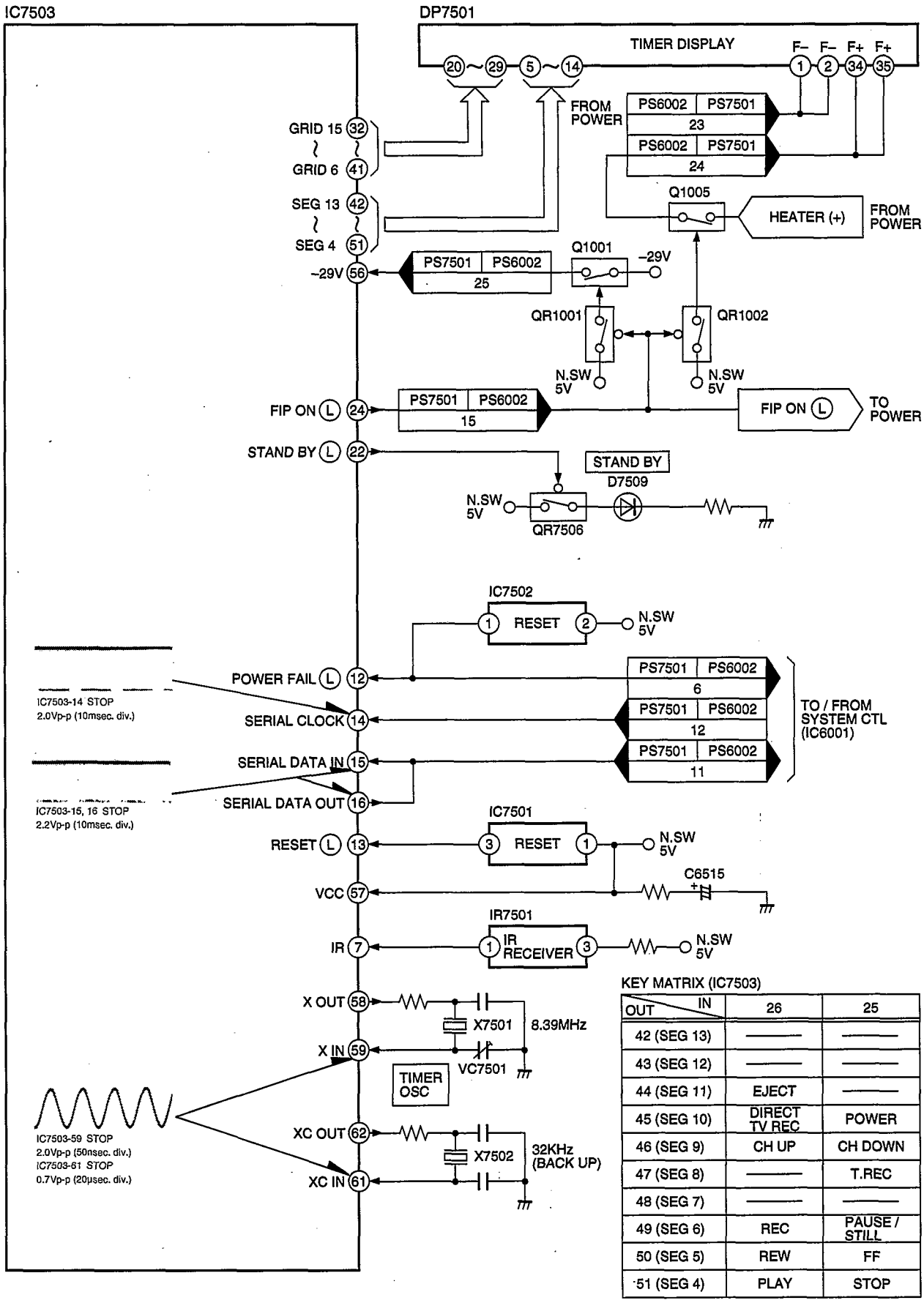

KEY MATRIX (IC7503)

OUT \ IN	26	25
42 (SEG 13)	———	———
43 (SEG 12)	———	———
44 (SEG 11)	EJECT	———
45 (SEG 10)	DIRECT TV REC	POWER
46 (SEG 9)	CH UP	CH DOWN
47 (SEG 8)	———	T.REC
48 (SEG 7)	———	———
49 (SEG 6)	REC	PAUSE / STILL
50 (SEG 5)	REW	FF
51 (SEG 4)	PLAY	STOP

3-3. SYSTEM CONTROL & SERVO BLOCK DIAGRAM

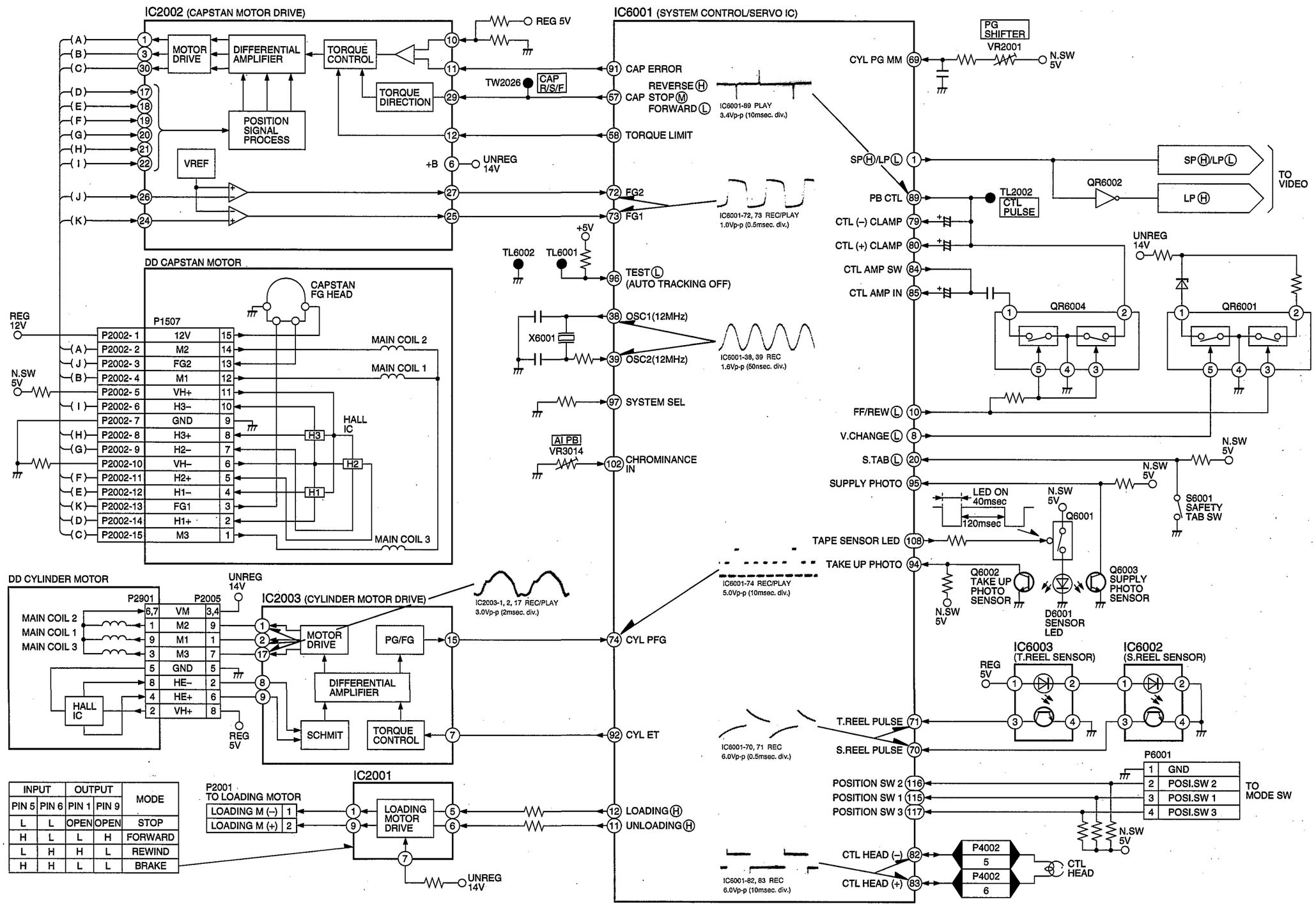

INPUT		OUTPUT		MODE
PIN 5	PIN 6	PIN 1	PIN 9	
L	L	OPEN	OPEN	STOP
H	L	L	H	FORWARD
L	H	H	L	REWIND
H	H	L	L	BRAKE

3-4. LUMINANCE & CHROMINANCE BLOCK DIAGRAM

MAIN SIGNAL PATH IN REC MODE ⇦ MAIN SIGNAL PATH IN PLAYBACK MODE

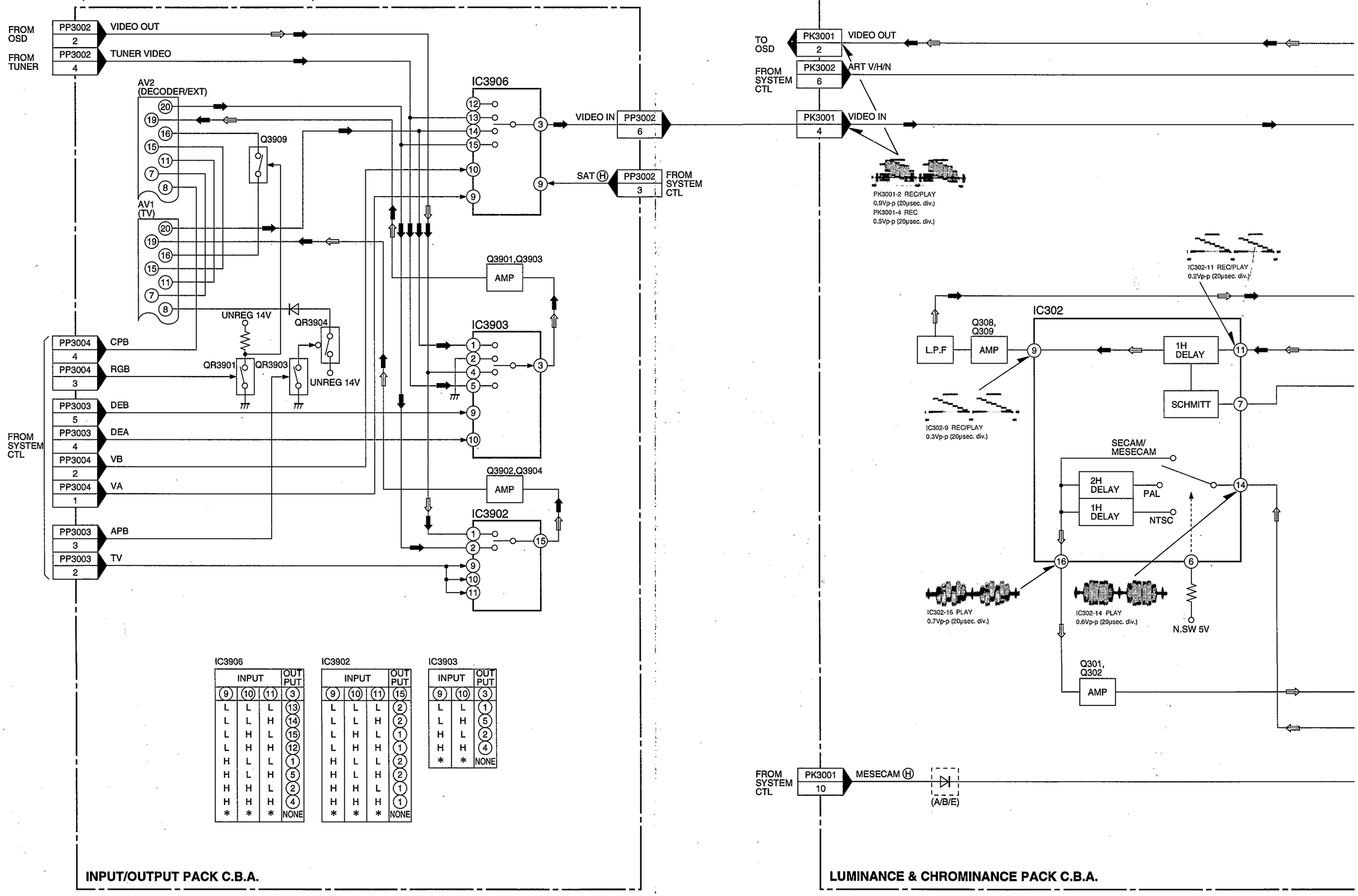

IC3906

INPUT (9)	INPUT (10)	INPUT (11)	OUTPUT (3)
L	L	L	13
L	L	H	14
L	H	L	15
L	H	H	12
H	L	L	1
H	L	H	5
H	H	L	2
H	H	H	4
*	*	*	NONE

IC3902

INPUT (9)	INPUT (10)	INPUT (11)	OUTPUT (15)
L	L	L	2
L	L	H	2
L	H	L	1
L	H	H	1
H	L	L	2
H	L	H	2
H	H	L	1
H	H	H	1
*	*	*	NONE

IC3903

INPUT (9)	INPUT (10)	OUTPUT (3)
L	L	1
L	H	5
H	L	2
H	H	4
*	*	NONE

INPUT/OUTPUT PACK C.B.A.

LUMINANCE & CHROMINANCE PACK C.B.A.

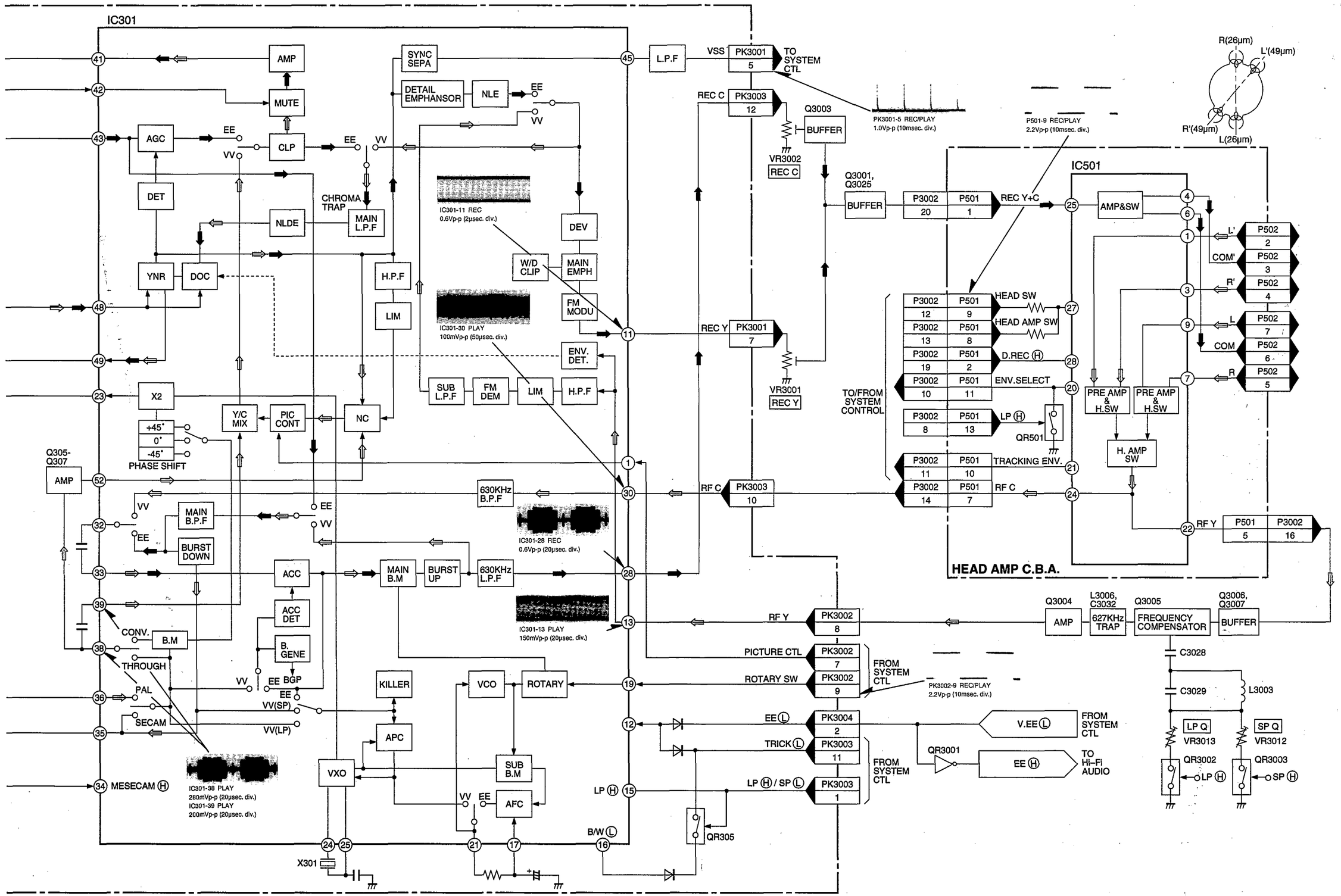
IC301
AMP
MUTE
AGC
CLP
DET
NLDE
MAIN L.P.F
CHROMA TRAP
YNR
DOC
X2
+45°
0°
-45°
PHASE SHIFT
Y/C MIX
PIC CONT
NC
Q305-Q307
AMP
MAIN B.P.F
BURST DOWN
ACC
ACC DET
B.M
B. GENE
CONV.
THROUGH
PAL
SECAM
MESECAM Ⓗ
KILLER
APC
VXO
X301
SYNC SEPA
DETAIL EMPHANSOR
NLE
DEV
W/D CLIP
MAIN EMPH
FM MODU
ENV. DET.
H.P.F
LIM
SUB L.P.F
FM DEM
630KHz B.P.F
MAIN B.M
BURST UP
630KHz L.P.F
VCO
ROTARY
SUB B.M
AFC
L.P.F
IC301-11 REC
0.6Vp-p (2μsec. div.)
IC301-30 PLAY
100mVp-p (50μsec. div.)
IC301-28 REC
0.6Vp-p (20μsec. div.)
IC301-13 PLAY
150mVp-p (20μsec. div.)
IC301-38 PLAY
280mVp-p (20μsec. div.)
IC301-39 PLAY
200mVp-p (20μsec. div.)
VSS
PK3001 5
TO SYSTEM CTL
REC C
PK3003 12
Q3003
BUFFER
VR3002
REC C
REC Y
PK3001 7
VR3001
REC Y
RF C
PK3003 10
RF Y
PK3002 8
PICTURE CTL
PK3002 7
ROTARY SW
PK3002 9
FROM SYSTEM CTL
EE Ⓛ
PK3004 2
TRICK Ⓛ
PK3003 11
LP Ⓗ / SP Ⓛ
PK3003 1
LP Ⓗ
B/W Ⓛ
QR305
PK3001-5 REC/PLAY
1.0Vp-p (10msec. div.)
P501-9 REC/PLAY
2.2Vp-p (10msec. div.)
PK3002-9 REC/PLAY
2.2Vp-p (10msec. div.)
R(26μm)
L'(49μm)
R'(49μm)
L(26μm)
IC501
Q3001, Q3025
BUFFER
P3002 20
P501 1
REC Y+C
AMP&SW
HEAD SW
HEAD AMP SW
D.REC Ⓗ
ENV.SELECT
LP Ⓗ
QR501
TRACKING ENV.
RF C
TO/FROM SYSTEM CONTROL
PRE AMP & H.SW
H. AMP SW
RF Y
P501 5
P3002 16
HEAD AMP C.B.A.
L'
COM'
R'
L
COM
R
P502 2
P502 3
P502 4
P502 7
P502 6
P502 5
Q3004
AMP
L3006, C3032
627KHz TRAP
Q3005
FREQUENCY COMPENSATOR
Q3006, Q3007
BUFFER
C3028
C3029
L3003
LP Q
SP Q
VR3013
VR3012
QR3002
QR3003
LP Ⓗ
SP Ⓗ
V.EE Ⓛ
QR3001
EE Ⓗ
TO HI-FI AUDIO

3-5. Hi-Fi AUDIO BLOCK DIAGRAM

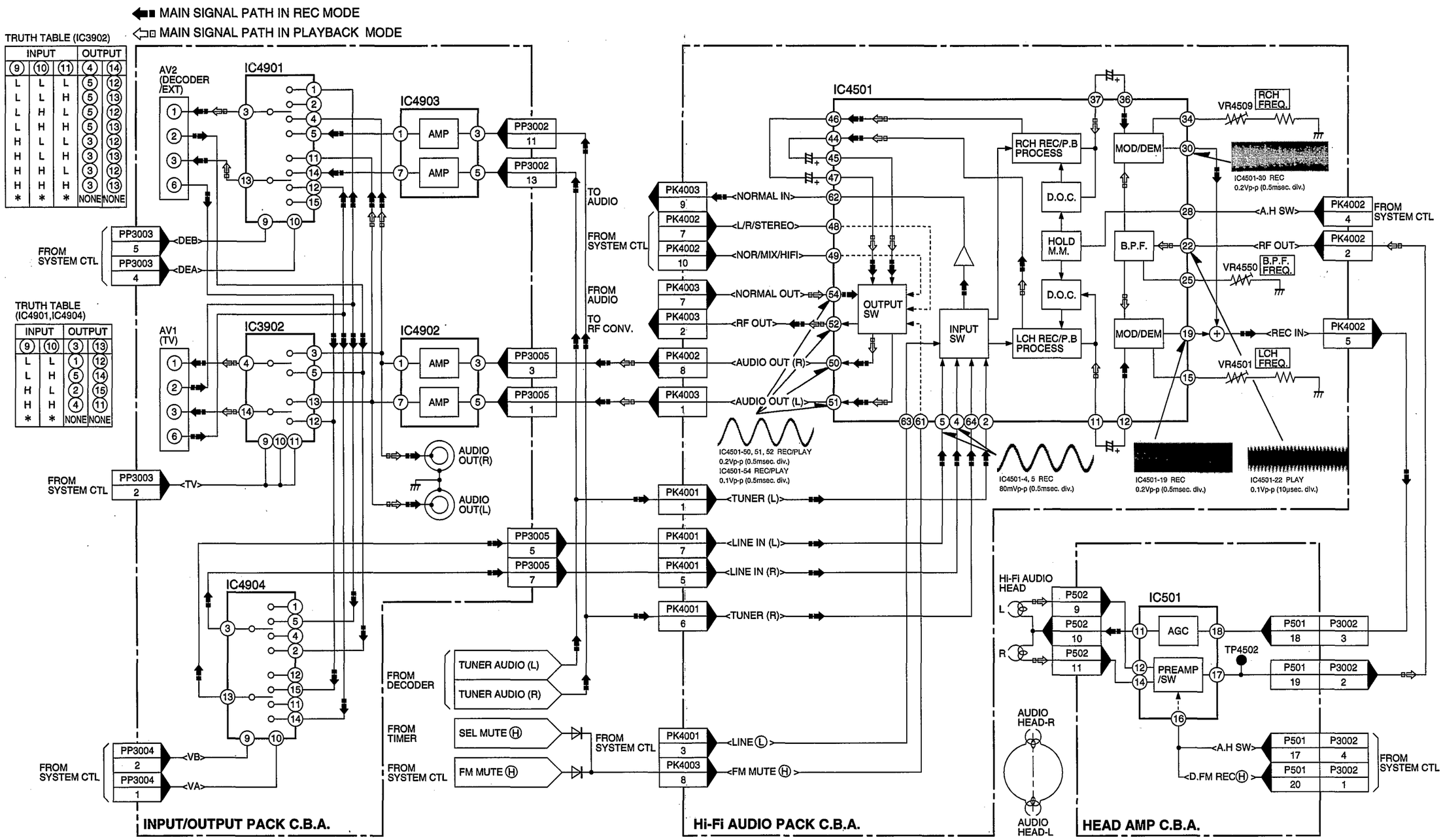

3-6. POWER SCHEMATIC DIAGRAM

CAUTION THE RED MARK INDICATES THE PRIMARY CIRCUIT TO DISTINGUISH THE PRIMARY FROM THE SECONDARY CIRCUIT.
PAY ATTENTION NOT TO RECEIVE AN ELECTRIC SHOCK DURING REPAIR AND SERVICE OF THE PRODUCTS.

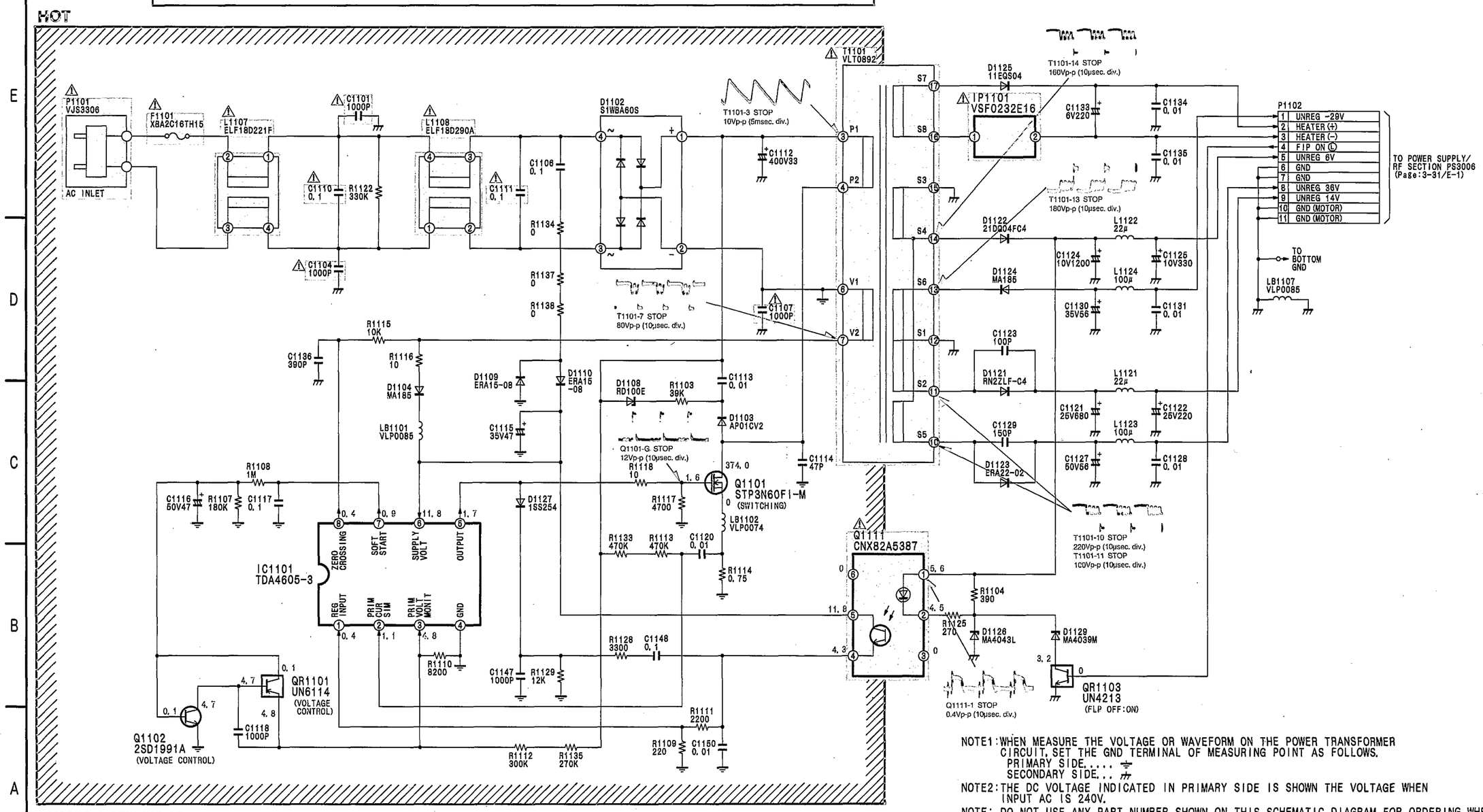

IMPORTANT SAFETY NOTICE:
COMPONENTS IDENTIFIED WITH THE MARK ⚠ HAVE THE SPECIAL CHARACTERISTICS FOR SAFETY.
WHEN REPLACING ANY OF THESE COMPONENTS, USE ONLY THE SAME TYPE.

NOTE1: WHEN MEASURE THE VOLTAGE OR WAVEFORM ON THE POWER TRANSFORMER CIRCUIT, SET THE GND TERMINAL OF MEASURING POINT AS FOLLOWS.
PRIMARY SIDE.... ⏚
SECONDARY SIDE... ⏚

NOTE2: THE DC VOLTAGE INDICATED IN PRIMARY SIDE IS SHOWN THE VOLTAGE WHEN INPUT AC IS 240V.

NOTE: DO NOT USE ANY PART NUMBER SHOWN ON THIS SCHEMATIC DIAGRAM FOR ORDERING. WHEN YOU ORDER A PART, PLEASE REFER TO PARTS LIST.

NOTE: THE MEASURMENT MODE OF THE DC VOLTAGE ON THIS DIAGRAM IS STOP MODE.

3-7. SYSTEM CONTROL & SERVO SECTION IN MAIN SCHEMATIC DIAGRAM

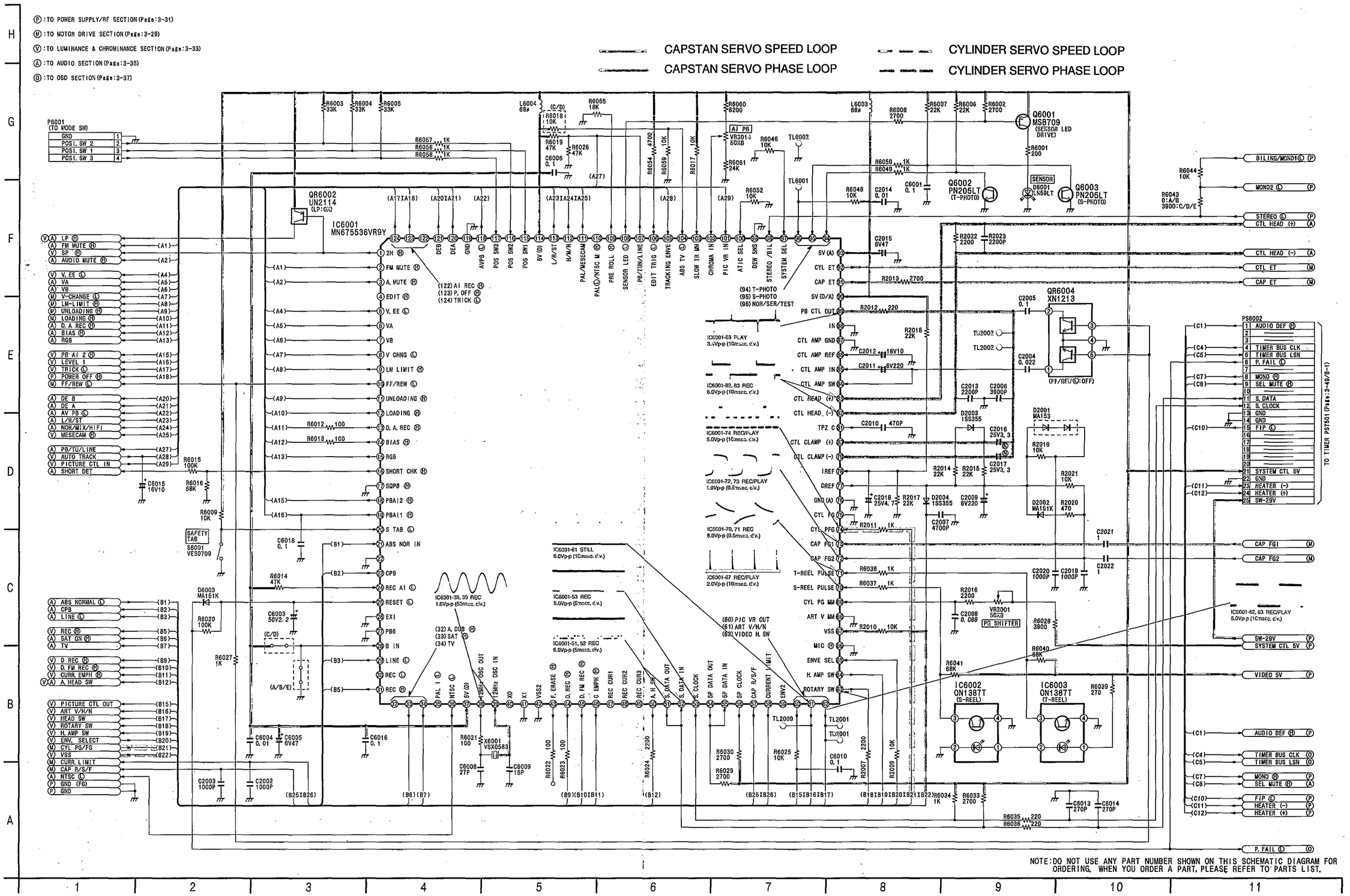

SYSTEM CONTROL & SERVO ICs DC VOLTAGE CHART (SP MODE)

REF. NO.	IC6001																			
MODE	1	2	3	4	5	6	7	8	9	10	11	12	13	14	15	16	17	18	19	20
STOP	4.8	0	0	0	0.1	4.9	0	4.8	0	4.8	0	0	0	0	4.8	0	0	0	0	0
PLAY	4.8	0	0	0	4.8	4.9	0	4.8	0	4.8	0	0	0	0	4.8	0	0	0	0	0
REC	4.8	0	0	0	0.1	4.9	0	4.8	0	4.8	0	0	4.8	4.8	4.8	4.4	0	0	0	0
F.F	4.8	0	0	0	0.1	4.9	0	0	0	0	0	0	0	0	4.8	0	0	0	0	0
REW	4.8	0	0	0	0.1	4.9	0	0	0	0	0	0	0	0	4.8	0	0	0	0	0

REF. NO.	IC6001																			
MODE	21	22	23	24	25	26	27	28	29	30	31	32	33	34	35	36	37	38	39	40
STOP	–0.1	0	0	4.8	4.9	0	0	0	0	4.9	0.1	0	0	4.9	4.9	4.8	4.9	2.6	2.6	4.5
PLAY	0.2	0	0	4.8	4.8	0	0	0	0	4.8	0.1	0	0	4.9	4.9	4.8	4.9	2.6	2.6	4.5
REC	0	0	0	4.8	4.8	0	0	0	0	0	4.8	0	0	4.9	4.9	4.8	4.9	2.6	2.6	4.5
F.F	–0.1	0	0	4.8	4.9	0	0	0	0	4.8	0.1	0	0	4.9	4.9	4.8	4.9	2.6	2.6	4.5
REW	–0.1	0	0	4.8	4.9	0	0	0	0	4.8	0.1	0	0	4.9	4.9	4.9	4.9	2.6	2.6	4.5

REF. NO.	IC6001																			
MODE	41	42	43	44	45	46	47	48	49	50	51	52	53	54	55	56	57	58	59	60
STOP	0	0	0	0	0	0	4.9	4.9	0	0	4.6	4.6	4.4	4.8	4.8	4.8	2.0	0	4.9	2.5
PLAY	0	0	0	0	0	0	4.9	4.9	0	2.3	4.6	4.6	4.4	4.8	4.8	4.8	0	4.8	4.9	2.5
REC	0	0	4.8	4.8	4.8	0	4.9	4.9	0	0	4.6	4.6	4.4	4.8	4.8	4.8	0	4.8	4.9	2.5
F.F	0	0	0	0	0	0	4.9	4.9	0	0	4.6	4.6	4.4	4.8	4.8	4.8	0	4.8	4.9	2.5
REW	0	0	0	0	0	0	4.9	4.9	0	0	4.6	4.6	4.4	4.8	4.8	4.8	4.9	4.8	4.9	2.5

REF. NO.	IC6001																			
MODE	61	62	63	64	65	66	67	68	69	70	71	72	73	74	75	76	77	78	79	80
STOP	0	0	0	0	0	0	2.4	0	4.9	0	0	2.4	2.4	4.9	0	0	2.4	2.4	2.3	2.5
PLAY	0	2.4	2.4	0	2.0	0	2.4	0	3.0	5.0	4.6	2.4	2.4	1.0	0	0	2.4	2.4	2.5	2.5
REC	0	2.4	2.4	0	4.8	0	2.4	0	3.0	5.0	4.6	2.4	2.4	1.1	0	0	2.4	2.4	2.3	2.5
F.F	0	2.4	0	0	2.8	0	2.4	0	3.0	2.2	2.2	2.3	2.4	1.1	0	0	2.4	2.4	2.7	2.2
REW	0	2.4	0	0	2.8	0	2.4	0	3.0	2.2	2.2	2.3	2.4	1.1	0	0	2.4	2.4	2.7	2.2

REF. NO.	IC6001																			
MODE	81	82	83	84	85	86	87	88	89	90	91	92	93	94	95	96	97	98	99	100
STOP	4.8	0	0	0	2.4	2.4	0	0	2.4	4.9	1.3	4.6	4.9	4.5	4.8	4.9	0	5.2	0	0
PLAY	4.8	0	0	0	2.4	2.4	0	0	2.4	4.9	2.5	2.3	4.9	4.5	4.8	4.9	0	5.2	0	0
REC	4.8	2.2	2.7	0	2.4	2.4	0	0	2.4	4.9	2.5	2.3	4.9	4.5	4.8	4.9	0	5.2	0	0
F.F	4.8	0	0	0	2.4	2.4	0	0	2.4	4.9	2.5	2.4	4.9	4.5	4.8	4.9	0	5.2	0	0
REW	4.8	0	0	0	2.4	2.4	0	0	2.4	4.9	2.5	2.4	4.9	4.5	4.8	4.9	0	5.2	0	0

REF. NO.	IC6001																			
MODE	101	102	103	104	105	106	107	108	109	110	111	112	113	114	115	116	117	118	119	120
STOP	2.5	2.7	5.0	0	1.7	5.0	0	4.9	0	0	0	4.8	0	4.9	4.9	0	4.9	0	0	0
PLAY	2.5	2.7	4.9	0	1.7	5.0	4.8	0.1	0	0	0	0	0	4.9	0	0	4.9	4.8	0	0
REC	2.5	2.7	4.9	0	0	5.0	0	0.1	0	0	0	4.8	0	4.9	0	0	4.9	0	0	0
F.F	2.5	2.7	4.9	0	1.7	5.0	0	0.1	0	0	0	4.8	0	4.9	0	4.9	4.9	0	0	0
REW	2.5	2.7	4.9	0	2.4	5.0	0	0:1	0	0	0	4.8	0	4.9	0	4.9	4.9	0	0	0

REF. NO.	IC6001																			
MODE	121	122	123	124																
STOP	0	0	0	4.9																
PLAY	0	0	0	4.9																
REC	0	0	0	4.9																
F.F	0	0	0	4.9																
REW	0	0	0	4.9																

REF. NO.	IC6002									IC6003									
MODE	1	2	3	4						1	2	3	4						
STOP	1.2	0	0	0						2.3	1.2	0	0						
PLAY	1.2	0	5.0	0						2.3	1.1	4.6	0						
REC	1.2	0	5.0	0						2.3	1.1	4.3	0						
F.F	1.2	0	2.2	0						2.3	1.1	2.2	0						
REW	1.2	0	2.2	0						2.3	1.1	2.2	0						

SYSTEM CONTROL & SERVO TRs DC VOLTAGE CHART (SP MODE)

REF. NO.	Q6001			Q6002			Q6003											
MODE	E	C	B	E	C		E	C										
STOP	5.0	–1.6	4.9	0	4.8		0	4.9										
PLAY	5.0	4.9	4.1	0	4.8		0	4.9										
REC	5.0	4.9	4.1	0	4.5		0	4.9										
F.F	5.0	4.9	4.1	0	4.5		0	4.9										
REW	5.0	4.9	4.1	0	4.8		0	4.9										

REF. NO.	QR6002			QR6004														
MODE	E	C	B	1	2	3	4	5										
STOP	5.0	0.3	4.8	0	0	4.6	0	4.6										
PLAY	5.0	0.3	4.8	0	0	4.6	0	4.6										
REC	5.0	0.3	4.8	0	0	4.6	0	4.6										
F.F	5.0	0.3	4.8	0	1.5	0	0	0										
REW	5.0	0.3	4.8	0	1.5	0	0	0										

MOTOR DRIVE ICs DC VOLTAGE CHART (SP MODE)

REF. NO.	IC2001																			
MODE	1	2	3	4	5	6	7	8	9	10										
STOP	1.3	14.9	14.9	0	0	0	7.2	9.6	1.4	0										
PLAY	0.9	14.4	14.4	0	0	0	7.2	9.3	1.2	0										
REC	1.5	14.4	14.4	0	0	0	7.2	9.3	1.6	0										
F.F	0.8	14.4	14.4	0	0	0	14.4	9.3	1.6	0										
REW	1.4	14.4	14.4	0	0	0	14.4	9.3	1.0	0										
REF. NO.	IC2002																			
MODE	1	2	3	4	5	6	7	8	9	10	11	12	13	14	15	16	17	18	19	20
STOP	1.8	4.3	1.8	14.2	1.1	14.9	0	0	1.9	2.7	1.3	0	0	4.9	1.4	0	2.2	2.2	2.2	2.2
PLAY	1.7	4.3	1.7	13.2	2.1	14.4	0	0.5	0.6	2.7	2.5	0.4	0	4.9	1.4	0	2.2	2.2	2.2	2.2
REC	1.7	4.3	1.7	13.2	2.1	14.4	0	0.5	0.6	2.7	2.5	0.4	0	4.9	1.4	0	2.2	2.2	2.2	2.2
F.F	6.9	14.3	6.9	7.4	12.5	14.4	0	0.5	0.6	2.7	2.4	0.4	0	4.9	1.4	0	2.2	2.2	2.2	2.2
REW	6.9	14.3	6.9	7.1	12.5	14.4	0	0.5	0.6	2.7	2.4	0.4	0	4.9	1.4	0	2.2	2.2	2.2	2.2
REF. NO.	IC2002																			
MODE	21	22	23	24	25	26	27	28	29	30	31	32								
STOP	2.2	2.2	0	6.4	6.4	6.4	6.4	12.4	2.0	1.8	0	0								
PLAY	2.2	2.2	0	6.4	6.4	6.4	6.4	12.4	0	1.7	0	0								
REC	2.2	2.2	0	6.4	6.4	6.4	6.4	12.4	0	1.7	0	0								
F.F	2.2	2.2	0	6.4	6.4	6.4	6.4	12.4	0	6.9	0	0								
REW	2.2	2.2	0	6.4	6.4	6.4	6.4	12.4	4.9	6.9	0	0								
REF. NO.	IC2003																			
MODE	1	2	3	4	5	6	7	8	9	10	11	12	13	14	15	16	17	18		
STOP	14.9	14.9	0	0	0	2.4	4.6	0.6	0.7	1.0	4.9	4.1	4.1	3.7	4.9	14.9	14.9	0		
PLAY	14.1	14.1	0	0.5	0	2.4	2.3	0.6	0.6	2.6	4.9	3.6	3.6	3.6	1.1	14.4	14.1	0		
REC	14.1	14.1	0	0.5	0	2.4	2.3	0.6	0.6	2.6	4.9	3.6	3.6	3.6	1.1	14.4	14.1	0		
F.F	14.1	14.1	0	0.5	0	2.4	2.4	0.6	0.6	2.6	4.9	3.6	3.6	3.6	1.1	14.4	14.1	0		
REW	14.1	14.1	0	0.5	0	2.4	2.4	0.6	0.6	2.6	4.9	3.6	3.6	3.6	1.1	14.4	14.1	0		

MOTOR DRIVE TRs DC VOLTAGE CHART (SP MODE)

REF. NO.	QR6001																	
MODE	1	2	3	4	5													
STOP	0	0	4.8	0	4.8													
PLAY	0	0	4.8	0	4.8													
REC	0	0	4.8	0	4.8													
F.F	8.0	14.4	0	0	0													
REW	8.0	14.4	0	0	0													

3-8. MOTOR DRIVE SECTION IN MAIN SCHEMATIC DIAGRAM

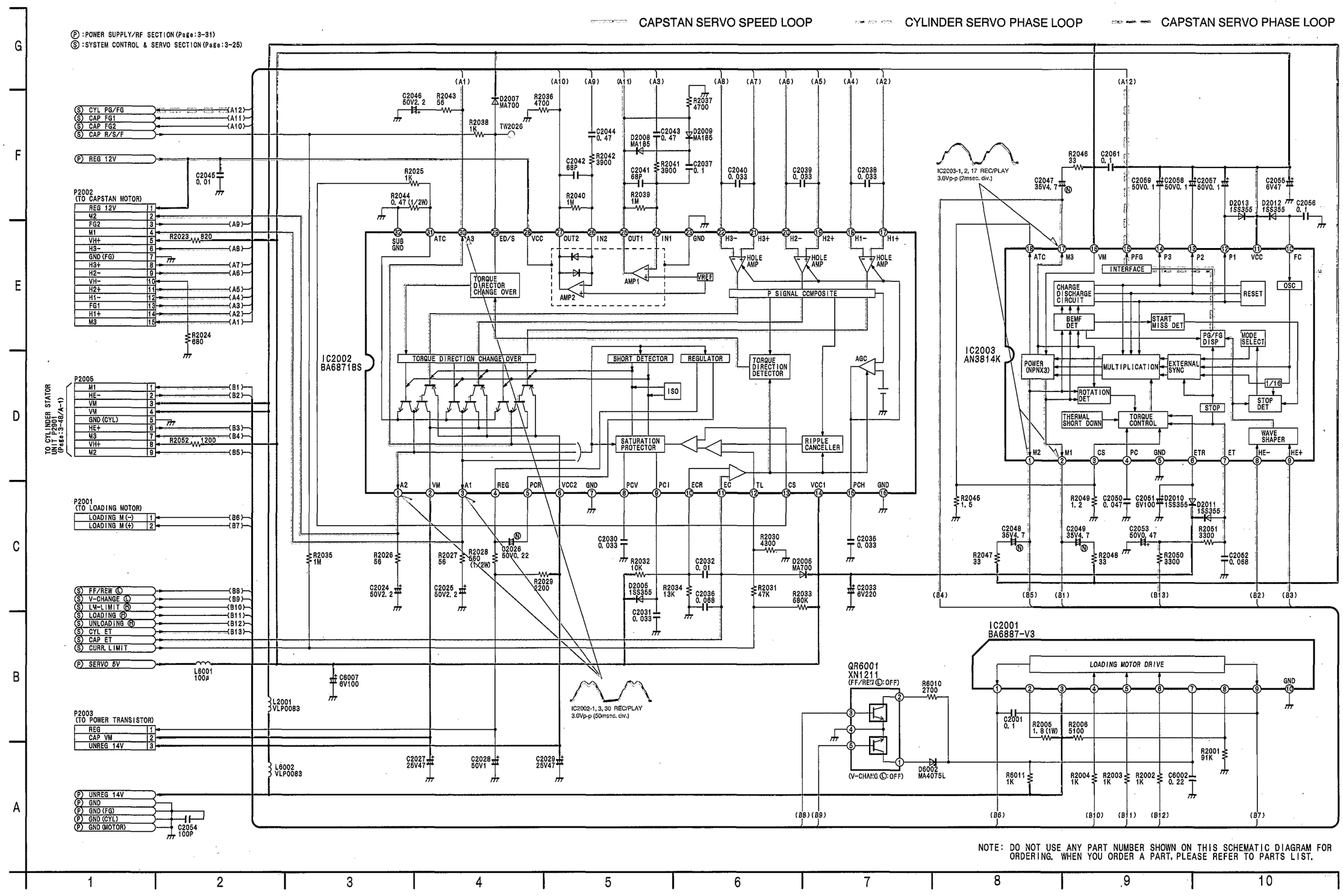

3-9. POWER SUPPLY/RF SECTION IN MAIN SCHEMATIC DIAGRAM

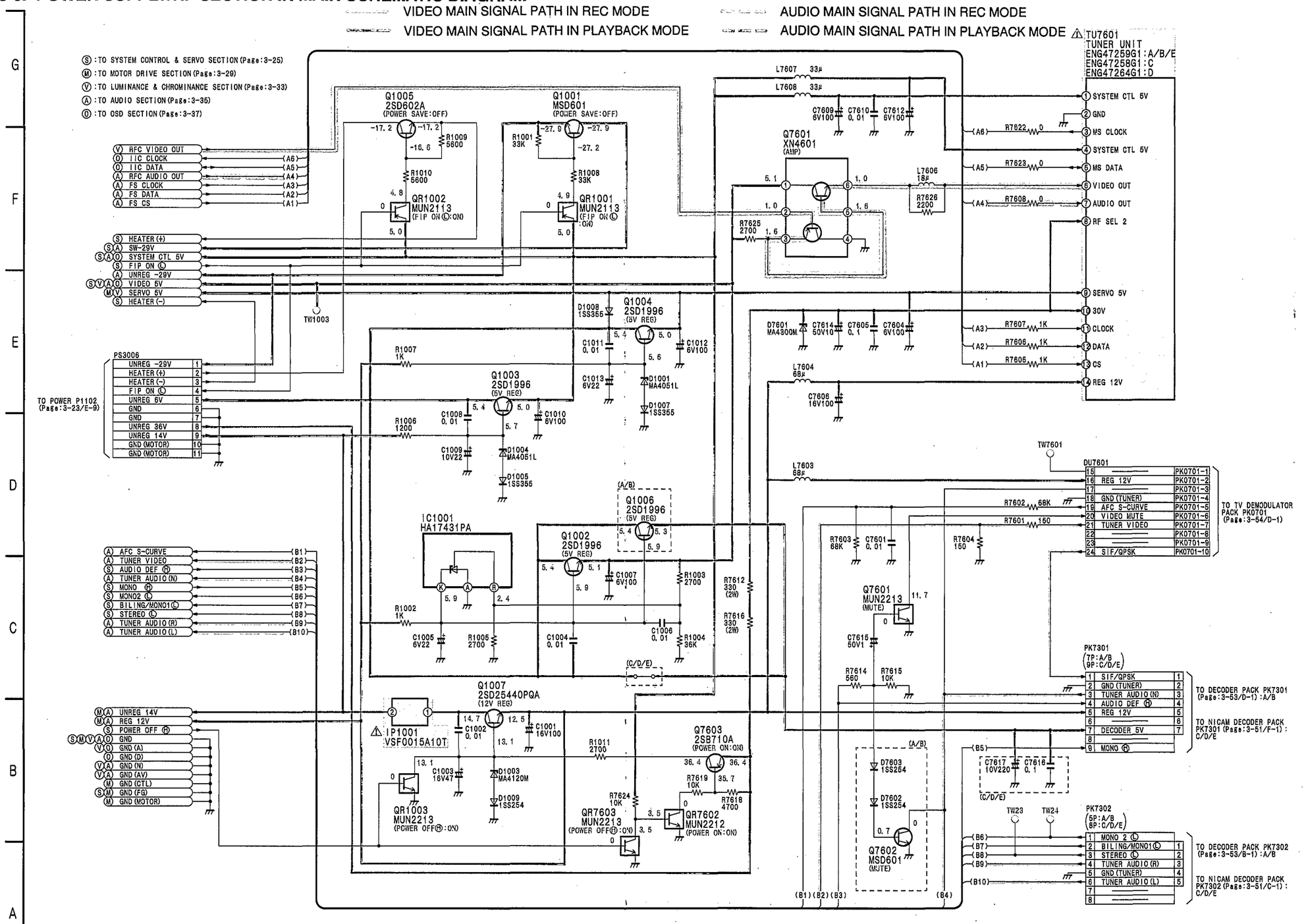

IMPORTANT SAFETY NOTICE:
COMPONENTS IDENTIFIED WITH THE MARK ⚠ HAVE THE SPECIAL CHARACTERISTICS FOR SAFETY.
WHEN REPLACING ANY OF THESE COMPONENTS, USE ONLY THE SAME TYPE.

NOTE: DO NOT USE ANY PART NUMBER SHOWN ON THIS SCHEMATIC DIAGRAM FOR ORDERING. WHEN YOU ORDER A PART, PLEASE REFER TO PARTS LIST.

NOTE: THE MEASUREMENT MODE OF THE DC VOLTAGE ON THIS DIAGRAM IS STOP MODE.

3-10. LUMINANCE & CHROMINANCE SECTION IN MAIN SCHEMATIC DIAGRAM

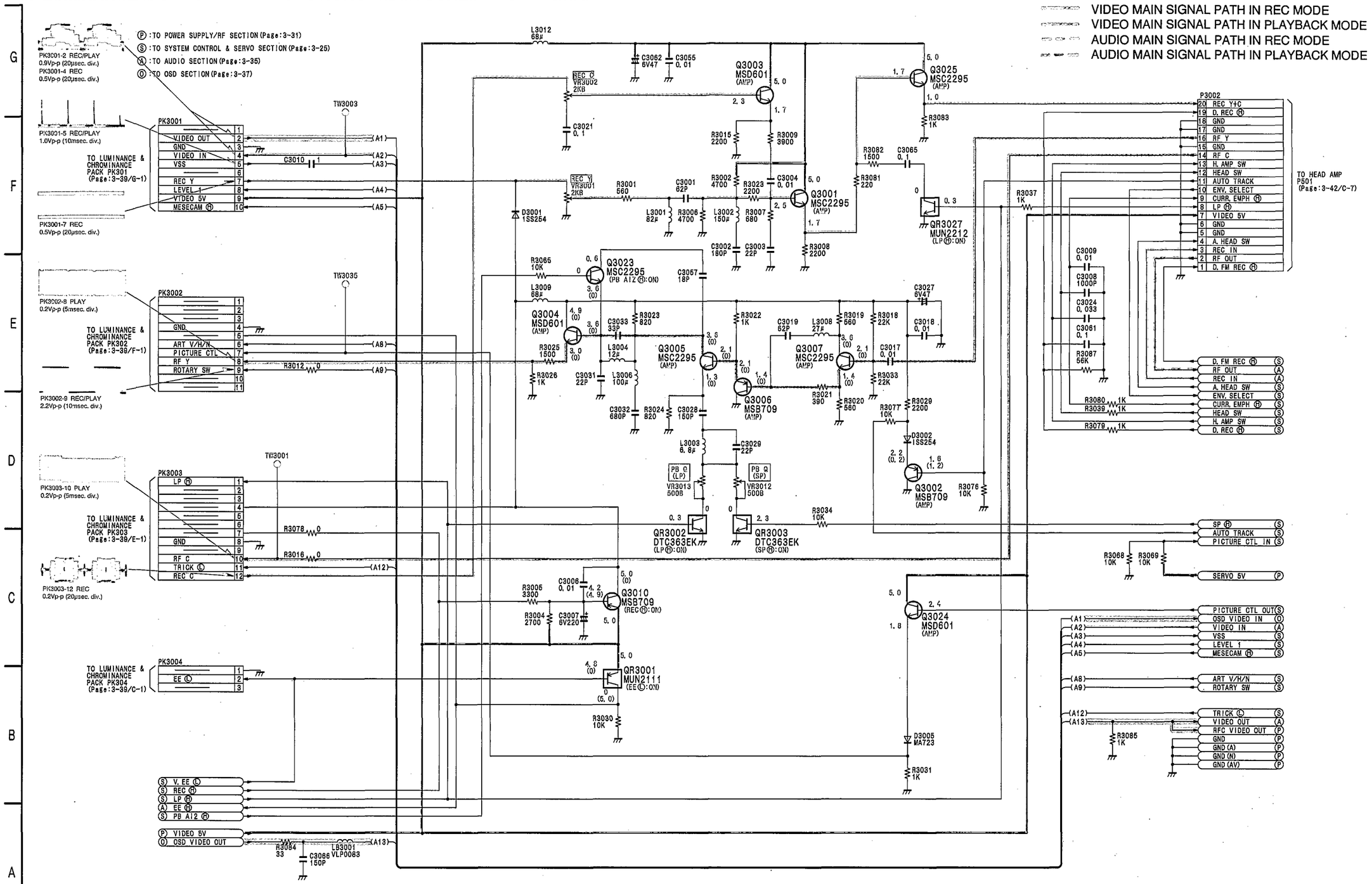

NOTE: THE MEASUREMENT MODE OF THE DC VOLTAGE IN THE BRACKETS( ) ON THIS DIAGRAM IS RECORD MODE WITH PAL COLOUR SIGNAL. (SP MODE)
THE MEASUREMENT MODE OF THE DC VOLTAGE OUT OF THE BRACKETS ON THIS DIAGRAM IS PLAYBACK MODE WITH PAL COLOUR SIGNAL. (SP MODE)

NOTE: DO NOT USE ANY PART NUMBER SHOWN ON THIS SCHEMATIC DIAGRAM FOR ORDERING. WHEN YOU ORDER A PART, PLEASE REFER TO PARTS LIST.

3-11. AUDIO SECTION IN MAIN SCHEMATIC DIAGRAM

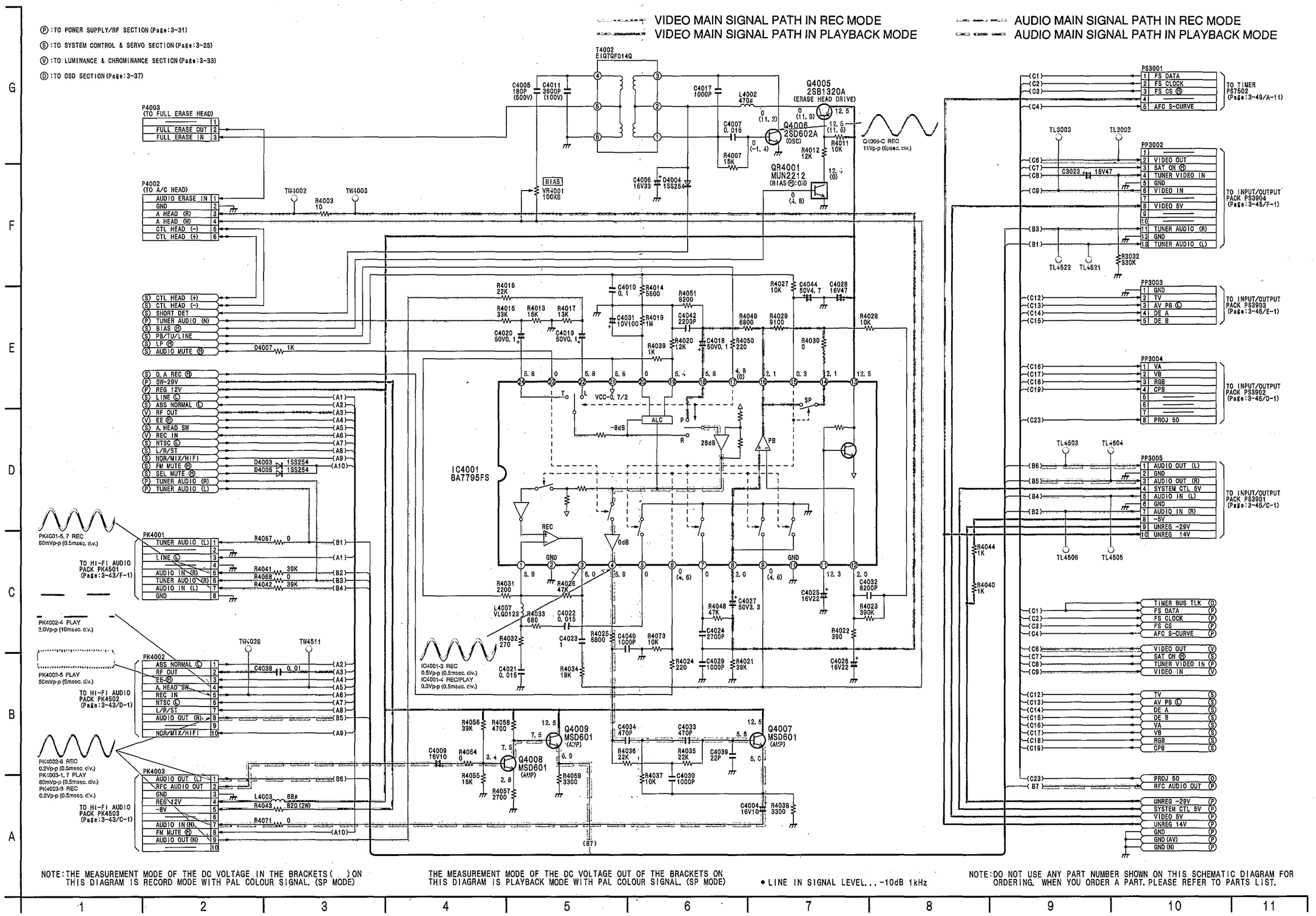

NOTE: THE MEASUREMENT MODE OF THE DC VOLTAGE IN THE BRACKETS ( ) ON THIS DIAGRAM IS RECORD MODE WITH PAL COLOUR SIGNAL. (SP MODE)

THE MEASUREMENT MODE OF THE DC VOLTAGE OUT OF THE BRACKETS ON THIS DIAGRAM IS PLAYBACK MODE WITH PAL COLOUR SIGNAL. (SP MODE)

• LINE IN SIGNAL LEVEL... -10dB 1kHz

NOTE: DO NOT USE ANY PART NUMBER SHOWN ON THIS SCHEMATIC DIAGRAM FOR ORDERING. WHEN YOU ORDER A PART, PLEASE REFER TO PARTS LIST.

3-12. OSD SECTION IN MAIN SCHEMATIC DIAGRAM

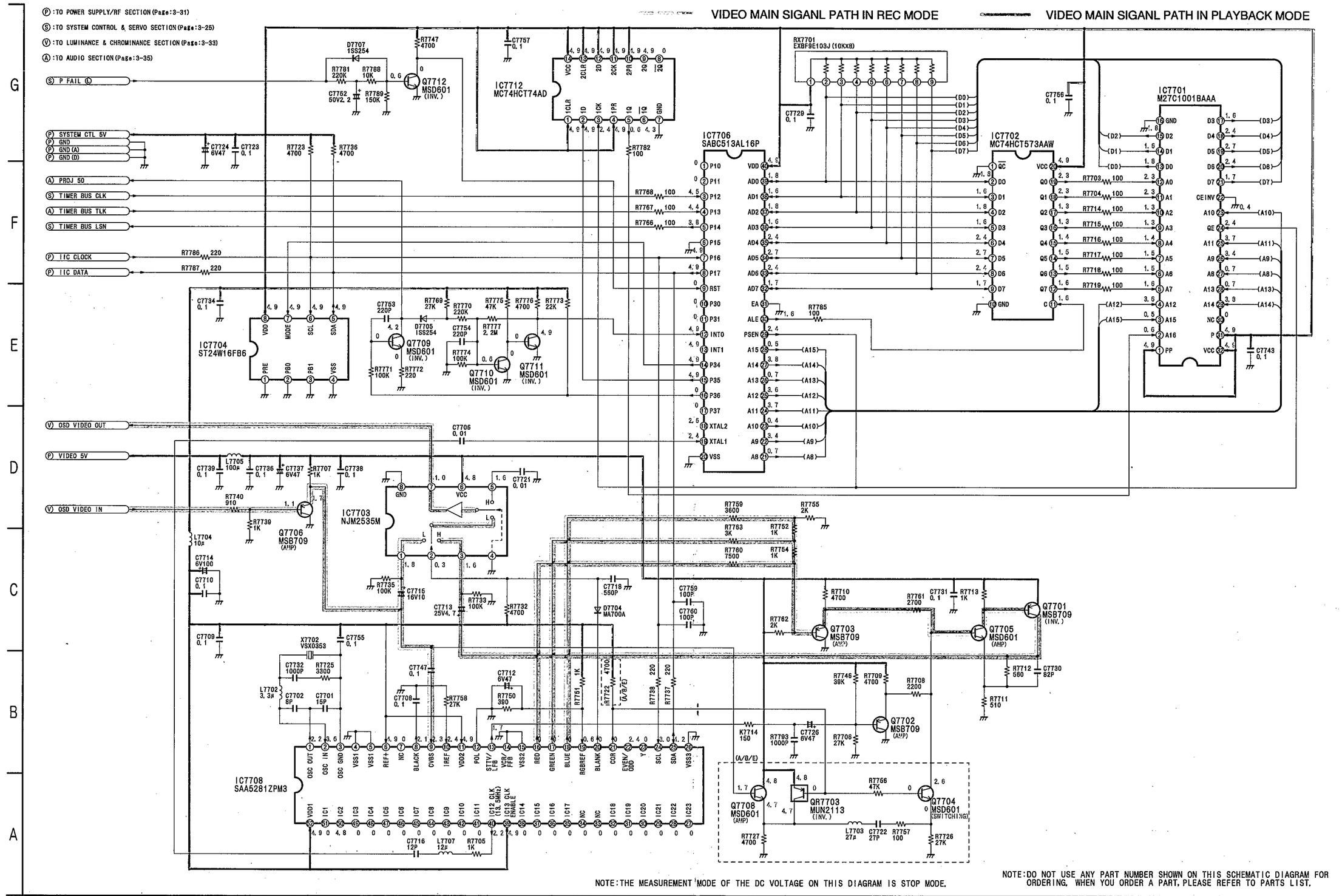

3-13. LUMINANCE & CHROMINANCE PACK SCHEMATIC DIAGRAM

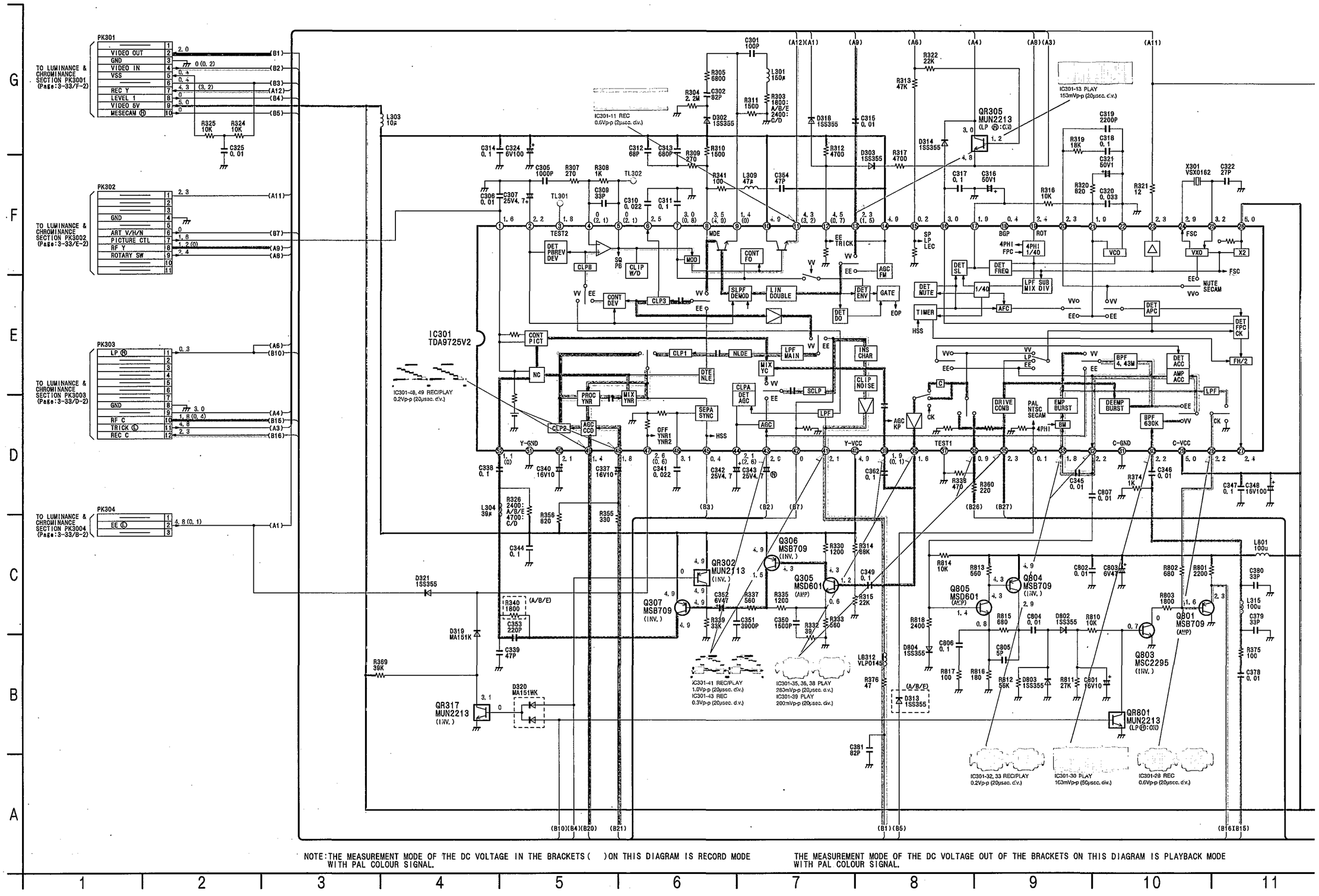

NOTE: THE MEASUREMENT MODE OF THE DC VOLTAGE IN THE BRACKETS ( ) ON THIS DIAGRAM IS RECORD MODE WITH PAL COLOUR SIGNAL.

THE MEASUREMENT MODE OF THE DC VOLTAGE OUT OF THE BRACKETS ON THIS DIAGRAM IS PLAYBACK MODE WITH PAL COLOUR SIGNAL.

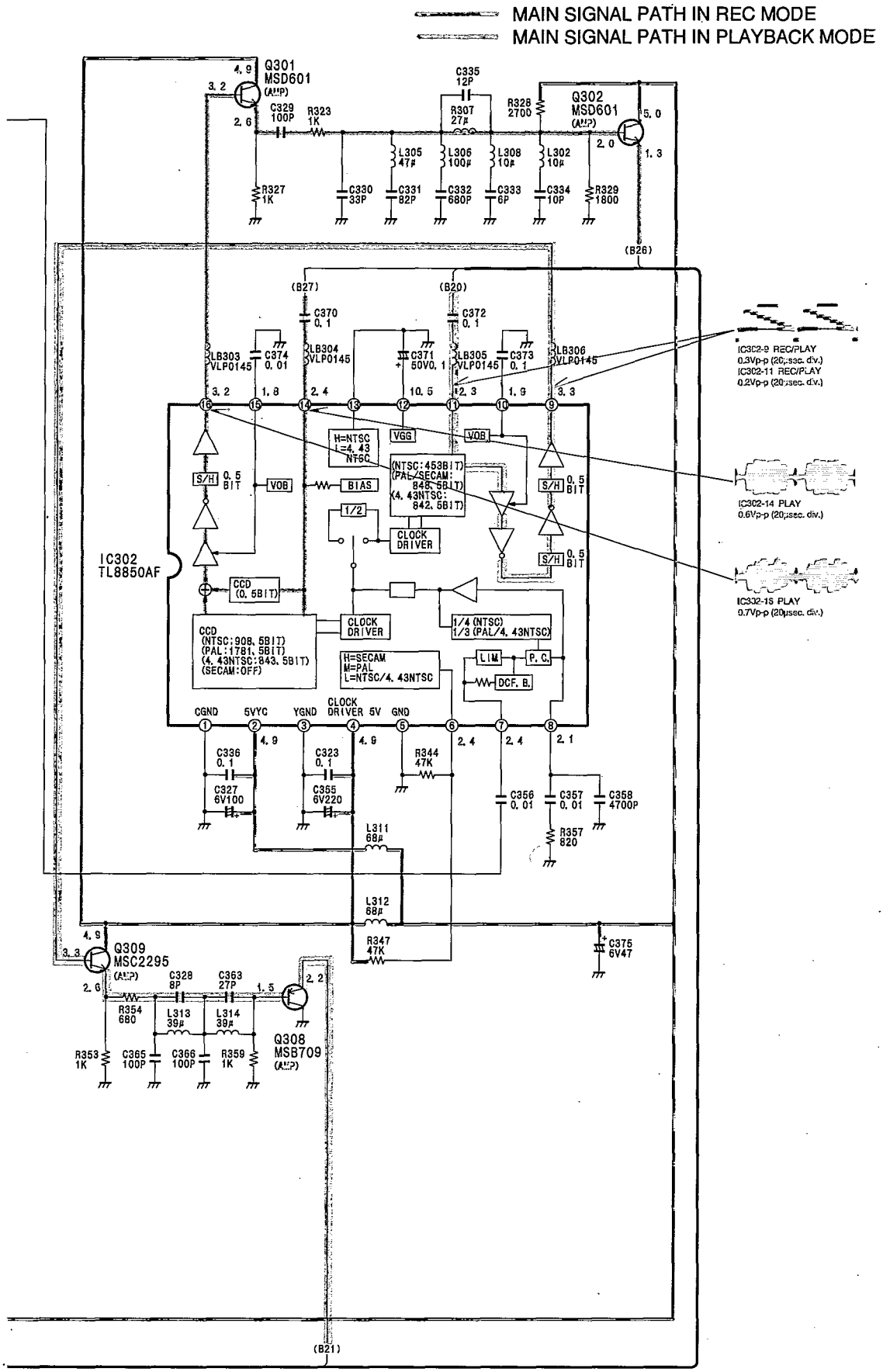

NOTE: DO NOT USE ANY PART NUMBER SHOWN ON THIS SCHEMATIC DIAGRAM FOR ORDERING. WHEN YOU ORDER A PART, PLEASE REFER TO PARTS LIST.

12 13 14 15 16

3-14. HEAD AMP SCHEMATIC DIAGRAM

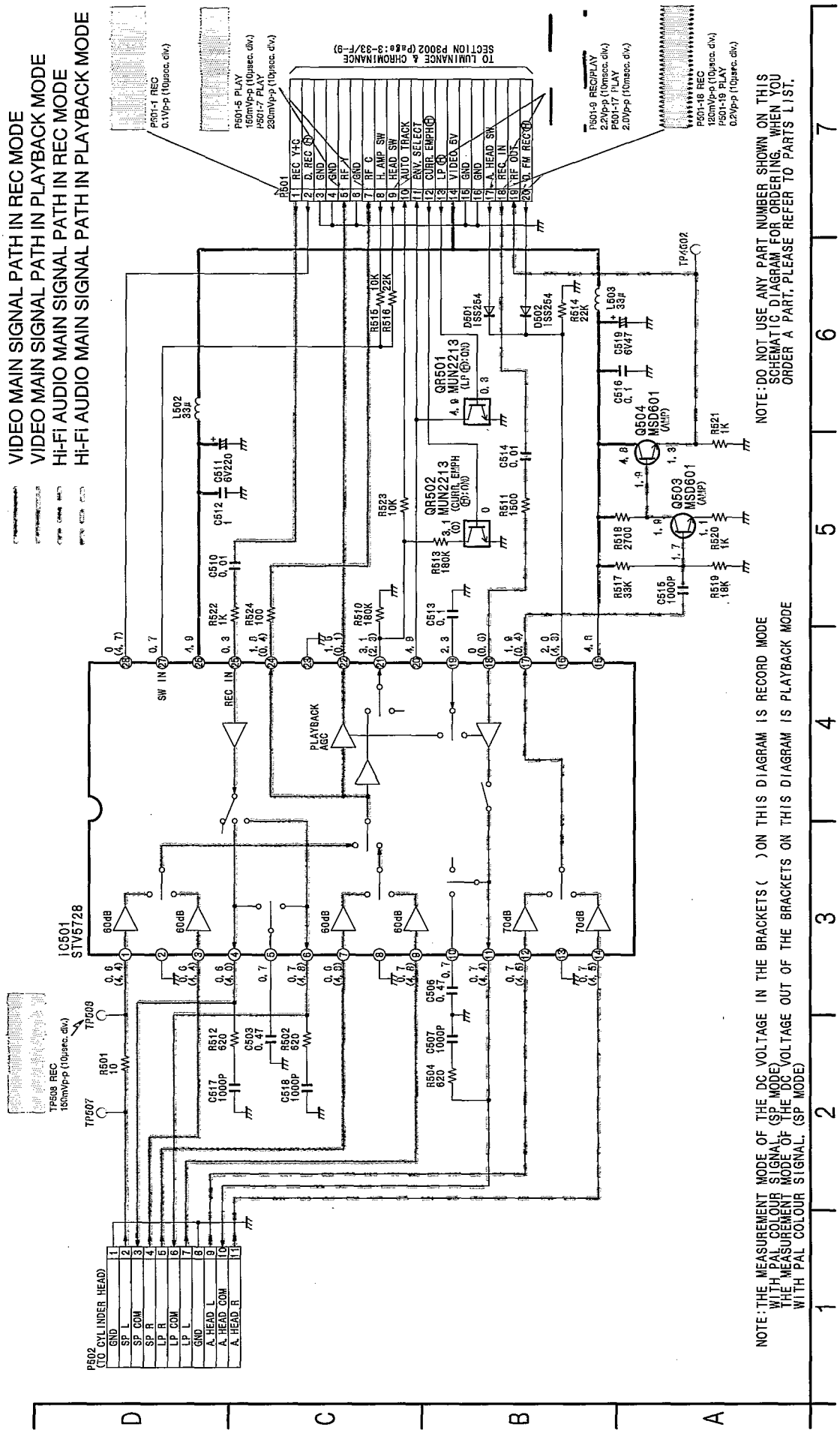

3-15. Hi-Fi AUDIO PACK SCHEMATIC DIAGRAM

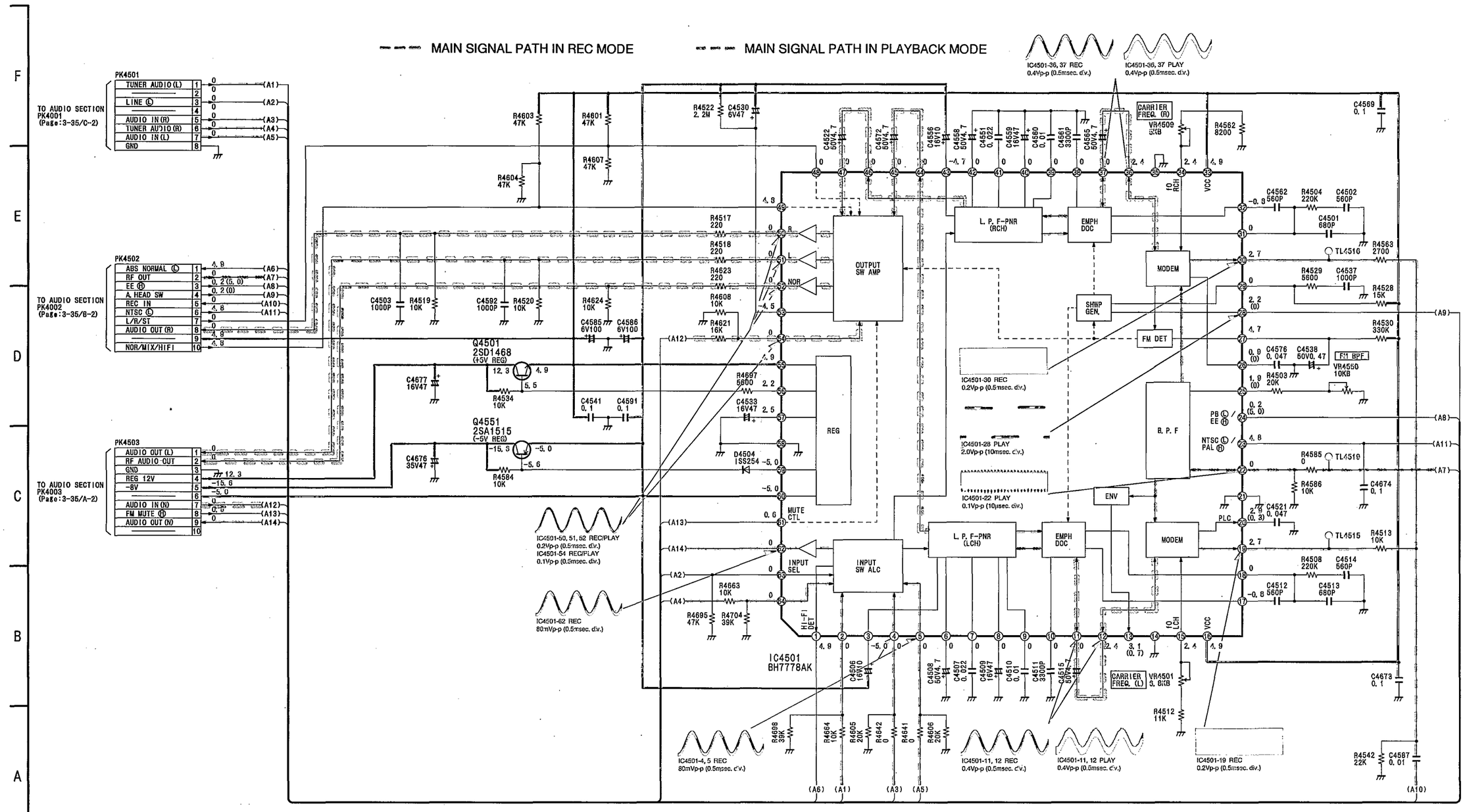

NOTE: THE MEASUREMENT MODE OF THE DC VOLTAGE IN THE BRACKETS ( ) ON THIS DIAGRAM IS RECORD MODE WITH PAL COLOUR SIGNAL (SP MODE) ·LINE IN SIGNAL LEVEL...-10dB 1kHz

THE MEASUREMENT MODE OF THE DC VOLTAGE OUT OF THE BRACKETS ON THIS DIAGRAM IS PLAYBACK MODE WITH PAL COLOUR SIGNAL (SP MODE) ·LINE IN SIGNAL LEVEL...-10dB 1kHz

NOTE: DO NOT USE ANY PART NUMBER SHOWN ON THIS SCHEMATIC DIAGRAM FOR ORDERING. WHEN YOU ORDER A PART, PLEASE REFER TO PARTS LIST.

3-16. INPUT/OUTPUT PACK SCHEMATIC DIAGRAM

VIDEO MAIN SIGNAL PATH IN REC MODE
VIDEO MAIN SIGNAL PATH IN PLAYBACK MODE

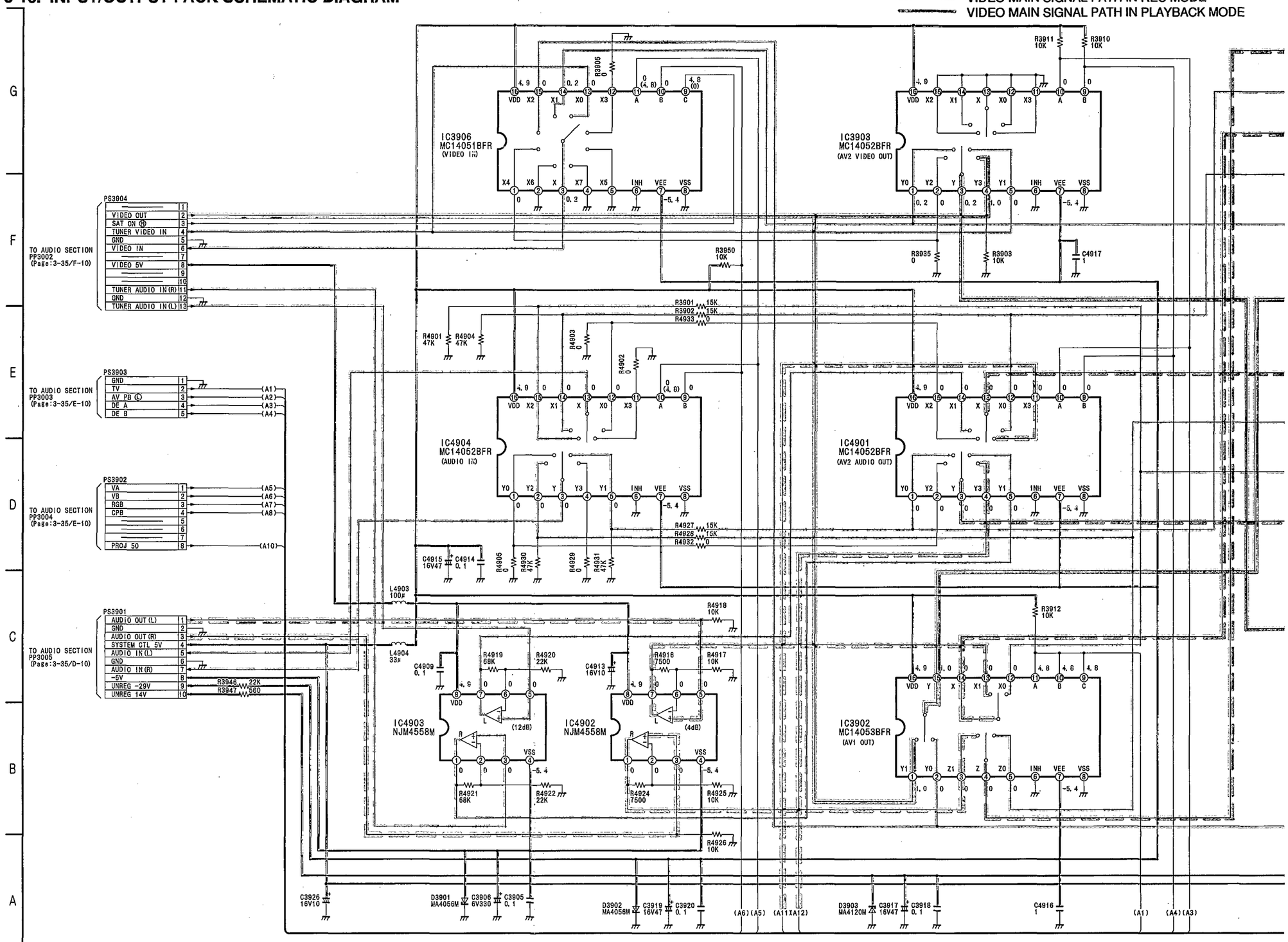

NOTE: THE MEASUREMENT MODE OF THE DC VOLTAGE IN THE BRACKETS ( ) ON THIS DIAGRAM IS RECORD MODE WITH PAL COLOUR SIGNAL. (SP MODE)

THE MEASUREMENT MODE OF THE DC VOLTAGE OUT OF THE BRACKETS ON THIS DIAGRAM IS PLAYBACK MODE WITH PAL COLOUR SIGNAL. (SP MODE)

AUDIO MAIN SIGNAL PATH IN REC MODE
AUDIO MAIN SIGNAL PATH IN PLAYBACK MODE

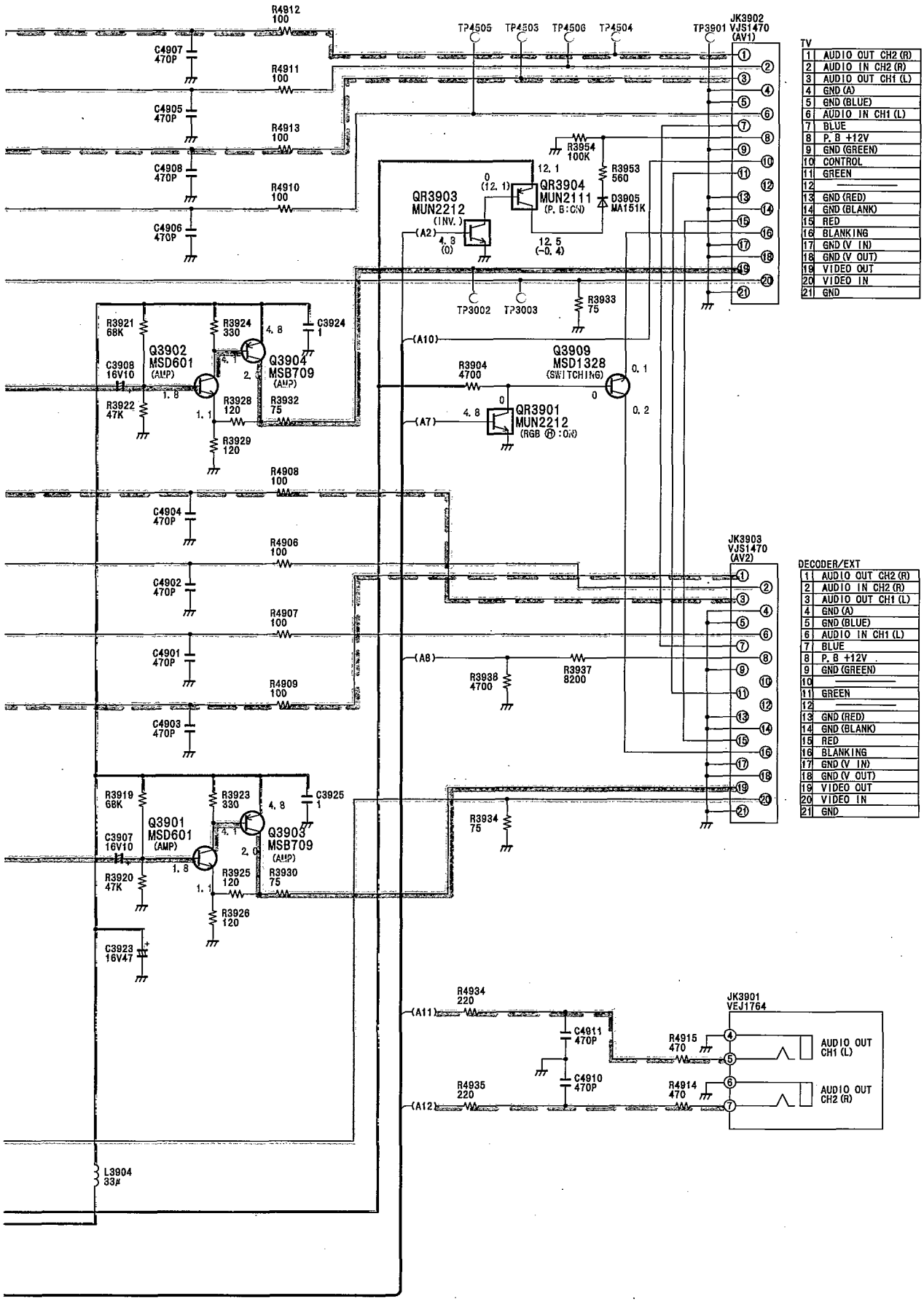

NOTE: DO NOT USE ANY PART NUMBER SHOWN ON THIS SCHEMATIC DIAGRAM FOR ORDERING. WHEN YOU ORDER A PART, PLEASE REFER TO PARTS LIST.

11	12	13	14	15

3-17. CYLINDER STATOR UNIT SCHEMATIC DIAGRAM

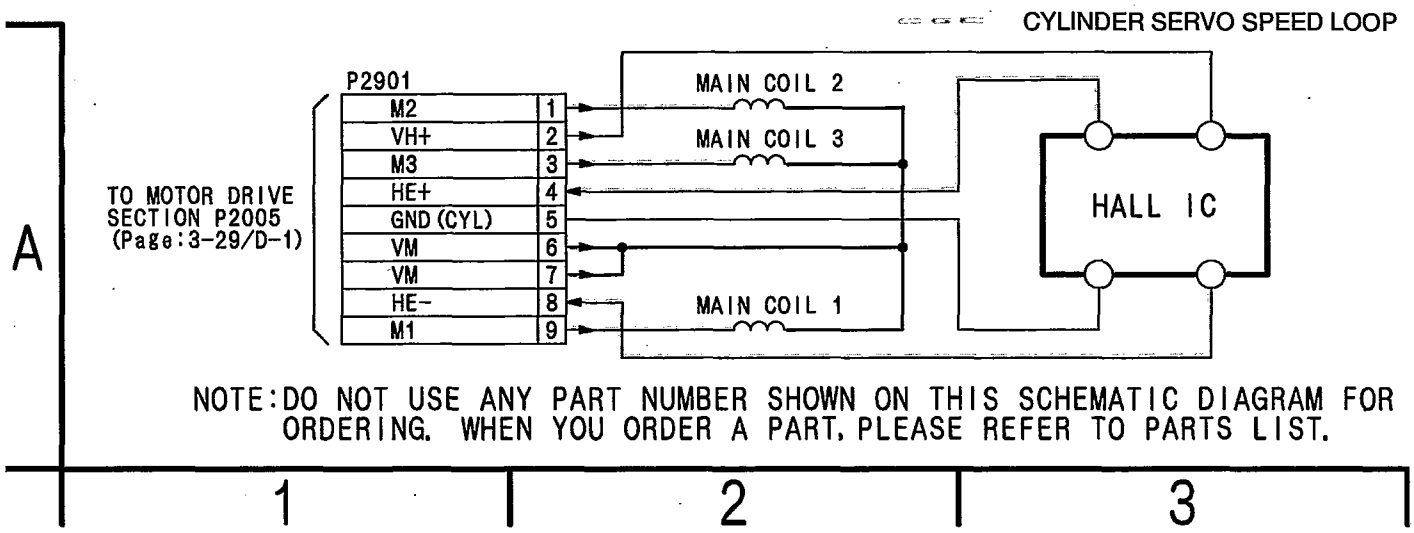

NOTE:DO NOT USE ANY PART NUMBER SHOWN ON THIS SCHEMATIC DIAGRAM FOR ORDERING. WHEN YOU ORDER A PART, PLEASE REFER TO PARTS LIST.

3-18. OPERATION SCHEMATIC DIAGRAM

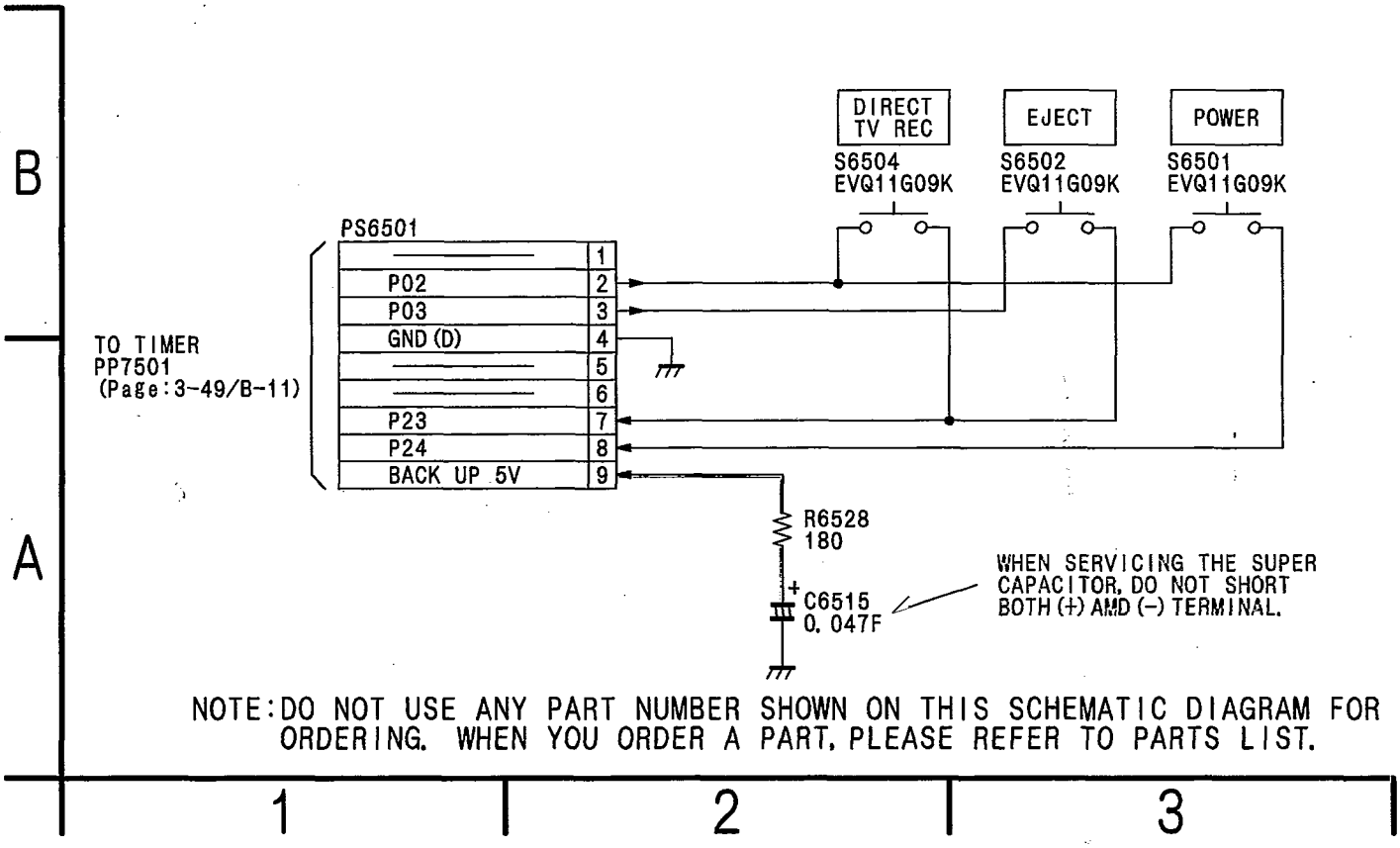

NOTE:DO NOT USE ANY PART NUMBER SHOWN ON THIS SCHEMATIC DIAGRAM FOR ORDERING. WHEN YOU ORDER A PART, PLEASE REFER TO PARTS LIST.

3-19. TIMER SCHEMATIC DIAGRAM

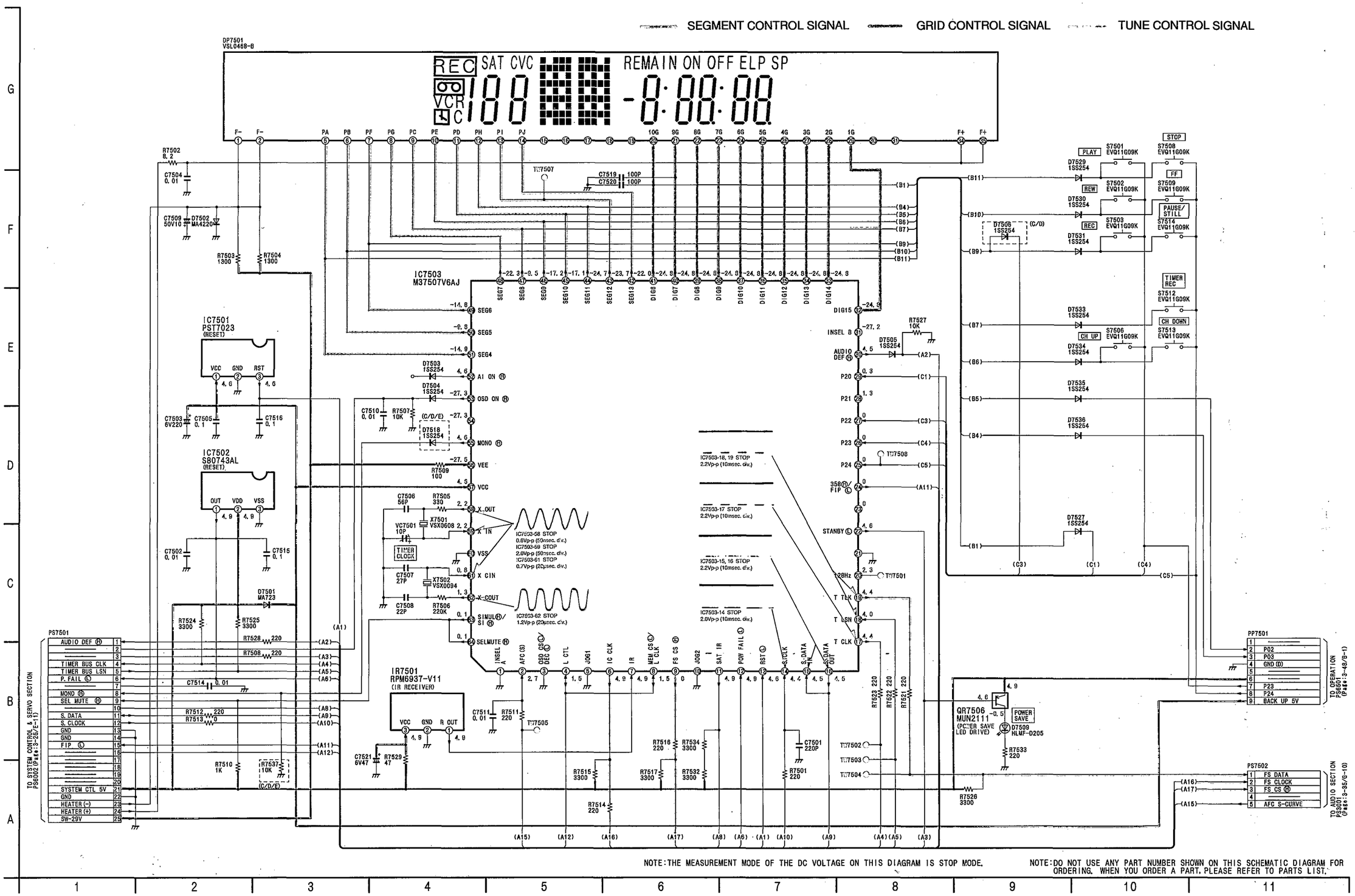

3-20. NICAM DECODER PACK SCHEMATIC DIAGRAM (NV-HD620B/BL/EC)

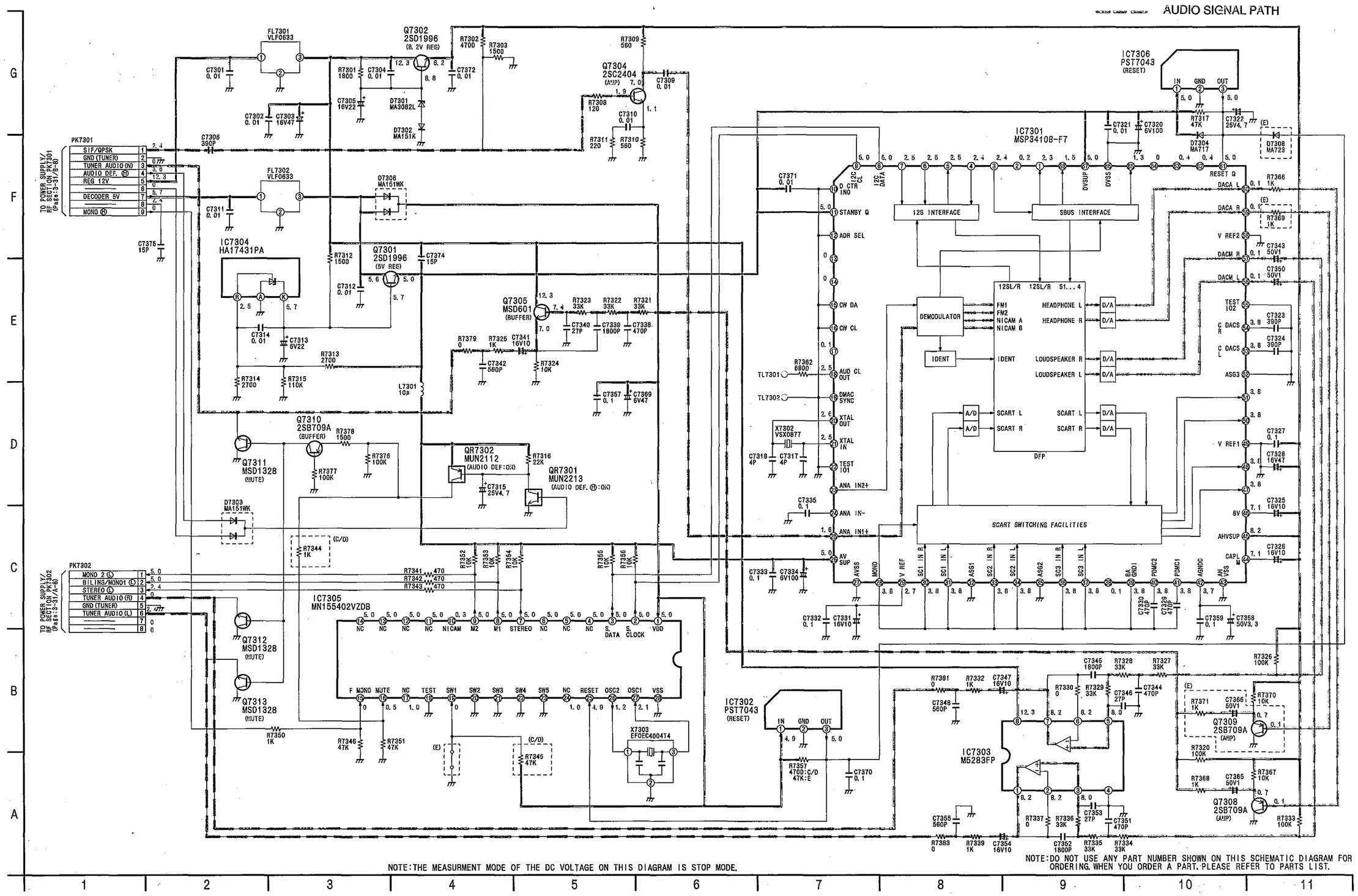

3-21. DECODER PACK SCHEMATIC DIAGRAM (NV-HD620EG/EGH)

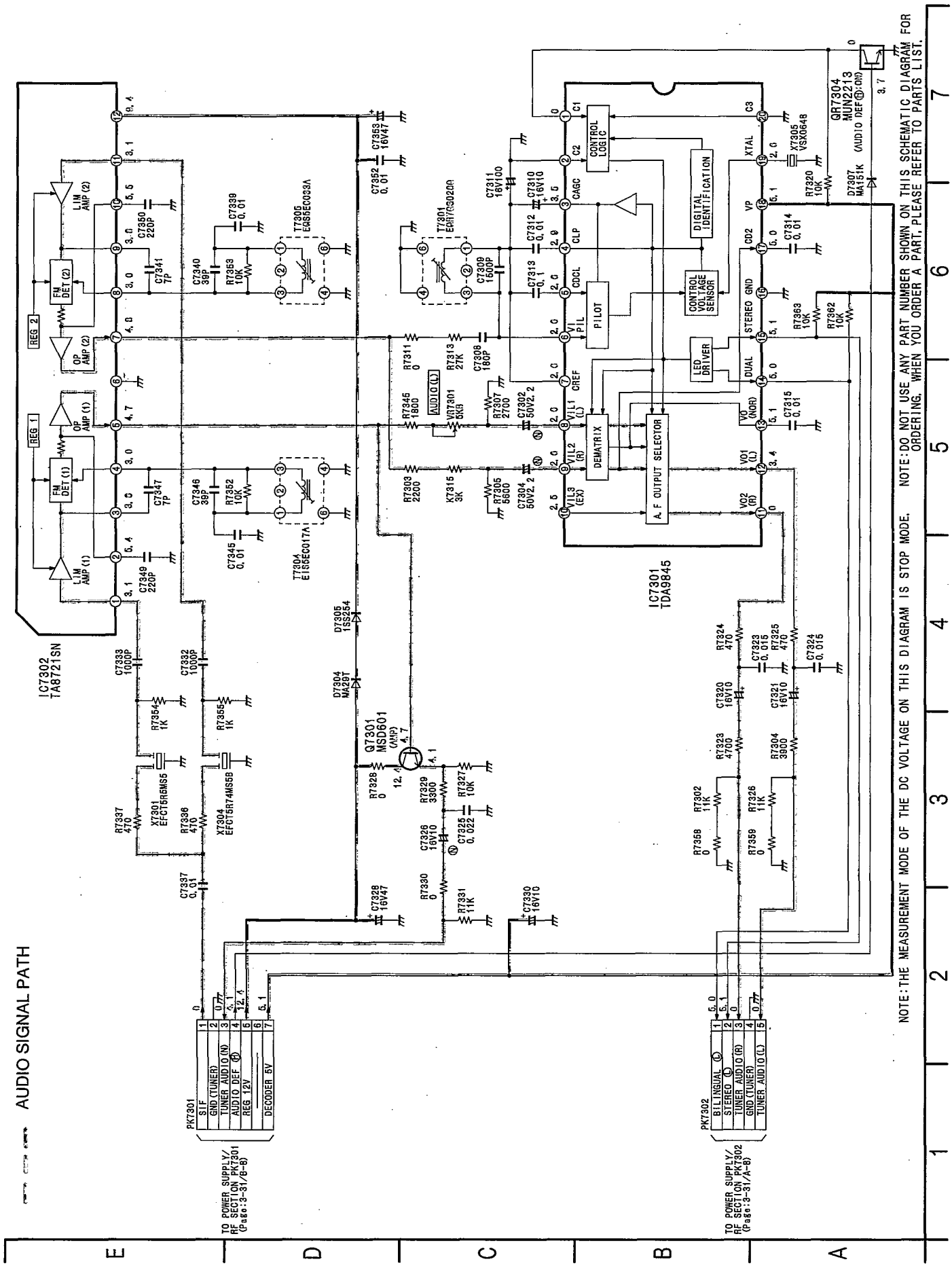

3-22. TV DEMODULATOR PACK SCHEMATIC DIAGRAM

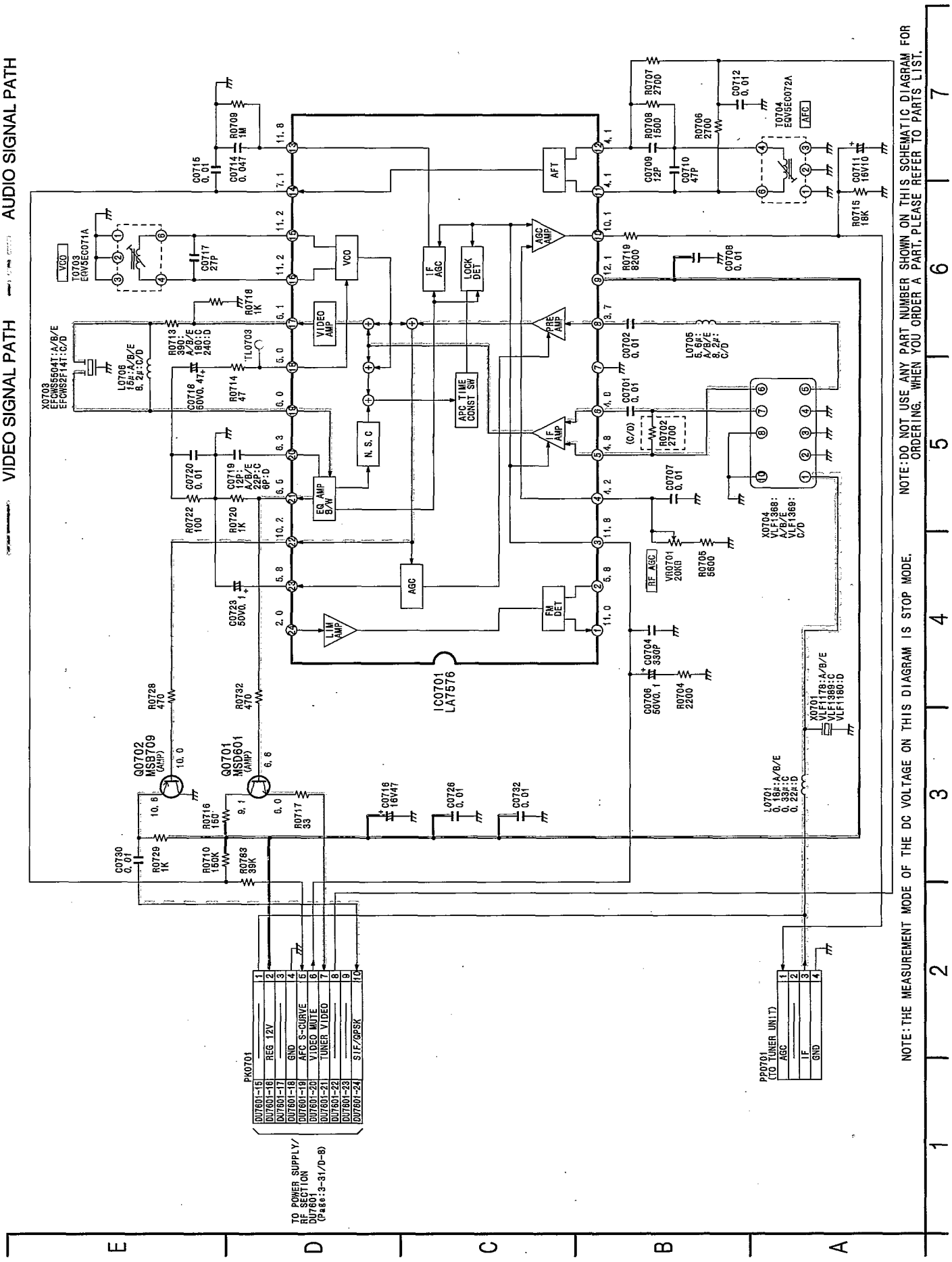

3-23. POWER C.B.A. (VEP01763C)

POWER C.BA.	
Transistor	
Q1101	A-4
Q1102	A-4
Q1111	B-4
Transistor & Resistor	
QR1101	A-4
QR1103	B-5
Integrated Circuit	
IC1101	B-3
Connector	
P1101	B-1
P1102	B-6

ADDRESS INFORMATION

CAUTION

THE RED MARK INDICATES THE PRIMARY CIRCUIT TO DISTINGUISH THE PRIMARY FROM THE SECONDARY CIRCUIT.
PAY ATTENTION NOT TO RECEIVE AN ELECTRIC SHOCK DURING REPAIR AND SERVICE OF THE PRODUCTS.

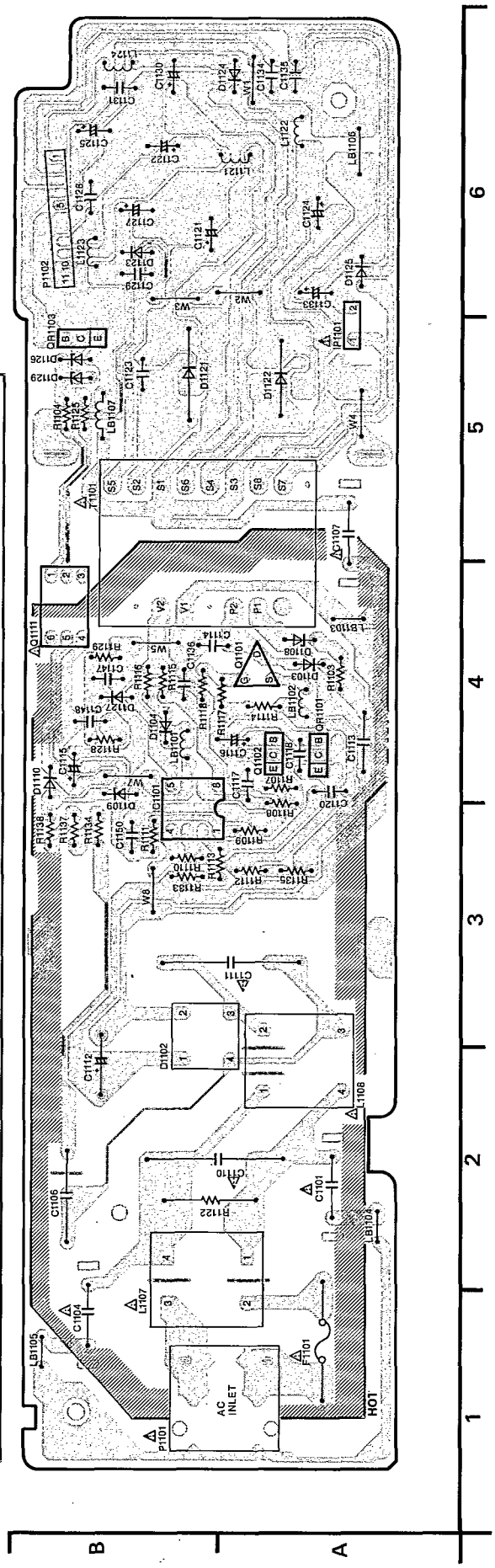

3-24. CYLINDER STATOR UNIT (VEK7236)

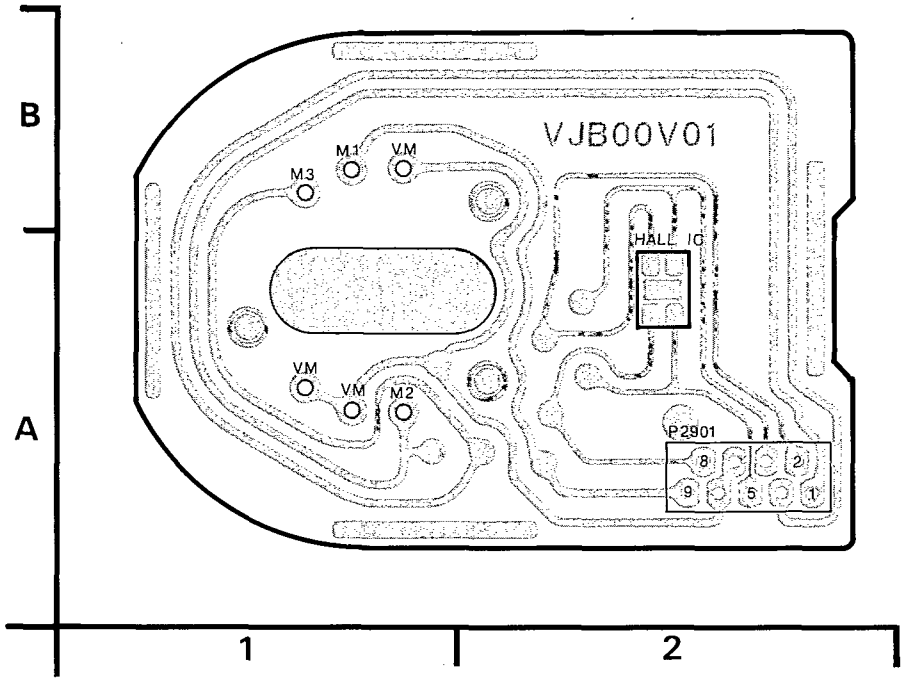

CYLINDER STATOR UNIT	
Integrated Circuit	
HALL IC	A-2
Connector	
P2901	A-2

ADDRESS INFORMATION

MAIN C.B.A.

Transistor	
Q1001	B-1
Q1002	D-2
Q1003	C-1
Q1004	C-2
Q1005	B-1
Q1006	D-1
Q1007	C-1
Q3001	B-10
Q3002	G-8
Q3003	B-9
Q3004	G-9
Q3005	F-9
Q3006	F-8
Q3007	F-7
Q3010	C-9
Q3023	F-8
Q3024	F-9
Q3025	B-10
Q4005	H-1
Q4006	G-1
Q4007	G-2
Q4008	G-2
Q4009	G-2
Q6001	E-5
Q6002	D-1
Q6003	D-8
Q7601	G-10
Q7602	E-10
Q7603	B-1
Q7701	D-7
Q7702	E-7
Q7703	E-7
Q7704	C-8
Q7705	D-7
Q7706	B-8
Q7708	B-8
Q7709	B-5
Q7710	B-5
Q7711	B-5
Q7712	B-5

Transistor & Resistor	
QR1001	A-1
QR1002	A-1
QR1003	B-1
QR3001	F-9
QR3002	F-8
QR3003	F-9
QR3027	B-9
QR4001	H-1
QR6001	E-1
QR6002	E-2
QR6004	D-4
QR7601	D-10
QR7602	A-2
QR7603	B-2
QR7703	C-8

Integrated Circuit	
IC1001	C-1
IC2001	E-1
IC2002	F-4
IC2003	F-6
IC4001	F-2
IC6001	C-3
IC6002	A-6
IC6003	B-4
IC7701	C-7
IC7702	B-6
IC7703	B-8
IC7704	B-8
IC7706	C-6
IC7708	D-6
IC7712	C-7

Test Point	
TL2001	H-7
TL2002	D-5
TL2009	C-5
TL3002	H-10
TL3003	H-9
TL4503	H-6
TL4504	H-4
TL4505	H-6
TL4506	H-6
TL4521	H-9
TL4522	H-9
TL6001	D-4
TL6002	D-3
TW23	C-10
TW24	C-10
TW1003	A-9
TW2001	H-8
TW2002	H-3
TW2026	G-4
TW3001	G-9
TW3003	H-10
TW3026	B-9
TW3035	E-9
TW4002	G-2
TW4003	G-2
TW4028	H-3
TW4511	H-4
TW7601	C-11

Adjustment	
VR2001	F-1
VR3001	B-9
VR3002	B-9
VR3012	F-9
VR3013	F-8
VR3014	E-1
VR4001	F-1

Connector	
P2001	B-3
P2002	G-4
P2003	G-3
P2005	G-5
P3002	G-7
P4002	G-2
P4003	G-3
P6001	D-2
DU7601	D-11
PK3001	C-9
PK3002	D-9
PK3003	E-9
PK3004	G-9
PK4001	H-4
PK4002	H-3
PK4003	H-2
PK7301	C-10
PK7302	B-10
PP3002	H-9
PP3003	H-8
PP3004	H-7
PP3005	H-5
PS3001	A-8
PS3006	B-1
PS6002	A-1
TU7601	E-11

ADDRESS INFORMATION

3-25. MAIN C.B.A. (VEP06B97A: NV-HD620EG/EGH) (VEP06B97B: NV-HD620B) (VEP06B97C: NV-HD620BL) (VEP06B97D: NV-HD620EC)

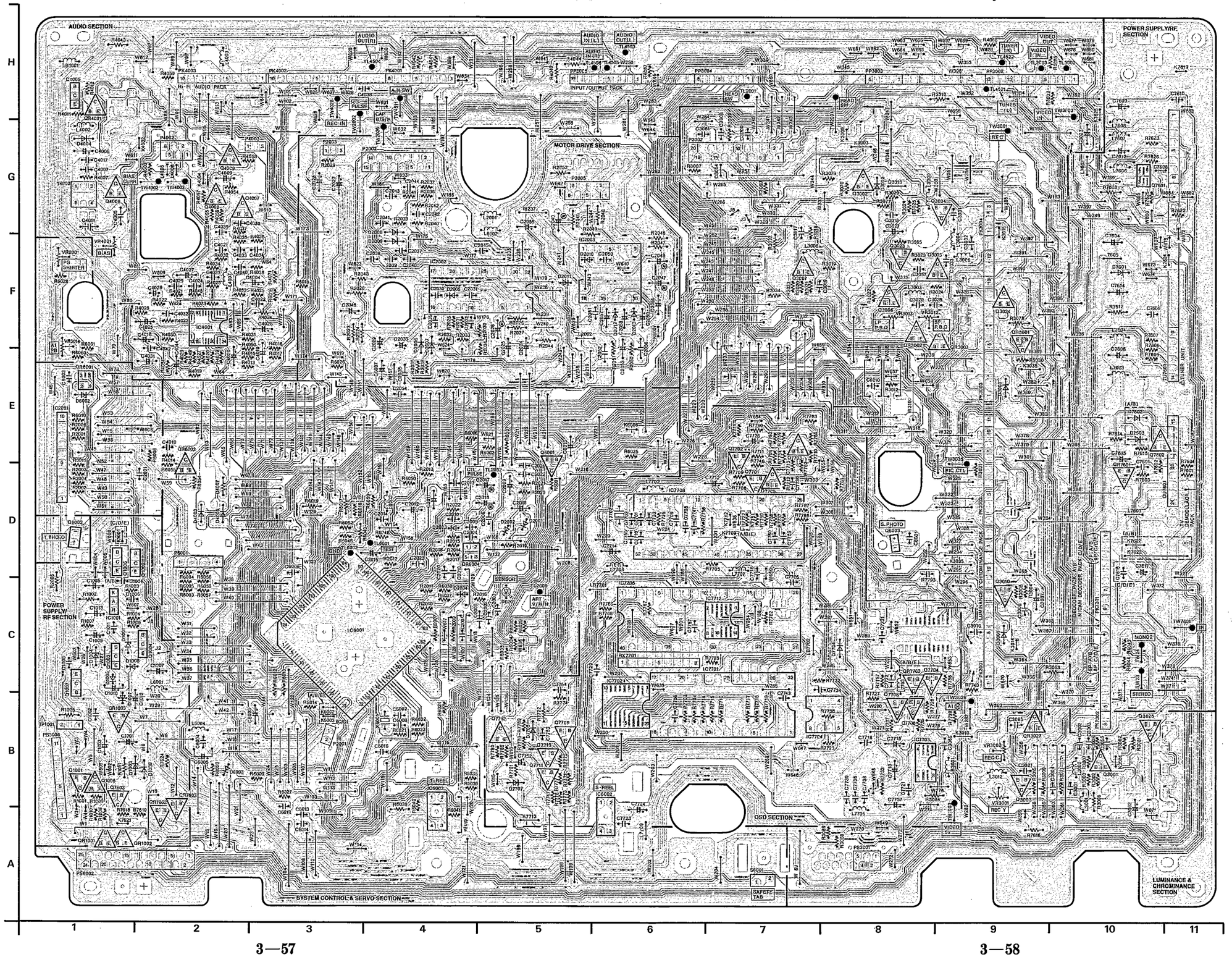

3-26. LUMINANCE & CHROMINANCE PACK C.B.A. (VEP03D95A: NV-HD620EG/EGH/EC) (VEP03D95B: NV-HD620B/BL)

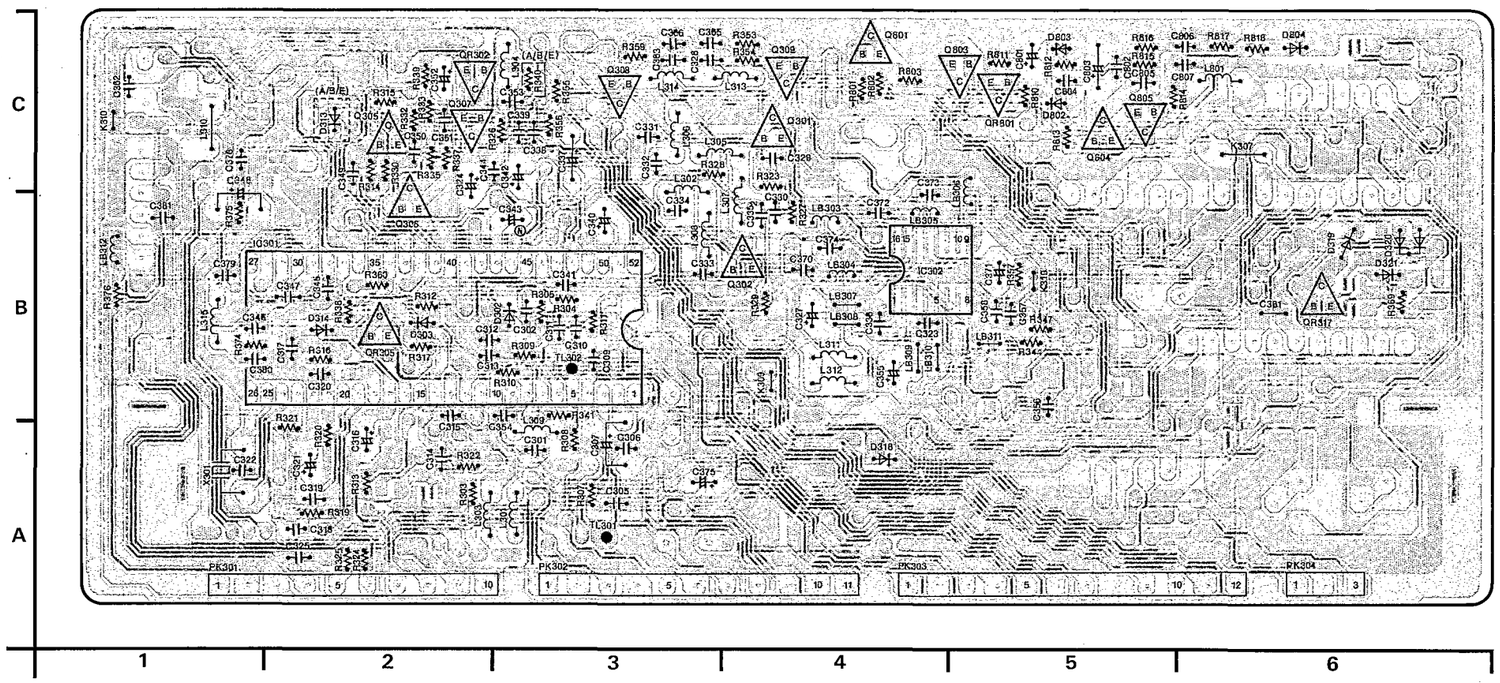

LUMINANCE & CHROMINANCE PACK C.B.A.			
Transistor		**Integrated Circuit**	
Q301	C-4	IC301	B-2
Q302	B-4	IC302	B-4
Q305	C-2	**Test Point**	
Q306	B-2	TL301	A-3
Q307	C-2	TL302	B-3
Q308	C-3	**Connector**	
Q309	C-4	PK301	A-2
Q801	C-4	PK302	A-3
Q803	C-5	PK303	A-5
Q804	C-5	PK304	A-6
Q805	C-5		
Transistor & Resistor			
QR302	C-2		
QR305	B-2		
QR317	B-6		
QR801	C-5		

ADDRESS INFORMATION

TIMER C.B.A.	
Transistor & Resistor	
QR7506	B-12
Integrated Circuit	
IC7501	A-11
IC7502	A-3
IC7503	B-9
Test Point	
TL7501	B-8
TW7501	B-6
TW7502	A-6
TW7503	A-5
TW7504	C-4
TW7505	A-12
TW7507	B-3
TW7508	C-3
TW7513	A-1
Adjustment	
VC7501	A-11
Connector	
PP7501	B-12
PS7501	A-4
PS7502	A-12

ADDRESS INFORMATION

3-27. TIMER C.B.A. (VEP07957A: NV-HD620EG/EGH) (VEP07957B: NV-HD620B/BL) (VEP07957C: NV-HD620EC)

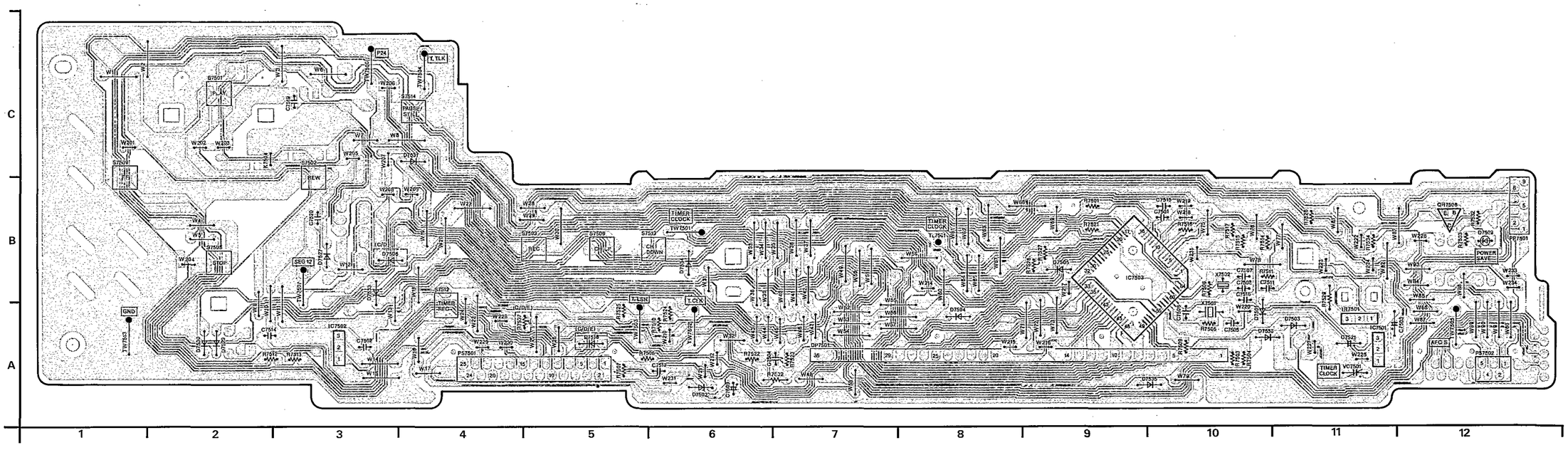

3-28. Hi-Fi AUDIO PACK C.B.A. (VEP04664A)

Hi-Fi AUDIO PACK C.B.A.	
Transistor	
Q4501	B-3
Q4551	A-3
Integrated Circuit	
IC4501	B-2
Test Point	
TL4515	B-1
TL4516	A-2
TL4519	A-1
Adjustment	
VR4501	B-1
VR4509	A-3
VR4550	A-2
Connector	
PK4501	A-1
PK4502	A-2
PL4503	A-3

ADDRESS INFORMATION

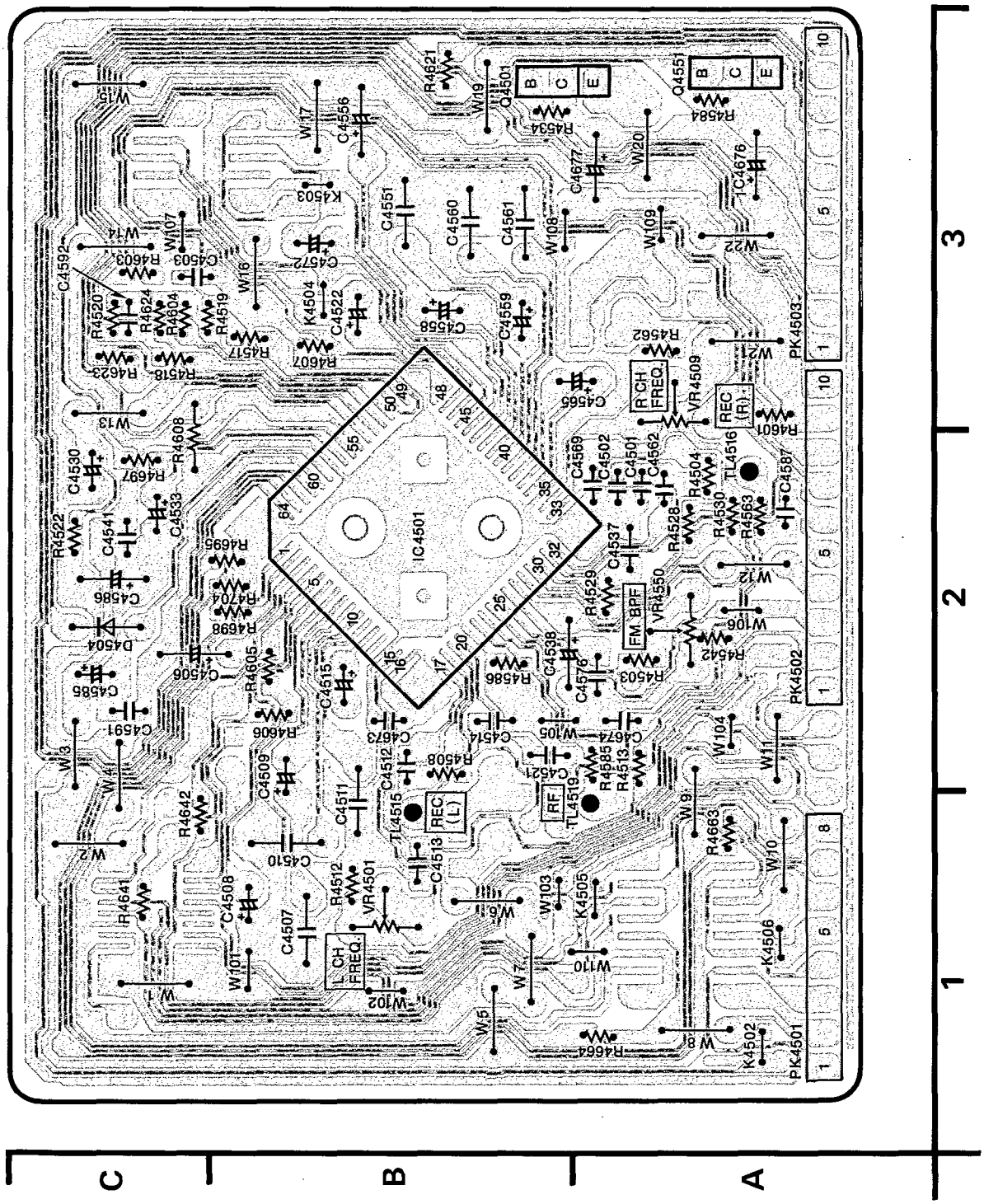

3-29. INPUT/OUTPUT PACK C.B.A. (VEP03D96A)

INPUT/OUTPUT PACK C.B.A.

Transistor		Integrated Circuit		Test Point		Connector	
Q3901	B-5	IC3902	C-2	TP3002	C-5	PS3901	A-6
Q3902	C-5	IC3903	B-1	TP3003	C-6	PS3902	A-5
Q3903	B-5	IC3906	A-1	TP3901	C-5	PS3903	A-3
Q3904	C-5	IC4901	C-3	TP4503	C-4	PS3904	A-1
Q3909	A-5	IC4902	C-6	TP4504	C-4		
Transistor & Resistor		IC4903	A-2	TP4505	C-5		
QR3901	A-5	IC4904	C-3	TP4506	C-4		
QR3903	A-3						
QR3904	A-3						

ADDRESS INFORMATION

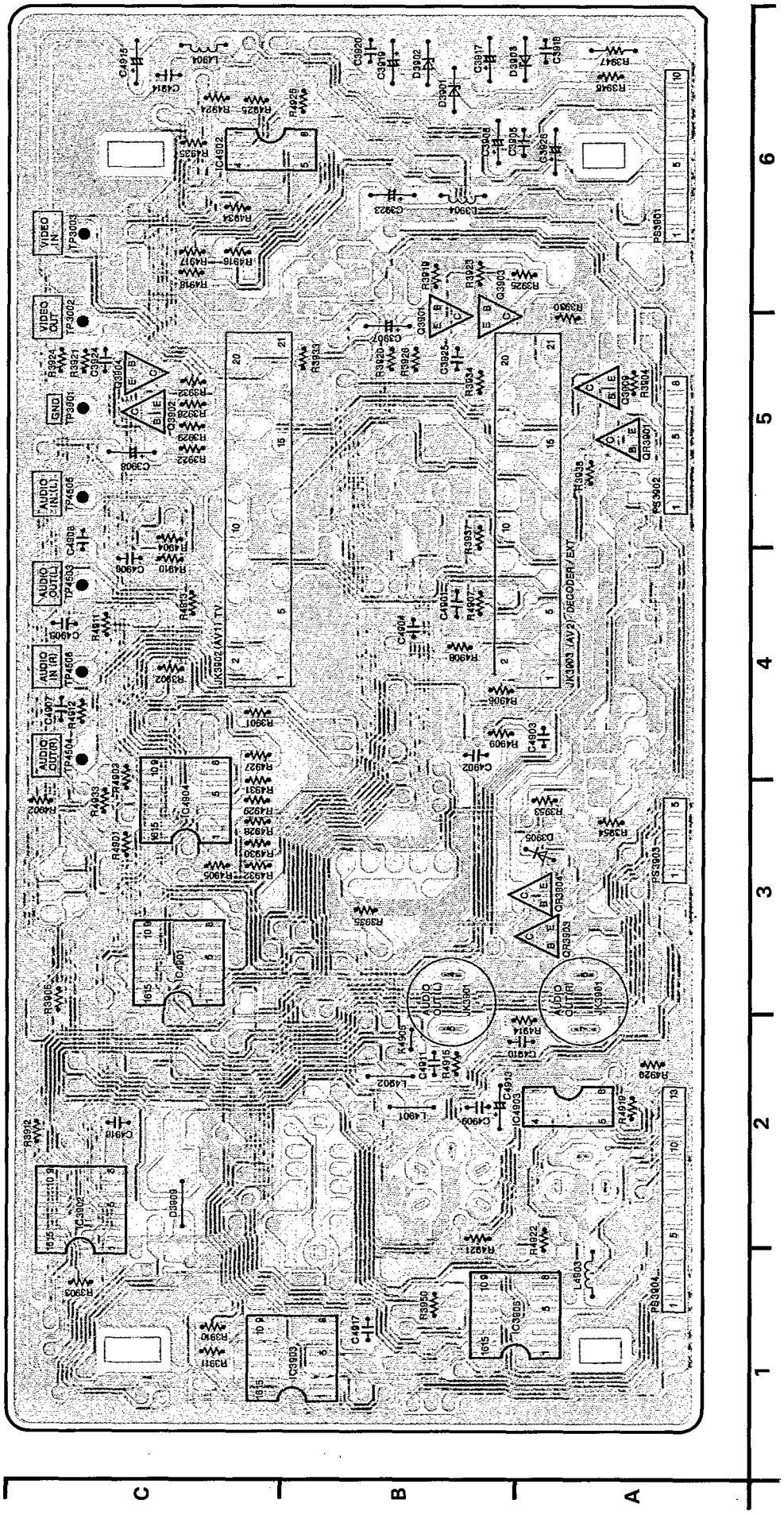

3-30. HEAD AMP C.B.A. (VEP05349A)

HEAD AMP C.B.A.	
Transistor	
Q503	B-1
Q504	B-1
Transistor & Resistor	
QR501	B-1
QR502	B-2
Integrated Circuit	
IC501	A-3
Test Point	
TP507	A-3
TP508	A-3
TP4502	A-1
Connector	
P501	A-2
P502	B-3

ADDRESS INFORMATION

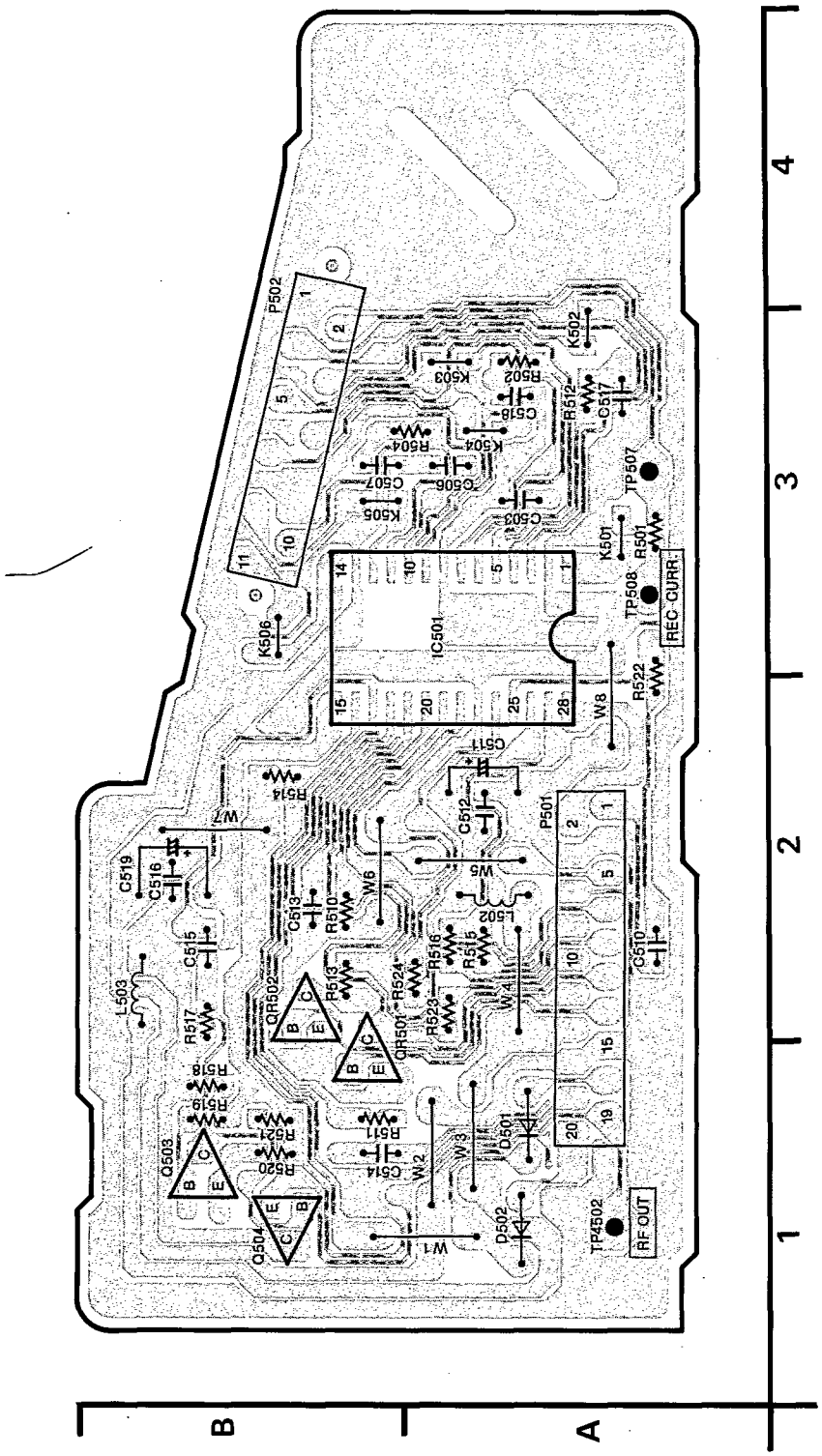

3-31. OPERATION C.B.A. (VEP06B98A)

OPERATION C.B.A.	
Connector	
PS6501	B-1

ADDRESS INFORMATION

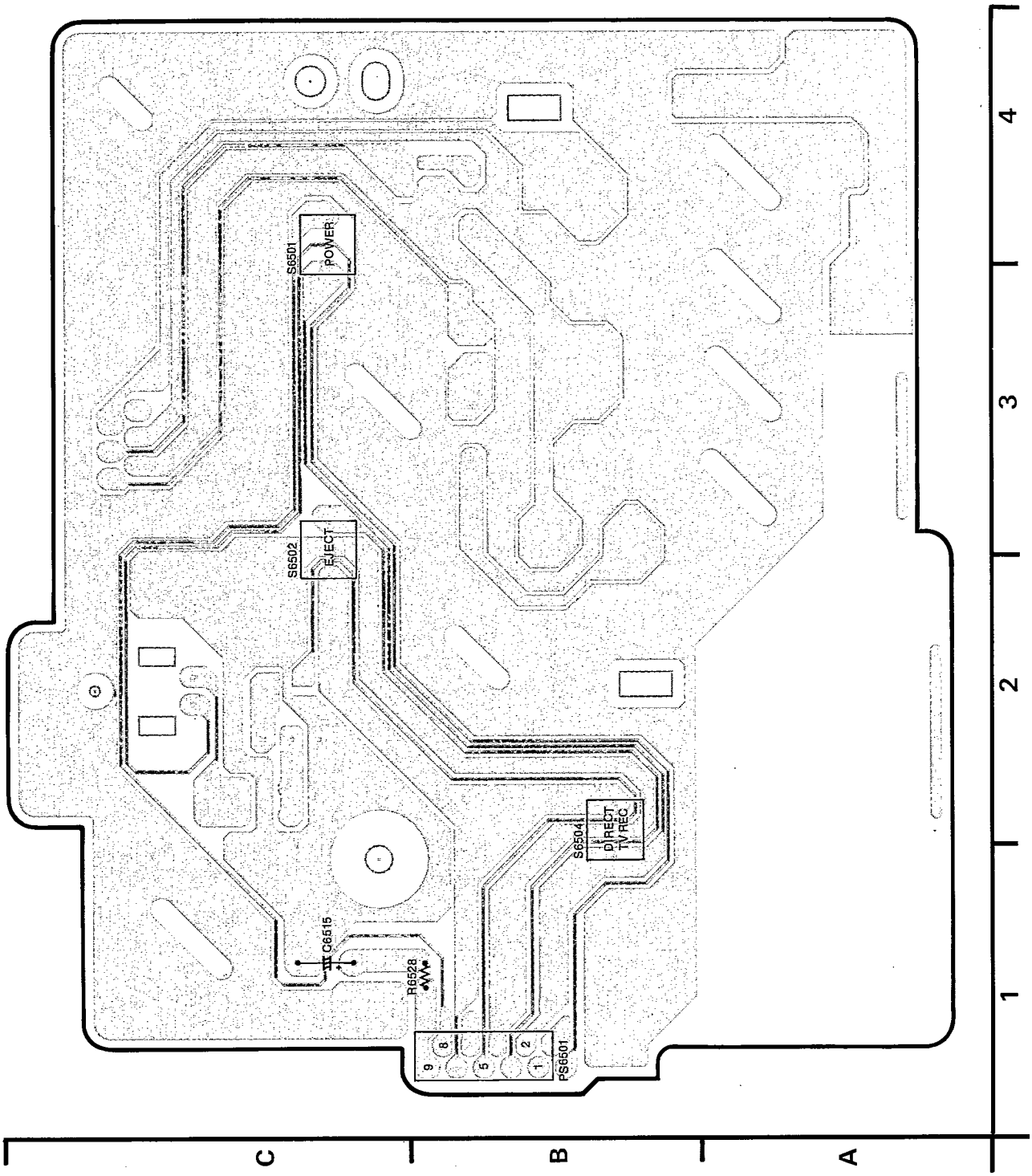

3-32. NICAM DECODER PACK C.B.A. (VEP07787Q: NV-HD620B/BL) (VEP07787P: NV-HD620EC)

NICAM DECODER PACK C.B.A.			
Transistor		IC7303	B-1
Q7301	B-5	IC7304	B-6
Q7302	B-5	IC7305	B-7
Q7304	A-5	IC7306	B-6
Q7305	C-7	**Test Point**	
Q7308	B-6	TL7301	B-6
Q7309	B-6	TL7302	C-6
Q7310	A-2	**Connector**	
Q7311	A-1	PK7301	A-3
Q7312	A-1	PK7301	A-5
Q7313	A-1	PK7302	A-2
Transistor & Resistor		PK7302	A-6
QR7301	A-6		
QR7302	A-2		
Integrated Circuit			
IC7301	C-2		
IC7302	B-6		

ADDRESS INFORMATION

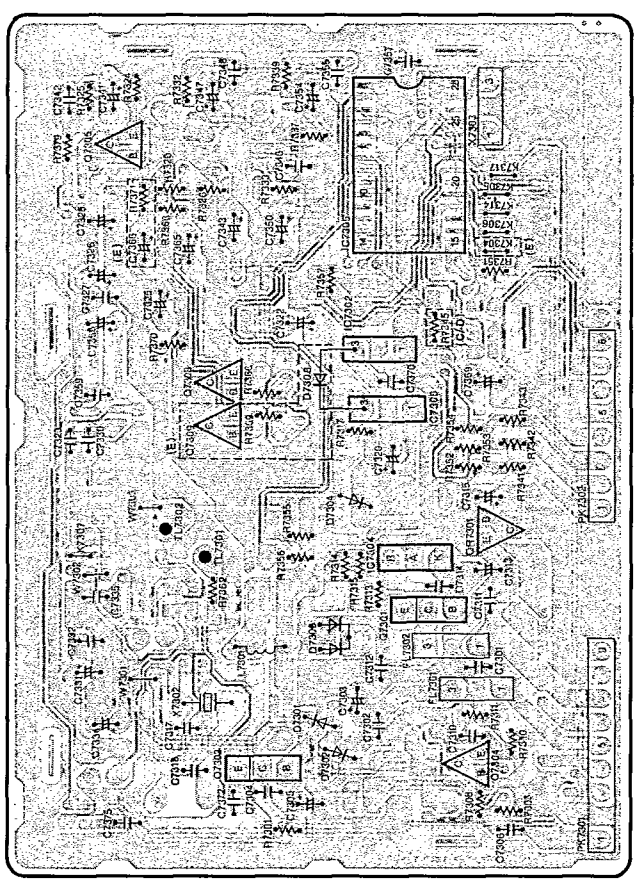

(FOIL SIDE)

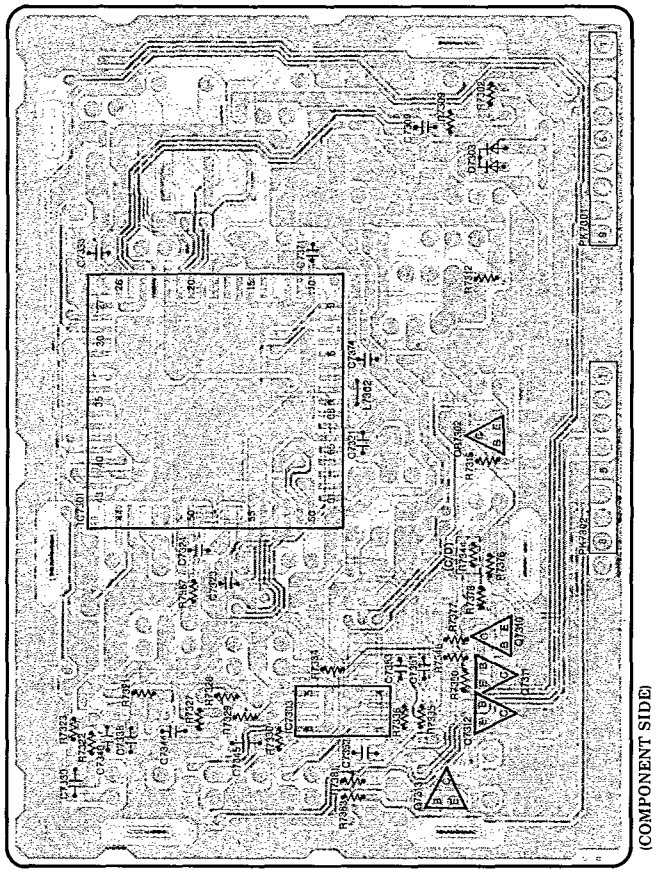

(COMPONENT SIDE)

3-33. DECODER PACK C.B.A. (VEP07784E: NV-HD620EG/EGH)

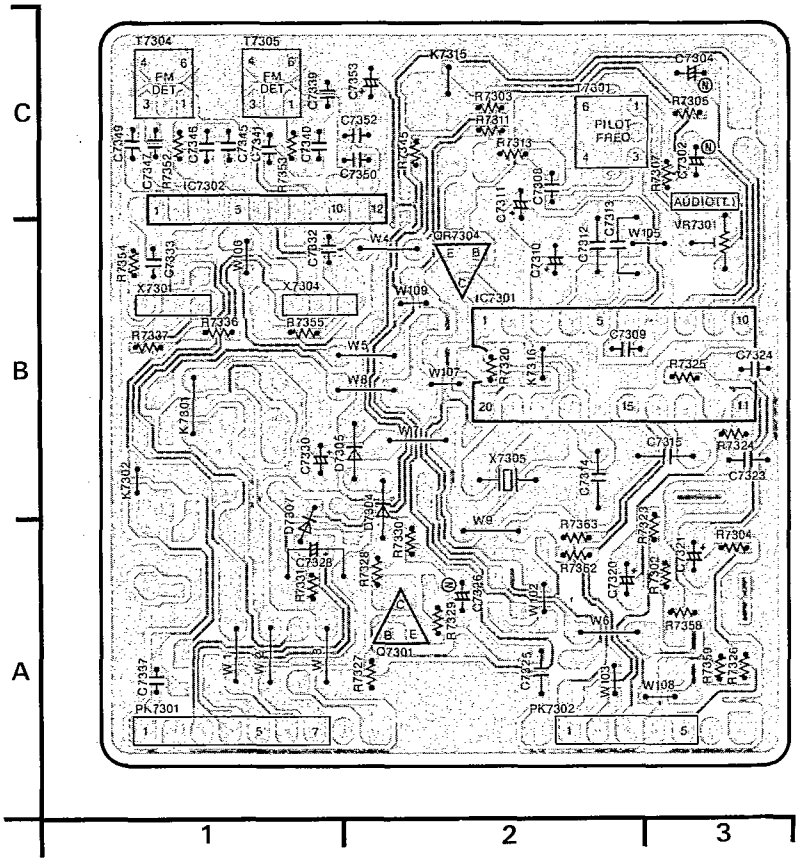

DECODER PACK C.B.A.	
Transistor	
Q7301	A-2
Transistor & Resistor	
QR7304	B-2
Integrated Circuit	
IC7301 IC7302	B-3 C-1
Adjustment	
T7301 T7304 T7305 VR7301	C-2 C-1 C-1 B-3
Connector	
PK7301 PK7302	A-1 A-2

ADDRESS INFORMATION

3-34. TV DEMODULATOR PACK C.B.A. (VEP07801AC: NV-HD620EG/EGH/EC) (VEP07801AD: NV-HD620B) (VEP07801AG: NV-HD620BL)

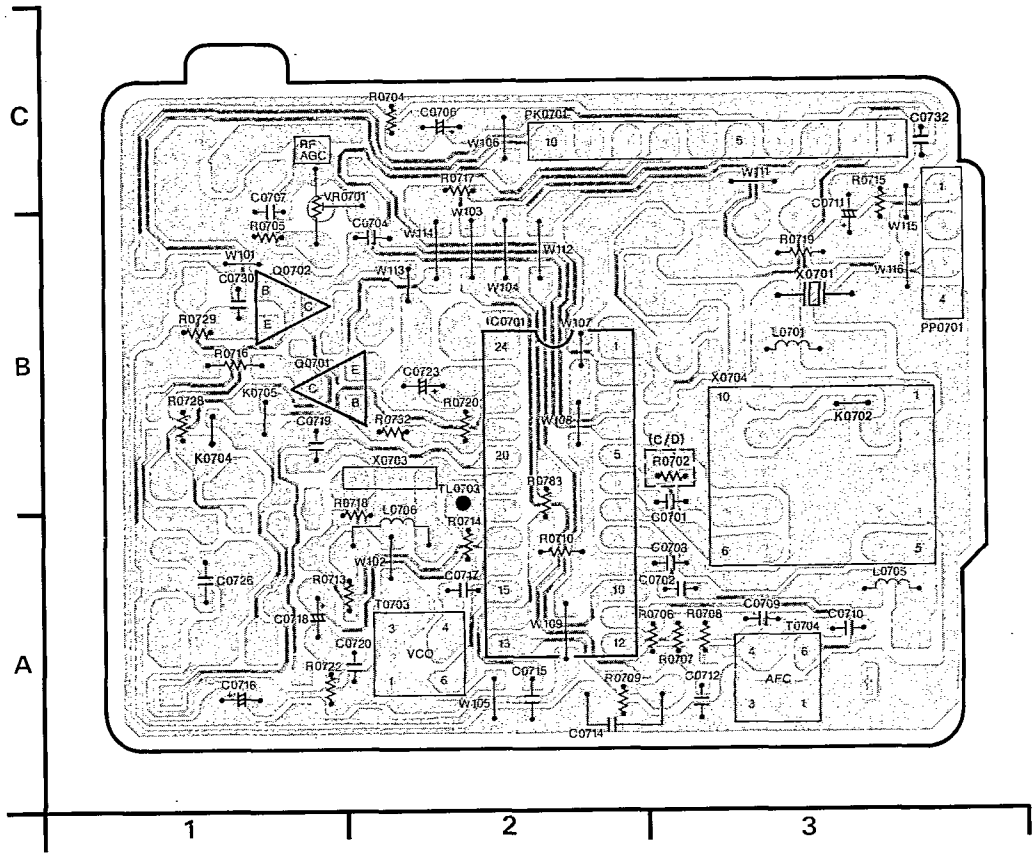

TV DEMODULATOR PACK C.B.A.	
Transistor	
Q0701 Q0702	B-1 B-1
Integrated Circuit	
IC0701	B-2
Test Point	
TL0703	B-2
Adjustment	
T0703 T0704 VR0701	A-2 A-3 C-1
Connector	
PK0701 PP0701	C-2 C-3

ADDRESS INFORMATION

SECTION 4
EXPLODED VIEWS & PARTS LIST

4-1. EXPLODED VIEW & MECHANICAL REPLACEMENT PARTS LIST

❶ CHASSIS PARTS SECTION (1)

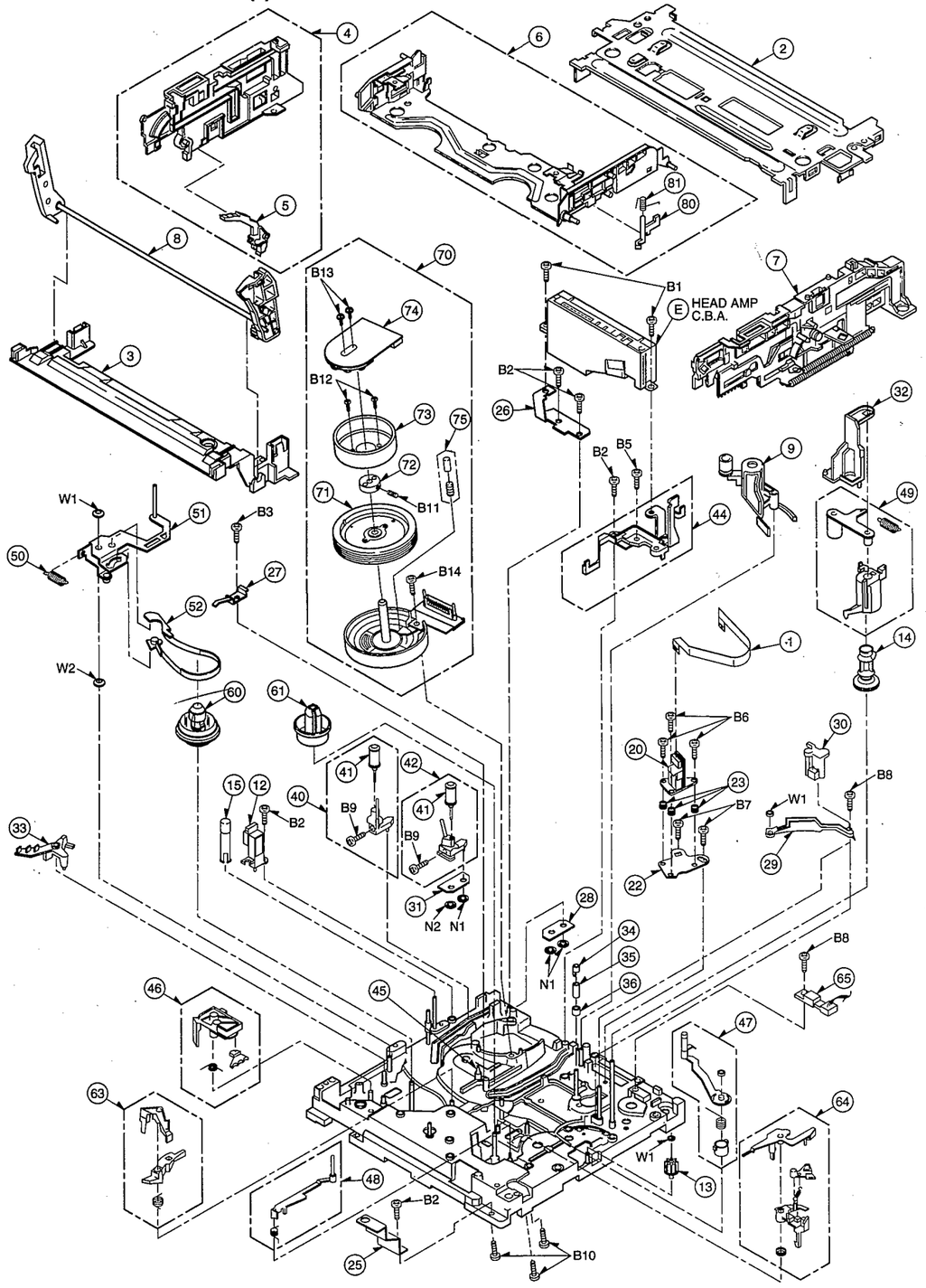

Note: 1. * Be sure to make your orders of replacement parts according to this list.
2. IMPORTANT SAFETY NOTICE
Components identified with the mark ⚠ have the special characteristics for safety. When replacing any of these components, use only the same type.

Ref.No.	Part No.	Part Name & Description	Pcs	Remarks
1 (1)	VWJ0743	FLEXIBLE CABLE (6P)	1	P4002-A/C HEAD
2 (1)	VMA8644	TOP PLATE	1	
3 (1)	VMA8787	CASSETTE GUIDE	1	
4 (1)	VXA4660	SIDE PLATE (L) UNIT	1	
5 (1)	VXL2250	OPENER LEVER UNIT	1	
6 (1)	VXA4661	CASSETTE HOLDER PLATE UNIT	1	
7 (1)	VXA4806	SIDE PLATE (R) UNIT	1	
8 (1)	VXP1339	MAIN SHAFT UNIT	1	
9 (1)	VXL2440	CLEANER ARM UNIT	1	
12 (1)	VBS0052	FE HEAD	1	
13 (1)	VDG0871	CARRIAGE CONNECTION GEAR	1	
14 (1)	VDG0886	PINCH CAM GEAR	1	
15 ,(1)	VXP1402	IMPEDANCE ROLLER UNIT	1	
20 (1)	VED0217	A/C HEAD (1) UNIT	1	
22 (1)	VMA8624	A/C HEAD BASE	1	
23 (1)	VMB2515	A/C HEAD SPRING	3	
25 (1)	VMA8761	MOUNT ANGLE	1	
26 (1)	VMA9158	HEAD AMP MOUNT ANGLE (L)	1	
27 (1)	VMC0917	EARTH SPRING	1	
28 (1)	VMA8874	INCLIND BASE HOLDER (S)	1	
29 (1)	VMD2078	P5 STOPPER BASE	1	
30 (1)	VXA4927	P5 POST STOPPER	1	
31 (1)	VMA8873	INCLIND BASE HOLDER (T)	1	
32 (1)	VMD2101	OPENER PIECE	1	
33 (1)	VML2776	TENSION SPRING ARM	1	
34 (1)	VMX1544	P4 UPPER LIMITER	1	
35 (1)	VMX2175	P4 SLEEVE	1	
36 (1)	VMX2176	P4 LOWER LIMITER	1	
40 (1)	VXA5245KIT	INCLINED BASE (S) UNIT	1	OR VXA4982KIT
41 (1)	VXP1826	ROLLER POST	2	
42 (1)	VXA5247KIT	INCLINED BASE (T) UNIT	1	OR VXA4984KIT
44 (1)	VXA4974	HEAD AMP MOUNT ANGLE (R) U.	1	
45 (1)	VMS5383	CASSETTE POSITION FIXTURE	1	
46 (1)	VXL2310	REVIEW ARM UNIT	1	
47 (1)	VXL2306	P5 ARM UNIT	1	
48 (1)	VXL2394	TAKE UP TENSION REG.ARM U	1	
49 (1)	VXL2246	PINCH ARM UNIT	1	
50 (1)	VMB2434	TENSION SPRING	1	
51 (1)	VXL2309	TENSION ARM (1) UNIT	1	
52 (1)	VXZ0310	TENSION BAND UNIT	1	
60 (1)	VXR0221	SUPPLY REEL TABLE UNIT	1	
61 (1)	VXR0237	TAKE UP REEL TABLE UNIT	1	
63 (1)	VXZ0312	SUPPLY BRAKE ARM UNIT	1	
64 (1)	VXZ0313	TAKE UP BRAKE ARM UNIT	1	
65 (1)	2SB1370YD01E	POWER TRANSISTOR	1	
70 (1)	VEG1411	CYLINDER UNIT	1	[SUPPLIED FROM MBV]
71 (1)	VEH0844	UPPER CYLINDER UNIT	1	[SUPPLIED FROM MBV]
72 (1)	VDB1256	CYLINDER RETAINER	1	
73 (1)	VXP1823	CYLINDER ROTOR UNIT	1	
74 (1)	VEK7236	CYLINDER STATOR UNIT	1	
75 (1)	VXS0135	EARTH BRUSH UNIT	1	
80 (1)	VML2680	RELEASE LEVER	1	
81 (1)	VMB2013	RELEASE SPRING	1	
B1 (1)	VHD0773	SCREW	2	
B2 (1)	XTV26+6F	SCREW	5	
B3 (1)	XTV26+4F	SCREW	1	
B5 (1)	XTV26+10F	SCREW	1	
B6 (1)	VHD0762	SCREW	3	
B7 (1)	XTV26+6FZ	SCREW	2	
B8 (1)	XTV26+8F	SCREW	2	
B9 (1)	XQN2+AJ4	SCREW	2	
B10 (1)	VHD0342	SCREW	3	
B11 (1)	VHD0842	SCREW	1	
B12 (1)	VHD0843	SCREW	2	
B13 (1)	VHD0844	SCREW	2	
B14 (1)	XYN26+C5	SCREW	1	
N1 (1)	VHN0192	NUT	3	
N2 (1)	VHN0193	NUT	1	
W1 (1)	VMX2208	WASHER	3	
W2 (1)	XWGV26D5G	WASHER	1	

❷ CHASSIS PARTS SECTION (2)

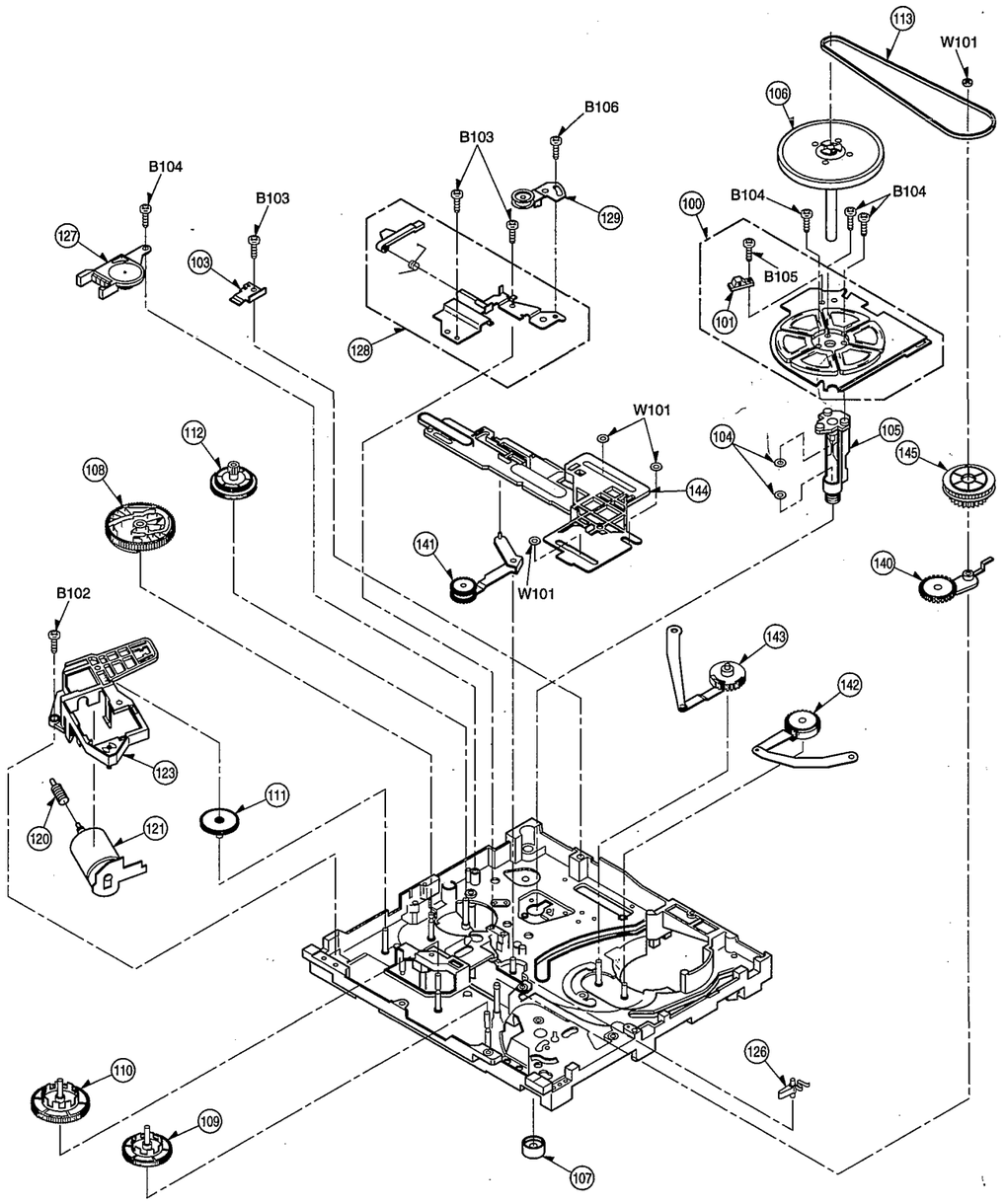

Note: 1. * Be sure to make your orders of replacement parts according to this list.
2. IMPORTANT SAFETY NOTICE
Components Identified with the mark ⚠ have the special characteristics for safety. When replacing any of these components, use only the same type.

Ref. No.	Part No.	Part Name & Description	Pcs	Remarks
100 (2)	VEK5927	CAPSTAN STATOR UNIT	1	
101 (2)	VBK0061	FG HEAD	1	
103 (2)	VMA8930	ROTOR STOPPER	1	
104 (2)	VMX1927	OIL SEAL	2	
105 (2)	VXD0140	HOUSING UNIT	1	
106 (2)	VXP1519	CAPSTAN ROTOR UNIT	1	
107 (2)	VXQ0297	THRUST SCREW UNIT	1	
108 (2)	VDG0913	MAIN CAM GEAR	1	
109 (2)	VDG0956	SUPPLY REEL GEAR	1	
110 (2)	VDG0957	TAKE UP REEL GEAR	1	
111 (2)	VDG0868	WORM WHEEL GEAR	1	
112 (2)	VDG0885	SUB CAM GEAR	1	
113 (2)	VDV0235	TIMING BELT	1	
120 (2)	VDG0866	WORM GEAR	1	
121 (2)	VEM0427	LOADING MOTOR (1) UNIT	1	
123 (2)	VMD1942	MOTOR BRACKET	1	
126 (2)	VML2725	IDLER CONTROL LEVER	1	
127 (2)	VSS0365	MODE SW	1	
128 (2)	VXA5138	SS BRAKE BASE UNIT	1	
129 (2)	VXA4799	TENSION ROLLER UNIT	1	
140 (2)	VXL2378	IDLER ARM UNIT	1	
141 (2)	VXL2372	DIRECT LEVER UNIT	1	
142 (2)	VXL2299	SUPPLY LOADING ARM UNIT	1	
143 (2)	VXL2300	TAKE UP LOADING ARM UNIT	1	
144 (2)	VXL2307	MAIN LEVER UNIT	1	
145 (2)	VXP1409	CENTRE CLUTCH	1	
B102 (2)	XTV26+8F	SCREW	1	
B103 (2)	XTV26+6F	SCREW	3	
B104 (2)	VHD0753	SCREW	4	
B105 (2)	VHD0754	SCREW	1	
B106 (2)	XSB26+4FZ	SCREW	1	
W101 (2)	VMX2208	WASHER	4	

Note: 1. * Be sure to make your orders of replacement parts according to this list.
2. IMPORTANT SAFETY NOTICE
Components Identified with the mark ⚠ have the special characteristics for safety. When replacing any of these components, use only the same type.

Ref. No.	Part No.	Part Name & Description	Pcs	Remarks
200 (3)	VGM1150	TOP PANEL	1	
201 (3)	VYP6432	FRONT PANEL UNIT	1	[SUPPLIED FROM MBV]
				NV-HD620EG/EGH
201 (3)	VYP6434	FRONT PANEL UNIT	1	[SUPPLIED FROM MBV]
				NV-HD620B/BL
201 (3)	VYP6433	FRONT PANEL UNIT	1	[SUPPLIED FROM MBV]
				NV-HD620EG
202 (3)	VKF2709	BLINDER PANEL	1	[SUPPLIED FROM MBV]
203 (3)	VMB2521	BLINDER SPRING	1	
205 (3)	VMT0502	BLINDER CUSHION	1	
206 (3)	VKA0191	LEG	2	
207 (3)	VKA0122	FOOT	2	
210 (3)	VKU0412	BOTTOM PLATE	1	
211 (3)	VJH0979	ANTENNA JACK PLATE	1	[SUPPLIED FROM MBV]
212 (3)	VMC1213	ANTENNA EARTH SPRING	1	
214 (3)	VMC1065	EARTH SPRING	1	
218 (3)	VMX2233	C.B.A. SPACER	1	
219 (3)	VJP3673A005G	BRIDGE CONNECTOR (5P)	1	PS3001-PS7502
220 (3)	VJP3673A025G	BRIDGE CONNECTOR (25P)	1	PS6002-PS7501
221 (3)	VWJ1158	FLAT CARD CABLE (20P)	1	[SUPPLIED FROM MBV]
				P501-P3002
223 (3)	VWJ1102	FLAT CARD CABLE (15P)	1	[SUPPLIED FROM MBV]
				P2002-CAPSTAN
224 (3)	VWJ1105	FLAT CARD CABLE (9P)	1	[SUPPLIED FROM MBV]
				P2005-CYLINDER
225 (3)	VEE9223	WIRE CABLE	1	P2003-POWER TR.
227 (3)	VEE9776	WIRE CABLE	1	[SUPPLIED FROM MBV]
				P4003-FE HEAD
B201 (3)	XTW3+10TFZ	SCREW	4	
B204 (3)	VHD0773	SCREW	2	
B205 (3)	VHD0168	SCREW	3	
B206 (3)	VHD0874	SCREW	1	
B207 (3)	XTV26+8FR	SCREW	3	
B208 (3)	XTV26+10F	SCREW	1	
B209 (3)	XTV3+8GFZ	SCREW	4	

❸ CASING PARTS SECTION

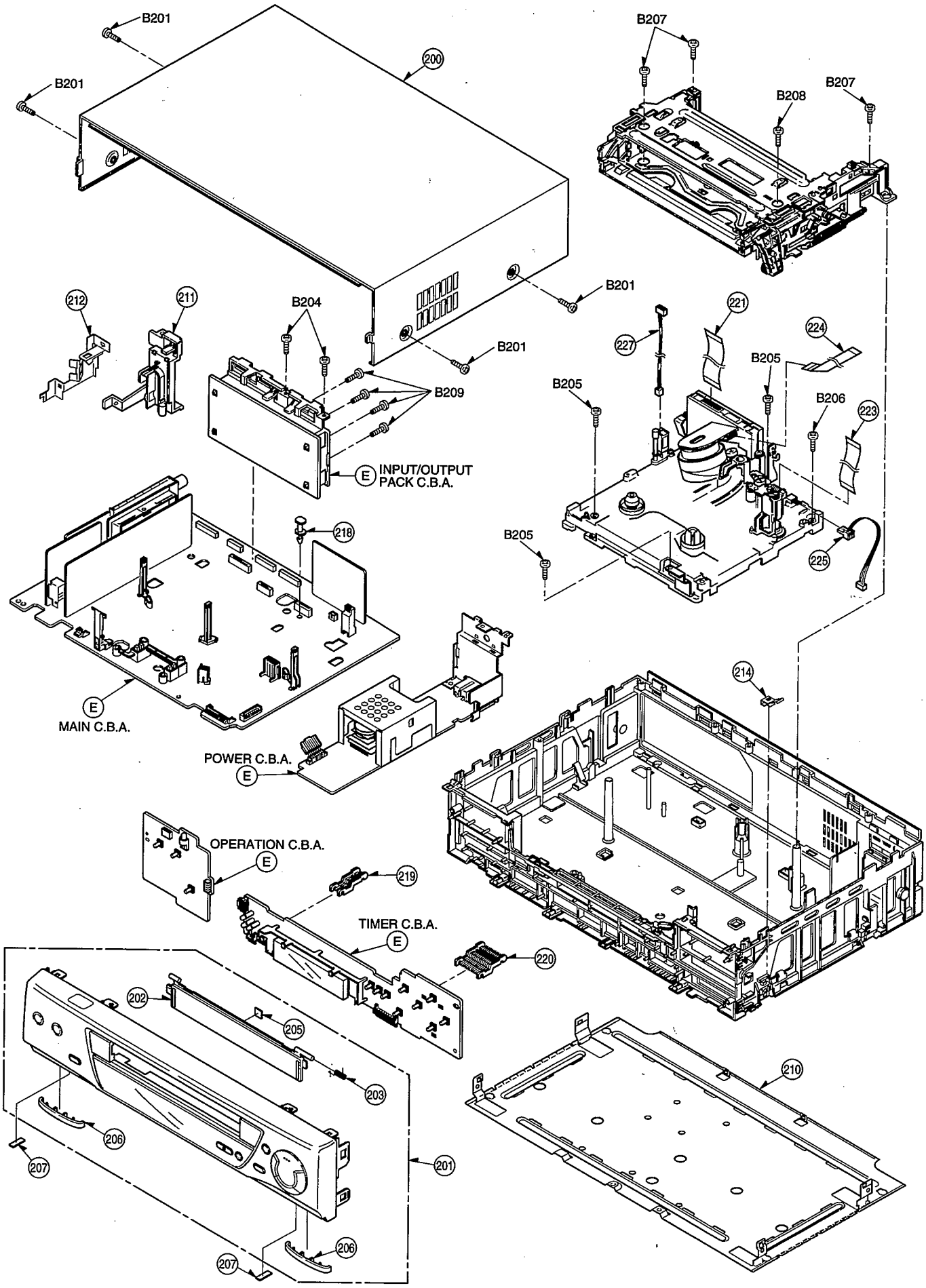

❹ PACKING PARTS SECTION

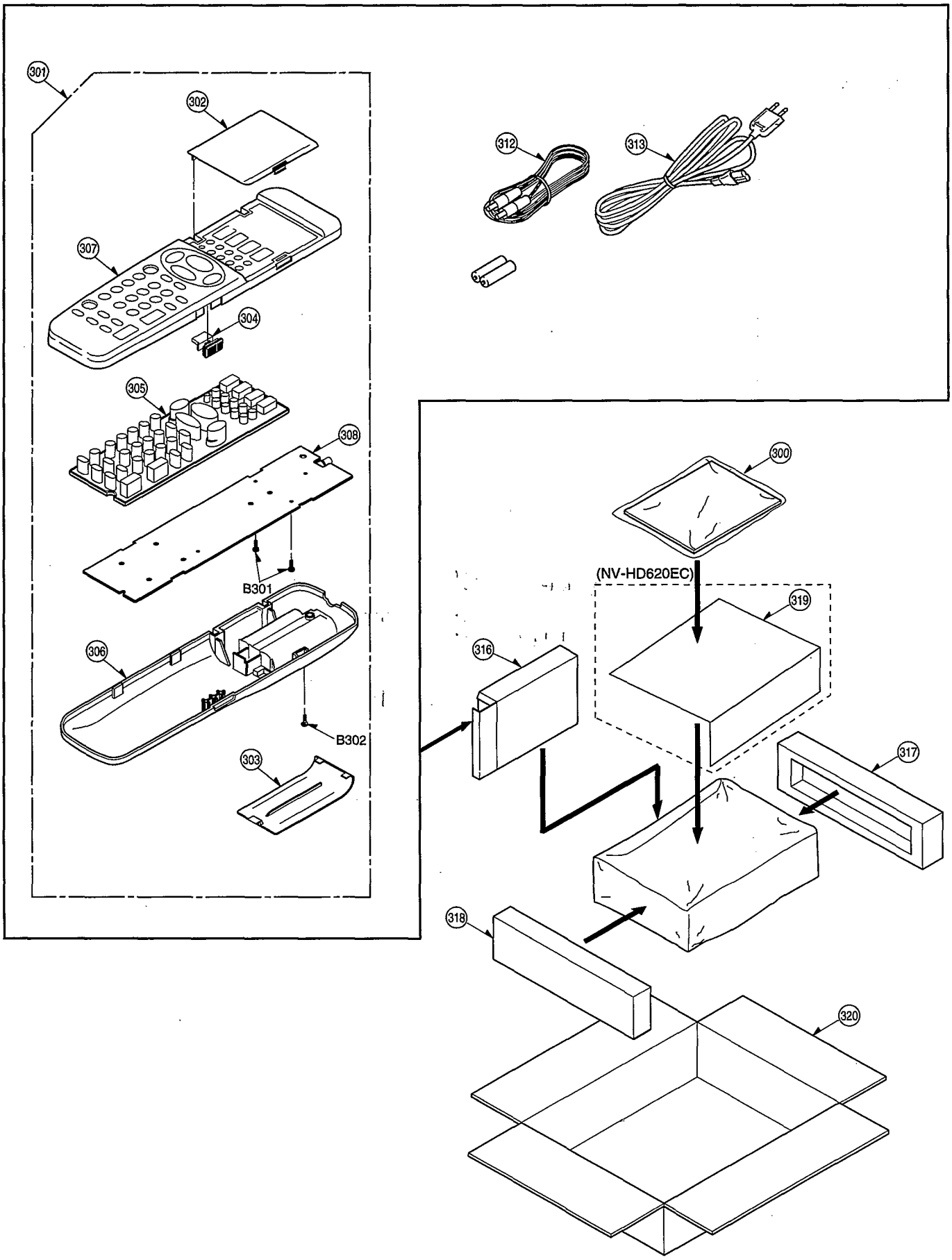

Note: 1. * Be sure to make your orders of replacement parts according to this list.
2. IMPORTANT SAFETY NOTICE
Components identified with the mark ⚠ have the special characteristics for safety. When replacing any of these components, use only the same type.

Ref. No.	Part No.	Part Name & Description	Pcs	Remarks
⚠ 300 (4)	VQT6906	OPERATING INSTRUCTIONS	1	[SUPPLIED FROM MBV]
		(ENGLISH/ITALIAN)		NV-HD620EG
⚠ 300 (4)	VQT6907	OPERATING INSTRUCTIONS	1	[SUPPLIED FROM MBV]
		(DUTCH)		NV-HD620EG/EGH/EC
⚠ 300 (4)	VQT6908	OPERATING INSTRUCTIONS	1	[SUPPLIED FROM MBV]
		(GERMAN/FRENCH)		NV-HD620EG/EC
⚠ 300 (4)	VQT6911	OPERATING INSTRUCTIONS	1	[SUPPLIED FROM MBV]
		(ENGLISH)		NV-HD620B/BL
⚠ 300 (4)	VQT6909	OPERATING INSTRUCTIONS	1	[SUPPLIED FROM MBV]
		(SPANISH/PORTUGUESE)		NV-HD620EG
⚠ 300 (4)	VQT6910	OPERATING INSTRUCTIONS	1	[SUPPLIED FROM MBV]
		(SWEDISH/DANISH/FINNISH)		NV-HD620EG
301 (4)	VEQ1956	REMOTE CONTROLLER	1	[SUPPLIED FROM MBV]
				NV-HD620EG/EGH/EC
301 (4)	VEQ1958	REMOTE CONTROLLER	1	[SUPPLIED FROM MBV]
				NV-HD620B/BL
302 (4)	VGP4395	DOOR PANEL	1	
303 (4)	VKF2670	BATTERY COVER	1	
304 (4)	VGU7307	SWITCH KNOB	1	
305 (4)	VSP1039	RUBBER CONTACT	1	[SUPPLIED FROM MBV]
306 (4)	VYK7176	BOTTOM COVER UNIT	1	
307 (4)	VYK7616	TOP COVER UNIT	1	[SUPPLIED FROM MBV]
				NV-HD620EG/EGH/EC
307 (4)	VYK7618	TOP COVER UNIT	1	[SUPPLIED FROM MBV]
				NV-HD620B/BL
308 (4)	————	REMOTE CONTROLLER C.B.A.	1	THE C.B.A. IS NOT
				SUPPLIED AS SPARE PART
312 (4)	VJA0963	DIN RF CABLE	1	
⚠ 313 (4)	VJA0664	AC CORD	1	NV-HD620EG/EGH/EC
⚠ 313 (4)	VJA0733	AC CORD	1	NV-HD620B/BL
316 (4)	VPK0825	ACCESSORIES PACKING	1	
317 (4)	VPN4449	CUSHION (R)	1	[SUPPLIED FROM MBV]
318 (4)	VPN4450	CUSHION (L)	1	[SUPPLIED FROM MBV]
319 (4)	VPN4460	PAD	1	NV-HD620EG
320 (4)	VPG8870	PACKING	1	[SUPPLIED FROM MBV]
B301 (4)	XTB2+6G	SCREW	2	
B302 (4)	XTB2+8GFZ	SCREW	1	
		SERVICE FIXTURES & TOOLS		
	VFJ8125H3F	VHS ALIGNMENT TAPE (PAL)	1	
	VFK0335	RETAINING RING REMOVER	1	
		(3MM/4MM)		
	VFK0329	POST ADJUSTMENT SCREWDRIVER	1	
	VFK0326	HEX WRENCH SET	1	
	VFK0132	BACK TENSION METER	1	
	VFK27	HEAD CLEANING STICK	1	
	VFK1024	MORLYTONE GREASE	1	
	VFK0680	WHITE GREASE	1	
	VFK0851	CENTRE FIXING TOOL	1	
	VFK0330	FINE ADJUSTMENT GEAR DRIVER	1	
	VFK1140	11P EXTENSION CABLE	1	

Ref. No.	Part No.	Part Name & Description	Pcs	Remarks

4-2. ELECTRICAL REPLACEMENT PARTS LIST

Note: 1. Be sure to make your orders of replacement parts according to this list.
2. IMPORTANT SAFETY NOTICE : Components identified with the mark ⚠ have the special characteristics for safety. When replacing any of these components, use only the same type.
3. Unless otherwise specified,
All resistors are in OHMS, K=1,000 OHMS. All capacitors are in MICROFARADS(uf), P=uuF.
4. The P.C. Board units marked width "▮" show below the main assembled parts.
5. The marking (RTL) indicaters the retention time is limited for this item.
After the discontinuation of this assembly in production, it will no longer be available.

Ref. No.	Part No.	Part Name & Description	Pcs	Remarks
■	VEP06B97A	MAIN C.B.A.	1	[SUPPLIED FROM MBV]
		(Page:4-9)		(RTL)
				NV-HD620EG/EG H
				THE FOLLOWING C.B.A.S ARE
				INCLUDED IN MAIN C.B.A.
				VEP03D95A
				VEP04664A
				VEP07784E
				VEP07801AC
■	VEP03D95A	LUMINANCE &	1	[SUPPLIED FROM MBV]
		CHROMINANCE PACK C.B.A.		(RTL)
				INCLUDED IN MAIN
				C.B.A. (VEP06B97A).
■	VEP04664A	HI-FI AUDIO PACK C.B.A.	1	[SUPPLIED FROM MBV]
				(RTL)
				INCLUDED IN MAIN
				C.B.A. (VEP06B97A).
■	VEP07784E	DECODER PACK C.B.A.	1	[SUPPLIED FROM MBV]
				(RTL)
				INCLUDED IN MAIN
				C.B.A. (VEP06B97A).
■	VEP07801AC	TV DEMODULATOR C.B.A.	1	[SUPPLIED FROM MBV]
				(RTL)
				INCLUDED IN MAIN
				C.B.A. (VEP06B97A).
■	VEP06B97B	MAIN C.B.A.	1	[SUPPLIED FROM MBV]
		(Page:4-15)		(RTL)
				NV-HD620B
				THE FOLLOWING C.B.A.S ARE
				INCLUDED IN MAIN C.B.A.
				VEP03D95B
				VEP04664A
				VEP07787Q
				VEP07801AD
■	VEP03D95B	LUMINANCE &	1	[SUPPLIED FROM MBV]
		CHROMINANCE PACK C.B.A.		(RTL)
				INCLUDED IN MAIN
				C.B.A. (VEP06B97B).
■	VEP04664A	HI-FI AUDIO PACK C.B.A.	1	[SUPPLIED FROM MBV]
				(RTL)
				INCLUDED IN MAIN
				C.B.A. (VEP06B97B).
■	VEP07787Q	NICAM DECODER C.B.A.	1	[SUPPLIED FROM MBV]
				(RTL)
				INCLUDED IN MAIN
				C.B.A. (VEP06B97B).
■	VEP07801AD	TV DEMODULATOR C.B.A.	1	[SUPPLIED FROM MBV]
				(RTL)
				INCLUDED IN MAIN
				C.B.A. (VEP06B97B).
■	VEP06B97C	MAIN C.B.A.	1	[SUPPLIED FROM MBV]
		(Page:4-22)		(RTL)
				NV-HD620BL
				THE FOLLOWING C.B.A.S ARE
				INCLUDED IN MAIN C.B.A.
				VEP03D95B
				VEP04664A
				VEP07787Q
				VEP07801AG
■	VEP03D95B	LUMINANCE &	1	[SUPPLIED FROM MBV]
		CHROMINANCE PACK C.B.A.		(RTL)
				INCLUDED IN MAIN
				C.B.A. (VEP06B97C).
■	VEP04664A	HI-FI AUDIO PACK C.B.A.	1	[SUPPLIED FROM MBV]
				(RTL)
				INCLUDED IN MAIN
				C.B.A. (VEP06B97C).
■	VEP07787Q	NICAM DECODER C.B.A.	1	[SUPPLIED FROM MBV]
				(RTL)
				INCLUDED IN MAIN
				C.B.A. (VEP06B97C).
■	VEP07801AG	TV DEMODULATOR C.B.A.	1	[SUPPLIED FROM MBV]
				(RTL)
				INCLUDED IN MAIN
				C.B.A. (VEP06B97C).
■	VEP06B97D	MAIN C.B.A.	1	[SUPPLIED FROM MBV]
		(Page:4-28)		(RTL)
				NV-HD620EC
				THE FOLLOWING C.B.A.S ARE
				INCLUDED IN MAIN C.B.A.
				VEP03D95A
				VEP04664A
				VEP07787P
				VEP07801AC
■	VEP03D95A	LUMINANCE &	1	[SUPPLIED FROM MBV]
		CHROMINANCE PACK C.B.A.		(RTL)
				INCLUDED IN MAIN
				C.B.A. (VEP06B97D).
■	VEP04664A	HI-FI AUDIO PACK C.B.A.	1	[SUPPLIED FROM MBV]
				(RTL)
				INCLUDED IN MAIN
				C.B.A. (VEP06B97D).
■	VEP07787P	NICAM DECODER C.B.A.	1	[SUPPLIED FROM MBV]
				(RTL)
				INCLUDED IN MAIN
				C.B.A. (VEP06B97D).
■	VEP07801AC	TV DEMODULATOR C.B.A.	1	[SUPPLIED FROM MBV]
				(RTL)
				INCLUDED IN MAIN
				C.B.A. (VEP06B97D).
■	VEP03D96A	INPUT/OUTPUT C.B.A.	1	[SUPPLIED FROM MBV]
		(Page:4-35)		(RTL)
■	VEP05349A	HEAD AMP C.B.A.	1	[SUPPLIED FROM MBV]
		(Page:4-36)		(RTL)
■	VEP07957A	TIMER C.B.A.	1	[SUPPLIED FROM MBV]
		(Page:4-36)		(RTL)
				NV-HD620EG/EG H
■	VEP07957B	TIMER C.B.A.	1	[SUPPLIED FROM MBV]
		(Page:4-37)		(RTL)
				NV-HD620B/BL
■	VEP07957C	TIMER C.B.A.	1	[SUPPLIED FROM MBV]
		(Page:4-37)		(RTL)
				NV-HD620EC
■	VEP06B98A	AV FRONT C.B.A.	1	[SUPPLIED FROM MBV]
		(Page:4-38)		(RTL)

Ref. No.	Part No.	Part Name & Description	Pcs	Remarks
⚠ ■	VEP01763C	SWITCH POWER C.B.A.	1	[SUPPLIED FROM MBV]
		(Page:4-38)		(RTL)
■	————	CYLINDER STATOR C.B.A.	1	C.B.A. IS INCLUDED IN
		(Page:4-39)		CYLINDER STATOR UNIT
				(VEK7236).
■	————	MOTOR C.B.A.	1	C.B.A. IS INCLUDED IN
		(Page:4-39)		LOADING MOTOR (1) UNIT
				(VEM0427).
⚠ TU7601	ENG47259G1	TUNER	1	[SUPPLIED FROM MBV]
				NV-HD620EG/EG H/EC
⚠ TU7601	ENG47258G1	TUNER		[SUPPLIED FROM MBV]
				NV-HD620B
⚠ TU7601	ENG47264G1	TUNER	1	[SUPPLIED FROM MBV]
				NV-HD620BL
⚠ F1101	VSF0231G16	FUSE	1	[SUPPLIED FROM MBV]
■	VEP06B97A	MAIN C.B.A.		[SUPPLIED FROM MBV]
				(RTL)
				NV-HD620EG/EG H
C301	ECUX1H101JCV	C.CAPACITOR CH 50V 100P	1	
C302	ECUX1H820JCV	C.CAPACITOR CH 50V 82P	1	
C305	ECUX1H102GCV	C.CAPACITOR CH 50V 1000P	1	[SUPPLIED FROM MBV]
C306	ECUX1H103ZFV	C.CAPACITOR CH 50V 0.01U	1	
C307	ECEA1EKA4R7	E.CAPACITOR 25V 4.7U	1	
C309	ECUX1H330JCV	C.CAPACITOR CH 50V 33P	1	
C310	ECUX1E223KBV	C.CAPACITOR CH 25V 0.022U	1	
C311	ECUM1E104KBN	C.CAPACITOR CH 25V 0.1U	1	
C312	ECUX1H680JCV	C.CAPACITOR CH 50V 68P	1	
C313	ECUX1H681GCV	C.CAPACITOR CH 50V 680P	1	[SUPPLIED FROM MBV]
C314	ECUM1H104ZFN	C.CAPACITOR CH 50V 0.1U	1	
C315	ECUX1H103ZFV	C.CAPACITOR CH 50V 0.01U	1	
C316	ECEA1HKA010	E.CAPACITOR 50V 1U	1	
C317	ECUX1C104KBV	C.CAPACITOR CH 16V 0.1U	1	
C318	ECUX1C104ZFV	C.CAPACITOR CH 16V 0.1U	1	
C319	ECUX1H222KBV	C.CAPACITOR CH 50V 2200P	1	
C320	ECUX1C333KBV	C.CAPACITOR CH 16V 0.033U	1	
C321	ECEA1HKA010	E.CAPACITOR 50V 1U	1	
C322	ECUX1H270JCV	C.CAPACITOR CH 50V 27P	1	
C323	ECUX1C104ZFV	C.CAPACITOR CH 16V 0.1U	1	
C324	ECEA0JKA101	E.CAPACITOR 6.3V 100U	1	
C325	ECUX1H103ZFV	C.CAPACITOR CH 50V 0.01U	1	
C327	ECEA0JKA101	E.CAPACITOR 6.3V 100U	1	
C328	ECUX1H080DCV	C.CAPACITOR CH 50V 8P	1	
C329	ECUX1H101JCV	C.CAPACITOR CH 50V 100P	1	
C330	ECUX1H330JCV	C.CAPACITOR CH 50V 33P	1	
C331	ECUX1H820JCV	C.CAPACITOR CH 50V 82P	1	
C332	ECUX1H681JCV	C.CAPACITOR CH 50V 680P	1	
C333	ECUX1H060DCV	C.CAPACITOR CH 50V 6P	1	
C334	ECUX1H100DCV	C.CAPACITOR CH 50V 10P	1	
C335	ECUX1H120JCV	C.CAPACITOR CH 50V 12P	1	
C336	ECUX1C104ZFV	C.CAPACITOR CH 16V 0.1U	1	
C337	ECEA1CKA100	E.CAPACITOR 16V 10U	1	
C338	ECUX1C104ZFV	C.CAPACITOR CH 16V 0.1U	1	
C339	ECUX1H470JCV	C.CAPACITOR CH 50V 47P	1	
C340	ECEA1CKA100	E.CAPACITOR 16V 10U	1	
C341	ECUX1E223KBV	C.CAPACITOR CH 25V 0.022U	1	
C342	ECEA1EKA4R7	E.CAPACITOR 25V 4.7U	1	
C343	ECEA1EKN4R7	E.CAPACITOR 25V 4.7U	1	
C344	ECUX1C104ZFV	C.CAPACITOR CH 16V 0.1U	1	
C345,46	ECUX1H103ZFV	C.CAPACITOR CH 50V 0.01U	2	
C347	ECUM1H104ZFN	C.CAPACITOR CH 50V 0.1U	1	
C348	ECEA1CKA101	E.CAPACITOR 16V 100U	1	
C349	ECUX1C104ZFV	C.CAPACITOR CH 16V 0.1U	1	
C350	ECUX1H152KBV	C.CAPACITOR CH 50V 1500P	1	
C351	ECUX1H392KBV	C.CAPACITOR CH 50V 3900P	1	

Ref. No.	Part No.	Part Name & Description	Pcs	Remarks
C352	ECEA0JKA470	E.CAPACITOR 6.3V 47U	1	
C353	ECUX1H221JCV	C.CAPACITOR CH 50V 220P	1	
C354	ECUX1H470JCV	C.CAPACITOR CH 50V 47P	1	
C355	ECEA0JKA221	E.CAPACITOR 6.3V 220U	1	
C356	ECUX1H103ZFV	C.CAPACITOR CH 50V 0.01U	1	
C357	ECUX1H103KBV	C.CAPACITOR CH 50V 0.01U	1	
C358	ECUX1H472KBV	C.CAPACITOR CH 50V 4700P	1	
C361	ERJ6GEY0R00	M.RESISTOR CH 1/10W 0	1	
C362	ECUX1H103ZFV	C.CAPACITOR CH 50V 0.01U	1	
C363	ECUX1H270JCV	C.CAPACITOR CH 50V 27P	1	
C365,66	ECUX1H101JCV	C.CAPACITOR CH 50V 100P	2	
C370	ECUX1C104ZFV	C.CAPACITOR CH 16V 0.1U	1	
C371	ECEA1HKA0R1	E.CAPACITOR 50V 0.1U	1	
C372,73	ECUX1C104ZFV	C.CAPACITOR CH 16V 0.1U	2	
C374	ECUX1H103ZFV	C.CAPACITOR CH 50V 0.01U	1	
C375	ECEA0JKA470	E.CAPACITOR 6.3V 47U	1	
C378	ECUX1H103ZFV	C.CAPACITOR CH 50V 0.01U	1	
C379,80	ECUX1H330JCV	C.CAPACITOR CH 50V 33P	2	
C381	ECUX1H820JCV	C.CAPACITOR CH 50V 82P	1	
C0701,02	ECUX1H103ZFV	C.CAPACITOR CH 50V 0.01U	2	
C0704	ECUX1H331JCV	C.CAPACITOR CH 50V 330P	1	
C0706	ECEA1HKA0R1	E.CAPACITOR 50V 0.1U	1	
C0707,08	ECUX1H103ZFV	C.CAPACITOR CH 50V 0.01U	2	
C0709	ECUX1H120JCV	C.CAPACITOR CH 50V 12P	1	
C0710	ECUX1H470JPV	C.CAPACITOR CH 50V 47P	1	
C0711	ECEA1CKA100	E.CAPACITOR 16V 10U	1	
C0712	ECUX1H103ZFV	C.CAPACITOR CH 50V 0.01U	1	
C0714	ECQB1H473JF	P.CAPACITOR 50V 0.047U	1	
C0715	ECUM1H103ZFN	C.CAPACITOR CH 50V 0.01U	1	
C0716	ECEA1CKA470	E.CAPACITOR 16V 47U	1	
C0717	ECUX1H270JPV	C.CAPACITOR CH 50V 27P	1	
C0718	ECEA1HKSR47	E.CAPACITOR 50V 0.47U	1	
C0719	ECUX1H120JCV	C.CAPACITOR CH 50V 12P	1	
C0720	ECUX1H103ZFV	C.CAPACITOR CH 50V 0.01U	1	
C0723	ECEA1HKA0R1	E.CAPACITOR 50V 0.1U	1	
C0726	ECUX1H103ZFV	C.CAPACITOR CH 50V 0.01U	1	
C0730	ECUX1H103ZFV	C.CAPACITOR CH 50V 0.01U	1	
C0732	ECUX1H103ZFV	C.CAPACITOR CH 50V 0.01U	1	
C801	ECEA1CKA100	E.CAPACITOR 16V 10U	1	
C802	ECUX1H103ZFV	C.CAPACITOR CH 50V 0.01U	1	
C803	ECEA0JKA470	E.CAPACITOR 6.3V 47U	1	
C804	ECUX1H103ZFV	C.CAPACITOR CH 50V 0.01U	1	
C805	ECUX1H050CCV	C.CAPACITOR CH 50V 5P	1	
C806	ECUX1C104ZFV	C.CAPACITOR CH 16V 0.1U	1	
C807	ECUX1H103ZFV	C.CAPACITOR CH 50V 0.01U	1	
C1001	ECEA1CGE101	E.CAPACITOR 16V 100U	1	
C1002	ECUM1H103ZFN	C.CAPACITOR CH 50V 0.01U	1	
C1003	ECEA1CGE470	E.CAPACITOR 16V 47U	1	
C1004	ECUM1H103ZFN	C.CAPACITOR CH 50V 0.01U	1	
C1005	ECEA0JKG220	E.CAPACITOR 6.3V 22U	1	
C1006	ECUM1H103ZFN	C.CAPACITOR CH 50V 0.01U	1	
C1007	ECEA0JKG101	E.CAPACITOR 6.3V 100U	1	
C1008	ECUM1H103ZFN	C.CAPACITOR CH 50V 0.01U	1	
C1009	ECEA1AKG220	E.CAPACITOR 10V 22U	1	[SUPPLIED FROM MBV]
C1010	ECEA0JKG101	E.CAPACITOR 6.3V 100U	1	
C1011	ECUM1H103ZFN	C.CAPACITOR CH 50V 0.01U	1	
C1012	ECEA0JKG101	E.CAPACITOR 6.3V 100U	1	
C1013	ECEA0JKG220	E.CAPACITOR 6.3V 22U	1	
C2001	ECUM1H104ZFN	C.CAPACITOR CH 50V 0.1U	1	
C2002,03	ECUM1H102KBN	C.CAPACITOR CH 50V 1000P	2	
C2004	ECUM1H223KBN	C.CAPACITOR CH 50V 0.022U	1	
C2005	ECUM1H104ZFN	C.CAPACITOR CH 50V 0.1U	1	
C2006	ECUM1H392KBN	C.CAPACITOR CH 50V 3900P	1	
C2007	ECUM1H472KBN	C.CAPACITOR CH 50V 4700P	1	
C2008	ECQV1H683JM	P.CAPACITOR 50V 0.068U	1	
C2009	ECEA0JKA221	E.CAPACITOR 6.3V 220U	1	
C2010	ECUM1H471JCN	C.CAPACITOR CH 50V 470P	1	
C2011	ECEA0JKA221	E.CAPACITOR 6.3V 220U	1	
C2012	ECEA1CKA100	E.CAPACITOR 16V 10U	1	
C2013	ECUM1H222KBN	C.CAPACITOR CH 50V 2200P	1	
C2014	ECUM1H103ZFN	C.CAPACITOR CH 50V 0.01U	1	
C2015	ECEA0JKA470	E.CAPACITOR 6.3V 47U	1	
C2016,17	ECEA1EKN3R3	E.CAPACITOR 25V 3.3U	2	
C2018	ECEA1EKA4R7	E.CAPACITOR 25V 4.7U	1	
C2019,20	ECUM1H102KBN	C.CAPACITOR CH 50V 1000P	2	

Ref.No.	Part No.	Part Name & Description	Pcs	Remarks
C2021, 22	ECUM1C105ZFN	C. CAPACITOR CH 16V 1U	2	
C2023	ECUM1H222KBN	C. CAPACITOR CH 50V 2200P	1	
C2024, 25	ECEA1HKA2R2	E. CAPACITOR 50V 2.2U	2	
C2026	ECEA1HKNR22	E. CAPACITOR 50V 0.22U	1	
C2027	ECA1EM470	E. CAPACITOR 25V 47U	1	
C2028	ECEA1HKA010	E. CAPACITOR 50V 1U	1	
C2029	ECA1EM470	E. CAPACITOR 25V 47U	1	
C2030, 31	ECUM1H333KBN	C. CAPACITOR CH 50V 0.033U	2	
C2032	ECUM1H103ZFN	C. CAPACITOR CH 50V 0.01U	1	
C2033	ECA0JM221	E. CAPACITOR 6.3V 220U	1	
C2035	ECUM1H333KBN	C. CAPACITOR CH 50V 0.033U	1	
C2036	ECQV1H683JM	P. CAPACITOR 50V 0.068U	1	
C2037	ECUM1H104ZFN	C. CAPACITOR CH 50V 0.1U	1	
C2038-40	ECUM1H333KBN	C. CAPACITOR CH 50V 0.033U	3	
C2041, 42	ECUM1H680JCN	C. CAPACITOR CH 50V 68P	2	
C2043, 44	ECUM1C474ZFN	C. CAPACITOR CH 16V 0.47U	2	
C2045	ECUM1H103ZFN	C. CAPACITOR CH 50V 0.01U	1	
C2046	ECEA1HKA2R2	E. CAPACITOR 50V 2.2U	1	
C2047-49	ECEA1VKN4R7	E. CAPACITOR 35V 4.7U	3	
C2050	ECUM1H473ZFN	C. CAPACITOR CH 50V 0.047U	1	
C2051	ECEA0JKG101	E. CAPACITOR 6.3V 100U	1	
C2052	ECQV1H683JM	P. CAPACITOR 50V 0.068U	1	
C2053	ECEA1HKAR47	E. CAPACITOR 50V 0.47U	1	
C2054	ECUM1H101JCN	C. CAPACITOR CH 50V 100P	1	
C2055	ECEA0JKA470	E. CAPACITOR 6.3V 47U	1	
C2056	ECQV1H104JM	P. CAPACITOR 50V 0.1U	1	
C2057, 58	ECEA1HKG0R1	E. CAPACITOR 50V 0.1U	2	
C2059	ECEA1HKA0R1	E. CAPACITOR 50V 0.1U	1	
C2061	ECUM1H104ZFN	C. CAPACITOR CH 50V 0.1U	1	
C3001	ECUM1H620JCN	C. CAPACITOR CH 50V 62P	1	
C3002	ECUM1H181JCN	C. CAPACITOR CH 50V 180P	1	
C3003	ECUM1H220JCN	C. CAPACITOR CH 50V 22P	1	
C3004	ECUM1H103ZFN	C. CAPACITOR CH 50V 0.01U	1	
C3006	ECUM1H103ZFN	C. CAPACITOR CH 50V 0.01U	1	
C3007	ECEA0JKA221	E. CAPACITOR 6.3V 220U	1	
C3008	ECUM1H102KBN	C. CAPACITOR CH 50V 1000P	1	
C3009	ECUM1H103ZFN	C. CAPACITOR CH 50V 0.01U	1	
C3010	ECUM1C105ZFN	C. CAPACITOR CH 16V 1U	1	
C3017, 18	ECUM1H103ZFN	C. CAPACITOR CH 50V 0.01U	2	
C3019	ECUM1H620JCN	C. CAPACITOR CH 50V 62P	1	
C3021	ECUM1H104ZFN	C. CAPACITOR CH 50V 0.1U	1	
C3023	ECEA1CKA470	E. CAPACITOR 16V 47U	1	
C3024	ECUM1E333KBN	C. CAPACITOR CH 25V 0.033U	1	
C3027	ECEA0JKA470	E. CAPACITOR 6.3V 47U	1	
C3028	ECUM1H151JCN	C. CAPACITOR CH 50V 150P	1	
C3029	ECUM1H220JCN	C. CAPACITOR CH 50V 22P	1	
C3031	ECUM1H220JCN	C. CAPACITOR CH 50V 22P	1	
C3032	ECUM1H681JCN	C. CAPACITOR CH 50V 680P	1	
C3033	ECUM1H330JCN	C. CAPACITOR CH 50V 33P	1	
C3055	ECUM1H103ZFN	C. CAPACITOR CH 50V 0.01U	1	
C3057	ECUM1H180JCN	C. CAPACITOR CH 50V 18P	1	
C3061	ECUM1H104ZFN	C. CAPACITOR CH 50V 0.1U	1	
C3062	ECEA0JKA470	E. CAPACITOR 6.3V 47U	1	
C3064	ERJ6GMZ0R00	M. RESISTOR CH 1/10W 0	1	
C3065	ECUM1H104ZFN	C. CAPACITOR CH 50V 0.1U	1	
C3066	ECUM1H151JCN	C. CAPACITOR CH 50V 150P	1	
C4004	ECEA1CKA100	E. CAPACITOR 16V 10U	1	
C4005	ECCD2H181J	C. CAPACITOR 500V 180P	1	
C4006	ECEA1CKA330	E. CAPACITOR 16V 33U	1	
C4007	ECUM1H153KBN	C. CAPACITOR CH 50V 0.015U	1	
C4009	ECEA1CKA100	E. CAPACITOR 16V 10U	1	
C4010	ECUM1H104ZFN	C. CAPACITOR CH 50V 0.1U	1	
C4011	ECQP1362JZ	P. CAPACITOR 100V 3600P	1	[SUPPLIED FROM MBV]
C4017	ECUM1H102JCN	C. CAPACITOR CH 50V 1000P	1	
C4018-20	ECEA1HKA0R1	E. CAPACITOR 50V 0.1U	3	
C4021, 22	ECUM1H153KBN	C. CAPACITOR CH 50V 0.015U	2	
C4023	ECUM1C105ZFN	C. CAPACITOR CH 16V 1U	1	
C4024	ECUM1H272KBN	C. CAPACITOR CH 50V 2700P	1	
C4025, 26	ECEA1CKA220	E. CAPACITOR 16V 22U	2	
C4027	ECEA1HKS3R3	E. CAPACITOR 50V 3.3U	1	
C4028	ECEA1CKA470	E. CAPACITOR 16V 47U	1	
C4029, 30	ECUM1H102JCN	C. CAPACITOR CH 50V 1000P	2	
C4031	ECEA1AKA101	E. CAPACITOR 10V 100U	1	
C4032	ECUM1H822KBN	C. CAPACITOR CH 50V 8200P	1	
C4033, 34	ECUM1H471JCN	C. CAPACITOR CH 50V 470P	2	

Ref.No.	Part No.	Part Name & Description	Pcs	Remarks
C4038	ECUM1H103ZFN	C. CAPACITOR CH 50V 0.01U	1	
C4039	ECUM1H220JCN	C. CAPACITOR CH 50V 22P	1	
C4040	ECUM1H102JCN	C. CAPACITOR CH 50V 1000P	1	
C4042	ECUM1H222JCN	C. CAPACITOR CH 50V 2200P	1	
C4044	ECEA1HKA4R7	E. CAPACITOR 50V 4.7U	1	
C4501	ECUX1H681JCV	C. CAPACITOR CH 50V 680P	1	
C4502	ECUX1H561JCV	C. CAPACITOR CH 50V 560P	1	
C4503	ECUX1H102KBV	C. CAPACITOR CH 50V 1000P	1	
C4506	ECA1CAK100X	E. CAPACITOR 16V 10U	1	[SUPPLIED FROM MBV]
C4507	ECQB1H223JF	P. CAPACITOR 50V 0.022U	1	
C4508	ECA1HAK4R7X	E. CAPACITOR 50V 4.7U	1	[SUPPLIED FROM MBV]
C4509	ECA1CAK470X	E. CAPACITOR 16V 47U	1	[SUPPLIED FROM MBV]
C4510	ECQB1H103JF	P. CAPACITOR 50V 0.01U	1	
C4511	ECQB1H332JF	P. CAPACITOR 50V 3300P	1	
C4512	ECUX1H561JCV	C. CAPACITOR CH 50V 560P	1	
C4513	ECUM1H681JCN	C. CAPACITOR CH 50V 680P	1	
C4514	ECUM1H561JCN	C. CAPACITOR CH 50V 560P	1	
C4515	ECA1HAK4R7X	E. CAPACITOR 50V 4.7U	1	[SUPPLIED FROM MBV]
C4521	ECUM1H473KBN	C. CAPACITOR CH 50V 0.047U	1	
C4522	ECA1HAK4R7X	E. CAPACITOR 50V 4.7U	1	[SUPPLIED FROM MBV]
C4530	ECA0JAK470X	E. CAPACITOR 6.3V 47U	1	[SUPPLIED FROM MBV]
C4533	ECA1CAK470X	E. CAPACITOR 16V 47U	1	[SUPPLIED FROM MBV]
C4537	ECUM1H102JCN	C. CAPACITOR CH 50V 1000P	1	
C4538	ECA1HAKR47X	E. CAPACITOR 50V 0.47U	1	[SUPPLIED FROM MBV]
C4541	ECUM1H104ZFN	C. CAPACITOR CH 50V 0.1U	1	
C4551	ECQB1H223JF	P. CAPACITOR 50V 0.022U	1	
C4556	ECA1CAK100X	E. CAPACITOR 16V 10U	1	[SUPPLIED FROM MBV]
C4558	ECA1HAK4R7X	E. CAPACITOR 50V 4.7U	1	[SUPPLIED FROM MBV]
C4559	ECA1CAK470X	E. CAPACITOR 16V 47U	1	[SUPPLIED FROM MBV]
C4560	ECQB1H103JF	P. CAPACITOR 50V 0.01U	1	
C4561	ECQB1H332JF	P. CAPACITOR 50V 3300P	1	
C4562	ECUX1H561JCV	C. CAPACITOR CH 50V 560P	1	
C4565	ECA1HAK4R7X	E. CAPACITOR 50V 4.7U	1	[SUPPLIED FROM MBV]
C4569	ECUX1C104ZFV	C. CAPACITOR CH 16V 0.1U	1	
C4572	ECA1HAK4R7X	E. CAPACITOR 50V 4.7U	1	[SUPPLIED FROM MBV]
C4576	ECUM1H473KBN	C. CAPACITOR CH 50V 0.047U	1	
C4585, 86	ECA0JAK101X	E. CAPACITOR 6.3V 100U	2	[SUPPLIED FROM MBV]
C4587	ECUM1H103ZFN	C. CAPACITOR CH 50V 0.01U	1	
C4591	ECUM1H104ZFN	C. CAPACITOR CH 50V 0.1U	1	
C4592	ECUX1H102KBV	C. CAPACITOR CH 50V 1000P	1	
C4673	ECUX1C104ZFV	C. CAPACITOR CH 16V 0.1U	1	
C4674	ECUM1H104ZFN	C. CAPACITOR CH 50V 0.1U	1	
C4676	ECA1VAK470XQ	E. CAPACITOR 35V 47U	1	[SUPPLIED FROM MBV]
C4677	ECA1CAK470X	E. CAPACITOR 16V 47U	1	[SUPPLIED FROM MBV]
C6001	ECUM1H104ZFN	C. CAPACITOR CH 50V 0.1U	1	
C6002	ECUM1C224ZFN	C. CAPACITOR CH 16V 0.22U	1	
C6003	ECEA1HKA2R2	E. CAPACITOR 50V 2.2U	1	
C6004	ECUM1H103ZFN	C. CAPACITOR CH 50V 0.01U	1	
C6005	ECEA0JKA470	E. CAPACITOR 6.3V 47U	1	
C6006	ECUM1H104ZFN	C. CAPACITOR CH 50V 0.1U	1	
C6007	ECEA0JKA101	E. CAPACITOR 6.3V 100U	1	
C6008	ECUM1H270JCN	C. CAPACITOR CH 50V 27P	1	
C6009	ECUM1H150JCN	C. CAPACITOR CH 50V 15P	1	
C6010	ECUM1H104ZFN	C. CAPACITOR CH 50V 0.1U	1	
C6013, 14	ECUM1H271JCN	C. CAPACITOR CH 50V 270P	2	
C6015	ECEA1CKA100	E. CAPACITOR 16V 10U	1	
C6016	ECUM1H104ZFN	C. CAPACITOR CH 50V 0.1U	1	
C6018	ECUM1H104ZFN	C. CAPACITOR CH 50V 0.1U	1	
C7302	ECEA1HKN2R2	E. CAPACITOR 50V 2.2U	1	
C7304	ECEA1HKN2R2	E. CAPACITOR 50V 2.2U	1	
C7308	ECUM1H181JCN	C. CAPACITOR CH 50V 180P	1	
C7309	ECUM1H152KBN	C. CAPACITOR CH 50V 1500P	1	
C7310	ECEA1CKA100	E. CAPACITOR 16V 10U	1	
C7311	ECEA1CKA101	E. CAPACITOR 16V 100U	1	
C7312	ECQB1H103JZ	P. CAPACITOR 50V 0.01U	1	
C7313	ECQV1H104JM	P. CAPACITOR 50V 0.1U	1	
C7314, 15	ECQB1H103JZ	P. CAPACITOR 50V 0.01U	2	
C7320, 21	ECEA1CKA100	E. CAPACITOR 16V 10U	2	
C7323, 24	ECUM1H153KBM	C. CAPACITOR CH 50V 0.015U	2	
C7325	ECUX1H223KBM	C. CAPACITOR CH 50V 0.022U	1	
C7326	ECEA1CKN100	E. CAPACITOR 16V 10U	1	
C7328	ECEA1CKA470	E. CAPACITOR 16V 47U	1	
C7330	ECEA1CKA100	E. CAPACITOR 16V 10U	1	
C7332, 33	ECUX1H102KBV	C. CAPACITOR CH 50V 1000P	2	
C7337	ECUX1H103ZFV	C. CAPACITOR CH 50V 0.01U	1	

Ref.No.	Part No.	Part Name & Description	Pcs	Remarks
C7339	ECUX1H103ZFV	C. CAPACITOR CH 50V 0.01U	1	
C7340	ECUM1H390JPN	C. CAPACITOR CH 50V 39P	1	
C7341	ECUX1H070DCV	C. CAPACITOR CH 50V 7P	1	
C7345	ECUX1H103ZFV	C. CAPACITOR CH 50V 0.01U	1	
C7346	ECUM1H390JPN	C. CAPACITOR CH 50V 39P	1	
C7347	ECUX1H070DCV	C. CAPACITOR CH 50V 7P	1	
C7349, 50	ECUX1H221JCV	C. CAPACITOR CH 50V 220P	2	
C7352	ECUX1H103ZFV	C. CAPACITOR CH 50V 0.01U	1	
C7353	ECEA1CKA470	E. CAPACITOR 16V 47U	1	
C7601	ECUM1H103ZFN	C. CAPACITOR CH 50V 0.01U	1	
C7604	ECEA0JKA101	E. CAPACITOR 6.3V 100U	1	
C7605	ECUM1H104ZFN	C. CAPACITOR CH 50V 0.1U	1	
C7606	ECEA1CKA101	E. CAPACITOR 16V 100U	1	
C7608	ERJ6GMZ0R00	M. RESISTOR CH 1/10W 0	1	
C7609	ECEA0JKA101	E. CAPACITOR 6.3V 100U	1	
C7610	ECUM1H103ZFN	C. CAPACITOR CH 50V 0.01U	1	
C7612	ECEA0JKA101	E. CAPACITOR 6.3V 100U	1	
C7614	ECEA1HKA100	E. CAPACITOR 50V 10U	1	
C7615	ECEA1HKA010	E. CAPACITOR 50V 1U	1	
C7701	ECUM1H150JCN	C. CAPACITOR CH 50V 15P	1	
C7702	ECUM1H080DCN	C. CAPACITOR CH 50V 8P	1	
C7706	ECUM1H103ZFN	C. CAPACITOR CH 50V 0.01U	1	
C7708-10	ECUM1H104ZFN	C. CAPACITOR CH 50V 0.1U	3	
C7712	ECEA0JKA470	E. CAPACITOR 6.3V 47U	1	
C7713	ECEA1EKA4R7	E. CAPACITOR 25V 4.7U	1	
C7714	ECEA0JKA101	E. CAPACITOR 6.3V 100U	1	
C7715	ECEA1CKA100	E. CAPACITOR 16V 10U	1	
C7716	ECUM1H120JCN	C. CAPACITOR CH 50V 12P	1	
C7718	ECUX1H561JCN	C. CAPACITOR CH 50V 560P	1	
C7721	ECUM1H103ZFN	C. CAPACITOR CH 50V 0.01U	1	
C7722	ECUM1H270JCN	C. CAPACITOR CH 50V 27P	1	
C7723	ECUM1H104ZFN	C. CAPACITOR CH 50V 0.1U	1	
C7724	ECEA0JKA470	E. CAPACITOR 6.3V 47U	1	
C7726	ECEA0JKA470	E. CAPACITOR 6.3V 47U	1	
C7729	ECUM1H104ZFN	C. CAPACITOR CH 50V 0.1U	1	
C7730	ECUM1H820JCN	C. CAPACITOR CH 50V 82P	1	
C7731	ECUM1H104ZFN	C. CAPACITOR CH 50V 0.1U	1	
C7732	ECUM1H102JCN	C. CAPACITOR CH 50V 1000P	1	
C7734	ECUM1H104ZFN	C. CAPACITOR CH 50V 0.1U	1	
C7736	ECUM1H104ZFN	C. CAPACITOR CH 50V 0.1U	1	
C7737	ECEA0JKA470	E. CAPACITOR 6.3V 47U	1	
C7738, 39	ECUM1H104ZFN	C. CAPACITOR CH 50V 0.1U	2	
C7743	ECUM1H104ZFN	C. CAPACITOR CH 50V 0.1U	1	
C7747	ECUM1H104ZFN	C. CAPACITOR CH 50V 0.1U	1	
C7752	ECEA1HKA2R2	E. CAPACITOR 50V 2.2U	1	
C7753, 54	ECUM1H221JCN	C. CAPACITOR CH 50V 220P	2	
C7755-57	ECUM1H104ZFN	C. CAPACITOR CH 50V 0.1U	3	
C7759, 60	ECUM1H101JCN	C. CAPACITOR CH 50V 100P	2	
D302, 03	1SS355	DIODE	2	
D313, 14	1SS355	DIODE	2	
D318	1SS355	DIODE	1	
D319	MA151K	DIODE	1	
D320	MA151WK	DIODE	1	
D321	1SS355	DIODE	1	
D802-04	1SS355	DIODE	3	
D1001	MA4051-L	DIODE	1	
D1003	MA4120-M	DIODE	1	
D1004	MA4051-L	DIODE	1	
D1005	1SS355	DIODE	1	
D1007, 08	1SS355	DIODE	2	
D1009	1SS254	DIODE	1	
D2001	MA153	DIODE	1	
D2002	MA151K	DIODE	1	
D2003-05	1SS355	DIODE	3	
D2006, 07	MA700	DIODE	2	
D2008, 09	MA185	DIODE	2	
D2010-13	1SS355	DIODE	4	
D3001, 02	1SS254	DIODE	2	
D3005	MA723-VT	DIODE	1	
D4003-05	1SS254	DIODE	3	
D4007	ERDS2TJ102	C. RESISTOR 1/4W 1K	1	
D4504	1SS254	DIODE	1	
D6001	LN59LT. VT	LED	1	
D6002	MA4075-L	DIODE	1	

Ref.No.	Part No.	Part Name & Description	Pcs	Remarks
D6003	MA151K	DIODE	1	
D7304	MA29T-B	DIODE	1	
D7305	1SS254	DIODE	1	
D7307	MA151K	DIODE	1	
D7601	MA4300-M	DIODE	1	
D7602, 03	1SS254	DIODE	2	
D7704	MA700A	DIODE	1	
D7705	1SS254	DIODE	1	
D7707	1SS254	DIODE	1	
IC301	TDA9725V2	IC	1	[SUPPLIED FROM MBV]
IC302	TL8850AF	IC	1	
IC0701	LA7576	IC	1	
IC1001	HA17431PA	IC	1	
IC2001	BA6887-V3	IC	1	
IC2002	BA6871BS	IC	1	
IC2003	AN3814K	IC	1	
IC4001	BA7795FS	IC	1	
IC4501	BH7778AK	IC	1	
IC6001	MN675536VR9Y	IC	1	[SUPPLIED FROM MBV]
IC6002, 03	ON1387	PHOTO INTERRUPTER	2	
IC7301	TDA9845	IC	1	
IC7302	TA8721SN	IC	1	
IC7701	M27C1001BAAA	IC	1	[SUPPLIED FROM MBV]
IC7702	MC74HCT573AW	IC	1	[SUPPLIED FROM MBV]
IC7703	NJM2535M	IC	1	[SUPPLIED FROM MBV]
IC7704	ST24W16FB6	IC	1	[SUPPLIED FROM MBV]
IC7706	SABC513AL16P	IC	1	[SUPPLIED FROM MBV]
IC7708	SAA5281ZPM3	IC	1	
IC7712	MC74HCT74AD	IC	1	[SUPPLIED FROM MBV]
K309	ERJ6GEY0R00	M. RESISTOR CH 1/10W 0	1	
K310	ERJ3GEY0R00	M. RESISTOR CH 1/16W 0	1	
K319	ERJ3GEY0R00	M. RESISTOR CH 1/16W 0	1	
K0702	ERJ3GEY0R00	M. RESISTOR CH 1/16W 0	1	
K0704, 05	ERJ3GEY0R00	M. RESISTOR CH 1/16W 0	2	
K3001	ERJ6GMZ0R00	M. RESISTOR CH 1/10W 0	1	
K3005	ERJ6GMZ0R00	M. RESISTOR CH 1/10W 0	1	
K3014, 15	ERJ6GMZ0R00	M. RESISTOR CH 1/10W 0	2	
K4002	ERJ6GMZ0R00	M. RESISTOR CH 1/10W 0	1	
K4004	ERJ6GMZ0R00	M. RESISTOR CH 1/10W 0	1	
K4502-06	ERJ3GEY0R00	M. RESISTOR CH 1/16W 0	5	
K6002	ERJ6GMZ0R00	M. RESISTOR CH 1/10W 0	1	
K6006, 07	ERJ6GMZ0R00	M. RESISTOR CH 1/10W 0	2	
K7302	ERJ3GEY0R00	M. RESISTOR CH 1/16W 0	1	
K7315	ERJ3GEYG302	M. RESISTOR CH 1/16W 3K	1	
K7316	ERJ6GEY0R00	M. RESISTOR CH 1/10W 0	1	
K7619	ERJ6GMZ0R00	M. RESISTOR CH 1/10W 0	1	
K7621	ERJ6GMZ0R00	M. RESISTOR CH 1/10W 0	1	
K7624	ERJ6GMZ0R00	M. RESISTOR CH 1/10W 0	1	
K7625	ERJ6GEY0R00	M. RESISTOR CH 1/10W 0	1	
K7709	ERJ6GMZ0R00	M. RESISTOR CH 1/10W 0	1	
K7712	ERJ6GMZ0R00	M. RESISTOR CH 1/10W 0	1	
K7714	ERJ6GMZ0R00	M. RESISTOR CH 1/10W 0	1	
L301	VLQ0599J151	COIL 150UH	1	
L302, 03	VLQ0599J100	COIL 10UH	2	
L304	VLQ0599J390	COIL 39UH	1	
L305	VLQ0599J470	COIL 47UH	1	
L306	VLQ0599J101	COIL 100UH	1	
L307	VLQ0599J270	COIL 27UH	1	
L308	VLQ0599J100	COIL 10UH	1	
L309	VLQ0599J470	COIL 47UH	1	
L311, 12	VLQ0599J680	COIL 68UH	2	
L313, 14	VLQ0599J390	COIL 39UH	2	
L315	VLQ0599J101	COIL 100UH	1	
L0701	VLQ0163JR18	COIL 0.18UH	1	[SUPPLIED FROM MBV]
L0705	VLQ0163J5R6	COIL 5.6UH	1	
L0706	VLQEL05S150K	COIL 15UH	1	
L801	VLQ0599J101	COIL 100UH	1	
L2001	VLP0083	COIL	1	
L3001	VLQ0599J820	COIL 82UH	1	
L3002	VLQ0599J151	COIL 150UH	1	
L3003	VLQ0599J6R8	COIL 6.8UH	1	
L3004	VLQ0599J120	COIL 12UH	1	

Ref. No.	Part No.	Part Name & Description	Pcs	Remarks
L3006	VLQ0599J101	COIL 100UH	1	
L3008	VLQ0599J270	COIL 27UH	1	
L3009	VLQ0599J680	COIL 68UH	1	
L3012	VLQ0599J680	COIL 68UH	1	
L4002	ELESN471KA	INDUCTOR 470UH	1	
L4003	VLQ0599J680	COIL 68UH	1	
L4005, 06	ERJ6GMZ0R00	M. RESISTOR CH 1/10W 0	2	
L4007	VLQ0123	COIL	1	
L6001	VLQ0599J101	COIL 100UH	1	
L6002	VLP0083	COIL	1	
L6003, 04	VLQ0599J680	COIL 68UH	2	
L7603, 04	VLQ0599J680	COIL 68UH	2	
L7606	VLQ0599J180	COIL 18UH	1	
L7607, 08	VLQ0599J330	COIL 33UH	2	
L7702	VLQ0599J3R3	COIL 3.3UH	1	
L7703	VLQ0599J270	COIL 27UH	1	
L7704	VLQ0599J100	COIL 10UH	1	
L7705	VLQ0599J101	COIL 100UH	1	
L7707	VLQ0599J120	COIL 12UH	1	
LB303-06	VLP0145	COIL	4	
LB307-11	ERJ6GEY0R00	M. RESISTOR CH 1/10W 0	5	
LB312	VLP0145	COIL	1	
LB1001	VLP0125	COIL	1	
LB3001	VLP0083	COIL	1	
P2001	VJS3640A002	CONNECTOR (FEMALE) 2P	1	
P2002	VJS3537A015G	CONNECTOR (FEMALE) 15P	1	
P2003	VJP3483	CONNECTOR (MALE)	1	
P2005	VJS3537A009G	CONNECTOR (FEMALE) 9P	1	
P3002	VJS3537A020G	CONNECTOR (FEMALE) 20P	1	
P4002	VJS3675E006G	CONNECTOR (FEMALE) 6P	1	
P4003	VJP1230T	CONNECTOR (MALE) 3P	1	
P6001	VJS3639A004	CONNECTOR (FEMALE) 4P	1	
PK301	VJR0776B010W	CONNECTOR (MALE) 10P	1	[SUPPLIED FROM MBV]
PK302	VJR0776B011W	CONNECTOR (MALE) 11P	1	[SUPPLIED FROM MBV]
PK303	VJR0776B012W	CONNECTOR (MALE) 12P	1	[SUPPLIED FROM MBV]
PK304	VJR0776B003W	CONNECTOR (MALE) 3P	1	
PK0701	VJR0816E010W	CONNECTOR (MALE) 10P	1	
PK4501	VJR0777B008W	CONNECTOR (MALE) 8P	1	
PK4502, 03	VJR0777B010W	CONNECTOR (MALE) 10P	2	
PK7301	VJR0777B007W	CONNECTOR (MALE) 7P	1	
PK7302	VJR0777B005W	CONNECTOR (MALE) 5P	1	
PP0701	VJP3589A004B	CONNECTOR (MALE) 4P	1	
PP3002	VJP3042G013W	CONNECTOR (MALE) 13P	1	
PP3003	VJP3042G005W	CONNECTOR (MALE) 5P	1	
PP3004	VJP3042G008W	CONNECTOR (MALE) 8P	1	
PP3005	VJP3042G010W	CONNECTOR (MALE) 10P	1	
PS3001	VJS3673F005G	CONNECTOR (FEMALE) 5P	1	[SUPPLIED FROM MBV]
PS3006	VJS3631A011A	CONNECTOR (FEMALE) 11P	1	
PS6002	VJS3673B025G	CONNECTOR (FEMALE) 25P	1	
Q301, 02	MSD601	TRANSISTOR	2	
Q305	MSD601	TRANSISTOR	1	
Q306	MSB709	TRANSISTOR	1	
Q307	MSB709-R	TRANSISTOR	1	
Q308	MSB709	TRANSISTOR	1	
Q309	MSC2295	TRANSISTOR	1	
Q0701	MSD601-S	TRANSISTOR	1	
Q0702	MSB709-R	TRANSISTOR	1	
Q801	MSB709	TRANSISTOR	1	
Q803	MSC2295	TRANSISTOR	1	
Q804	MSB709	TRANSISTOR	1	
Q805	MSD601	TRANSISTOR	1	
Q1001	MSD601	TRANSISTOR	1	
Q1002-04	2SD1996-S	TRANSISTOR	3	
Q1005	2SD602A	TRANSISTOR	1	
Q1006	2SD1996-S	TRANSISTOR	1	
Q1007	2SD2544OPQA	TRANSISTOR	1	
Q3001	MSC2295	TRANSISTOR	1	
Q3002	MSB709	TRANSISTOR	1	
Q3003, 04	MSD601	TRANSISTOR	2	

Ref. No.	Part No.	Part Name & Description	Pcs	Remarks
Q3005	MSC2295	TRANSISTOR	1	
Q3006	MSB709	TRANSISTOR	1	
Q3007	MSC2295	TRANSISTOR	1	
Q3010	MSB709-R	TRANSISTOR	1	
Q3023	MSC2295	TRANSISTOR	1	
Q3024	MSD601	TRANSISTOR	1	
Q3025	MSC2295	TRANSISTOR	1	
Q4005	2SB1320A-R	TRANSISTOR	1	
Q4006	2SD602A-R	TRANSISTOR	1	
Q4007-09	MSD601-R	TRANSISTOR	3	
Q4501	2SD1468	TRANSISTOR	1	
Q4551	2SA1515	TRANSISTOR	1	
Q6001	MSB709	TRANSISTOR	1	
Q6002, 03	PN205LT-NCVT	PHOTO TRANSISTOR	2	
Q7301	MSD601-S	TRANSISTOR	1	
Q7601	XN4601	TRANSISTOR-TRANSISTOR	1	
Q7602	MSD601	TRANSISTOR	1	
Q7603	2SB710A	TRANSISTOR	1	
Q7701-03	MSB709	TRANSISTOR	3	
Q7704, 05	MSD601	TRANSISTOR	2	
Q7706	MSB709	TRANSISTOR	1	
Q7708-12	MSD601	TRANSISTOR	5	
QR302	MUN2113	TRANSISTOR-RESISTOR	1	
QR305	MUN2213	TRANSISTOR-RESISTOR	1	
QR317	MUN2213	TRANSISTOR-RESISTOR	1	
QR801	MUN2213	TRANSISTOR-RESISTOR	1	
QR1001, 02	MUN2113	TRANSISTOR-RESISTOR	2	
QR1003	MUN2213	TRANSISTOR-RESISTOR	1	
QR3001	MUN2111	TRANSISTOR-RESISTOR	1	
QR3002, 03	DTC363EK	TRANSISTOR-RESISTOR	2	
QR3027	MUN2212	TRANSISTOR-RESISTOR	1	
QR4001	MUN2212	TRANSISTOR-RESISTOR	1	
QR6001	XN1211	TRANSISTOR-RESISTOR	1	
QR6002	UN2114	TRANSISTOR-RESISTOR	1	
QR6004	XN1213	TRANSISTOR-RESISTOR	1	
QR7304	MUN2213	TRANSISTOR-RESISTOR	1	
QR7601	MUN2213	TRANSISTOR-RESISTOR	1	
QR7602	MUN2212	TRANSISTOR-RESISTOR	1	
QR7603	MUN2213	TRANSISTOR-RESISTOR	1	
QR7703	MUN2113	TRANSISTOR-RESISTOR	1	
R303	ERJ3GEYJ182	M. RESISTOR CH 1/16W 1.8K	1	
R304	ERJ3GEYJ225	M. RESISTOR CH 1/16W 2.2M	1	
R305	ERJ3GEYG682	M. RESISTOR CH 1/16W 6.8K	1	
R307	ERJ3GEYJ271	M. RESISTOR CH 1/16W 270	1	
R308	ERJ3GEYG102	M. RESISTOR CH 1/16W 1K	1	
R309	ERJ3GEYJ271	M. RESISTOR CH 1/16W 270	1	
R310, 11	ERJ3GEYG152	M. RESISTOR CH 1/16W 1.5K	2	
R312	ERJ3GEYG472	M. RESISTOR CH 1/16W 4.7K	1	
R313	ERJ3GEYJ473	M. RESISTOR CH 1/16W 47K	1	
R314	ERJ3GEYJ683	M. RESISTOR CH 1/16W 68K	1	
R315	ERJ3GEYJ223	M. RESISTOR CH 1/16W 22K	1	
R316	ERJ3GEYJ103	M. RESISTOR CH 1/16W 10K	1	
R317	ERJ3GEYG472	M. RESISTOR CH 1/16W 4.7K	1	
R319	ERJ3GEYJ183	M. RESISTOR CH 1/16W 18K	1	
R320	ERJ3GEYJ821	M. RESISTOR CH 1/16W 820	1	
R321	ERJ3GEYJ120	M. RESISTOR CH 1/16W 12	1	
R322	ERJ3GEYJ223	M. RESISTOR CH 1/16W 22K	1	
R323	ERJ3GEYG102	M. RESISTOR CH 1/16W 1K	1	
R324, 25	ERJ3GEYJ103	M. RESISTOR CH 1/16W 10K	2	
R326	ERJ3GEYJ242	M. RESISTOR CH 1/16W 2.4K	1	
R327	ERJ3GEYG102	M. RESISTOR CH 1/16W 1K	1	
R328	ERJ3GEYJ272	M. RESISTOR CH 1/16W 2.7K	1	
R329	ERJ3GEYJ182	M. RESISTOR CH 1/16W 1.8K	1	
R330	ERJ3GEYJ122	M. RESISTOR CH 1/16W 1.2K	1	
R332	ERJ3GEYJ390	M. RESISTOR CH 1/16W 39	1	
R333	ERJ3GEYJ561	M. RESISTOR CH 1/16W 560	1	
R335	ERJ3GEYJ122	M. RESISTOR CH 1/16W 1.2K	1	
R337	ERJ3GEYJ561	M. RESISTOR CH 1/16W 560	1	
R338	ERJ3GEYG471	M. RESISTOR CH 1/16W 470	1	
R339	ERJ3GEYJ333	M. RESISTOR CH 1/16W 33K	1	
R340	ERJ3GEYJ182	M. RESISTOR CH 1/16W 1.8K	1	
R341	ERJ3GEYJ101	M. RESISTOR CH 1/16W 100	1	
R344	ERJ3GEYJ473	M. RESISTOR CH 1/16W 47K	1	

Ref.No.	Part No.	Part Name & Description	Pcs	Remarks
R347	ERJ3GEYJ473	M.RESISTOR CH 1/16W 47K	1	
R353	ERJ3GEYG102	M.RESISTOR CH 1/16W 1K	1	
R354	ERJ3GEYJ681	M.RESISTOR CH 1/16W 680	1	
R355	ERJ3GEYJ331	M.RESISTOR CH 1/16W 330	1	
R356,57	ERJ3GEYJ821	M.RESISTOR CH 1/16W 820	2	
R359	ERJ3GEYG102	M.RESISTOR CH 1/16W 1K	1	
R360	ERJ3GEYJ221	M.RESISTOR CH 1/16W 220	1	
R369	ERJ3GEYJ393	M.RESISTOR CH 1/16W 39K	1	
R374	ERJ3GEYG102	M.RESISTOR CH 1/16W 1K	1	
R375	ERJ3GEYJ101	M.RESISTOR CH 1/16W 100	1	
R376	ERJ3GEYJ470	M.RESISTOR CH 1/16W 47	1	
R0704	ERJ3GEYJ222	M.RESISTOR CH 1/16W 2.2K	1	
R0705	ERJ3GEYJ562	M.RESISTOR CH 1/16W 5.6K	1	
R0706,07	ERJ3GEYJ272	M.RESISTOR CH 1/16W 2.7K	2	
R0708	ERJ3GEYG152	M.RESISTOR CH 1/16W 1.5K	1	
R0709	ERJ3GEYJ105	M.RESISTOR CH 1/16W 1M	1	
R0710	ERJ6GEYG154	M.RESISTOR CH 1/10W 150K	1	
R0713	ERJ3GEYJ391	M.RESISTOR CH 1/16W 390	1	
R0714	ERJ3GEYJ470	M.RESISTOR CH 1/16W 47	1	
R0715	ERJ3GEYJ183	M.RESISTOR CH 1/16W 18K	1	
R0716	VRE0040E151	M.RESISTOR CH 1/10W 150	1	
R0717	ERJ3GEYJ330	M.RESISTOR CH 1/16W 33	1	
R0718	ERJ3GEYG102	M.RESISTOR CH 1/16W 1K	1	
R0719	ERJ6GEYF822	M.RESISTOR CH 1/10W 8.2K	1	
R0720	ERJ3GEYG102	M.RESISTOR CH 1/16W 1K	1	
R0722	ERJ3GEYJ101	M.RESISTOR CH 1/16W 100	1	
R0728	ERJ3GEYG471	M.RESISTOR CH 1/16W 470	1	
R0729	ERJ3GEYG102	M.RESISTOR CH 1/16W 1K	1	
R0732	ERJ3GEYG471	M.RESISTOR CH 1/16W 470	1	
R0783	ERJ3GEYJ393	M.RESISTOR CH 1/16W 39K	1	
R801	ERJ3GEYJ222	M.RESISTOR CH 1/16W 2.2K	1	
R802	ERJ3GEYG681	M.RESISTOR CH 1/16W 680	1	
R803	ERJ3GEYG182	M.RESISTOR CH 1/16W 1.8K	1	
R810	ERJ3GEYJ103	M.RESISTOR CH 1/16W 10K	1	
R811	ERJ3GEYJ273	M.RESISTOR CH 1/16W 27K	1	
R812	ERJ3GEYJ563	M.RESISTOR CH 1/16W 56K	1	
R813	ERJ3GEYG561	M.RESISTOR CH 1/16W 560	1	
R814	ERJ3GEYG103	M.RESISTOR CH 1/16W 10K	1	
R815	ERJ3GEYG681	M.RESISTOR CH 1/16W 680	1	
R816	ERJ3GEYG181	M.RESISTOR CH 1/16W 180	1	
R817	ERJ3GEYG101	M.RESISTOR CH 1/16W 100	1	[SUPPLIED FROM MBV]
R818	ERJ3GEYG242	M.RESISTOR CH 1/16W 2.4K	1	
R1001	ERJ6GMYG333	M.RESISTOR CH 1/10W 33K	1	
R1002	ERDS2TJ102	C.RESISTOR 1/4W 1K	1	
R1003	ERJ6GMYG272	M.RESISTOR CH 1/10W 2.7K	1	
R1004	ERJ6GMYJ363	M.RESISTOR CH 1/10W 36K	1	
R1005	ERJ6GMYG272	M.RESISTOR CH 1/10W 2.7K	1	
R1006	ERDS2TJ122	C.RESISTOR 1/4W 1.2K	1	
R1007	ERJ6GMYG102	M.RESISTOR CH 1/10W 1K	1	
R1008	ERJ6GMYG333	M.RESISTOR CH 1/10W 33K	1	
R1009,10	ERJ6GMYG562	M.RESISTOR CH 1/10W 5.6K	2	
R1011	ERDS1TJ272	C.RESISTOR 1/2W 2.7K	1	
R2001	ERJ6GMYG913	M.RESISTOR CH 1/10W 91K	1	
R2002-04	ERJ6GMYG102	M.RESISTOR CH 1/10W 1K	3	
R2005	ERX1SJ1R8	M.RESISTOR 1W 1.8	1	
R2006	ERJ6GMYG512	M.RESISTOR CH 1/10W 5.1K	1	
R2007	ERJ6GMYG222	M.RESISTOR CH 1/10W 2.2K	1	
R2009,10	ERJ6GMYG103	M.RESISTOR CH 1/10W 10K	2	
R2011	ERJ6GMYG102	M.RESISTOR CH 1/10W 1K	1	
R2012	ERJ6GMYJ221	M.RESISTOR CH 1/10W 220	1	
R2013	ERJ6GMYG272	M.RESISTOR CH 1/10W 2.7K	1	
R2014,15	ERJ6GMYJ223	M.RESISTOR CH 1/10W 22K	2	
R2016	ERJ6GMYG222	M.RESISTOR CH 1/10W 2.2K	1	
R2017,18	ERJ6GMYJ223	M.RESISTOR CH 1/10W 22K	2	
R2019	ERJ6GMYG103	M.RESISTOR CH 1/10W 10K	1	
R2020	ERJ6GMYG471	M.RESISTOR CH 1/10W 470	1	
R2021	ERJ6GMYG103	M.RESISTOR CH 1/10W 10K	1	
R2022	ERJ6GMYG222	M.RESISTOR CH 1/10W 2.2K	1	
R2023	ERDS2CKG8200	M.RESISTOR 1/4W 820	1	
R2024	ERDS2CKG6800	M.RESISTOR 1/4W 680	1	
R2025	ERJ6GMYG102	M.RESISTOR CH 1/10W 1K	1	
R2026,27	ERDS2TJ560	C.RESISTOR 1/4W 56	2	
R2028	ERDS1TJ561	C.RESISTOR 1/2W 560	1	
R2029	ERJ6GMYG222	M.RESISTOR CH 1/10W 2.2K	1	
R2030	ERJ6GMYG432	M.RESISTOR CH 1/10W 4.3K	1	

Ref.No.	Part No.	Part Name & Description	Pcs	Remarks
R2031	ERJ6GMYG473	M.RESISTOR CH 1/10W 47K	1	
R2032	ERJ6GMYG103	M.RESISTOR CH 1/10W 10K	1	
R2033	ERJ6GMYJ684	M.RESISTOR CH 1/10W 680K	1	
R2034	ERJ6GMYG133	M.RESISTOR CH 1/10W 13K	1	
R2035	ERJ6GMYJ105	M.RESISTOR CH 1/10W 1M	1	
R2036,37	ERJ6GMYG472	M.RESISTOR CH 1/10W 4.7K	2	
R2038	ERJ6GMYG102	M.RESISTOR CH 1/10W 1K	1	
R2039,40	ERJ6GMYJ105	M.RESISTOR CH 1/10W 1M	2	
R2041,42	ERJ6GMYG392	M.RESISTOR CH 1/10W 3.9K	2	
R2043	ERDS2TJ560	C.RESISTOR 1/4W 56	1	
R2044	ERX12SJR47	M.RESISTOR 1/2W 0.47	1	
R2045	ERDS2FJ1R5	C.RESISTOR 1/4W 1.5	1	
R2046-48	ERDS2TJ330	C.RESISTOR 1/4W 33	3	
R2049	ERDS2FJ1R2	C.RESISTOR 1/4W 1.2	1	
R2050,51	ERJ6GMYG332	M.RESISTOR CH 1/10W 3.3K	2	
R2052	ERDS2TJ122	C.RESISTOR 1/4W 1.2K	1	
R3001	ERJ6GMYG561	M.RESISTOR CH 1/10W 560	1	
R3002	ERJ6GMYG472	M.RESISTOR CH 1/10W 4.7K	1	
R3003	ERJ6GMYG222	M.RESISTOR CH 1/10W 2.2K	1	
R3004	ERJ6GMYG272	M.RESISTOR CH 1/10W 2.7K	1	
R3005	ERJ6GMYG332	M.RESISTOR CH 1/10W 3.3K	1	
R3006	ERDS2TJ472	C.RESISTOR 1/4W 4.7K	1	
R3007	ERJ6GMYG681	M.RESISTOR CH 1/10W 680	1	
R3008	ERJ6GMYG222	M.RESISTOR CH 1/10W 2.2K	1	
R3009	ERJ6GMYG392	M.RESISTOR CH 1/10W 3.9K	1	
R3012	ERJ6GMZ0R00	M.RESISTOR CH 1/10W 0	1	
R3015	ERJ6GMYG222	M.RESISTOR CH 1/10W 2.2K	1	
R3018	ERJ6GMYJ223	M.RESISTOR CH 1/10W 22K	1	
R3019,20	ERJ6GMYG561	M.RESISTOR CH 1/10W 560	2	
R3021	ERJ6GMYJ391	M.RESISTOR CH 1/10W 390	1	
R3022	ERJ6GMYG102	M.RESISTOR CH 1/10W 1K	1	
R3023,24	ERJ6GMYG821	M.RESISTOR CH 1/10W 820	2	
R3025	ERJ6GMYG152	M.RESISTOR CH 1/10W 1.5K	1	
R3026	ERJ6GMYG102	M.RESISTOR CH 1/10W 1K	1	
R3029	ERJ6GMYG222	M.RESISTOR CH 1/10W 2.2K	1	
R3030	ERJ6GEYG103	M.RESISTOR CH 1/10W 10K	1	
R3031	ERJ6GEYG102	M.RESISTOR CH 1/10W 1K	1	
R3032	ERJ6GMYG334	M.RESISTOR CH 1/10W 330K	1	
R3033	ERJ6GMYJ223	M.RESISTOR CH 1/10W 22K	1	
R3034	ERJ6GMYG103	M.RESISTOR CH 1/10W 10K	1	
R3037	ERDS2TJ102	C.RESISTOR 1/4W 1K	1	
R3039	ERJ6GMYG102	M.RESISTOR CH 1/10W 1K	1	
R3065	ERJ6GMYG103	M.RESISTOR CH 1/10W 10K	1	
R3068,69	ERJ6GMYG103	M.RESISTOR CH 1/10W 10K	2	
R3076,77	ERJ6GMYG103	M.RESISTOR CH 1/10W 10K	2	
R3078	ERDS2T0	C.RESISTOR 1/4W 0	1	
R3079,80	ERJ6GMYG102	M.RESISTOR CH 1/10W 1K	2	
R3081	ERJ6GMYJ221	M.RESISTOR CH 1/10W 220	1	
R3082	ERJ6GMYG152	M.RESISTOR CH 1/10W 1.5K	1	
R3083	ERDS2TJ102	C.RESISTOR 1/4W 1K	1	
R3084	ERDS2TJ330	C.RESISTOR 1/4W 33	1	
R3085	ERJ6GMYG102	M.RESISTOR CH 1/10W 1K	1	
R3087	ERJ6GMYG563	M.RESISTOR CH 1/10W 56K	1	
R4003	ERJ6GMYG100	M.RESISTOR CH 1/10W 10	1	
R4007	ERJ6GMYG153	M.RESISTOR CH 1/10W 15K	1	
R4011	ERJ6GMYG103	M.RESISTOR CH 1/10W 10K	1	
R4012	ERJ6GMYG123	M.RESISTOR CH 1/10W 12K	1	
R4013	ERJ6GMYJ163	M.RESISTOR CH 1/10W 16K	1	
R4014	ERJ6GMYG562	M.RESISTOR CH 1/10W 5.6K	1	
R4015	ERJ6GMYG333	M.RESISTOR CH 1/10W 33K	1	
R4016	ERJ6GMYJ223	M.RESISTOR CH 1/10W 22K	1	
R4017	ERJ6GMYG133	M.RESISTOR CH 1/10W 1.3K	1	
R4019	ERJ6GMYJ105	M.RESISTOR CH 1/10W 1M	1	
R4020	ERJ6GMYG123	M.RESISTOR CH 1/10W 12K	1	
R4021	ERJ6GMYG393	M.RESISTOR CH 1/10W 39K	1	
R4022	ERJ6GMYG391	M.RESISTOR CH 1/10W 390	1	
R4023	ERJ6GMYG394	M.RESISTOR CH 1/10W 390K	1	
R4024	ERDS2TJ221	C.RESISTOR 1/4W 220	1	
R4025	ERJ6GMYG682	M.RESISTOR CH 1/10W 6.8K	1	
R4026	ERJ6GMYG473	M.RESISTOR CH 1/10W 47K	1	
R4027,28	ERJ6GMYG103	M.RESISTOR CH 1/10W 10K	2	
R4029	ERJ6GMYG912	M.RESISTOR CH 1/10W 9.1K	1	
R4030	ERJ6GMZ0R00	M.RESISTOR CH 1/10W 0	1	
R4031	ERJ6GMYG222	M.RESISTOR CH 1/10W 2.2K	1	
R4032	ERJ6GMYG271	M.RESISTOR CH 1/10W 270	1	

Ref.No.	Part No.	Part Name & Description	Pcs	Remarks
R4033	ERJ6GMYG681	M.RESISTOR CH 1/10W 680	1	
R4034	ERJ6GMYG183	M.RESISTOR CH 1/10W 18K	1	
R4035,36	ERJ6GMYJ223	M.RESISTOR CH 1/10W 22K	2	
R4037	ERJ6GMYG103	M.RESISTOR CH 1/10W 10K	1	
R4038	ERJ6GMYG332	M.RESISTOR CH 1/10W 3.3K	1	
R4039	ERJ6GMYG102	M.RESISTOR CH 1/10W 1K	1	
R4040	ERDS2TJ102	C.RESISTOR 1/4W 1K	1	
R4041,42	ERJ6GMYG393	M.RESISTOR CH 1/10W 39K	2	
R4043	ERG2SJ821	M.RESISTOR 2W 330	1	
R4044	ERDS2TJ102	C.RESISTOR 1/4W 1K	1	
R4048	ERJ6GMYG473	M.RESISTOR CH 1/10W 47K	1	
R4049	ERJ6GMYG682	M.RESISTOR CH 1/10W 6.8K	1	
R4050	ERJ6GMYJ221	M.RESISTOR CH 1/10W 220	1	
R4051	ERJ6GMYG822	M.RESISTOR CH 1/10W 8.2K	1	
R4054	ERJ6GMZ0R00	M.RESISTOR CH 1/10W 0	1	
R4055	ERJ6GMYG153	M.RESISTOR CH 1/10W 15K	1	
R4056	ERJ6GMYG393	M.RESISTOR CH 1/10W 39K	1	
R4057	ERJ6GMYG272	M.RESISTOR CH 1/10W 2.7K	1	
R4058	ERJ6GMYG472	M.RESISTOR CH 1/10W 4.7K	1	
R4059	ERJ6GMYG332	M.RESISTOR CH 1/10W 3.3K	1	
R4067,68	ERJ6GMZ0R00	M.RESISTOR CH 1/10W 0	2	
R4071	ERJ6GMZ0R00	M.RESISTOR CH 1/10W 0	1	
R4073	ERJ6GMYG103	M.RESISTOR CH 1/10W 10K	1	
R4503	ERJ3RBD203	M.RESISTOR CH 1/16W 20K	1	
R4504	ERJ3GEYG224	M.RESISTOR CH 1/16W 220K	1	
R4508	ERJ3GEYG224	M.RESISTOR CH 1/16W 220K	1	
R4512	ERJ3RBD113	M.RESISTOR CH 1/16W 11K	1	
R4513	ERJ3GEYJ103	M.RESISTOR CH 1/16W 10K	1	
R4517,18	ERJ3GEYJ221	M.RESISTOR CH 1/16W 220	2	
R4519,20	ERJ3GEYJ103	M.RESISTOR CH 1/16W 10K	2	
R4522	ERJ3GEYK225	M.RESISTOR CH 1/16W 2.2M	1	
R4528	ERJ3RBD153	M.RESISTOR CH 1/16W 15K	1	
R4529	ERJ3GEYG562	M.RESISTOR CH 1/16W 5.6K	1	
R4530	ERJ3GEYJ334	M.RESISTOR CH 1/16W 330K	1	
R4534	ERJ3GEYJ103	M.RESISTOR CH 1/16W 10K	1	
R4542	ERJ3GEYJ223	M.RESISTOR CH 1/16W 22K	1	
R4562	ERJ3RBD822	M.RESISTOR CH 1/16W 8.2K	1	
R4563	ERJ3GEYJ272	M.RESISTOR CH 1/16W 2.7K	1	
R4584	ERJ3GEYJ103	M.RESISTOR CH 1/16W 10K	1	
R4585	ERJ3GEY0R00	M.RESISTOR CH 1/16W 0	1	
R4586	ERJ3GEYJ103	M.RESISTOR CH 1/16W 10K	1	
R4601	ERJ3GEYJ473	M.RESISTOR CH 1/16W 47K	1	
R4603,04	ERJ3GEYJ473	M.RESISTOR CH 1/16W 47K	2	
R4605	ERJ6GEYG203	M.RESISTOR CH 1/10W 20K	1	
R4606	ERJ3GEYJ203	M.RESISTOR CH 1/16W 20K	1	
R4607	ERJ3GEYJ473	M.RESISTOR CH 1/16W 47K	1	
R4608	ERDS2TJ103	C.RESISTOR 1/4W 10K	1	
R4621	ERJ6GEYG163	M.RESISTOR CH 1/10W 16K	1	
R4623	ERJ3GEYJ221	M.RESISTOR CH 1/16W 220	1	
R4624	ERJ3GEYJ103	M.RESISTOR CH 1/16W 10K	1	
R4641,42	ERJ3GEY0R00	M.RESISTOR CH 1/16W 0	2	
R4663,64	ERJ3GEYJ103	M.RESISTOR CH 1/16W 10K	2	
R4695	ERJ3GEYJ473	M.RESISTOR CH 1/16W 47K	1	
R4697	ERJ6GEYG562	M.RESISTOR CH 1/10W 5.6K	1	
R4698	ERJ3GEYJ393	M.RESISTOR CH 1/16W 39K	1	
R4704	ERJ3GEYJ393	M.RESISTOR CH 1/16W 39K	1	
R6001	ERJ6GMYJ201	M.RESISTOR CH 1/10W 200	1	
R6002	ERJ6GMYG272	M.RESISTOR CH 1/10W 2.7K	1	
R6003-05	ERJ6GMYG333	M.RESISTOR CH 1/10W 33K	3	
R6006,07	ERJ6GMYG223	M.RESISTOR CH 1/10W 22K	2	
R6008	ERJ6GMYG272	M.RESISTOR CH 1/10W 2.7K	1	
R6009	ERJ6GMYG103	M.RESISTOR CH 1/10W 10K	1	
R6010	ERJ6GMYG272	M.RESISTOR CH 1/10W 2.7K	1	
R6011	ERJ6GMYG102	M.RESISTOR CH 1/10W 1K	1	
R6012,13	ERJ6GMYG101	M.RESISTOR CH 1/10W 100	2	
R6014	ERJ6GMYG473	M.RESISTOR CH 1/10W 47K	1	
R6015	ERJ6GMYG104	M.RESISTOR CH 1/10W 100K	1	
R6016	ERJ6GMYJ683	M.RESISTOR CH 1/10W 68K	1	
R6017	ERDS2TJ103	C.RESISTOR 1/4W 10K	1	
R6019	ERDS2TJ473	C.RESISTOR 1/4W 47K	1	
R6020	ERJ6GMYG104	M.RESISTOR CH 1/10W 100K	1	
R6021-23	ERJ6GMYG101	M.RESISTOR CH 1/10W 100	3	
R6024	ERJ6GMYG222	M.RESISTOR CH 1/10W 2.2K	1	
R6025	ERJ6GMYG103	M.RESISTOR CH 1/10W 10K	1	
R6026	ERJ6GMYG473	M.RESISTOR CH 1/10W 47K	1	

Ref.No.	Part No.	Part Name & Description	Pcs	Remarks
R6027	ERJ6GMYG102	M.RESISTOR CH 1/10W 1K	1	
R6028	ERJ6GMYG392	M.RESISTOR CH 1/10W 3.9K	1	
R6029,30	ERJ6GMYG272	M.RESISTOR CH 1/10W 2.7K	2	
R6033	ERJ6GMYG272	M.RESISTOR CH 1/10W 2.7K	1	
R6034	ERJ6GMYG102	M.RESISTOR CH 1/10W 1K	1	
R6035,36	ERJ6GMYJ221	M.RESISTOR CH 1/10W 220	2	
R6037,38	ERJ6GMYG102	M.RESISTOR CH 1/10W 1K	2	
R6039	ERDS2TJ271	C.RESISTOR 1/4W 270	1	
R6040,41	ERJ6GMYJ683	M.RESISTOR CH 1/10W 68K	2	
R6043	ERJ6GMZ0R00	M.RESISTOR CH 1/10W 0	1	
R6044	ERJ6GMYG103	M.RESISTOR CH 1/10W 10K	1	
R6046	ERJ6GMYG103	M.RESISTOR CH 1/10W 10K	1	
R6048	ERJ6GMYG103	M.RESISTOR CH 1/10W 10K	1	
R6049	ERDS2TJ102	C.RESISTOR 1/4W 1K	1	
R6050	ERJ6GMYG102	M.RESISTOR CH 1/10W 1K	1	
R6052	ERJ6GMYG103	M.RESISTOR CH 1/10W 10K	1	
R6054	ERJ6GMYG472	M.RESISTOR CH 1/10W 4.7K	1	
R6055	ERJ6GMYG183	M.RESISTOR CH 1/10W 18K	1	
R6056-58	ERJ6GMYG102	M.RESISTOR CH 1/10W 1K	3	
R6059	ERJ6GMYG103	M.RESISTOR CH 1/10W 10K	1	
R6060	ERJ6GMYG822	M.RESISTOR CH 1/10W 8.2K	1	
R6061	ERJ6GMYG243	M.RESISTOR CH 1/10W 24K	1	
R7302	ERJ3GEYG133	M.RESISTOR CH 1/16W 13K	1	
R7303	ERJ3GEYG222	M.RESISTOR CH 1/16W 2.2K	1	
R7304	ERJ3GEYG392	M.RESISTOR CH 1/16W 3.9K	1	
R7305	ERJ3GEYG562	M.RESISTOR CH 1/16W 5.6K	1	
R7307	ERJ3GEYG272	M.RESISTOR CH 1/16W 2.7K	1	
R7311	ERJ3GEY0R00	M.RESISTOR CH 1/16W 0	1	
R7313	ERJ3GEYJ273	M.RESISTOR CH 1/16W 27K	1	
R7320	ERJ6GEYG103	M.RESISTOR CH 1/10W 10K	1	
R7323	ERJ3GEYG472	M.RESISTOR CH 1/16W 4.7K	1	
R7324,25	ERJ3GEYG471	M.RESISTOR CH 1/16W 470	2	
R7326	ERJ3GEYG113	M.RESISTOR CH 1/16W 11K	1	
R7327	ERJ6GEYG103	M.RESISTOR CH 1/10W 10K	1	
R7328	ERJ3GEY0R00	M.RESISTOR CH 1/16W 0	1	
R7329	ERJ3GEYG332	M.RESISTOR CH 1/16W 3.3K	1	
R7330	ERJ3GEY0R00	M.RESISTOR CH 1/16W 0	1	
R7331	ERJ3GEYG113	M.RESISTOR CH 1/16W 11K	1	
R7336	ERJ6GEYJ471	M.RESISTOR CH 1/10W 470	1	
R7337	ERJ3GEYG471	M.RESISTOR CH 1/16W 470	1	
R7345	ERJ3GEYG182	M.RESISTOR CH 1/16W 1.8K	1	
R7352,53	ERJ3GEYJ103	M.RESISTOR CH 1/16W 10K	2	
R7354,55	ERJ3GEYG102	M.RESISTOR CH 1/16W 1K	2	
R7358,59	ERJ3GEY0R00	M.RESISTOR CH 1/16W 0	2	
R7362,63	ERJ3GEYJ103	M.RESISTOR CH 1/16W 10K	2	
R7601	ERJ6GMYG151	M.RESISTOR CH 1/10W 150	1	
R7602,03	ERJ6GMYJ683	M.RESISTOR CH 1/10W 68K	2	
R7604	ERJ6GMYG151	M.RESISTOR CH 1/10W 150	1	
R7605-07	ERJ6GMYG102	M.RESISTOR CH 1/10W 1K	3	
R7612	ERG2SJ331	M.RESISTOR 2W 330	1	
R7614	ERJ6GMYG561	M.RESISTOR CH 1/10W 560	1	
R7615	ERJ6GMYG103	M.RESISTOR CH 1/10W 10K	1	
R7616	ERG2SJ331	M.RESISTOR 2W 330	1	
R7618	ERJ6GMYG472	M.RESISTOR CH 1/10W 4.7K	1	
R7619	ERJ6GMYG103	M.RESISTOR CH 1/10W 10K	1	
R7622,23	ERJ6GMZ0R00	M.RESISTOR CH 1/10W 0	2	
R7624	ERJ6GMYG103	M.RESISTOR CH 1/10W 10K	1	
R7625	ERJ6GMYG272	M.RESISTOR CH 1/10W 2.7K	1	
R7626	ERJ6GMYG222	M.RESISTOR CH 1/10W 2.2K	1	
R7703,04	ERJ6GMYG101	M.RESISTOR CH 1/10W 100	2	
R7705	ERJ6GMYG102	M.RESISTOR CH 1/10W 1K	1	
R7706	ERJ6GMYG273	M.RESISTOR CH 1/10W 27K	1	
R7707	ERJ6GMYG102	M.RESISTOR CH 1/10W 1K	1	
R7708	ERJ6GMYG222	M.RESISTOR CH 1/10W 2.2K	1	
R7709,10	ERJ6GMYG472	M.RESISTOR CH 1/10W 4.7K	2	
R7711	ERJ6GMYJ511	M.RESISTOR CH 1/10W 510	1	
R7712	ERJ6GMYG561	M.RESISTOR CH 1/10W 560	1	
R7713	ERJ6GMYG102	M.RESISTOR CH 1/10W 1K	1	
R7714-19	ERJ6GMYG101	M.RESISTOR CH 1/10W 100	6	
R7722,23	ERJ6GMYG472	M.RESISTOR CH 1/10W 4.7K	2	
R7725	ERJ6GMYG332	M.RESISTOR CH 1/10W 3.3K	1	
R7726	ERJ6GMYG273	M.RESISTOR CH 1/10W 27K	1	
R7727	ERJ6GMYG472	M.RESISTOR CH 1/10W 4.7K	1	
R7732	ERJ6GMYG472	M.RESISTOR CH 1/10W 4.7K	1	
R7733	ERJ6GMYG104	M.RESISTOR CH 1/10W 100K	1	

Ref.No.	Part No.	Part Name & Description	Pcs	Remarks
R7735	ERJ6GMYG104	M.RESISTOR CH 1/10W 100K	1	
R7736	ERJ6GMYG472	M.RESISTOR CH 1/10W 4.7K	1	
R7737,38	ERJ6GMYJ221	M.RESISTOR CH 1/10W 220	2	
R7739	ERJ6GMYG102	M.RESISTOR CH 1/10W 1K	1	
R7740	ERJ6GMYG911	M.RESISTOR CH 1/10W 910	1	
R7746	ERJ6GMYG393	M.RESISTOR CH 1/10W 39K	1	
R7747	ERJ6GMYG472	M.RESISTOR CH 1/10W 4.7K	1	
R7750	ERJ6GMYG331	M.RESISTOR CH 1/10W 330	1	
R7751,52	ERJ6GMYG102	M.RESISTOR CH 1/10W 1K	2	
R7754	ERJ6GMYG102	M.RESISTOR CH 1/10W 1K	1	
R7755	ERJ6GMYG202	M.RESISTOR CH 1/10W 2K	1	
R7756	ERJ6GMYG473	M.RESISTOR CH 1/10W 47K	1	
R7757	ERJ6GMYG101	M.RESISTOR CH 1/10W 100	1	
R7758	ERJ6GMYG273	M.RESISTOR CH 1/10W 27K	1	
R7759	ERJ6GMYJ362	M.RESISTOR CH 1/10W 3.6K	1	
R7760	ERJ6GMYG752	M.RESISTOR CH 1/10W 7.5K	1	
R7761	ERJ6GMYG272	M.RESISTOR CH 1/10W 2.7K	1	
R7762	ERJ6GMYG202	M.RESISTOR CH 1/10W 2K	1	
R7763	ERJ6GMYJ302	M.RESISTOR CH 1/10W 3K	1	
R7766-68	ERJ6GMYG101	M.RESISTOR CH 1/10W 100	3	
R7769	ERJ6GMYG273	M.RESISTOR CH 1/10W 27K	1	
R7770	ERJ6GMYG224	M.RESISTOR CH 1/10W 220K	1	
R7771	ERJ6GMYG104	M.RESISTOR CH 1/10W 100K	1	
R7772	ERDS2TJ221	C.RESISTOR 1/4W 220	1	
R7773	ERJ6GMYJ223	M.RESISTOR CH 1/10W 22K	1	
R7774	ERJ6GMYG104	M.RESISTOR CH 1/10W 100K	1	
R7775	ERJ6GMYG473	M.RESISTOR CH 1/10W 47K	1	
R7776	ERJ6GMYG472	M.RESISTOR CH 1/10W 4.7K	1	
R7777	ERJ6GMYK225	M.RESISTOR CH 1/10W 2.2M	1	
R7781	ERJ6GMYG224	M.RESISTOR CH 1/10W 220K	1	
R7782	ERJ6GMYG101	M.RESISTOR CH 1/10W 100	1	
R7785	ERJ6GMYG101	M.RESISTOR CH 1/10W 100	1	
R7786,87	ERJ6GMYJ221	M.RESISTOR CH 1/10W 220	2	
R7788	ERJ6GMYG103	M.RESISTOR CH 1/10W 10K	1	
R7789	ERJ6GMYG154	M.RESISTOR CH 1/10W 150K	1	
RX7701	EXBF9E103J	RESISTOR-RESISTOR	1	
S6001	VES0709	SWITCH	1	
T0703	EQV5EC071A	TRANSFORMER	1	
T0704	EQV5EC072A	TRANSFORMER	1	
T4002	EIQ7QF014Q	TRANSFORMER	1	
T7301	EQR7QG028P	TRANSFORMER	1	
T7304	EIS5EC017A	TRANSFORMER	1	
T7305	EQS5EC033A	TRANSFORMER	1	
⚠ TU7601	ENG47259G1	TUNER	1	[SUPPLIED FROM MBV]
VR0701	EVNCBAA00B24	V.RESISTOR 20K	1	
VR2001	EVNCYAA03B54	V.RESISTOR 50K	1	
VR3001,02	EVNCYAA03B23	V.RESISTOR 2K	2	
VR3012,13	EVNCYAA03B52	V.RESISTOR 500	2	
VR3014	EVNCYAA03B54	V.RESISTOR 50K	1	
VR4001	EVNCYAA03B15	V.RESISTOR 100K	1	
VR4501	EVMECSA00BS3	V.RESISTOR 6.8K	1	
VR4509	EVMECSA00B53	V.RESISTOR 5K	1	
VR4550	EVMECSA00B14	V.RESISTOR 10K	1	
VR7301	EVNCBAA00B53	V.RESISTOR 5K	1	
X301	VSX0162	CRYSTAL OSCILLATOR	1	
X0701	VLF1178	FILTER	1	
X0703	EFCS5R5MW5	FILTER	1	
X0704	VLF1368	FILTER	1	[SUPPLIED FROM MBV]
X6001	VSX0583	CRYSTAL OSCILLATOR	1	
X7301	EFCS5R5MS5	FILTER	1	
X7304	EFCS5R74MS5B	FILTER	1	
X7305	VSX0648	CRYSTAL OSCILLATOR	1	
X7702	VSX0353	CRYSTAL OSCILLATOR	1	
		MISCELLANEOUS		
	VMP4894	SUPPORT ANGLE	2	
	VMD2329	PHOTO TRANSISTOR HOLDER	2	
	VMD2328	REEL GUIDE	1	
	VMD2330	LED HOLDER	1	

Ref.No.	Part No.	Part Name & Description	Pcs	Remarks
	VMP4894	SUPPORT ANGLE	1	FOR DECODER C.B.A.
	VMP4471	TV DEMODULATOR ANGLE	1	FOR TV DEMODU. C.B.A.
■	VEP06B97B	MAIN C.B.A.		[SUPPLIED FROM MBV]
				(RTL)
				NV-HD620B
C301	ECUX1H101JCV	C.CAPACITOR CH 50V 100P	1	
C302	ECUX1H820JCV	C.CAPACITOR CH 50V 82P	1	
C305	ECUX1H102GCV	C.CAPACITOR CH 50V 1000P	1	[SUPPLIED FROM MBV]
C306	ECUX1H103ZFV	C.CAPACITOR CH 50V 0.01U	1	
C307	ECEA1EKA4R7	E.CAPACITOR 25V 4.7U	1	
C309	ECUX1H330JCV	C.CAPACITOR CH 50V 33P	1	
C310	ECUX1E223KBV	C.CAPACITOR CH 25V 0.022U	1	
C311	ECUM1E104KBN	C.CAPACITOR CH 25V 0.1U	1	
C312	ECUX1H680JCV	C.CAPACITOR CH 50V 68P	1	
C313	ECUX1H681GCV	C.CAPACITOR CH 50V 680P	1	[SUPPLIED FROM MBV]
C314	ECUM1H104ZFN	C.CAPACITOR CH 50V 0.1U	1	
C315	ECUX1H103ZFV	C.CAPACITOR CH 50V 0.01U	1	
C316	ECEA1HKA010	E.CAPACITOR 50V 1U	1	
C317	ECUX1C104KBV	C.CAPACITOR CH 16V 0.1U	1	
C318	ECUX1C104ZFV	C.CAPACITOR CH 16V 0.1U	1	
C319	ECUX1H222KBV	C.CAPACITOR CH 50V 2200P	1	
C320	ECUX1C333KBV	C.CAPACITOR CH 16V 0.033U	1	
C321	ECEA1HKA010	E.CAPACITOR 50V 1U	1	
C322	ECUX1H270JCV	C.CAPACITOR CH 50V 27P	1	
C323	ECUX1C104ZFV	C.CAPACITOR CH 16V 0.1U	1	
C324	ECEA0JKA101	E.CAPACITOR 6.3V 100U	1	
C325	ECUX1H103ZFV	C.CAPACITOR CH 50V 0.01U	1	
C327	ECEA0JKA101	E.CAPACITOR 6.3V 100U	1	
C328	ECUX1H080DCV	C.CAPACITOR CH 50V 8P	1	
C329	ECUX1H101JCV	C.CAPACITOR CH 50V 100P	1	
C330	ECUX1H330JCV	C.CAPACITOR CH 50V 33P	1	
C331	ECUX1H820JCV	C.CAPACITOR CH 50V 82P	1	
C332	ECUX1H681JCV	C.CAPACITOR CH 50V 680P	1	
C333	ECUX1H060DCV	C.CAPACITOR CH 50V 6P	1	
C334	ECUX1H100DCV	C.CAPACITOR CH 50V 10P	1	
C335	ECUX1H120JCV	C.CAPACITOR CH 50V 12P	1	
C336	ECUX1C104ZFV	C.CAPACITOR CH 16V 0.1U	1	
C337	ECEA1CKA100	E.CAPACITOR 16V 10U	1	
C338	ECUX1C104ZFV	C.CAPACITOR CH 16V 0.1U	1	
C339	ECUX1H470JCV	C.CAPACITOR CH 50V 47P	1	
C340	ECEA1CKA100	E.CAPACITOR 16V 10U	1	
C341	ECUX1E223KBV	C.CAPACITOR CH 25V 0.022U	1	
C342	ECEA1EKA4R7	E.CAPACITOR 25V 4.7U	1	
C343	ECEA1EKN4R7	E.CAPACITOR 25V 4.7U	1	
C344	ECUX1C104ZFV	C.CAPACITOR CH 16V 0.1U	1	
C345,46	ECUX1H103ZFV	C.CAPACITOR CH 50V 0.01U	2	
C347	ECUM1H104ZFN	C.CAPACITOR CH 50V 0.1U	1	
C348	ECEA1CKA101	E.CAPACITOR 16V 100U	1	
C349	ECUX1C104ZFV	C.CAPACITOR CH 16V 0.1U	1	
C350	ECUX1H152KBV	C.CAPACITOR CH 50V 1500P	1	
C351	ECUX1H392KBV	C.CAPACITOR CH 50V 3900P	1	
C352	ECEA0JKA470	E.CAPACITOR 6.3V 47U	1	
C353	ECUX1H221JCV	C.CAPACITOR CH 50V 220P	1	
C354	ECUX1H470JCV	C.CAPACITOR CH 50V 47P	1	
C355	ECEA0JKA221	E.CAPACITOR 6.3V 220U	1	
C356	ECUX1H103ZFV	C.CAPACITOR CH 50V 0.01U	1	
C357	ECUX1H103KBV	C.CAPACITOR CH 50V 0.01U	1	
C358	ECUX1H472KBV	C.CAPACITOR CH 50V 4700P	1	
C361	ERJ6GEY0R00	M.RESISTOR CH 1/10W 0	1	
C362	ECUX1H103ZFV	C.CAPACITOR CH 50V 0.01U	1	
C363	ECUX1H270JCV	C.CAPACITOR CH 50V 27P	1	
C365,66	ECUX1H101JCV	C.CAPACITOR CH 50V 100P	2	
C370	ECUX1C104ZFV	C.CAPACITOR CH 16V 0.1U	1	
C371	ECEA1HKA0R1	E.CAPACITOR 50V 0.1U	1	
C372,73	ECUX1C104ZFV	C.CAPACITOR CH 16V 0.1U	2	
C374	ECUX1H103ZFV	C.CAPACITOR CH 50V 0.01U	1	
C375	ECEA0JKA470	E.CAPACITOR 6.3V 47U	1	
C378	ECUX1H103ZFV	C.CAPACITOR CH 50V 0.01U	1	
C379,80	ECUX1H330JCV	C.CAPACITOR CH 50V 33P	2	
C381	ECUX1H820JCV	C.CAPACITOR CH 50V 82P	1	
C0701,02	ECUX1H103ZFV	C.CAPACITOR CH 50V 0.01U	2	
C0704	ECUX1H331JCV	C.CAPACITOR CH 50V 330P	1	
C0706	ECEA1HKA0R1	E.CAPACITOR 50V 0.1U	1	

Ref.No.	Part No.	Part Name & Description	Pcs	Remarks
C0707,08	ECUX1H103ZFV	C.CAPACITOR CH 50V 0.01U	2	
C0709	ECUX1H120JCV	C.CAPACITOR CH 50V 12P	1	
C0710	ECUX1H470JPV	C.CAPACITOR CH 50V 47P	1	
C0711	ECEA1CKA100	E.CAPACITOR 16V 10U	1	
C0712	ECUX1H103ZFV	C.CAPACITOR CH 50V 0.01U	1	
C0714	ECQB1H473JF	P.CAPACITOR 50V 0.047U	1	
C0715	ECUM1H103ZFN	C.CAPACITOR CH 50V 0.01U	1	
C0716	ECEA1CKA470	E.CAPACITOR 16V 47U	1	
C0717	ECUX1H270JPV	C.CAPACITOR CH 50V 27P	1	
C0718	ECEA1HKSR47	E.CAPACITOR 50V 0.47U	1	
C0719	ECUX1H220JCV	C.CAPACITOR CH 50V 22P	1	
C0720	ECUX1H103ZFV	C.CAPACITOR CH 50V 0.01U	1	
C0723	ECEA1HKA0R1	E.CAPACITOR 50V 0.1U	1	
C0726	ECUX1H103ZFV	C.CAPACITOR CH 50V 0.01U	1	
C0730	ECUX1H103ZFV	C.CAPACITOR CH 50V 0.01U	1	
C0732	ECUX1H103ZFV	C.CAPACITOR CH 50V 0.01U	1	
C801	ECEA1CKA100	E.CAPACITOR 16V 10U	1	
C802	ECUX1H103ZFV	C.CAPACITOR CH 50V 0.01U	1	
C803	ECEA0JKA470	E.CAPACITOR 6.3V 47U	1	
C804	ECUX1H103ZFV	C.CAPACITOR CH 50V 0.01U	1	
C805	ECUX1H050CCV	C.CAPACITOR CH 50V 5P	1	
C806	ECUX1C104ZFV	C.CAPACITOR CH 16V 0.1U	1	
C807	ECUX1H103ZFV	C.CAPACITOR CH 50V 0.01U	1	
C1001	ECEA1CGE101	E.CAPACITOR 16V 100U	1	
C1002	ECUM1H103ZFN	C.CAPACITOR CH 50V 0.01U	1	
C1003	ECEA1CGE470	E.CAPACITOR 16V 47U	1	
C1004	ECUM1H103ZFN	C.CAPACITOR CH 50V 0.01U	1	
C1005	ECEA0JKG220	E.CAPACITOR 6.3V 22U	1	
C1006	ECUM1H103ZFN	C.CAPACITOR CH 50V 0.01U	1	
C1007	ECEA0JKG101	E.CAPACITOR 6.3V 100U	1	
C1008	ECUM1H103ZFN	C.CAPACITOR CH 50V 0.01U	1	
C1009	ECEA1AKG220	E.CAPACITOR 10V 22U	1	[SUPPLIED FROM MBV]
C1010	ECEA0JKG101	E.CAPACITOR 6.3V 100U	1	
C1011	ECUM1H103ZFN	C.CAPACITOR CH 50V 0.01U	1	
C1012	ECEA0JKG101	E.CAPACITOR 6.3V 100U	1	
C1013	ECEA0JKG220	E.CAPACITOR 6.3V 22U	1	
C2001	ECUM1H104ZFN	C.CAPACITOR CH 50V 0.1U	1	
C2002,03	ECUM1H102KBN	C.CAPACITOR CH 50V 1000P	2	
C2004	ECUM1H223KBN	C.CAPACITOR CH 50V 0.022U	1	
C2005	ECUM1H104ZFN	C.CAPACITOR CH 50V 0.1U	1	
C2006	ECUM1H392KBN	C.CAPACITOR CH 50V 3900P	1	
C2007	ECUM1H472KBN	C.CAPACITOR CH 50V 4700P	1	
C2008	ECQV1H683JM	P.CAPACITOR 50V 0.068U	1	
C2009	ECEA0JKA221	E.CAPACITOR 6.3V 220U	1	
C2010	ECUM1H471JCN	C.CAPACITOR CH 50V 470P	1	
C2011	ECEA0JKA221	E.CAPACITOR 6.3V 220U	1	
C2012	ECEA1CKA100	E.CAPACITOR 16V 10U	1	
C2013	ECUM1H222KBN	C.CAPACITOR CH 50V 2200P	1	
C2014	ECUM1H103ZFN	C.CAPACITOR CH 50V 0.01U	1	
C2015	ECEA0JKA470	E.CAPACITOR 6.3V 47U	1	
C2016,17	ECEA1EKN3R3	E.CAPACITOR 25V 3.3U	2	
C2018	ECEA1EKA4R7	E.CAPACITOR 25V 4.7U	1	
C2019,20	ECUM1H102KBN	C.CAPACITOR CH 50V 1000P	2	
C2021,22	ECUM1C105ZFN	C.CAPACITOR CH 16V 1U	2	
C2023	ECUM1H222KBN	C.CAPACITOR CH 50V 2200P	1	
C2024,25	ECEA1HKA2R2	E.CAPACITOR 50V 2.2U	2	
C2026	ECEA1HKNR22	E.CAPACITOR 50V 0.22U	1	
C2027	ECA1EM470	E.CAPACITOR 25V 47U	1	
C2028	ECEA1HKA010	E.CAPACITOR 50V 1U	1	
C2029	ECA1EM470	E.CAPACITOR 25V 47U	1	
C2030,31	ECUM1H333KBN	C.CAPACITOR CH 50V 0.033U	2	
C2032	ECUM1H103ZFN	C.CAPACITOR CH 50V 0.01U	1	
C2033	ECA0JM221	E.CAPACITOR 6.3V 220U	1	
C2035	ECUM1H333KBN	C.CAPACITOR CH 50V 0.033U	1	
C2036	ECQV1H683JM	P.CAPACITOR 50V 0.068U	1	
C2037	ECUM1H104ZFN	C.CAPACITOR CH 50V 0.1U	1	
C2038-40	ECUM1H333KBN	C.CAPACITOR CH 50V 0.033U	3	
C2041,42	ECUM1H680JCN	C.CAPACITOR CH 50V 68P	2	
C2043,44	ECUM1C474ZFN	C.CAPACITOR CH 16V 0.47U	2	
C2045	ECUM1H103ZFN	C.CAPACITOR CH 50V 0.01U	1	
C2046	ECEA1HKA2R2	E.CAPACITOR 50V 2.2U	1	
C2047-49	ECEA1VKN4R7	E.CAPACITOR 35V 4.7U	3	
C2050	ECUM1H473ZFN	C.CAPACITOR CH 50V 0.047U	1	
C2051	ECEA0JKG101	E.CAPACITOR 6.3V 100U	1	
C2052	ECQV1H683JM	P.CAPACITOR 50V 0.068U	1	

Ref.No.	Part No.	Part Name & Description	Pcs	Remarks
C2053	ECEA1HKAR47	E.CAPACITOR 50V 0.47U	1	
C2054	ECUM1H101JCN	C.CAPACITOR CH 50V 100P	1	
C2055	ECEA0JKA470	E.CAPACITOR 6.3V 47U	1	
C2056	ECQV1H104JM	P.CAPACITOR 50V 0.1U	1	
C2057,58	ECEA1HKG0R1	E.CAPACITOR 50V 0.1U	2	
C2059	ECEA1HKA0R1	E.CAPACITOR 50V 0.1U	1	
C2061	ECUM1H104ZFN	C.CAPACITOR CH 50V 0.1U	1	
C3001	ECUM1H620JCN	C.CAPACITOR CH 50V 62P	1	
C3002	ECUM1H181JCN	C.CAPACITOR CH 50V 180P	1	
C3003	ECUM1H220JCN	C.CAPACITOR CH 50V 22P	1	
C3004	ECUM1H103ZFN	C.CAPACITOR CH 50V 0.01U	1	
C3006	ECUM1H103ZFN	C.CAPACITOR CH 50V 0.01U	1	
C3007	ECEA0JKA221	E.CAPACITOR 6.3V 220U	1	
C3008	ECUM1H102KBN	C.CAPACITOR CH 50V 1000P	1	
C3009	ECUM1H103ZFN	C.CAPACITOR CH 50V 0.01U	1	
C3010	ECUM1C105ZFN	C.CAPACITOR CH 16V 1U	1	
C3017,18	ECUM1H103ZFN	C.CAPACITOR CH 50V 0.01U	2	
C3019	ECUM1H620JCN	C.CAPACITOR CH 50V 62P	1	
C3021	ECUM1H104ZFN	C.CAPACITOR CH 50V 0.1U	1	
C3023	ECEA1CKA470	E.CAPACITOR 16V 47U	1	
C3024	ECUM1E333KBN	C.CAPACITOR CH 25V 0.033U	1	
C3027	ECEA0JKA470	E.CAPACITOR 6.3V 47U	1	
C3028	ECUM1H151JCN	C.CAPACITOR CH 50V 150P	1	
C3029	ECUM1H220JCN	C.CAPACITOR CH 50V 22P	1	
C3031	ECUM1H220JCN	C.CAPACITOR CH 50V 22P	1	
C3032	ECUM1H681JCN	C.CAPACITOR CH 50V 680P	1	
C3033	ECUM1H330JCN	C.CAPACITOR CH 50V 33P	1	
C3055	ECUM1H103ZFN	C.CAPACITOR CH 50V 0.01U	1	
C3057	ECUM1H180JCN	C.CAPACITOR CH 50V 18P	1	
C3061	ECUM1H104ZFN	C.CAPACITOR CH 50V 0.1U	1	
C3062	ECEA0JKA470	E.CAPACITOR 6.3V 47U	1	
C3064	ERJ6GMZ0R00	M.RESISTOR CH 1/10W 0	1	
C3065	ECUM1H104ZFN	C.CAPACITOR CH 50V 0.1U	1	
C3066	ECUM1H151JCN	C.CAPACITOR CH 50V 150P	1	
C4004	ECEA1CKA100	E.CAPACITOR 16V 10U	1	
C4005	ECCD2H181J	C.CAPACITOR 500V 180P	1	
C4006	ECEA1CKA330	E.CAPACITOR 16V 33U	1	
C4007	ECUM1H153KBN	C.CAPACITOR CH 50V 0.015U	1	
C4009	ECEA1CKA100	E.CAPACITOR 16V 10U	1	
C4010	ECUM1H104ZFN	C.CAPACITOR CH 50V 0.1U	1	
C4011	ECQP1362JZ	P.CAPACITOR 100V 3600P	1	[SUPPLIED FROM MBV]
C4017	ECUM1H102JCN	C.CAPACITOR CH 50V 1000P	1	
C4018-20	ECEA1HKA0R1	E.CAPACITOR 50V 0.1U	3	
C4021,22	ECUM1H153KBN	C.CAPACITOR CH 50V 0.015U	2	
C4023	ECUM1C105ZFN	C.CAPACITOR CH 16V 1U	1	
C4024	ECUM1H272KBN	C.CAPACITOR CH 50V 2700P	1	
C4025,26	ECEA1CKA220	E.CAPACITOR 16V 22U	2	
C4027	ECEA1HKS3R3	E.CAPACITOR 50V 3.3U	1	
C4028	ECEA1CKA470	E.CAPACITOR 16V 47U	1	
C4029,30	ECUM1H102JCN	C.CAPACITOR CH 50V 1000P	2	
C4031	ECEA1AKA101	E.CAPACITOR 10V 100U	1	
C4032	ECUM1H822KBN	C.CAPACITOR CH 50V 8200P	1	
C4033,34	ECUM1H471JCN	C.CAPACITOR CH 50V 470P	2	
C4038	ECUM1H103ZFN	C.CAPACITOR CH 50V 0.01U	1	
C4039	ECUM1H220JCN	C.CAPACITOR CH 50V 22P	1	
C4040	ECUM1H102JCN	C.CAPACITOR CH 50V 1000P	1	
C4042	ECUM1H222JCN	C.CAPACITOR CH 50V 2200P	1	
C4044	ECEA1HKA4R7	E.CAPACITOR 50V 4.7U	1	
C4501	ECUX1H681JCV	C.CAPACITOR CH 50V 680P	1	
C4502	ECUX1H561JCV	C.CAPACITOR CH 50V 560P	1	
C4503	ECUX1H102KBV	C.CAPACITOR CH 50V 1000P	1	
C4506	ECA1CAK100X	E.CAPACITOR 16V 10U	1	[SUPPLIED FROM MBV]
C4507	ECQB1H223JF	P.CAPACITOR 50V 0.022U	1	
C4508	ECA1HAK4R7X	E.CAPACITOR 50V 4.7U	1	[SUPPLIED FROM MBV]
C4509	ECA1CAK470X	E.CAPACITOR 16V 47U	1	[SUPPLIED FROM MBV]
C4510	ECQB1H103JF	P.CAPACITOR 50V 0.01U	1	
C4511	ECQB1H332JF	P.CAPACITOR 50V 3300P	1	
C4512	ECUX1H561JCV	C.CAPACITOR CH 50V 560P	1	
C4513	ECUM1H681JCN	C.CAPACITOR CH 50V 680P	1	
C4514	ECUM1H561JCN	C.CAPACITOR CH 50V 560P	1	
C4515	ECA1HAK4R7X	E.CAPACITOR 50V 4.7U	1	[SUPPLIED FROM MBV]
C4521	ECUM1H473KBN	C.CAPACITOR CH 50V 0.047U	1	
C4522	ECA1HAK4R7X	E.CAPACITOR 50V 4.7U	1	[SUPPLIED FROM MBV]
C4530	ECA0JAK470X	E.CAPACITOR 6.3V 47U	1	[SUPPLIED FROM MBV]
C4533	ECA1CAK470X	E.CAPACITOR 16V 47U	1	[SUPPLIED FROM MBV]

Ref. No.	Part No.	Part Name & Description	Pcs	Remarks
C4537	ECUM1H102JCN	C. CAPACITOR CH 50V 1000P	1	
C4538	ECA1HAKR47X	E. CAPACITOR 50V 0.47U	1	[SUPPLIED FROM MBV]
C4541	ECUM1H104ZFN	C. CAPACITOR CH 50V 0.1U	1	
C4551	ECQB1H223JF	P. CAPACITOR 50V 0.022U	1	
C4556	ECA1CAK100X	E. CAPACITOR 16V 10U	1	[SUPPLIED FROM MBV]
C4558	ECA1HAK4R7X	E. CAPACITOR 50V 4.7U	1	[SUPPLIED FROM MBV]
C4559	ECA1CAK470X	E. CAPACITOR 16V 47U	1	[SUPPLIED FROM MBV]
C4560	ECQB1H103JF	P. CAPACITOR 50V 0.01U	1	
C4561	ECQB1H332JF	P. CAPACITOR 50V 3300P	1	
C4562	ECUX1H561JCV	C. CAPACITOR CH 50V 560P	1	
C4565	ECA1HAK4R7X	E. CAPACITOR 50V 4.7U	1	[SUPPLIED FROM MBV]
C4569	ECUX1C104ZFV	C. CAPACITOR CH 16V 0.1U	1	
C4572	ECA1HAK4R7X	E. CAPACITOR 50V 4.7U	1	[SUPPLIED FROM MBV]
C4576	ECUM1H473KBN	C. CAPACITOR CH 50V 0.047U	1	
C4585, 86	ECA0JAK101X	E. CAPACITOR 6.3V 100U	2	[SUPPLIED FROM MBV]
C4587	ECUM1H103ZFN	C. CAPACITOR CH 50V 0.01U	1	
C4591	ECUM1H104ZFN	C. CAPACITOR CH 50V 0.1U	1	
C4592	ECUX1H102KBV	C. CAPACITOR CH 50V 1000P	1	
C4673	ECUX1C104ZFV	C. CAPACITOR CH 16V 0.1U	1	
C4674	ECUM1H104ZFN	C. CAPACITOR CH 50V 0.1U	1	
C4676	ECA1VAK470XQ	E. CAPACITOR 35V 47U	1	[SUPPLIED FROM MBV]
C4677	ECA1CAK470X	E. CAPACITOR 16V 47U	1	[SUPPLIED FROM MBV]
C6001	ECUM1H104ZFN	C. CAPACITOR CH 50V 0.1U	1	
C6002	ECUM1C224ZFN	C. CAPACITOR CH 16V 0.22U	1	
C6003	ECEA1HKA2R2	E. CAPACITOR 50V 2.2U	1	
C6004	ECUM1H103ZFN	C. CAPACITOR CH 50V 0.01U	1	
C6005	ECEA0JKA470	E. CAPACITOR 6.3V 47U	1	
C6006	ECUM1H104ZFN	C. CAPACITOR CH 50V 0.1U	1	
C6007	ECEA0JKA101	E. CAPACITOR 6.3V 100U	1	
C6008	ECUM1H270JCN	C. CAPACITOR CH 50V 27P	1	
C6009	ECUM1H150JCN	C. CAPACITOR CH 50V 15P	1	
C6010	ECUM1H104ZFN	C. CAPACITOR CH 50V 0.1U	1	
C6013, 14	ECUM1H271JCN	C. CAPACITOR CH 50V 270P	2	
C6015	ECEA1CKA100	E. CAPACITOR 16V 10U	1	
C6016	ECUM1H104ZFN	C. CAPACITOR CH 50V 0.1U	1	
C6018	ECUM1H104ZFN	C. CAPACITOR CH 50V 0.1U	1	
C7301, 02	ECUX1H103ZFV	C. CAPACITOR CH 50V 0.01U	2	
C7303	ECEA1CKA470	E. CAPACITOR 16V 47U	1	
C7304	ECUX1H103ZFV	C. CAPACITOR CH 50V 0.01U	1	
C7305	ECEA1CKA220	E. CAPACITOR 16V 22U	1	
C7306	ECUX1H391JCV	C. CAPACITOR CH 50V 390P	1	
C7309-12	ECUX1H103ZFV	C. CAPACITOR CH 50V 0.01U	4	
C7313	ECEA0JKA220	E. CAPACITOR 6.3V 22U	1	
C7314	ECUX1H103ZFV	C. CAPACITOR CH 50V 0.01U	1	
C7315	ECEA1EKA4R7	E. CAPACITOR 25V 4.7U	1	
C7317, 18	ECUX1H040CCV	C. CAPACITOR CH 50V 4P	2	
C7320	ECEA0JKA101	E. CAPACITOR 6.3V 100U	1	
C7321	ECUX1H103ZFV	C. CAPACITOR CH 50V 0.01U	1	
C7322	ECEA1EKA4R7	E. CAPACITOR 25V 4.7U	1	
C7323, 24	ECUX1H391JCV	C. CAPACITOR CH 50V 390P	2	
C7325, 26	ECEA1CKA100	E. CAPACITOR 16V 10U	2	
C7327	ECUX1C104ZFV	C. CAPACITOR CH 16V 0.1U	1	
C7328	ECEA1CKA470	E. CAPACITOR 16V 47U	1	
C7329, 30	ECUX1H471JCV	C. CAPACITOR CH 50V 470P	2	
C7331	ECEA1CKA100	E. CAPACITOR 16V 10U	1	
C7332, 33	ECUX1C104ZFV	C. CAPACITOR CH 16V 0.1U	2	
C7334	ECEA0JKA101	E. CAPACITOR 6.3V 100U	1	
C7335	ECUX1C104ZFV	C. CAPACITOR CH 16V 0.1U	1	
C7338	ECUM1H471JCN	C. CAPACITOR CH 50V 470P	1	
C7339	ECUM1H182KBM	C. CAPACITOR CH 50V 1800P	1	
C7340	ECUM1H270JCN	C. CAPACITOR CH 50V 27P	1	
C7341	ECEA1CKA100	E. CAPACITOR 16V 10U	1	
C7342	ECUM1H561JCN	C. CAPACITOR CH 50V 560P	1	
C7343	ECEA1HKA010	E. CAPACITOR 50V 1U	1	
C7344	ECUM1H471JCN	C. CAPACITOR CH 50V 470P	1	
C7345	ECUM1H182KBM	C. CAPACITOR CH 50V 1800P	1	
C7346	ECUM1H270JCN	C. CAPACITOR CH 50V 27P	1	
C7347	ECEA1CKA100	E. CAPACITOR 16V 10U	1	
C7348	ECUM1H561JCN	C. CAPACITOR CH 50V 560P	1	
C7350	ECEA1HKA010	E. CAPACITOR 50V 1U	1	
C7351	ECUM1H471JCN	C. CAPACITOR CH 50V 470P	1	
C7352	ECUM1H182KBM	C. CAPACITOR CH 50V 1800P	1	
C7353	ECUM1H270JCN	C. CAPACITOR CH 50V 27P	1	
C7354	ECEA1CKA100	E. CAPACITOR 16V 10U	1	
C7355	ECUM1H561JCN	C. CAPACITOR CH 50V 560P	1	

Ref. No.	Part No.	Part Name & Description	Pcs	Remarks
C7357	ECUX1C104ZFV	C. CAPACITOR CH 16V 0.1U	1	
C7358	ECEA1HKA3R3	E. CAPACITOR 50V 3.3U	1	
C7359	ECUX1C104ZFV	C. CAPACITOR CH 16V 0.1U	1	
C7365	ECEA1HKA010	E. CAPACITOR 50V 1U	1	
C7369	ECEA0JKA470	E. CAPACITOR 6.3V 47U	1	
C7370	ECUX1C104ZFV	C. CAPACITOR CH 16V 0.1U	1	
C7371, 72	ECUX1H103ZFV	C. CAPACITOR CH 50V 0.01U	2	
C7374, 75	ECUX1H150JCV	C. CAPACITOR CH 50V 15P	2	
C7601	ECUM1H103ZFN	C. CAPACITOR CH 50V 0.01U	1	
C7604	ECEA0JKA101	E. CAPACITOR 6.3V 100U	1	
C7605	ECUM1H104ZFN	C. CAPACITOR CH 50V 0.1U	1	
C7606	ECEA1CKA101	E. CAPACITOR 16V 100U	1	
C7608	ERJ6GMZOR00	M. RESISTOR CH 1/10W 0	1	
C7609	ECEA0JKA101	E. CAPACITOR 6.3V 100U	1	
C7610	ECUM1H103ZFN	C. CAPACITOR CH 50V 0.01U	1	
C7612	ECEA0JKA101	E. CAPACITOR 6.3V 100U	1	
C7614	ECEA1HKA100	E. CAPACITOR 50V 10U	1	
C7615	ECEA1HKA010	E. CAPACITOR 50V 1U	1	
C7616	ECUM1E104KBN	C. CAPACITOR CH 25V 0.1U	1	
C7617	ECEA1AKS221	E. CAPACITOR 10V 220U	1	
C7701	ECUM1H150JCN	C. CAPACITOR CH 50V 15P	1	
C7702	ECUM1H080DCN	C. CAPACITOR CH 50V 8P	1	
C7706	ECUM1H103ZFN	C. CAPACITOR CH 50V 0.01U	1	
C7708-10	ECUM1H104ZFN	C. CAPACITOR CH 50V 0.1U	3	
C7712	ECEA0JKA470	E. CAPACITOR 6.3V 47U	1	
C7713	ECEA1EKA4R7	E. CAPACITOR 25V 4.7U	1	
C7714	ECEA0JKA101	E. CAPACITOR 6.3V 100U	1	
C7715	ECEA1CKA100	E. CAPACITOR 16V 10U	1	
C7716	ECUM1H120JCN	C. CAPACITOR CH 50V 12P	1	
C7718	ECUX1H561JCN	C. CAPACITOR CH 50V 560P	1	
C7721	ECUM1H103ZFN	C. CAPACITOR CH 50V 0.01U	1	
C7723	ECUM1H104ZFN	C. CAPACITOR CH 50V 0.1U	1	
C7724	ECEA0JKA470	E. CAPACITOR 6.3V 47U	1	
C7726	ECEA0JKA470	E. CAPACITOR 6.3V 47U	1	
C7729	ECUM1H104ZFN	C. CAPACITOR CH 50V 0.1U	1	
C7730	ECUM1H820JCN	C. CAPACITOR CH 50V 82P	1	
C7731	ECUM1H104ZFN	C. CAPACITOR CH 50V 0.1U	1	
C7732	ECUM1H102JCN	C. CAPACITOR CH 50V 1000P	1	
C7734	ECUM1H104ZFN	C. CAPACITOR CH 50V 0.1U	1	
C7736	ECUM1H104ZFN	C. CAPACITOR CH 50V 0.1U	1	
C7737	ECEA0JKA470	E. CAPACITOR 6.3V 47U	1	
C7738, 39	ECUM1H104ZFN	C. CAPACITOR CH 50V 0.1U	2	
C7743	ECUM1H104ZFN	C. CAPACITOR CH 50V 0.1U	1	
C7747	ECUM1H104ZFN	C. CAPACITOR CH 50V 0.1U	1	
C7752	ECEA1HKA2R2	E. CAPACITOR 50V 2.2U	1	
C7753, 54	ECUM1H221JCN	C. CAPACITOR CH 50V 220P	2	
C7755-57	ECUM1H104ZFN	C. CAPACITOR CH 50V 0.1U	3	
C7759, 60	ECUM1H101JCN	C. CAPACITOR CH 50V 100P	2	
D302, 03	1SS355	DIODE	2	
D314	1SS355	DIODE	1	
D318	1SS355	DIODE	1	
D319	MA151K	DIODE	1	
D320	MA151WK	DIODE	1	
D321	1SS355	DIODE	1	
D802-04	1SS355	DIODE	3	
D1001	MA4051-L	DIODE	1	
D1003	MA4120-M	DIODE	1	
D1004	MA4051-L	DIODE	1	
D1005	1SS355	DIODE	1	
D1007, 08	1SS355	DIODE	2	
D1009	1SS254	DIODE	1	
D2001	MA153	DIODE	1	
D2002	MA151K	DIODE	1	
D2003-05	1SS355	DIODE	3	
D2006, 07	MA700	DIODE	2	
D2008, 09	MA185	DIODE	2	
D2010-13	1SS355	DIODE	4	
D3001, 02	1SS254	DIODE	2	
D3005	MA723-VT	DIODE	1	
D4003-05	1SS254	DIODE	3	
D4007	ERDS2TJ102	C. RESISTOR 1/4W 1K	1	
D4504	1SS254	DIODE	1	
D6001	LN59LT. VT	LED	1	
D6002	MA4075-L	DIODE	1	

Ref. No.	Part No.	Part Name & Description	Pcs	Remarks
D6003	MA151K	DIODE	1	
D7301	MA3082-L	DIODE	1	
D7302	MA151K	DIODE	1	
D7303	MA151WK	DIODE	1	
D7304	MA717	DIODE	1	
D7306	MA151WK	DIODE	1	
D7601	MA4300-M	DIODE	1	
D7704	MA700A	DIODE	1	
D7705	1SS254	DIODE	1	
D7707	1SS254	DIODE	1	
FL7301, 02	VLF0633	FILTER	2	
IC301	TDA9725V2	IC	1	[SUPPLIED FROM MBV]
IC302	TL8850AF	IC	1	
IC0701	LA7576	IC	1	
IC1001	HA17431PA	IC	1	
IC2001	BA6887-V3	IC	1	
IC2002	BA6871BS	IC	1	
IC2003	AN3814K	IC	1	
IC4001	BA7795FS	IC	1	
IC4501	BH7778AK	IC	1	
IC6001	MN675536VR9Y	IC	1	[SUPPLIED FROM MBV]
IC6002, 03	ON1387	PHOTO INTERRUPTER	2	
IC7301	MSP3410B-F7	IC	1	[SUPPLIED FROM MBV]
IC7302	PST7043	IC	1	
IC7303	M5238FP	IC	1	
IC7304	HA17431PA	IC	1	
IC7305	MN155402VZDB	IC	1	
IC7306	PST7043	IC	1	
IC7701	M27C1001BAAA	IC	1	[SUPPLIED FROM MBV]
IC7702	MC74HCT573AW	IC	1	[SUPPLIED FROM MBV]
IC7703	NJM2535M	IC	1	[SUPPLIED FROM MBV]
IC7704	ST24W16FB6	IC	1	[SUPPLIED FROM MBV]
IC7706	SABC513AL16P	IC	1	[SUPPLIED FROM MBV]
IC7708	SAA5281ZPM3	IC	1	
IC7712	MC74HCT74AD	IC	1	[SUPPLIED FROM MBV]
K309	ERJ6GEY0R00	M. RESISTOR CH 1/10W 0	1	
K310	ERJ3GEY0R00	M. RESISTOR CH 1/16W 0	1	
K319	ERJ3GEY0R00	M. RESISTOR CH 1/16W 0	1	
K0702	ERJ3GEY0R00	M. RESISTOR CH 1/16W 0	1	
K0704, 05	ERJ3GEY0R00	M. RESISTOR CH 1/16W 0	2	
K1001	ERJ6GMZ0R00	M. RESISTOR CH 1/10W 0	1	
K3001	ERJ6GMZ0R00	M. RESISTOR CH 1/10W 0	1	
K3005	ERJ6GMZ0R00	M. RESISTOR CH 1/10W 0	1	
K3014, 15	ERJ6GMZ0R00	M. RESISTOR CH 1/10W 0	2	
K4002	ERJ6GMZ0R00	M. RESISTOR CH 1/10W 0	1	
K4004	ERJ6GMZ0R00	M. RESISTOR CH 1/10W 0	1	
K4502-06	ERJ3GEY0R00	M. RESISTOR CH 1/16W 0	5	
K6003	ERJ6GMZ0R00	M. RESISTOR CH 1/10W 0	1	
K6006, 07	ERJ6GMZ0R00	M. RESISTOR CH 1/10W 0	2	
K7305-07	ERJ3GEY0R00	M. RESISTOR CH 1/16W 0	3	
K7314	ERJ3GEY0R00	M. RESISTOR CH 1/16W 0	1	
K7317	ERJ3GEY0R00	M. RESISTOR CH 1/16W 0	1	
K7619	ERJ6GMZ0R00	M. RESISTOR CH 1/10W 0	1	
K7621	ERJ6GMZ0R00	M. RESISTOR CH 1/10W 0	1	
K7624	ERJ6GMZ0R00	M. RESISTOR CH 1/10W 0	1	
K7625	ERJ6GEY0R00	M. RESISTOR CH 1/10W 0	1	
K7709	ERJ6GMZ0R00	M. RESISTOR CH 1/10W 0	1	
K7712	ERJ6GMZ0R00	M. RESISTOR CH 1/10W 0	1	
K7714	ERJ6GMZ0R00	M. RESISTOR CH 1/10W 0	1	
L301	VLQ0599J151	COIL 150UH	1	
L302, 03	VLQ0599J100	COIL 10UH	2	
L304	VLQ0599J390	COIL 39UH	1	
L305	VLQ0599J470	COIL 47UH	1	
L306	VLQ0599J101	COIL 100UH	1	
L307	VLQ0599J270	COIL 27UH	1	
L308	VLQ0599J100	COIL 10UH	1	
L309	VLQ0599J470	COIL 47UH	1	
L311, 12	VLQ0599J680	COIL 68UH	2	
L313, 14	VLQ0599J390	COIL 39UH	2	
L315	VLQ0599J101	COIL 100UH	1	
L0701	VLQ0163JR33	COIL 0.33UH	1	

Ref. No.	Part No.	Part Name & Description	Pcs	Remarks
L0705	VLQ0163J2R7	COIL 2.7UH	1	
L0706	VLQEL05S8R2K	COIL 8.2UH	1	
L801	VLQ0599J101	COIL 100UH	1	
L2001	VLP0083	COIL	1	
L3001	VLQ0599J820	COIL 82UH	1	
L3002	VLQ0599J151	COIL 150UH	1	
L3003	VLQ0599J6R8	COIL 6.8UH	1	
L3004	VLQ0599J120	COIL 12UH	1	
L3006	VLQ0599J101	COIL 100UH	1	
L3008	VLQ0599J270	COIL 27UH	1	
L3009	VLQ0599J680	COIL 68UH	1	
L3012	VLQ0599J680	COIL 68UH	1	
L4002	ELESN471KA	INDUCTOR 470UH	1	
L4003	VLQ0599J680	COIL 68UH	1	
L4005, 06	ERJ6GMZ0R00	M. RESISTOR CH 1/10W 0	2	
L4007	VLQ0123	COIL	1	
L6001	VLQ0599J101	COIL 100UH	1	
L6002	VLP0083	COIL	1	
L6003, 04	VLQ0599J680	COIL 68UH	2	
L7301	ELEXH100JBV	INDUCTOR 10UH	1	
L7302	ERJ6GEY0R00	M. RESISTOR CH 1/10W 0	1	
L7603, 04	VLQ0599J680	COIL 68UH	2	
L7606	VLQ0599J180	COIL 18UH	1	
L7607, 08	VLQ0599J330	COIL 33UH	2	
L7702	VLQ0599J3R3	COIL 3.3UH	1	
L7704	VLQ0599J100	COIL 10UH	1	
L7705	VLQ0599J101	COIL 100UH	1	
L7707	VLQ0599J120	COIL 12UH	1	
LB303-06	VLP0145	COIL	4	
LB307-11	ERJ6GEY0R00	M. RESISTOR CH 1/10W 0	5	
LB312	VLP0145	COIL	1	
LB1001	VLP0125	COIL	1	
LB3001	VLP0083	COIL	1	
P2001	VJS3640A002	CONNECTOR (FEMALE) 2P	1	
P2002	VJS3537A015G	CONNECTOR (FEMALE) 15P	1	
P2003	VJP3483	CONNECTOR (MALE)	1	
P2005	VJS3537A009G	CONNECTOR (FEMALE) 9P	1	
P3002	VJS3537A020G	CONNECTOR (FEMALE) 20P	1	
P4002	VJS3675E006G	CONNECTOR (FEMALE) 6P	1	
P4003	VJP1230T	CONNECTOR (MALE) 3P	1	
P6001	VJS3639A004	CONNECTOR (FEMALE) 4P	1	
PK301	VJR0776B010W	CONNECTOR (MALE) 10P	1	[SUPPLIED FROM MBV]
PK302	VJR0776B011W	CONNECTOR (MALE) 11P	1	[SUPPLIED FROM MBV]
PK303	VJR0776B012W	CONNECTOR (MALE) 12P	1	[SUPPLIED FROM MBV]
PK304	VJR0776B003W	CONNECTOR (MALE) 3P	1	
PK0701	VJR0816E010W	CONNECTOR (MALE) 10P	1	
PK4501	VJR0777B008W	CONNECTOR (MALE) 8P	1	
PK4502, 03	VJR0777B010W	CONNECTOR (MALE) 10P	2	
PK7301	VJR0777B009W	CONNECTOR (MALE) 9P	1	
PK7302	VJR0777B008W	CONNECTOR (MALE) 8P	1	
PP0701	VJP3589A004B	CONNECTOR (MALE) 4P	1	
PP3002	VJP3042G013W	CONNECTOR (MALE) 13P	1	
PP3003	VJP3042G005W	CONNECTOR (MALE) 5P	1	
PP3004	VJP3042G008W	CONNECTOR (MALE) 8P	1	
PP3005	VJP3042G010W	CONNECTOR (MALE) 10P	1	
PS3001	VJS3673F005G	CONNECTOR (FEMALE) 5P	1	[SUPPLIED FROM MBV]
PS3006	VJS3631A011A	CONNECTOR (FEMALE) 11P	1	
PS6002	VJS3673B025G	CONNECTOR (FEMALE) 25P	1	
Q301, 02	MSD601	TRANSISTOR	2	
Q305	MSD601	TRANSISTOR	1	
Q306	MSB709	TRANSISTOR	1	
Q307	MSB709-R	TRANSISTOR	1	
Q308	MSB709	TRANSISTOR	1	
Q309	MSC2295	TRANSISTOR	1	
Q0701	MSD601-S	TRANSISTOR	1	
Q0702	MSB709-R	TRANSISTOR	1	
Q801	MSB709	TRANSISTOR	1	
Q803	MSC2295	TRANSISTOR	1	
Q804	MSB709	TRANSISTOR	1	

Ref. No.	Part No.	Part Name & Description	Pcs	Remarks
Q805	MSD601	TRANSISTOR	1	
Q1001	MSD601	TRANSISTOR	1	
Q1002-04	2SD1996-S	TRANSISTOR	3	
Q1005	2SD602A	TRANSISTOR	1	
Q1007	2SD25440PQA	TRANSISTOR	1	
Q3001	MSC2295	TRANSISTOR	1	
Q3002	MSB709	TRANSISTOR	1	
Q3003, 04	MSD601	TRANSISTOR	2	
Q3005	MSC2295	TRANSISTOR	1	
Q3006	MSB709	TRANSISTOR	1	
Q3007	MSC2295	TRANSISTOR	1	
Q3010	MSB709-R	TRANSISTOR	1	
Q3023	MSC2295	TRANSISTOR	1	
Q3024	MSD601	TRANSISTOR	1	
Q3025	MSC2295	TRANSISTOR	1	
Q4005	2SB1320A-R	TRANSISTOR	1	
Q4006	2SD602A-R	TRANSISTOR	1	
Q4007-09	MSD601-R	TRANSISTOR	3	
Q4501	2SD1468	TRANSISTOR	1	
Q4551	2SA1515	TRANSISTOR	1	
Q6001	MSB709	TRANSISTOR	1	
Q6002, 03	PN205LT-NCVT	PHOTO TRANSISTOR	2	
Q7301, 02	2SD1996	TRANSISTOR	2	
Q7304	2SC2404	TRANSISTOR	1	
Q7305	MSD601-S	TRANSISTOR	1	
Q7308	2SB709A	TRANSISTOR	1	
Q7310	2SB709A	TRANSISTOR	1	
Q7311-13	MSD1328-S	TRANSISTOR	3	
Q7601	XN4601	TRANSISTOR-TRANSISTOR	1	
Q7603	2SB710A	TRANSISTOR	1	
Q7701-03	MSB709	TRANSISTOR	3	
Q7705	MSD601	TRANSISTOR	1	
Q7706	MSB709	TRANSISTOR	1	
Q7709-12	MSD601	TRANSISTOR	4	
QR302	MUN2113	TRANSISTOR-RESISTOR	1	
QR305	MUN2213	TRANSISTOR-RESISTOR	1	
QR317	MUN2213	TRANSISTOR-RESISTOR	1	
QR801	MUN2213	TRANSISTOR-RESISTOR	1	
QR1001, 02	MUN2113	TRANSISTOR-RESISTOR	2	
QR1003	MUN2213	TRANSISTOR-RESISTOR	1	
QR3001	MUN2111	TRANSISTOR-RESISTOR	1	
QR3002, 03	DTC363EK	TRANSISTOR-RESISTOR	2	
QR3027	MUN2212	TRANSISTOR-RESISTOR	1	
QR4001	MUN2212	TRANSISTOR-RESISTOR	1	
QR6001	XN1211	TRANSISTOR-RESISTOR	1	
QR6002	UN2114	TRANSISTOR-RESISTOR	1	
QR6004	XN1213	TRANSISTOR-RESISTOR	1	
QR7301	MUN2213	TRANSISTOR-RESISTOR	1	
QR7302	MUN2112	TRANSISTOR-RESISTOR	1	
QR7601	MUN2213	TRANSISTOR-RESISTOR	1	
QR7602	MUN2212	TRANSISTOR-RESISTOR	1	
QR7603	MUN2213	TRANSISTOR-RESISTOR	1	
R303	ERJ3GEYJ182	M. RESISTOR CH 1/16W 1.8K	1	
R304	ERJ3GEYJ225	M. RESISTOR CH 1/16W 2.2M	1	
R305	ERJ3GEYG682	M. RESISTOR CH 1/16W 6.8K	1	
R307	ERJ3GEYJ271	M. RESISTOR CH 1/16W 270	1	
R308	ERJ3GEYG102	M. RESISTOR CH 1/16W 1K	1	
R309	ERJ3GEYJ271	M. RESISTOR CH 1/16W 270	1	
R310, 11	ERJ3GEYG152	M. RESISTOR CH 1/16W 1.5K	2	
R312	ERJ3GEYG472	M. RESISTOR CH 1/16W 4.7K	1	
R313	ERJ3GEYJ473	M. RESISTOR CH 1/16W 47K	1	
R314	ERJ3GEYJ683	M. RESISTOR CH 1/16W 68K	1	
R315	ERJ3GEYJ223	M. RESISTOR CH 1/16W 22K	1	
R316	ERJ3GEYJ103	M. RESISTOR CH 1/16W 10K	1	
R317	ERJ3GEYG472	M. RESISTOR CH 1/16W 4.7K	1	
R319	ERJ3GEYJ183	M. RESISTOR CH 1/16W 18K	1	
R320	ERJ3GEYJ821	M. RESISTOR CH 1/16W 820	1	
R321	ERJ3GEYJ120	M. RESISTOR CH 1/16W 12	1	
R322	ERJ3GEYJ223	M. RESISTOR CH 1/16W 22K	1	
R323	ERJ3GEYG102	M. RESISTOR CH 1/16W 1K	1	
R324, 25	ERJ3GEYJ103	M. RESISTOR CH 1/16W 10K	2	
R326	ERJ3GEYJ242	M. RESISTOR CH 1/16W 2.4K	1	
R327	ERJ3GEYG102	M. RESISTOR CH 1/16W 1K	1	

Ref. No.	Part No.	Part Name & Description	Pcs	Remarks
R328	ERJ3GEYJ272	M. RESISTOR CH 1/16W 2.7K	1	
R329	ERJ3GEYJ182	M. RESISTOR CH 1/16W 1.8K	1	
R330	ERJ3GEYJ122	M. RESISTOR CH 1/16W 1.2K	1	
R332	ERJ3GEYJ390	M. RESISTOR CH 1/16W 39	1	
R333	ERJ3GEYJ561	M. RESISTOR CH 1/16W 560	1	
R335	ERJ3GEYJ122	M. RESISTOR CH 1/16W 1.2K	1	
R337	ERJ3GEYJ561	M. RESISTOR CH 1/16W 560	1	
R338	ERJ3GEYG471	M. RESISTOR CH 1/16W 470	1	
R339	ERJ3GEYJ333	M. RESISTOR CH 1/16W 33K	1	
R340	ERJ3GEYJ182	M. RESISTOR CH 1/16W 1.8K	1	
R341	ERJ3GEYJ101	M. RESISTOR CH 1/16W 100	1	
R344	ERJ3GEYJ473	M. RESISTOR CH 1/16W 47K	1	
R347	ERJ3GEYJ473	M. RESISTOR CH 1/16W 47K	1	
R353	ERJ3GEYG102	M. RESISTOR CH 1/16W 1K	1	
R354	ERJ3GEYJ681	M. RESISTOR CH 1/16W 680	1	
R355	ERJ3GEYJ331	M. RESISTOR CH 1/16W 330	1	
R356, 57	ERJ3GEYJ821	M. RESISTOR CH 1/16W 820	2	
R359	ERJ3GEYG102	M. RESISTOR CH 1/16W 1K	1	
R360	ERJ3GEYJ221	M. RESISTOR CH 1/16W 220	1	
R369	ERJ3GEYJ393	M. RESISTOR CH 1/16W 39K	1	
R374	ERJ3GEYG102	M. RESISTOR CH 1/16W 1K	1	
R375	ERJ3GEYJ101	M. RESISTOR CH 1/16W 100	1	
R376	ERJ3GEYJ470	M. RESISTOR CH 1/16W 47	1	
R0702	ERJ3GEYJ272	M. RESISTOR CH 1/16W 2.7K	1	
R0704	ERJ3GEYJ222	M. RESISTOR CH 1/16W 2.2K	1	
R0705	ERJ3GEYJ562	M. RESISTOR CH 1/16W 5.6K	1	
R0706, 07	ERJ3GEYJ272	M. RESISTOR CH 1/16W 2.7K	2	
R0708	ERJ3GEYG152	M. RESISTOR CH 1/16W 1.5K	1	
R0709	ERJ3GEYJ105	M. RESISTOR CH 1/16W 1M	1	
R0710	ERJ6GEYG154	M. RESISTOR CH 1/10W 150K	1	
R0713	ERJ3GEYJ181	M. RESISTOR CH 1/16W 180	1	
R0714	ERJ3GEYJ470	M. RESISTOR CH 1/16W 47	1	
R0715	ERJ3GEYJ183	M. RESISTOR CH 1/16W 18K	1	
R0716	VRE0040E151	M. RESISTOR CH 1/10W 150	1	
R0717	ERJ3GEYJ330	M. RESISTOR CH 1/16W 33	1	
R0718	ERJ3GEYG102	M. RESISTOR CH 1/16W 1K	1	
R0719	ERJ6GEYF822	M. RESISTOR CH 1/10W 8.2K	1	
R0720	ERJ3GEYG102	M. RESISTOR CH 1/16W 1K	1	
R0722	ERJ3GEYJ101	M. RESISTOR CH 1/16W 100	1	
R0728	ERJ3GEYG471	M. RESISTOR CH 1/16W 470	1	
R0729	ERJ3GEYG102	M. RESISTOR CH 1/16W 1K	1	
R0732	ERJ3GEYG471	M. RESISTOR CH 1/16W 470	1	
R0783	ERJ3GEYJ393	M. RESISTOR CH 1/16W 39K	1	
R801	ERJ3GEYJ222	M. RESISTOR CH 1/16W 2.2K	1	
R802	ERJ3GEYG681	M. RESISTOR CH 1/16W 680	1	
R803	ERJ3GEYG182	M. RESISTOR CH 1/16W 1.8K	1	
R810	ERJ3GEYJ103	M. RESISTOR CH 1/16W 10K	1	
R811	ERJ3GEYJ273	M. RESISTOR CH 1/16W 27K	1	
R812	ERJ3GEYJ563	M. RESISTOR CH 1/16W 56K	1	
R813	ERJ3GEYG561	M. RESISTOR CH 1/16W 560	1	
R814	ERJ3GEYG103	M. RESISTOR CH 1/16W 10K	1	
R815	ERJ3GEYG681	M. RESISTOR CH 1/16W 680	1	
R816	ERJ3GEYG181	M. RESISTOR CH 1/16W 180	1	
R817	ERJ3GEYG101	M. RESISTOR CH 1/16W 100	1	[SUPPLIED FROM MBV]
R818	ERJ3GEYG242	M. RESISTOR CH 1/16W 2.4K	1	
R1001	ERJ6GMYG333	M. RESISTOR CH 1/10W 33K	1	
R1002	ERDS2TJ102	C. RESISTOR 1/4W 1K	1	
R1003	ERJ6GMYG272	M. RESISTOR CH 1/10W 2.7K	1	
R1004	ERJ6GMYJ363	M. RESISTOR CH 1/10W 36K	1	
R1005	ERJ6GMYG272	M. RESISTOR CH 1/10W 2.7K	1	
R1006	ERDS2TJ122	C. RESISTOR 1/4W 1.2K	1	
R1007	ERJ6GMYG102	M. RESISTOR CH 1/10W 1K	1	
R1008	ERJ6GMYG333	M. RESISTOR CH 1/10W 33K	1	
R1009, 10	ERJ6GMYG562	M. RESISTOR CH 1/10W 5.6K	2	
R1011	ERDS1TJ272	C. RESISTOR 1/2W 2.7K	1	
R2001	ERJ6GMYG913	M. RESISTOR CH 1/10W 91K	1	
R2002-04	ERJ6GMYG102	M. RESISTOR CH 1/10W 1K	3	
R2005	ERX1SJ1R8	M. RESISTOR 1W 1.8	1	
R2006	ERJ6GMYG512	M. RESISTOR CH 1/10W 5.1K	1	
R2007	ERJ6GMYG222	M. RESISTOR CH 1/10W 2.2K	1	
R2009, 10	ERJ6GMYG103	M. RESISTOR CH 1/10W 10K	2	
R2011	ERJ6GMYG102	M. RESISTOR CH 1/10W 1K	1	
R2012	ERJ6GMYJ221	M. RESISTOR CH 1/10W 220	1	
R2013	ERJ6GMYG272	M. RESISTOR CH 1/10W 2.7K	1	
R2014, 15	ERJ6GMYJ223	M. RESISTOR CH 1/10W 22K	2	

Ref. No.	Part No.	Part Name & Description	Pcs	Remarks
R2016	ERJ6GMYG222	M. RESISTOR CH 1/10W 2.2K	1	
R2017, 18	ERJ6GMYJ223	M. RESISTOR CH 1/10W 22K	2	
R2019	ERJ6GMYG103	M. RESISTOR CH 1/10W 10K	1	
R2020	ERJ6GMYG471	M. RESISTOR CH 1/10W 470	1	
R2021	ERJ6GMYG103	M. RESISTOR CH 1/10W 10K	1	
R2022	ERJ6GMYG222	M. RESISTOR CH 1/10W 2.2K	1	
R2023	EROS2CKG8200	M. RESISTOR 1/4W 820	1	
R2024	EROS2CKG6800	M. RESISTOR 1/4W 680	1	
R2025	ERJ6GMYG102	M. RESISTOR CH 1/10W 1K	1	
R2026, 27	ERDS2TJ560	C. RESISTOR 1/4W 56	2	
R2028	ERDS1TJ561	C. RESISTOR 1/2W 560	1	
R2029	ERJ6GMYG222	M. RESISTOR CH 1/10W 2.2K	1	
R2030	ERJ6GMYG432	M. RESISTOR CH 1/10W 4.3K	1	
R2031	ERJ6GMYG473	M. RESISTOR CH 1/10W 47K	1	
R2032	ERJ6GMYG103	M. RESISTOR CH 1/10W 10K	1	
R2033	ERJ6GMYJ684	M. RESISTOR CH 1/10W 680K	1	
R2034	ERJ6GMYG133	M. RESISTOR CH 1/10W 13K	1	
R2035	ERJ6GMYJ105	M. RESISTOR CH 1/10W 1M	1	
R2036, 37	ERJ6GMYG472	M. RESISTOR CH 1/10W 4.7K	2	
R2038	ERJ6GMYG102	M. RESISTOR CH 1/10W 1K	1	
R2039, 40	ERJ6GMYJ105	M. RESISTOR CH 1/10W 1M	2	
R2041, 42	ERJ6GMYG392	M. RESISTOR CH 1/10W 3.9K	2	
R2043	ERDS2TJ560	C. RESISTOR 1/4W 56	1	
R2044	ERX12SJR47	M. RESISTOR 1/2W 0.47	1	
R2045	ERDS2FJ1R5	C. RESISTOR 1/4W 1.5	1	
R2046-48	ERDS2TJ330	C. RESISTOR 1/4W 33	3	
R2049	ERDS2FJ1R2	C. RESISTOR 1/4W 1.2	1	
R2050, 51	ERJ6GMYG332	M. RESISTOR CH 1/10W 3.3K	2	
R2052	ERDS2TJ122	C. RESISTOR 1/4W 1.2K	1	
R3001	ERJ6GMYG561	M. RESISTOR CH 1/10W 560	1	
R3002	ERJ6GMYG472	M. RESISTOR CH 1/10W 4.7K	1	
R3003	ERJ6GMYG222	M. RESISTOR CH 1/10W 2.2K	1	
R3004	ERJ6GMYG272	M. RESISTOR CH 1/10W 2.7K	1	
R3005	ERJ6GMYG332	M. RESISTOR CH 1/10W 3.3K	1	
R3006	ERDS2TJ472	C. RESISTOR 1/4W 4.7K	1	
R3007	ERJ6GMYG681	M. RESISTOR CH 1/10W 680	1	
R3008	ERJ6GMYG222	M. RESISTOR CH 1/10W 2.2K	1	
R3009	ERJ6GMYG392	M. RESISTOR CH 1/10W 3.9K	1	
R3012	ERJ6GMZOR00	M. RESISTOR CH 1/10W 0	1	
R3015	ERJ6GMYG222	M. RESISTOR CH 1/10W 2.2K	1	
R3018	ERJ6GMYJ223	M. RESISTOR CH 1/10W 22K	1	
R3019, 20	ERJ6GMYG561	M. RESISTOR CH 1/10W 560	2	
R3021	ERJ6GMYJ391	M. RESISTOR CH 1/10W 390	1	
R3022	ERJ6GMYG102	M. RESISTOR CH 1/10W 1K	1	
R3023, 24	ERJ6GMYG821	M. RESISTOR CH 1/10W 820	2	
R3025	ERJ6GMYG152	M. RESISTOR CH 1/10W 1.5K	1	
R3026	ERJ6GMYG102	M. RESISTOR CH 1/10W 1K	1	
R3029	ERJ6GMYG222	M. RESISTOR CH 1/10W 2.2K	1	
R3030	ERJ6GEYG103	M. RESISTOR CH 1/10W 10K	1	
R3031	ERJ6GEYG102	M. RESISTOR CH 1/10W 1K	1	
R3032	ERJ6GMYG334	M. RESISTOR CH 1/10W 330K	1	
R3033	ERJ6GMYJ223	M. RESISTOR CH 1/10W 22K	1	
R3034	ERJ6GMYG103	M. RESISTOR CH 1/10W 10K	1	
R3037	ERDS2TJ102	C. RESISTOR 1/4W 1K	1	
R3039	ERJ6GMYG102	M. RESISTOR CH 1/10W 1K	1	
R3065	ERJ6GMYG103	M. RESISTOR CH 1/10W 10K	1	
R3068, 69	ERJ6GMYG103	M. RESISTOR CH 1/10W 10K	2	
R3076, 77	ERJ6GMYG103	M. RESISTOR CH 1/10W 10K	2	
R3078	ERDS2T0	C. RESISTOR 1/4W 0	1	
R3079, 80	ERJ6GMYG102	M. RESISTOR CH 1/10W 1K	2	
R3081	ERJ6GMYJ221	M. RESISTOR CH 1/10W 220	1	
R3082	ERJ6GMYG152	M. RESISTOR CH 1/10W 1.5K	1	
R3083	ERDS2TJ102	C. RESISTOR 1/4W 1K	1	
R3084	ERDS2TJ330	C. RESISTOR 1/4W 33	1	
R3085	ERJ6GMYG102	M. RESISTOR CH 1/10W 1K	1	
R3087	ERJ6GMYG563	M. RESISTOR CH 1/10W 56K	1	
R4003	ERJ6GMYG100	M. RESISTOR CH 1/10W 10	1	
R4007	ERJ6GMYG153	M. RESISTOR CH 1/10W 15K	1	
R4011	ERJ6GMYG103	M. RESISTOR CH 1/10W 10K	1	
R4012	ERJ6GMYG123	M. RESISTOR CH 1/10W 12K	1	
R4013	ERJ6GMYJ163	M. RESISTOR CH 1/10W 16K	1	
R4014	ERJ6GMYG562	M. RESISTOR CH 1/10W 5.6K	1	
R4015	ERJ6GMYG333	M. RESISTOR CH 1/10W 33K	1	
R4016	ERJ6GMYJ223	M. RESISTOR CH 1/10W 22K	1	
R4017	ERJ6GMYG133	M. RESISTOR CH 1/10W 1.3K	1	

Ref. No.	Part No.	Part Name & Description	Pcs	Remarks
R4019	ERJ6GMYJ105	M. RESISTOR CH 1/10W 1M	1	
R4020	ERJ6GMYG123	M. RESISTOR CH 1/10W 12K	1	
R4021	ERJ6GMYG393	M. RESISTOR CH 1/10W 39K	1	
R4022	ERJ6GMYG391	M. RESISTOR CH 1/10W 390	1	
R4023	ERJ6GMYG394	M. RESISTOR CH 1/10W 390K	1	
R4024	ERDS2TJ221	C. RESISTOR 1/4W 220	1	
R4025	ERJ6GMYG682	M. RESISTOR CH 1/10W 6.8K	1	
R4026	ERJ6GMYG473	M. RESISTOR CH 1/10W 47K	1	
R4027, 28	ERJ6GMYG103	M. RESISTOR CH 1/10W 10K	2	
R4029	ERJ6GMYG912	M. RESISTOR CH 1/10W 9.1K	1	
R4030	ERJ6GMZOR00	M. RESISTOR CH 1/10W 0	1	
R4031	ERJ6GMYG222	M. RESISTOR CH 1/10W 2.2K	1	
R4032	ERJ6GMYG271	M. RESISTOR CH 1/10W 270	1	
R4033	ERJ6GMYG681	M. RESISTOR CH 1/10W 680	1	
R4034	ERJ6GMYG183	M. RESISTOR CH 1/10W 18K	1	
R4035, 36	ERJ6GMYJ223	M. RESISTOR CH 1/10W 22K	2	
R4037	ERJ6GMYG103	M. RESISTOR CH 1/10W 10K	1	
R4038	ERJ6GMYG332	M. RESISTOR CH 1/10W 3.3K	1	
R4039	ERJ6GMYG102	M. RESISTOR CH 1/10W 1K	1	
R4040	ERDS2TJ102	C. RESISTOR 1/4W 1K	1	
R4041, 42	ERJ6GMYG393	M. RESISTOR CH 1/10W 39K	2	
R4043	ERG2SJ821	M. RESISTOR 2W 820	1	
R4044	ERDS2TJ102	C. RESISTOR 1/4W 1K	1	
R4048	ERJ6GMYG473	M. RESISTOR CH 1/10W 47K	1	
R4049	ERJ6GMYG682	M. RESISTOR CH 1/10W 6.8K	1	
R4050	ERJ6GMYJ221	M. RESISTOR CH 1/10W 220	1	
R4051	ERJ6GMYG822	M. RESISTOR CH 1/10W 8.2K	1	
R4054	ERJ6GMZOR00	M. RESISTOR CH 1/10W 0	1	
R4055	ERJ6GMYG153	M. RESISTOR CH 1/10W 15K	1	
R4056	ERJ6GMYG393	M. RESISTOR CH 1/10W 39K	1	
R4057	ERJ6GMYG272	M. RESISTOR CH 1/10W 2.7K	1	
R4058	ERJ6GMYG472	M. RESISTOR CH 1/10W 4.7K	1	
R4059	ERJ6GMYG332	M. RESISTOR CH 1/10W 3.3K	1	
R4067, 68	ERJ6GMZOR00	M. RESISTOR CH 1/10W 0	2	
R4071	ERJ6GMZOR00	M. RESISTOR CH 1/10W 0	1	
R4073	ERJ6GMYG103	M. RESISTOR CH 1/10W 10K	1	
R4503	ERJ3RBD203	M. RESISTOR CH 1/16W 20K	1	
R4504	ERJ3GEYG224	M. RESISTOR CH 1/16W 220K	1	
R4508	ERJ3GEYG224	M. RESISTOR CH 1/16W 220K	1	
R4512	ERJ3RBD113	M. RESISTOR CH 1/16W 11K	1	
R4513	ERJ3GEYJ103	M. RESISTOR CH 1/16W 10K	1	
R4517, 18	ERJ3GEYJ221	M. RESISTOR CH 1/16W 220	2	
R4519, 20	ERJ3GEYJ103	M. RESISTOR CH 1/16W 10K	2	
R4522	ERJ3GEYK225	M. RESISTOR CH 1/16W 2.2M	1	
R4528	ERJ3RBD153	M. RESISTOR CH 1/16W 15K	1	
R4529	ERJ3GEYG562	M. RESISTOR CH 1/16W 5.6K	1	
R4530	ERJ3GEYJ334	M. RESISTOR CH 1/16W 330K	1	
R4534	ERJ3GEYJ103	M. RESISTOR CH 1/16W 10K	1	
R4542	ERJ3GEYJ223	M. RESISTOR CH 1/16W 22K	1	
R4562	ERJ3RBD822	M. RESISTOR CH 1/16W 8.2K	1	
R4563	ERJ3GEYJ272	M. RESISTOR CH 1/16W 2.7K	1	
R4584	ERJ3GEYJ103	M. RESISTOR CH 1/16W 10K	1	
R4585	ERJ3GEYOR00	M. RESISTOR CH 1/16W 0	1	
R4586	ERJ3GEYJ103	M. RESISTOR CH 1/16W 10K	1	
R4601	ERJ3GEYJ473	M. RESISTOR CH 1/16W 47K	1	
R4603, 04	ERJ3GEYJ473	M. RESISTOR CH 1/16W 47K	2	
R4605	ERJ6GEYG203	M. RESISTOR CH 1/10W 20K	1	
R4606	ERJ3GEYJ203	M. RESISTOR CH 1/16W 20K	1	
R4607	ERJ3GEYJ473	M. RESISTOR CH 1/16W 47K	1	
R4608	ERDS2TJ103	C. RESISTOR 1/4W 10K	1	
R4621	ERJ6GEYG163	M. RESISTOR CH 1/10W 16K	1	
R4623	ERJ3GEYJ221	M. RESISTOR CH 1/16W 220	1	
R4624	ERJ3GEYJ103	M. RESISTOR CH 1/16W 10K	1	
R4641, 42	ERJ3GEYOR00	M. RESISTOR CH 1/16W 0	2	
R4663, 64	ERJ3GEYJ103	M. RESISTOR CH 1/16W 10K	2	
R4695	ERJ3GEYJ473	M. RESISTOR CH 1/16W 47K	1	
R4697	ERJ6GEYG562	M. RESISTOR CH 1/10W 5.6K	1	
R4698	ERJ3GEYJ393	M. RESISTOR CH 1/16W 39K	1	
R4704	ERJ3GEYJ393	M. RESISTOR CH 1/16W 39K	1	
R6001	ERJ6GMYJ201	M. RESISTOR CH 1/10W 200	1	
R6002	ERJ6GMYG272	M. RESISTOR CH 1/10W 2.7K	1	
R6003-05	ERJ6GMYG333	M. RESISTOR CH 1/10W 33K	3	
R6006, 07	ERJ6GMYG223	M. RESISTOR CH 1/10W 22K	2	
R6008	ERJ6GMYG272	M. RESISTOR CH 1/10W 2.7K	1	
R6009	ERJ6GMYG103	M. RESISTOR CH 1/10W 10K	1	

Ref. No.	Part No.	Part Name & Description	Pcs	Remarks
R6010	ERJ6GMYG272	M. RESISTOR CH 1/10W 2.7K	1	
R6011	ERJ6GMYG102	M. RESISTOR CH 1/10W 1K	1	
R6012, 13	ERJ6GMYG101	M. RESISTOR CH 1/10W 100	2	
R6014	ERJ6GMYG473	M. RESISTOR CH 1/10W 47K	1	
R6015	ERJ6GMYG104	M. RESISTOR CH 1/10W 100K	1	
R6016	ERJ6GMYJ683	M. RESISTOR CH 1/10W 68K	1	
R6017	ERDS2TJ103	C. RESISTOR 1/4W 10K	1	
R6018	ERJ6GMYG103	M. RESISTOR CH 1/10W 10K	1	
R6019	ERDS2TJ473	C. RESISTOR 1/4W 47K	1	
R6020	ERJ6GMYG104	M. RESISTOR CH 1/10W 100K	1	
R6021-23	ERJ6GMYG101	M. RESISTOR CH 1/10W 100	3	
R6024	ERJ6GMYG222	M. RESISTOR CH 1/10W 2.2K	1	
R6025	ERJ6GMYG103	M. RESISTOR CH 1/10W 10K	1	
R6026	ERJ6GMYG473	M. RESISTOR CH 1/10W 47K	1	
R6027	ERJ6GMYG102	M. RESISTOR CH 1/10W 1K	1	
R6028	ERJ6GMYG392	M. RESISTOR CH 1/10W 3.9K	1	
R6029, 30	ERJ6GMYG272	M. RESISTOR CH 1/10W 2.7K	2	
R6033	ERJ6GMYG272	M. RESISTOR CH 1/10W 2.7K	1	
R6034	ERJ6GMYG102	M. RESISTOR CH 1/10W 1K	1	
R6035, 36	ERJ6GMYJ221	M. RESISTOR CH 1/10W 220	2	
R6037, 38	ERJ6GMYG102	M. RESISTOR CH 1/10W 1K	2	
R6039	ERDS2TJ271	C. RESISTOR 1/4W 270	1	
R6040, 41	ERJ6GMYJ683	M. RESISTOR CH 1/10W 68K	2	
R6043	ERJ6GMYG392	M. RESISTOR CH 1/10W 3.9K	1	
R6044	ERJ6GMYG103	M. RESISTOR CH 1/10W 10K	1	
R6046	ERJ6GMYG103	M. RESISTOR CH 1/10W 10K	1	
R6048	ERJ6GMYG103	M. RESISTOR CH 1/10W 10K	1	
R6049	ERDS2TJ102	C. RESISTOR 1/4W 1K	1	
R6050	ERJ6GMYG102	M. RESISTOR CH 1/10W 1K	1	
R6052	ERJ6GMYG103	M. RESISTOR CH 1/10W 10K	1	
R6054	ERJ6GMYG472	M. RESISTOR CH 1/10W 4.7K	1	
R6055	ERJ6GMYG183	M. RESISTOR CH 1/10W 18K	1	
R6056-58	ERJ6GMYG102	M. RESISTOR CH 1/10W 1K	3	
R6059	ERJ6GMYG103	M. RESISTOR CH 1/10W 10K	1	
R6060	ERJ6GMYG822	M. RESISTOR CH 1/10W 8.2K	1	
R6061	ERJ6GMYG243	M. RESISTOR CH 1/10W 24K	1	
R7301	ERJ6GEYG182	M. RESISTOR CH 1/10W 1.8K	1	
R7302	ERJ3GEYG472	M. RESISTOR CH 1/16W 4.7K	1	
R7303	ERJ3GEYG152	M. RESISTOR CH 1/16W 1.5K	1	
R7308	ERJ3GEYJ121	M. RESISTOR CH 1/16W 120	1	
R7309, 10	ERJ6GEYF561	M. RESISTOR CH 1/10W 560	2	
R7311	ERJ6GEYG221	M. RESISTOR CH 1/10W 220	1	
R7312	ERJ6GEYG152	M. RESISTOR CH 1/10W 1.5K	1	
R7313, 14	ERJ3GEYG272	M. RESISTOR CH 1/16W 2.7K	2	
R7315	ERJ3GEYJ114	M. RESISTOR CH 1/16W 110K	1	
R7316	ERJ3GEYJ223	M. RESISTOR CH 1/16W 22K	1	
R7317	ERJ3GEYJ473	M. RESISTOR CH 1/16W 47K	1	
R7320	ERJ3GEYJ104	M. RESISTOR CH 1/16W 100K	1	
R7321-23	ERJ3GEYJ333	M. RESISTOR CH 1/16W 33K	3	
R7324	ERJ3GEYJ103	M. RESISTOR CH 1/16W 10K	1	
R7325	ERJ3GEYG102	M. RESISTOR CH 1/16W 1K	1	
R7326	ERJ3GEYJ104	M. RESISTOR CH 1/16W 100K	1	
R7327-29	ERJ3GEYJ333	M. RESISTOR CH 1/16W 33K	3	
R7330	ERJ3GEY0R00	M. RESISTOR CH 1/16W 0	1	
R7332	ERJ3GEYG102	M. RESISTOR CH 1/16W 1K	1	
R7333	ERJ3GEYJ104	M. RESISTOR CH 1/16W 100K	1	
R7334-36	ERJ3GEYJ333	M. RESISTOR CH 1/16W 33K	3	
R7337	ERJ3GEY0R00	M. RESISTOR CH 1/16W 0	1	
R7339	ERJ3GEYG102	M. RESISTOR CH 1/16W 1K	1	
R7341-43	ERJ6GEYJ471	M. RESISTOR CH 1/10W 470	3	
R7344	ERJ3GEYG102	M. RESISTOR CH 1/16W 1K	1	
R7345, 46	ERJ3GEYJ473	M. RESISTOR CH 1/16W 47K	2	
R7350	ERJ3GEYG102	M. RESISTOR CH 1/16W 1K	1	
R7351	ERJ3GEYJ473	M. RESISTOR CH 1/16W 47K	1	
R7352-56	ERJ3GEYJ103	M. RESISTOR CH 1/16W 10K	5	
R7357	ERJ3GEYG472	M. RESISTOR CH 1/16W 4.7K	1	
R7362	ERJ3GEYG682	M. RESISTOR CH 1/16W 6.8K	1	
R7366	ERJ3GEYG102	M. RESISTOR CH 1/16W 1K	1	
R7367	ERJ3GEYJ103	M. RESISTOR CH 1/16W 10K	1	
R7368	ERJ3GEYG102	M. RESISTOR CH 1/16W 1K	1	
R7370	ERJ3GEYJ103	M. RESISTOR CH 1/16W 10K	1	
R7376, 77	ERJ3GEYJ104	M. RESISTOR CH 1/16W 100K	2	
R7378	ERJ3GEYG152	M. RESISTOR CH 1/16W 1.5K	1	
R7379	ERJ3GEY0R00	M. RESISTOR CH 1/16W 0	1	
R7381	ERJ3GEY0R00	M. RESISTOR CH 1/16W 0	1	

Ref. No.	Part No.	Part Name & Description	Pcs	Remarks
R7383	ERJ3GEY0R00	M. RESISTOR CH 1/16W 0	1	
R7601	ERJ6GMYG151	M. RESISTOR CH 1/10W 150	1	
R7602, 03	ERJ6GMYJ683	M. RESISTOR CH 1/10W 68K	2	
R7604	ERJ6GMYG151	M. RESISTOR CH 1/10W 150	1	
R7605-07	ERJ6GMYG102	M. RESISTOR CH 1/10W 1K	3	
R7612	ERG2SJ331	M. RESISTOR 2W 330	1	
R7614	ERJ6GMYG561	M. RESISTOR CH 1/10W 560	1	
R7615	ERJ6GMYG103	M. RESISTOR CH 1/10W 10K	1	
R7616	ERG2SJ331	M. RESISTOR 2W 330	1	
R7618	ERJ6GMYG472	M. RESISTOR CH 1/10W 4.7K	1	
R7619	ERJ6GMYG103	M. RESISTOR CH 1/10W 10K	1	
R7622, 23	ERJ6GMZ0R00	M. RESISTOR CH 1/10W 0	2	
R7624	ERJ6GMYG103	M. RESISTOR CH 1/10W 10K	1	
R7625	ERJ6GMYG272	M. RESISTOR CH 1/10W 2.7K	1	
R7626	ERJ6GMYG222	M. RESISTOR CH 1/10W 2.2K	1	
R7703, 04	ERJ6GMYG101	M. RESISTOR CH 1/10W 100	2	
R7705	ERJ6GMYG102	M. RESISTOR CH 1/10W 1K	1	
R7706	ERJ6GMYG273	M. RESISTOR CH 1/10W 27K	1	
R7707	ERJ6GMYG102	M. RESISTOR CH 1/10W 1K	1	
R7708	ERJ6GMYG222	M. RESISTOR CH 1/10W 2.2K	1	
R7709, 10	ERJ6GMYG472	M. RESISTOR CH 1/10W 4.7K	2	
R7711	ERJ6GMYJ511	M. RESISTOR CH 1/10W 510	1	
R7712	ERJ6GMYG561	M. RESISTOR CH 1/10W 560	1	
R7713	ERJ6GMYG102	M. RESISTOR CH 1/10W 1K	1	
R7714-19	ERJ6GMYG101	M. RESISTOR CH 1/10W 100	6	
R7723	ERJ6GMYG472	M. RESISTOR CH 1/10W 4.7K	1	
R7725	ERJ6GMYG332	M. RESISTOR CH 1/10W 3.3K	1	
R7732	ERJ6GMYG472	M. RESISTOR CH 1/10W 4.7K	1	
R7733	ERJ6GMYG104	M. RESISTOR CH 1/10W 100K	1	
R7735	ERJ6GMYG104	M. RESISTOR CH 1/10W 100K	1	
R7736	ERJ6GMYG472	M. RESISTOR CH 1/10W 4.7K	1	
R7737, 38	ERJ6GMYJ221	M. RESISTOR CH 1/10W 220	2	
R7739	ERJ6GMYG102	M. RESISTOR CH 1/10W 1K	1	
R7740	ERJ6GMYG911	M. RESISTOR CH 1/10W 910	1	
R7746	ERJ6GMYG393	M. RESISTOR CH 1/10W 39K	1	
R7747	ERJ6GMYG472	M. RESISTOR CH 1/10W 4.7K	1	
R7750	ERJ6GMYG331	M. RESISTOR CH 1/10W 330	1	
R7751, 52	ERJ6GMYG102	M. RESISTOR CH 1/10W 1K	2	
R7754	ERJ6GMYG102	M. RESISTOR CH 1/10W 1K	1	
R7755	ERJ6GMYG202	M. RESISTOR CH 1/10W 2K	1	
R7758	ERJ6GMYG273	M. RESISTOR CH 1/10W 27K	1	
R7759	ERJ6GMYJ362	M. RESISTOR CH 1/10W 3.6K	1	
R7760	ERJ6GMYG752	M. RESISTOR CH 1/10W 7.5K	1	
R7761	ERJ6GMYG272	M. RESISTOR CH 1/10W 2.7K	1	
R7762	ERJ6GMYG202	M. RESISTOR CH 1/10W 2K	1	
R7763	ERJ6GMYJ302	M. RESISTOR CH 1/10W 3K	1	
R7766-68	ERJ6GMYG101	M. RESISTOR CH 1/10W 100	3	
R7769	ERJ6GMYG273	M. RESISTOR CH 1/10W 27K	1	
R7770	ERJ6GMYG224	M. RESISTOR CH 1/10W 220K	1	
R7771	ERJ6GMYG104	M. RESISTOR CH 1/10W 100K	1	
R7772	ERDS2TJ221	C. RESISTOR 1/4W 220	1	
R7773	ERJ6GMYJ223	M. RESISTOR CH 1/10W 22K	1	
R7774	ERJ6GMYG104	M. RESISTOR CH 1/10W 100K	1	
R7775	ERJ6GMYG473	M. RESISTOR CH 1/10W 47K	1	
R7776	ERJ6GMYG472	M. RESISTOR CH 1/10W 4.7K	1	
R7777	ERJ6GMYK225	M. RESISTOR CH 1/10W 2.2M	1	
R7781	ERJ6GMYG224	M. RESISTOR CH 1/10W 220K	1	
R7782	ERJ6GMYG101	M. RESISTOR CH 1/10W 100	1	
R7785	ERJ6GMYG101	M. RESISTOR CH 1/10W 100	1	
R7786, 87	ERJ6GMYJ221	M. RESISTOR CH 1/10W 220	2	
R7788	ERJ6GMYG103	M. RESISTOR CH 1/10W 10K	1	
R7789	ERJ6GMYG154	M. RESISTOR CH 1/10W 150K	1	
RX7701	EXBF9E103J	RESISTOR-RESISTOR	1	
S6001	VES0709	SWITCH	1	
T0703	EQV5EC071A	TRANSFORMER	1	
T0704	EQV5EC072A	TRANSFORMER	1	
T4002	EIQ7GF014Q	TRANSFORMER	1	
⚠ TU7601	ENG47258G1	TUNER	1	[SUPPLIED FROM MBV]
VR0701	EVNCBAA00B24	V. RESISTOR 20K	1	
VR2001	EVNGYAA03B54	V. RESISTOR 50K	1	

Ref. No.	Part No.	Part Name & Description	Pcs	Remarks
VR3001, 02	EVNCYAA03B23	V. RESISTOR 2K	2	
VR3012, 13	EVNCYAA03B52	V. RESISTOR 500	2	
VR3014	EVNCYAA03B54	V. RESISTOR 50K	1	
VR4001	EVNCYAA03B15	V. RESISTOR 100K	1	
VR4501	EVMECSA00BS3	V. RESISTOR 6.8K	1	
VR4509	EVMECSA00B53	V. RESISTOR 5K	1	
VR4550	EVMECSA00B14	V. RESISTOR 10K	1	
X301	VSX0162	CRYSTAL OSCILLATOR	1	
X0701	VLF1389	FILTER	1	[SUPPLIED FROM MBV]
X0703	EFCT6M65MW3B	FILTER	1	[SUPPLIED FROM MBV]
X0704	VLF1369	FILTER	1	[SUPPLIED FROM MBV]
X6001	VSX0583	CRYSTAL OSCILLATOR	1	
X7302	VSX0877	CRYSTAL OSCILLATOR	1	[SUPPLIED FROM MBV]
X7303	EFOEC4004A4	CERAMIC OSCILLATOR	1	
X7702	VSX0353	CRYSTAL OSCILLATOR	1	
		MISCELLANEOUS		
	VMP4894	SUPPORT ANGLE	2	
	VMD2329	PHOTO TRANSISTOR HOLDER	2	
	VMD2328	REEL GUIDE	1	
	VMD2330	LED HOLDER	1	
	VSC3553	SHIELD COVER (MAIN)	1	FOR NICAM DECODER C.B.A.
	VSC3555	SHIELD COVER (BOTTOM)	1	FOR NICAM DECODER C.B.A.
	VMT0784	SPACER	1	FOR NICAM DECODER C.B.A.
	VMP4471	TV DEMODULATOR ANGLE	1	FOR TV DEMODU. C.B.A.
■	VEP06B97C	MAIN C.B.A.		[SUPPLIED FROM MBV]
				(RTL)
				NV-HD620BL
C301	ECUX1H101JCV	C. CAPACITOR CH 50V 100P	1	
C302	ECUX1H820JCV	C. CAPACITOR CH 50V 82P	1	
C305	ECUX1H102GCV	C. CAPACITOR CH 50V 1000P	1	[SUPPLIED FROM MBV]
C306	ECUX1H103ZFV	C. CAPACITOR CH 50V 0.01U	1	
C307	ECEA1EKA4R7	E. CAPACITOR 25V 4.7U	1	
C309	ECUX1H330JCV	C. CAPACITOR CH 50V 33P	1	
C310	ECUX1E223KBV	C. CAPACITOR CH 25V 0.023U	1	
C311	ECUM1E104KBN	C. CAPACITOR CH 25V 0.1U	1	
C312	ECUX1H680JCV	C. CAPACITOR CH 50V 68P	1	
C313	ECUX1H681GCV	C. CAPACITOR CH 50V 680P	1	[SUPPLIED FROM MBV]
C314	ECUM1H104ZFN	C. CAPACITOR CH 50V 0.1U	1	
C315	ECUX1H103ZFV	C. CAPACITOR CH 50V 0.01U	1	
C316	ECEA1HKA010	E. CAPACITOR 50V 1U	1	
C317	ECUX1C104KBV	C. CAPACITOR CH 16V 0.1U	1	
C318	ECUX1C104ZFV	C. CAPACITOR CH 16V 0.1U	1	
C319	ECUX1H222KBV	C. CAPACITOR CH 50V 2200P	1	
C320	ECUX1C333KBV	C. CAPACITOR CH 16V 0.033U	1	
C321	ECEA1HKA010	E. CAPACITOR 50V 1U	1	
C322	ECUX1H270JCV	C. CAPACITOR CH 50V 27P	1	
C323	ECUX1C104ZFV	C. CAPACITOR CH 16V 0.1U	1	
C324	ECEA0JKA101	E. CAPACITOR 6.3V 100U	1	
C325	ECUX1H103ZFV	C. CAPACITOR CH 50V 0.01U	1	
C327	ECEA0JKA101	E. CAPACITOR 6.3V 100U	1	
C328	ECUX1H080DCV	C. CAPACITOR CH 50V 8P	1	
C329	ECUX1H101JCV	C. CAPACITOR CH 50V 100P	1	
C330	ECUX1H330JCV	C. CAPACITOR CH 50V 33P	1	
C331	ECUX1H820JCV	C. CAPACITOR CH 50V 82P	1	
C332	ECUX1H681JCV	C. CAPACITOR CH 50V 680P	1	
C333	ECUX1H060DCV	C. CAPACITOR CH 50V 6P	1	
C334	ECUX1H100DCV	C. CAPACITOR CH 50V 10P	1	
C335	ECUX1H120JCV	C. CAPACITOR CH 50V 12P	1	
C336	ECUX1C104ZFV	C. CAPACITOR CH 16V 0.1U	1	
C337	ECEA1CKA100	E. CAPACITOR 16V 10U	1	
C338	ECUX1C104ZFV	C. CAPACITOR CH 16V 0.1U	1	
C339	ECUX1H470JCV	C. CAPACITOR CH 50V 47P	1	
C340	ECEA1CKA100	E. CAPACITOR 16V 10U	1	
C341	ECUX1E223KBV	C. CAPACITOR CH 25V 0.023U	1	
C342	ECEA1EKA4R7	E. CAPACITOR 25V 4.7U	1	
C343	ECEA1EKN4R7	E. CAPACITOR 25V 4.7U	1	
C344	ECUX1C104ZFV	C. CAPACITOR CH 16V 0.1U	1	
C345, 46	ECUX1H103ZFV	C. CAPACITOR CH 50V 0.01U	2	
C347	ECUM1H104ZFN	C. CAPACITOR CH 50V 0.1U	1	
C348	ECEA1CKA101	E. CAPACITOR 16V 100U	1	
C349	ECUX1C104ZFV	C. CAPACITOR CH 16V 0.1U	1	

Ref. No.	Part No.	Part Name & Description	Pcs	Remarks
C350	ECUX1H152KBV	C. CAPACITOR CH 50V 1500P	1	
C351	ECUX1H392KBV	C. CAPACITOR CH 50V 3900P	1	
C352	ECEA0JKA470	E. CAPACITOR 6.3V 47U	1	
C353	ECUX1H221JCV	C. CAPACITOR CH 50V 220P	1	
C354	ECUX1H470JCV	C. CAPACITOR CH 50V 47P	1	
C355	ECEA0JKA221	E. CAPACITOR 6.3V 220U	1	
C356	ECUX1H103ZFV	C. CAPACITOR CH 50V 0.01U	1	
C357	ECUX1H103KBV	C. CAPACITOR CH 50V 0.01U	1	
C358	ECUX1H472KBV	C. CAPACITOR CH 50V 4700P	1	
C361	ERJ6GEY0R00	M. RESISTOR CH 1/10W 0	1	
C362	ECUX1H103ZFV	C. CAPACITOR CH 50V 0.01U	1	
C363	ECUX1H270JCV	C. CAPACITOR CH 50V 27P	1	
C365, 66	ECUX1H101JCV	C. CAPACITOR CH 50V 100P	2	
C370	ECUX1C104ZFV	C. CAPACITOR CH 16V 0.1U	1	
C371	ECEA1HKA0R1	E. CAPACITOR 50V 0.1U	1	
C372, 73	ECUX1C104ZFV	C. CAPACITOR CH 16V 0.1U	2	
C374	ECUX1H103ZFV	C. CAPACITOR CH 50V 0.01U	1	
C375	ECEA0JKA470	E. CAPACITOR 6.3V 47U	1	
C378	ECUX1H103ZFV	C. CAPACITOR CH 50V 0.01U	1	
C379, 80	ECUX1H330JCV	C. CAPACITOR CH 50V 33P	2	
C381	ECUX1H820JCV	C. CAPACITOR CH 50V 82P	1	
C0701, 02	ECUX1H103ZFV	C. CAPACITOR CH 50V 0.01U	2	
C0704	ECUX1H331JCV	C. CAPACITOR CH 50V 330P	1	
C0706	ECEA1HKA0R1	E. CAPACITOR 50V 0.1U	1	
C0707, 08	ECUX1H103ZFV	C. CAPACITOR CH 50V 0.01U	2	
C0709	ECUX1H120JCV	C. CAPACITOR CH 50V 12P	1	
C0710	ECUX1H470JPV	C. CAPACITOR CH 50V 47P	1	
C0711	ECEA1CKA100	E. CAPACITOR 16V 10U	1	
C0712	ECUX1H103ZFV	C. CAPACITOR CH 50V 0.01U	1	
C0714	ECQB1H473JF	P. CAPACITOR 50V 0.047U	1	
C0715	ECUM1H103ZFN	C. CAPACITOR CH 50V 0.01U	1	
C0716	ECEA1CKA470	E. CAPACITOR 16V 47U	1	
C0717	ECUX1H270JPV	C. CAPACITOR CH 50V 27P	1	
C0718	ECEA1HKSR47	E. CAPACITOR 50V 0.47U	1	
C0719	ECUX1H060DCV	C. CAPACITOR CH 50V 6P	1	
C0720	ECUX1H103ZFV	C. CAPACITOR CH 50V 0.01U	1	
C0723	ECEA1HKA0R1	E. CAPACITOR 50V 0.1U	1	
C0726	ECUX1H103ZFV	C. CAPACITOR CH 50V 0.01U	1	
C0730	ECUX1H103ZFV	C. CAPACITOR CH 50V 0.01U	1	
C0732	ECUX1H103ZFV	C. CAPACITOR CH 50V 0.01U	1	
C801	ECEA1CKA100	E. CAPACITOR 16V 10U	1	
C802	ECUX1H103ZFV	C. CAPACITOR CH 50V 0.01U	1	
C803	ECEA0JKA470	E. CAPACITOR 6.3V 47U	1	
C804	ECUX1H103ZFV	C. CAPACITOR CH 50V 0.01U	1	
C805	ECUX1H050CCV	C. CAPACITOR CH 50V 5P	1	
C806	ECUX1C104ZFV	C. CAPACITOR CH 16V 0.1U	1	
C807	ECUX1H103ZFV	C. CAPACITOR CH 50V 0.01U	1	
C1001	ECEA1CGE101	E. CAPACITOR 16V 100U	1	
C1002	ECUM1H103ZFN	C. CAPACITOR CH 50V 0.01U	1	
C1003	ECEA1CGE470	E. CAPACITOR 16V 47U	1	
C1004	ECUM1H103ZFN	C. CAPACITOR CH 50V 0.01U	1	
C1005	ECEA0JKG220	E. CAPACITOR 6.3V 22U	1	
C1006	ECUM1H103ZFN	C. CAPACITOR CH 50V 0.01U	1	
C1007	ECEA0JKG101	E. CAPACITOR 6.3V 100U	1	
C1008	ECUM1H103ZFN	C. CAPACITOR CH 50V 0.01U	1	
C1009	ECEA1AKG220	E. CAPACITOR 10V 22U	1	[SUPPLIED FROM MBV]
C1010	ECEA0JKG101	E. CAPACITOR 6.3V 100U	1	
C1011	ECUM1H103ZFN	C. CAPACITOR CH 50V 0.01U	1	
C1012	ECEA0JKG101	E. CAPACITOR 6.3V 100U	1	
C1013	ECEA0JKG220	E. CAPACITOR 6.3V 22U	1	
C2001	ECUM1H104ZFN	C. CAPACITOR CH 50V 0.1U	1	
C2002, 03	ECUM1H102KBN	C. CAPACITOR CH 50V 1000P	2	
C2004	ECUM1H223KBN	C. CAPACITOR CH 50V 0.022U	1	
C2005	ECUM1H104ZFN	C. CAPACITOR CH 50V 0.1U	1	
C2006	ECUM1H392KBN	C. CAPACITOR CH 50V 3900P	1	
C2007	ECUM1H472KBN	C. CAPACITOR CH 50V 4700P	1	
C2008	ECQV1H683JM	P. CAPACITOR 50V 0.068U	1	
C2009	ECEA0JKA221	E. CAPACITOR 6.3V 220U	1	
C2010	ECUM1H471JCN	C. CAPACITOR CH 50V 470P	1	
C2011	ECEA0JKA221	E. CAPACITOR 6.3V 220U	1	
C2012	ECEA1CKA100	E. CAPACITOR 16V 10U	1	
C2013	ECUM1H222KBN	C. CAPACITOR CH 50V 2200P	1	
C2014	ECUM1H103ZFN	C. CAPACITOR CH 50V 0.01U	1	
C2015	ECEA0JKA470	E. CAPACITOR 6.3V 47U	1	
C2016, 17	ECEA1EKN3R3	E. CAPACITOR 25V 3.3U	2	

Ref. No.	Part No.	Part Name & Description	Pcs	Remarks
C2018	ECEA1EKA4R7	E. CAPACITOR 25V 4.7U	1	
C2019, 20	ECUM1H102KBN	C. CAPACITOR CH 50V 1000P	2	
C2021, 22	ECUM1C105ZFN	C. CAPACITOR CH 16V 1U	2	
C2023	ECUM1H222KBN	C. CAPACITOR CH 50V 2200P	1	
C2024, 25	ECEA1HKA2R2	E. CAPACITOR 50V 2.2U	2	
C2026	ECEA1HKNR22	E. CAPACITOR 50V 0.22U	1	
C2027	ECA1EM470	E. CAPACITOR 25V 47U	1	
C2028	ECEA1HKA010	E. CAPACITOR 50V 1U	1	
C2029	ECA1EM470	E. CAPACITOR 25V 47U	1	
C2030, 31	ECUM1H333KBN	C. CAPACITOR CH 50V 0.033U	2	
C2032	ECUM1H103ZFN	C. CAPACITOR CH 50V 0.01U	1	
C2033	ECA0JM221	E. CAPACITOR 6.3V 220U	1	
C2035	ECUM1H333KBN	C. CAPACITOR CH 50V 0.033U	1	
C2036	ECQV1H683JM	P. CAPACITOR 50V 0.068U	1	
C2037	ECUM1H104ZFN	C. CAPACITOR CH 50V 0.1U	1	
C2038-40	ECUM1H333KBN	C. CAPACITOR CH 50V 0.033U	3	
C2041, 42	ECUM1H680JCN	C. CAPACITOR CH 50V 68P	2	
C2043, 44	ECUM1C474ZFN	C. CAPACITOR CH 16V 0.47U	2	
C2045	ECUM1H103ZFN	C. CAPACITOR CH 50V 0.01U	1	
C2046	ECEA1HKA2R2	E. CAPACITOR 50V 2.2U	1	
C2047-49	ECEA1VKN4R7	E. CAPACITOR 35V 4.7U	3	
C2050	ECUM1H473ZFN	C. CAPACITOR CH 50V 0.047U	1	
C2051	ECEA0JKG101	E. CAPACITOR 6.3V 100U	1	
C2052	ECQV1H683JM	P. CAPACITOR 50V 0.068U	1	
C2053	ECEA1HKAR47	E. CAPACITOR 50V 0.47U	1	
C2054	ECUM1H101JCN	C. CAPACITOR CH 50V 100P	1	
C2055	ECEA0JKA470	E. CAPACITOR 6.3V 47U	1	
C2056	ECQV1H104JM	P. CAPACITOR 50V 0.1U	1	
C2057, 58	ECEA1HKG0R1	E. CAPACITOR 50V 0.1U	2	
C2059	ECEA1HKA0R1	E. CAPACITOR 50V 0.1U	1	
C2061	ECUM1H104ZFN	C. CAPACITOR CH 50V 0.1U	1	
C3001	ECUM1H620JCN	C. CAPACITOR CH 50V 62P	1	
C3002	ECUM1H181JCN	C. CAPACITOR CH 50V 180P	1	
C3003	ECUM1H220JCN	C. CAPACITOR CH 50V 22P	1	
C3004	ECUM1H103ZFN	C. CAPACITOR CH 50V 0.01U	1	
C3006	ECUM1H103ZFN	C. CAPACITOR CH 50V 0.01U	1	
C3007	ECEA0JKA221	E. CAPACITOR 6.3V 220U	1	
C3008	ECUM1H102KBN	C. CAPACITOR CH 50V 1000P	1	
C3009	ECUM1H103ZFN	C. CAPACITOR CH 50V 0.01U	1	
C3010	ECUM1C105ZFN	C. CAPACITOR CH 16V 1U	1	
C3017, 18	ECUM1H103ZFN	C. CAPACITOR CH 50V 0.01U	2	
C3019	ECUM1H620JCN	C. CAPACITOR CH 50V 62P	1	
C3021	ECUM1H104ZFN	C. CAPACITOR CH 50V 0.1U	1	
C3023	ECEA1CKA470	E. CAPACITOR 16V 47U	1	
C3024	ECUM1E333KBN	C. CAPACITOR CH 25V 0.033U	1	
C3027	ECEA0JKA470	E. CAPACITOR 6.3V 47U	1	
C3028	ECUM1H151JCN	C. CAPACITOR CH 50V 150P	1	
C3029	ECUM1H220JCN	C. CAPACITOR CH 50V 22P	1	
C3031	ECUM1H220JCN	C. CAPACITOR CH 50V 22P	1	
C3032	ECUM1H681JCN	C. CAPACITOR CH 50V 680P	1	
C3033	ECUM1H330JCN	C. CAPACITOR CH 50V 33P	1	
C3055	ECUM1H103ZFN	C. CAPACITOR CH 50V 0.01U	1	
C3057	ECUM1H180JCN	C. CAPACITOR CH 50V 18P	1	
C3061	ECUM1H104ZFN	C. CAPACITOR CH 50V 0.1U	1	
C3062	ECEA0JKA470	E. CAPACITOR 6.3V 47U	1	
C3064	ERJ6GMZ0R00	M. RESISTOR CH 1/10W 0	1	
C3065	ECUM1H104ZFN	C. CAPACITOR CH 50V 0.1U	1	
C3066	ECUM1H151JCN	C. CAPACITOR CH 50V 150P	1	
C4004	ECEA1CKA100	E. CAPACITOR 16V 10U	1	
C4005	ECCD2H181J	C. CAPACITOR 500V 180P	1	
C4006	ECEA1CKA330	E. CAPACITOR 16V 33U	1	
C4007	ECUM1H153KBN	C. CAPACITOR CH 50V 0.015U	1	
C4009	ECEA1CKA100	E. CAPACITOR 16V 10U	1	
C4010	ECUM1H104ZFN	C. CAPACITOR CH 50V 0.1U	1	
C4011	ECQP1362JZ	P. CAPACITOR 100V 3600P	1	[SUPPLIED FROM MBV]
C4017	ECUM1H102JCN	C. CAPACITOR CH 50V 1000P	1	
C4018-20	ECEA1HKA0R1	E. CAPACITOR 50V 0.1U	3	
C4021, 22	ECUM1H153KBN	C. CAPACITOR CH 50V 0.015U	2	
C4023	ECUM1C105ZFN	C. CAPACITOR CH 16V 1U	1	
C4024	ECUM1H272KBN	C. CAPACITOR CH 50V 2700P	1	
C4025, 26	ECEA1CKA220	E. CAPACITOR 16V 22U	2	
C4027	ECEA1HKS3R3	E. CAPACITOR 50V 3.3U	1	
C4028	ECEA1CKA470	E. CAPACITOR 16V 47U	1	
C4029, 30	ECUM1H102JCN	C. CAPACITOR CH 50V 1000P	2	
C4031	ECEA1AKA101	E. CAPACITOR 10V 100U	1	

Ref. No.	Part No.	Part Name & Description	Pcs	Remarks
C4032	ECUM1H822KBN	C. CAPACITOR CH 50V 8200P	1	
C4033, 34	ECUM1H471JCN	C. CAPACITOR CH 50V 470P	2	
C4038	ECUM1H103ZFN	C. CAPACITOR CH 50V 0.01U	1	
C4039	ECUM1H220JCN	C. CAPACITOR CH 50V 22P	1	
C4040	ECUM1H102JCN	C. CAPACITOR CH 50V 1000P	1	
C4042	ECUM1H222JCN	C. CAPACITOR CH 50V 2200P	1	
C4044	ECEA1HKA4R7	E. CAPACITOR 50V 4.7U	1	
C4501	ECUX1H681JCV	C. CAPACITOR CH 50V 680P	1	
C4502	ECUX1H561JCV	C. CAPACITOR CH 50V 560P	1	
C4503	ECUX1H102KBV	C. CAPACITOR CH 50V 1000P	1	
C4506	ECA1CAK100X	E. CAPACITOR 16V 10U	1	[SUPPLIED FROM MBV]
C4507	ECQB1H223JF	P. CAPACITOR 50V 0.022U	1	
C4508	ECA1HAK4R7X	E. CAPACITOR 50V 4.7U	1	[SUPPLIED FROM MBV]
C4509	ECA1CAK470X	E. CAPACITOR 16V 47U	1	[SUPPLIED FROM MBV]
C4510	ECQB1H103JF	P. CAPACITOR 50V 0.01U	1	
C4511	ECQB1H332JF	P. CAPACITOR 50V 3300P	1	
C4512	ECUX1H561JCV	C. CAPACITOR CH 50V 560P	1	
C4513	ECUM1H681JCN	C. CAPACITOR CH 50V 680P	1	
C4514	ECUM1H561JCN	C. CAPACITOR CH 50V 560P	1	
C4515	ECA1HAK4R7X	E. CAPACITOR 50V 4.7U	1	[SUPPLIED FROM MBV]
C4521	ECUM1H473KBN	C. CAPACITOR CH 50V 0.047U	1	
C4522	ECA1HAK4R7X	E. CAPACITOR 50V 4.7U	1	[SUPPLIED FROM MBV]
C4530	ECA0JAK470X	E. CAPACITOR 6.3V 47U	1	[SUPPLIED FROM MBV]
C4533	ECA1CAK470X	E. CAPACITOR 16V 47U	1	[SUPPLIED FROM MBV]
C4537	ECUM1H102JCN	C. CAPACITOR CH 50V 1000P	1	
C4538	ECA1HAKR47X	E. CAPACITOR 50V 0.47U	1	[SUPPLIED FROM MBV]
C4541	ECUM1H104ZFN	C. CAPACITOR CH 50V 0.1U	1	
C4551	ECQB1H223JF	P. CAPACITOR 50V 0.022U	1	
C4556	ECA1CAK100X	E. CAPACITOR 16V 10U	1	[SUPPLIED FROM MBV]
C4558	ECA1HAK4R7X	E. CAPACITOR 50V 4.7U	1	[SUPPLIED FROM MBV]
C4559	ECA1CAK470X	E. CAPACITOR 16V 47U	1	[SUPPLIED FROM MBV]
C4560	ECQB1H103JF	P. CAPACITOR 50V 0.01U	1	
C4561	ECQB1H332JF	P. CAPACITOR 50V 3300P	1	
C4562	ECUX1H561JCV	C. CAPACITOR CH 50V 560P	1	
C4565	ECA1HAK4R7X	E. CAPACITOR 50V 4.7U	1	[SUPPLIED FROM MBV]
C4569	ECUX1C104ZFV	C. CAPACITOR CH 16V 0.1U	1	
C4572	ECA1HAK4R7X	E. CAPACITOR 50V 4.7U	1	[SUPPLIED FROM MBV]
C4576	ECUM1H473KBN	C. CAPACITOR CH 50V 0.047U	1	
C4585, 86	ECA0JAK101X	E. CAPACITOR 6.3V 100U	2	[SUPPLIED FROM MBV]
C4587	ECUM1H103ZFN	C. CAPACITOR CH 50V 0.01U	1	
C4591	ECUM1H104ZFN	C. CAPACITOR CH 50V 0.1U	1	
C4592	ECUX1H102KBV	C. CAPACITOR CH 50V 1000P	1	
C4673	ECUX1C104ZFV	C. CAPACITOR CH 16V 0.1U	1	
C4674	ECUM1H104ZFN	C. CAPACITOR CH 50V 0.1U	1	
C4676	ECA1VAK470X	E. CAPACITOR 35V 47U	1	[SUPPLIED FROM MBV]
C4677	ECA1CAK470X	E. CAPACITOR 16V 47U	1	[SUPPLIED FROM MBV]
C6001	ECUM1H104ZFN	C. CAPACITOR CH 50V 0.1U	1	
C6002	ECUM1C224ZFN	C. CAPACITOR CH 16V 0.22U	1	
C6003	ECEA1HKA2R2	E. CAPACITOR 50V 2.2U	1	
C6004	ECUM1H103ZFN	C. CAPACITOR CH 50V 0.01U	1	
C6005	ECEA0JKA470	E. CAPACITOR 6.3V 47U	1	
C6006	ECUM1H104ZFN	C. CAPACITOR CH 50V 0.1U	1	
C6007	ECEA0JKA101	E. CAPACITOR 6.3V 100U	1	
C6008	ECUM1H270JCN	C. CAPACITOR CH 50V 27P	1	
C6009	ECUM1H150JCN	C. CAPACITOR CH 50V 15P	1	
C6010	ECUM1H104ZFN	C. CAPACITOR CH 50V 0.1U	1	
C6013, 14	ECUM1H271JCN	C. CAPACITOR CH 50V 270P	2	
C6015	ECEA1CKA100	E. CAPACITOR 16V 10U	1	
C6016	ECUM1H104ZFN	C. CAPACITOR CH 50V 0.1U	1	
C6018	ECUM1H104ZFN	C. CAPACITOR CH 50V 0.1U	1	
C7301, 02	ECUX1H103ZFV	C. CAPACITOR CH 50V 0.01U	2	
C7303	ECEA1CKA470	E. CAPACITOR 16V 47U	1	
C7304	ECUX1H103ZFV	C. CAPACITOR CH 50V 0.01U	1	
C7305	ECEA1CKA220	E. CAPACITOR 16V 22U	1	
C7306	ECUX1H391JCV	C. CAPACITOR CH 50V 390P	1	
C7309-12	ECUX1H103ZFV	C. CAPACITOR CH 50V 0.01U	4	
C7313	ECEA0JKA220	E. CAPACITOR 6.3V 22U	1	
C7314	ECUX1H103ZFV	C. CAPACITOR CH 50V 0.01U	1	
C7315	ECEA1EKA4R7	E. CAPACITOR 25V 4.7U	1	
C7317, 18	ECUX1H040CCV	C. CAPACITOR CH 50V 4P	2	
C7320	ECEA0JKA101	E. CAPACITOR 6.3V 100U	1	
C7321	ECUX1H103ZFV	C. CAPACITOR CH 50V 0.01U	1	
C7322	ECEA1EKA4R7	E. CAPACITOR 25V 4.7U	1	
C7323, 24	ECUX1H391JCV	C. CAPACITOR CH 50V 390P	2	
C7325, 26	ECEA1CKA100	E. CAPACITOR 16V 10U	2	

Ref.No.	Part No.	Part Name & Description	Pcs	Remarks
C7327	ECUX1C104ZFV	C. CAPACITOR CH 16V 0.1U	1	
C7328	ECEA1CKA470	E. CAPACITOR 16V 47U	1	
C7329, 30	ECUX1H471JCV	C. CAPACITOR CH 50V 470P	2	
C7331	ECEA1CKA100	E. CAPACITOR 16V 10U	1	
C7332, 33	ECUX1C104ZFV	C. CAPACITOR CH 16V 0.1U	2	
C7334	ECEA0JKA101	E. CAPACITOR 6.3V 100U	1	
C7335	ECUX1C104ZFV	C. CAPACITOR CH 16V 0.1U	1	
C7338	ECUM1H471JCN	C. CAPACITOR CH 50V 470P	1	
C7339	ECUM1H182KBM	C. CAPACITOR CH 50V 1800P	1	
C7340	ECUM1H270JCN	C. CAPACITOR CH 50V 27P	1	
C7341	ECEA1CKA100	E. CAPACITOR 16V 10U	1	
C7342	ECUM1H561JCN	C. CAPACITOR CH 50V 560P	1	
C7343	ECEA1HKA010	E. CAPACITOR 50V 1U	1	
C7344	ECUM1H471JCN	C. CAPACITOR CH 50V 470P	1	
C7345	ECUM1H182KBM	C. CAPACITOR CH 50V 1800P	1	
C7346	ECUM1H270JCN	C. CAPACITOR CH 50V 27P	1	
C7347	ECEA1CKA100	E. CAPACITOR 16V 10U	1	
C7348	ECUM1H561JCN	C. CAPACITOR CH 50V 560P	1	
C7350	ECEA1HKA010	E. CAPACITOR 50V 1U	1	
C7351	ECUM1H471JCN	C. CAPACITOR CH 50V 470P	1	
C7352	ECUM1H182KBM	C. CAPACITOR CH 50V 1800P	1	
C7353	ECUM1H270JCN	C. CAPACITOR CH 50V 27P	1	
C7354	ECEA1CKA100	E. CAPACITOR 16V 10U	1	
C7355	ECUM1H561JCN	C. CAPACITOR CH 50V 560P	1	
C7357	ECUX1C104ZFV	C. CAPACITOR CH 16V 0.1U	1	
C7358	ECEA1HKA3R3	E. CAPACITOR 50V 3.3U	1	
C7359	ECUX1C104ZFV	C. CAPACITOR CH 16V 0.1U	1	
C7365	ECEA1HKA010	E. CAPACITOR 50V 1U	1	
C7369	ECEA0JKA470	E. CAPACITOR 6.3V 47U	1	
C7370	ECUX1C104ZFV	C. CAPACITOR CH 16V 0.1U	1	
C7371, 72	ECUX1H103ZFV	C. CAPACITOR CH 50V 0.01U	2	
C7374, 75	ECUX1H150JCV	C. CAPACITOR CH 50V 15P	2	
C7601	ECUM1H103ZFN	C. CAPACITOR CH 50V 0.01U	1	
C7604	ECEA0JKA101	E. CAPACITOR 6.3V 100U	1	
C7605	ECUM1H104ZFN	C. CAPACITOR CH 50V 0.1U	1	
C7606	ECEA1CKA101	E. CAPACITOR 16V 100U	1	
C7608	ERJ6GMZ0R00	M. RESISTOR CH 1/10W 0	1	
C7609	ECEA0JKA101	E. CAPACITOR 6.3V 100U	1	
C7610	ECUM1H103ZFN	C. CAPACITOR CH 50V 0.01U	1	
C7612	ECEA0JKA101	E. CAPACITOR 6.3V 100U	1	
C7614	ECEA1HKA100	E. CAPACITOR 50V 10U	1	
C7615	ECEA1HKA010	E. CAPACITOR 50V 1U	1	
C7616	ECUM1E104KBN	C. CAPACITOR CH 25V 0.1U	1	
C7617	ECEA1AKS221	E. CAPACITOR 10V 220U	1	
C7701	ECUM1H150JCN	C. CAPACITOR CH 50V 15P	1	
C7702	ECUM1H080DCN	C. CAPACITOR CH 50V 8P	1	
C7706	ECUM1H103ZFN	C. CAPACITOR CH 50V 0.01U	1	
C7708-10	ECUM1H104ZFN	C. CAPACITOR CH 50V 0.1U	3	
C7712	ECEA0JKA470	E. CAPACITOR 6.3V 47U	1	
C7713	ECEA1EKA4R7	E. CAPACITOR 25V 4.7U	1	
C7714	ECEA0JKA101	E. CAPACITOR 6.3V 100U	1	
C7715	ECEA1CKA100	E. CAPACITOR 16V 10U	1	
C7716	ECUM1H120JCN	C. CAPACITOR CH 50V 12P	1	
C7718	ECUX1H561JCN	C. CAPACITOR CH 50V 560P	1	
C7721	ECUM1H103ZFN	C. CAPACITOR CH 50V 0.01U	1	
C7723	ECUM1H104ZFN	C. CAPACITOR CH 50V 0.1U	1	
C7724	ECEA0JKA470	E. CAPACITOR 6.3V 47U	1	
C7726	ECEA0JKA470	E. CAPACITOR 6.3V 47U	1	
C7729	ECUM1H104ZFN	C. CAPACITOR CH 50V 0.1U	1	
C7730	ECUM1H820JCN	C. CAPACITOR CH 50V 82P	1	
C7731	ECUM1H104ZFN	C. CAPACITOR CH 50V 0.1U	1	
C7732	ECUM1H102JCN	C. CAPACITOR CH 50V 1000P	1	
C7734	ECUM1H104ZFN	C. CAPACITOR CH 50V 0.1U	1	
C7736	ECUM1H104ZFN	C. CAPACITOR CH 50V 0.1U	1	
C7737	ECEA0JKA470	E. CAPACITOR 6.3V 47U	1	
C7738, 39	ECUM1H104ZFN	C. CAPACITOR CH 50V 0.1U	2	
C7743	ECUM1H104ZFN	C. CAPACITOR CH 50V 0.1U	1	
C7747	ECUM1H104ZFN	C. CAPACITOR CH 50V 0.1U	1	
C7752	ECEA1HKA2R2	E. CAPACITOR 50V 2.2U	1	
C7753, 54	ECUM1H221JCN	C. CAPACITOR CH 50V 220P	2	
C7755-57	ECUM1H104ZFN	C. CAPACITOR CH 50V 0.1U	3	
C7759, 60	ECUM1H101JCN	C. CAPACITOR CH 50V 100P	2	
D302, 03	1SS355	DIODE	2	
D314	1SS355	DIODE	1	

Ref.No.	Part No.	Part Name & Description	Pcs	Remarks
D318	1SS355	DIODE	1	
D319	MA151K	DIODE	1	
D320	MA151WK	DIODE	1	
D321	1SS355	DIODE	1	
D802-04	1SS355	DIODE	3	
D1001	MA4051-L	DIODE	1	
D1003	MA4120-M	DIODE	1	
D1004	MA4051-L	DIODE	1	
D1005	1SS355	DIODE	1	
D1007, 08	1SS355	DIODE	2	
D1009	1SS254	DIODE	1	
D2001	MA153	DIODE	1	
D2002	MA151K	DIODE	1	
D2003-05	1SS355	DIODE	3	
D2006, 07	MA700	DIODE	2	
D2008, 09	MA185	DIODE	2	
D2010-13	1SS355	DIODE	4	
D3001, 02	1SS254	DIODE	2	
D3005	MA723-VT	DIODE	1	
D4003-05	1SS254	DIODE	3	
D4007	ERDS2TJ102	C. RESISTOR 1/4W 1K	1	
D4504	1SS254	DIODE	1	
D6001	LN59LT. VT	LED	1	
D6002	MA4075-L	DIODE	1	
D6003	MA151K	DIODE	1	
D7301	MA3082-L	DIODE	1	
D7302	MA151K	DIODE	1	
D7303	MA151WK	DIODE	1	
D7304	MA717	DIODE	1	
D7306	MA151WK	DIODE	1	
D7601	MA4300-M	DIODE	1	
D7704	MA700A	DIODE	1	
D7705	1SS254	DIODE	1	
D7707	1SS254	DIODE	1	
FL7301, 02	VLF0633	FILTER	2	
IC301	TDA9725V2	IC	1	[SUPPLIED FROM MBV]
IC302	TL8850AF	IC	1	
IC0701	LA7576	IC	1	
IC1001	HA17431PA	IC	1	
IC2001	BA6887-V3	IC	1	
IC2002	BA6871BS	IC	1	
IC2003	AN3814K	IC	1	
IC4001	BA7795FS	IC	1	
IC4501	BH7778AK	IC	1	
IC6001	MN675536VR9Y	IC	1	[SUPPLIED FROM MBV]
IC6002, 03	ON1387	PHOTO INTERRUPTER	2	
IC7301	MSP3410B-F7	IC	1	[SUPPLIED FROM MBV]
IC7302	PST7043	IC	1	
IC7303	M5238FP	IC	1	
IC7304	HA17431PA	IC	1	
IC7305	MN155402VZDB	IC	1	
IC7306	PST7043	IC	1	
IC7701	M27C1001BAAA	IC	1	[SUPPLIED FROM MBV]
IC7702	MC74HCT573AW	IC	1	[SUPPLIED FROM MBV]
IC7703	NJM2535M	IC	1	[SUPPLIED FROM MBV]
IC7704	ST24W16FB6	IC	1	[SUPPLIED FROM MBV]
IC7706	SABC513AL16P	IC	1	[SUPPLIED FROM MBV]
IC7708	SAA5281ZPM3	IC	1	
IC7712	MC74HCT74AD	IC	1	[SUPPLIED FROM MBV]
K309	ERJ6GEY0R00	M. RESISTOR CH 1/10W 0	1	
K310	ERJ3GEY0R00	M. RESISTOR CH 1/16W 0	1	
K319	ERJ3GEY0R00	M. RESISTOR CH 1/16W 0	1	
K0702	ERJ3GEY0R00	M. RESISTOR CH 1/16W 0	1	
K0704, 05	ERJ3GEY0R00	M. RESISTOR CH 1/16W 0	2	
K1001	ERJ6GMZ0R00	M. RESISTOR CH 1/10W 0	1	
K3001	ERJ6GMZ0R00	M. RESISTOR CH 1/10W 0	1	
K3005	ERJ6GMZ0R00	M. RESISTOR CH 1/10W 0	1	
K3014, 15	ERJ6GMZ0R00	M. RESISTOR CH 1/10W 0	2	
K4002	ERJ6GMZ0R00	M. RESISTOR CH 1/10W 0	1	
K4004	ERJ6GMZ0R00	M. RESISTOR CH 1/10W 0	1	
K4502-06	ERJ3GEY0R00	M. RESISTOR CH 1/16W 0	5	
K6003	ERJ6GMZ0R00	M. RESISTOR CH 1/10W 0	1	

Ref. No.	Part No.	Part Name & Description	Pcs	Remarks
K6006, 07	ERJ6GMZOR00	M. RESISTOR CH 1/10W 0	2	
K7305-07	ERJ3GEYOR00	M. RESISTOR CH 1/16W 0	3	
K7314	ERJ3GEYOR00	M. RESISTOR CH 1/16W 0	1	
K7317	ERJ3GEYOR00	M. RESISTOR CH 1/16W 0	1	
K7619	ERJ6GMZOR00	M. RESISTOR CH 1/10W 0	1	
K7621	ERJ6GMZOR00	M. RESISTOR CH 1/10W 0	1	
K7624	ERJ6GMZOR00	M. RESISTOR CH 1/10W 0	1	
K7625	ERJ6GEYOR00	M. RESISTOR CH 1/10W 0	1	
K7709	ERJ6GMZOR00	M. RESISTOR CH 1/10W 0	1	
K7712	ERJ6GMZOR00	M. RESISTOR CH 1/10W 0	1	
K7714	ERJ6GMZOR00	M. RESISTOR CH 1/10W 0	1	
L301	VLQ0599J151	COIL 150UH	1	
L302, 03	VLQ0599J100	COIL 10UH	2	
L304	VLQ0599J390	COIL 39UH	1	
L305	VLQ0599J470	COIL 47UH	1	
L306	VLQ0599J101	COIL 100UH	1	
L307	VLQ0599J270	COIL 27UH	1	
L308	VLQ0599J100	COIL 10UH	1	
L309	VLQ0599J470	COIL 47UH	1	
L311, 12	VLQ0599J680	COIL 68UH	2	
L313, 14	VLQ0599J390	COIL 39UH	2	
L315	VLQ0599J101	COIL 100UH	1	
L0701	VLQ0163JR22	COIL 0.22UH	1	
L0705	VLQ0163J2R7	COIL 2.7UH	1	
L0706	VLQEL05S8R2K	COIL 8.2UH	1	
L801	VLQ0599J101	COIL 100UH	1	
L2001	VLP0083	COIL	1	
L3001	VLQ0599J820	COIL 82UH	1	
L3002	VLQ0599J151	COIL 150UH	1	
L3003	VLQ0599J6R8	COIL 6.8UH	1	
L3004	VLQ0599J120	COIL 12UH	1	
L3006	VLQ0599J101	COIL 100UH	1	
L3008	VLQ0599J270	COIL 27UH	1	
L3009	VLQ0599J680	COIL 68UH	1	
L3012	VLQ0599J680	COIL 68UH	1	
L4002	ELESN471KA	INDUCTOR 470UH	1	
L4003	VLQ0599J680	COIL 68UH	1	
L4005, 06	ERJ6GMZOR00	M. RESISTOR CH 1/10W 0	2	
L4007	VLQ0123	COIL	1	
L6001	VLQ0599J101	COIL 100UH	1	
L6002	VLP0083	COIL	1	
L6003, 04	VLQ0599J680	COIL 68UH	2	
L7301	ELEXH100JBV	INDUCTOR 10UH	1	
L7302	ERJ6GEYOR00	M. RESISTOR CH 1/10W 0	1	
L7603, 04	VLQ0599J680	COIL 68UH	2	
L7606	VLQ0599J180	COIL 18UH	1	
L7607, 08	VLQ0599J330	COIL 33UH	2	
L7702	VLQ0599J3R3	COIL 3.3UH	1	
L7704	VLQ0599J100	COIL 10UH	1	
L7705	VLQ0599J101	COIL 100UH	1	
L7707	VLQ0599J120	COIL 12UH	1	
LB303-06	VLP0145	COIL	4	
LB307-11	ERJ6GEYOR00	M. RESISTOR CH 1/10W 0	5	
LB312	VLP0145	COIL	1	
LB1001	VLP0125	COIL	1	
LB3001	VLP0083	COIL	1	
P2001	VJS3640A002	CONNECTOR (FEMALE) 2P	1	
P2002	VJS3537A015G	CONNECTOR (FEMALE) 15P	1	
P2003	VJP3483	CONNECTOR (MALE)	1	
P2005	VJS3537A009G	CONNECTOR (FEMALE) 9P	1	
P3002	VJS3537A020G	CONNECTOR (FEMALE) 20P	1	
P4002	VJS3675E006G	CONNECTOR (FEMALE) 6P	1	
P4003	VJP1230T	CONNECTOR (MALE) 3P	1	
P6001	VJS3639A004	CONNECTOR (FEMALE) 4P	1	
PK301	VJR0776B010W	CONNECTOR (MALE) 10P	1	[SUPPLIED FROM MBV]
PK302	VJR0776B011W	CONNECTOR (MALE) 11P	1	[SUPPLIED FROM MBV]
PK303	VJR0776B012W	CONNECTOR (MALE) 12P	1	[SUPPLIED FROM MBV]
PK304	VJR0776B003W	CONNECTOR (MALE) 3P	1	
PK0701	VJR0816E010W	CONNECTOR (MALE) 10P	1	
PK4501	VJR0777B008W	CONNECTOR (MALE) 8P	1	
PK4502, 03	VJR0777B010W	CONNECTOR (MALE) 10P	2	

Ref. No.	Part No.	Part Name & Description	Pcs	Remarks
PK7301	VJR0777B009W	CONNECTOR (MALE) 9P	1	
PK7302	VJR0777B008W	CONNECTOR (MALE) 8P	1	
PP0701	VJP3589A004B	CONNECTOR (MALE) 4P	1	
PP3002	VJP3042G013W	CONNECTOR (MALE) 13P	1	
PP3003	VJP3042G005W	CONNECTOR (MALE) 5P	1	
PP3004	VJP3042G008W	CONNECTOR (MALE) 8P	1	
PP3005	VJP3042G010W	CONNECTOR (MALE) 10P	1	
PS3001	VJS3673F005G	CONNECTOR (FEMALE) 5P	1	[SUPPLIED FROM MBV]
PS3006	VJS3631A011A	CONNECTOR (FEMALE) 11P	1	
PS6002	VJS3673B025G	CONNECTOR (FEMALE) 25P	1	
Q301, 02	MSD601	TRANSISTOR	2	
Q305	MSD601	TRANSISTOR	1	
Q306	MSB709	TRANSISTOR	1	
Q307	MSB709-R	TRANSISTOR	1	
Q308	MSB709	TRANSISTOR	1	
Q309	MSC2295	TRANSISTOR	1	
Q0701	MSD601-S	TRANSISTOR	1	
Q0702	MSB709-R	TRANSISTOR	1	
Q801	MSB709	TRANSISTOR	1	
Q803	MSC2295	TRANSISTOR	1	
Q804	MSB709	TRANSISTOR	1	
Q805	MSD601	TRANSISTOR	1	
Q1001	MSD601	TRANSISTOR	1	
Q1002-04	2SD1996-S	TRANSISTOR	3	
Q1005	2SD602A	TRANSISTOR	1	
Q1007	2SD2544OPQA	TRANSISTOR	1	
Q3001	MSC2295	TRANSISTOR	1	
Q3002	MSB709	TRANSISTOR	1	
Q3003, 04	MSD601	TRANSISTOR	2	
Q3005	MSC2295	TRANSISTOR	1	
Q3006	MSB709	TRANSISTOR	1	
Q3007	MSC2295	TRANSISTOR	1	
Q3010	MSB709-R	TRANSISTOR	1	
Q3023	MSC2295	TRANSISTOR	1	
Q3024	MSD601	TRANSISTOR	1	
Q3025	MSC2295	TRANSISTOR	1	
Q4005	2SB1320A-R	TRANSISTOR	1	
Q4006	2SD602A-R	TRANSISTOR	1	
Q4007-09	MSD601-R	TRANSISTOR	3	
Q4501	2SD1468	TRANSISTOR	1	
Q4551	2SA1515	TRANSISTOR	1	
Q6001	MSB709	TRANSISTOR	1	
Q6002, 03	PN205LT-NGVT	PHOTO TRANSISTOR	2	
Q7301, 02	2SD1996	TRANSISTOR	2	
Q7304	2SC2404	TRANSISTOR	1	
Q7305	MSD601-S	TRANSISTOR	1	
Q7308	2SB709A	TRANSISTOR	1	
Q7310	2SB709A	TRANSISTOR	1	
Q7311-13	MSD1328-S	TRANSISTOR	3	
Q7601	XN4601	TRANSISTOR-TRANSISTOR	1	
Q7603	2SB710A	TRANSISTOR	1	
Q7701-03	MSB709	TRANSISTOR	3	
Q7705	MSD601	TRANSISTOR	1	
Q7706	MSB709	TRANSISTOR	1	
Q7709-12	MSD601	TRANSISTOR	4	
QR302	MUN2113	TRANSISTOR-RESISTOR	1	
QR305	MUN2213	TRANSISTOR-RESISTOR	1	
QR317	MUN2213	TRANSISTOR-RESISTOR	1	
QR801	MUN2213	TRANSISTOR-RESISTOR	1	
QR1001, 02	MUN2113	TRANSISTOR-RESISTOR	2	
QR1003	MUN2213	TRANSISTOR-RESISTOR	1	
QR3001	MUN2111	TRANSISTOR-RESISTOR	1	
QR3002, 03	DTC363EK	TRANSISTOR-RESISTOR	2	
QR3027	MUN2212	TRANSISTOR-RESISTOR	1	
QR4001	MUN2212	TRANSISTOR-RESISTOR	1	
QR6001	XN1211	TRANSISTOR-RESISTOR	1	
QR6002	UN2114	TRANSISTOR-RESISTOR	1	
QR6004	XN1213	TRANSISTOR-RESISTOR	1	
QR7301	MUN2213	TRANSISTOR-RESISTOR	1	
QR7302	MUN2112	TRANSISTOR-RESISTOR	1	
QR7601	MUN2213	TRANSISTOR-RESISTOR	1	

Ref. No.	Part No.	Part Name & Description	Pcs	Remarks
QR7602	MUN2212	TRANSISTOR-RESISTOR	1	
QR7603	MUN2213	TRANSISTOR-RESISTOR	1	
R303	ERJ3GEYJ182	M. RESISTOR CH 1/16W 1.8K	1	
R304	ERJ3GEYJ225	M. RESISTOR CH 1/16W 2.2M	1	
R305	ERJ3GEYG682	M. RESISTOR CH 1/16W 6.8K	1	
R307	ERJ3GEYJ271	M. RESISTOR CH 1/16W 270	1	
R308	ERJ3GEYG102	M. RESISTOR CH 1/16W 1K	1	
R309	ERJ3GEYJ271	M. RESISTOR CH 1/16W 270	1	
R310, 11	ERJ3GEYG152	M. RESISTOR CH 1/16W 1.5K	2	
R312	ERJ3GEYG472	M. RESISTOR CH 1/16W 4.7K	1	
R313	ERJ3GEYJ473	M. RESISTOR CH 1/16W 47K	1	
R314	ERJ3GEYJ683	M. RESISTOR CH 1/16W 68K	1	
R315	ERJ3GEYJ223	M. RESISTOR CH 1/16W 22K	1	
R316	ERJ3GEYJ103	M. RESISTOR CH 1/16W 10K	1	
R317	ERJ3GEYG472	M. RESISTOR CH 1/16W 4.7K	1	
R319	ERJ3GEYJ183	M. RESISTOR CH 1/16W 18K	1	
R320	ERJ3GEYJ821	M. RESISTOR CH 1/16W 820	1	
R321	ERJ3GEYJ120	M. RESISTOR CH 1/16W 12	1	
R322	ERJ3GEYJ223	M. RESISTOR CH 1/16W 22K	1	
R323	ERJ3GEYG102	M. RESISTOR CH 1/16W 1K	1	
R324, 25	ERJ3GEYJ103	M. RESISTOR CH 1/16W 10K	2	
R326	ERJ3GEYJ242	M. RESISTOR CH 1/16W 2.4K	1	
R327	ERJ3GEYG102	M. RESISTOR CH 1/16W 1K	1	
R328	ERJ3GEYJ272	M. RESISTOR CH 1/16W 2.7K	1	
R329	ERJ3GEYJ182	M. RESISTOR CH 1/16W 1.8K	1	
R330	ERJ3GEYJ122	M. RESISTOR CH 1/16W 1.2K	1	
R332	ERJ3GEYJ390	M. RESISTOR CH 1/16W 39	1	
R333	ERJ3GEYJ561	M. RESISTOR CH 1/16W 560	1	
R335	ERJ3GEYJ122	M. RESISTOR CH 1/16W 1.2K	1	
R337	ERJ3GEYJ561	M. RESISTOR CH 1/16W 560	1	
R338	ERJ3GEYG471	M. RESISTOR CH 1/16W 470	1	
R339	ERJ3GEYJ333	M. RESISTOR CH 1/16W 33K	1	
R340	ERJ3GEYJ182	M. RESISTOR CH 1/16W 1.8K	1	
R341	ERJ3GEYJ101	M. RESISTOR CH 1/16W 100	1	
R344	ERJ3GEYJ473	M. RESISTOR CH 1/16W 47K	1	
R347	ERJ3GEYJ473	M. RESISTOR CH 1/16W 47K	1	
R353	ERJ3GEYG102	M. RESISTOR CH 1/16W 1K	1	
R354	ERJ3GEYJ681	M. RESISTOR CH 1/16W 680	1	
R355	ERJ3GEYJ331	M. RESISTOR CH 1/16W 330	1	
R356, 57	ERJ3GEYJ821	M. RESISTOR CH 1/16W 820	2	
R359	ERJ3GEYG102	M. RESISTOR CH 1/16W 1K	1	
R360	ERJ3GEYJ221	M. RESISTOR CH 1/16W 220	1	
R369	ERJ3GEYJ393	M. RESISTOR CH 1/16W 39K	1	
R374	ERJ3GEYG102	M. RESISTOR CH 1/16W 1K	1	
R375	ERJ3GEYJ101	M. RESISTOR CH 1/16W 100	1	
R376	ERJ3GEYJ470	M. RESISTOR CH 1/16W 47	1	
R0702	ERJ3GEYJ272	M. RESISTOR CH 1/16W 2.7K	1	
R0704	ERJ3GEYJ222	M. RESISTOR CH 1/16W 2.2K	1	
R0705	ERJ3GEYJ562	M. RESISTOR CH 1/16W 5.6K	1	
R0706, 07	ERJ3GEYJ272	M. RESISTOR CH 1/16W 2.7K	2	
R0708	ERJ3GEYG152	M. RESISTOR CH 1/16W 1.5K	1	
R0709	ERJ3GEYJ105	M. RESISTOR CH 1/16W 1M	1	
R0710	ERJ6GEYG154	M. RESISTOR CH 1/10W 150K	1	
R0713	ERJ3GEYJ241	M. RESISTOR CH 1/16W 240	1	[SUPPLIED FROM MBV]
R0714	ERJ3GEYJ470	M. RESISTOR CH 1/16W 47	1	
R0715	ERJ3GEYJ183	M. RESISTOR CH 1/16W 18K	1	
R0716	VRE0040E151	M. RESISTOR CH 1/10W 150	1	
R0717	ERJ3GEYJ330	M. RESISTOR CH 1/16W 33	1	
R0718	ERJ3GEYG102	M. RESISTOR CH 1/16W 1K	1	
R0719	ERJ6GEYF822	M. RESISTOR CH 1/10W 8.2K	1	
R0720	ERJ3GEYG102	M. RESISTOR CH 1/16W 1K	1	
R0722	ERJ3GEYJ101	M. RESISTOR CH 1/16W 100	1	
R0728	ERJ3GEYG471	M. RESISTOR CH 1/16W 470	1	
R0729	ERJ3GEYG102	M. RESISTOR CH 1/16W 1K	1	
R0732	ERJ3GEYG471	M. RESISTOR CH 1/16W 470	1	
R0783	ERJ3GEYJ393	M. RESISTOR CH 1/16W 39K	1	
R801	ERJ3GEYJ222	M. RESISTOR CH 1/16W 2.2K	1	
R802	ERJ3GEYG681	M. RESISTOR CH 1/16W 680	1	
R803	ERJ3GEYG182	M. RESISTOR CH 1/16W 1.8K	1	
R810	ERJ3GEYJ103	M. RESISTOR CH 1/16W 10K	1	
R811	ERJ3GEYJ273	M. RESISTOR CH 1/16W 27K	1	
R812	ERJ3GEYJ563	M. RESISTOR CH 1/16W 56K	1	
R813	ERJ3GEYG561	M. RESISTOR CH 1/16W 560	1	
R814	ERJ3GEYG103	M. RESISTOR CH 1/16W 10K	1	

Ref. No.	Part No.	Part Name & Description	Pcs	Remarks
R815	ERJ3GEYG681	M. RESISTOR CH 1/16W 680	1	
R816	ERJ3GEYG181	M. RESISTOR CH 1/16W 180	1	
R817	ERJ3GEYG101	M. RESISTOR CH 1/16W 100	1	[SUPPLIED FROM MBV]
R818	ERJ3GEYG242	M. RESISTOR CH 1/16W 2.4K	1	
R1001	ERJ6GMYG333	M. RESISTOR CH 1/10W 33K	1	
R1002	ERDS2TJ102	C. RESISTOR 1/4W 1K	1	
R1003	ERJ6GMYG272	M. RESISTOR CH 1/10W 2.7K	1	
R1004	ERJ6GMYJ363	M. RESISTOR CH 1/10W 36K	1	
R1005	ERJ6GMYG272	M. RESISTOR CH 1/10W 2.7K	1	
R1006	ERDS2TJ122	C. RESISTOR 1/4W 1.2K	1	
R1007	ERJ6GMYG102	M. RESISTOR CH 1/10W 1K	1	
R1008	ERJ6GMYG333	M. RESISTOR CH 1/10W 33K	1	
R1009, 10	ERJ6GMYG562	M. RESISTOR CH 1/10W 5.6K	2	
R1011	ERDS1TJ272	C. RESISTOR 1/2W 2.7K	1	
R2001	ERJ6GMYG913	M. RESISTOR CH 1/10W 91K	1	
R2002-04	ERJ6GMYG102	M. RESISTOR CH 1/10W 1K	3	
R2005	ERX1SJ1R8	M. RESISTOR 1W 1.8	1	
R2006	ERJ6GMYG512	M. RESISTOR CH 1/10W 5.1K	1	
R2007	ERJ6GMYG222	M. RESISTOR CH 1/10W 2.2K	1	
R2009, 10	ERJ6GMYG103	M. RESISTOR CH 1/10W 10K	2	
R2011	ERJ6GMYG102	M. RESISTOR CH 1/10W 1K	1	
R2012	ERJ6GMYJ221	M. RESISTOR CH 1/10W 220	1	
R2013	ERJ6GMYG272	M. RESISTOR CH 1/10W 2.7K	1	
R2014, 15	ERJ6GMYJ223	M. RESISTOR CH 1/10W 22K	2	
R2016	ERJ6GMYG222	M. RESISTOR CH 1/10W 2.2K	1	
R2017, 18	ERJ6GMYJ223	M. RESISTOR CH 1/10W 22K	2	
R2019	ERJ6GMYG103	M. RESISTOR CH 1/10W 10K	1	
R2020	ERJ6GMYG471	M. RESISTOR CH 1/10W 470	1	
R2021	ERJ6GMYG103	M. RESISTOR CH 1/10W 10K	1	
R2022	ERJ6GMYG222	M. RESISTOR CH 1/10W 2.2K	1	
R2023	ERDS2CKG8200	M. RESISTOR 1/4W 820	1	
R2024	ERDS2CKG6800	M. RESISTOR 1/4W 680	1	
R2025	ERJ6GMYG102	M. RESISTOR CH 1/10W 1K	1	
R2026, 27	ERDS2TJ560	C. RESISTOR 1/4W 56	2	
R2028	ERDS1TJ561	C. RESISTOR 1/2W 560	1	
R2029	ERJ6GMYG222	M. RESISTOR CH 1/10W 2.2K	1	
R2030	ERJ6GMYG432	M. RESISTOR CH 1/10W 4.3K	1	
R2031	ERJ6GMYG473	M. RESISTOR CH 1/10W 47K	1	
R2032	ERJ6GMYG103	M. RESISTOR CH 1/10W 10K	1	
R2033	ERJ6GMYJ684	M. RESISTOR CH 1/10W 680K	1	
R2034	ERJ6GMYG133	M. RESISTOR CH 1/10W 13K	1	
R2035	ERJ6GMYJ105	M. RESISTOR CH 1/10W 1M	1	
R2036, 37	ERJ6GMYG472	M. RESISTOR CH 1/10W 4.7K	2	
R2038	ERJ6GMYG102	M. RESISTOR CH 1/10W 1K	1	
R2039, 40	ERJ6GMYJ105	M. RESISTOR CH 1/10W 1M	2	
R2041, 42	ERJ6GMYG392	M. RESISTOR CH 1/10W 3.9K	2	
R2043	ERDS2TJ560	C. RESISTOR 1/4W 56	1	
R2044	ERX12SJR47	M. RESISTOR 1/2W 0.47	1	
R2045	ERDS2FJ1R5	C. RESISTOR 1/4W 1.5	1	
R2046-48	ERDS2TJ330	C. RESISTOR 1/4W 33	3	
R2049	ERDS2FJ1R2	C. RESISTOR 1/4W 1.2	1	
R2050, 51	ERJ6GMYG332	M. RESISTOR CH 1/10W 3.3K	2	
R2052	ERDS2TJ122	C. RESISTOR 1/4W 1.2K	1	
R3001	ERJ6GMYG561	M. RESISTOR CH 1/10W 560	1	
R3002	ERJ6GMYG472	M. RESISTOR CH 1/10W 4.7K	1	
R3003	ERJ6GMYG222	M. RESISTOR CH 1/10W 2.2K	1	
R3004	ERJ6GMYG272	M. RESISTOR CH 1/10W 2.7K	1	
R3005	ERJ6GMYG332	M. RESISTOR CH 1/10W 3.3K	1	
R3006	ERDS2TJ472	C. RESISTOR 1/4W 4.7K	1	
R3007	ERJ6GMYG681	M. RESISTOR CH 1/10W 680	1	
R3008	ERJ6GMYG222	M. RESISTOR CH 1/10W 2.2K	1	
R3009	ERJ6GMYG392	M. RESISTOR CH 1/10W 3.9K	1	
R3012	ERJ6GMZ0R00	M. RESISTOR CH 1/10W 0	1	
R3015	ERJ6GMYG222	M. RESISTOR CH 1/10W 2.2K	1	
R3018	ERJ6GMYJ223	M. RESISTOR CH 1/10W 22K	1	
R3019, 20	ERJ6GMYG561	M. RESISTOR CH 1/10W 560	2	
R3021	ERJ6GMYJ391	M. RESISTOR CH 1/10W 390	1	
R3022	ERJ6GMYG102	M. RESISTOR CH 1/10W 1K	1	
R3023, 24	ERJ6GMYG821	M. RESISTOR CH 1/10W 820	2	
R3025	ERJ6GMYG152	M. RESISTOR CH 1/10W 1.5K	1	
R3026	ERJ6GMYG102	M. RESISTOR CH 1/10W 1K	1	
R3029	ERJ6GMYG222	M. RESISTOR CH 1/10W 2.2K	1	
R3030	ERJ6GEYG103	M. RESISTOR CH 1/10W 10K	1	
R3031	ERJ6GEYG102	M. RESISTOR CH 1/10W 1K	1	
R3032	ERJ6GMYG334	M. RESISTOR CH 1/10W 330K	1	

Ref. No.	Part No.	Part Name & Description	Pcs	Remarks
R3033	ERJ6GMYJ223	M. RESISTOR CH 1/10W 22K	1	
R3034	ERJ6GMYG103	M. RESISTOR CH 1/10W 10K	1	
R3037	ERDS2TJ102	C. RESISTOR 1/4W 1K	1	
R3039	ERJ6GMYG102	M. RESISTOR CH 1/10W 1K	1	
R3065	ERJ6GMYG103	M. RESISTOR CH 1/10W 10K	1	
R3068, 69	ERJ6GMYG103	M. RESISTOR CH 1/10W 10K	2	
R3076, 77	ERJ6GMYG103	M. RESISTOR CH 1/10W 10K	2	
R3078	ERDS2T0	C. RESISTOR 1/4W 0	1	
R3079, 80	ERJ6GMYG102	M. RESISTOR CH 1/10W 1K	2	
R3081	ERJ6GMYJ221	M. RESISTOR CH 1/10W 220	1	
R3082	ERJ6GMYG152	M. RESISTOR CH 1/10W 1.5K	1	
R3083	ERDS2TJ102	C. RESISTOR 1/4W 1K	1	
R3084	ERDS2TJ330	C. RESISTOR 1/4W 33	1	
R3085	ERJ6GMYG102	M. RESISTOR CH 1/10W 1K	1	
R3087	ERJ6GMYG563	M. RESISTOR CH 1/10W 56K	1	
R4003	ERJ6GMYG100	M. RESISTOR CH 1/10W 10	1	
R4007	ERJ6GMYG153	M. RESISTOR CH 1/10W 15K	1	
R4011	ERJ6GMYG103	M. RESISTOR CH 1/10W 10K	1	
R4012	ERJ6GMYG123	M. RESISTOR CH 1/10W 12K	1	
R4013	ERJ6GMYJ163	M. RESISTOR CH 1/10W 16K	1	
R4014	ERJ6GMYG562	M. RESISTOR CH 1/10W 5.6K	1	
R4015	ERJ6GMYG333	M. RESISTOR CH 1/10W 33K	1	
R4016	ERJ6GMYJ223	M. RESISTOR CH 1/10W 22K	1	
R4017	ERJ6GMYG133	M. RESISTOR CH 1/10W 1.3K	1	
R4019	ERJ6GMYJ105	M. RESISTOR CH 1/10W 1M	1	
R4020	ERJ6GMYG123	M. RESISTOR CH 1/10W 12K	1	
R4021	ERJ6GMYG393	M. RESISTOR CH 1/10W 39K	1	
R4022	ERJ6GMYG391	M. RESISTOR CH 1/10W 390	1	
R4023	ERJ6GMYG394	M. RESISTOR CH 1/10W 390K	1	
R4024	ERDS2TJ221	C. RESISTOR 1/4W 220	1	
R4025	ERJ6GMYG682	M. RESISTOR CH 1/10W 6.8K	1	
R4026	ERJ6GMYG473	M. RESISTOR CH 1/10W 47K	1	
R4027, 28	ERJ6GMYG103	M. RESISTOR CH 1/10W 10K	2	
R4029	ERJ6GMYG912	M. RESISTOR CH 1/10W 9.1K	1	
R4030	ERJ6GMZ0R00	M. RESISTOR CH 1/10W 0	1	
R4031	ERJ6GMYG222	M. RESISTOR CH 1/10W 2.2K	1	
R4032	ERJ6GMYG271	M. RESISTOR CH 1/10W 270	1	
R4033	ERJ6GMYG681	M. RESISTOR CH 1/10W 680	1	
R4034	ERJ6GMYG183	M. RESISTOR CH 1/10W 18K	1	
R4035, 36	ERJ6GMYJ223	M. RESISTOR CH 1/10W 22K	2	
R4037	ERJ6GMYG103	M. RESISTOR CH 1/10W 10K	1	
R4038	ERJ6GMYG332	M. RESISTOR CH 1/10W 3.3K	1	
R4039	ERJ6GMYG102	M. RESISTOR CH 1/10W 1K	1	
R4040	ERDS2TJ102	C. RESISTOR 1/4W 1K	1	
R4041, 42	ERJ6GMYG393	M. RESISTOR CH 1/10W 39K	2	
R4043	ERG2SJ821	M. RESISTOR 2W 820	1	
R4044	ERDS2TJ102	C. RESISTOR 1/4W 1K	1	
R4048	ERJ6GMYG473	M. RESISTOR CH 1/10W 47K	1	
R4049	ERJ6GMYG682	M. RESISTOR CH 1/10W 6.8K	1	
R4050	ERJ6GMYJ221	M. RESISTOR CH 1/10W 220	1	
R4051	ERJ6GMYG822	M. RESISTOR CH 1/10W 8.2K	1	
R4054	ERJ6GMZ0R00	M. RESISTOR CH 1/10W 0	1	
R4055	ERJ6GMYG153	M. RESISTOR CH 1/10W 15K	1	
R4056	ERJ6GMYG393	M. RESISTOR CH 1/10W 39K	1	
R4057	ERJ6GMYG272	M. RESISTOR CH 1/10W 2.7K	1	
R4058	ERJ6GMYG472	M. RESISTOR CH 1/10W 4.7K	1	
R4059	ERJ6GMYG332	M. RESISTOR CH 1/10W 3.3K	1	
R4067, 68	ERJ6GMZ0R00	M. RESISTOR CH 1/10W 0	2	
R4071	ERJ6GMZ0R00	M. RESISTOR CH 1/10W 0	1	
R4073	ERJ6GMYG103	M. RESISTOR CH 1/10W 10K	1	
R4503	ERJ3RBD203	M. RESISTOR CH 1/16W 20K	1	
R4504	ERJ3GEYG224	M. RESISTOR CH 1/16W 220K	1	
R4508	ERJ3GEYG224	M. RESISTOR CH 1/16W 220K	1	
R4512	ERJ3RBD113	M. RESISTOR CH 1/16W 11K	1	
R4513	ERJ3GEYJ103	M. RESISTOR CH 1/16W 10K	1	
R4517, 18	ERJ3GEYJ221	M. RESISTOR CH 1/16W 220	2	
R4519, 20	ERJ3GEYJ103	M. RESISTOR CH 1/16W 10K	2	
R4522	ERJ3GEYK225	M. RESISTOR CH 1/16W 2.2M	1	
R4528	ERJ3RBD153	M. RESISTOR CH 1/16W 15K	1	
R4529	ERJ3GEYG562	M. RESISTOR CH 1/16W 5.6K	1	
R4530	ERJ3GEYJ334	M. RESISTOR CH 1/16W 330K	1	
R4534	ERJ3GEYJ103	M. RESISTOR CH 1/16W 10K	1	
R4542	ERJ3GEYJ223	M. RESISTOR CH 1/16W 22K	1	
R4562	ERJ3RBD822	M. RESISTOR CH 1/16W 8.2K	1	
R4563	ERJ3GEYJ272	M. RESISTOR CH 1/16W 2.7K	1	

Ref. No.	Part No.	Part Name & Description	Pcs	Remarks
R4584	ERJ3GEYJ103	M. RESISTOR CH 1/16W 10K	1	
R4585	ERJ3GEY0R00	M. RESISTOR CH 1/16W 0	1	
R4586	ERJ3GEYJ103	M. RESISTOR CH 1/16W 10K	1	
R4601	ERJ3GEYJ473	M. RESISTOR CH 1/16W 47K	1	
R4603, 04	ERJ3GEYJ473	M. RESISTOR CH 1/16W 47K	2	
R4605	ERJ6GEYG203	M. RESISTOR CH 1/10W 20K	1	
R4606	ERJ3GEYJ203	M. RESISTOR CH 1/16W 20K	1	
R4607	ERJ3GEYJ473	M. RESISTOR CH 1/16W 47K	1	
R4608	ERDS2TJ103	C. RESISTOR 1/4W 10K	1	
R4621	ERJ6GEYG163	M. RESISTOR CH 1/10W 16K	1	
R4623	ERJ3GEYJ221	M. RESISTOR CH 1/16W 220	1	
R4624	ERJ3GEYJ103	M. RESISTOR CH 1/16W 10K	1	
R4641, 42	ERJ3GEY0R00	M. RESISTOR CH 1/16W 0	2	
R4663, 64	ERJ3GEYJ103	M. RESISTOR CH 1/16W 10K	2	
R4695	ERJ3GEYJ473	M. RESISTOR CH 1/16W 47K	1	
R4697	ERJ6GEYG562	M. RESISTOR CH 1/10W 5.6K	1	
R4698	ERJ3GEYJ393	M. RESISTOR CH 1/16W 39K	1	
R4704	ERJ3GEYJ393	M. RESISTOR CH 1/16W 39K	1	
R6001	ERJ6GMYJ201	M. RESISTOR CH 1/10W 200	1	
R6002	ERJ6GMYG272	M. RESISTOR CH 1/10W 2.7K	1	
R6003-05	ERJ6GMYG333	M. RESISTOR CH 1/10W 33K	3	
R6006, 07	ERJ6GMYG223	M. RESISTOR CH 1/10W 22K	2	
R6008	ERJ6GMYG272	M. RESISTOR CH 1/10W 2.7K	1	
R6009	ERJ6GMYG103	M. RESISTOR CH 1/10W 10K	1	
R6010	ERJ6GMYG272	M. RESISTOR CH 1/10W 2.7K	1	
R6011	ERJ6GMYG102	M. RESISTOR CH 1/10W 1K	1	
R6012, 13	ERJ6GMYG101	M. RESISTOR CH 1/10W 100	2	
R6014	ERJ6GMYG473	M. RESISTOR CH 1/10W 47K	1	
R6015	ERJ6GMYG104	M. RESISTOR CH 1/10W 100K	1	
R6016	ERJ6GMYJ683	M. RESISTOR CH 1/10W 68K	1	
R6017	ERDS2TJ103	C. RESISTOR 1/4W 10K	1	
R6018	ERJ6GMYG103	M. RESISTOR CH 1/10W 10K	1	
R6019	ERDS2TJ473	C. RESISTOR 1/4W 47K	1	
R6020	ERJ6GMYG104	M. RESISTOR CH 1/10W 100K	1	
R6021-23	ERJ6GMYG101	M. RESISTOR CH 1/10W 100	3	
R6024	ERJ6GMYG222	M. RESISTOR CH 1/10W 2.2K	1	
R6025	ERJ6GMYG103	M. RESISTOR CH 1/10W 10K	1	
R6026	ERJ6GMYG473	M. RESISTOR CH 1/10W 47K	1	
R6027	ERJ6GMYG102	M. RESISTOR CH 1/10W 1K	1	
R6028	ERJ6GMYG392	M. RESISTOR CH 1/10W 3.9K	1	
R6029, 30	ERJ6GMYG272	M. RESISTOR CH 1/10W 2.7K	2	
R6033	ERJ6GMYG272	M. RESISTOR CH 1/10W 2.7K	1	
R6034	ERJ6GMYG102	M. RESISTOR CH 1/10W 1K	1	
R6035, 36	ERJ6GMYJ221	M. RESISTOR CH 1/10W 220	2	
R6037, 38	ERJ6GMYG102	M. RESISTOR CH 1/10W 1K	2	
R6039	ERDS2TJ271	C. RESISTOR 1/4W 270	1	
R6040, 41	ERJ6GMYJ683	M. RESISTOR CH 1/10W 68K	2	
R6043	ERJ6GMYG392	M. RESISTOR CH 1/10W 3.9K	1	
R6044	ERJ6GMYG103	M. RESISTOR CH 1/10W 10K	1	
R6046	ERJ6GMYG103	M. RESISTOR CH 1/10W 10K	1	
R6048	ERJ6GMYG103	M. RESISTOR CH 1/10W 10K	1	
R6049	ERDS2TJ102	C. RESISTOR 1/4W 1K	1	
R6050	ERJ6GMYG102	M. RESISTOR CH 1/10W 1K	1	
R6052	ERJ6GMYG103	M. RESISTOR CH 1/10W 10K	1	
R6054	ERJ6GMYG472	M. RESISTOR CH 1/10W 4.7K	1	
R6055	ERJ6GMYG183	M. RESISTOR CH 1/10W 18K	1	
R6056-58	ERJ6GMYG102	M. RESISTOR CH 1/10W 1K	3	
R6059	ERJ6GMYG103	M. RESISTOR CH 1/10W 10K	1	
R6060	ERJ6GMYG822	M. RESISTOR CH 1/10W 8.2K	1	
R6061	ERJ6GMYG243	M. RESISTOR CH 1/10W 24K	1	
R7301	ERJ6GEYG182	M. RESISTOR CH 1/10W 1.8K	1	
R7302	ERJ3GEYG472	M. RESISTOR CH 1/16W 4.7K	1	
R7303	ERJ3GEYG152	M. RESISTOR CH 1/16W 1.5K	1	
R7308	ERJ3GEYJ121	M. RESISTOR CH 1/16W 120	1	
R7309, 10	ERJ6GEYF561	M. RESISTOR CH 1/10W 560	2	
R7311	ERJ6GEYG221	M. RESISTOR CH 1/10W 220	1	
R7312	ERJ6GEYG152	M. RESISTOR CH 1/10W 1.5K	1	
R7313, 14	ERJ3GEYG272	M. RESISTOR CH 1/16W 2.7K	2	
R7315	ERJ3GEYJ114	M. RESISTOR CH 1/16W 110K	1	
R7316	ERJ3GEYJ223	M. RESISTOR CH 1/16W 22K	1	
R7317	ERJ3GEYJ473	M. RESISTOR CH 1/16W 47K	1	
R7320	ERJ3GEYJ104	M. RESISTOR CH 1/16W 100K	1	
R7321-23	ERJ3GEYJ333	M. RESISTOR CH 1/16W 33K	3	
R7324	ERJ3GEYJ103	M. RESISTOR CH 1/16W 10K	1	
R7325	ERJ3GEYG102	M. RESISTOR CH 1/16W 1K	1	

Ref.No.	Part No.	Part Name & Description	Pcs	Remarks
R7326	ERJ3GEYJ104	M.RESISTOR CH 1/16W 100K	1	
R7327-29	ERJ3GEYJ333	M.RESISTOR CH 1/16W 33K	3	
R7330	ERJ3GEY0R00	M.RESISTOR CH 1/16W 0	1	
R7332	ERJ3GEYG102	M.RESISTOR CH 1/16W 1K	1	
R7333	ERJ3GEYJ104	M.RESISTOR CH 1/16W 100K	1	
R7334-36	ERJ3GEYJ333	M.RESISTOR CH 1/16W 33K	3	
R7337	ERJ3GEY0R00	M.RESISTOR CH 1/16W 0	1	
R7339	ERJ3GEYG102	M.RESISTOR CH 1/16W 1K	1	
R7341-43	ERJ6GEYJ471	M.RESISTOR CH 1/10W 470	3	
R7344	ERJ3GEYG102	M.RESISTOR CH 1/16W 1K	1	
R7345,46	ERJ3GEYJ473	M.RESISTOR CH 1/16W 47K	2	
R7350	ERJ3GEYG102	M.RESISTOR CH 1/16W 1K	1	
R7351	ERJ3GEYJ473	M.RESISTOR CH 1/16W 47K	1	
R7352-56	ERJ3GEYJ103	M.RESISTOR CH 1/16W 10K	5	
R7357	ERJ3GEYG472	M.RESISTOR CH 1/16W 4.7K	1	
R7362	ERJ3GEYG682	M.RESISTOR CH 1/16W 6.8K	1	
R7366	ERJ3GEYG102	M.RESISTOR CH 1/16W 1K	1	
R7367	ERJ3GEYJ103	M.RESISTOR CH 1/16W 10K	1	
R7368	ERJ3GEYG102	M.RESISTOR CH 1/16W 1K	1	
R7370	ERJ3GEYJ103	M.RESISTOR CH 1/16W 10K	1	
R7376,77	ERJ3GEYJ104	M.RESISTOR CH 1/16W 100K	2	
R7378	ERJ3GEYG152	M.RESISTOR CH 1/16W 1.5K	1	
R7379	ERJ3GEY0R00	M.RESISTOR CH 1/16W 0	1	
R7381	ERJ3GEY0R00	M.RESISTOR CH 1/16W 0	1	
R7383	ERJ3GEY0R00	M.RESISTOR CH 1/16W 0	1	
R7601	ERJ6GMYG151	M.RESISTOR CH 1/10W 150	1	
R7602,03	ERJ6GMYJ683	M.RESISTOR CH 1/10W 68K	2	
R7604	ERJ6GMYG151	M.RESISTOR CH 1/10W 150	1	
R7605-07	ERJ6GMYG102	M.RESISTOR CH 1/10W 1K	3	
R7612	ERG2SJ331	M.RESISTOR 2W 330	1	
R7614	ERJ6GMYG561	M.RESISTOR CH 1/10W 560	1	
R7615	ERJ6GMYG103	M.RESISTOR CH 1/10W 10K	1	
R7616	ERG2SJ331	M.RESISTOR 2W 330	1	
R7618	ERJ6GMYG472	M.RESISTOR CH 1/10W 4.7K	1	
R7619	ERJ6GMYG103	M.RESISTOR CH 1/10W 10K	1	
R7622,23	ERJ6GMZ0R00	M.RESISTOR CH 1/10W 0	2	
R7624	ERJ6GMYG103	M.RESISTOR CH 1/10W 10K	1	
R7625	ERJ6GMYG272	M.RESISTOR CH 1/10W 2.7K	1	
R7626	ERJ6GMYG222	M.RESISTOR CH 1/10W 2.2K	1	
R7703,04	ERJ6GMYG101	M.RESISTOR CH 1/10W 100	2	
R7705	ERJ6GMYG102	M.RESISTOR CH 1/10W 1K	1	
R7706	ERJ6GMYG273	M.RESISTOR CH 1/10W 27K	1	
R7707	ERJ6GMYG102	M.RESISTOR CH 1/10W 1K	1	
R7708	ERJ6GMYG222	M.RESISTOR CH 1/10W 2.2K	1	
R7709,10	ERJ6GMYG472	M.RESISTOR CH 1/10W 4.7K	2	
R7711	ERJ6GMYJ511	M.RESISTOR CH 1/10W 510	1	
R7712	ERJ6GMYG561	M.RESISTOR CH 1/10W 560	1	
R7713	ERJ6GMYG102	M.RESISTOR CH 1/10W 1K	1	
R7714-19	ERJ6GMYG101	M.RESISTOR CH 1/10W 100	6	
R7723	ERJ6GMYG472	M.RESISTOR CH 1/10W 4.7K	1	
R7725	ERJ6GMYG332	M.RESISTOR CH 1/10W 3.3K	1	
R7732	ERJ6GMYG472	M.RESISTOR CH 1/10W 4.7K	1	
R7733	ERJ6GMYG104	M.RESISTOR CH 1/10W 100K	1	
R7735	ERJ6GMYG104	M.RESISTOR CH 1/10W 100K	1	
R7736	ERJ6GMYG472	M.RESISTOR CH 1/10W 4.7K	1	
R7737,38	ERJ6GMYJ221	M.RESISTOR CH 1/10W 220	2	
R7739	ERJ6GMYG102	M.RESISTOR CH 1/10W 1K	1	
R7740	ERJ6GMYG911	M.RESISTOR CH 1/10W 910	1	
R7746	ERJ6GMYG393	M.RESISTOR CH 1/10W 39K	1	
R7747	ERJ6GMYG472	M.RESISTOR CH 1/10W 4.7K	1	
R7750	ERJ6GMYG331	M.RESISTOR CH 1/10W 330	1	
R7751,52	ERJ6GMYG102	M.RESISTOR CH 1/10W 1K	2	
R7754	ERJ6GMYG102	M.RESISTOR CH 1/10W 1K	1	
R7755	ERJ6GMYG202	M.RESISTOR CH 1/10W 2K	1	
R7758	ERJ6GMYG273	M.RESISTOR CH 1/10W 27K	1	
R7759	ERJ6GMYJ362	M.RESISTOR CH 1/10W 3.6K	1	
R7760	ERJ6GMYG752	M.RESISTOR CH 1/10W 7.5K	1	
R7761	ERJ6GMYG272	M.RESISTOR CH 1/10W 2.7K	1	
R7762	ERJ6GMYG202	M.RESISTOR CH 1/10W 2K	1	
R7763	ERJ6GMYJ302	M.RESISTOR CH 1/10W 3K	1	
R7766-68	ERJ6GMYG101	M.RESISTOR CH 1/10W 100	3	
R7769	ERJ6GMYG273	M.RESISTOR CH 1/10W 27K	1	
R7770	ERJ6GMYG224	M.RESISTOR CH 1/10W 220K	1	
R7771	ERJ6GMYG104	M.RESISTOR CH 1/10W 100K	1	
R7772	ERDS2TJ221	C.RESISTOR 1/4W 220	1	

Ref.No.	Part No.	Part Name & Description	Pcs	Remarks
R7773	ERJ6GMYJ223	M.RESISTOR CH 1/10W 22K	1	
R7774	ERJ6GMYG104	M.RESISTOR CH 1/10W 100K	1	
R7775	ERJ6GMYG473	M.RESISTOR CH 1/10W 47K	1	
R7776	ERJ6GMYG472	M.RESISTOR CH 1/10W 4.7K	1	
R7777	ERJ6GMYK225	M.RESISTOR CH 1/10W 2.2M	1	
R7781	ERJ6GMYG224	M.RESISTOR CH 1/10W 220K	1	
R7782	ERJ6GMYG101	M.RESISTOR CH 1/10W 100	1	
R7785	ERJ6GMYG101	M.RESISTOR CH 1/10W 100	1	
R7786,87	ERJ6GMYJ221	M.RESISTOR CH 1/10W 220	2	
R7788	ERJ6GMYG103	M.RESISTOR CH 1/10W 10K	1	
R7789	ERJ6GMYG154	M.RESISTOR CH 1/10W 150K	1	
RX7701	EXBF9E103J	RESISTOR-RESISTOR	1	
S6001	VES0709	SWITCH	1	
T0703	EQV5EC071A	TRANSFORMER	1	
T0704	EQV5EC072A	TRANSFORMER	1	
T4002	EIQ7QF014Q	TRANSFORMER	1	
⚠ TU7601	ENG47264G1	TUNER	1	[SUPPLIED FROM MBV]
VR0701	EVNCBAA00B24	V.RESISTOR 20K	1	
VR2001	EVNCYAA03B54	V.RESISTOR 50K	1	
VR3001,02	EVNCYAA03B23	V.RESISTOR 2K	2	
VR3012,13	EVNCYAA03B52	V.RESISTOR 500	2	
VR3014	EVNCYAA03B54	V.RESISTOR 50K	1	
VR4001	EVNCYAA03B15	V.RESISTOR 100K	1	
VR4501	EVMECSA00BS3	V.RESISTOR 6.8K	1	
VR4509	EVMECSA00B53	V.RESISTOR 5K	1	
VR4550	EVMECSA00B14	V.RESISTOR 10K	1	
X301	VSX0162	CRYSTAL OSCILLATOR	1	
X0701	VLF1180	FILTER	1	
X0703	EFCT6M65MW3B	FILTER	1	[SUPPLIED FROM MBV]
X0704	VLF1369	FILTER	1	[SUPPLIED FROM MBV]
X6001	VSX0583	CRYSTAL OSCILLATOR	1	
X7302	VSX0877	CRYSTAL OSCILLATOR	1	[SUPPLIED FROM MBV]
X7303	EFOEC4004A4	CERAMIC OSCILLATOR	1	
X7702	VSX0353	CRYSTAL OSCILLATOR	1	
		MISCELLANEOUS		
	VMP4894	SUPPORT ANGLE	2	
	VMD2329	PHOTO TRANSISTOR HOLDER	2	
	VMD2328	REEL GUIDE	1	
	VMD2330	LED HOLDER	1	
	VSC3553	SHIELD COVER (MAIN)	1	FOR NICAM DECODER C.B.A.
	VSC3555	SHIELD COVER (BOTTOM)	1	FOR NICAM DECODER C.B.A.
	VMT0784	SPACER	1	FOR NICAM DECODER C.B.A.
	VMP4471	TV DEMODULATOR ANGLE	1	FOR TV DEMODU. C.B.A.
■	VEP06B97D	MAIN C.B.A.		[SUPPLIED FROM MBV]
				(RTL)
				NV-HD620EG
C301	ECUX1H101JCV	C.CAPACITOR CH 50V 100P	1	
C302	ECUX1H820JCV	C.CAPACITOR CH 50V 82P	1	
C305	ECUX1H102GCV	C.CAPACITOR CH 50V 1000P	1	[SUPPLIED FROM MBV]
C306	ECUX1H103ZFV	C.CAPACITOR CH 50V 0.01U	1	
C307	ECEA1EKA4R7	E.CAPACITOR 25V 4.7U	1	
C309	ECUX1H330JCV	C.CAPACITOR CH 50V 33P	1	
C310	ECUX1E223KBV	C.CAPACITOR CH 25V 0.023U	1	
C311	ECUM1E104KBN	C.CAPACITOR CH 25V 0.1U	1	
C312	ECUX1H680JCV	C.CAPACITOR CH 50V 68P	1	
C313	ECUX1H681GCV	C.CAPACITOR CH 50V 680P	1	[SUPPLIED FROM MBV]
C314	ECUM1H104ZFN	C.CAPACITOR CH 50V 0.1U	1	
C315	ECUX1H103ZFV	C.CAPACITOR CH 50V 0.01U	1	
C316	ECEA1HKA010	E.CAPACITOR 50V 1U	1	
C317	ECUX1C104KBV	C.CAPACITOR CH 16V 0.1U	1	
C318	ECUX1C104ZFV	C.CAPACITOR CH 16V 0.1U	1	
C319	ECUX1H222KBV	C.CAPACITOR CH 50V 2200P	1	
C320	ECUX1C333KBV	C.CAPACITOR CH 16V 0.033U	1	
C321	ECEA1HKA010	E.CAPACITOR 50V 1U	1	
C322	ECUX1H270JCV	C.CAPACITOR CH 50V 27P	1	
C323	ECUX1C104ZFV	C.CAPACITOR CH 16V 0.1U	1	

Ref. No.	Part No.	Part Name & Description	Pcs	Remarks
C324	ECEA0JKA101	E. CAPACITOR 6.3V 100U	1	
C325	ECUX1H103ZFV	C. CAPACITOR CH 50V 0.01U	1	
C327	ECEA0JKA101	E. CAPACITOR 6.3V 100U	1	
C328	ECUX1H080DCV	C. CAPACITOR CH 50V 8P	1	
C329	ECUX1H101JCV	C. CAPACITOR CH 50V 100P	1	
C330	ECUX1H330JCV	C. CAPACITOR CH 50V 33P	1	
C331	ECUX1H820JCV	C. CAPACITOR CH 50V 82P	1	
C332	ECUX1H681JCV	C. CAPACITOR CH 50V 680P	1	
C333	ECUX1H060DCV	C. CAPACITOR CH 50V 6P	1	
C334	ECUX1H100DCV	C. CAPACITOR CH 50V 10P	1	
C335	ECUX1H120JCV	C. CAPACITOR CH 50V 12P	1	
C336	ECUX1C104ZFV	C. CAPACITOR CH 16V 0.1U	1	
C337	ECEA1CKA100	E. CAPACITOR 16V 10U	1	
C338	ECUX1C104ZFV	C. CAPACITOR CH 16V 0.1U	1	
C339	ECUX1H470JCV	C. CAPACITOR CH 50V 47P	1	
C340	ECEA1CKA100	E. CAPACITOR 16V 10U	1	
C341	ECUX1E223KBV	C. CAPACITOR CH 25V 0.023U	1	
C342	ECEA1EKA4R7	E. CAPACITOR 25V 4.7U	1	
C343	ECEA1EKN4R7	E. CAPACITOR 25V 4.7U	1	
C344	ECUX1C104ZFV	C. CAPACITOR CH 16V 0.1U	1	
C345, 46	ECUX1H103ZFV	C. CAPACITOR CH 50V 0.01U	2	
C347	ECUM1H104ZFN	C. CAPACITOR CH 50V 0.1U	1	
C348	ECEA1CKA101	E. CAPACITOR 16V 100U	1	
C349	ECUX1C104ZFV	C. CAPACITOR CH 16V 0.1U	1	
C350	ECUX1H152KBV	C. CAPACITOR CH 50V 1500P	1	
C351	ECUX1H392KBV	C. CAPACITOR CH 50V 3900P	1	
C352	ECEA0JKA470	E. CAPACITOR 6.3V 47U	1	
C353	ECUX1H221JCV	C. CAPACITOR CH 50V 220P	1	
C354	ECUX1H470JCV	C. CAPACITOR CH 50V 47P	1	
C355	ECEA0JKA221	E. CAPACITOR 6.3V 220U	1	
C356	ECUX1H103ZFV	C. CAPACITOR CH 50V 0.01U	1	
C357	ECUX1H103KBV	C. CAPACITOR CH 50V 0.01U	1	
C358	ECUX1H472KBV	C. CAPACITOR CH 50V 4700P	1	
C361	ERJ6GEY0R00	M. RESISTOR CH 1/10W 0	1	
C362	ECUX1H103ZFV	C. CAPACITOR CH 50V 0.01U	1	
C363	ECUX1H270JCV	C. CAPACITOR CH 50V 27P	1	
C365, 66	ECUX1H101JCV	C. CAPACITOR CH 50V 100P	2	
C370	ECUX1C104ZFV	C. CAPACITOR CH 16V 0.1U	1	
C371	ECEA1HKA0R1	E. CAPACITOR 50V 0.1U	1	
C372, 73	ECUX1C104ZFV	C. CAPACITOR CH 16V 0.1U	2	
C374	ECUX1H103ZFV	C. CAPACITOR CH 50V 0.01U	1	
C375	ECEA0JKA470	E. CAPACITOR 6.3V 47U	1	
C378	ECUX1H103ZFV	C. CAPACITOR CH 50V 0.01U	1	
C379, 80	ECUX1H330JCV	C. CAPACITOR CH 50V 33P	2	
C381	ECUX1H820JCV	C. CAPACITOR CH 50V 82P	1	
C0701, 02	ECUX1H103ZFV	C. CAPACITOR CH 50V 0.01U	2	
C0704	ECUX1H331JCV	C. CAPACITOR CH 50V 330P	1	
C0706	ECEA1HKA0R1	E. CAPACITOR 50V 0.1U	1	
C0707, 08	ECUX1H103ZFV	C. CAPACITOR CH 50V 0.01U	2	
C0709	ECUX1H120JCV	C. CAPACITOR CH 50V 12P	1	
C0710	ECUX1H470JPV	C. CAPACITOR CH 50V 47P	1	
C0711	ECEA1CKA100	E. CAPACITOR 16V 10U	1	
C0712	ECUX1H103ZFV	C. CAPACITOR CH 50V 0.01U	1	
C0714	ECQB1H473JF	P. CAPACITOR 50V 0.047U	1	
C0715	ECUM1H103ZFN	C. CAPACITOR CH 50V 0.01U	1	
C0716	ECEA1CKA470	E. CAPACITOR 16V 47U	1	
C0717	ECUX1H270JPV	C. CAPACITOR CH 50V 27P	1	
C0718	ECEA1HKSR47	E. CAPACITOR 50V 0.47U	1	
C0719	ECUX1H120JCV	C. CAPACITOR CH 50V 12P	1	
C0720	ECUX1H103ZFV	C. CAPACITOR CH 50V 0.01U	1	
C0723	ECEA1HKA0R1	E. CAPACITOR 50V 0.1U	1	
C0726	ECUX1H103ZFV	C. CAPACITOR CH 50V 0.01U	1	
C0730	ECUX1H103ZFV	C. CAPACITOR CH 50V 0.01U	1	
C0732	ECUX1H103ZFV	C. CAPACITOR CH 50V 0.01U	1	
C801	ECEA1CKA100	E. CAPACITOR 16V 10U	1	
C802	ECUX1H103ZFV	C. CAPACITOR CH 50V 0.01U	1	
C803	ECEA0JKA470	E. CAPACITOR 6.3V 47U	1	
C804	ECUX1H103ZFV	C. CAPACITOR CH 50V 0.01U	1	
C805	ECUX1H050CCV	C. CAPACITOR CH 50V 5P	1	
C806	ECUX1C104ZFV	C. CAPACITOR CH 16V 0.1U	1	
C807	ECUX1H103ZFV	C. CAPACITOR CH 50V 0.01U	1	
C1001	ECEA1CGE101	E. CAPACITOR 16V 100U	1	
C1002	ECUM1H103ZFN	C. CAPACITOR CH 50V 0.01U	1	
C1003	ECEA1CGE470	E. CAPACITOR 16V 47U	1	
C1004	ECUM1H103ZFN	C. CAPACITOR CH 50V 0.01U	1	

Ref. No.	Part No.	Part Name & Description	Pcs	Remarks
C1005	ECEA0JKG220	E. CAPACITOR 6.3V 22U	1	
C1006	ECUM1H103ZFN	C. CAPACITOR CH 50V 0.01U	1	
C1007	ECEA0JKG101	E. CAPACITOR 6.3V 100U	1	
C1008	ECUM1H103ZFN	C. CAPACITOR CH 50V 0.01U	1	
C1009	ECEA1AKG220	E. CAPACITOR 10V 22U	1	[SUPPLIED FROM MBV]
C1010	ECEA0JKG101	E. CAPACITOR 6.3V 100U	1	
C1011	ECUM1H103ZFN	C. CAPACITOR CH 50V 0.01U	1	
C1012	ECEA0JKG101	E. CAPACITOR 6.3V 100U	1	
C1013	ECEA0JKG220	E. CAPACITOR 6.3V 22U	1	
C2001	ECUM1H104ZFN	C. CAPACITOR CH 50V 0.1U	1	
C2002, 03	ECUM1H102KBN	C. CAPACITOR CH 50V 1000P	2	
C2004	ECUM1H223KBN	C. CAPACITOR CH 50V 0.022U	1	
C2005	ECUM1H104ZFN	C. CAPACITOR CH 50V 0.1U	1	
C2006	ECUM1H392KBN	C. CAPACITOR CH 50V 3900P	1	
C2007	ECUM1H472KBN	C. CAPACITOR CH 50V 4700P	1	
C2008	ECQV1H683JM	P. CAPACITOR 50V 0.068U	1	
C2009	ECEA0JKA221	E. CAPACITOR 6.3V 220U	1	
C2010	ECUM1H471JCN	C. CAPACITOR CH 50V 470P	1	
C2011	ECEA0JKA221	E. CAPACITOR 6.3V 220U	1	
C2012	ECEA1CKA100	E. CAPACITOR 16V 10U	1	
C2013	ECUM1H222KBN	C. CAPACITOR CH 50V 2200P	1	
C2014	ECUM1H103ZFN	C. CAPACITOR CH 50V 0.01U	1	
C2015	ECEA0JKA470	E. CAPACITOR 6.3V 47U	1	
C2016, 17	ECEA1EKN3R3	E. CAPACITOR 25V 3.3U	2	
C2018	ECEA1EKA4R7	E. CAPACITOR 25V 4.7U	1	
C2019, 20	ECUM1H102KBN	C. CAPACITOR CH 50V 1000P	2	
C2021, 22	ECUM1C105ZFN	C. CAPACITOR CH 16V 1U	2	
C2023	ECUM1H222KBN	C. CAPACITOR CH 50V 2200P	1	
C2024, 25	ECEA1HKA2R2	E. CAPACITOR 50V 2.2U	2	
C2026	ECEA1HKNR22	E. CAPACITOR 50V 0.22U	1	
C2027	ECA1EM470	E. CAPACITOR 25V 47U	1	
C2028	ECEA1HKA010	E. CAPACITOR 50V 1U	1	
C2029	ECA1EM470	E. CAPACITOR 25V 47U	1	
C2030, 31	ECUM1H333KBN	C. CAPACITOR CH 50V 0.033U	2	
C2032	ECUM1H103ZFN	C. CAPACITOR CH 50V 0.01U	1	
C2033	ECA0JM221	E. CAPACITOR 6.3V 220U	1	
C2035	ECUM1H333KBN	C. CAPACITOR CH 50V 0.033U	1	
C2036	ECQV1H683JM	P. CAPACITOR 50V 0.068U	1	
C2037	ECUM1H104ZFN	C. CAPACITOR CH 50V 0.1U	1	
C2038-40	ECUM1H333KBN	C. CAPACITOR CH 50V 0.033U	3	
C2041, 42	ECUM1H680JCN	C. CAPACITOR CH 50V 68P	2	
C2043, 44	ECUM1C474ZFN	C. CAPACITOR CH 16V 0.47U	2	
C2045	ECUM1H103ZFN	C. CAPACITOR CH 50V 0.01U	1	
C2046	ECEA1HKA2R2	E. CAPACITOR 50V 2.2U	1	
C2047-49	ECEA1VKN4R7	E. CAPACITOR 35V 4.7U	3	
C2050	ECUM1H473ZFN	C. CAPACITOR CH 50V 0.047U	1	
C2051	ECEA0JKG101	E. CAPACITOR 6.3V 100U	1	
C2052	ECQV1H683JM	P. CAPACITOR 50V 0.068U	1	
C2053	ECEA1HKAR47	E. CAPACITOR 50V 0.47U	1	
C2054	ECUM1H101JCN	C. CAPACITOR CH 50V 100P	1	
C2055	ECEA0JKA470	E. CAPACITOR 6.3V 47U	1	
C2056	ECQV1H104JM	P. CAPACITOR 50V 0.1U	1	
C2057, 58	ECEA1HKG0R1	E. CAPACITOR 50V 0.1U	2	
C2059	ECEA1HKA0R1	E. CAPACITOR 50V 0.1U	1	
C2061	ECUM1H104ZFN	C. CAPACITOR CH 50V 0.1U	1	
C3001	ECUM1H620JCN	C. CAPACITOR CH 50V 62P	1	
C3002	ECUM1H181JCN	C. CAPACITOR CH 50V 180P	1	
C3003	ECUM1H220JCN	C. CAPACITOR CH 50V 22P	1	
C3004	ECUM1H103ZFN	C. CAPACITOR CH 50V 0.01U	1	
C3006	ECUM1H103ZFN	C. CAPACITOR CH 50V 0.01U	1	
C3007	ECEA0JKA221	E. CAPACITOR 6.3V 220U	1	
C3008	ECUM1H102KBN	C. CAPACITOR CH 50V 1000P	1	
C3009	ECUM1H103ZFN	C. CAPACITOR CH 50V 0.01U	1	
C3010	ECUM1C105ZFN	C. CAPACITOR CH 16V 1U	1	
C3017, 18	ECUM1H103ZFN	C. CAPACITOR CH 50V 0.01U	2	
C3019	ECUM1H620JCN	C. CAPACITOR CH 50V 62P	1	
C3021	ECUM1H104ZFN	C. CAPACITOR CH 50V 0.1U	1	
C3023	ECEA1CKA470	E. CAPACITOR 16V 47U	1	
C3024	ECUM1E333KBN	C. CAPACITOR CH 25V 0.033U	1	
C3027	ECEA0JKA470	E. CAPACITOR 6.3V 47U	1	
C3028	ECUM1H151JCN	C. CAPACITOR CH 50V 150P	1	
C3029	ECUM1H220JCN	C. CAPACITOR CH 50V 22P	1	
C3031	ECUM1H220JCN	C. CAPACITOR CH 50V 22P	1	
C3032	ECUM1H681JCN	C. CAPACITOR CH 50V 680P	1	
C3033	ECUM1H330JCN	C. CAPACITOR CH 50V 33P	1	

Ref. No.	Part No.	Part Name & Description	Pcs	Remarks
C3055	ECUM1H103ZFN	C. CAPACITOR CH 50V 0.01U	1	
C3057	ECUM1H180JCN	C. CAPACITOR CH 50V 18P	1	
C3061	ECUM1H104ZFN	C. CAPACITOR CH 50V 0.1U	1	
C3062	ECEA0JKA470	E. CAPACITOR 6.3V 47U	1	
C3064	ERJ6GMZ0R00	M. RESISTOR CH 1/10W 0	1	
C3065	ECUM1H104ZFN	C. CAPACITOR CH 50V 0.1U	1	
C3066	ECUM1H151JCN	C. CAPACITOR CH 50V 150P	1	
C4004	ECEA1CKA100	E. CAPACITOR 16V 10U	1	
C4005	ECCD2H181J	C. CAPACITOR 500V 180P	1	
C4006	ECEA1CKA330	E. CAPACITOR 16V 33U	1	
C4007	ECUM1H153KBN	C. CAPACITOR CH 50V 0.015U	1	
C4009	ECEA1CKA100	E. CAPACITOR 16V 10U	1	
C4010	ECUM1H104ZFN	C. CAPACITOR CH 50V 0.1U	1	
C4011	ECQP1362JZ	P. CAPACITOR 100V 3600P	1	[SUPPLIED FROM MBV]
C4017	ECUM1H102JCN	C. CAPACITOR CH 50V 1000P	1	
C4018-20	ECEA1HKA0R1	E. CAPACITOR 50V 0.1U	3	
C4021, 22	ECUM1H153KBN	C. CAPACITOR CH 50V 0.015U	2	
C4023	ECUM1C105ZFN	C. CAPACITOR CH 16V 1U	1	
C4024	ECUM1H272KBN	C. CAPACITOR CH 50V 2700P	1	
C4025, 26	ECEA1CKA220	E. CAPACITOR 16V 22U	2	
C4027	ECEA1HKS3R3	E. CAPACITOR 50V 3.3U	1	
C4028	ECEA1CKA470	E. CAPACITOR 16V 47U	1	
C4029, 30	ECUM1H102JCN	C. CAPACITOR CH 50V 1000P	2	
C4031	ECEA1AKA101	E. CAPACITOR 10V 100U	1	
C4032	ECUM1H822KBN	C. CAPACITOR CH 50V 8200P	1	
C4033, 34	ECUM1H471JCN	C. CAPACITOR CH 50V 470P	2	
C4038	ECUM1H103ZFN	C. CAPACITOR CH 50V 0.01U	1	
C4039	ECUM1H220JCN	C. CAPACITOR CH 50V 22P	1	
C4040	ECUM1H102JCN	C. CAPACITOR CH 50V 1000P	1	
C4042	ECUM1H222JCN	C. CAPACITOR CH 50V 2200P	1	
C4044	ECEA1HKA4R7	E. CAPACITOR 50V 4.7U	1	
C4501	ECUX1H681JCV	C. CAPACITOR CH 50V 680P	1	
C4502	ECUX1H561JCV	C. CAPACITOR CH 50V 560P	1	
C4503	ECUX1H102KBV	C. CAPACITOR CH 50V 1000P	1	
C4506	ECA1CAK100X	E. CAPACITOR 16V 10U	1	[SUPPLIED FROM MBV]
C4507	ECQB1H223JF	P. CAPACITOR 50V 0.022U	1	
C4508	ECA1HAK4R7X	E. CAPACITOR 50V 4.7U	1	[SUPPLIED FROM MBV]
C4509	ECA1CAK470X	E. CAPACITOR 16V 47U	1	[SUPPLIED FROM MBV]
C4510	ECQB1H103JF	P. CAPACITOR 50V 0.01U	1	
C4511	ECQB1H332JF	P. CAPACITOR 50V 3300P	1	
C4512	ECUX1H561JCV	C. CAPACITOR CH 50V 560P	1	
C4513	ECUM1H681JCN	C. CAPACITOR CH 50V 680P	1	
C4514	ECUM1H561JCN	C. CAPACITOR CH 50V 560P	1	
C4515	ECA1HAK4R7X	E. CAPACITOR 50V 4.7U	1	[SUPPLIED FROM MBV]
C4521	ECUM1H473KBN	C. CAPACITOR CH 50V 0.047U	1	
C4522	ECA1HAK4R7X	E. CAPACITOR 50V 4.7U	1	[SUPPLIED FROM MBV]
C4530	ECA0JAK470X	E. CAPACITOR 6.3V 47U	1	[SUPPLIED FROM MBV]
C4533	ECA1CAK470X	E. CAPACITOR 16V 47U	1	[SUPPLIED FROM MBV]
C4537	ECUM1H102JCN	C. CAPACITOR CH 50V 1000P	1	
C4538	ECA1HAKR47X	E. CAPACITOR 50V 0.47U	1	[SUPPLIED FROM MBV]
C4541	ECUM1H104ZFN	C. CAPACITOR CH 50V 0.1U	1	
C4551	ECQB1H223JF	P. CAPACITOR 50V 0.022U	1	
C4556	ECA1CAK100X	E. CAPACITOR 16V 10U	1	[SUPPLIED FROM MBV]
C4558	ECA1HAK4R7X	E. CAPACITOR 50V 4.7U	1	[SUPPLIED FROM MBV]
C4559	ECA1CAK470X	E. CAPACITOR 16V 47U	1	[SUPPLIED FROM MBV]
C4560	ECQB1H103JF	P. CAPACITOR 50V 0.01U	1	
C4561	ECQB1H332JF	P. CAPACITOR 50V 3300P	1	
C4562	ECUX1H561JCV	C. CAPACITOR CH 50V 560P	1	
C4565	ECA1HAK4R7X	E. CAPACITOR 50V 4.7U	1	[SUPPLIED FROM MBV]
C4569	ECUX1C104ZFV	C. CAPACITOR CH 16V 0.1U	1	
C4572	ECA1HAK4R7X	E. CAPACITOR 50V 4.7U	1	[SUPPLIED FROM MBV]
C4576	ECUM1H473KBN	C. CAPACITOR CH 50V 0.047U	1	
C4585, 86	ECA0JAK101X	E. CAPACITOR 6.3V 100U	2	[SUPPLIED FROM MBV]
C4587	ECUM1H103ZFN	C. CAPACITOR CH 50V 0.01U	1	
C4591	ECUM1H104ZFN	C. CAPACITOR CH 50V 0.1U	1	
C4592	ECUX1H102KBV	C. CAPACITOR CH 50V 1000P	1	
C4673	ECUX1C104ZFV	C. CAPACITOR CH 16V 0.1U	1	
C4674	ECUM1H104ZFN	C. CAPACITOR CH 50V 0.1U	1	
C4676	ECA1VAK470X	E. CAPACITOR 35V 47U	1	[SUPPLIED FROM MBV]
C4677	ECA1CAK470X	E. CAPACITOR 16V 47U	1	[SUPPLIED FROM MBV]
C6001	ECUM1H104ZFN	C. CAPACITOR CH 50V 0.1U	1	
C6002	ECUM1C224ZFN	C. CAPACITOR CH 16V 0.22U	1	
C6003	ECEA1HKA2R2	E. CAPACITOR 50V 2.2U	1	
C6004	ECUM1H103ZFN	C. CAPACITOR CH 50V 0.01U	1	
C6005	ECEA0JKA470	E. CAPACITOR 6.3V 47U	1	

Ref. No.	Part No.	Part Name & Description	Pcs	Remarks
C6006	ECUM1H104ZFN	C. CAPACITOR CH 50V 0.1U	1	
C6007	ECEA0JKA101	E. CAPACITOR 6.3V 100U	1	
C6008	ECUM1H270JCN	C. CAPACITOR CH 50V 27P	1	
C6009	ECUM1H150JCN	C. CAPACITOR CH 50V 15P	1	
C6010	ECUM1H104ZFN	C. CAPACITOR CH 50V 0.1U	1	
C6013, 14	ECUM1H271JCN	C. CAPACITOR CH 50V 270P	2	
C6015	ECEA1CKA100	E. CAPACITOR 16V 10U	1	
C6016	ECUM1H104ZFN	C. CAPACITOR CH 50V 0.1U	1	
C6018	ECUM1H104ZFN	C. CAPACITOR CH 50V 0.1U	1	
C7301, 02	ECUX1H103ZFV	C. CAPACITOR CH 50V 0.01U	2	
C7303	ECEA1CKA470	E. CAPACITOR 16V 47U	1	
C7304	ECUX1H103ZFV	C. CAPACITOR CH 50V 0.01U	1	
C7305	ECEA1CKA220	E. CAPACITOR 16V 22U	1	
C7306	ECUX1H391JCV	C. CAPACITOR CH 50V 390P	1	
C7309-12	ECUX1H103ZFV	C. CAPACITOR CH 50V 0.01U	4	
C7313	ECEA0JKA220	E. CAPACITOR 6.3V 22U	1	
C7314	ECUX1H103ZFV	C. CAPACITOR CH 50V 0.01U	1	
C7315	ECEA1EKA4R7	E. CAPACITOR 25V 4.7U	1	
C7317, 18	ECUX1H040CCV	C. CAPACITOR CH 50V 4P	2	
C7320	ECEA0JKA101	E. CAPACITOR 6.3V 100U	1	
C7321	ECUX1H103ZFV	C. CAPACITOR CH 50V 0.01U	1	
C7322	ECEA1EKA4R7	E. CAPACITOR 25V 4.7U	1	
C7323, 24	ECUX1H391JCV	C. CAPACITOR CH 50V 390P	2	
C7325, 26	ECEA1CKA100	E. CAPACITOR 16V 10U	2	
C7327	ECUX1C104ZFV	C. CAPACITOR CH 16V 0.1U	1	
C7328	ECEA1CKA470	E. CAPACITOR 16V 47U	1	
C7329, 30	ECUX1H471JCV	C. CAPACITOR CH 50V 470P	2	
C7331	ECEA1CKA100	E. CAPACITOR 16V 10U	1	
C7332, 33	ECUX1C104ZFV	C. CAPACITOR CH 16V 0.1U	2	
C7334	ECEA0JKA101	E. CAPACITOR 6.3V 100U	1	
C7335	ECUX1C104ZFV	C. CAPACITOR CH 16V 0.1U	1	
C7338	ECUM1H471JCN	C. CAPACITOR CH 50V 470P	1	
C7339	ECUM1H182KBM	C. CAPACITOR CH 50V 1800P	1	
C7340	ECUM1H270JCN	C. CAPACITOR CH 50V 27P	1	
C7341	ECEA1CKA100	E. CAPACITOR 16V 10U	1	
C7342	ECUM1H561JCN	C. CAPACITOR CH 50V 560P	1	
C7343	ECEA1HKA010	E. CAPACITOR 50V 1U	1	
C7344	ECUM1H471JCN	C. CAPACITOR CH 50V 470P	1	
C7345	ECUM1H182KBM	C. CAPACITOR CH 50V 1800P	1	
C7346	ECUM1H270JCN	C. CAPACITOR CH 50V 27P	1	
C7347	ECEA1CKA100	E. CAPACITOR 16V 10U	1	
C7348	ECUM1H561JCN	C. CAPACITOR CH 50V 560P	1	
C7350	ECEA1HKA010	E. CAPACITOR 50V 1U	1	
C7351	ECUM1H471JCN	C. CAPACITOR CH 50V 470P	1	
C7352	ECUM1H182KBM	C. CAPACITOR CH 50V 1800P	1	
C7353	ECUM1H270JCN	C. CAPACITOR CH 50V 27P	1	
C7354	ECEA1CKA100	E. CAPACITOR 16V 10U	1	
C7355	ECUM1H561JCN	C. CAPACITOR CH 50V 560P	1	
C7357	ECUX1C104ZFV	C. CAPACITOR CH 16V 0.1U	1	
C7358	ECEA1HKA3R3	E. CAPACITOR 50V 3.3U	1	
C7359	ECUX1C104ZFV	C. CAPACITOR CH 16V 0.1U	1	
C7365, 66	ECEA1HKA010	E. CAPACITOR 50V 1U	2	
C7369	ECEA0JKA470	E. CAPACITOR 6.3V 47U	1	
C7370	ECUX1C104ZFV	C. CAPACITOR CH 16V 0.1U	1	
C7371, 72	ECUX1H103ZFV	C. CAPACITOR CH 50V 0.01U	2	
C7374, 75	ECUX1H150JCV	C. CAPACITOR CH 50V 15P	2	
C7601	ECUM1H103ZFN	C. CAPACITOR CH 50V 0.01U	1	
C7604	ECEA0JKA101	E. CAPACITOR 6.3V 100U	1	
C7605	ECUM1H104ZFN	C. CAPACITOR CH 50V 0.1U	1	
C7606	ECEA1CKA101	E. CAPACITOR 16V 100U	1	
C7608	ERJ6GMZ0R00	M. RESISTOR CH 1/10W 0	1	
C7609	ECEA0JKA101	E. CAPACITOR 6.3V 100U	1	
C7610	ECUM1H103ZFN	C. CAPACITOR CH 50V 0.01U	1	
C7612	ECEA0JKA101	E. CAPACITOR 6.3V 100U	1	
C7614	ECEA1HKA100	E. CAPACITOR 50V 10U	1	
C7615	ECEA1HKA010	E. CAPACITOR 50V 1U	1	
C7616	ECUM1E104KBN	C. CAPACITOR CH 25V 0.1U	1	
C7617	ECEA1AKS221	E. CAPACITOR 10V 220U	1	
C7701	ECUM1H150JCN	C. CAPACITOR CH 50V 15P	1	
C7702	ECUM1H080DCN	C. CAPACITOR CH 50V 8P	1	
C7706	ECUM1H103ZFN	C. CAPACITOR CH 50V 0.01U	1	
C7708-10	ECUM1H104ZFN	C. CAPACITOR CH 50V 0.1U	3	
C7712	ECEA0JKA470	E. CAPACITOR 6.3V 47U	1	
C7713	ECEA1EKA4R7	E. CAPACITOR 25V 4.7U	1	
C7714	ECEA0JKA101	E. CAPACITOR 6.3V 100U	1	

Ref. No.	Part No.	Part Name & Description	Pcs	Remarks
C7715	ECEA1CKA100	E. CAPACITOR 16V 10U	1	
C7716	ECUM1H120JCN	C. CAPACITOR CH 50V 12P	1	
C7718	ECUX1H561JCN	C. CAPACITOR CH 50V 560P	1	
C7721	ECUM1H103ZFN	C. CAPACITOR CH 50V 0.01U	1	
C7722	ECUM1H270JCN	C. CAPACITOR CH 50V 27P	1	
C7723	ECUM1H104ZFN	C. CAPACITOR CH 50V 0.1U	1	
C7724	ECEA0JKA470	E. CAPACITOR 6.3V 47U	1	
C7726	ECEA0JKA470	E. CAPACITOR 6.3V 47U	1	
C7729	ECUM1H104ZFN	C. CAPACITOR CH 50V 0.1U	1	
C7730	ECUM1H820JCN	C. CAPACITOR CH 50V 82P	1	
C7731	ECUM1H104ZFN	C. CAPACITOR CH 50V 0.1U	1	
C7732	ECUM1H102JCN	C. CAPACITOR CH 50V 1000P	1	
C7734	ECUM1H104ZFN	C. CAPACITOR CH 50V 0.1U	1	
C7736	ECUM1H104ZFN	C. CAPACITOR CH 50V 0.1U	1	
C7737	ECEA0JKA470	E. CAPACITOR 6.3V 47U	1	
C7738, 39	ECUM1H104ZFN	C. CAPACITOR CH 50V 0.1U	2	
C7743	ECUM1H104ZFN	C. CAPACITOR CH 50V 0.1U	1	
C7747	ECUM1H104ZFN	C. CAPACITOR CH 50V 0.1U	1	
C7752	ECEA1HKA2R2	E. CAPACITOR 50V 2.2U	1	
C7753, 54	ECUM1H221JCN	C. CAPACITOR CH 50V 220P	2	
C7755-57	ECUM1H104ZFN	C. CAPACITOR CH 50V 0.1U	3	
C7759, 60	ECUM1H101JCN	C. CAPACITOR CH 50V 100P	2	
D302, 03	1SS355	DIODE	2	
D313, 14	1SS355	DIODE	2	
D318	1SS355	DIODE	1	
D319	MA151K	DIODE	1	
D320	MA151WK	DIODE	1	
D321	1SS355	DIODE	1	
D802-04	1SS355	DIODE	3	
D1001	MA4051-L	DIODE	1	
D1003	MA4120-M	DIODE	1	
D1004	MA4051-L	DIODE	1	
D1005	1SS355	DIODE	1	
D1007, 08	1SS355	DIODE	2	
D1009	1SS254	DIODE	1	
D2001	MA153	DIODE	1	
D2002	MA151K	DIODE	1	
D2003-05	1SS355	DIODE	3	
D2006, 07	MA700	DIODE	2	
D2008, 09	MA185	DIODE	2	
D2010-13	1SS355	DIODE	4	
D3001, 02	1SS254	DIODE	2	
D3005	MA723-VT	DIODE	1	
D4003-05	1SS254	DIODE	3	
D4007	ERDS2TJ102	C. RESISTOR 1/4W 1K	1	
D4504	1SS254	DIODE	1	
D6001	LN59LT. VT	LED	1	
D6002	MA4075-L	DIODE	1	
D6003	MA151K	DIODE	1	
D7301	MA3082-L	DIODE	1	
D7302	MA151K	DIODE	1	
D7303	MA151WK	DIODE	1	
D7304	MA717	DIODE	1	
D7306	MA151WK	DIODE	1	
D7308	MA723-VT	DIODE	1	
D7601	MA4300-M	DIODE	1	
D7704	MA700A	DIODE	1	
D7705	1SS254	DIODE	1	
D7707	1SS254	DIODE	1	
FL7301, 02	VLF0633	FILTER	2	
IC301	TDA9725V2	IC	1	[SUPPLIED FROM MBV]
IC302	TL8850AF	IC	1	
IC0701	LA7576	IC	1	
IC1001	HA17431PA	IC	1	
IC2001	BA6887-V3	IC	1	
IC2002	BA6871BS	IC	1	
IC2003	AN3814K	IC	1	
IC4001	BA7795FS	IC	1	
IC4501	BH7778AK	IC	1	
IC6001	MN675536VR9Y	IC	1	[SUPPLIED FROM MBV]
IC6002, 03	ON1387	PHOTO INTERRUPTER	2	
IC7301	MSP3410B-F7	IC	1	[SUPPLIED FROM MBV]

Ref. No.	Part No.	Part Name & Description	Pcs	Remarks
IC7302	PST7043	IC	1	
IC7303	M5238FP	IC	1	
IC7304	HA17431PA	IC	1	
IC7305	MN155402VZDB	IC	1	
IC7306	PST7043	IC	1	
IC7701	M27C1001BAAA	IC	1	[SUPPLIED FROM MBV]
IC7702	MC74HCT573AW	IC	1	[SUPPLIED FROM MBV]
IC7703	NJM2535M	IC	1	[SUPPLIED FROM MBV]
IC7704	ST24W16FB6	IC	1	[SUPPLIED FROM MBV]
IC7706	SABC513AL16P	IC	1	[SUPPLIED FROM MBV]
IC7708	SAA5281ZPM3	IC	1	
IC7712	MC74HCT74AD	IC	1	[SUPPLIED FROM MBV]
K309	ERJ6GEY0R00	M. RESISTOR CH 1/10W 0	1	
K310	ERJ3GEY0R00	M. RESISTOR CH 1/16W 0	1	
K319	ERJ3GEY0R00	M. RESISTOR CH 1/16W 0	1	
K0702	ERJ3GEY0R00	M. RESISTOR CH 1/16W 0	1	
K0704, 05	ERJ3GEY0R00	M. RESISTOR CH 1/16W 0	2	
K1001	ERJ6GMZ0R00	M. RESISTOR CH 1/10W 0	1	
K3001	ERJ6GMZ0R00	M. RESISTOR CH 1/10W 0	1	
K3005	ERJ6GMZ0R00	M. RESISTOR CH 1/10W 0	1	
K3014, 15	ERJ6GMZ0R00	M. RESISTOR CH 1/10W 0	2	
K4002	ERJ6GMZ0R00	M. RESISTOR CH 1/10W 0	1	
K4004	ERJ6GMZ0R00	M. RESISTOR CH 1/10W 0	1	
K4502-06	ERJ3GEY0R00	M. RESISTOR CH 1/16W 0	5	
K6002	ERJ6GMZ0R00	M. RESISTOR CH 1/10W 0	1	
K6006, 07	ERJ6GMZ0R00	M. RESISTOR CH 1/10W 0	2	
K7304-07	ERJ3GEY0R00	M. RESISTOR CH 1/16W 0	4	
K7314	ERJ3GEY0R00	M. RESISTOR CH 1/16W 0	1	
K7317	ERJ3GEY0R00	M. RESISTOR CH 1/16W 0	1	
K7619	ERJ6GMZ0R00	M. RESISTOR CH 1/10W 0	1	
K7621	ERJ6GMZ0R00	M. RESISTOR CH 1/10W 0	1	
K7624	ERJ6GMZ0R00	M. RESISTOR CH 1/10W 0	1	
K7625	ERJ6GEY0R00	M. RESISTOR CH 1/10W 0	1	
K7709	ERJ6GMZ0R00	M. RESISTOR CH 1/10W 0	1	
K7712	ERJ6GMZ0R00	M. RESISTOR CH 1/10W 0	1	
K7714	ERJ6GMZ0R00	M. RESISTOR CH 1/10W 0	1	
L301	VLQ0599J151	COIL 150UH	1	
L302, 03	VLQ0599J100	COIL 10UH	2	
L304	VLQ0599J390	COIL 39UH	1	
L305	VLQ0599J470	COIL 47UH	1	
L306	VLQ0599J101	COIL 100UH	1	
L307	VLQ0599J270	COIL 27UH	1	
L308	VLQ0599J100	COIL 10UH	1	
L309	VLQ0599J470	COIL 47UH	1	
L311, 12	VLQ0599J680	COIL 68UH	2	
L313, 14	VLQ0599J390	COIL 39UH	2	
L315	VLQ0599J101	COIL 100UH	1	
L0701	VLQ0163JR18	COIL 0.18UH	1	[SUPPLIED FROM MBV]
L0705	VLQ0163J5R6	COIL 5.6UH	1	
L0706	VLQEL05S150K	COIL 15UH	1	
L801	VLQ0599J101	COIL 100UH	1	
L2001	VLP0083	COIL	1	
L3001	VLQ0599J820	COIL 82UH	1	
L3002	VLQ0599J151	COIL 150UH	1	
L3003	VLQ0599J6R8	COIL 6.8UH	1	
L3004	VLQ0599J120	COIL 12UH	1	
L3006	VLQ0599J101	COIL 100UH	1	
L3008	VLQ0599J270	COIL 27UH	1	
L3009	VLQ0599J680	COIL 68UH	1	
L3012	VLQ0599J680	COIL 68UH	1	
L4002	ELESN471KA	INDUCTOR 470UH	1	
L4003	VLQ0599J680	COIL 68UH	1	
L4005, 06	ERJ6GMZ0R00	M. RESISTOR CH 1/10W 0	2	
L4007	VLQ0123	COIL	1	
L6001	VLQ0599J101	COIL 100UH	1	
L6002	VLP0083	COIL	1	
L6003, 04	VLQ0599J680	COIL 68UH	2	
L7301	ELEXH100JBV	INDUCTOR 10UH	1	
L7302	ERJ6GEY0R00	M. RESISTOR CH 1/10W 0	1	
L7603, 04	VLQ0599J680	COIL 68UH	2	
L7606	VLQ0599J180	COIL 18UH	1	
L7607, 08	VLQ0599J330	COIL 33UH	2	
L7702	VLQ0599J3R3	COIL 3.3UH	1	

Ref.No.	Part No.	Part Name & Description	Pcs	Remarks
L7703	VLQ0599J270	COIL 27UH	1	
L7704	VLQ0599J100	COIL 10UH	1	
L7705	VLQ0599J101	COIL 100UH	1	
L7707	VLQ0599J120	COIL 12UH	1	
LB303-06	VLP0145	COIL	4	
LB307-11	ERJ6GEY0R00	M.RESISTOR CH 1/10W 0	5	
LB312	VLP0145	COIL	1	
LB1001	VLP0125	COIL	1	
LB3001	VLP0083	COIL	1	
P2001	VJS3640A002	CONNECTOR (FEMALE) 2P	1	
P2002	VJS3537A015G	CONNECTOR (FEMALE) 15P	1	
P2003	VJP3483	CONNECTOR (MALE)	1	
P2005	VJS3537A009G	CONNECTOR (FEMALE) 9P	1	
P3002	VJS3537A020G	CONNECTOR (FEMALE) 20P	1	
P4002	VJS3675E006G	CONNECTOR (FEMALE) 6P	1	
P4003	VJP1230T	CONNECTOR (MALE) 3P	1	
P6001	VJS3639A004	CONNECTOR (FEMALE) 4P	1	
PK301	VJR0776B010W	CONNECTOR (MALE) 10P	1	[SUPPLIED FROM MBV]
PK302	VJR0776B011W	CONNECTOR (MALE) 11P	1	[SUPPLIED FROM MBV]
PK303	VJR0776B012W	CONNECTOR (MALE) 12P	1	[SUPPLIED FROM MBV]
PK304	VJR0776B003W	CONNECTOR (MALE) 3P	1	
PK0701	VJR0816E010W	CONNECTOR (MALE) 10P	1	
PK4501	VJR0777B008W	CONNECTOR (MALE) 8P	1	
PK4502, 03	VJR0777B010W	CONNECTOR (MALE) 10P	2	
PK7301	VJR0777B009W	CONNECTOR (MALE) 9P	1	
PK7302	VJR0777B008W	CONNECTOR (MALE) 8P	1	
PP0701	VJP3589A004B	CONNECTOR (MALE) 4P	1	
PP3002	VJP3042G013W	CONNECTOR (MALE) 13P	1	
PP3003	VJP3042G005W	CONNECTOR (MALE) 5P	1	
PP3004	VJP3042G008W	CONNECTOR (MALE) 8P	1	
PP3005	VJP3042G010W	CONNECTOR (MALE) 10P	1	
PS3001	VJS3673F005G	CONNECTOR (FEMALE) 5P	1	[SUPPLIED FROM MBV]
PS3006	VJS3631A011A	CONNECTOR (FEMALE) 11P	1	
PS6002	VJS3673B025G	CONNECTOR (FEMALE) 25P	1	
Q301, 02	MSD601	TRANSISTOR	2	
Q305	MSD601	TRANSISTOR	1	
Q306	MSB709	TRANSISTOR	1	
Q307	MSB709-R	TRANSISTOR	1	
Q308	MSB709	TRANSISTOR	1	
Q309	MSC2295	TRANSISTOR	1	
Q0701	MSD601-S	TRANSISTOR	1	
Q0702	MSB709-R	TRANSISTOR	1	
Q801	MSB709	TRANSISTOR	1	
Q803	MSC2295	TRANSISTOR	1	
Q804	MSB709	TRANSISTOR	1	
Q805	MSD601	TRANSISTOR	1	
Q1001	MSD601	TRANSISTOR	1	
Q1002-04	2SD1996-S	TRANSISTOR	3	
Q1005	2SD602A	TRANSISTOR	1	
Q1007	2SD2544OPQA	TRANSISTOR	1	
Q3001	MSC2295	TRANSISTOR	1	
Q3002	MSB709	TRANSISTOR	1	
Q3003, 04	MSD601	TRANSISTOR	2	
Q3005	MSC2295	TRANSISTOR	1	
Q3006	MSB709	TRANSISTOR	1	
Q3007	MSC2295	TRANSISTOR	1	
Q3010	MSB709-R	TRANSISTOR	1	
Q3023	MSC2295	TRANSISTOR	1	
Q3024	MSD601	TRANSISTOR	1	
Q3025	MSC2295	TRANSISTOR	1	
Q4005	2SB1320A-R	TRANSISTOR	1	
Q4006	2SD602A-R	TRANSISTOR	1	
Q4007-09	MSD601-R	TRANSISTOR	3	
Q4501	2SD1468	TRANSISTOR	1	
Q4551	2SA1515	TRANSISTOR	1	
Q6001	MSB709	TRANSISTOR	1	
Q6002, 03	PN205LT-NCVT	PHOTO TRANSISTOR	2	
Q7301, 02	2SD1996	TRANSISTOR	2	
Q7304	2SC2404	TRANSISTOR	1	

Ref.No.	Part No.	Part Name & Description	Pcs	Remarks
Q7305	MSD601-S	TRANSISTOR	1	
Q7308-10	2SB709A	TRANSISTOR	3	
Q7311-13	MSD1328-S	TRANSISTOR	3	
Q7601	XN4601	TRANSISTOR-TRANSISTOR	1	
Q7603	2SB710A	TRANSISTOR	1	
Q7701-03	MSB709	TRANSISTOR	3	
Q7704, 05	MSD601	TRANSISTOR	2	
Q7706	MSB709	TRANSISTOR	1	
Q7708-12	MSD601	TRANSISTOR	5	
QR302	MUN2113	TRANSISTOR-RESISTOR	1	
QR305	MUN2213	TRANSISTOR-RESISTOR	1	
QR317	MUN2213	TRANSISTOR-RESISTOR	1	
QR801	MUN2213	TRANSISTOR-RESISTOR	1	
QR1001, 02	MUN2113	TRANSISTOR-RESISTOR	2	
QR1003	MUN2213	TRANSISTOR-RESISTOR	1	
QR3001	MUN2111	TRANSISTOR-RESISTOR	1	
QR3002, 03	DTC363EK	TRANSISTOR-RESISTOR	2	
QR3027	MUN2212	TRANSISTOR-RESISTOR	1	
QR4001	MUN2212	TRANSISTOR-RESISTOR	1	
QR6001	XN1211	TRANSISTOR-RESISTOR	1	
QR6002	UN2114	TRANSISTOR-RESISTOR	1	
QR6004	XN1213	TRANSISTOR-RESISTOR	1	
QR7301	MUN2213	TRANSISTOR-RESISTOR	1	
QR7302	MUN2112	TRANSISTOR-RESISTOR	1	
QR7601	MUN2213	TRANSISTOR-RESISTOR	1	
QR7602	MUN2212	TRANSISTOR-RESISTOR	1	
QR7603	MUN2213	TRANSISTOR-RESISTOR	1	
QR7703	MUN2113	TRANSISTOR-RESISTOR	1	
R303	ERJ3GEYJ182	M.RESISTOR CH 1/16W 1.8K	1	
R304	ERJ3GEYJ225	M.RESISTOR CH 1/16W 2.2M	1	
R305	ERJ3GEYG682	M.RESISTOR CH 1/16W 6.8K	1	
R307	ERJ3GEYJ271	M.RESISTOR CH 1/16W 270	1	
R308	ERJ3GEYG102	M.RESISTOR CH 1/16W 1K	1	
R309	ERJ3GEYJ271	M.RESISTOR CH 1/16W 270	1	
R310, 11	ERJ3GEYG152	M.RESISTOR CH 1/16W 1.5K	2	
R312	ERJ3GEYG472	M.RESISTOR CH 1/16W 4.7K	1	
R313	ERJ3GEYJ473	M.RESISTOR CH 1/16W 47K	1	
R314	ERJ3GEYJ683	M.RESISTOR CH 1/16W 68K	1	
R315	ERJ3GEYJ223	M.RESISTOR CH 1/16W 22K	1	
R316	ERJ3GEYJ103	M.RESISTOR CH 1/16W 10K	1	
R317	ERJ3GEYG472	M.RESISTOR CH 1/16W 4.7K	1	
R319	ERJ3GEYJ183	M.RESISTOR CH 1/16W 18K	1	
R320	ERJ3GEYJ821	M.RESISTOR CH 1/16W 820	1	
R321	ERJ3GEYJ120	M.RESISTOR CH 1/16W 12	1	
R322	ERJ3GEYJ223	M.RESISTOR CH 1/16W 22K	1	
R323	ERJ3GEYG102	M.RESISTOR CH 1/16W 1K	1	
R324, 25	ERJ3GEYJ103	M.RESISTOR CH 1/16W 10K	2	
R326	ERJ3GEYJ242	M.RESISTOR CH 1/16W 2.4K	1	
R327	ERJ3GEYG102	M.RESISTOR CH 1/16W 1K	1	
R328	ERJ3GEYJ272	M.RESISTOR CH 1/16W 2.7K	1	
R329	ERJ3GEYJ182	M.RESISTOR CH 1/16W 1.8K	1	
R330	ERJ3GEYJ122	M.RESISTOR CH 1/16W 1.2K	1	
R332	ERJ3GEYJ390	M.RESISTOR CH 1/16W 39	1	
R333	ERJ3GEYJ561	M.RESISTOR CH 1/16W 560	1	
R335	ERJ3GEYJ122	M.RESISTOR CH 1/16W 1.2K	1	
R337	ERJ3GEYJ561	M.RESISTOR CH 1/16W 560	1	
R338	ERJ3GEYG471	M.RESISTOR CH 1/16W 470	1	
R339	ERJ3GEYJ333	M.RESISTOR CH 1/16W 33K	1	
R340	ERJ3GEYJ182	M.RESISTOR CH 1/16W 1.8K	1	
R341	ERJ3GEYJ101	M.RESISTOR CH 1/16W 100	1	
R344	ERJ3GEYJ473	M.RESISTOR CH 1/16W 47K	1	
R347	ERJ3GEYJ473	M.RESISTOR CH 1/16W 47K	1	
R353	ERJ3GEYG102	M.RESISTOR CH 1/16W 1K	1	
R354	ERJ3GEYJ681	M.RESISTOR CH 1/16W 680	1	
R355	ERJ3GEYJ331	M.RESISTOR CH 1/16W 330	1	
R356, 57	ERJ3GEYJ821	M.RESISTOR CH 1/16W 820	2	
R359	ERJ3GEYG102	M.RESISTOR CH 1/16W 1K	1	
R360	ERJ3GEYJ221	M.RESISTOR CH 1/16W 220	1	
R369	ERJ3GEYJ393	M.RESISTOR CH 1/16W 39K	1	
R374	ERJ3GEYG102	M.RESISTOR CH 1/16W 1K	1	
R375	ERJ3GEYJ101	M.RESISTOR CH 1/16W 100	1	
R376	ERJ3GEYJ470	M.RESISTOR CH 1/16W 47	1	
R0704	ERJ3GEYJ222	M.RESISTOR CH 1/16W 2.2K	1	

Ref. No.	Part No.	Part Name & Description	Pcs	Remarks
R0705	ERJ3GEYJ562	M. RESISTOR CH 1/16W 5.6K	1	
R0706, 07	ERJ3GEYJ272	M. RESISTOR CH 1/16W 2.7K	2	
R0708	ERJ3GEYG152	M. RESISTOR CH 1/16W 1.5K	1	
R0709	ERJ3GEYJ105	M. RESISTOR CH 1/16W 1M	1	
R0710	ERJ6GEYG154	M. RESISTOR CH 1/10W 150K	1	
R0713	ERJ3GEYJ391	M. RESISTOR CH 1/16W 390	1	
R0714	ERJ3GEYJ470	M. RESISTOR CH 1/16W 47	1	
R0715	ERJ3GEYJ183	M. RESISTOR CH 1/16W 18K	1	
R0716	VRE0040E151	M. RESISTOR CH 1/10W 150	1	
R0717	ERJ3GEYJ330	M. RESISTOR CH 1/16W 33	1	
R0718	ERJ3GEYG102	M. RESISTOR CH 1/16W 1K	1	
R0719	ERJ6GEYF822	M. RESISTOR CH 1/10W 8.2K	1	
R0720	ERJ3GEYG102	M. RESISTOR CH 1/16W 1K	1	
R0722	ERJ3GEYJ101	M. RESISTOR CH 1/16W 100	1	
R0728	ERJ3GEYG471	M. RESISTOR CH 1/16W 470	1	
R0729	ERJ3GEYG102	M. RESISTOR CH 1/16W 1K	1	
R0732	ERJ3GEYG471	M. RESISTOR CH 1/16W 470	1	
R0783	ERJ3GEYJ393	M. RESISTOR CH 1/16W 39K	1	
R801	ERJ3GEYJ222	M. RESISTOR CH 1/16W 2.2K	1	
R802	ERJ3GEYG681	M. RESISTOR CH 1/16W 680	1	
R803	ERJ3GEYG182	M. RESISTOR CH 1/16W 1.8K	1	
R810	ERJ3GEYJ103	M. RESISTOR CH 1/16W 10K	1	
R811	ERJ3GEYJ273	M. RESISTOR CH 1/16W 27K	1	
R812	ERJ3GEYJ563	M. RESISTOR CH 1/16W 56K	1	
R813	ERJ3GEYG561	M. RESISTOR CH 1/16W 560	1	
R814	ERJ3GEYG103	M. RESISTOR CH 1/16W 10K	1	
R815	ERJ3GEYG681	M. RESISTOR CH 1/16W 680	1	
R816	ERJ3GEYG181	M. RESISTOR CH 1/16W 180	1	
R817	ERJ3GEYG101	M. RESISTOR CH 1/16W 100	1	[SUPPLIED FROM MBV]
R818	ERJ3GEYG242	M. RESISTOR CH 1/16W 2.4K	1	
R1001	ERJ6GMYG333	M. RESISTOR CH 1/10W 33K	1	
R1002	ERDS2TJ102	C. RESISTOR 1/4W 1K	1	
R1003	ERJ6GMYG272	M. RESISTOR CH 1/10W 2.7K	1	
R1004	ERJ6GMYJ363	M. RESISTOR CH 1/10W 36K	1	
R1005	ERJ6GMYG272	M. RESISTOR CH 1/10W 2.7K	1	
R1006	ERDS2TJ122	C. RESISTOR 1/4W 1.2K	1	
R1007	ERJ6GMYG102	M. RESISTOR CH 1/10W 1K	1	
R1008	ERJ6GMYG333	M. RESISTOR CH 1/10W 33K	1	
R1009, 10	ERJ6GMYG562	M. RESISTOR CH 1/10W 5.6K	2	
R1011	ERDS1TJ272	C. RESISTOR 1/2W 2.7K	1	
R2001	ERJ6GMYG913	M. RESISTOR CH 1/10W 91K	1	
R2002-04	ERJ6GMYG102	M. RESISTOR CH 1/10W 1K	3	
R2005	ERX1SJ1R8	M. RESISTOR 1W 1.8	1	
R2006	ERJ6GMYG512	M. RESISTOR CH 1/10W 5.1K	1	
R2007	ERJ6GMYG222	M. RESISTOR CH 1/10W 2.2K	1	
R2009, 10	ERJ6GMYG103	M. RESISTOR CH 1/10W 10K	2	
R2011	ERJ6GMYG102	M. RESISTOR CH 1/10W 1K	1	
R2012	ERJ6GMYJ221	M. RESISTOR CH 1/10W 220	1	
R2013	ERJ6GMYG272	M. RESISTOR CH 1/10W 2.7K	1	
R2014, 15	ERJ6GMYJ223	M. RESISTOR CH 1/10W 22K	2	
R2016	ERJ6GMYG222	M. RESISTOR CH 1/10W 2.2K	1	
R2017, 18	ERJ6GMYJ223	M. RESISTOR CH 1/10W 22K	2	
R2019	ERJ6GMYG103	M. RESISTOR CH 1/10W 10K	1	
R2020	ERJ6GMYG471	M. RESISTOR CH 1/10W 470	1	
R2021	ERJ6GMYG103	M. RESISTOR CH 1/10W 10K	1	
R2022	ERJ6GMYG222	M. RESISTOR CH 1/10W 2.2K	1	
R2023	EROS2CKG8200	M. RESISTOR 1/4W 820	1	
R2024	EROS2CKG6800	M. RESISTOR 1/4W 680	1	
R2025	ERJ6GMYG102	M. RESISTOR CH 1/10W 1K	1	
R2026, 27	ERDS2TJ560	C. RESISTOR 1/4W 56	2	
R2028	ERDS1TJ561	C. RESISTOR 1/2W 560	1	
R2029	ERJ6GMYG222	M. RESISTOR CH 1/10W 2.2K	1	
R2030	ERJ6GMYG432	M. RESISTOR CH 1/10W 4.3K	1	
R2031	ERJ6GMYG473	M. RESISTOR CH 1/10W 47K	1	
R2032	ERJ6GMYG103	M. RESISTOR CH 1/10W 10K	1	
R2033	ERJ6GMYJ684	M. RESISTOR CH 1/10W 680K	1	
R2034	ERJ6GMYG133	M. RESISTOR CH 1/10W 13K	1	
R2035	ERJ6GMYJ105	M. RESISTOR CH 1/10W 1M	1	
R2036, 37	ERJ6GMYG472	M. RESISTOR CH 1/10W 4.7K	2	
R2038	ERJ6GMYG102	M. RESISTOR CH 1/10W 1K	1	
R2039, 40	ERJ6GMYJ105	M. RESISTOR CH 1/10W 1M	2	
R2041, 42	ERJ6GMYG392	M. RESISTOR CH 1/10W 3.9K	2	
R2043	ERDS2TJ560	C. RESISTOR 1/4W 56	1	
R2044	ERX12SJR47	M. RESISTOR 1/2W 0.47	1	
R2045	ERDS2FJ1R5	C. RESISTOR 1/4W 1.5	1	

Ref. No.	Part No.	Part Name & Description	Pcs	Remarks
R2046-48	ERDS2TJ330	C. RESISTOR 1/4W 33	3	
R2049	ERDS2FJ1R2	C. RESISTOR 1/4W 1.2	1	
R2050, 51	ERJ6GMYG332	M. RESISTOR CH 1/10W 3.3K	2	
R2052	ERDS2TJ122	C. RESISTOR 1/4W 1.2K	1	
R3001	ERJ6GMYG561	M. RESISTOR CH 1/10W 560	1	
R3002	ERJ6GMYG472	M. RESISTOR CH 1/10W 4.7K	1	
R3003	ERJ6GMYG222	M. RESISTOR CH 1/10W 2.2K	1	
R3004	ERJ6GMYG272	M. RESISTOR CH 1/10W 2.7K	1	
R3005	ERJ6GMYG332	M. RESISTOR CH 1/10W 3.3K	1	
R3006	ERDS2TJ472	C. RESISTOR 1/4W 4.7K	1	
R3007	ERJ6GMYG681	M. RESISTOR CH 1/10W 680	1	
R3008	ERJ6GMYG222	M. RESISTOR CH 1/10W 2.2K	1	
R3009	ERJ6GMYG392	M. RESISTOR CH 1/10W 3.9K	1	
R3012	ERJ6GMZOR00	M. RESISTOR CH 1/10W 0	1	
R3015	ERJ6GMYG222	M. RESISTOR CH 1/10W 2.2K	1	
R3018	ERJ6GMYJ223	M. RESISTOR CH 1/10W 22K	1	
R3019, 20	ERJ6GMYG561	M. RESISTOR CH 1/10W 560	2	
R3021	ERJ6GMYJ391	M. RESISTOR CH 1/10W 390	1	
R3022	ERJ6GMYG102	M. RESISTOR CH 1/10W 1K	1	
R3023, 24	ERJ6GMYG821	M. RESISTOR CH 1/10W 820	2	
R3025	ERJ6GMYG152	M. RESISTOR CH 1/10W 1.5K	1	
R3026	ERJ6GMYG102	M. RESISTOR CH 1/10W 1K	1	
R3029	ERJ6GMYG222	M. RESISTOR CH 1/10W 2.2K	1	
R3030	ERJ6GEYG103	M. RESISTOR CH 1/10W 10K	1	
R3031	ERJ6GEYG102	M. RESISTOR CH 1/10W 1K	1	
R3032	ERJ6GMYG334	M. RESISTOR CH 1/10W 330K	1	
R3033	ERJ6GMYJ223	M. RESISTOR CH 1/10W 22K	1	
R3034	ERJ6GMYG103	M. RESISTOR CH 1/10W 10K	1	
R3037	ERDS2TJ102	C. RESISTOR 1/4W 1K	1	
R3039	ERJ6GMYG102	M. RESISTOR CH 1/10W 1K	1	
R3065	ERJ6GMYG103	M. RESISTOR CH 1/10W 10K	1	
R3068, 69	ERJ6GMYG103	M. RESISTOR CH 1/10W 10K	2	
R3076, 77	ERJ6GMYG103	M. RESISTOR CH 1/10W 10K	2	
R3078	ERDS2TO	C. RESISTOR 1/4W 0	1	
R3079, 80	ERJ6GMYG102	M. RESISTOR CH 1/10W 1K	2	
R3081	ERJ6GMYJ221	M. RESISTOR CH 1/10W 220	1	
R3082	ERJ6GMYG152	M. RESISTOR CH 1/10W 1.5K	1	
R3083	ERDS2TJ102	C. RESISTOR 1/4W 1K	1	
R3084	ERDS2TJ330	C. RESISTOR 1/4W 33	1	
R3085	ERJ6GMYG102	M. RESISTOR CH 1/10W 1K	1	
R3087	ERJ6GMYG563	M. RESISTOR CH 1/10W 56K	1	
R4003	ERJ6GMYG100	M. RESISTOR CH 1/10W 10	1	
R4007	ERJ6GMYG153	M. RESISTOR CH 1/10W 15K	1	
R4011	ERJ6GMYG103	M. RESISTOR CH 1/10W 10K	1	
R4012	ERJ6GMYG123	M. RESISTOR CH 1/10W 12K	1	
R4013	ERJ6GMYJ163	M. RESISTOR CH 1/10W 16K	1	
R4014	ERJ6GMYG562	M. RESISTOR CH 1/10W 5.6K	1	
R4015	ERJ6GMYG333	M. RESISTOR CH 1/10W 33K	1	
R4016	ERJ6GMYJ223	M. RESISTOR CH 1/10W 22K	1	
R4017	ERJ6GMYG133	M. RESISTOR CH 1/10W 1.3K	1	
R4019	ERJ6GMYJ105	M. RESISTOR CH 1/10W 1M	1	
R4020	ERJ6GMYG123	M. RESISTOR CH 1/10W 12K	1	
R4021	ERJ6GMYG393	M. RESISTOR CH 1/10W 39K	1	
R4022	ERJ6GMYG391	M. RESISTOR CH 1/10W 390	1	
R4023	ERJ6GMYG394	M. RESISTOR CH 1/10W 390K	1	
R4024	ERDS2TJ221	C. RESISTOR 1/4W 220	1	
R4025	ERJ6GMYG682	M. RESISTOR CH 1/10W 6.8K	1	
R4026	ERJ6GMYG473	M. RESISTOR CH 1/10W 47K	1	
R4027, 28	ERJ6GMYG103	M. RESISTOR CH 1/10W 10K	2	
R4029	ERJ6GMYG912	M. RESISTOR CH 1/10W 9.1K	1	
R4030	ERJ6GMZOR00	M. RESISTOR CH 1/10W 0	1	
R4031	ERJ6GMYG222	M. RESISTOR CH 1/10W 2.2K	1	
R4032	ERJ6GMYG271	M. RESISTOR CH 1/10W 270	1	
R4033	ERJ6GMYG681	M. RESISTOR CH 1/10W 680	1	
R4034	ERJ6GMYG183	M. RESISTOR CH 1/10W 18K	1	
R4035, 36	ERJ6GMYJ223	M. RESISTOR CH 1/10W 22K	2	
R4037	ERJ6GMYG103	M. RESISTOR CH 1/10W 10K	1	
R4038	ERJ6GMYG332	M. RESISTOR CH 1/10W 3.3K	1	
R4039	ERJ6GMYG102	M. RESISTOR CH 1/10W 1K	1	
R4040	ERDS2TJ102	C. RESISTOR 1/4W 1K	1	
R4041, 42	ERJ6GMYG393	M. RESISTOR CH 1/10W 39K	2	
R4043	ERG2SJ821	M. RESISTOR 2W 820	1	
R4044	ERDS2TJ102	C. RESISTOR 1/4W 1K	1	
R4048	ERJ6GMYG473	M. RESISTOR CH 1/10W 47K	1	
R4049	ERJ6GMYG682	M. RESISTOR CH 1/10W 6.8K	1	

Ref. No.	Part No.	Part Name & Description	Pcs	Remarks
R4050	ERJ6GMYJ221	M. RESISTOR CH 1/10W 220	1	
R4051	ERJ6GMYG822	M. RESISTOR CH 1/10W 8.2K	1	
R4054	ERJ6GMZOR00	M. RESISTOR CH 1/10W 0	1	
R4055	ERJ6GMYG153	M. RESISTOR CH 1/10W 15K	1	
R4056	ERJ6GMYG393	M. RESISTOR CH 1/10W 39K	1	
R4057	ERJ6GMYG272	M. RESISTOR CH 1/10W 2.7K	1	
R4058	ERJ6GMYG472	M. RESISTOR CH 1/10W 4.7K	1	
R4059	ERJ6GMYG332	M. RESISTOR CH 1/10W 3.3K	1	
R4067, 68	ERJ6GMZOR00	M. RESISTOR CH 1/10W 0	2	
R4071	ERJ6GMZOR00	M. RESISTOR CH 1/10W 0	1	
R4073	ERJ6GMYG103	M. RESISTOR CH 1/10W 10K	1	
R4503	ERJ3RBD203	M. RESISTOR CH 1/16W 20K	1	
R4504	ERJ3GEYG224	M. RESISTOR CH 1/16W 220K	1	
R4508	ERJ3GEYG224	M. RESISTOR CH 1/16W 220K	1	
R4512	ERJ3RBD113	M. RESISTOR CH 1/16W 11K	1	
R4513	ERJ3GEYJ103	M. RESISTOR CH 1/16W 10K	1	
R4517, 18	ERJ3GEYJ221	M. RESISTOR CH 1/16W 220	2	
R4519, 20	ERJ3GEYJ103	M. RESISTOR CH 1/16W 10K	2	
R4522	ERJ3GEYK225	M. RESISTOR CH 1/16W 2.2M	1	
R4528	ERJ3RBD153	M. RESISTOR CH 1/16W 15K	1	
R4529	ERJ3GEYG562	M. RESISTOR CH 1/16W 5.6K	1	
R4530	ERJ3GEYJ334	M. RESISTOR CH 1/16W 330K	1	
R4534	ERJ3GEYJ103	M. RESISTOR CH 1/16W 10K	1	
R4542	ERJ3GEYJ223	M. RESISTOR CH 1/16W 22K	1	
R4562	ERJ3RBD822	M. RESISTOR CH 1/16W 8.2K	1	
R4563	ERJ3GEYJ272	M. RESISTOR CH 1/16W 2.7K	1	
R4584	ERJ3GEYJ103	M. RESISTOR CH 1/16W 10K	1	
R4585	ERJ3GEYOR00	M. RESISTOR CH 1/16W 0	1	
R4586	ERJ3GEYJ103	M. RESISTOR CH 1/16W 10K	1	
R4601	ERJ3GEYJ473	M. RESISTOR CH 1/16W 47K	1	
R4603, 04	ERJ3GEYJ473	M. RESISTOR CH 1/16W 47K	2	
R4605	ERJ6GEYG203	M. RESISTOR CH 1/10W 20K	1	
R4606	ERJ3GEYJ203	M. RESISTOR CH 1/16W 20K	1	
R4607	ERJ3GEYJ473	M. RESISTOR CH 1/16W 47K	1	
R4608	ERDS2TJ103	C. RESISTOR 1/4W 10K	1	
R4621	ERJ6GEYG163	M. RESISTOR CH 1/10W 16K	1	
R4623	ERJ3GEYJ221	M. RESISTOR CH 1/16W 220	1	
R4624	ERJ3GEYJ103	M. RESISTOR CH 1/16W 10K	1	
R4641, 42	ERJ3GEYOR00	M. RESISTOR CH 1/16W 0	2	
R4663, 64	ERJ3GEYJ103	M. RESISTOR CH 1/16W 10K	2	
R4695	ERJ3GEYJ473	M. RESISTOR CH 1/16W 47K	1	
R4697	ERJ6GEYG562	M. RESISTOR CH 1/10W 5.6K	1	
R4698	ERJ3GEYJ393	M. RESISTOR CH 1/16W 39K	1	
R4704	ERJ3GEYJ393	M. RESISTOR CH 1/16W 39K	1	
R6001	ERJ6GMYJ201	M. RESISTOR CH 1/10W 200	1	
R6002	ERJ6GMYG272	M. RESISTOR CH 1/10W 2.7K	1	
R6003-05	ERJ6GMYG333	M. RESISTOR CH 1/10W 33K	3	
R6006, 07	ERJ6GMYG223	M. RESISTOR CH 1/10W 22K	2	
R6008	ERJ6GMYG272	M. RESISTOR CH 1/10W 2.7K	1	
R6009	ERJ6GMYG103	M. RESISTOR CH 1/10W 10K	1	
R6010	ERJ6GMYG272	M. RESISTOR CH 1/10W 2.7K	1	
R6011	ERJ6GMYG102	M. RESISTOR CH 1/10W 1K	1	
R6012, 13	ERJ6GMYG101	M. RESISTOR CH 1/10W 100	2	
R6014	ERJ6GMYG473	M. RESISTOR CH 1/10W 47K	1	
R6015	ERJ6GMYG104	M. RESISTOR CH 1/10W 100K	1	
R6016	ERJ6GMYJ683	M. RESISTOR CH 1/10W 68K	1	
R6017	ERDS2TJ103	C. RESISTOR 1/4W 10K	1	
R6019	ERDS2TJ473	C. RESISTOR 1/4W 47K	1	
R6020	ERJ6GMYG104	M. RESISTOR CH 1/10W 100K	1	
R6021-23	ERJ6GMYG101	M. RESISTOR CH 1/10W 100	3	
R6024	ERJ6GMYG222	M. RESISTOR CH 1/10W 2.2K	1	
R6025	ERJ6GMYG103	M. RESISTOR CH 1/10W 10K	1	
R6026	ERJ6GMYG473	M. RESISTOR CH 1/10W 47K	1	
R6027	ERJ6GMYG102	M. RESISTOR CH 1/10W 1K	1	
R6028	ERJ6GMYG392	M. RESISTOR CH 1/10W 3.9K	1	
R6029, 30	ERJ6GMYG272	M. RESISTOR CH 1/10W 2.7K	2	
R6033	ERJ6GMYG272	M. RESISTOR CH 1/10W 2.7K	1	
R6034	ERJ6GMYG102	M. RESISTOR CH 1/10W 1K	1	
R6035, 36	ERJ6GMYJ221	M. RESISTOR CH 1/10W 220	2	
R6037, 38	ERJ6GMYG102	M. RESISTOR CH 1/10W 1K	2	
R6039	ERDS2TJ271	C. RESISTOR 1/4W 270	1	
R6040, 41	ERJ6GMYJ683	M. RESISTOR CH 1/10W 68K	2	
R6043	ERJ6GMYG392	M. RESISTOR CH 1/10W 3.9K	1	
R6044	ERJ6GMYG103	M. RESISTOR CH 1/10W 10K	1	
R6046	ERJ6GMYG103	M. RESISTOR CH 1/10W 10K	1	

Ref. No.	Part No.	Part Name & Description	Pcs	Remarks
R6048	ERJ6GMYG103	M. RESISTOR CH 1/10W 10K	1	
R6049	ERDS2TJ102	C. RESISTOR 1/4W 1K	1	
R6050	ERJ6GMYG102	M. RESISTOR CH 1/10W 1K	1	
R6052	ERJ6GMYG103	M. RESISTOR CH 1/10W 10K	1	
R6054	ERJ6GMYG472	M. RESISTOR CH 1/10W 4.7K	1	
R6055	ERJ6GMYG183	M. RESISTOR CH 1/10W 18K	1	
R6056-58	ERJ6GMYG102	M. RESISTOR CH 1/10W 1K	3	
R6059	ERJ6GMYG103	M. RESISTOR CH 1/10W 10K	1	
R6060	ERJ6GMYG822	M. RESISTOR CH 1/10W 8.2K	1	
R6061	ERJ6GMYG243	M. RESISTOR CH 1/10W 24K	1	
R7301	ERJ6GEYG182	M. RESISTOR CH 1/10W 1.8K	1	
R7302	ERJ3GEYG472	M. RESISTOR CH 1/16W 4.7K	1	
R7303	ERJ3GEYG152	M. RESISTOR CH 1/16W 1.5K	1	
R7308	ERJ3GEYJ121	M. RESISTOR CH 1/16W 120	1	
R7309, 10	ERJ6GEYF561	M. RESISTOR CH 1/10W 560	2	
R7311	ERJ6GEYG221	M. RESISTOR CH 1/10W 220	1	
R7312	ERJ6GEYG152	M. RESISTOR CH 1/10W 1.5K	1	
R7313, 14	ERJ3GEYG272	M. RESISTOR CH 1/16W 2.7K	2	
R7315	ERJ3GEYJ114	M. RESISTOR CH 1/16W 110K	1	
R7316	ERJ3GEYJ223	M. RESISTOR CH 1/16W 22K	1	
R7317	ERJ3GEYJ473	M. RESISTOR CH 1/16W 47K	1	
R7320	ERJ3GEYJ104	M. RESISTOR CH 1/16W 100K	1	
R7321-23	ERJ3GEYJ333	M. RESISTOR CH 1/16W 33K	3	
R7324	ERJ3GEYJ103	M. RESISTOR CH 1/16W 10K	1	
R7325	ERJ3GEYG102	M. RESISTOR CH 1/16W 1K	1	
R7326	ERJ3GEYJ104	M. RESISTOR CH 1/16W 100K	1	
R7327-29	ERJ3GEYJ333	M. RESISTOR CH 1/16W 33K	3	
R7330	ERJ3GEYOR00	M. RESISTOR CH 1/16W 0	1	
R7332	ERJ3GEYG102	M. RESISTOR CH 1/16W 1K	1	
R7333	ERJ3GEYJ104	M. RESISTOR CH 1/16W 100K	1	
R7334-36	ERJ3GEYJ333	M. RESISTOR CH 1/16W 33K	3	
R7337	ERJ3GEYOR00	M. RESISTOR CH 1/16W 0	1	
R7339	ERJ3GEYG102	M. RESISTOR CH 1/16W 1K	1	
R7341-43	ERJ6GEYJ471	M. RESISTOR CH 1/10W 470	3	
R7346	ERJ3GEYJ473	M. RESISTOR CH 1/16W 47K	1	
R7350	ERJ3GEYG102	M. RESISTOR CH 1/16W 1K	1	
R7351	ERJ3GEYJ473	M. RESISTOR CH 1/16W 47K	1	
R7352-56	ERJ3GEYJ103	M. RESISTOR CH 1/16W 10K	5	
R7357	ERJ3GEYJ473	M. RESISTOR CH 1/16W 47K	1	
R7362	ERJ3GEYG682	M. RESISTOR CH 1/16W 6.8K	1	
R7366	ERJ3GEYG102	M. RESISTOR CH 1/16W 1K	1	
R7367	ERJ3GEYJ103	M. RESISTOR CH 1/16W 10K	1	
R7368, 69	ERJ3GEYG102	M. RESISTOR CH 1/16W 1K	2	
R7370	ERJ3GEYJ103	M. RESISTOR CH 1/16W 10K	1	
R7371	ERJ3GEYG102	M. RESISTOR CH 1/16W 1K	1	
R7376, 77	ERJ3GEYJ104	M. RESISTOR CH 1/16W 100K	2	
R7378	ERJ3GEYG152	M. RESISTOR CH 1/16W 1.5K	1	
R7379	ERJ3GEYOR00	M. RESISTOR CH 1/16W 0	1	
R7381	ERJ3GEYOR00	M. RESISTOR CH 1/16W 0	1	
R7383	ERJ3GEYOR00	M. RESISTOR CH 1/16W 0	1	
R7601	ERJ6GMYG151	M. RESISTOR CH 1/10W 150	1	
R7602, 03	ERJ6GMYJ683	M. RESISTOR CH 1/10W 68K	2	
R7604	ERJ6GMYG151	M. RESISTOR CH 1/10W 150	1	
R7605-07	ERJ6GMYG102	M. RESISTOR CH 1/10W 1K	3	
R7612	ERG2SJ331	M. RESISTOR 2W 330	1	
R7614	ERJ6GMYG561	M. RESISTOR CH 1/10W 560	1	
R7615	ERJ6GMYG103	M. RESISTOR CH 1/10W 10K	1	
R7616	ERG2SJ331	M. RESISTOR 2W 330	1	
R7618	ERJ6GMYG472	M. RESISTOR CH 1/10W 4.7K	1	
R7619	ERJ6GMYG103	M. RESISTOR CH 1/10W 10K	1	
R7622, 23	ERJ6GMZOR00	M. RESISTOR CH 1/10W 0	2	
R7624	ERJ6GMYG103	M. RESISTOR CH 1/10W 10K	1	
R7625	ERJ6GMYG272	M. RESISTOR CH 1/10W 2.7K	1	
R7626	ERJ6GMYG222	M. RESISTOR CH 1/10W 2.2K	1	
R7703, 04	ERJ6GMYG101	M. RESISTOR CH 1/10W 100	2	
R7705	ERJ6GMYG102	M. RESISTOR CH 1/10W 1K	1	
R7706	ERJ6GMYG273	M. RESISTOR CH 1/10W 27K	1	
R7707	ERJ6GMYG102	M. RESISTOR CH 1/10W 1K	1	
R7708	ERJ6GMYG222	M. RESISTOR CH 1/10W 2.2K	1	
R7709, 10	ERJ6GMYG472	M. RESISTOR CH 1/10W 4.7K	2	
R7711	ERJ6GMYJ511	M. RESISTOR CH 1/10W 510	1	
R7712	ERJ6GMYG561	M. RESISTOR CH 1/10W 560	1	
R7713	ERJ6GMYG102	M. RESISTOR CH 1/10W 1K	1	
R7714-19	ERJ6GMYG101	M. RESISTOR CH 1/10W 100	6	
R7722, 23	ERJ6GMYG472	M. RESISTOR CH 1/10W 4.7K	2	

Ref. No.	Part No.	Part Name & Description	Pcs	Remarks
R7725	ERJ6GMYG332	M. RESISTOR CH 1/10W 3.3K	1	
R7726	ERJ6GMYG273	M. RESISTOR CH 1/10W 27K	1	
R7727	ERJ6GMYG472	M. RESISTOR CH 1/10W 4.7K	1	
R7732	ERJ6GMYG472	M. RESISTOR CH 1/10W 4.7K	1	
R7733	ERJ6GMYG104	M. RESISTOR CH 1/10W 100K	1	
R7735	ERJ6GMYG104	M. RESISTOR CH 1/10W 100K	1	
R7736	ERJ6GMYG472	M. RESISTOR CH 1/10W 4.7K	1	
R7737, 38	ERJ6GMYJ221	M. RESISTOR CH 1/10W 220	2	
R7739	ERJ6GMYG102	M. RESISTOR CH 1/10W 1K	1	
R7740	ERJ6GMYG911	M. RESISTOR CH 1/10W 910	1	
R7746	ERJ6GMYG393	M. RESISTOR CH 1/10W 39K	1	
R7747	ERJ6GMYG472	M. RESISTOR CH 1/10W 4.7K	1	
R7750	ERJ6GMYG331	M. RESISTOR CH 1/10W 330	1	
R7751, 52	ERJ6GMYG102	M. RESISTOR CH 1/10W 1K	2	
R7754	ERJ6GMYG102	M. RESISTOR CH 1/10W 1K	1	
R7755	ERJ6GMYG202	M. RESISTOR CH 1/10W 2K	1	
R7756	ERJ6GMYG473	M. RESISTOR CH 1/10W 47K	1	
R7757	ERJ6GMYG101	M. RESISTOR CH 1/10W 100	1	
R7758	ERJ6GMYG273	M. RESISTOR CH 1/10W 27K	1	
R7759	ERJ6GMYJ362	M. RESISTOR CH 1/10W 3.6K	1	
R7760	ERJ6GMYG752	M. RESISTOR CH 1/10W 7.5K	1	
R7761	ERJ6GMYG272	M. RESISTOR CH 1/10W 2.7K	1	
R7762	ERJ6GMYG202	M. RESISTOR CH 1/10W 2K	1	
R7763	ERJ6GMYJ302	M. RESISTOR CH 1/10W 3K	1	
R7766-68	ERJ6GMYG101	M. RESISTOR CH 1/10W 100	3	
R7769	ERJ6GMYG273	M. RESISTOR CH 1/10W 27K	1	
R7770	ERJ6GMYG224	M. RESISTOR CH 1/10W 220K	1	
R7771	ERJ6GMYG104	M. RESISTOR CH 1/10W 100K	1	
R7772	ERDS2TJ221	C. RESISTOR 1/4W 220	1	
R7773	ERJ6GMYJ223	M. RESISTOR CH 1/10W 22K	1	
R7774	ERJ6GMYG104	M. RESISTOR CH 1/10W 100K	1	
R7775	ERJ6GMYG473	M. RESISTOR CH 1/10W 47K	1	
R7776	ERJ6GMYG472	M. RESISTOR CH 1/10W 4.7K	1	
R7777	ERJ6GMYK225	M. RESISTOR CH 1/10W 2.2M	1	
R7781	ERJ6GMYG224	M. RESISTOR CH 1/10W 220K	1	
R7782	ERJ6GMYG101	M. RESISTOR CH 1/10W 100	1	
R7785	ERJ6GMYG101	M. RESISTOR CH 1/10W 100	1	
R7786, 87	ERJ6GMYJ221	M. RESISTOR CH 1/10W 220	2	
R7788	ERJ6GMYG103	M. RESISTOR CH 1/10W 10K	1	
R7789	ERJ6GMYG154	M. RESISTOR CH 1/10W 150K	1	
RX7701	EXBF9E103J	RESISTOR-RESISTOR	1	
S6001	VES0709	SWITCH	1	
T0703	EQV5EC071A	TRANSFORMER	1	
T0704	EQV5EC072A	TRANSFORMER	1	
T4002	EIQ7QF014Q	TRANSFORMER	1	
⚠ TU7601	ENG47259G1	TUNER	1	[SUPPLIED FROM MBV]
VR0701	EVNCBAA00B24	V. RESISTOR 20K	1	
VR2001	EVNCYAA03B54	V. RESISTOR 50K	1	
VR3001, 02	EVNCYAA03B23	V. RESISTOR 2K	2	
VR3012, 13	EVNCYAA03B52	V. RESISTOR 500	2	
VR3014	EVNCYAA03B54	V. RESISTOR 50K	1	
VR4001	EVNCYAA03B15	V. RESISTOR 100K	1	
VR4501	EVMECSA00BS3	V. RESISTOR 6.8K	1	
VR4509	EVMECSA00B53	V. RESISTOR 5K	1	
VR4550	EVMECSA00B14	V. RESISTOR 10K	1	
X301	VSX0162	CRYSTAL OSCILLATOR	1	
X0701	VLF1178	FILTER	1	
X0703	EFCS5R5MW5	FILTER	1	
X0704	VLF1368	FILTER	1	[SUPPLIED FROM MBV]
X6001	VSX0583	CRYSTAL OSCILLATOR	1	
X7302	VSX0877	CRYSTAL OSCILLATOR	1	[SUPPLIED FROM MBV]
X7303	EFOEC4004A4	CERAMIC OSCILLATOR	1	
X7702	VSX0353	CRYSTAL OSCILLATOR	1	
		MISCELLANEOUS		
	VMP4894	SUPPORT ANGLE	2	
	VMD2329	PHOTO TRANSISTOR HOLDER	2	
	VMD2328	REEL GUIDE	1	
	VMD2330	LED HOLDER	1	

Ref. No.	Part No.	Part Name & Description	Pcs	Remarks
	VMT0332	SPACER	2	FOR NICAM DECODER C.B.A.
	VSC3553	SHIELD COVER (MAIN)	1	FOR NICAM DECODER C.B.A.
	VSC3555	SHIELD COVER (BOTTOM)	1	FOR NICAM DECODER C.B.A.
	VMT0784	SPACER	1	FOR NICAM DECODER C.B.A.
	VMP4471	TV DEMODULATOR ANGLE	1	FOR TV DEMODU. C.B.A.
■	VEP03D96A	INPUT/OUTPUT C.B.A.		[SUPPLIED FROM MBV]
				(RTL)
C3905	ECUM1H104ZFN	C. CAPACITOR CH 50V 0.1U	1	
C3906	ECEA0JKA331	E. CAPACITOR 6.3V 330U	1	
C3907, 08	ECEA1CKA100	E. CAPACITOR 16V 10U	2	
C3917	ECEA1CKA470	E. CAPACITOR 16V 47U	1	
C3918	ECUM1H104ZFN	C. CAPACITOR CH 50V 0.1U	1	
C3919	ECEA1CKA470	E. CAPACITOR 16V 47U	1	
C3920	ECUM1H104ZFN	C. CAPACITOR CH 50V 0.1U	1	
C3923	ECEA1CKA470	E. CAPACITOR 16V 47U	1	
C3924, 25	ECUM1C105ZFN	C. CAPACITOR CH 16V 1U	2	
C3926	ECEA1CKA100	E. CAPACITOR 16V 10U	1	
C4901-08	ECUM1H471JCN	C. CAPACITOR CH 50V 470P	8	
C4909	ECUM1H104ZFN	C. CAPACITOR CH 50V 0.1U	1	
C4910, 11	ECUM1H471JCN	C. CAPACITOR CH 50V 470P	2	
C4913	ECEA1CKA100	E. CAPACITOR 16V 10U	1	
C4914	ECUM1H104ZFN	C. CAPACITOR CH 50V 0.1U	1	
C4915	ECEA1CKA470	E. CAPACITOR 16V 47U	1	
C4916, 17	ECUM1C105ZFN	C. CAPACITOR CH 16V 1U	2	
D3901, 02	MA4056-M	DIODE	2	
D3903	MA4120-M	DIODE	1	
D3905	MA151K	DIODE	1	
IC3902	MC14053BF	IC	1	
IC3903	MC14052BF	IC	1	
IC3906	MC14051BF	IC	1	
IC4901	MC14052BF	IC	1	
IC4902, 03	NJM4558M	IC	2	
IC4904	MC14052BF	IC	1	
JK3901	VEJ1764	JACK	1	[SUPPLIED FROM MBV]
JK3902, 03	VJS1470	JACK	2	
K4906	ERJ6GEY0R00	M. RESISTOR CH 1/10W 0	1	
L3904	VLQ0599J330	COIL 33UH	1	
L4903	VLQ0599J101	COIL 100UH	1	
L4904	VLQ0599J330	COIL 33UH	1	
PS3901	VJS3042B010W	CONNECTOR (FEMALE) 10P	1	
PS3902	VJS3042B008W	CONNECTOR (FEMALE) 8P	1	
PS3903	VJS3042B005W	CONNECTOR (FEMALE) 5P	1	
PS3904	VJS3042F013W	CONNECTOR (FEMALE) 13P	1	
Q3901, 02	MSD601	TRANSISTOR	2	
Q3903, 04	MSB709	TRANSISTOR	2	
Q3909	MSD1328	TRANSISTOR	1	
QR3901	MUN2212	TRANSISTOR-RESISTOR	1	
QR3903	MUN2212	TRANSISTOR-RESISTOR	1	
QR3904	MUN2111	TRANSISTOR-RESISTOR	1	
R3901, 02	ERJ6GEYG153	M. RESISTOR CH 1/10W 15K	2	
R3903	ERJ6GEYG103	M. RESISTOR CH 1/10W 10K	1	
R3904	ERJ6GEYF472	M. RESISTOR CH 1/10W 4.7K	1	
R3905	ERJ6GEY0R00	M. RESISTOR CH 1/10W 0	1	
R3910-12	ERJ6GEYG103	M. RESISTOR CH 1/10W 10K	3	
R3919	ERJ6GEYG683	M. RESISTOR CH 1/10W 68K	1	
R3920	ERJ6GEYF473	M. RESISTOR CH 1/10W 47K	1	
R3921	ERJ6GEYG683	M. RESISTOR CH 1/10W 68K	1	
R3922	ERJ6GEYF473	M. RESISTOR CH 1/10W 47K	1	
R3923, 24	ERJ6GEYG331	M. RESISTOR CH 1/10W 330	2	
R3925, 26	ERJ6GEYG121	M. RESISTOR CH 1/10W 120	2	
R3928, 29	ERJ6GEYG121	M. RESISTOR CH 1/10W 120	2	
R3930	ERJ6GEYG750	M. RESISTOR CH 1/10W 75	1	
R3932-34	ERJ6GEYG750	M. RESISTOR CH 1/10W 75	3	

Ref. No.	Part No.	Part Name & Description	Pcs	Remarks
R3935	ERJ6GEY0R00	M. RESISTOR CH 1/10W 0	1	
R3937	ERJ6GEYF822	M. RESISTOR CH 1/10W 8.2K	1	
R3938	ERJ6GEYF472	M. RESISTOR CH 1/10W 4.7K	1	
R3946	ERJ6GEYG223	M. RESISTOR CH 1/10W 22K	1	
R3947	ERDS2TJ561	C. RESISTOR 1/4W 560	1	
R3950	ERJ6GEYG103	M. RESISTOR CH 1/10W 10K	1	
R3953	ERJ6GEYF561	M. RESISTOR CH 1/10W 560	1	
R3954	ERJ6GEYG104	M. RESISTOR CH 1/10W 100K	1	
R4901	ERJ6GEYF473	M. RESISTOR CH 1/10W 47K	1	
R4902, 03	ERJ6GEY0R00	M. RESISTOR CH 1/10W 0	2	
R4904	ERJ6GEYF473	M. RESISTOR CH 1/10W 47K	1	
R4905	ERJ6GEY0R00	M. RESISTOR CH 1/10W 0	1	
R4906-13	ERJ6GEYG101	M. RESISTOR CH 1/10W 100	8	
R4914, 15	ERJ6GEYJ471	M. RESISTOR CH 1/10W 470	2	
R4916	ERJ6GEYG752	M. RESISTOR CH 1/10W 7.5K	1	
R4917, 18	ERJ6GEYG103	M. RESISTOR CH 1/10W 10K	2	
R4919	ERJ6GEYG683	M. RESISTOR CH 1/10W 68K	1	
R4920	ERJ6GEYG223	M. RESISTOR CH 1/10W 22K	1	
R4921	ERJ6GEYG683	M. RESISTOR CH 1/10W 68K	1	
R4922	ERJ6GEYG223	M. RESISTOR CH 1/10W 22K	1	
R4924	ERJ6GEYG752	M. RESISTOR CH 1/10W 7.5K	1	
R4925, 26	ERJ6GEYG103	M. RESISTOR CH 1/10W 10K	2	
R4927, 28	ERJ6GEYG153	M. RESISTOR CH 1/10W 15K	2	
R4929	ERJ6GEY0R00	M. RESISTOR CH 1/10W 0	1	
R4930, 31	ERJ6GEYF473	M. RESISTOR CH 1/10W 47K	2	
R4932, 33	ERJ6GEY0R00	M. RESISTOR CH 1/10W 0	2	
R4934, 35	ERJ6GEYG221	M. RESISTOR CH 1/10W 220	2	
		MISCELLANEOUS		
	XTV3+8GFZ	SCREW	4	
■	VEP05349A	HEAD AMP G. B. A.		[SUPPLIED FROM MBV]
				(RTL)
C503	ECUM1C474ZFN	C. CAPACITOR CH 16V 0.47U	1	
C506	ECUM1C474ZFN	C. CAPACITOR CH 16V 0.47U	1	
C507	ECUM1H102KBN	C. CAPACITOR CH 50V 1000P	1	
C510	ECUM1H103ZFN	C. CAPACITOR CH 50V 0.01U	1	
C511	ECEA0JKA221	E. CAPACITOR 6.3V 220U	1	
C512	ECUM1C105ZFN	C. CAPACITOR CH 16V 1U	1	
C513, 14	ECUM1H103ZFN	C. CAPACITOR CH 50V 0.01U	2	
C515	ECUM1H102KBN	C. CAPACITOR CH 50V 1000P	1	
C516	ECUM1H104ZFN	C. CAPACITOR CH 50V 0.1U	1	
C517, 18	ECUM1H102KBN	C. CAPACITOR CH 50V 1000P	2	
C519	ECEA0JKA470	E. CAPACITOR 6.3V 47U	1	
D501, 02	1SS254	DIODE	2	
IC501	STV5728	IC	1	[SUPPLIED FROM MBV]
K501-06	ERJ6GEY0R00	M. RESISTOR CH 1/10W 0	6	
L502, 03	VLQ0599J330	COIL 33UH	2	
P501	VJS3537B020G	CONNECTOR (FEMALE) 20P	1	
P502	VJS3958	CONNECTOR (FEMALE) 11P	1	[SUPPLIED FROM MBV]
Q503, 04	MSD601	TRANSISTOR	2	
QR501, 02	MUN2213	TRANSISTOR-RESISTOR	2	
R501	ERJ6GEYJ100	M. RESISTOR CH 1/10W 10	1	
R502	ERJ6GEYG621	M. RESISTOR CH 1/10W 620	1	
R504	ERJ6GEYG621	M. RESISTOR CH 1/10W 620	1	
R510	ERJ6GEYG184	M. RESISTOR CH 1/10W 180K	1	
R511	ERJ6GEYG152	M. RESISTOR CH 1/10W 1.5K	1	
R512	ERJ6GEYG621	M. RESISTOR CH 1/10W 620	1	
R513	ERJ6GEYG184	M. RESISTOR CH 1/10W 180K	1	
R514	ERJ6GEYG223	M. RESISTOR CH 1/10W 22K	1	
R515	ERJ6GEYG103	M. RESISTOR CH 1/10W 10K	1	
R516	ERJ6GEYG223	M. RESISTOR CH 1/10W 22K	1	
R517	ERJ6GEYF333	M. RESISTOR CH 1/10W 33K	1	
R518	ERJ6GEYG272	M. RESISTOR CH 1/10W 2.7K	1	
R519	ERJ6GEYG183	M. RESISTOR CH 1/10W 18K	1	

Ref. No.	Part No.	Part Name & Description	Pcs	Remarks
R520-22	ERJ6GEYG102	M. RESISTOR CH 1/10W 1K	3	
R523	ERJ6GEYG103	M. RESISTOR CH 1/10W 10K	1	
R524	ERJ6GEYG101	M. RESISTOR CH 1/10W 100	1	
		MISCELLANEOUS		
	VSC4630	SHIELD COVER (TOP)	1	[SUPPLIED FROM MBV]
	VSC4631	SHIELD COVER (MAIN)	1	[SUPPLIED FROM MBV]
	VSC3770	SHIELD COVER (BOTTOM)	1	
■	VEP07957A	TIMER G. B. A.		[SUPPLIED FROM MBV]
				(RTL)
				NV-HD620EG/EG H
C7501	ECUM1H221JCN	C. CAPACITOR CH 50V 220P	1	
C7502	ECUM1H103ZFN	C. CAPACITOR CH 50V 0.01U	1	
C7503	ECA0JM221	E. CAPACITOR 6.3V 220U	1	
C7504	ECUM1H103ZFN	C. CAPACITOR CH 50V 0.01U	1	
C7505	ECUM1H104ZFN	C. CAPACITOR CH 50V 0.1U	1	
C7506	ECUM1H560JCN	C. CAPACITOR CH 50V 56P	1	
C7507	ECUM1H270JCN	C. CAPACITOR CH 50V 27P	1	
C7508	ECUM1H220JCN	C. CAPACITOR CH 50V 22P	1	
C7509	ECEA1HKA100	E. CAPACITOR 50V 10U	1	
C7510, 11	ECUM1H103ZFN	C. CAPACITOR CH 50V 0.01U	2	
C7514	ECUM1H103ZFN	C. CAPACITOR CH 50V 0.01U	1	
C7515, 16	ECUM1H104ZFN	C. CAPACITOR CH 50V 0.1U	2	
C7519, 20	ECUM1H101JCN	C. CAPACITOR CH 50V 100P	2	
C7521	ECEA0JKA470	E. CAPACITOR 6.3V 47U	1	
D7501	MA723-VT	DIODE	1	
D7502	MA4220	DIODE	1	
D7503-05	1SS254	DIODE	3	
D7509	HLMF-D205	DIODE	1	[SUPPLIED FROM MBV]
D7527	1SS254	DIODE	1	
D7529-31	1SS254	DIODE	3	
D7533-36	1SS254	DIODE	4	
DP7501	VSL0468	DISPLAY TUBE	1	[SUPPLIED FROM MBV]
IC7501	PST7023	IC	1	
IC7502	S80743AL	IC	1	
IC7503	M37507V6AJ	IC	1	[SUPPLIED FROM MBV]
IR7501	RPM675CBRX10	IR RECEIVER UNIT	1	
K7504	ERJ6GEY0R00	M. RESISTOR CH 1/10W 0	1	
PP7501	VJP3405A009W	CONNECTOR (MALE) 9P	1	
PS7501	VJS3673B025G	CONNECTOR (FEMALE) 25P	1	
PS7502	VJS3673F005G	CONNECTOR (FEMALE) 5P	1	[SUPPLIED FROM MBV]
QR7506	MUN2111	TRANSISTOR-RESISTOR	1	
R7501	ERJ6GEYG221	M. RESISTOR CH 1/10W 220	1	
R7502	ERDS2TJ8R2	C. RESISTOR 1/4W 8.2	1	
R7503, 04	ERJ6GEYG132	M. RESISTOR CH 1/10W 1.3K	2	
R7505	ERJ6GEYG331	M. RESISTOR CH 1/10W 330	1	
R7506	ERJ6GEYJ224	M. RESISTOR CH 1/10W 220K	1	
R7507	ERJ6GEYG103	M. RESISTOR CH 1/10W 10K	1	
R7508	ERJ6GEYG221	M. RESISTOR CH 1/10W 220	1	
R7509	ERJ6GEYG101	M. RESISTOR CH 1/10W 100	1	
R7510	ERJ6GEYG102	M. RESISTOR CH 1/10W 1K	1	
R7511, 12	ERJ6GEYG221	M. RESISTOR CH 1/10W 220	2	
R7513	ERJ6GEY0R00	M. RESISTOR CH 1/10W 0	1	
R7514	ERJ6GEYG221	M. RESISTOR CH 1/10W 220	1	
R7515	ERJ6GEYG332	M. RESISTOR CH 1/10W 3.3K	1	
R7516	ERJ6GEYG221	M. RESISTOR CH 1/10W 220	1	
R7517	ERJ6GEYG332	M. RESISTOR CH 1/10W 3.3K	1	
R7521-23	ERJ6GEYG221	M. RESISTOR CH 1/10W 220	3	
R7524-26	ERJ6GEYG332	M. RESISTOR CH 1/10W 3.3K	3	
R7527	ERJ6GEYG103	M. RESISTOR CH 1/10W 10K	1	
R7528	ERJ6GEYG221	M. RESISTOR CH 1/10W 220	1	
R7529	ERDS2TJ470	C. RESISTOR 1/4W 47	1	
R7532	ERJ6GEYG332	M. RESISTOR CH 1/10W 3.3K	1	
R7533	ERJ6GEYG221	M. RESISTOR CH 1/10W 220	1	

Ref. No.	Part No.	Part Name & Description	Pcs	Remarks
R7534	ERJ6GEYG332	M. RESISTOR CH 1/10W 3.3K	1	
S7501-03	EVQ11G09K	SWITCH	3	[SUPPLIED FROM MBV]
S7506	EVQ11G09K	SWITCH	1	[SUPPLIED FROM MBV]
S7508, 09	EVQ11G09K	SWITCH	2	[SUPPLIED FROM MBV]
S7512-14	EVQ11G09K	SWITCH	3	[SUPPLIED FROM MBV]
VC7501	ECRHA010A54R	V. CAPACITOR 50K	1	
X7501	VSX0608	CRYSTAL OSCILLATOR	1	
X7502	VSX0094	CRYSTAL OSCILLATOR	1	
		MISCELLANEOUS		
	VMD2247	IR RECEIVER HOLDER	1	
	VJF1148	FIP HOLDER	1	
	VMD1047	LED SPACER	1	
■	VEP07957B	TIMER C. B. A.		[SUPPLIED FROM MBV]
				(RTL)
				NV-HD620B/BL
C7501	ECUM1H221JCN	C. CAPACITOR CH 50V 220P	1	
C7502	ECUM1H103ZFN	C. CAPACITOR CH 50V 0.01U	1	
C7503	ECA0JM221	E. CAPACITOR 6.3V 220U	1	
C7504	ECUM1H103ZFN	C. CAPACITOR CH 50V 0.01U	1	
C7505	ECUM1H104ZFN	C. CAPACITOR CH 50V 0.1U	1	
C7506	ECUM1H560JCN	C. CAPACITOR CH 50V 56P	1	
C7507	ECUM1H270JCN	C. CAPACITOR CH 50V 27P	1	
C7508	ECUM1H220JCN	C. CAPACITOR CH 50V 22P	1	
C7509	ECEA1HKA100	E. CAPACITOR 50V 10U	1	
C7510, 11	ECUM1H103ZFN	C. CAPACITOR CH 50V 0.01U	2	
C7514	ECUM1H103ZFN	C. CAPACITOR CH 50V 0.01U	1	
C7515, 16	ECUM1H104ZFN	C. CAPACITOR CH 50V 0.1U	2	
C7519, 20	ECUM1H101JCN	C. CAPACITOR CH 50V 100P	2	
C7521	ECEA0JKA470	E. CAPACITOR 6.3V 47U	1	
D7501	MA723-VT	DIODE	1	
D7502	MA4220	DIODE	1	
D7503-06	1SS254	DIODE	4	
D7509	HLMF-D205	DIODE	1	[SUPPLIED FROM MBV]
D7518	1SS254	DIODE	1	
D7527	1SS254	DIODE	1	
D7529-31	1SS254	DIODE	3	
D7533-36	1SS254	DIODE	4	
DP7501	VSL0468	DISPLAY TUBE	1	[SUPPLIED FROM MBV]
IC7501	PST7023	IC	1	
IC7502	S80743AL	IC	1	
IC7503	M37507V6AJ	IC	1	[SUPPLIED FROM MBV]
IR7501	RPM675CBRX10	IR RECEIVER UNIT	1	
K7504	ERJ6GEY0R00	M. RESISTOR CH 1/10W 0	1	
PP7501	VJP3405A009W	CONNECTOR (MALE) 9P	1	
PS7501	VJS3673B025G	CONNECTOR (FEMALE) 25P	1	
PS7502	VJS3673F005G	CONNECTOR (FEMALE) 5P	1	[SUPPLIED FROM MBV]
QR7506	MUN2111	TRANSISTOR-RESISTOR	1	
R7501	ERJ6GEYG221	M. RESISTOR CH 1/10W 220	1	
R7502	ERDS2TJ8R2	C. RESISTOR 1/4W 8.2	1	
R7503, 04	ERJ6GEYG132	M. RESISTOR CH 1/10W 1.3K	2	
R7505	ERJ6GEYG331	M. RESISTOR CH 1/10W 330	1	
R7506	ERJ6GEYJ224	M. RESISTOR CH 1/10W 220K	1	
R7507	ERJ6GEYG103	M. RESISTOR CH 1/10W 10K	1	
R7508	ERJ6GEYG221	M. RESISTOR CH 1/10W 220	1	
R7509	ERJ6GEYG101	M. RESISTOR CH 1/10W 100	1	
R7510	ERJ6GEYG102	M. RESISTOR CH 1/10W 1K	1	
R7511, 12	ERJ6GEYG221	M. RESISTOR CH 1/10W 220	2	
R7513	ERJ6GEY0R00	M. RESISTOR CH 1/10W 0	1	
R7514	ERJ6GEYG221	M. RESISTOR CH 1/10W 220	1	
R7515	ERJ6GEYG332	M. RESISTOR CH 1/10W 3.3K	1	

Ref. No.	Part No.	Part Name & Description	Pcs	Remarks
R7516	ERJ6GEYG221	M. RESISTOR CH 1/10W 220	1	
R7517	ERJ6GEYG332	M. RESISTOR CH 1/10W 3.3K	1	
R7521-23	ERJ6GEYG221	M. RESISTOR CH 1/10W 220	3	
R7524-26	ERJ6GEYG332	M. RESISTOR CH 1/10W 3.3K	3	
R7527	ERJ6GEYG103	M. RESISTOR CH 1/10W 10K	1	
R7528	ERJ6GEYG221	M. RESISTOR CH 1/10W 220	1	
R7529	ERDS2TJ470	C. RESISTOR 1/4W 47	1	
R7532	ERJ6GEYG332	M. RESISTOR CH 1/10W 3.3K	1	
R7533	ERJ6GEYG221	M. RESISTOR CH 1/10W 220	1	
R7534	ERJ6GEYG332	M. RESISTOR CH 1/10W 3.3K	1	
R7537	ERJ6GEYG103	M. RESISTOR CH 1/10W 10K	1	
S7501-03	EVQ11G09K	SWITCH	3	[SUPPLIED FROM MBV]
S7506	EVQ11G09K	SWITCH	1	[SUPPLIED FROM MBV]
S7508, 09	EVQ11G09K	SWITCH	2	[SUPPLIED FROM MBV]
S7512-14	EVQ11G09K	SWITCH	3	[SUPPLIED FROM MBV]
VC7501	ECRHA010A54R	V. CAPACITOR 50K	1	
X7501	VSX0608	CRYSTAL OSCILLATOR	1	
X7502	VSX0094	CRYSTAL OSCILLATOR	1	
		MISCELLANEOUS		
	VMD2247	IR RECEIVER HOLDER	1	
	VJF1148	FIP HOLDER	1	
	VMD1047	LED SPACER	1	
■	VEP07957C	TIMER C. B. A.		[SUPPLIED FROM MBV]
				(RTL)
				NV-HD620EG
C7501	ECUM1H221JCN	C. CAPACITOR CH 50V 220P	1	
C7502	ECUM1H103ZFN	C. CAPACITOR CH 50V 0.01U	1	
C7503	ECA0JM221	E. CAPACITOR 6.3V 220U	1	
C7504	ECUM1H103ZFN	C. CAPACITOR CH 50V 0.01U	1	
C7505	ECUM1H104ZFN	C. CAPACITOR CH 50V 0.1U	1	
C7506	ECUM1H560JCN	C. CAPACITOR CH 50V 56P	1	
C7507	ECUM1H270JCN	C. CAPACITOR CH 50V 27P	1	
C7508	ECUM1H220JCN	C. CAPACITOR CH 50V 22P	1	
C7509	ECEA1HKA100	E. CAPACITOR 50V 10U	1	
C7510, 11	ECUM1H103ZFN	C. CAPACITOR CH 50V 0.01U	2	
C7514	ECUM1H103ZFN	C. CAPACITOR CH 50V 0.01U	1	
C7515, 16	ECUM1H104ZFN	C. CAPACITOR CH 50V 0.1U	2	
C7519, 20	ECUM1H101JCN	C. CAPACITOR CH 50V 100P	2	
C7521	ECEA0JKA470	E. CAPACITOR 6.3V 47U	1	
D7501	MA723-VT	DIODE	1	
D7502	MA4220	DIODE	1	
D7503-05	1SS254	DIODE	3	
D7509	HLMF-D205	DIODE	1	[SUPPLIED FROM MBV]
D7518	1SS254	DIODE	1	
D7527	1SS254	DIODE	1	
D7529-31	1SS254	DIODE	3	
D7533-36	1SS254	DIODE	4	
DP7501	VSL0468	DISPLAY TUBE	1	[SUPPLIED FROM MBV]
IC7501	PST7023	IC	1	
IC7502	S80743AL	IC	1	
IC7503	M37507V6AJ	IC	1	[SUPPLIED FROM MBV]
IR7501	RPM675CBRX10	IR RECEIVER UNIT	1	
K7504	ERJ6GEY0R00	M. RESISTOR CH 1/10W 0	1	
PP7501	VJP3405A009W	CONNECTOR (MALE) 9P	1	
PS7501	VJS3673B025G	CONNECTOR (FEMALE) 25P	1	
PS7502	VJS3673F005G	CONNECTOR (FEMALE) 5P	1	[SUPPLIED FROM MBV]
QR7506	MUN2111	TRANSISTOR-RESISTOR	1	
R7501	ERJ6GEYG221	M. RESISTOR CH 1/10W 220	1	
R7502	ERDS2TJ8R2	C. RESISTOR 1/4W 8.2	1	
R7503, 04	ERJ6GEYG132	M. RESISTOR CH 1/10W 1.3K	2	

Ref. No.	Part No.	Part Name & Description	Pcs	Remarks
R7505	ERJ6GEYG331	M. RESISTOR CH 1/10W 330	1	
R7506	ERJ6GEYJ224	M. RESISTOR CH 1/10W 220K	1	
R7507	ERJ6GEYG103	M. RESISTOR CH 1/10W 10K	1	
R7508	ERJ6GEYG221	M. RESISTOR CH 1/10W 220	1	
R7509	ERJ6GEYG101	M. RESISTOR CH 1/10W 100	1	
R7510	ERJ6GEYG102	M. RESISTOR CH 1/10W 1K	1	
R7511, 12	ERJ6GEYG221	M. RESISTOR CH 1/10W 220	2	
R7513	ERJ6GEY0R00	M. RESISTOR CH 1/10W 0	1	
R7514	ERJ6GEYG221	M. RESISTOR CH 1/10W 220	1	
R7515	ERJ6GEYG332	M. RESISTOR CH 1/10W 3.3K	1	
R7516	ERJ6GEYG221	M. RESISTOR CH 1/10W 220	1	
R7517	ERJ6GEYG332	M. RESISTOR CH 1/10W 3.3K	1	
R7521-23	ERJ6GEYG221	M. RESISTOR CH 1/10W 220	3	
R7524-26	ERJ6GEYG332	M. RESISTOR CH 1/10W 3.3K	3	
R7527	ERJ6GEYG103	M. RESISTOR CH 1/10W 10K	1	
R7528	ERJ6GEYG221	M. RESISTOR CH 1/10W 220	1	
R7529	ERDS2TJ470	C. RESISTOR 1/4W 47	1	
R7532	ERJ6GEYG332	M. RESISTOR CH 1/10W 3.3K	1	
R7533	ERJ6GEYG221	M. RESISTOR CH 1/10W 220	1	
R7534	ERJ6GEYG332	M. RESISTOR CH 1/10W 3.3K	1	
R7537	ERJ6GEYG103	M. RESISTOR CH 1/10W 10K	1	
S7501-03	EVQ11G09K	SWITCH	3	[SUPPLIED FROM MBV]
S7506	EVQ11G09K	SWITCH	1	[SUPPLIED FROM MBV]
S7508, 09	EVQ11G09K	SWITCH	2	[SUPPLIED FROM MBV]
S7512-14	EVQ11G09K	SWITCH	3	[SUPPLIED FROM MBV]
VC7501	ECRHA010A54R	V. CAPACITOR 50K	1	
X7501	VSX0608	CRYSTAL OSCILLATOR	1	
X7502	VSX0094	CRYSTAL OSCILLATOR	1	
		MISCELLANEOUS		
	VMD2247	IR RECEIVER HOLDER	1	
	VJF1148	FIP HOLDER	1	
	VMD1047	LED SPACER	1	
■	VEP06B98A	AV FRONT C. B. A.		[SUPPLIED FROM MBV]
				(RTL)
C6515	VCE0073	SUPER CAPACITOR	1	
PS6501	VJS3405A009A	CONNECTOR (FEMALE) 9P	1	
R6528	ERJ6GEYG181	M. RESISTOR CH 1/10W 180	1	
S6501, 02	EVQ11G09K	SWITCH	2	[SUPPLIED FROM MBV]
S6504	EVQ11G09K	SWITCH	1	[SUPPLIED FROM MBV]
⚠ ■	VEP01763C	SWITCH POWER C. B. A.		[SUPPLIED FROM MBV]
				(RTL)
⚠ C1101	ECKMWS102MEF	C. CAPACITOR 1000P	1	
⚠ C1104	ECKMWS102MEF	C. CAPACITOR 1000P	1	
C1106	VCF6AL104K	P. CAPACITOR 0.1U	1	[SUPPLIED FROM MBV]
⚠ C1107	ECKMWS102MEF	C. CAPACITOR 1000P	1	
⚠ C1110, 11	VCF2AAF104M	P. CAPACITOR 100V 0.1U	2	[SUPPLIED FROM MBV]
C1112	ECEC2GG330	E. CAPACITOR 400V 33U	1	
C1113	ECKD2H103PU	C. CAPACITOR 500V 0.01U	1	
C1114	ECCD3A470KGE	C. CAPACITOR 1KV 47P	1	
C1115	ECA1VGE470X	E. CAPACITOR 35V 47U	1	
C1116	ECEA1HGE470	E. CAPACITOR 50V 47U	1	
C1117	VCF1JAH104	P. CAPACITOR 63V 0.1U	1	[SUPPLIED FROM MBV]
C1118	ECKF1H102KB	C. CAPACITOR 50V 1000P	1	
C1120	ECQB1H103JF	P. CAPACITOR 50V 0.01U	1	
C1121	EEUFA1E681	E. CAPASITOR 25V 680U	1	
C1122	ECEA1EGE221	E. CAPACITOR 25V 220U	1	
C1123	ECKD2H101KB	C. CAPACITOR 500V 100P	1	
C1124	EEUFA1A122	E. CAPASITOR 10V 1200U	1	
C1125	ECEA1AGE331	E. CAPACITOR 10V 330U	1	
C1127	ECA1HFQ560	E. CAPACITOR 50V 56U	1	
C1128	ECKF1H103ZF	C. CAPACITOR 50V 0.01U	1	
C1129	ECKD2H101KB	C. CAPACITOR 500V 100P	1	

Ref. No.	Part No.	Part Name & Description	Pcs	Remarks
C1130	ECA1VFQ560	E. CAPACITOR 35V 56U	1	
C1131	ECKF1H103ZF	C. CAPACITOR 50V 0.01U	1	
C1133	ECA0JFQ221	E. CAPACITOR 6.3V 220U	1	
C1134, 35	ECQB1H103JF	P. CAPACITOR 50V 0.01U	2	
C1136	ECKF1H391KB	C. CAPACITOR 50V 390P	1	
C1147	ECKF1H102KB	C. CAPACITOR 50V 1000P	1	
C1148	VCF1JAH104	P. CAPACITOR 63V 0.1U	1	[SUPPLIED FROM MBV]
C1150	ECQB1H103JF	P. CAPACITOR 50V 0.01U	1	
D1102	S1WBA60S	DIODE	1	
D1103	AP01C	DIODE	1	
D1104	MA185	DIODE	1	
D1108	RD100E	DIODE	1	
D1109, 10	ERA15-08	DIODE	2	
D1121	RN2ZLF-C4	DIODE	1	
D1122	21DQ04	DIODE	1	
D1123	ERA22-02	DIODE	1	
D1124	MA185	DIODE	1	
D1125	11EQS04	DIODE	1	
D1126	MA4043-L	DIODE	1	
D1127	1SS254	DIODE	1	
D1129	MA4039-M	DIODE	1	
⚠ F1101	VSF0231G16	FUSE	1	[SUPPLIED FROM MBV]
IC1101	TDA4605-3	IC	1	
⚠ IP1101	VSF0232E16	IC PROTECTOR	1	[SUPPLIED FROM MBV]
⚠ L1107	ELF18D221F	COIL 220UH	1	
⚠ L1108	ELF18D290A	COIL 29UH	1	
L1121, 22	VLQ0655K220	COIL 22UH	2	
L1123, 24	ELESE101KA	COIL 100UH	2	
LB1101	VLP0085	COIL	1	
LB1102	VLP0074	COIL	1	
LB1107	VLP0085	COIL	1	
⚠ P1101	VJS3306	AC INLET	1	
P1102	VJP3631A011W	CONNECTOR (MALE) 11P	1	
Q1101	STP3N60FI-M	TRANSISTOR	1	
Q1102	2SD1991A	TRANSISTOR	1	
⚠ Q1111	CNX82A5387	PHOTO COUPLER	1	[SUPPLIED FROM MBV]
QR1101	UN6114	TRANSISTOR-RESISTOR	1	
QR1103	UN4213	TRANSISTOR-RESISTOR	1	
R1103	ERG1SJ393	M. RESISTOR 1W 39K	1	
R1104	ERDS2TJ391	C. RESISTOR 1/4W 390	1	
R1107	ERDS2FJ184	C. RESISTOR 1/4W 180K	1	[SUPPLIED FROM MBV]
R1108	ERDS2FJ105	C. RESISTOR 1/4W 1000K	1	
R1109	ERDS2FJ221	C. RESISTOR 1/4W 220	1	
R1110	ERDS2FJ822	C. RESISTOR 1/4W 8.2K	1	
R1111	ERDS2FJ222	C. RESISTOR 1/4W 2.2K	1	
R1112	ERDS2FJ304	C. RESISTOR 1/4W 300K	1	
R1113	ERDS2FJ474	C. RESISTOR 1/4W 470K	1	
R1114	ERX12SJR75	M. RESISTOR 1/2W 0.75	1	
R1115	ERDS2FJ103	C. RESISTOR 1/4W 10K	1	
R1116	ERDS2FJ100	C. RESISTOR 1/4W 10	1	
R1117	ERDS2FJ472	C. RESISTOR 1/4W 4.7K	1	
R1118	ERG1SJ100	M. RESISTOR 1W 10	1	
R1122	ERG12AGM334	S. RESISTOR 1/2W 330K	1	
R1125	ERDS2TJ271	C. RESISTOR 1/4W 270	1	
R1128	ERDS2FJ332	C. RESISTOR 1/4W 3.3K	1	
R1129	ERDS2FJ123	C. RESISTOR 1/4W 12K	1	
R1133	ERDS2FJ474	C. RESISTOR 1/4W 470K	1	
R1135	ERDS2FJ274	C. RESISTOR 1/4W 270K	1	
⚠ T1101	VLT0892	TRANSFORMER	1	[SUPPLIED FROM MBV]
		MISCELLANEOUS		
⚠	EYF52BC	FUSE HOLDER	2	
	VSC4205	SHIELD COVER	1	
	VMP4717	AC PLATE	1	

Ref. No.	Part No.	Part Name & Description	Pcs	Remarks
	VHD0418	SCREW	1	
⚠	VMZ2212	CAPACITOR COVER	2	
⚠	VMZ2394	BARRIER	1	
■	————	CYLINDER STATOR C. B. A.		
		MISCELLANEOUS		
	HW-300A-CF	HALL IC	1	
	VJS3537B009G	CONNECTOR (FEMALE) 9P	1	
■	————	MOTOR C. B. A.		
		MISCELLANEOUS		
	VJP3316B002	CONNECTOR (MALE) 2P	1	

Ref. No.	Part No.	Part Name & Description	Pcs	Remarks

INTERNAL REFERENCE CODES	
NOTE : This chart is only for internal reference. Do not order any parts according to these codes.	
P. C. B.	**FILM CODE**
MAIN	HOAO00-06B97
LUMINANCE & CHROMINANCE	HOAO00-03D95
HIFI AUDIO	HOAO00-04664
INPUT/OUTPUT	HOAO00-03D96
TIMER SYUGO	HOAO00-0393A
TV DEMODULATOR	HOAO00-07801
DECODER(EG/EGH)	HOAO01-07784
NICAM DECODER(B/BL/EC)	HOAO00-07787
POWER	HOAO02-01763
HEAD AMP	HOAO00-05349
CYLINDER DRIVE	HOAO01-00V01
LOADING MOTOR	HOAO00-00S75

1293

Panasonic

MATSUSHITA ELECTRIC

Printed in German