SONY

MULTI CAMERA LIVE PRODUCER

MCX-500

MEMORY STICK™ HDMI AVCHD SD XC™

SERVICE MANUAL

1st Edition (Revised 1)

⚠ 警告

このマニュアルは，サービス専用です。
お客様が，このマニュアルに記載された設置や保守，点検，修理などを行うと感電や火災，人身事故につながることがあります。
危険をさけるため，サービストレーニングを受けた技術者のみご使用ください。

⚠ WARNING

This manual is intended for qualified service personnel only.
To reduce the risk of electric shock, fire or injury, do not perform any servicing other than that contained in the operating instructions unless you are qualified to do so. Refer all servicing to qualified service personnel.

⚠ WARNUNG

Die Anleitung ist nur für qualifiziertes Fachpersonal bestimmt.
Alle Wartungsarbeiten dürfen nur von qualifiziertem Fachpersonal ausgeführt werden. Um die Gefahr eines elektrischen Schlages, Feuergefahr und Verletzungen zu vermeiden, sind bei Wartungsarbeiten strikt die Angaben in der Anleitung zu befolgen. Andere als die angegeben Wartungsarbeiten dürfen nur von Personen ausgeführt werden, die eine spezielle Befähigung dazu besitzen.

⚠ AVERTISSEMENT

Ce manual est destiné uniquement aux personnes compétentes en charge de l’entretien. Afin de réduire les risques de décharge électrique, d’incendie ou de blessure n’effectuer que les réparations indiquées dans le mode d’emploi à moins d’être qualifié pour en effectuer d’autres. Pour toute réparation faire appel à une personne compétente uniquement.

警告

万一，異常が起きた際に，お客様が電源をきることができるように，設置の際には，機器近くの固定配線内に専用遮断装置を設けるか，機器使用中に，容易に抜き差しできるコンセントに電源プラグを接続してください。

WARNING
When installing the unit, incorporate a readily accessible disconnect device in the fixed wiring, or connect the power cord to a socket-outlet which must be provided near the unit and easily accessible, so that the user can turn off the power in case a fault should occur.

WARNUNG
Beim Einbau des Geräts ist daher im Festkabel ein leicht zugänglicher Unterbrecher einzufügen, oder das Netzka-bel muß mit einer in der Nähe des Geräts befindlichen, leicht zugänglichen Wandsteckdose verbunden werden, damit sich bei einer Funktionsstörung die Stromversor-gung zum Gerät jederzeit unterbrechen läßt.

安全のために，周辺機器を接続する際は，過大電圧を持つ可能性があるコネクターを以下のポートに接続しないでください。
：PC UI ネットワーク端子
：STREAMING ネットワーク端子
上記のポートについては本書の指示に従ってください。

For safety, do not connect the connector for peripheral device wiring that might have excessive voltage to the following ports.
: PC UI network connector
: STREAMING network connector
Follow the instructions for the above ports.

Table of Contents

Manual Structure

Purpose of this manual.....3
Related manuals.....3

1. Service Overview

1-1. Installation.....1-1
1-1-1. Installation Environment.....1-1
1-1-2. Power Supply.....1-1
1-1-3. External Dimensions.....1-2
1-1-4. Matching Connectors and Cables.....1-2
1-1-5. Input/Output Signals of Connectors.....1-3
1-2. Location of Main Parts.....1-5
1-2-1. Location of Boards.....1-5
1-3. Function of Onboard LED Indicators.....1-6
1-3-1. SY-1074 Board.....1-6
1-4. Circuit Description.....1-7
1-4-1. IF-1010 Board.....1-7
1-4-2. KY-1014 Board.....1-7
1-4-3. MU-1001 Board.....1-11
1-4-4. SY-1074 Board.....1-13
1-5. Firmware Update.....1-18
1-6. Circuit Protection Parts.....1-19
1-6-1. Replacing Fuses.....1-19
1-7. Service Tools.....1-20
1-8. Flexible Flat Cable and Fine-Wire Coaxial Cable.....1-21
1-8-1. Disconnecting/Connecting Flexible Flat Cable.....1-21
1-8-2. Disconnecting/Connecting Fine-Wire Coaxial Cable.....1-21
1-9. Removing/Installing Lithium Battery.....1-23
1-10. Non-reusable Parts.....1-24

2. Troubleshooting

2-1. Blinking or No Lighting of On-board LEDs.....2-1
2-2. The Unit Does Not Start Up Normally.....2-2

3. Replacement of Main Parts

3-1. Tightening Torque.....3-1
3-2. Top Panel Assembly.....3-2
3-3. KY-1014 Board.....3-4
3-4. VR-1002 Board.....3-5
3-5. LCD Assembly.....3-6
3-6. DC Fan.....3-8
3-7. IF-1010 Board.....3-10
3-8. MU-1001 Board.....3-12
3-9. SY-1074 Board.....3-14

3-10. JK-1017 Board (Front)……3-19
3-11. JK-1017 Board (Rear)…… 3-20

4. Error Message

4-1. Message List……4-1

5. Spare Parts

5-1. Note on Repair Parts…… 5-1
5-2. Exploded Views…… 5-2
Overall…… 5-2
Top Panel Assembly…… 5-3
Case Assembly-1……5-4
Case Assembly-2……5-5
5-3. Supplied Accessories …… 5-6

6. Diagrams

Overall…… 6-1
Frame Wiring…… 6-3

Revision History

Manual Structure

Purpose of this manual

This manual describes the maintenance and block service of this unit. The contents are written for system engineers and service engineers with special knowledge.

Related manuals

For this unit, the following manuals are prepared for engineers.

- Service Manual
  This manual describes the information for block service of this unit.
- Factory Service Manual
  This manual describes the information for component service of this unit. This manual is required to repair the mounted circuit board by replacing parts.

Section 1
Service Overview

1-1. Installation

1-1-1. Installation Environment

Operating temperature
0℃ to 40℃
Storage temperature
–20℃ to 60℃
Mass
Approx. 2.1 kg
Prohibited locations for installation

- Areas where the unit will be exposed to direct sunlight or intense light
- Dusty areas
- Areas subject to vibration
- Areas in a strong electric or magnetic field
- Areas near heat sources
- Areas subject to electrical noise
- Areas subject to static electricity

Ventilation of the unit
This unit is cooled by airflow made by a fan on the right side. The power supply or other parts may fail if the vents on both sides are blocked or the fan stops.
Keep 1U or more space from each side of the unit.

1-1-2. Power Supply

Specifications
MCX-500
Input voltage: DC 12 V
Power consumption: Approx. 23 W
Recommended AC adaptor
AC ADAPTOR: 1-493-042-12

Power Cord
To get a power cord, please contact your local Sony Sales Office/Service Center.
In China, use the power cord supplied with the unit for CN.

WARNING

- Use the approved Power Cord (2-core mains lead) / Appliance Connector / Plug that conforms to the safety regulations of each country if applicable.
- Use the Power Cord (2-core mains lead) / Appliance Connector / Plug conforming to the proper ratings (Voltage, Ampere).
- Never use any damaged power cord.

Recommended power cord
CORD SET, POWER-SUPPLY [for CEE]: 1-846-102-81
CORD SET, POWER-SUPPLY [for UC]: 1-846-101-22
CORD SET, POWER-SUPPLY [for India]: 1-848-142-32
CORD SET, POWER-SUPPLY [for CN]: 1-846-103-82

Note

The part numbers are subject to change without notice.

1-1-3. External Dimensions

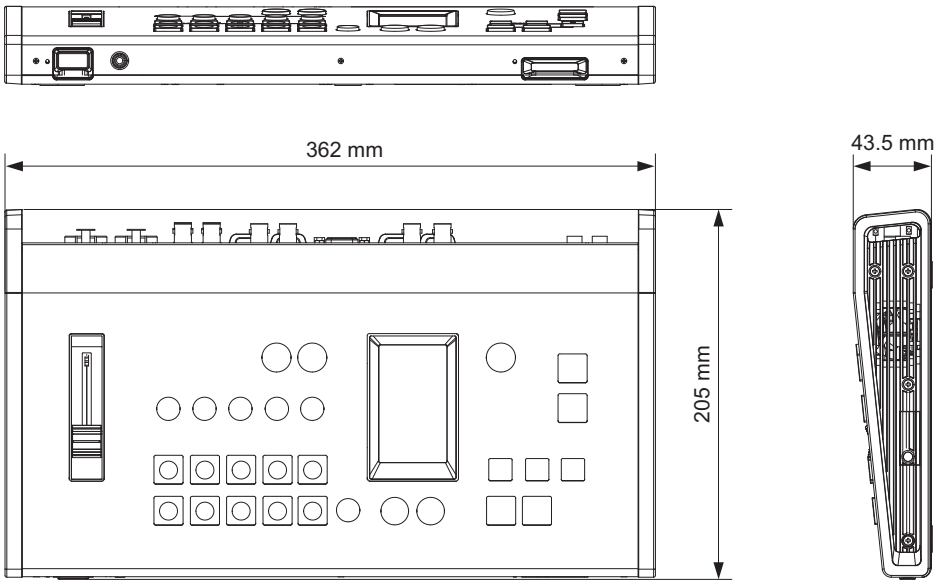

1-1-4. Matching Connectors and Cables

The connectors applicable to the terminal of the unit are as follows.

Panel indication	Matching connector
TALLY	D-Sub 9-pin (Female)
TITLE(RGB)	D-Sub 15-pin (Male)

1-1-5. Input/Output Signals of Connectors

Front

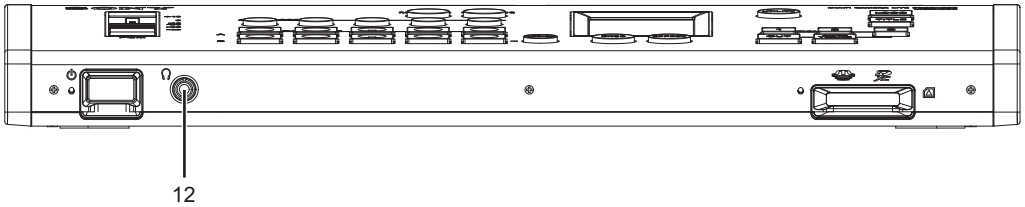

Rear

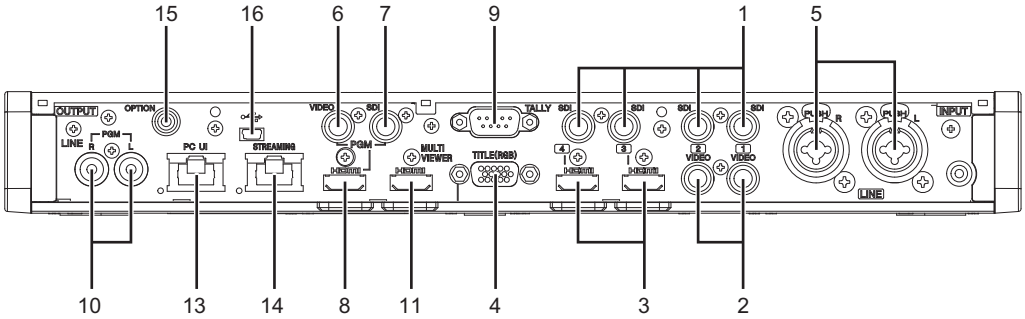

Input Connectors

1. SDI

BNC type (4), 75 Ω

3G SDI/HD/SD: SMPTE ST 292/259/424/425

2. VIDEO 1, 2

BNC type (2)

NTSC/PAL

1.0 Vp-p 75 Ω, sync negative

3. HDMI 3, 4

Type A (2)

720×480/576, 1280×720, 1920×1080

4. TITLE(RGB)

D-Sub Shrink 15-pin (1) (female)

RGB (1600×1200)

15-pin, Female

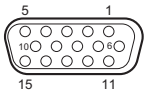

- External View -

No.	Signal	I/O	Specifications
1	R	IN	0.7 Vp-p
2	G	IN	0.7 Vp-p
3	B	IN	0.7 Vp-p
4	ID2	—	No connection
5	GND	—	GND
6	R_GND	—	GND

Continued

No.	Signal	I/O	Specifications
7	G_GND	—	GND
8	B_GND	—	GND
9	+5V	—	No connection
10	SYNC_GND	—	GND
11	ID0	—	No connection
12	ID1/SDA	OUT	0 to 5 V
13	HSYNC	IN	
14	VSYNC	IN	
15	ID3/SLC	OUT	0 to 5 V

5. LINE L, R

XLR/TRS combo type (CH-1, CH-2)

Output Connectors

6. PGM VIDEO

BNC type (1)

1.0 Vp-p 75 Ω, sync negative

7. PGM SDI

BNC type (1), 75 Ω

1.5 Gbps SMPTE ST 292

8. PGM HDMI

Type A (1)

720×480/576, 1280×720, 1920×1080

9. TALLY

D-Sub 9-pin (1) (male)

For the pin assignment, refer to the operating instructions.

10. PGM LINE

Phono jack (CH-1, CH-2)

11. MULTI VIEWER HDMI

Type A (1)

720×480/576, 1280×720, 1920×1080

12. 🎧 (Headphones connector)

Stereo mini jack (3.5 mm)

Communication connectors

13. PC UI

RJ-45 (1)

100BASE-TX, 1000BASE-T

14. STREAMING

RJ-45 (1)

100BASE-TX, 1000BASE-T

Others

15. OPTION

3.5 mm jack (1)

16. (USB connector)

5-pin, mini-B, USB2.0 Hi-Speed

1-2. Location of Main Parts

1-2-1. Location of Boards

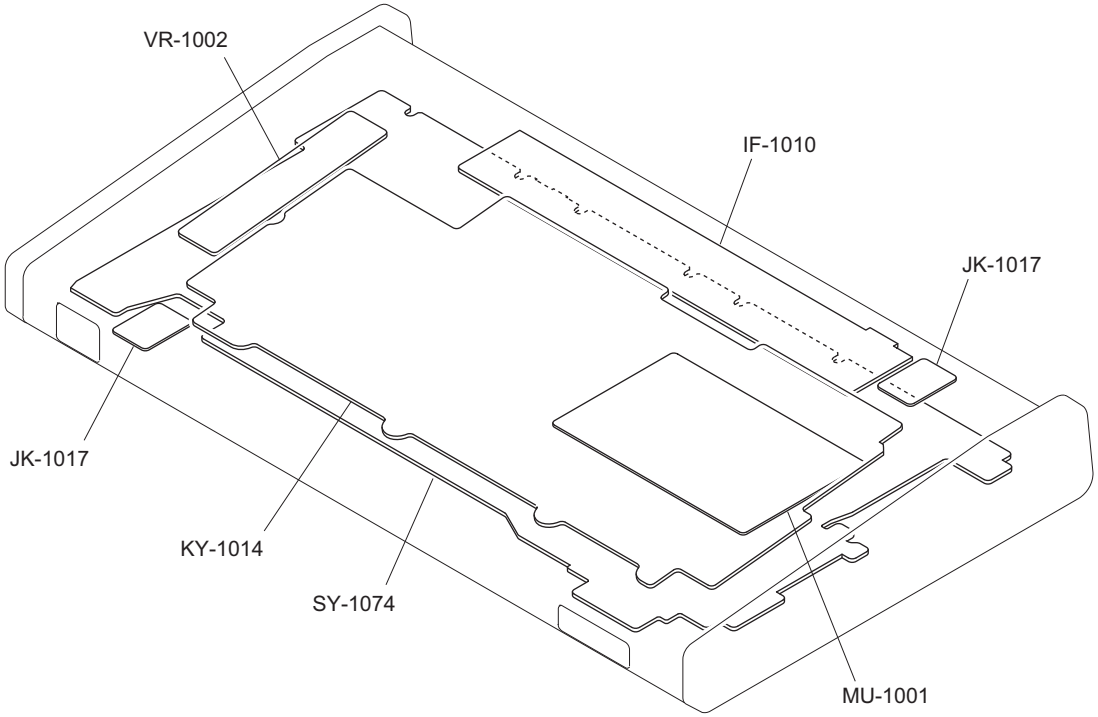

1-3. Function of Onboard LED Indicators

1-3-1. SY-1074 Board

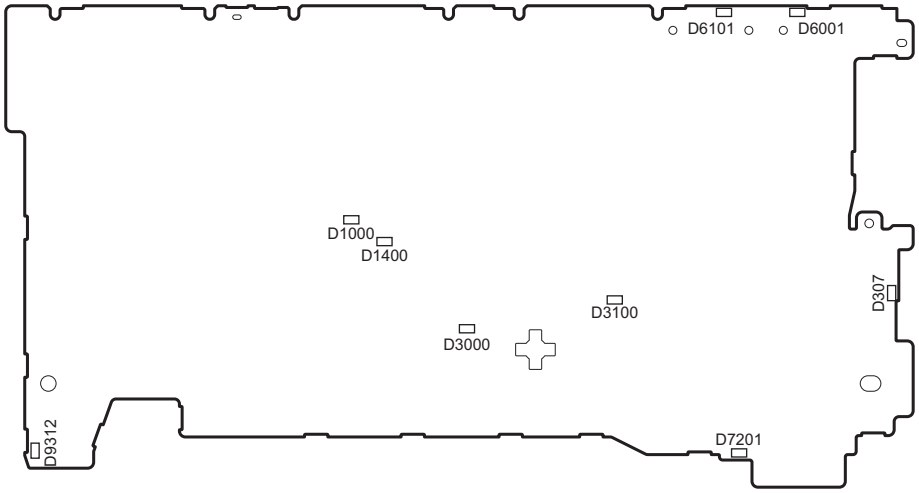

SY-1074 board (Side A)

Ref. No.	Color	Description
D307	Red	This LED lights in the firmware upgrade mode of IC6001 (MU-1001 board). If an error occurs in IC6001, this LED blinks long and short repeatedly.
D1000	Red	This LED lights after config done for IC1000. This LED blinks after IC1000 is released from reset.
D1400	Green	This LED lights after config done for IC1000.
D3000	Red	This LED lights after config done for IC3000. This LED blinks during lighting process of the LED on the control panel. This LED lights after the lighting process for LED on the control panel is completed.
D3100	Green	This LED lights after config done for IC3100.
D6001	Green	This LED lights when an LAN cable is connected to the LAN connector (J100) and blinks when communication starts.
D6101	Green	This LED lights when an LAN cable is connected to the LAN connector (J100) and blinks when communication starts.
D7201	Red	This LED lights during accessing to an SD card or Memory Stick. This LED lights in the firmware upgrade mode of IC6000 (MU-1001 board). If an error occurs in IC6000, this LED blinks long and short repeatedly.
D9312	Red or Green	This LED lights in red or green when the unit receives the power from AC adaptor. Red: The unit is turned off. Green: The unit is turned on.

1-4. Circuit Description

1-4-1. IF-1010 Board

This board has the following video signal input/output functions.

- HD/SDI SDI signal input/output
- Composite signal output
- TALLY signal output
- Data transmission with USB communication

This board contains the following connectors.

- 4-channel SDI input connectors (J1001 and J1002) (input for 2 channels per connector)
- Single-channel SDI output connector (J1003)
- Single-channel VIDEO output connector (J1004)
- TALLY signal connector (CN1003)
- USB connector (CN1002)

SDI input

HD/SD SDI signals input from the SDI connectors (J1001 and J1002) are equalized by the equalizer ICs (IC1102, IC1101, IC1105, and IC1106).
Equalized HD/SD SDI signals are sent through the fine-wire coaxial connector (CN1001) to the SY-1074 board.
Power voltage 3.3 V generated by the regulator IC (IC9008) on the SY-1074 board is supplied to the equalizer IC s (IC1102, IC1101, IC1105, and IC1106) through the connectors (CN7001 and CN1001).

SDI output

HD/SD SDI differential signals generated by IC3000 on the SY-1074 board are converted to SDI signals by the cable driver (IC1103). Converted SDI signals are output from the SDI output connector (J1003).
Power voltage 3.3 V generated by the regulator IC (IC9008) on the SY-1074 board is supplied to the cable driver (IC1103) through the connectors (CN7001 and CN1001).

Composite output

- Composite signals that are output from the CPU (IC6000) on the MU-1001 board are output from the VIDEO output connector (J1004) on the IF-1010 board through the SY-1074 board.

Tally signal

The tally signal that is output from the CPU (IC6000) on the MU-1001 board is output from the TALLY signal connector (CN1003) on the IF-1010 board through the SY-1074 board.

USB

Bidirectional communication is performed from the CPU (IC6000) on the MU-1001 board through the SY-1074 board.

1-4-2. KY-1014 Board

Switches on the operation panel and LED ON/OFF status

LEDs are mounted just beside respective switches on the operation panel.
When a switch is pressed, a voltage unique to each switch is generated. The CPU detects the voltage and determines which switch was pressed.
The CPU turns on the LEDs beside each switch according to the unit status.

Panel display		Switch	LED	Point	Volt-age	LED		Conditions	
						Color	State	Mode	Operation
VIDEO INPUT SELECT A	1	S2102	D2200	R2032 (This board) R1226 (MU-1001 board)	Approx. 0.35 V	Red	Lights	—	When any switch is pressed until it is released
	2	S2105	D2201		Approx. 0.7 V	Red	Lights	—	
	3	S2110	D2202		Approx. 1.08 V	Red	Lights	—	
	4	S2113	D2215		Approx. 1.55 V	Red	Lights	—	
	INT	S2117	D2214		Approx. 2.07 V	Red	Lights	—	

Continued

Panel display		Switch	LED	Point	Volt-age	LED		Conditions	
						Color	State	Mode	Operation
VIDEO INPUT SELECT B	1	S2101	D2203	R2034 (This board) R1227 (MU-1001 board)	Approx. 0.35 V	Orange	Lights	BKGD	When this switch is pressed until it is released
						Green	Lights	EFFECT	When this switch is pressed until it is released
						Red	Lights	EFFECT	When this switch is pressed and then the CUT or AUTO TRANS switch is pressed
	2	S2104	D2204		Approx. 0.7 V	Orange	Lights	BKGD	When this switch is pressed until it is released
						Green	Lights	EFFECT	When this switch is pressed until it is released
						Red	Lights	EFFECT	When this switch is pressed and then the CUT or AUTO TRANS switch is pressed
	3	S2109	D2205		Approx. 1.08 V	Orange	Lights	BKGD	When this switch is pressed until it is released
						Green	Lights	EFFECT	When this switch is pressed until it is released
						Red	Lights	EFFECT	When this switch is pressed and then the CUT or AUTO TRANS switch is pressed
	4	S2112	D2209		Approx. 1.55 V	Orange	Lights	BKGD	When this switch is pressed until it is released
						Green	Lights	EFFECT	When this switch is pressed until it is released
						Red	Lights	EFFECT	When this switch is pressed and then the CUT or AUTO TRANS switch is pressed
	INT	S2116	D2208		Approx. 2.07 V	Orange	Lights	BKGD	When this switch is pressed until it is released
						Green	Lights	EFFECT	When this switch is pressed until it is released
						Red	Lights	EFFECT	When this switch is pressed and then the CUT or AUTO TRANS switch is pressed

Continued

Panel display		Switch	LED	Point	Volt-age	LED		Conditions	
						Color	State	Mode	Operation
AUDIO AC-CESS	1	S2103	D2213	R2038 (This board) R1228 (MU-1001 board)	Approx. 0.35 V	Orange	Lights	—	When this switch is pressed, a menu appears in the menu opera-tion field. When displayed “CH ON” is touched, the LED lights.
	2	S2107	D2206		Approx. 0.7 V	Orange	Lights	—	
	3	S2108	D2207		Approx. 1.08 V	Orange	Lights	—	
	4	S2111	D2212		Approx. 1.55 V	Orange	Lights	—	
	LINE	S2115	D2211		Approx. 2.07 V	Orange	Lights	—	
CUT		S2119	D2223	R2036 (This board) R1225 (MU-1001 board)	Approx. 0.35 V	Orange	Lights-up for a mo-ment	—	When this switch is pressed
AUTO TRANS1		S2121	D2216		Approx. 0.7 V	Orange	Lights	—	When this switch is pressed until the transition is completed
TRANSITION RATE	1	S2123	D2217		Approx. 1.08 V	Orange	Lights	BKGD	When any switch is pressed until it is released
						Green	Lights	EFFECT	
	2	S2125	D2218		Approx. 1.55 V	Orange	Lights	BKGD	
						Green	Lights	EFFECT	
	3	S2127	D2227		Approx. 2.07 V	Orange	Lights	BKGD	
						Green	Lights	EFFECT	
ASSIGN		S2120	D2220	R2034 (This board) R1230 (MU-1001 board)	Approx. 0.35 V	Orange	Lights	—	When this switch is pressed until it is released
BKGD		S2124	D2221		Approx. 1.08 V	Orange	Lights	—	When this switch is pressed until it is released
EFFECT		S2128	D2224		Approx. 2.07 V	Green	Lights	—	When this switch is pressed until it is released
UTIL		S2118	D2222	R2033 (This board) R1231 (MU-1001 board)	Approx. 0.35 V	Orange	Lights	—	When this switch is pressed until it is released
LOGO		S2122	D2225		Approx. 1.08 V	—	Off	—	Not used in ver-sion 1.0
TITLE		S2126	D2226		Approx. 2.07 V	Orange	Lights	—	When this switch is pressed until it is released
RECORDING		S2106	D2210	R2032 (This board) R1232 (MU-1001 board)	Approx. 0.7 V	Red	Lights	—	When this switch is pressed until it is released
STREAMING		S2114	D2219		Approx. 2.07 V	Blue	Lights	—	When this switch is pressed until it is released

- AUDIO Volume
  When moving the slider (RV2401 on the VR-1002 board), approx. 0 to 3.3V voltage is generated.

LED drivers

Six LED drivers control color and brightness of LEDs (D2200 to D2227) on the operation panel.
The LED drivers are connected to SIO (IC6000) on the MU-1001 board and are controlled through serial communication.
D2200 to D2227 (red, green, and blue LEDs) are connected to the following ICs.

- IC2201 :
  D2200 (red)
  D2203, D2204, D2205, D2208, D2209 (red, green, and blue)
- IC2202 :
  D2200 (green and blue)
  D2213 (red and green)
  D2201, D2202, D2214, D2215 (red, green, and blue)
- IC2203 :
  D2213 (blue)
  D2206, D2207, D2210, D2211, D2212 (red, green, and blue)
- IC2204 :
  D2216 (red)
  D2219, D2220, D2221, D2223, D2224 (red, green, and blue)
- IC2205 :
  D2216 (Green and Blue)
  D2225 (Red and Green)
  D2217, D2218, D2226, D2227 (red, green, and blue)
- IC2206 :
  D2225 (Blue)
  D2222 (Red, Green and Blue)

Power voltage 3.3 V generated by IC9008 on the SY-1074 board is supplied to IC2201 to IC2206.
The five-channel power voltage 3.3 V generated by IC002 on the MU-1001 board is supplied to the LEDs (D2200 to D2227) on the control panel.

1-4-3. MU-1001 Board

System control block

The system control block contains a 32-bit RISC CPU (IC6000) having an ARM core and also contains a NAND flash 8Gb and DDR 8Gb as a package-on-package (PoP) device.
This block is equipped with the following peripheral interface functions.

- PCIe
- GCS3 (Only Rx is used in MCX-500.)
- Audio I2S
- Composite output
- HDMI Tx (8-bit output)
- LCD interface (RGB 8 bits)
- USB I/F
- UART
- SIO (5 channels)
- I2C (1 channel)
- SD card interface
- Memory Stick interface
- AD ports (24 ports)
  Ten ports are used in MCX-500.

This block operates with the 12MHz clock frequency of X1001.

System controller and main peripheral functions

- IC6000 is connected to IC6900 on the SY-1074 board with the PCIe.
- IC6000 receives video data from IC3000 on the SY-1074 board with the GCS3 signal, and then outputs composite data and records it in an SD memory card or Memory Stick.
- IC6000 performs communication with the remote controller RM-30BP through IC7001 with the UART.

- Each channel of SIO is connected to the following devices.
  - SIO0: IC2001 (SY-1074 board)
  - SIO1: LCD panel (KY-1014 board) and IC8204 (SY-1074 board)
  - SIO2: IC6001/ IC1000 (SY-1074 board) and LED driver IC2201 to IC2206 (KY-1014 board)
  - SIO3: IC201 (MU-1001 board)
  - SIO4: IC3101 (SY-1074 board)
- I2C is connected to the following devices.
  - SY-1074 board: IC402, IC504, IC603, IC653, IC902, and IC4004
  - KY-1014 board: Touch panel
- The voltage value when the switch connected to an AD port is turned on is used to detect which switch has been turned on.
- Fan speed control
- USB
  IC6000 is connected to the USB mini B connector (CN1002).
  Connection to a PC from CN1002 makes it possible to edit images by using the PC application (Play Memories Home)
  Software upgrade can be made through the USB interface.

PGM HDMI Tx, Streaming

The same part is used for IC6001 and IC6000.
IC6001 receives the GCS3 signal from IC3000 on the SY-1074 board and then outputs the HDMI signal.
Furthermore, IC6001 is connected to IC6930 on the SY-1074 board with the PCIe to execute the streaming function.

- USB
  The USB connector is connected to the USB mini B connector (CN302) on the SY-1074 board.
  The USB connector is connected to a PC for software upgrade.

Power control microcomputer

The microcomputer (IC201) has a clock function to control the power ICs.
When power is connected to the DC IN jack and the power switch is turned on, power is supplied from IC201 to the power ICs (IC001 and IC002) and voltage value information of each power channel is sent.
SIO communication is performed between the microcomputer (IC201) and the power ICs (IC001 and IC002).
When the reset button is pressed, the microcomputer (IC201) resets IC6000 and IC6001 and also resets the entire unit.

Power IC

IC001 is an LDO power IC.
IC001 inputs a power voltage of 8V and outputs voltages 1.0 V, 5 V, and 3.3 V, and also charges the rechargeable backup battery (BH9001) on the SY-1074 board.
IC001 generate a voltage of 3.0 V from the rechargeable backup battery when no battery AC adaptor is connected. This voltage is supplied to IC201 as a backup power voltage to retain clock information.
IC002 is a 6-channel output DC/DC converter.
IC002 inputs a power voltage of 8V and outputs the following voltages for each channel.

- CH1: 1.0 V
- CH2: 1.2 V
- CH3: 1.8 V
- CH4: 1.5 V
- CH5: 3.3 V
- CH6: 5.0 V

The voltage 12 V supplied from the AC adaptor is down-converted to 8 V in IC9306 on the SY-1074 board to be supplied to IC001 and IC002.

Temperature sensor

IC1201 is a temperature sensor.
This temperature sensor connected to IC6000 through the I2C bus sends temperature information regularly.

Power to this temperature sensor is supplied from CH5 (3.3 V) of IC002.

1-4-4. SY-1074 Board

This board has the following functions to input and output audio and video signals.

- HD/SDI signal input/output
- Video signal input/output
- HDMI signal input/output
- Ethernet signal transmission
- RGB signal input
- TALLY signal output
- Line signal input/output
- Headphone signal output
- Option signal transmission
- Clock supply

This board contains the following connectors.

- HDMI input connectors (CN100 and CN101)
- HDMI output connectors (CN102 and CN103)
- VIDEO input connector (J303)
- LAN connectors (J100 and J102)
- RGB connector (CN304)
- Line input connectors (L ch: CN8104, R ch: CN8103)
- Line output connector (J7001)

Signal input block

- HD/SD SDI signals from the IF-1010 board are sent to IC1000.
- Two analog composite signals of the SY-1074 board are decoded by the composite decoder ICs (IC603 and IC653), and are then sent to IC1000. The digital format of the analog composite signals is ITU-R BT.656.
- Input HDMI signals are converted to ITU-R BT.656 data by the HDMI Rx (IC402 and IC504), and the converted data is sent to IC1000.
- Input analog RGB signals are converted to digital signals by IC701, and the digital signals are sent to IC3000. Digital signals are 10-bit RGB video signals.
  RGB signals of approx. 0.6 Vp-p of analog input are set to be 100%Y.
- Ethernet communication data sent from the LAN connector is converted to a differential signal (PCIe) by the Ethernet PHY (IC6900 and IC6930), and the differential signal is sent to the MU-1001 board.

Signal output block

- HD/SD SDI signals are sent from IC3000 through the fine-wire coaxial connector (CN1001) to the IF-1010 board.
- Video signals (conforming to CEA-861D) are sent from IC2001 to IC902 with the serial bus, and are converted to HDMI signals in IC902. Then the converted HDMI signals are output.
- HDMI signals are input from the MU-1001 board to the SY-1074 board through the B to B connector (CN7101) and are output from the HDMI output connector.
  In the same way, analog composite signals are input from the MU-1001 board to the SY-1074 board through the B to B connector and are sent to the IF-1010 board.
- This block sends the TALLY signal (that is input from the MU-1001 board through the 28-pin flat cable CN3002) to the IF-1010 board.
- Differential signals that are input from the MU-1001 board through the B to B connector are converted to Ethernet signals by the Ethernet PHY (IC6900 and IC6930), and the Ethernet signals are output from the LAN connector.
- The serial OPTION signal is sent from the MU-1001 board through the 28-pin flat cable (CN3008), and is then sent through IC7001 and the 8-pin flat cable (CN7004) to the JK-1017 board.

Clock supply

- The 28.636363 MHz clock signal generated by X400 is supplied to IC402, IC504, IC603, and IC653.
- The 66 MHz clock signal generated by X2200 is supplied to IC2001.
- The 200 MHz differential clock signal generated by X3101 is supplied to IC3000.
- The 148.5 MHz clock signal generated by X3302 is supplied to IC1000, IC3000, and IC3301.
  The 148.5 MHz clock signal converted to a differential signal from IC3301 is input to IC3000.
- The 25MHz clock signal is output from X4101, X6900, and X6930.
- Clock signals are input to IC4102 from X4101, to IC6900 from X6900, and to IC6930 from X6930.

Flow of audio signals

- LINE input flow
  - Balanced audio signals are input to CN8103 and CN8104.
  - The LINE signal that is input to CN8103 and CN8104 is attenuated by 26 dB in IC8103, and is then input to IC8204.
  - The digital LINE signal that is input to CN8103 and CN8104 is sent through IC8204 and is then converted to an analog signal by the A/D converter IC8203. Then the analog signal is input to IC1000.
- Flow of SDI and HDMI audio embedded signals
  - SDI signals are converted to digital differential signals of ICIC1101, IC1102, IC1105, and IC1106 on the IF-1010 board, and the digital differential signals are input to IC1000.
    The SDI Rx circuit in IC1000 separates signals into video signals and digital audio signals.
  - When HDMI signals are input to the HDMI Rx (IC402) and HDMI Rx (IC504), they are separated into video signal YCbCr20bit and Audio I2S signal.
    Both video signals and audio signals are input to IC1000.
- IC1000 functions for audio signals
  - Sampling rate converter: Synchronizes asynchronous digital audio signals.
  - Cross point: Switches audio signals.
  - Delay: Delays audio signal phase to synchronize the video phase with the audio phase.
  - Test tone: Generates a reference signal 1kHz -20dBFs (60i) or -18dBFs (50i).

  After these processes are performed in IC1000, processed signals are sent in the I2S format to IC6000 and IC6001 on the MU-1001 board and to IC8206 on the SY-1074 board.
  Data sent to IC6000 is sent to IC8205 on the SY-1074 board as audio data to be recorded in an SD card or Memory Stick and as LINE OUT I2S data. Audio signals are output from the LINE output connector (J7001) through IC8204.
  Data sent to IC6001 is output from the HDMI output connector (CN103) PGM OUT as HDMI signals. Audio streaming data is output from the STREAMING LAN connector (J102).
  Data sent to IC8206 is output through IC8204 to CN7003 as audio data.

FPGA, IP00C733, and clock generator

- IC1000 (FPGA)

  IC1000 performs the following signal processing.

  - Video signal reception

    IC1000 receives ITU-R BT.656-format signals from the composite decoder ICs (IC603 and IC653).

    IC1000 receives ITU-R BT.656-format signals from the HDMI Rx (IC402 and IC504).

    IC1000 decodes the EQ-processed SDI signals received from the SDI-EQ ICs (IC1102, IC1101, IC1105, and IC1106) on the IF-1010 board.
  - Video signal selection

    IC1000 makes the following selections for the video signals shown above.

    1. IC1000 selects composite signals or SDI signals for each channel from decoded composite signals that are input from the VIDEO 1/2 connector (J303) and decoded SDI signals that are input from the SDI 1 to SDI 4 connectors (J1001 and J1002).
    2. IC1000 selects HDMI signals or SDI signals for each channel from decoded signals that are input from the HDMI 3 connector (CN100) and the HDMI 4 connector (CN101) and decoded SDI signals that are input from the SDI 1 to SDI 4 connectors (J1001 and J1002).

    Furthermore, IC1000 switches selected four signals and sends these signals for three channels to IC2001.

    IC1000 switches eight input signals to three output signals. Thus IC1000 performs a part of video signal switching function that is a basic operation of this unit.
  - Generating a multi-view child screen

    IC1000 generates a multi-view child screen from the selected four input images and sends it to IC3000.
  - Control from the CPU

    The CPU (IC6000) on the MU-1001 board controls IC1000 with SIO communication.
  - Configuration

    IC1000 receives configuration data from the flash ROM (IC1500) during startup. Configuration data is sent from IC600 when the software is upgraded.

    Upon completion of successful configuration, D1400 lights green and D1000 lights red.

    When IC1000 is released from reset by IC6000 on the MU-1001 board, D1000 blinks red.
- IC2001 (IP00C733)

  IC2001 performs the following signal processing.

  - IC2001 is connected to the DDR2-SDRAM (IC2301, IC2302, IC2401, and IC2402) for signal processing.
  - IC2001 has inputs and outputs for four channels, but three input/output channels (CH1, CH2, and CH3) are used for signal processing of material images.

    The one input/output channel (CH4) is used for multi-view image size conversion.
  - IC2001 converts the input image size to an image size conforming to the system format for scaling of material images.
  - IC2001 synchronizes input video signals by using the frame synchronization function.
  - IC2001 switches PGM, NEXT, and PinP video signals.
  - IC2001 is equipped with a Wipe function and a Mix function.
  - IC2001 converts the multi-view image size and sends converted images to the HDMI Rx IC (IC902).
  - IC2001 can display multi-view images on the OSD.
  - SIO communication is performed between IC2001 and the CPU (IC6000) on the MU-1001 board.

- IC3000 (FPGA)
  IC3000 performs the following signal processing.
  - IC3000 is connected to the DDR3-SDRAM (IC3401 and IC3402) for signal processing.
  - IC3000 generates a 27 [MHz] clock signal from the System Clock 12 [MHz] signal, and then sends the 27 [MHz] clock signal to the clock generator (IC4004).
  - IC3000 controls the RGB ADC Chip IC (IC701).
    Specifically, IC3000 stores register settings sent from the CPU in IC3000 and controls IC701 through the dedicated I2C bus.
  - IC3000 converts RGB signals sent from IC701 to YCbCr signals. The YCbCr signals are finally superimposed by the DSK as a title image.
  - IC3000 superimposes PinP images.
  - IC3000 synthesizes keys (keyer processing).
  - IC3000 sends SDI signals to the cable driver (IC1103) on the IF-1010 board. The SDI signals pass through IC1103, and are then output as PGM signals.
  - IC3000 generates a GCS3 signal to the PGM signal and sends the GCS3 signal to the CPU (IC6000 and IC6001) on the MU-1001 board.
  - IC3000 generates a multi-view screen sent from IC1000 and sends it to IC2001.
  - IC3000 controls the LEDs on the operation panel at power-on to indicate the power-on process.
  - IC3000 controls clock (selects a clock signal according to image size and sends it to IC2001) according to control from the CPU.
  - IC3000 is controlled by the CPU (IC6000) on the MU-1001 board through SIO communication.
  - IC3000 receives configuration data from the flash ROM (IC3101) during startup.
    Configuration data is sent from IC600 when the software is upgraded.
  - Upon completion of successful configuration, D3100 lights green and D3000 lights red.
  - When the three-color LEDs on the operation panel are lit by IC3000, the D3000 LED blinks red. When the lighting processing has been completed, D3000 lights.
- IC4004
  - IC4004 has a clock generator function.
  - IC4004 inputs the 27 [MHz] clock signal generated by IC3000, and then re-synthesizes the 27 [MHz] clock signal. IC4004 also generates clock signals 148.35 [MHz] (depending on system format), 148.5 [MHz], and 24.576 [MHz] from the internally re-synthesized 27 [MHz] clock signal.
  - IC4004 is controlled from the CPU (IC6000) with the I2C bus.
- Power system of SY-1074 board
  When 12 V is supplied from the AC adaptor, 8 V is output from IC9306 and is then supplied to IC001 and IC002 on the MU-1001 board.
  A power voltage of 12V is also supplied to the DC/DC converters (IC9001, IC9002, IC9003, IC9004, IC9005, IC9006, IC9007, and IC9008).
  Each DC/DC converter is activated by a trigger of the following signals.
  - IC9001/IC9007: When 1.5 V of IC002 (MU-1001 board) is activated, 1.8 V is output.
  - IC9002: When 5 V of IC002 (MU-1001 board) is activated, 2.0 V is output.
  - IC9003: When 1.0 V of IC002 (MU-1001 board) is activated, 1.0 V is output.
  - IC9004: When 1.0 V of IC002 (MU-1001 board) is activated, 1.2 V is output.
  - IC9005/IC9008: When 3.3 V of IC002 (MU-1001 board) is activated, 3.3 V is output.
  - IC9006: When 3.3 V of IC002 (MU-1001 board) is activated, 5.0 V is output.

LEDs

- Power LED (D9312)
  This LED lights green when power is turned on, and lights red when power is turned off and an AC adaptor is connected. This LED does not light when no AC adaptor is connected regardless of power on/off status.
- ETHER LEDs (D6001 and D6101)
  These LEDs light when an LAN cable is connected to the unit and blink when communication starts.
  The five-channel power voltage 3.3 V generated by IC002 on the MU-1001 board is supplied to D6001 and D6101.

- Media access LED (D7201)
  This LED lights when an access is made to an SD card or Memory Stick.
  This LED lights in the firmware upgrade mode of IC6000 on the MU-1001 board.
  If an error occurs in IC6000, this LED blinks long and short repeatedly.
  The five-channel power voltage 3.3 V generated by IC002 on the MU-1001 board is supplied to D7201.
- Firmware upgrade LED (D307)
  This LED lights in the firmware upgrade mode of IC6001 on the MU-1001 board.
  If an error occurs in IC6001, this LED blinks long and short repeatedly.
  The five-channel power voltage 3.3 V generated by IC002 on the MU-1001 board is supplied to D307.

1-5. Firmware Update

For firmware updates, contact your local sales Office/Service Center.

1-6. Circuit Protection Parts

1-6-1. Replacing Fuses

WARNING

Fuses are essential parts for safe operation. Be sure to use the parts specified in this manual. Replacing a fuse with an unspecified one may cause fire or electric shock.

In the case of the fuse blow, turn off the main power of the unit once, inspect inside of the unit, and then remove the cause of the overcurrent. After that, replace the defective parts.

Board Name	Ref. No.	Part Name and Rating	Part No.
KY-1010	F2001	FUSE, MICRO (1608) 0.25 A/50 V	⚠1-576-872-31
MU-1001	F001	FUSE, MICRO (1608) 1.4 A/32 V	⚠1-576-406-31
	F002	FUSE, MICRO (1608) 1.4 A/32 V	⚠1-576-406-31
	F003	FUSE, MICRO (1608) 1.4 A/32 V	⚠1-576-406-31
	F004	FUSE, MICRO (1608) 1.4 A/32 V	⚠1-576-406-31
	F3000	FUSE, MICRO (1608) 1.4 A/32 V	⚠1-576-406-31
	F3003	FUSE, MICRO (1608) 1.4 A/32 V	⚠1-576-406-31
	F3004	FUSE, MICRO (1608) 1.4 A/32 V	⚠1-576-406-31
SY-1074	F7001	FUSE, MICRO (1608) 1.4 A/32 V	⚠1-576-406-31
	F7002	FUSE, MICRO (1608) 1.4 A/32 V	⚠1-576-406-31
	F7100	FUSE, MICRO (1608) 2.5 A/24 V	⚠1-576-844-31
	F8001	FUSE, MICRO (1608) 1.4 A/32 V	⚠1-576-406-31
	F9000	FUSE, MICRO (1608) 1.4 A/32 V	⚠1-576-406-31
	F9301	FUSE, MICRO (1608) 5 A/24 V	⚠1-576-933-31
	F9302	FUSE, MICRO (1608) 1.4 A/32 V	⚠1-576-406-31
	F9303	FUSE, MICRO (1608) 3.15 A/24 V	⚠1-576-850-31
	F9304	FUSE, MICRO (1608) 3.15 A/24 V	⚠1-576-850-31
	F9305	FUSE, MICRO (1608) 3.15 A/24 V	⚠1-576-850-31
	F9306	FUSE, MICRO (1608) 3.15 A/24 V	⚠1-576-850-31

1-7. Service Tools

Part No.	Name	Use
J-6252-540-B	Torque screwdriver bit set (2, 2.6, 3 mm cross slot bits and hexagonal bits of size 2, 2.5, 3 mm)	Tightening hexagon socket bolts (size: 2 mm and 3 mm)
J-6325-110-A	Torque screwdriver bit (M1.4)	Tightening screws
J-6325-380-A	Torque screwdriver bit (M2), (M2.6)	
J-6325-400-A	Torque screwdriver (3 kg•cm) (0.3 N•m)	
J-6252-510-A	Torque screwdriver (6 kg•cm) (0.6 N•m)	
J-6252-520-A	Torque screwdriver (12 kg•cm) (1.2 N•m)	
Commercially available	Jack nut driver 3.5mm dia or equivalent parts.	For 3.5 mm audio jack

1-8. Flexible Flat Cable and Fine-Wire Coaxial Cable

1-8-1. Disconnecting/Connecting Flexible Flat Cable

Note

- Be very careful not to fold flexible flat cables. Life of flexible flat cable will be significantly shortened if it is folded.
- Each flexible flat cable has conductive side and insulated side. If the flexible flat cable is connected in the wrong orientation of the conductive side and the insulated side, the circuit will not function.
- Check that the conductive side of the flexible flat cable is not contaminated.
- Do not open the locking tab excessively at an angle above the value shown in the figure to prevent the connector from being damaged.
- Securely insert the flexible flat cable into the deep end of the connector.

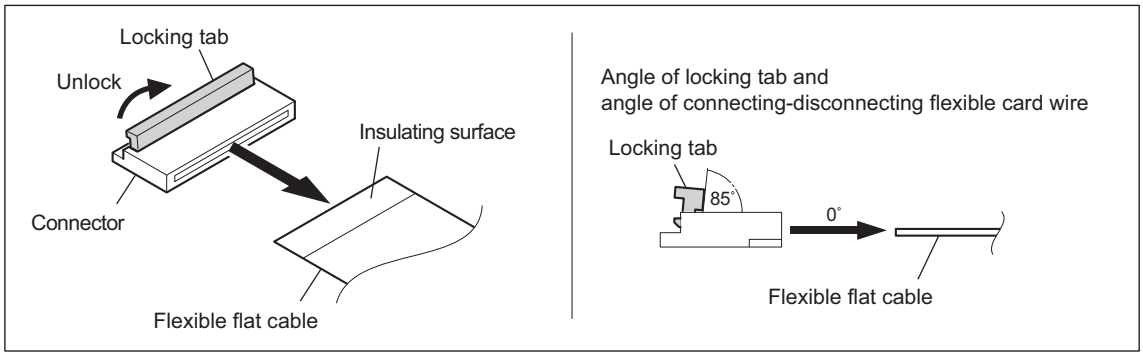

Disconnection

1. Unlock the connector.
2. Pull out the cable.

Connection

1. Unlock the connector.
2. Insert the cable into the connector.
3. Lock the connector.

1-8-2. Disconnecting/Connecting Fine-Wire Coaxial Cable

Note

- Be very careful when handling the fine-wire coaxial cable so that fine wires are not disconnected.
- When disconnecting the fine-wire coaxial cable, be sure to hold the connector. Do not attempt to pull the cable.
- Check that the contact surface of the fine-wire coaxial cable connector is not contaminated.

Disconnecting

1. Hold both sides of the fine-wire coaxial cable connector, and pull the connector straight to disconnect it.

Connecting

1. Insert the connector straight matching the polarity marks.

Note

Inserting the connector at an angle so may damage it.
Insert the connector firmly as far as it will go.

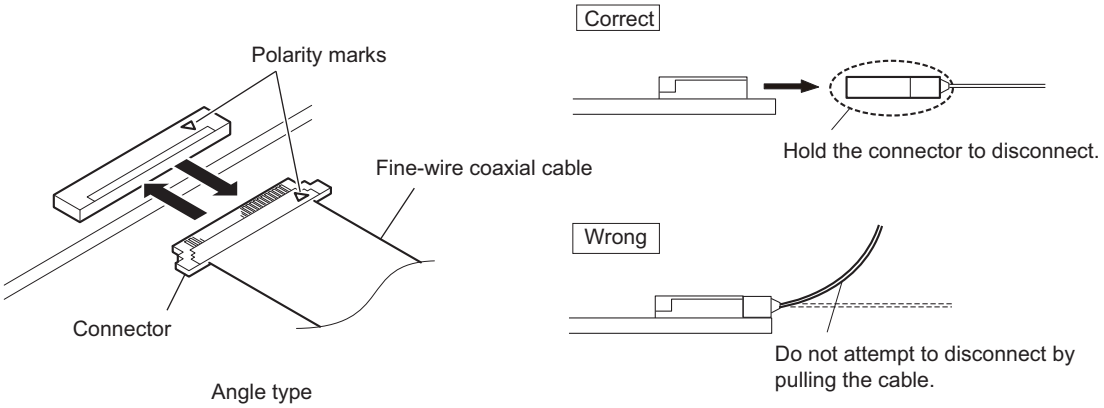

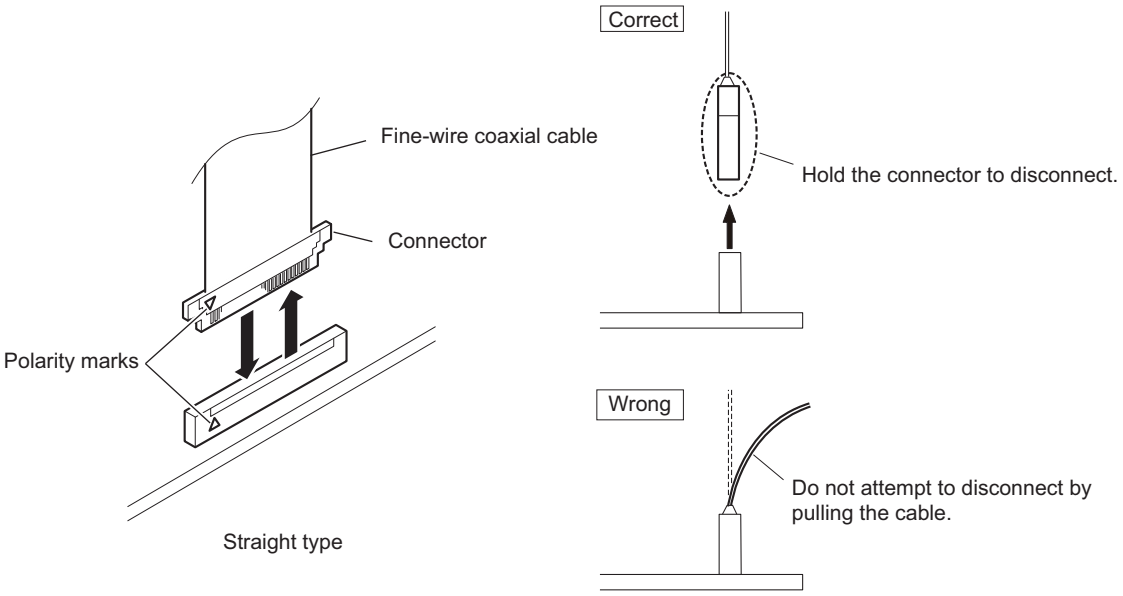

1-9. Removing/Installing Lithium Battery

Removal

1. Insert a thin rod (such as precision screwdriver) into the groove of the socket.
2. Turn the rod to the outside of the socket (arrow A) to lift one side of the lithium battery.

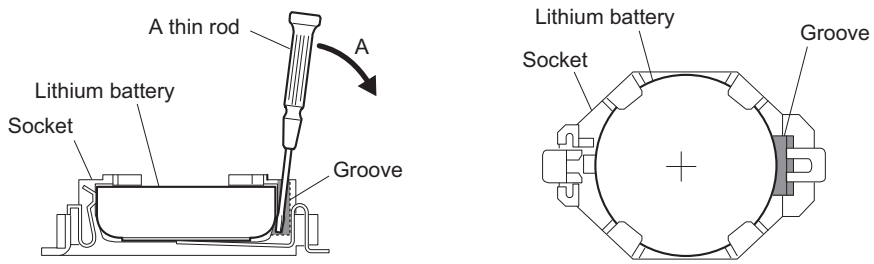

3. Remove the lithium battery (arrow B).

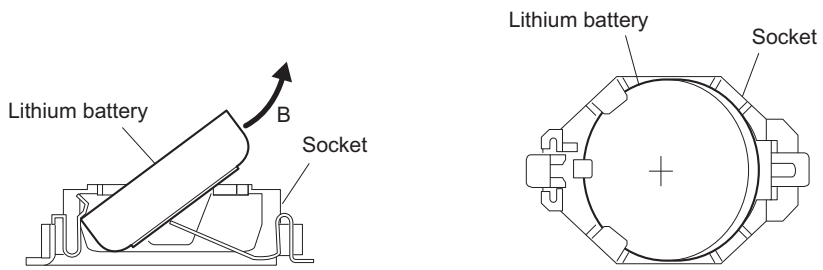

Installation

1. Insert the lithium battery (arrow A) with a tool such as insulated tweezers.
2. Hook the lithium battery to the two hooks on the socket.

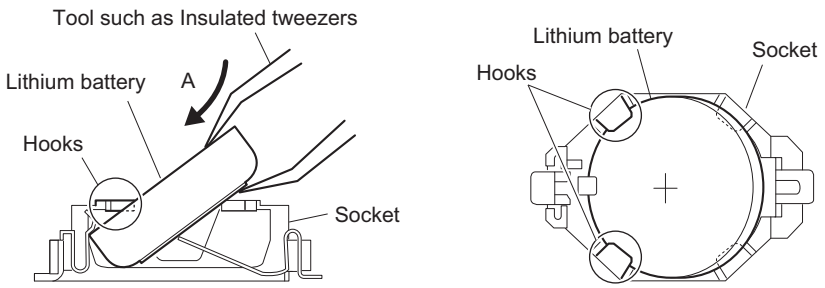

3. Push the upper part of the lithium battery of the opposite side of the hooked part (portion B) (arrow C).

Tip

Push the lithium battery until it snaps in place.

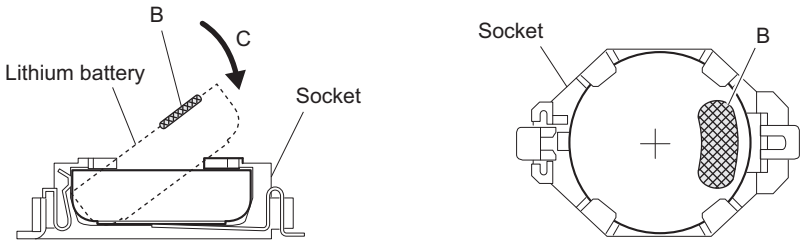

1-10. Non-reusable Parts

- Gasket (MS (327))

Gasket (MS (327)) are not reusable. Prepare new parts in advance.

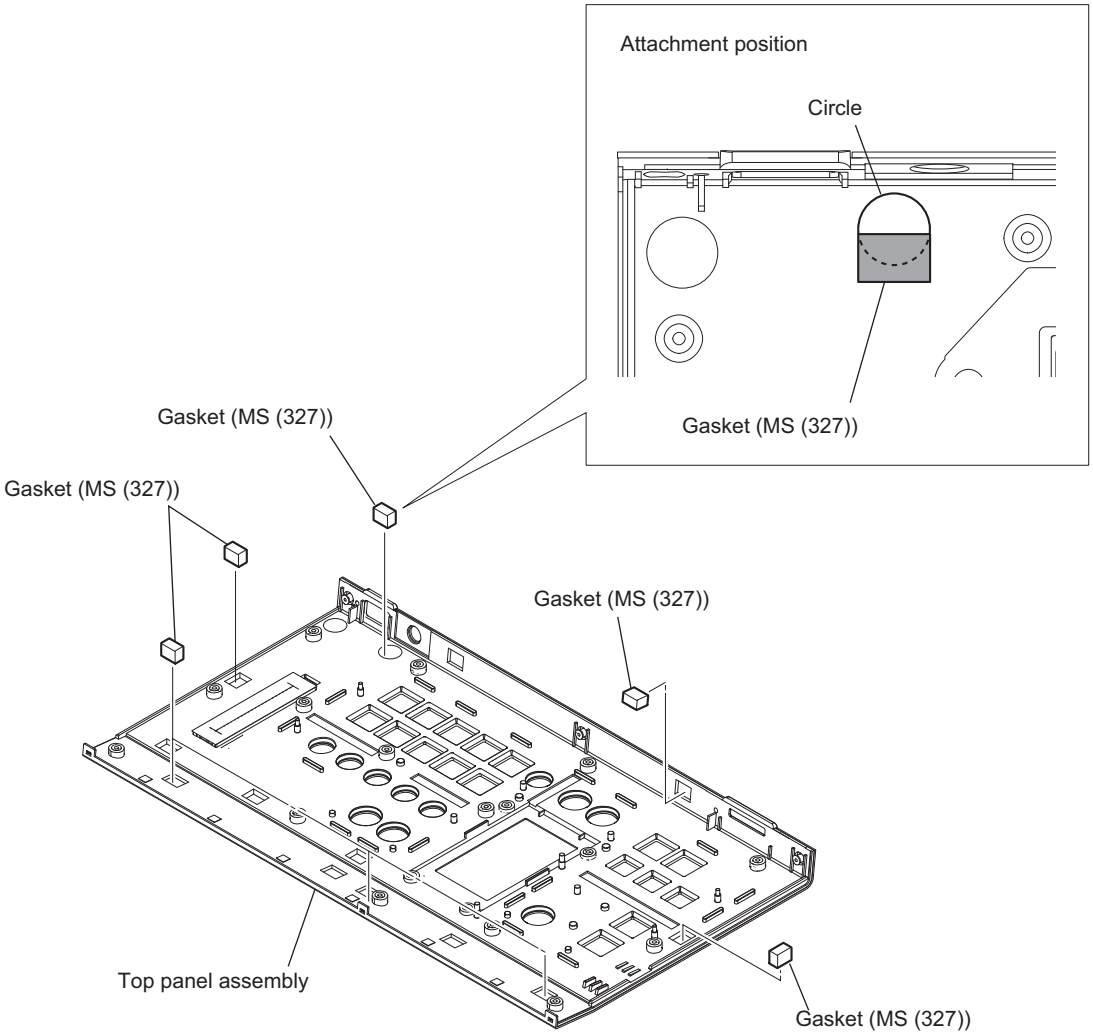

Section 2
Troubleshooting

2-1. Blinking or No Lighting of On-board LEDs

When an error or alarm occurs in the unit, the LED on the SY-1074 board turns off or blinks. (For details of the LED, refer to "1-3-1. SY-1074 Board" in "1-3. Function of Onboard LED Indicators".)

Symptom	Assumed factor	Solution
The LED (D307) repeats longer flashing and quicker flashing alternately.	An error occurred in IC6001 during firmware update.	Disconnect the power cord and connect again to restart the unit. And then, do firmware update all over again. If the action has no effect, restore the connection around the MU-1001 board, or replace the MU-1001 board.
The LED (D1400) does not light.	IC1000 is not configured successfully.	Check the signal paths from IC1000 to IC1500. When the error occurs after firmware update, the program of IC1000 is not written on IC1500 correctly. Do firmware update all over again.
The LED (D3100) does not light.	IC3000 is not configured successfully.	Check the signal paths from IC3000 to IC3101. When the error occurs after firmware update, the program of IC3000 is not written on IC3101 correctly. Do firmware update all over again.
The LED (D7201) repeats longer flashing and quicker flashing alternately.	An error occurred in IC6001 during firmware update.	Disconnect the power cord and connect again to restart the unit. And then, do firmware update all over again. If the action has no effect, restore the connection around the MU-1001 board, or replace the MU-1001 board.
At start up, the LED (D9312) blinks in green. After several seconds, the LED turns solid red.	The power system has some problem.	Check the following points. Replace any problematic parts or boards. 1. Check the output from IC9306 on SY-1074 board. There must be 8 volts output from the IC. 2. Check the connection between SY-1074 board (CN7101) and MU-1001 board (CN3001). The connection must be normal. 3. Disconnect the plug from DC IN 12V connector of the unit, and then check the resistance values between GND and each output terminal of IC002 on SY-1074 board (ch1 to ch6). Any short circuit must not be suspected. 4. Check the fuses (SY-1074 board and MU-1001 board). They must not be broken. **Tip** Information on fuses is described in "1-6-1. Replacing Fuses".

2-2. The Unit Does Not Start Up Normally

The symptom rarely occurs but the unit does not start up normally. For example, image distortion of MV appears or PGM does not come out normally.
If the unit shows such symptoms, disconnect the power cord and connect again, and then turn on the unit to check the operation. After that, if the unit works fine, consider that the unit is normal.
If the symptom appears repeatedly, check the connection between SY-1074 board and MU-1001 board. When the symptom appears after the connection is fixed, replace the SY-1074 board or MU-1001 board.

Section 3
Replacement of Main Parts

3-1. Tightening Torque

When tightening screws used in this unit, be sure to use a torque driver and tighten screws to the specified tightening torque.
If the specified tightening torque is described in the text in this section, tighten screws to the specified tightening torque in the text.

Tightening torque
M2: 0.18 ±0.03 N·m
M2.6: 0.53 ±0.07 N·m
M3: 0.80 ±0.12 N·m

Tip

When using the torque driver with the notation of cN·m, interpret it as follows.
Example: 0.8 N·m = 80 cN·m

3-2. Top Panel Assembly

Procedure

1. Remove the 12 screws.

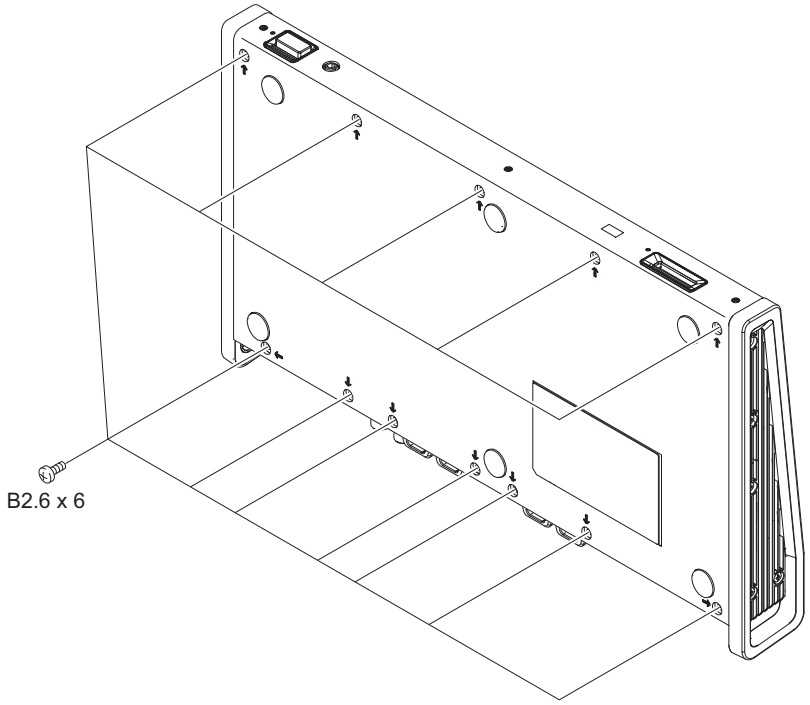

2. Remove the USB lid and the screws.
   (1) Remove the screw, and then remove the USB lid.
   (2) Remove the nine screws.

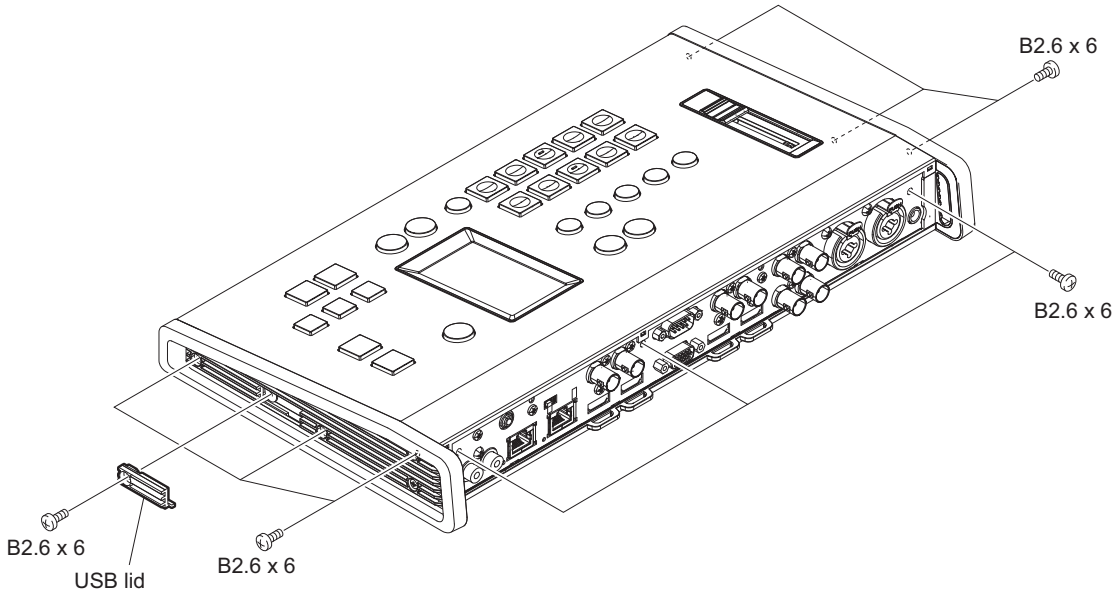

3. Remove the top panel assembly.
   (1) Lift the rear side of the top panel assembly in the direction of arrow A, and then slide it in the direction of arrow B.
   (2) Open the top panel assembly in the direction of the arrow C.
   (3) Disconnect the three flexible flat cables from the three connectors (CN7008 to CN7010) on the SY-1074 board.

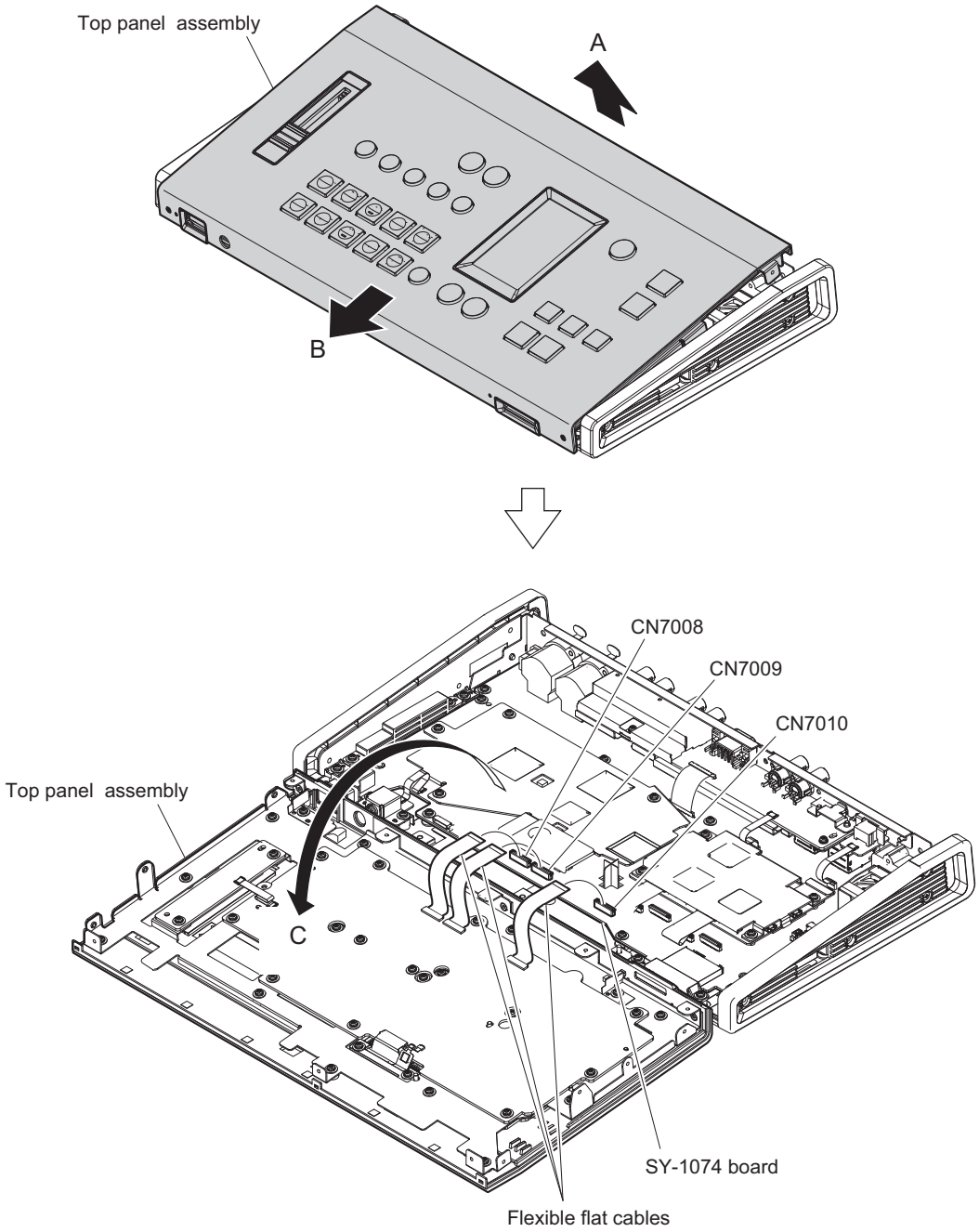

4. Install the removed parts by reversing the steps of removal.

3-3. KY-1014 Board

Preparation

1. Remove the top panel assembly. (Refer to "3-2. Top Panel Assembly".)

Procedure

1. Disconnect the four flexible flat cables from the four connectors (CN2004 to CN2007) on the KY-1014 board.
2. Disconnect the three flexible boards from the three connectors (CN2003, CN8040, CN8041) on the KY-1014 board.
3. Remove the 11 screws, and then remove the KY-1014 board.

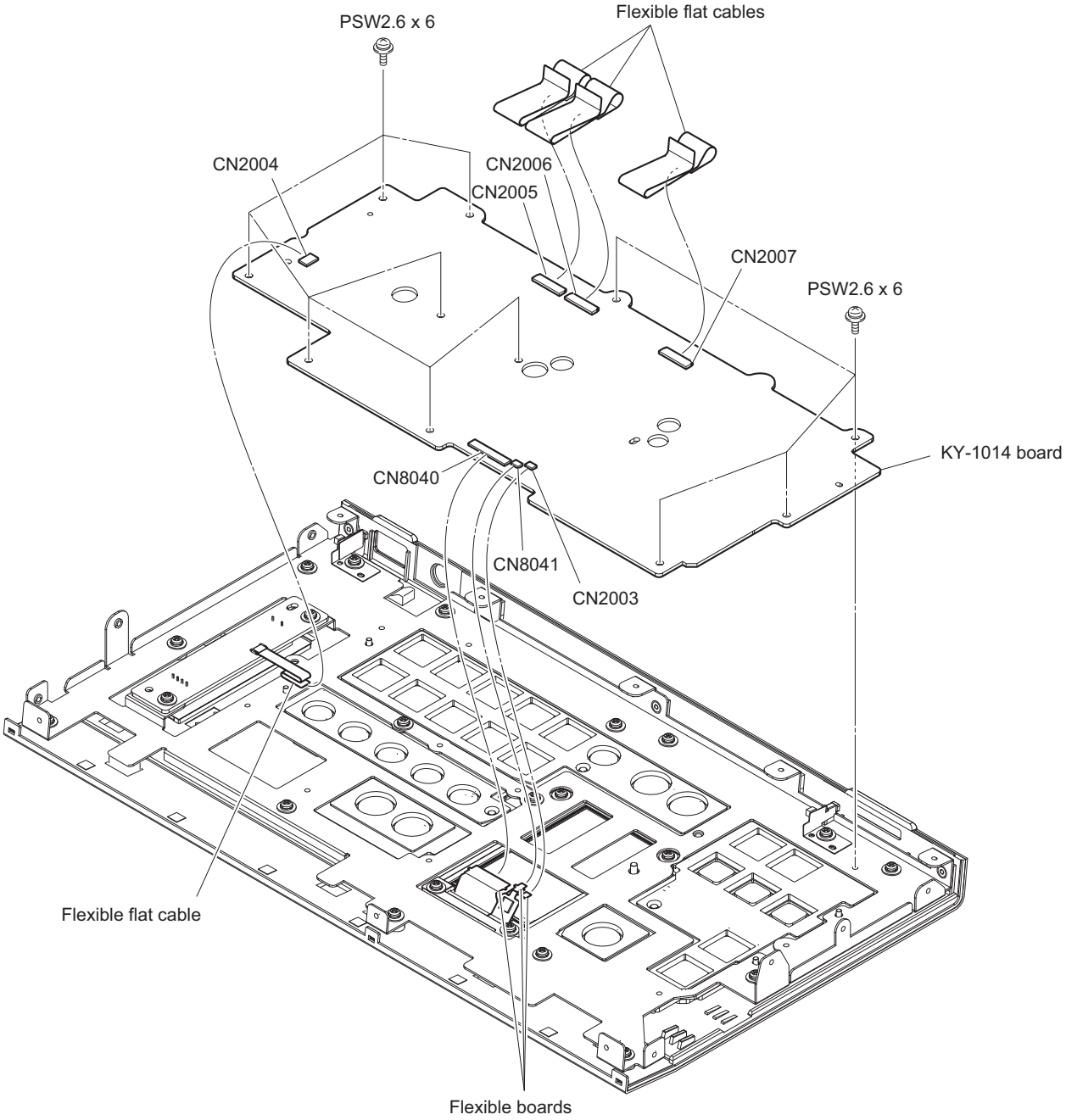

4. Install the removed parts by reversing the steps of removal.

3-4. VR-1002 Board

Preparation

1. Remove the top panel assembly. (Refer to "3-2. Top Panel Assembly".)

Procedure

1. Disconnect the flexible flat cable from the connector (CN2401) on the VR-1002 board.
2. Remove the two screws, and then remove the VR-1002 board.

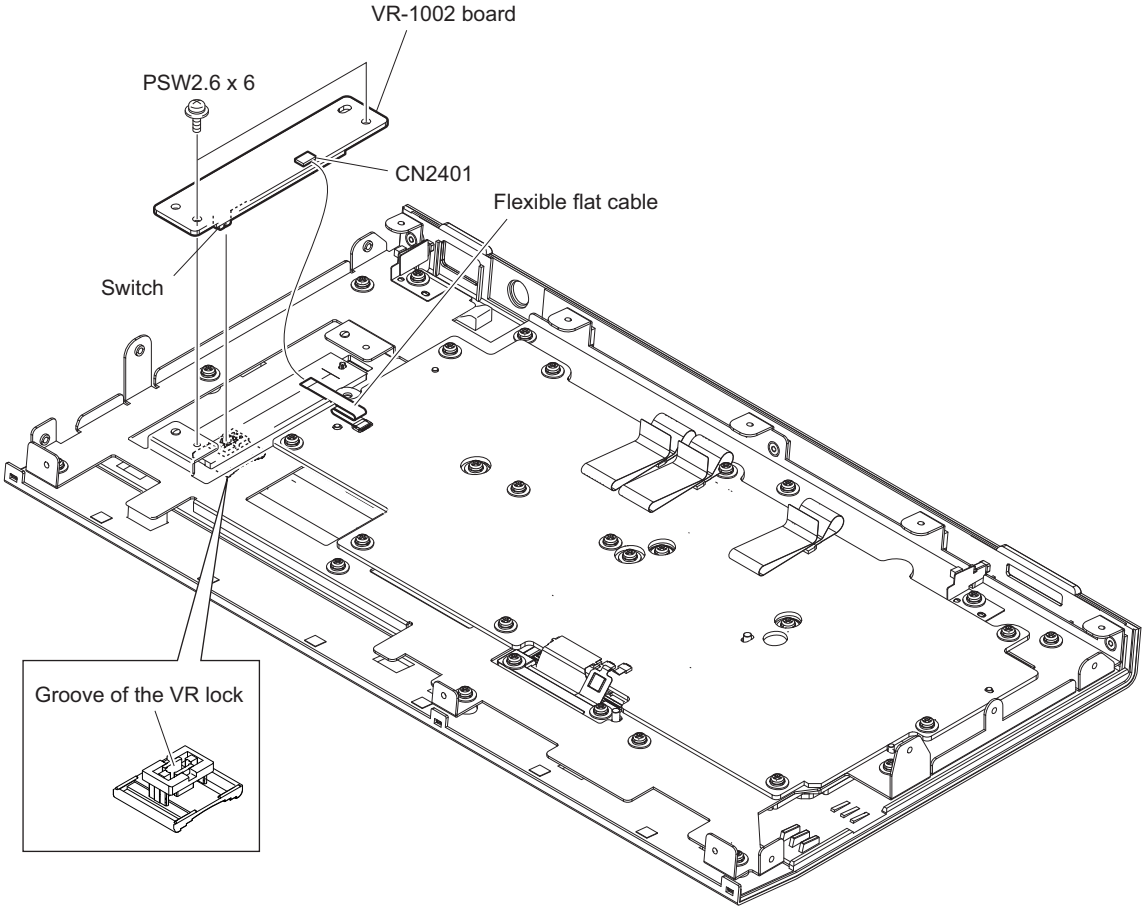

Note

When installing the VR-1002 board, insert the switch into the groove of the VR lock.

3. Install the removed parts by reversing the steps of removal.

3-5. LCD Assembly

Preparation

1. Remove the top panel assembly. (Refer to "3-2. Top Panel Assembly".)
2. Remove the KY-1014 board. (Refer to "3-3. KY-1014 Board".)
3. Remove the VR-1002 board. (Refer to "3-4. VR-1002 Board".)

Procedure

1. Remove the two lens plate assemblies.
   (1) Remove the two screws.
   (2) Remove the tip of each lens-A from the hole, and then remove the two lens plate assemblies.

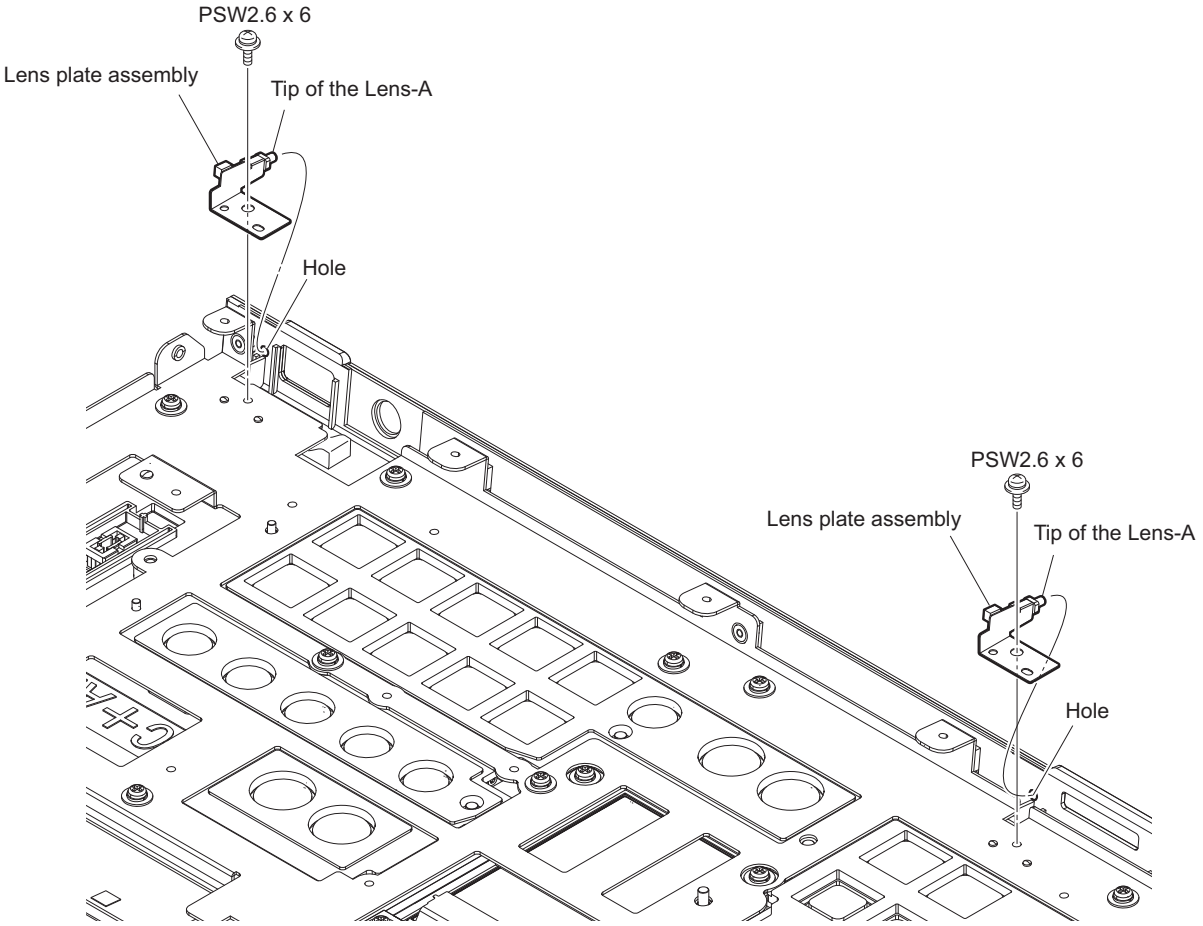

2. Remove the 13 screws (PSW2.6 x 6) and three screws (P2 x 5), and then remove the KY plate assembly.

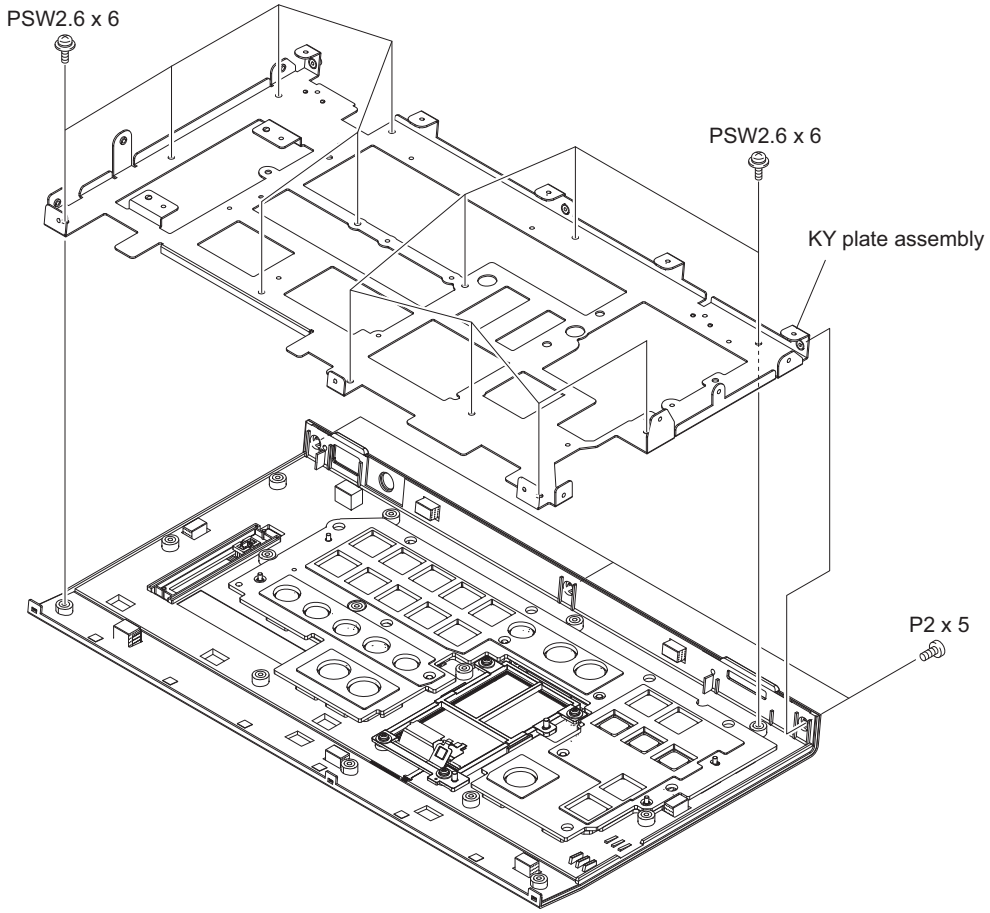

3. Remove the four screws, and then remove the LCD assembly.

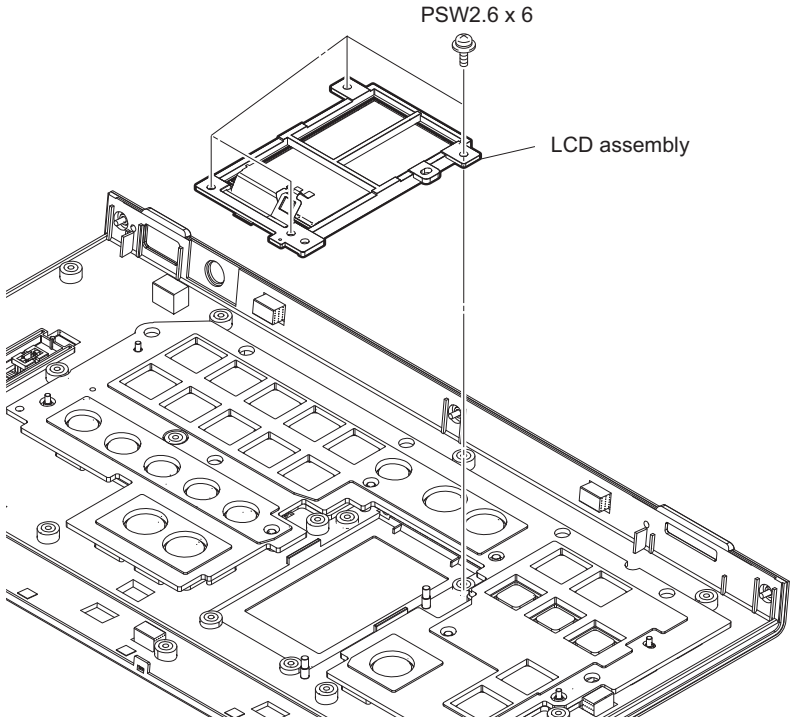

4. Install the removed parts by reversing the steps of removal.

3-6. DC Fan

Preparation

1. Remove the top panel assembly. (Refer to "3-2. Top Panel Assembly".)

Procedure

1. Remove the DC fan assembly.
   (1) Disconnect the harness from the connector (CN7002) on the SY-1074 board.
   (2) Release the harness from the wire saddle (A).
   (3) Remove the two screws, and then remove the DC fan assembly.

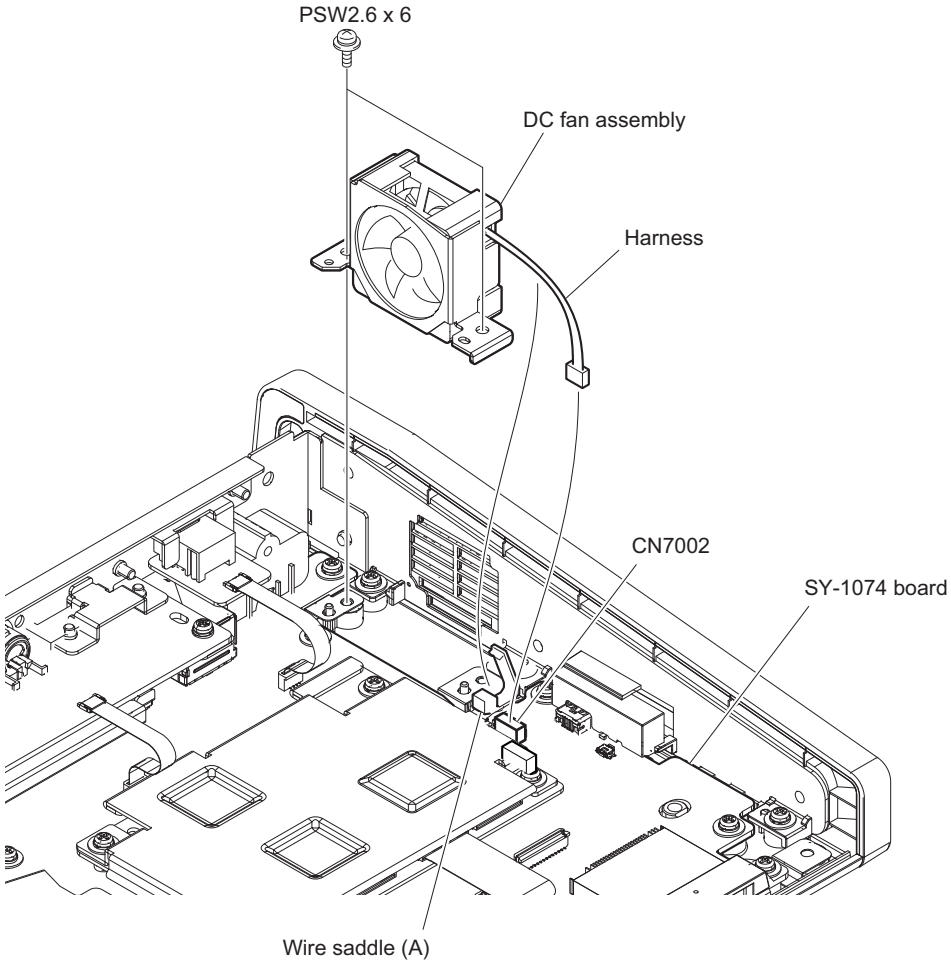

2. Remove the fan plate and the four fan holders from the DC fan.

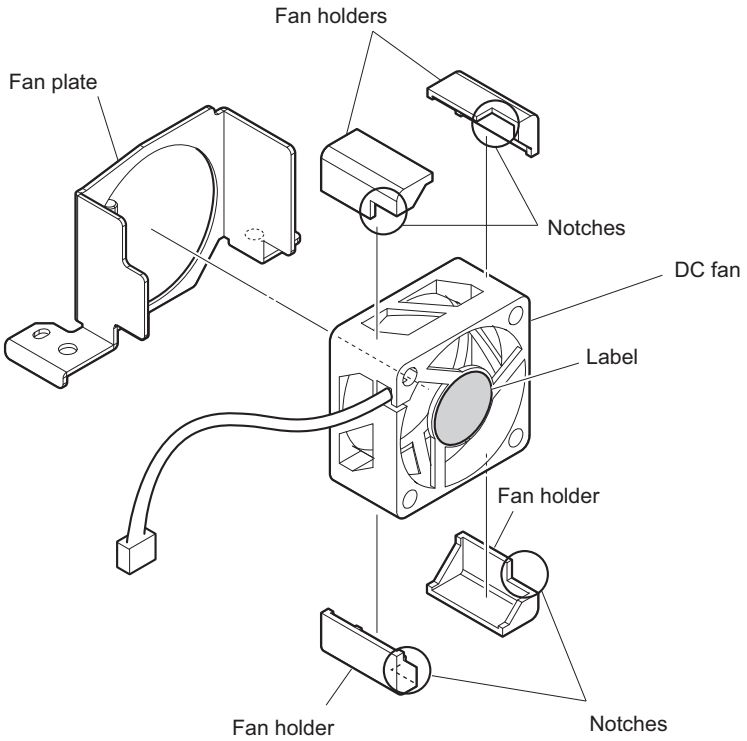

Note

When attaching the fan holders, set the notches of the fan holders at the positions shown in the figure above.

3. Install the removed parts by reversing the steps of removal.

3-7. IF-1010 Board

Preparation

1. Remove the top panel assembly. (Refer to "3-2. Top Panel Assembly".)

Procedure

1. Remove the IF-1010 board assembly.
   (1) Disconnect the fine-wire coaxial cable from the connector (CN1001) on the IF-1010 board.
   (2) Disconnect the flexible flat cable from the connector (CN1004) on the IF-1010 board.
   (3) Disconnect the flexible flat cable from the connector (CN2301) on the JK-1017 board.
   (4) Remove the seven screws, and then remove the IF-1010 board assembly in the direction of the arrow.

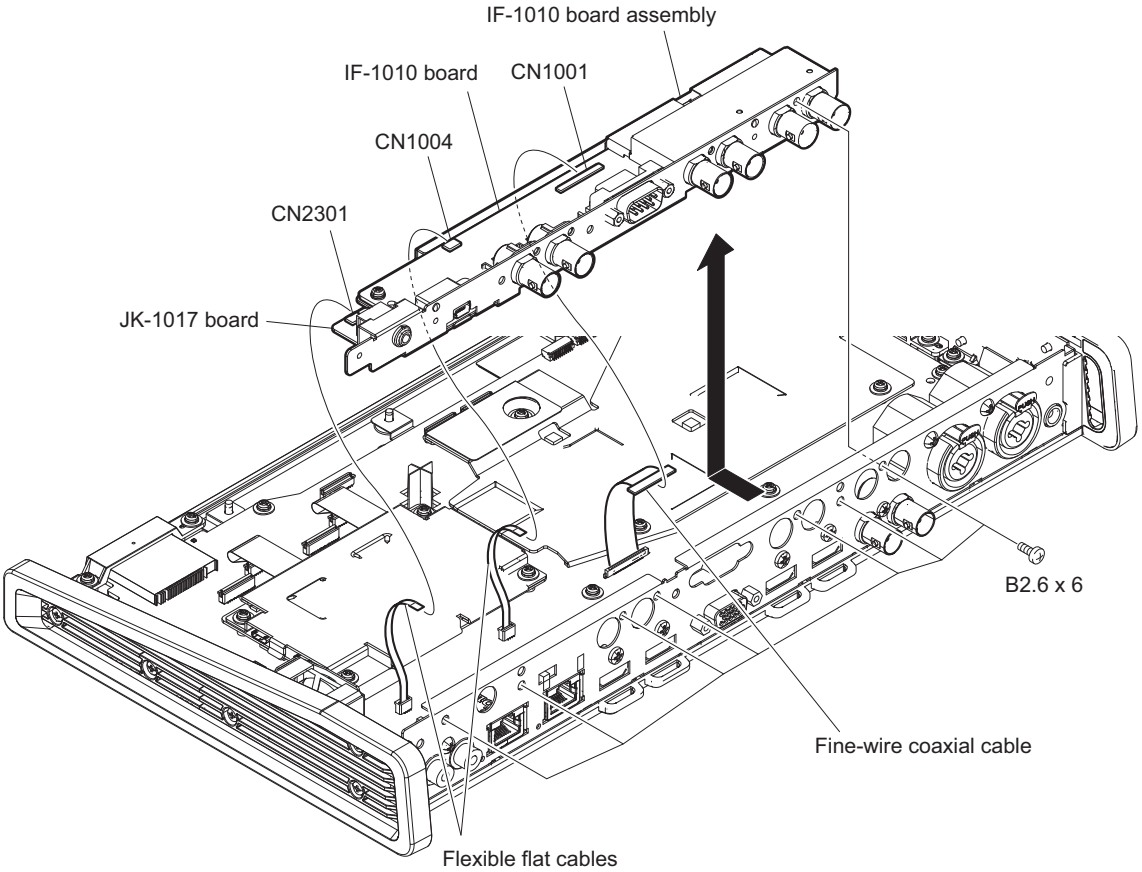

2. Remove the IF shield plate and USB plate.
   (1) Remove the screw, and then remove the IF shield plate.
   (2) Remove the two screws, and then remove the USB plate.

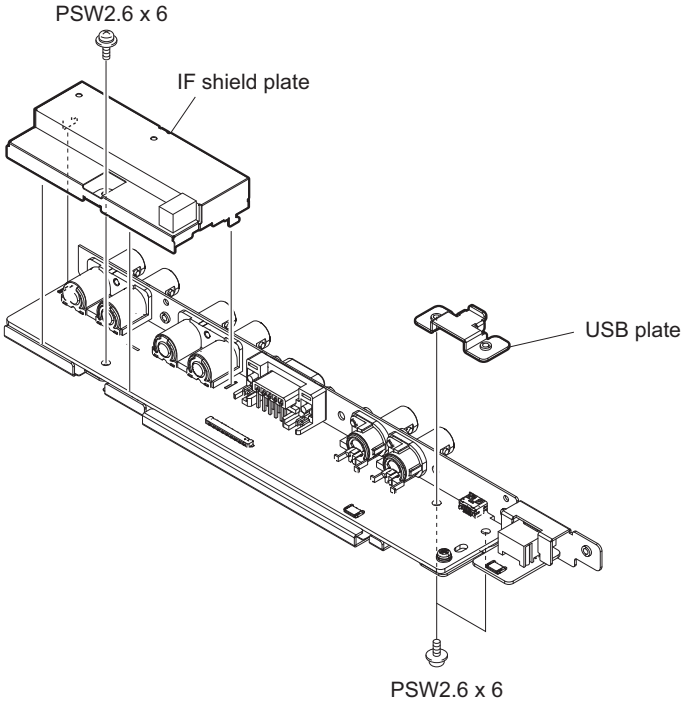

3. Remove the IF-1010 board.
   (1) Remove the two hexagon screws.
   (2) Remove the screw (PSW2.6 x 6), and then remove the IF-1010 board.

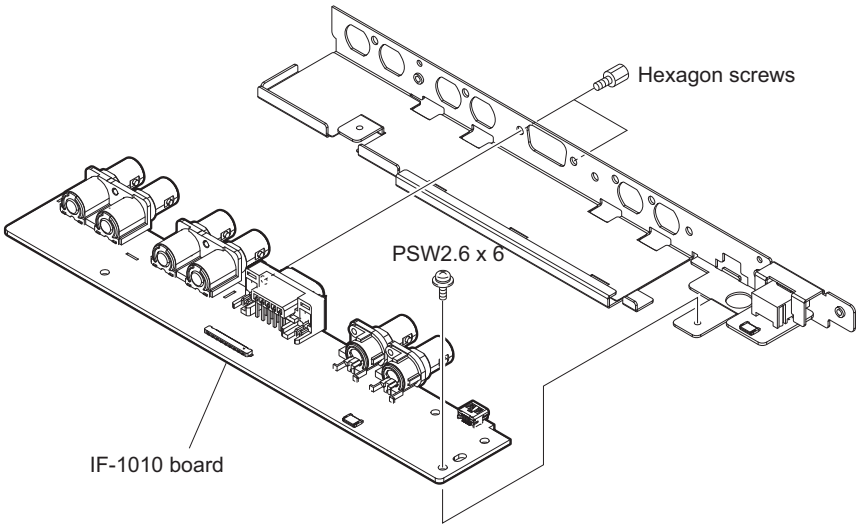

Note

Hexagon screw tightening torque: 0.53 ±0.07 N·m

4. Install the removed parts by reversing the steps of removal.

3-8. MU-1001 Board

Preparation

1. Remove the top panel assembly. (Refer to "3-2. Top Panel Assembly".)

Procedure

1. Remove the MU heat sink.
   (1) Remove the four screws, and then MU heat sink.
   (2) Remove the three sheets (13X13X1.3).

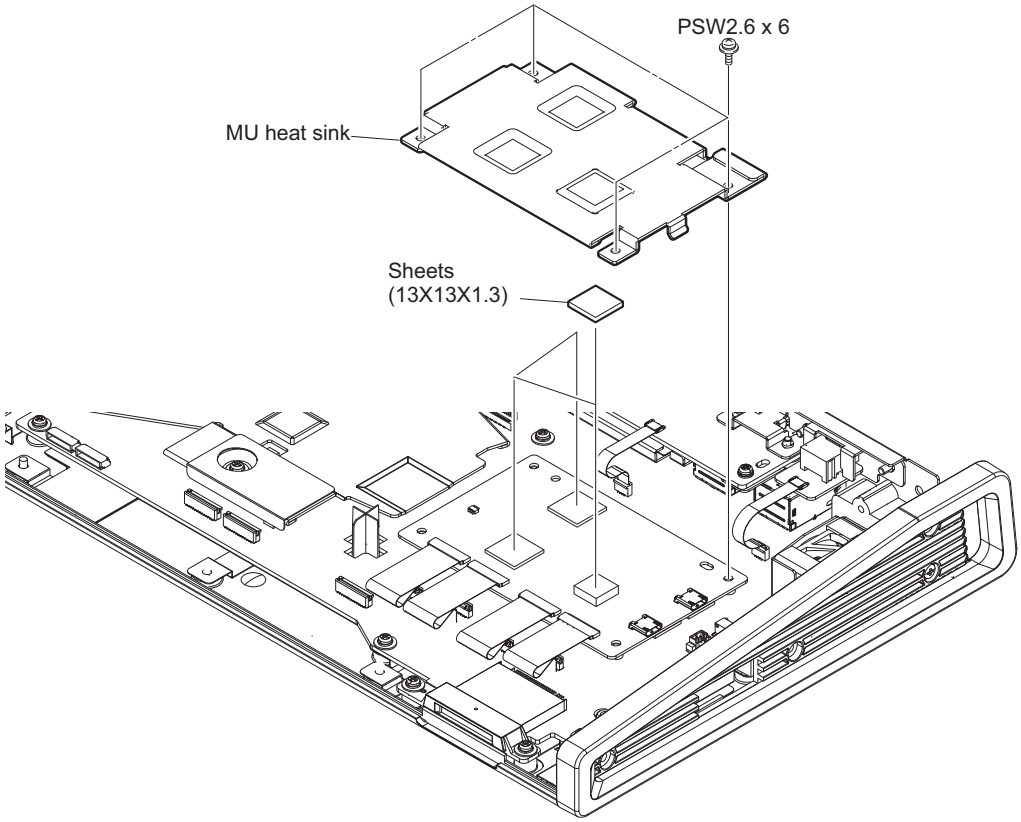

2. Remove the MU-1001 board.
   (1) Disconnect the four flexible flat cables from the four connectors (CN3002. CN 3005, CN3007, CN3008) on the MU-1001 board.
   (2) Remove the MU-1001 board from the connector (CN7101) on the SY-1074 board.

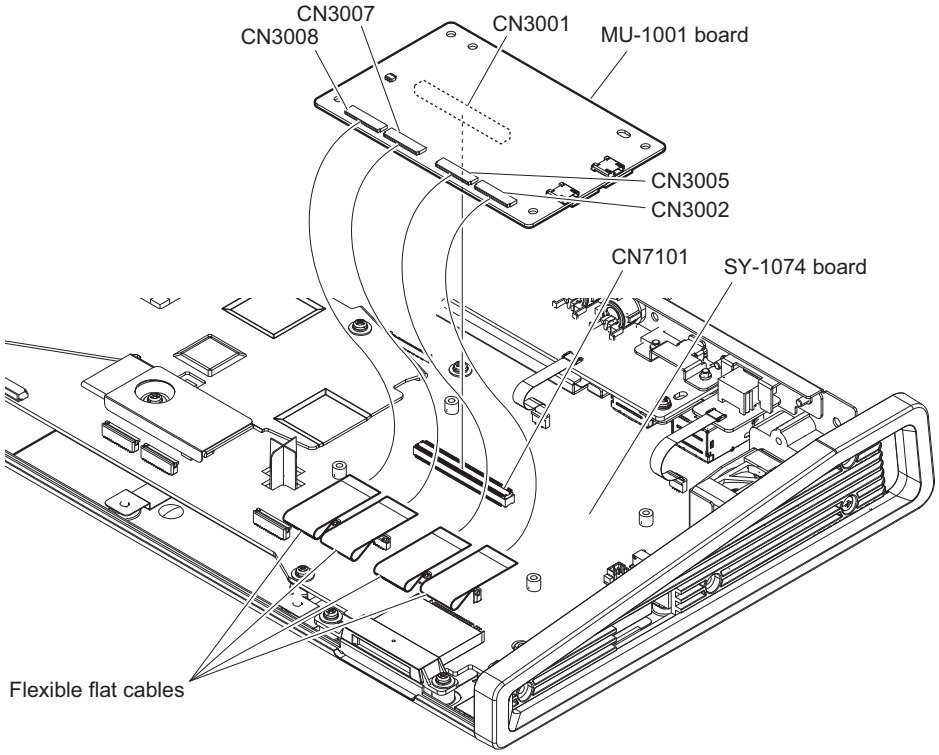

3. Install the removed parts by reversing the steps of removal.

3-9. SY-1074 Board

Preparation

1. Remove the top panel assembly. (Refer to "3-2. Top Panel Assembly".)
2. Remove the DC fan assembly. (Refer to "3-6. DC Fan".)
3. Remove the IF-1010 board assembly. (Refer to "3-7. IF-1010 Board".)
4. Remove the MU-1001 board. (Refer to "3-8. MU-1001 Board".)

Procedure

1. Remove the SY heat sink assembly.
   (1) Remove the five screws, and then SY heat sink assembly.
   (2) Remove the three radiation sheets (D).
   (3) Remove the sheet (13X13X1.3).

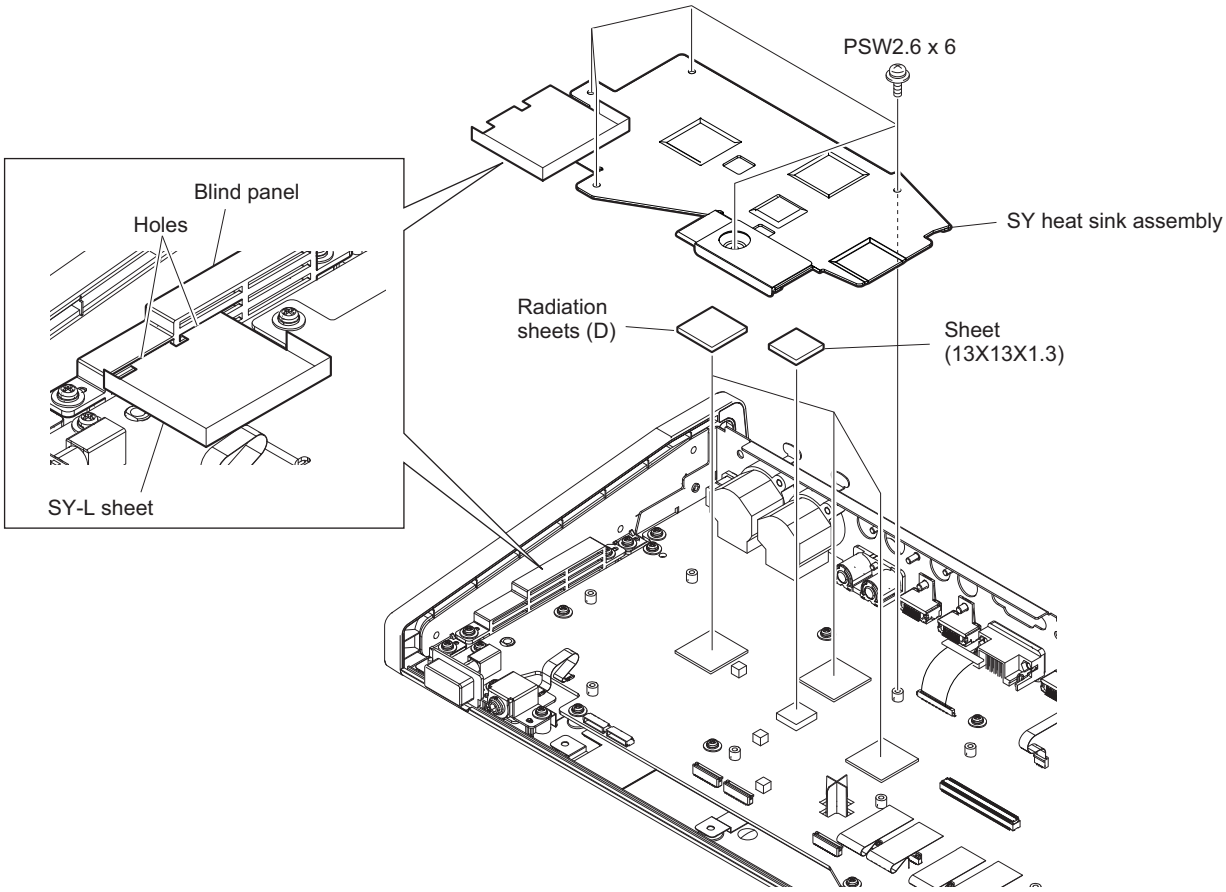

Note

When installing the SY heat sink assembly, insert the SY-L sheet into the hole of the blind panel.

2. Remove the blind panel and the screws.
   (1) Remove the two screws (PSW2.6 x 6), and then remove the blind panel.
   (2) Remove the two screws (PSW2.6 x 6) and the screw (B2.6 x 6).

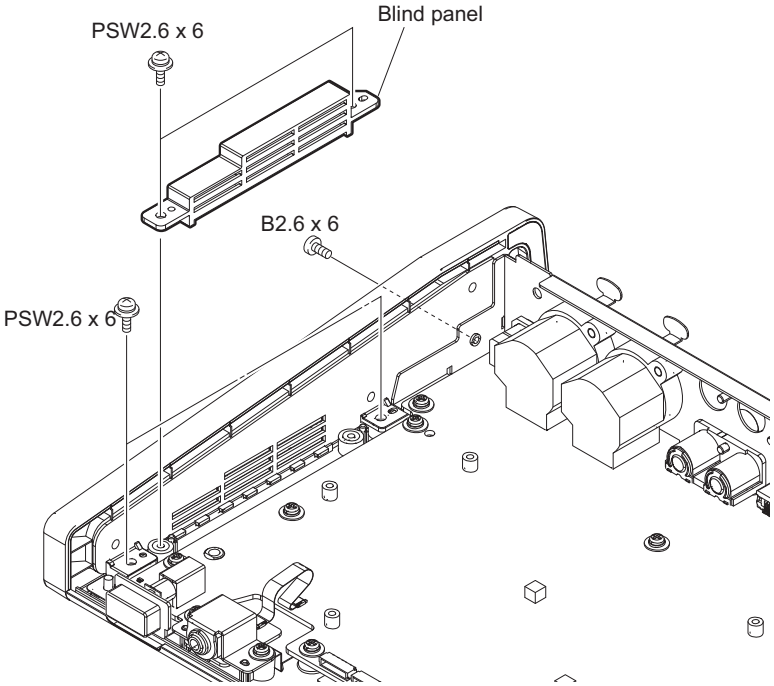

3. Turn the side panel (L) in the direction of arrow, and then remove it.

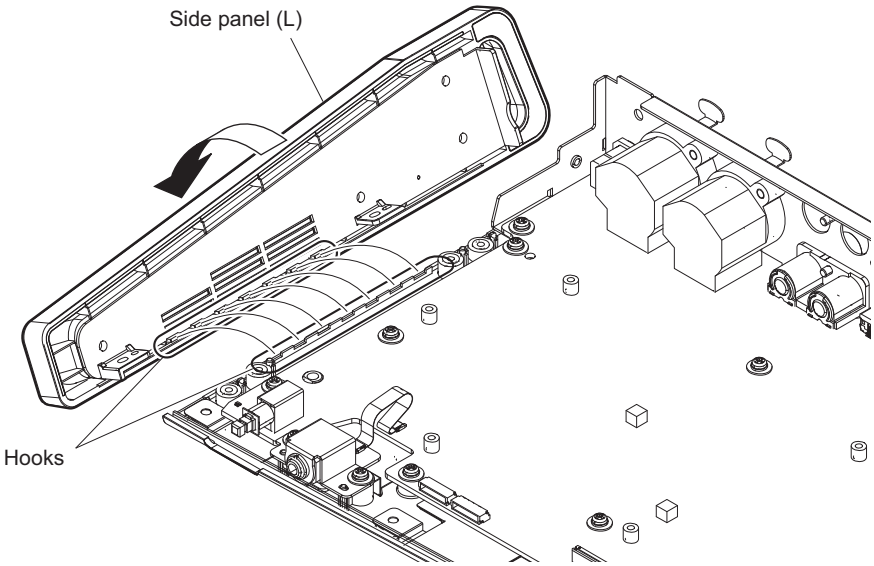

4. Remove the three screws (PSW2.6 x 6) and the screw (B2.6 x 6).

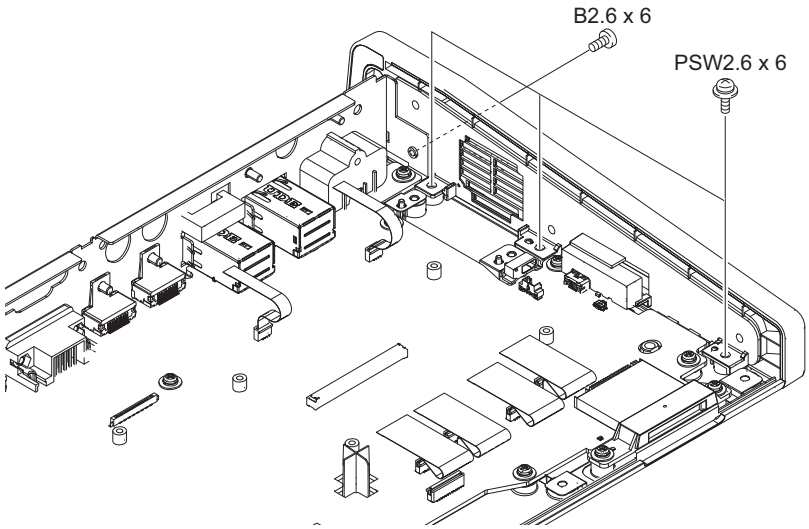

5. Turn the side panel (R) in the direction of arrow, and then remove it.

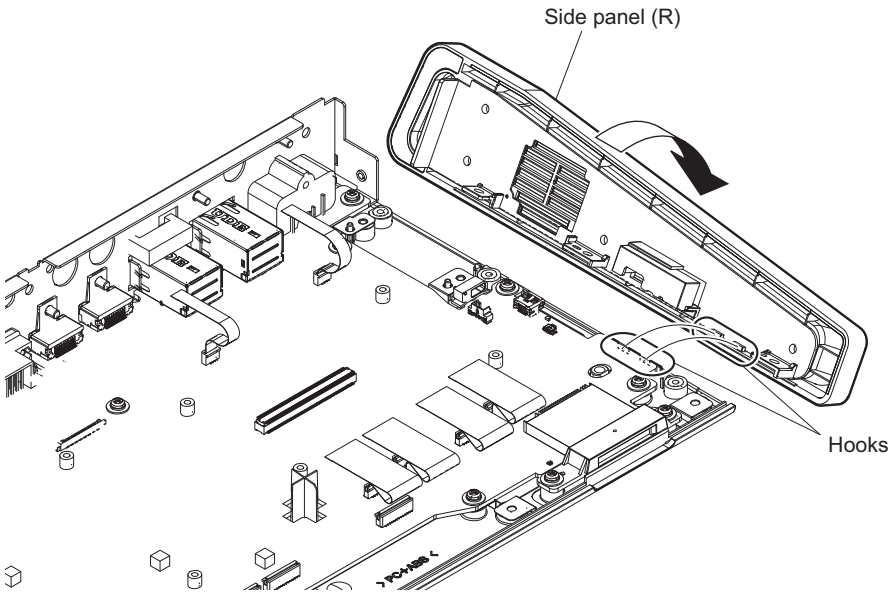

6. Remove the lithium battery. (Refer to "1-9. Removing/Installing Lithium Battery".)

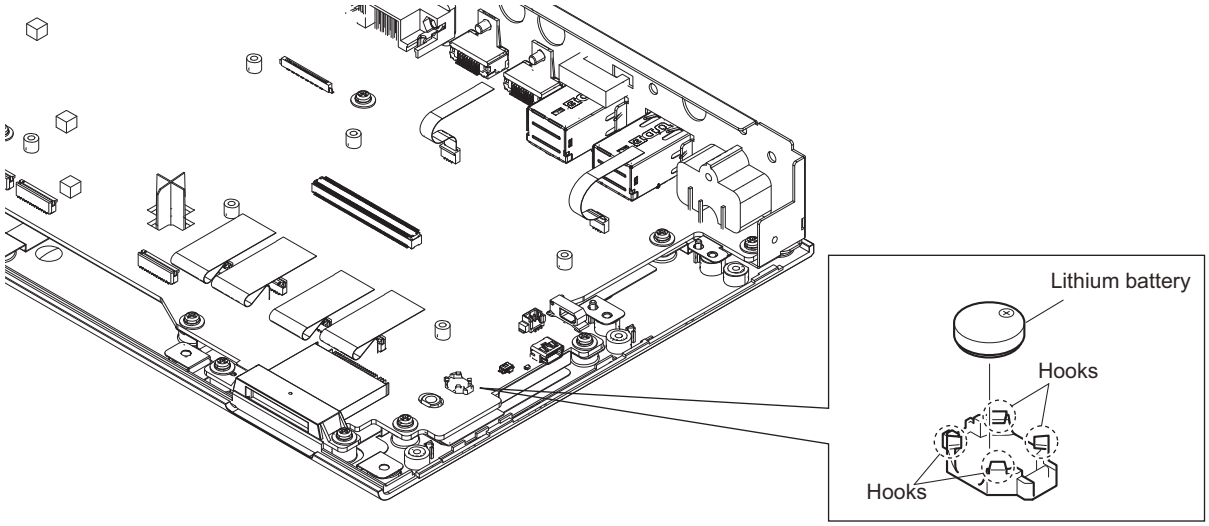

7. Remove the power knob, card guide S, fine-wire coaxial cable, flexible flat cables.
   (1) Remove the power knob.
   (2) Remove the two screws, and then remove the card guide S.
   (3) Disconnect the fine-wire coaxial cable from the connector (CN7001) on the SY-1074 board.
   (4) Disconnect the six flexible flat cables from the six connectors (CN7004, CN7007, CN 7102 to CN7105) on the SY-1074 board.

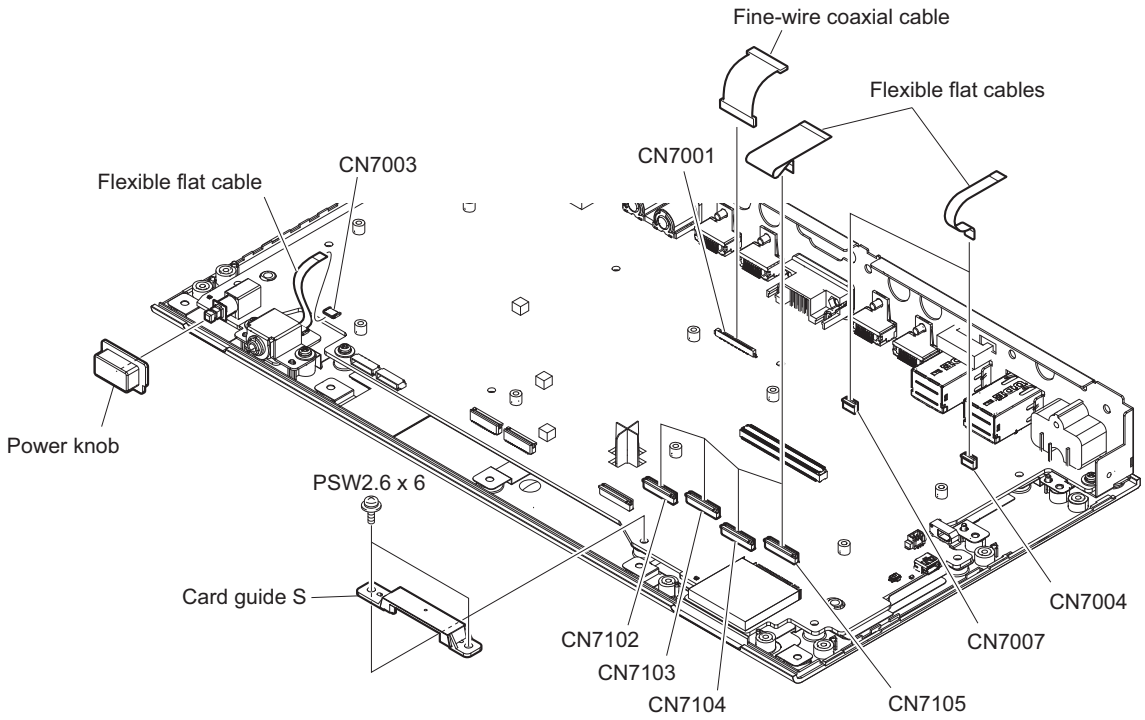

8. Remove the 13 screws.

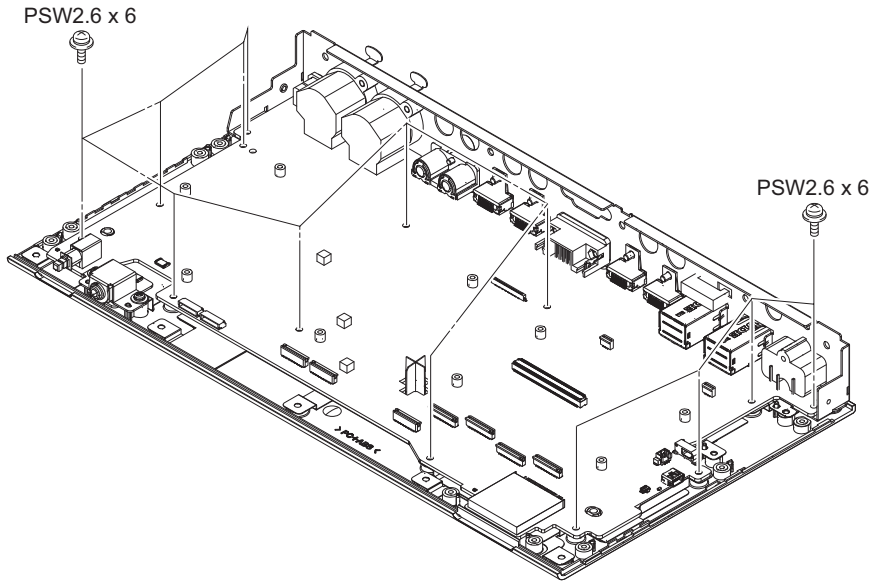

9. Tilt the SY-1074 board assembly in the direction of arrow A, and then remove it in the direction of arrow B.

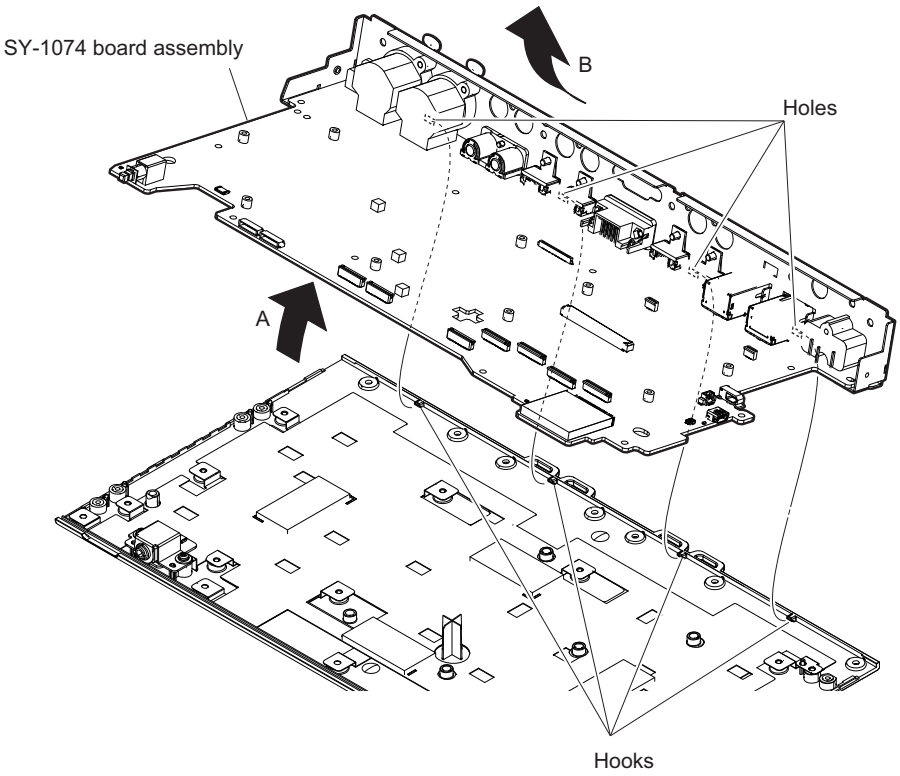

10. Remove the rear plate and wire saddle (A).
    (1) Remove the five screws (BVTP3 x 8), four screws (B3 x 6), two hexagon screws, screw (B2.6 x 6), and then remove the rear plate.
    (2) Remove the wire saddle (A).

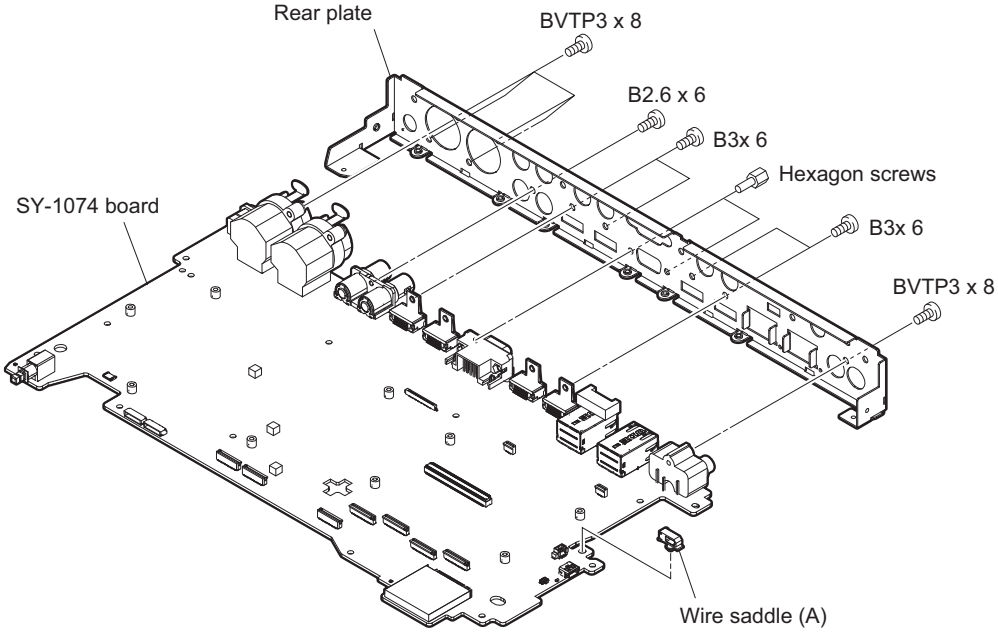

Note

Hexagon screw tightening torque: 0.53 ±0.07 N·m

11. Install the removed parts by reversing the steps of removal.

3-10. JK-1017 Board (Front)

Preparation

1. Remove the top panel assembly. (Refer to "3-2. Top Panel Assembly".)

Procedure

1. Remove the JK-1017 board assembly.
   (1) Disconnect the flexible flat cable from the connector (CN2301) on the JK-1017 board.
   (2) Remove the two screws, and then remove the JK-1017 board assembly.

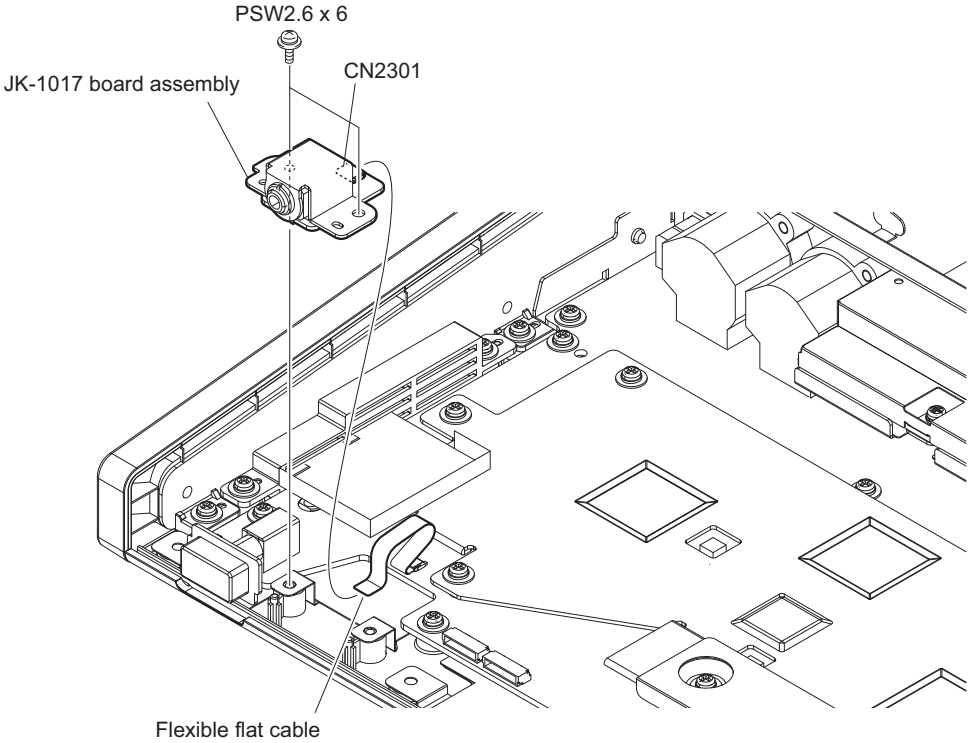

2. Remove the nut, and then remove the JK-1017 board.

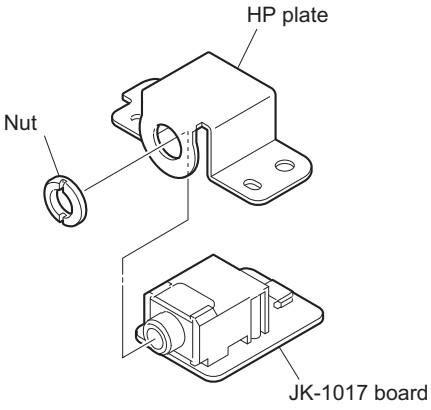

3. Install the removed parts by reversing the steps of removal.

3-11. JK-1017 Board (Rear)

Preparation

1. Remove the top panel assembly. (Refer to "3-2. Top Panel Assembly".)

Procedure

1. Remove the JK-1017 board.
   (1) Disconnect the flexible flat cable from the connector (CN2301) on the JK-1017 board.
   (2) Remove the nut, and then remove the JK-1017 board.

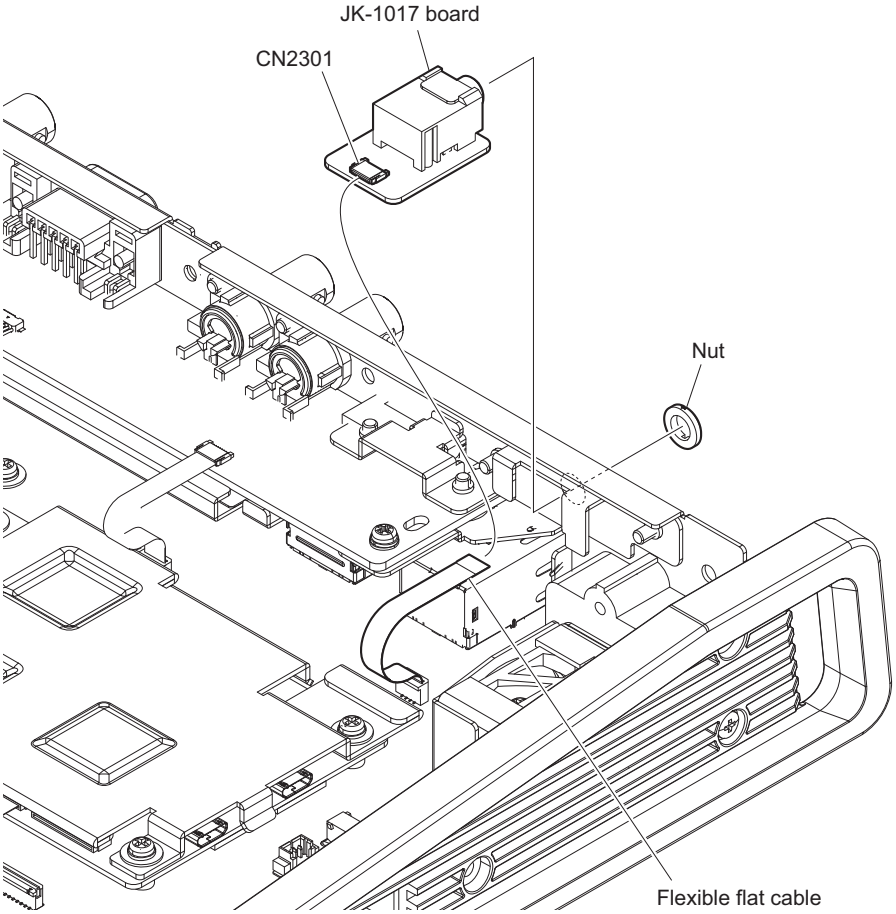

2. Install the removed parts by reversing the steps of removal.

Section 4
Error Message

If a problem occurs during operation of the unit, a message will appear in the menu panel and the PC UI.
Check the content of the message and respond accordingly.

4-1. Message List

ID	Message	Meaning	Solution
0005	The main CPU is overheating. Perform shutdown immediately.	The main CPU is overheating. Perform shutdown immediately.	Check around the unit and make sure that the air vents are not blocked. When the same message appears at the next power on, do as follows. When the temperature of MU-1001 board is abnormally high, replace the MU-1001 board. When the board is normal, check the temperature of the IC on the SY-1074 board. When the temperature is abnormally high, replace the problematic IC or the SY-1074 board.
0006	Cannot record.Movie scene number is full.	Cannot record. Movie scene number is full.	Delete unnecessary files from Sony PlayMemories Home. For details on operations, refer to the operating instructions for Sony PlayMemories Home.
0009	This is a read-only memory card.	A read-only memory card is inserted.	Use a writable memory card.
0010	Incompatible type of memory card.	An unsupported memory card is inserted.	Use a supported memory card. Refer to the operating instructions.
0012	Cannot record. The memory card is full.	Cannot record. The memory card is full.	Delete unnecessary files from Sony PlayMemories Home. For details on operations, refer to the operating instructions for Sony PlayMemories Home.
0013	The memory card must be formatted.	The memory card must be formatted.	Format the memory card with the unit. Refer to the operating instructions.
0014	The memory card is locked. Check the tab.	The memory card is locked. Check the data protection tab.	Check the position of the memory card's data protection tab.
0015	The fan stopped abnormally. Shutdown will be performed.	The fan stopped abnormally. Shutdown will be performed.	When the same message appears at the next power on, do as follows. Check the fan. If the fan has any problem, replace it. When the fan is normal, the signal from the fan may not reach the MU-1001 board. Check the connections around the board or replace the board.
0017	This media does not support recording and playback of XAVC S movies.	The memory card does not support XAVC S recording or playback.	To perform XAVC S recording or playback, use an SDXC memory card (Class 10 or higher).
0018	The memory card is invalid.	An invalid memory card is inserted.	Use a writable memory card.

Continued

ID	Message	Meaning	Solution
0019	The main CPU is overheating. Shutdown will be performed.	The main CPU is overheating. Perform shutdown immediately.	Check around the unit and make sure that the air vents are not blocked. When the same message appears at the next power on, do as follows. When the temperature of MU-1001 board is abnormally high, replace the MU-1001 board. When the board is normal, check the temperature of the IC on the SY-1074 board. When the temperature is abnormally high, replace the problematic IC or the SY-1074 board.
0021	Access is prohibited on this memory card.	Access is prohibited on the memory card.	Use a writable memory card.
0025	Cannot record. The image database file is corrupted. Restore media to use again.	The image database file is corrupted. The media must be recovered to enable its use.	This message appears when the image database file is defective. Insert the memory card again, and follow the instructions in the message (ID-0049) to perform recovery.
0032	Recording has stopped due to buffer overflow.	Recording has stopped due to buffer overflow.	Recording has stopped due to an overflow of the temporary data storage area during video recording. The error may occur by using old memory cards or using memory cards with low writing performance. Ask the customer to use an appropriate memory card.
0033	Recording has stopped due to the memory card being full.	Recording has stopped due to the memory card being full.	Delete unnecessary files from Sony PlayMemories Home. For details on operations, refer to the operating instructions for Sony PlayMemories Home.
0034	LOGO1.png could not be found. Store the file under the specified location and name. \LOGO1.png	LOGO1.png could not be found. Store the file under the specified location and name. \LOGO1.png	Check the file name and location on the memory card to which the file was copied. Refer to the operating instructions.
0035	LOGO2.png could not be found. Store the file under the specified location and name. \LOGO2.png	LOGO2.png could not be found. Store the file under the specified location and name. \LOGO2.png	Check the file name and location on the memory card to which the file was copied. Refer to the operating instructions.
0044	Memory card write incomplete. Recover data?	The data written on the memory card is incomplete. Do you want to recover the data?	If the data is not recovered, recording on the unit or playback in Sony PlayMemories Home may not be possible. **Note** The recovery process does not guarantee complete recovery. For XAVC S data, you will be able to resume recording after recovery, but playback on a computer will not be possible.
0047	A memory card other than the card to be recovered is inserted. Insert the proper card.	A memory card other than the card to be recovered is inserted. Insert the proper card.	This message appears when a memory card that requires recovery is replaced with another card without performing recovery. Insert the card that requires recovery.
0049	Inconsistencies found in the image database file. Recover data?	Inconsistencies were found in the image database file. Do you want to recover the data?	Recording is not possible when there is the image database file is defective. Follow the instructions in the message to perform recovery.
0062	Cannot recognize USB device. Check the connection.	The USB device is cannot be recognized. Check the connection.	Check the connection to the computer and the settings.
0067 0087	Check the LAN cable connection.	Check the LAN cable connection.	Check the LAN cable and its connection.

Continued

ID	Message	Meaning	Solution
0068 0088	Failed to acquire an IP address. Change the IP address setting.	Acquisition of the IP address failed. Change the IP address setting.	This message appears when you attempt to automatically acquire the IP address on a network without a DHCP server. Connect to a network that includes a DHCP server, or configure the static IP setting.
0069 0089	Failed to acquire an IP address. Check the DNS server setting.	Acquisition of the IP address failed. Check the DNS server setting.	Acquisition of the IP address from the DNS server failed. Check the DNS server setting.
0070	Cannot execute functions.	The function cannot be executed.	This is a network error. Check the network.
0071 0091	Could not verify the certificate. Continue connection?	The certificate could not be verified. Do you want to proceed with connection?	Update the certificate. Refer to the operating instructions.
0072	The user name or password is invalid. Check the account settings.	The user name or password is invalid. Check the settings.	Check the streaming settings via the PC UI.
0073	The server rejected the request.	The server rejected the request.	Connection is not possible due to a problem on the Ustream server side.
0074	Failed to connect to the Ustream server. Check the “Date Time”.	Connection to the Ustream server failed. Check the “Date Time” settings.	The Ustream function is referencing the unit’s date and time information. Configure the correct date and time.
0075	Authentication information is invalid. Check the user name and password.	The authentication information is invalid. Check the user name and password.	Reconfigure the Ustream user name and password via the PC UI.
0076	An invalid channel has been specified.	An invalid channel has been specified.	Select another channel.
0077 0078	Connection to the server terminated. Check the communication environment.	Connection to the server terminated. Check the communication environment.	Check the communication environment. Alternatively, consult the server administrator.
0079	There is a possibility that the movie was not saved correctly on the server.	Proper saving to the server may not have occurred.	Data may not have been recorded due to a problem on the Ustream server side.
0080	Not enough stream time. Could not be saved to the server.	The stream duration is insufficient. The data was not saved to the server.	The streamed video could not be recorded to the Ustream server due to its insufficient duration.
0090	Cannot execute functions.	The function cannot be executed.	This is a network error. Check the network.
0092	The user name or password is invalid. Do you want to continue configuration?	The user name or password is invalid. Do you want to proceed with configuration?	User authentication failed. Reconfigure the Ustream user name and password.
0097	Recording setting error	The format is not set correctly.	Set the file format and recording format appropriately. **Tip** To correct these settings according to the system format, refer to the Operating Instructions. When the same message appears despite any appropriate settings, disconnect the power cord and connect again to restart the unit. If the unit work correctly, any further action is not necessary. When the problem occurs again despite the above action, replace the MU-1001 board.

Continued

ID	Message	Meaning	Solution
0098	Recording error	Recording has stopped due to buffer overflow.	Recording has stopped due to an overflow of the temporary data storage area during video recording. The error may occur by using old memory cards or using memory cards with low writing performance. Ask the customer to use an appropriate memory card.
0102	Timecode setting error	The time code is not set correctly.	Set the time code appropriately. If the action has no effect, disconnect the power cord and connect again. If the unit work correctly, any further action is not necessary. When the problem occurs again despite the above action, replace the MU-1001 board.
0104	Streaming error	A streaming error occurred.	Check the user name and password, whether the line speed has dropped, and other possible factors.
0106	LAN error	A wired LAN error occurred.	Check the wired LAN settings and the network communication status.
0107	Failed to connect to the Ustream server. Check the “Date Time”.	Connection to the Ustream server failed. Check the “Date Time” settings.	The Ustream function is referencing the unit's date and time information. Configure the correct date and time.
0112	The URL or Stream Name is invalid.	The URL or stream name is invalid.	Check the URL and stream name via the PC UI.
0115	certification.pem could not be found. Store the file under the specified location and name. \certification.pem	The “certification.pem” file could not be found. Store the file under the specified location and name. \certification.pem	Check the file name and location on the memory card to which the file was copied. Refer to the operating instructions.
0116	Update failed due to the excessive file size. Contact your local Sony representative.	Update failed due to the excessive file size. Contact your local Sony representative.	File sizes of up to 1 MB are supported for the root certificate file. For details on larger file sizes, contact your local Sony representative.
0124	Cannot transmit. Check the settings and network environment.	Cannot transmit. Check the settings and network environment.	Check the URL and stream name via the PC UI. Alternatively, check the settings and network environment.
0125	The settings have been configured. You must perform [CONNECT] from the unit's [NETWORK (PC UI)] menu to apply the settings.	The settings have been configured. You must perform [CONNECT] from the unit's [NETWORK (PC UI)] menu to apply the settings.	Tap [CONNECT] in the unit's [NETWORK (PC UI)] menu to connect to the unit.

Section 5
Spare Parts

5-1. Note on Repair Parts

1. Safety Related Components Warning

WARNING

Components marked ⚠ are critical to safe operation. Therefore, specified parts should be used in the case of replacement.

2. Standardization of Parts

Some repair parts supplied by Sony differ from those used for the unit. These are because of parts commonality and improvement.

3. Stock of Parts

Parts marked with "o" at SP (Supply Code) column of the spare parts list may not be stocked. Therefore, the delivery date will be delayed.

1. 安全重要部品

⚠警告

⚠印のついた部品は安全性を維持するために重要な部品です。したがって，交換する時は必ず指定の部品を使ってください。

2. 部品の共通化

ソニーから供給する補修用部品は，セットに使われているものと異なることがあります。
これは部品の共通化，改良等によるものです。

3. 部品の在庫

部品表の SP（Supply code）欄に "o" で示される部品は在庫していないことがあり，納期が長くなることがあります。

5-2. Exploded Views

Overall

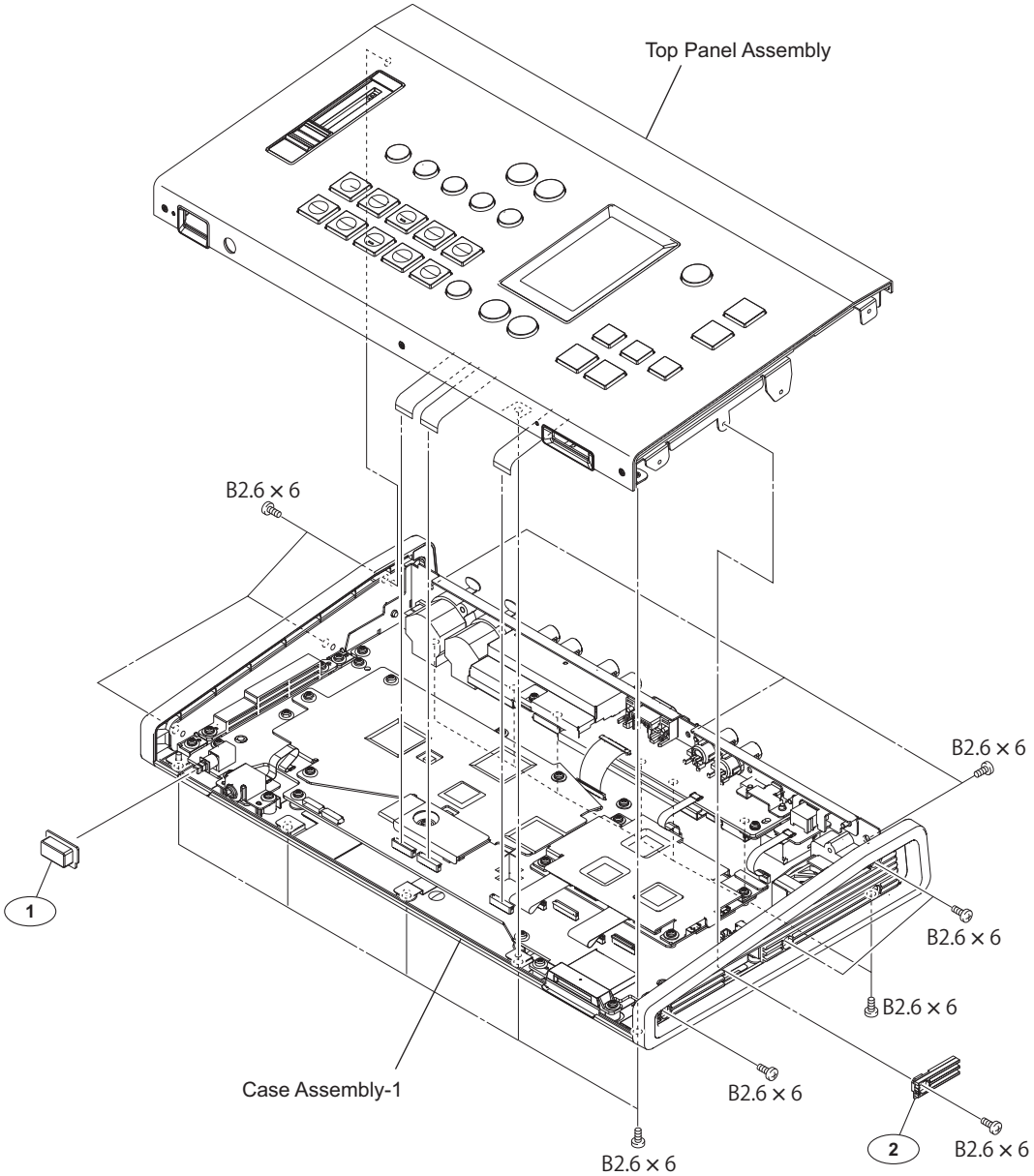

No.	Part No.	SP	Description
1	4-593-376-02	s	KNOB, POWER
2	4-593-378-01	s	LID, USB
	7-621-773-95	s	SCREW +B 2.6X6

Top Panel Assembly

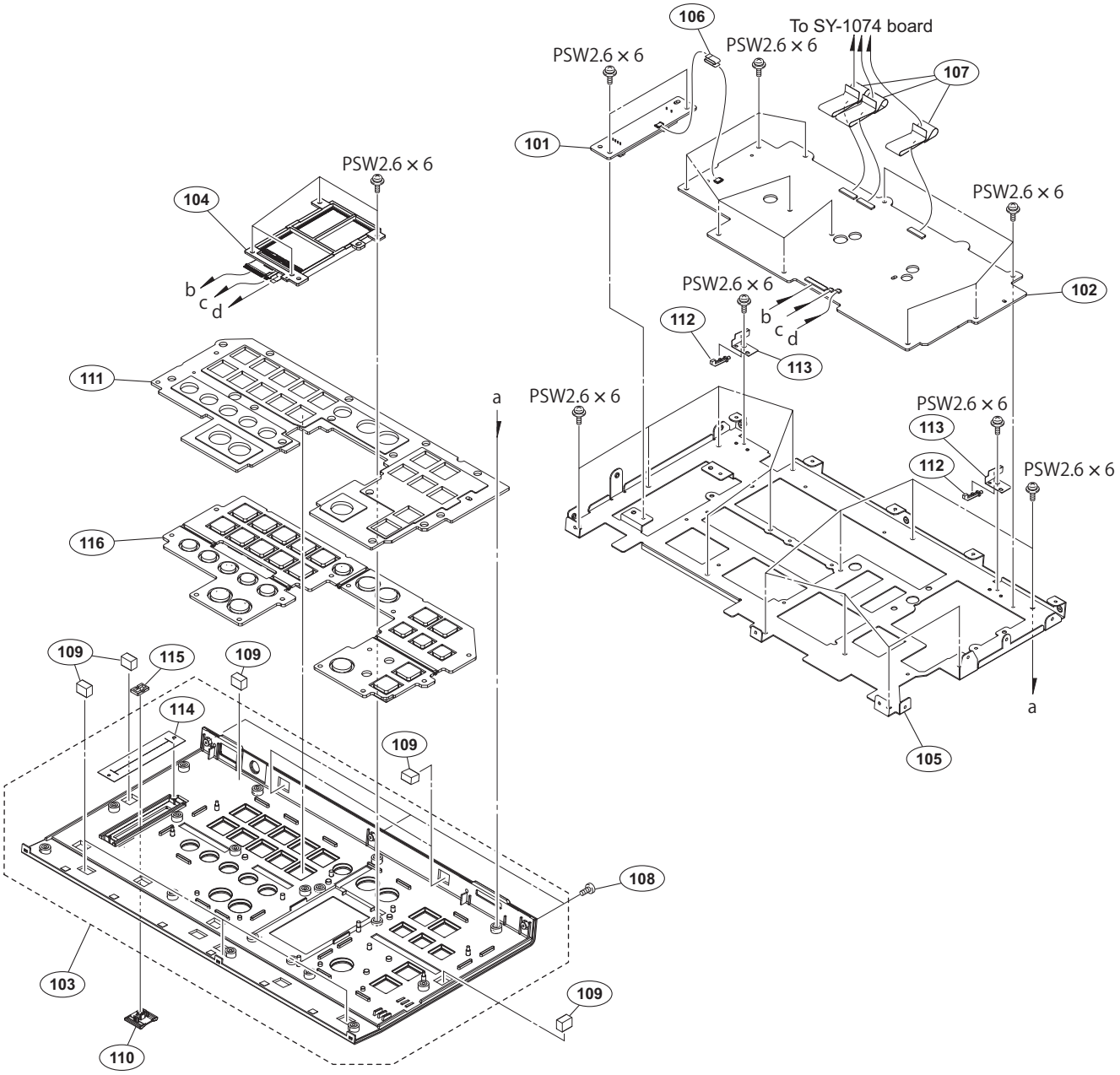

No.	Part No.	SP	Description
101	A-2143-719-A	s	MOUNT, VR-1002
102	A-2143-722-A	s	KY-1014 MOUNT
103	A-2179-841-A	s	TOP PLATE ASSY (SVC)
104	A-2179-842-A	s	LCD ASSY (SVC)
105	X-2593-427-1	s	PLATE ASSY, KY
106	1-837-240-11	s	FLEXIBLE FLAT CABLE (FFC-194)
107	1-846-007-11	s	CABLE, FLEXIBLE FLAT (FFC-1005)
108	3-080-203-42	s	SCREW (M2), NEW TRUSTER, P2
109	4-163-474-01	s	GASKET (MS (327))
110	4-593-380-02	s	KNOB, VR
111	4-593-389-01	s	GUARD, SHEET
112	4-593-391-02	s	LENS -A
113	4-593-392-01	s	PLATE, LENS
114	4-593-905-01	s	TAPE (VR)
115	4-598-188-01	s	VR LOCK
116	4-688-352-01	s	SHEET,KEY

No.	Part No.	SP	Description
	7-621-759-45	s	+PSW, 2.6X6

Case Assembly-1

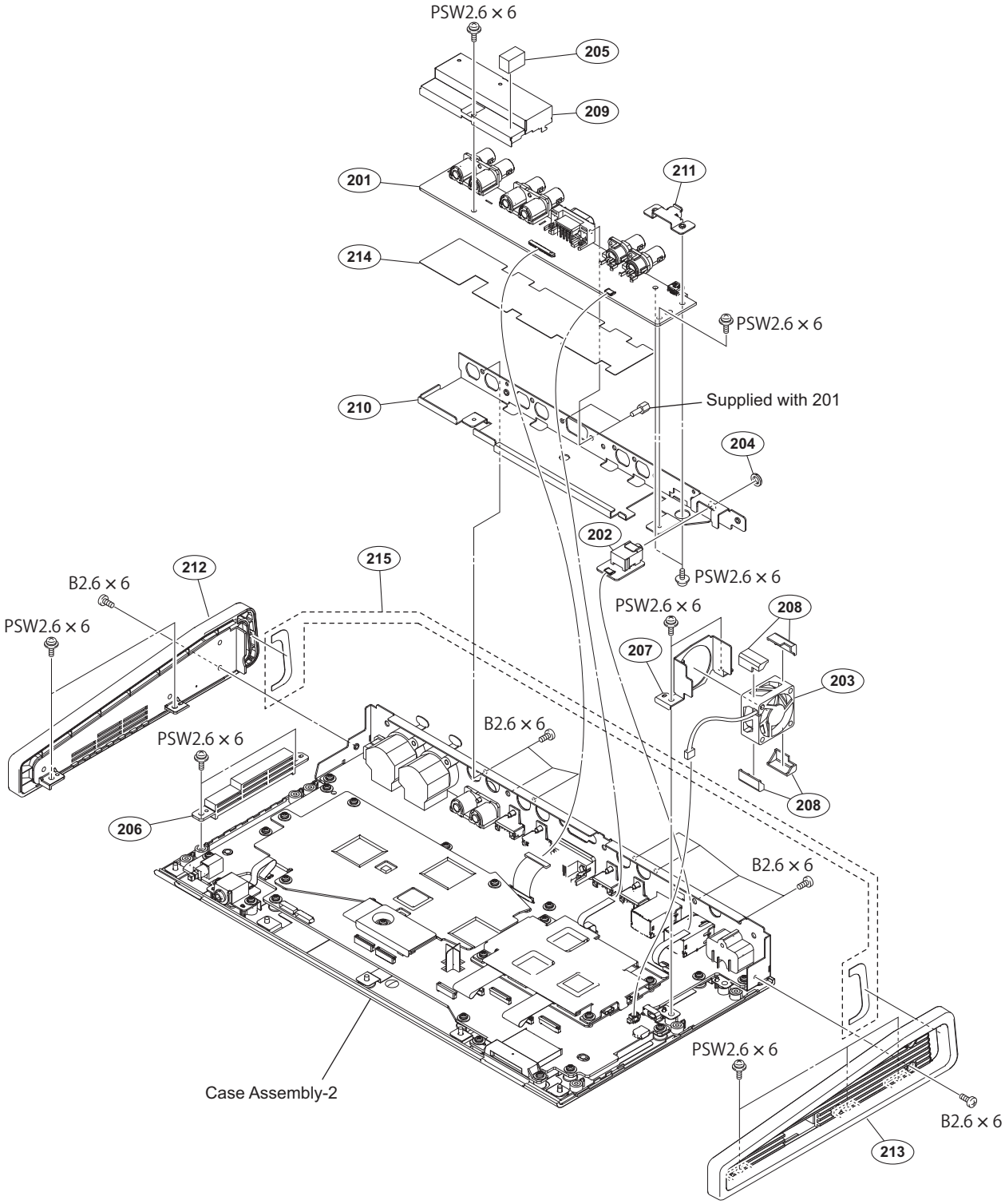

No.	Part No.	SP	Description
201	A-2143-723-A	s	IF-1010 MOUNT
202	A-2143-724-A	s	JK-1017 MOUNT
203	⚠ 1-855-096-31	s	DC FAN
204	3-061-234-01	s	NUT (M6X0.5)
205	4-163-474-01	s	GASKET (MS (327))
206	4-593-379-01	s	PANEL, BLIND
207	4-593-381-01	s	PLATE, FAN
208	4-593-382-01	s	HOLDER, FAN
209	4-593-398-01	s	PLATE, IF SHIELD

No.	Part No.	SP	Description
210	4-593-399-01	s	PLATE, IF
211	4-593-400-01	s	PLATE, USB
212	4-593-557-02	s	PANEL (L), SIDE
213	4-593-558-02	s	PANEL (R), SIDE
214	4-593-821-01	s	SHEET (IF)
215	4-688-353-01	s	SHEET,SIDE PANEL
	7-621-759-45	s	+PSW, 2.6X6
	7-621-773-95	s	SCREW +B 2.6X6

Case Assembly-2

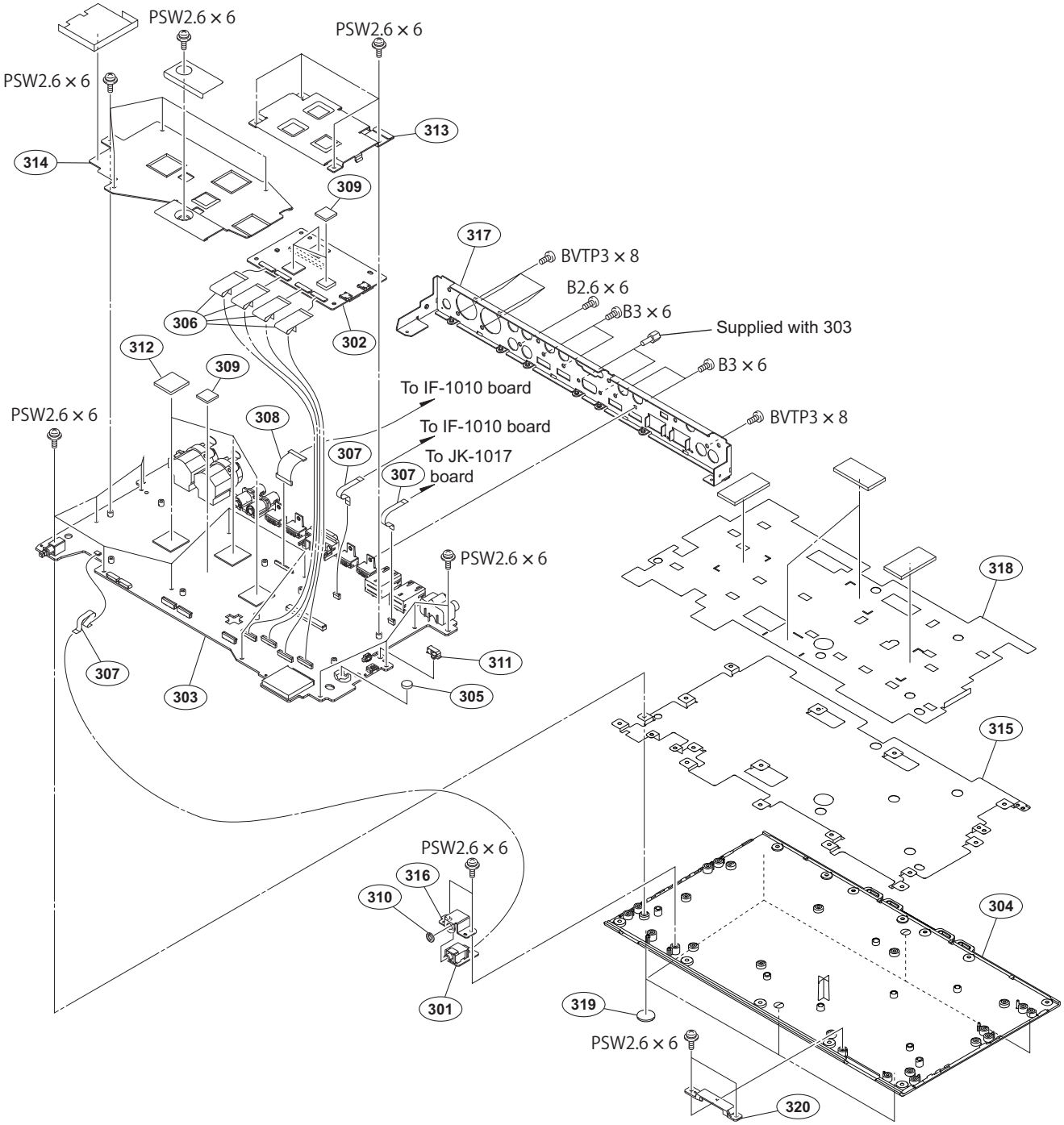

No.	Part No.	SP	Description
301	A-2143-724-A	s	JK-1017 MOUNT
302	A-2161-988-A	s	MU-1001 COMPLE
303	A-2161-989-A	s	SY-1074 COMPLE
304	X-2593-424-2	s	PANEL ASSY, BOTTOM
305	⚠ 1-756-135-32	s	BATTERY LITHIUM SECONDARY
306	1-835-013-12	s	FLEXIBLE FLAT CABLE (FFC-156)
307	1-837-240-11	s	FLEXIBLE FLAT CABLE (FFC-194)
308	1-965-708-11	s	HARNESS (DPR-EC)
309	2-891-149-01	s	SHEET (13X13X1.3)
310	3-061-234-01	s	NUT (M6X0.5)
311	4-098-036-01	s	SADDLE WIRE (A)
312	4-196-297-02	s	SHEET(D),RADIATION
313	4-593-374-01	s	HEAT SINK, MU
314	4-593-375-01	s	HEAT SINK, SY
315	4-593-377-01	s	PLATE, SY SHIELD
316	4-593-383-01	s	PLATE, HP
317	4-593-397-01	s	PLATE, REAR
318	4-593-788-01	s	SHEET (SY)
319	4-593-837-01	s	FOOT (A)
320	4-596-619-01	s	CARD GUIDE S
	7-621-759-45	s	+PSW, 2.6X6
	7-621-773-95	s	SCREW +B 2.6X6
	7-682-547-09	s	SCREW +B 3X6
	7-685-646-19	s	SCREW +BVTP 3X8 TYPE2 N-S

5-3. Supplied Accessories

Q'ty		Part No.	SP	Description
1pc	⚠	1-493-042-12	s	AC ADAPTOR
1pc		1-837-287-21	s	CORD, CONNECTION (USB 5P)
1pc		1-838-612-21	s	CORD, CONNECTION
1pc	⚠	1-846-103-82	s	CORD SET, POWER-SUPPLY [For CN]
1pc	⚠	4-689-391-01	s	(INSTRUCTION MANUAL)

Section 6
Diagrams

Overall
Overall (1/2)

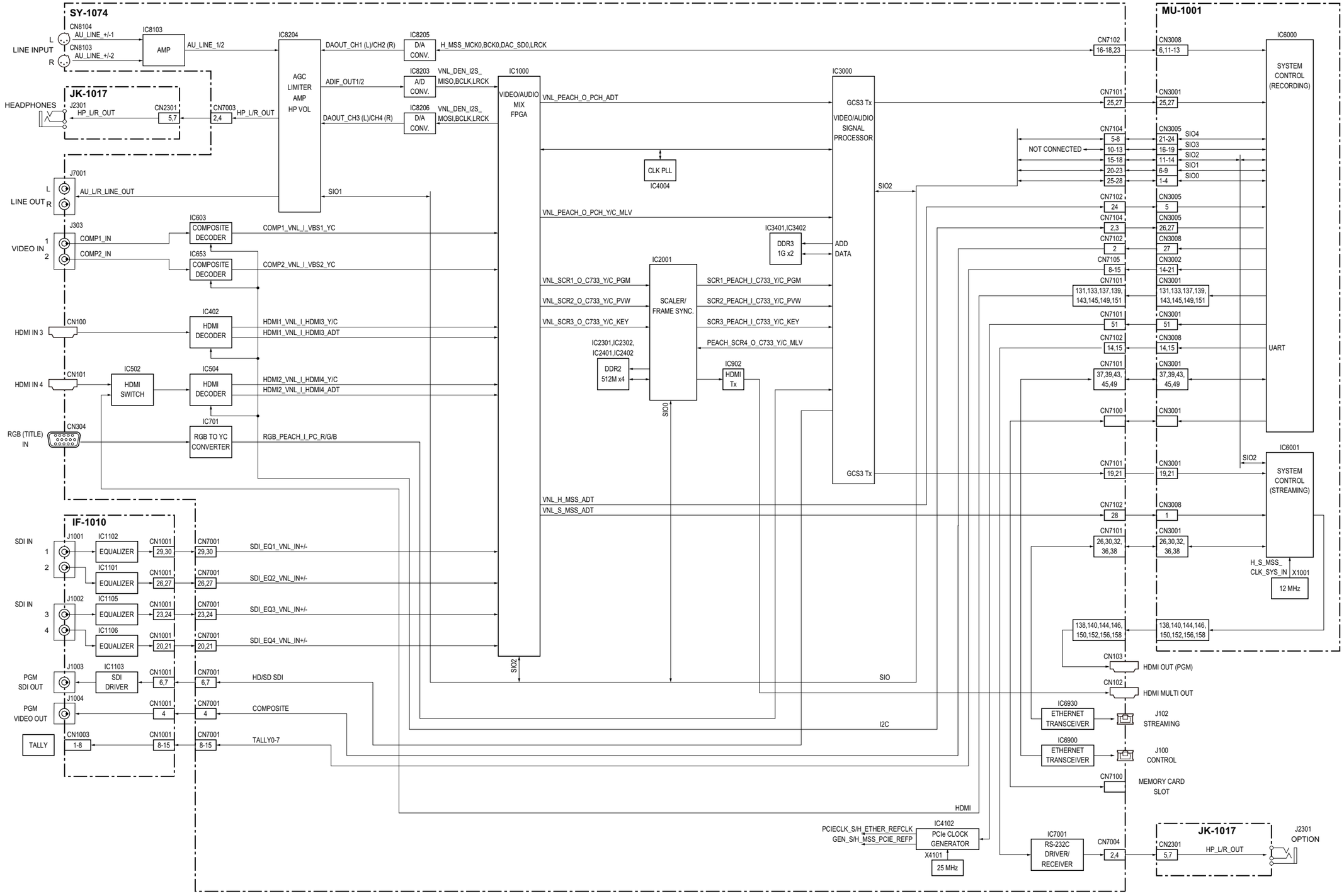

Overall (2/2)

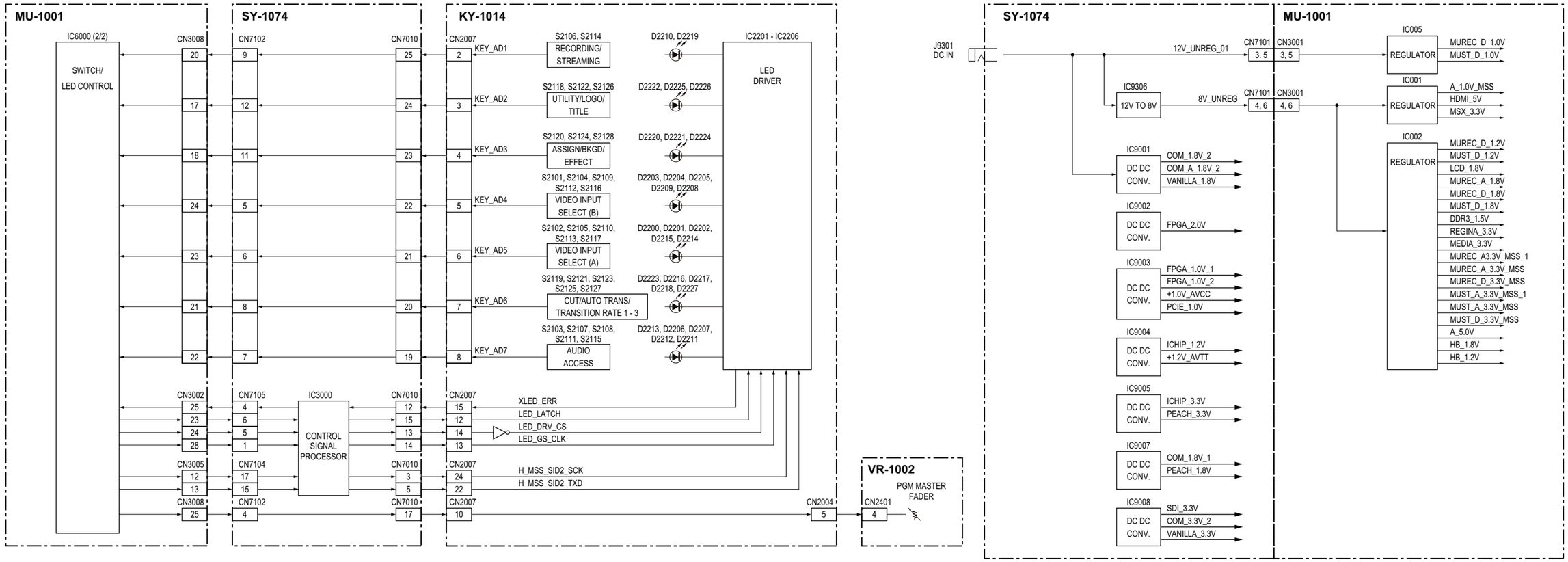
MU-1001
IC6000 (2/2)
SWITCH/
LED CONTROL
CN3008
SY-1074
CN7102
CN7010
KY-1014
CN2007
KEY_AD1
KEY_AD2
KEY_AD3
KEY_AD4
KEY_AD5
KEY_AD6
KEY_AD7
S2106, S2114
RECORDING/
STREAMING
S2118, S2122, S2126
UTILITY/LOGO/
TITLE
S2120, S2124, S2128
ASSIGN/BKGD/
EFFECT
S2101, S2104, S2109,
S2112, S2116
VIDEO INPUT
SELECT (B)
S2102, S2105, S2110,
S2113, S2117
VIDEO INPUT
SELECT (A)
S2119, S2121, S2123,
S2125, S2127
CUT/AUTO TRANS/
TRANSITION RATE 1 - 3
S2103, S2107, S2108,
S2111, S2115
AUDIO
ACCESS
D2210, D2219
D2222, D2225, D2226
D2220, D2221, D2224
D2203, D2204, D2205,
D2209, D2208
D2200, D2201, D2202,
D2215, D2214
D2223, D2216, D2217,
D2218, D2227
D2213, D2206, D2207,
D2212, D2211
IC2201 - IC2206
LED
DRIVER
CN3002
CN7105
IC3000
CN7010
CN2007
CONTROL
SIGNAL
PROCESSOR
XLED_ERR
LED_LATCH
LED_DRV_CS
LED_GS_CLK
CN3005
CN7104
H_MSS_SID2_SCK
H_MSS_SID2_TXD
CN3008
CN7102
CN2007
CN2004
VR-1002
PGM MASTER
FADER
CN2401
J9301
DC IN
SY-1074
MU-1001
12V_UNREG_01
CN7101
CN3001
IC005
REGULATOR
MUREC_D_1.0V
MUST_D_1.0V
IC9306
12V TO 8V
8V_UNREG
IC001
REGULATOR
A_1.0V_MSS
HDMI_5V
MSX_3.3V
IC002
REGULATOR
MUREC_D_1.2V
MUST_D_1.2V
LCD_1.8V
MUREC_A_1.8V
MUREC_D_1.8V
MUST_D_1.8V
DDR3_1.5V
REGINA_3.3V
MEDIA_3.3V
MUREC_A3.3V_MSS_1
MUREC_A_3.3V_MSS
MUREC_D_3.3V_MSS
MUST_A_3.3V_MSS_1
MUST_A_3.3V_MSS
MUST_D_3.3V_MSS
A_5.0V
HB_1.8V
HB_1.2V
IC9001
DC DC
CONV.
COM_1.8V_2
COM_A_1.8V_2
VANILLA_1.8V
IC9002
FPGA_2.0V
IC9003
FPGA_1.0V_1
FPGA_1.0V_2
+1.0V_AVCC
PCIE_1.0V
IC9004
ICHIP_1.2V
+1.2V_AVTT
IC9005
ICHIP_3.3V
PEACH_3.3V
IC9007
COM_1.8V_1
PEACH_1.8V
IC9008
SDI_3.3V
COM_3.3V_2
VANILLA_3.3V

Frame Wiring

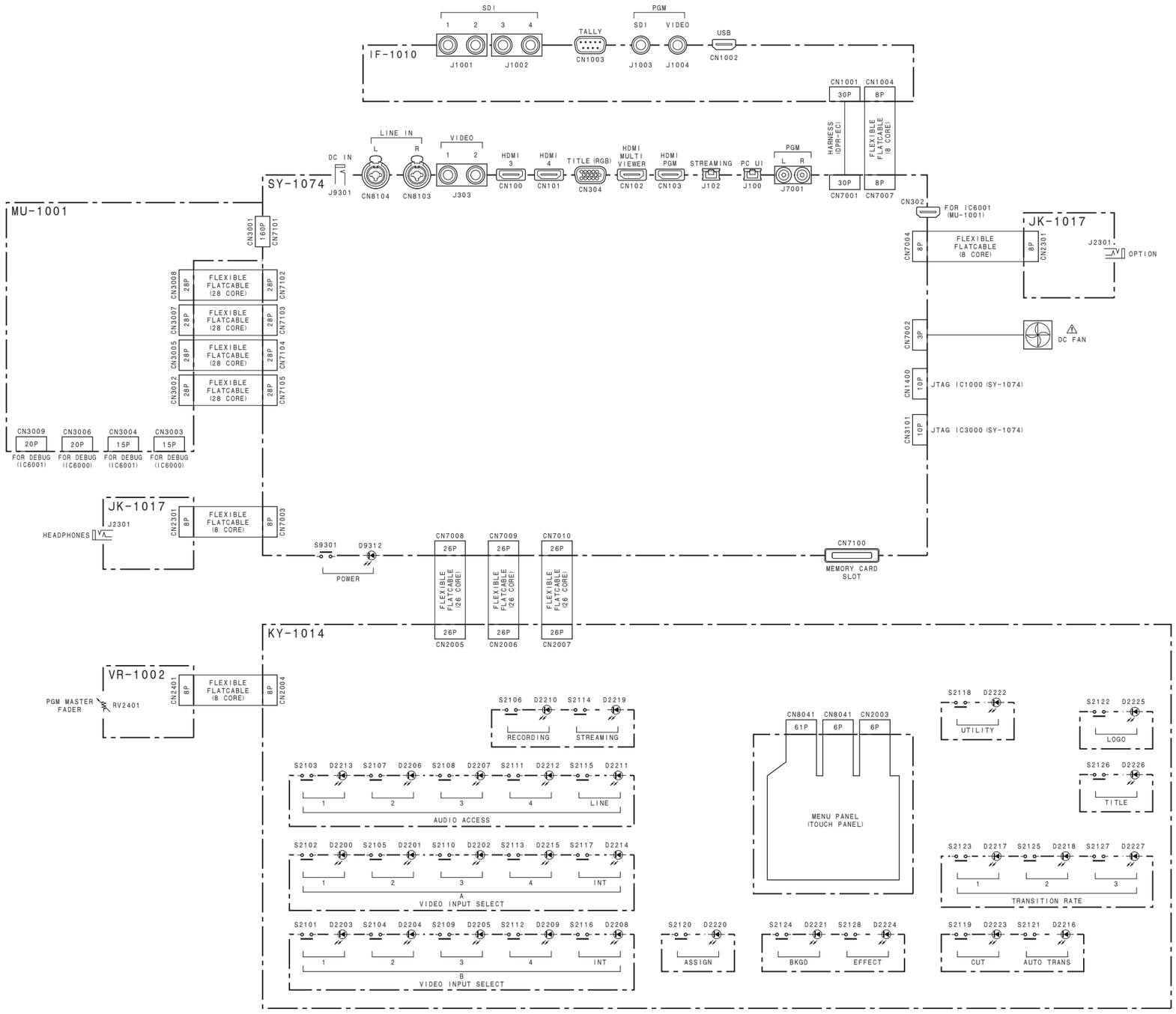

Revision History

Date	History	Contents
2017. 1	1st Edition 9-932-531-01	—
2017. 12	Revised-1 9-932-531-02	Additions: 2. Troubleshooting 4. Error Message

MCX-500 (SY)
MCX-500 (CN) J, E
9-932-531-02

Sony Corporation

Printed in Japan
2017. 12 08
© 2017