Electrolux Service Training
Spring 2008

Electrolux

SAFE SERVICING PRACTICES - ALL APPLIANCES

To avoid personal injury and/or property damage, it is important that **Safe Servicing Practices** be observed. The following are some limited examples of safe practices:

1. **DO NOT** attempt a product repair if you have any doubts as to your ability to complete it in a safe and satisfactory manner.

2. Before servicing or moving an appliance:
   - Remove the power cord from the electrical outlet, trip the circuit breaker to the OFF position, or remove the fuse.
   - Turn off the gas supply.
   - Turn off the water supply.

3. Never interfere with the proper operation of any safety device.

4. **USE ONLY REPLACEMENT PARTS CATALOGED FOR THIS APPLIANCE. SUBSTITUTIONS MAY DEFEAT COMPLIANCE WITH SAFETY STANDARDS SET FOR HOME APPLIANCES.**

5. **GROUNDING**: The standard color coding for safety ground wires is **GREEN**, or **GREEN** with **YELLOW STRIPES**. Ground leads are not to be used as current carrying conductors. It is **EXTREMELY** important that the service technician reestablish all safety grounds prior to completion of service. Failure to do so will create a hazard.

6. Prior to returning the product to service, ensure that:
   - All electrical connections are correct and secure
   - All electrical leads are properly dressed and secured away from sharp edges, high-temperature components, and moving parts
   - All non-insulated electrical terminals, connectors, heaters, etc. are adequately spaced away from all metal parts and panels
   - All safety grounds (both internal and external) are correctly and securely connected
   - All panels are properly and securely reassembled

ATTENTION!!!

This service manual is intended for use by persons having electrical and mechnical training and a level of knowledge of these subjects generally considered acceptable in the appliance repair trade. Electrolux Home Products cannot be responsible, nor assume any liability, for injury or damage of any kind arising from the use of this manual.

Table of Contents

2008 Service Provider Contact Information

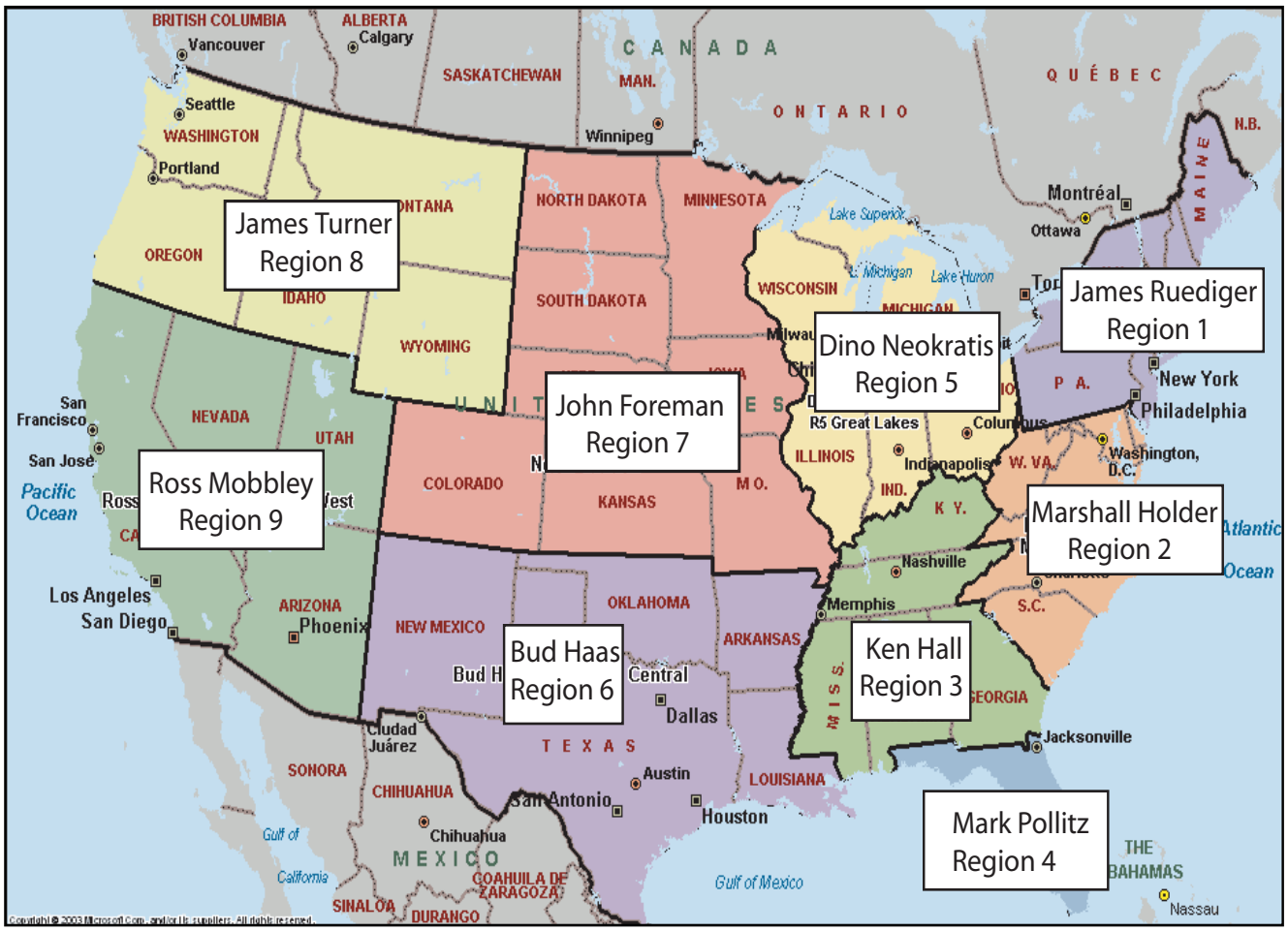

#Region	First Name	Last Name	Office Phone	E Mail
1. North East	James	Ruediger	717-763-4342	james.ruediger@electrolux.com
2. Mid Atlantic	Marshall	Holder	864-576-2528	marshall.holder@electrolux.com
3. South	Ken	Hall	770-784-5972	ken.hall@electrolux.com
4. Florida	Mark	Pollitz	386-868-2884	mark.pollitz@electrolux.com
5. Great Lakes	Dino	Neokratis	847-695-1971	dino.neokratis@electrolux.com
6. South Central	Bud	Haas	817-795-0221	bud.haas@electrolux.com
7. North Central	John	Foreman	402-991-5920	john.foreman@electrolux.com
8. North West	James	Turner	360-886-5268	james.turner@electrolux.com
9. South West	Ross	Mobbley	707-450-0157	ross.mobbley@electrolux.com

Electrolux Product Warranty Information

Refrigerators/Freezers

Limited One-Year Warranty

Every Electrolux Major Appliances refrigerator and freezer is guaranteed to be free of materials defects or component malfunctions. Excludes original and replacement ice and water filters. Electrolux Major Appliances will repair, without charge, any problem that occurs during the first year after original date of purchase.*

Limited 2nd - 5th Year Warranty

Cabinet Liner, Refrigerating Systems

Electrolux Major Appliances will provide a replacement for any defective part(s) and labor for the cabinet liner and/or sealed refrigerator systems that break due to defects in materials or workmanship (not customer abuse), for the second through fifth years from original date of purchase.* Transportation costs required because of service and any expenses incurred while making the refrigerator accessible for servicing, such as removal of trim, cupboards, shelves, etc. are the responsibility of the consumer.

Ice Makers

Limited One-Year Warranty

Every Electrolux Major Appliances ice maker is guaranteed to be free of materials defects or component malfunctions. Electrolux Major Appliances will repair, without charge, any problem that occurs during the first year after original date of purchase.*

Limited 2nd - 5th Year Warranty

Sealed System

Electrolux Major Appliances will provide a replacement for any defective part(s) and labor for the sealed refrigeration system (compressor, condenser, evaporator, dryer or tubing) that breaks due to defects in materials or workmanship (not customer abuse), for the second through fifth years from original date of purchase.* Transportation costs required because of service and any expenses incurred while making the refrigerator accessible for servicing, such as removal of trim, cupboards, shelves, etc. are the responsibility of the consumer.

** Some restrictions may apply for Alaska.*

These warranties are provided by Electrolux Major Appliances North America, a division of Electrolux Home Products Inc. in the U.S.A., and in Canada by Electrolux Canada Corp. *For complete warranty details, please refer to your Owner's Manual.*

High standards of quality at Electrolux Major Appliances mean we are constantly working to improve our products. We reserve the right to change specifications or discontinue models without notice.

Ranges

Limited One-Year Warranty

Every Electrolux Major Appliances range is guaranteed to be free of materials defects or component malfunctions. Electrolux Major Appliances will repair, without charge, any problem that occurs during the first year after original date of purchase.*

Built-In Ovens

Limited One-Year Warranty

Every Electrolux Major Appliances built-in oven is guaranteed to be free of materials defects or component malfunctions. Electrolux Major Appliances will repair, without charge, any problem that occurs during the first year after original date of purchase.*

Warmer Drawers

Limited One-Year Warranty

Every Electrolux Major Appliances warmer drawer is guaranteed to be free of materials defects or component malfunctions. Electrolux Major Appliances will repair, without charge, any problem that occurs during the first year after original date of purchase.*

Ventilation

Limited One-Year Warranty

Every Electrolux Major Appliances ventilation product is guaranteed to be free of materials defects or component malfunctions. Electrolux Major Appliances will repair, without charge, any problem that occurs during the first year after original date of purchase.*

** Some restrictions may apply for Alaska.*

Cooktops

Limited One-Year Warranty

Every Electrolux Major Appliances gas and electric cooking product is guaranteed to be free of materials defects or component malfunctions. Electrolux Major Appliances will repair, without charge, any problem that occurs during the first year after original date of purchase.*

Limited 2nd - 5th Year Warranty

Glass Cooktop or Electric Element

Electrolux Major Appliances will provide a replacement glass cooktop or electric element that breaks due to defects in materials or workmanship (not customer abuse), for the second through fifth years from original date of purchase.* Transportation and all labor cost required because of service and any expenses incurred while making the cooktop accessible for servicing, such as removal of trim, cupboards, shelves, etc. are the responsibility of the consumer.

Dishwashers

Limited One-Year Warranty

Every Electrolux Major Appliances dishwasher is guaranteed to be free of materials defects or component malfunctions. Electrolux Major Appliances will repair, without charge, any problem that occurs during the first year after original date of purchase.*

Limited 2nd - 5th Year Warranty

Electronic Controls and Nylon TufRacks

Electrolux Major Appliances will provide a replacement for any defective part(s) for the electronic control module or in the original upper or lower nylon-coated TufRack, if it peels or rusts due to defects in materials or workmanship (not customer abuse), for the second through fifth years from original date of purchase.* Diagnostic, transportation, and labor costs that are required because of service are the responsibility of the consumer.

Limited Lifetime Warranty

Electrolux Major Appliances will provide a replacement for any defective part(s) in the tub or door liner if the original fails to contain water due to defects in materials or workmanship (not customer abuse), during the lifetime of the product.* Diagnostic, transportation, and labor costs that are required because of service are the responsibility of the consumer.

Wine Coolers

Limited One-Year Warranty

Every Electrolux Major Appliances wine cooler is guaranteed to be free of materials defects or component malfunctions. Electrolux Major Appliances will repair, without charge, any problem that occurs during the first year after original date of purchase.*

Limited 2nd - 5th Year Warranty

Sealed System

Electrolux Major Appliances will provide a replacement for any defective part(s) and labor for the sealed refrigeration system (compressor, condenser, evaporator, dryer or tubing) that breaks due to defects in materials or workmanship (not customer abuse), for the second through fifth years from original date of purchase.* Transportation costs required because of service and any expenses incurred while making the refrigerator accessible for servicing, such as removal of trim, cupboards, shelves, etc. are the responsibility of the consumer.

Microwave Ovens

Limited One-Year Warranty

Every Electrolux Major Appliances microwave oven is guaranteed to be free of materials defects or component malfunctions. Electrolux Major Appliances will repair, without charge, any problem that occurs during the first year after original date of purchase.*

Limited 2nd - 5th Year Warranty

Magnetron Tube

Electrolux Major Appliances will provide a replacement part for any defective magnetron tube that breaks due to defects in materials or workmanship (not customer abuse), for four years after original date of purchase.* Diagnostic, transportation, and labor costs that are required because of service are the responsibility of the consumer.

The Electrolux Group

USA • 250 Bobby Jones Expressway • Augusta, GA 30907
1-877-4electrolux (1-877-435-3287) • **www.electroluxappliances.com**

CANADA • 5855 Terry Fox Way • Mississauga, ON L5V 3E4
1-800-265-8352 • **www.electroluxca.com**

High standards of quality at Electrolux Major Appliances mean we are constantly working to improve our products. We reserve the right to change specifications or discontinue models without notice.

NSF Protocol for Sanitization and Cleaning Performance of Household Spray-Type Dishwashers (1997)

CHANGE FOR THE BETTER WITH ENERGY STAR

Form No. EMACSEF07 10/07 Printed in the U.S.A.

Electrolux

FREESTANDING ELECTRIC RANGE PRODUCT TRAINING SECTION

MODELS - EW30EF65G , EI30EF55G

Wave-Touch™

IQ Touch™

Consistently following a standard routine when servicing appliances will insure that you do not waste time searching for a complex solution to a simple problem. One of the most common mistakes made by service technicians is failing to verify the incoming power supply to the appliance.

Many times electronic controls and other components are replaced unnecessarily because the incoming power supply was not verified. When testing the electrical supply the test should be performed at the terminal block where the power cord or house wiring attaches to the appliance. Verify that there are 240 volts between L1 & L2 and that there is 120 volts from L1 to Neutral and also from L2 to Neutral. You should also check the power supply while the appliance is operating or "under load". The power supply may check good with the product sitting idle but fail when certain components are turned on. This can be caused by a weak connection in the customer's house wiring, or a faulty circuit breaker or fuse.

Another common mistake is failure to verify all component part wire harness connections. It is essential that all component connections be checked visually and with the appropriate circuit tester. Many times components are assumed to be faulty because they do not operate or there is an error code displayed by the electronic control system. Often the failure is caused by a loose or miswired connection which can cause the same error code as a defective component part. Newly installed appliances may have loose connections resulting from shipping and handling conditions or improper installation. Check the wiring connections before you order replacement parts.

When the repair has been completed the product should be thoroughly tested to verify that the service performed corrected the problem and that all of the other features and functions of the product are in proper working order. The extra time taken to do this will create consumer confidence in your efficiency and professionalism as well as possibly saving an expensive callback.

SERVICE TOOLS AND EQUIPMENT

In addition to standard hand tools such as wrenches, screwdrivers, pliers, etc; the following instruments are considered to be essential equipment for technicians servicing Electrolux cooking products. Proper testing and diagnostic procedures are not possible without these tools.

- Volt/ohmmeter - Must be capable of voltage measurement from 0 to 500 volts AC and resistance measurements from 0 to 2 meg-ohms. This usually requires a meter that utilizes a 9 volt battery. Either digital or analog meters are acceptable however most technicians find analog meters easier to use. Appropriate test leads and tips are required to test certain electronic components and connections.
- Clamp on amp meter - Should be capable of measuring from 0 to 60 amps.
- Temperature Meter - Should be high quality with thermocouple or electronic "K-type" test probe. Capable of temperature readings up to 1000 degrees Fahrenheit.

Additional instruments that a technician will need to have access to at various times include the following:

- Combustible gas leak detection meter.
- U tube manometer or equivalent testing device for measuring LP and Natural gas line pressure on gas ranges. Measurements must be in IWC (inches water column)
- Carbon Monoxide (CO) detection meter capable of measuring from 0-1000 PPM.
- Microwave Leak Detection Meter

Range Technical Data

Maximum Allowable Surface Temperatures

All gas and electric ranges must comply with U.L and A.N.S.I. surface temperature limits outlined in the following chart. Note that the testing temperature is different for electric ranges produced *after* 08/26/2003.

SURFACE TEMPERATURE LIMITS
1. Product must be undamaged, correctly assembled and have the correct oven temperature.
2. All skin temperatures are based on a room temperature of 77° F (25° C) and an oven set temperature as specified below: For ELECTRIC ranges built prior to 08/26/2003 - 400° F For ELECTRIC ranges built after 08/26/2003 - 475° F For GAS ranges built prior to 01/01/2004 - 400° F For GAS ranges built after 01/01/2004 - 475° F
3. Oven must be cycling at designated test temperature for one hour before test is conducted.
4. Pyrometers, (temperature testers), must be of high quality and properly adjusted.
5. An increase or decrease of 1° F in the room ambient temperature, will allow a 1° F increase or decrease in the maximum allowable surface temperature of the range.

	MATERIAL TYPE / FINISH				
	PAINTED	PORCELAIN	GLASS	PLASTIC†	METAL
LOCATION					
Side Panel	152° F	160° F	—	—	—
Oven Door	152° F	160° F	172° F	182° F	—
Warmer Drawer Front Panel	152° F	160° F	—	—	—
Knobs & Handles	—	—	—	*167° F **182° F	131° F **152° F
Skirt	—	—	—	*182° F	*152° F
Cooktop Lower Console Oven Vent Area	NO TEMPERATURE LIMITS APPLY TO THIS AREA				

† Includes plastic with metal plating not more than 0.005" thick and metal with a plastic covering not less than 0.005" thick.

* Self-Clean Gas Range at Clean Temperature
** Self-Clean Electric Range at Clean Temperature

RTD Temperature / Resistance Chart

The chart seen here can be used to test the resistance of the oven temperature sensor probe. For accuracy in testing use a high quality thermometer or temperature meter to determine actual oven temperature before reading the resistance of the probe.

RTD SCALE	
TEMPERATURE °F	RESISTANCE Ω
32 ± 1.9	1000 ± 4.0
75 ± 2.5	1091 ± 5.3
250 ± 4.4	1453 ± 8.9
350 ± 5.4	1654 ± 10.8
450 ± 6.9	1852 ± 13.5
550 ± 8.2	2047 ± 15.8
650 ± 13.6	2237 ± 18.5
900 ± 13.6	2697 ± 24.4

Electric Range Component Resistance Chart

NOTE: RESISTANCE MEASUREMENTS ARE APPROXIMATE. VARIATIONS DUE TO TEMPERATURE CHANGES AND OTHER FACTORS ARE NORMAL.

COMPONENT	VOLTAGE RATING	WATTAGE	RESISTANCE Ω (OHMS)
WARMER DRAWER ELEMENT	108 / 132	700	20.5 Ω
WARMER DRAWER ELEMENT	108 / 132	450	32 Ω
MINI OVEN ELEMENT	108 / 132	1000	14 Ω
CONVECTION ELEMENT	108 / 132	350	40 Ω
CONVECTION ELEMENT	108 / 132	200	72 Ω
CONVECTION FAN MOTOR WINDINGS	108 / 132		35 Ω
LOCK MOTOR WINDINGS	108 / 132		2000 Ω
OVEN TEMPERATURE SENSOR PROBE (AT ROOM TEMPERATURE)	-		1100 Ω * *(REFER TO RTD CHART)

ES 610/615 Oven Relay Board Circuit Analysis Matrix							
Relay Contacts		P4 (R) to P2 (O)	P6 (BK) to P10 (Y)	P6 (BK) to P8 (BL)	P6 (BK) to P12 (Y/BK)	**J4**/3 (BK) to **J4**/5 (V)	**J4**/3 (BK) to **J4**/6 (BR)
Component		L2 Out Relay	Bake Element	Broil Element	Lower Oven Element	Convection Element	Door Lock Motor
OPERATION	Bake / Time Bake	X	X			P	
	Convection Bake/Roast	X	X			X	
	Broil			X			
	Dehydrate	X	X			X	
	Bread Proof					X	
	Slow Cook	X	X				
	Keep Warm (Upper Oven)	X	X				
	Keep Warm (Lower Oven)				X		
	Bake (Lower Oven) *				X		
	Door Lock Motor Locking/Unlocking						X
	Clean	X	X				

X = Contact Closed P = Contact closed during Pre-Heat only
*Some Models

EOC Signal Voltage Test Matrix		
Test for 3.3 VDC (+/- .5 volts) between GND on EOC circuit board and the indicated connector pin when the specified function is activated.		
FREESTANDING ELECTRIC "A" & "B" MODELS, and DUAL FUEL MODELS		
FUNCTION / RELAY	EOC CONNECTOR / PIN#	RELAY BOARD CONNECTOR / PIN #
Mini Oven or Warmer Drawer / K3	P9 / Pin 7	J5 / Pin 7
L2 Out / K2	P11 / Pin 4	J7 / Pin4
Broil / K4	P11 / Pin 1	J7 / Pin 1
Bake / K6	P11 / Pin 2	J7 / Pin 2
Convection Element / K10	P11 / Pin 5	J7 / Pin 5
Lock Motor / K12	P11 / Pin 6	J7 / Pin 6

Range Technical Data

Variable Speed Control Board

VSC Test Points.
Connector P6 pins 1 & 6 - 5 vdc
Connector P2 Pins 3 & 5 - 120 vac

		RELAY CONTACTS	
		P2/5 (BK) to **P2**/1 (Tan)	**P2**/5 (BK) to **P2**/7 (Pink)
OPERATION	Oven Lamps	X	
	Convection Fan Mtr.		X

X = Contact Closed

NOTE: All voltages are approximate.

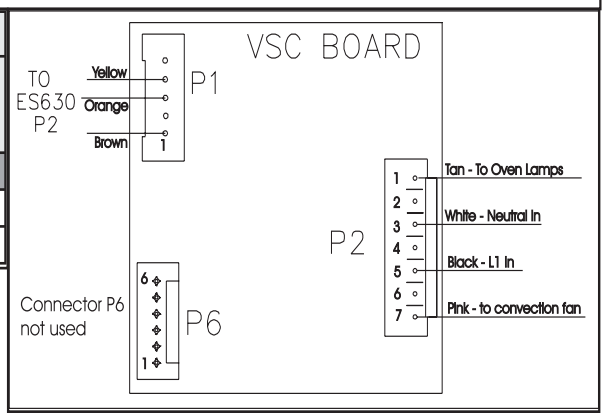

Power Supply Board

Power Supply Board (PS1 or PS2) Test Points
Connector P1 pins 1 & 4 - 120 vac
Connector P2 pins 1 & 5 - 8 vdc

NOTE: All voltages are approximate.

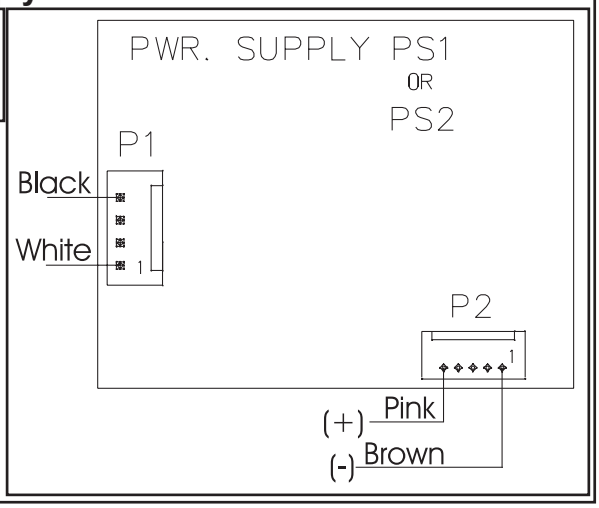

Terms and Abbreviations

TECHNICAL TERMS

EOC = ELECTRONIC OVEN CONTROL
GND = GROUND
LED = LIGHT EMITTING DIODE
RTD = RESISTANCE TEMPERATURE DEVICE (Temperature Sensor Probe)
VSC = VARIABLE SPEED CONTROL
TST = TOUCH SENSOR TECHNOLOGY (Refers to glass touch control panel)

SALES/MARKETING TERMS

Perfect Pair™ = Lower oven in the drawer below the main oven. Also called a Mini Oven.
IQ Touch™ = Control panel display style found on “B” model ranges.
Wave-Touch™ = Control panel display style found on “A” model ranges.

ES630 EOC Failure/Fault Codes

For each Fault code there is a listing of the likely failure condition or cause, as well as suggested corrective actions to be taken. Perform the steps one at a time in the order listed below to correct the specific failure condition.

Note: Fault codes are not a foolproof system. Never assume that a part has failed based on a displayed fault code. An example would be if the EOC is displaying F30 (open sensor), the failure could be caused by a loose connection or faulty wire harness between the EOC and sensor or the sensor could simply be unplugged.

FAULT CODE	LIKELY FAILURE CONDITION/CAUSE	SUGGESTED CORRECTIVE ACTION
F10	Runaway Temperature. Oven heats when no cook cycle is programmed.	1. Check RTD Sensor Probe using the RTD scale found in the tech sheet. Replace if defective. 2. If oven is overheating dsiconnect power from the range and unplug connector P1 from power supply board 1. Reapply power to the range. If oven continues to heat when the power is reapplied, replace the oven relay board. 3. Replace the EOC NOTE: Severe overheating may require the entire oven to be replaced should damage be extensive.
F11	Shorted Keypad	1. Reset power supply to range to see if failure code will clear. 2. Check/reseat ribbon harness connections between TST panel and EOC. 3. Replace the TST panel 4. Replace the EOC
F13	Internal software error in EOC	Disconnect power, wait 30 seconds and reapply power. If fault returns upon power-up, replace EOC.
F14	TST Display tail missing or not connected	1. Check/reseat ribbon harness connections between TST panel and EOC. 2. Replace the TST panel 3. Replace the EOC
F15	Signal loss between oven relay board and EOC	1. Test the harness and connections from EOC connector P16 to oven relay board J2. 2. Replace the oven relay board 3. Replace the EOC
F20 **Electric Models Only**	Communication failure between EOC and ESEC	1. Test wiring harness and connections between EOC connector P2 and ESEC 30 UIB P9 2. Test wiring harness and connections between ESEC 30 UIB and ESEC 20 relay board 3. Test wiring harness and connections between PS board 2 (P2) and ESEC 30 UIB connector P7 4. Test for approximately 9 volts DC output from PS board 2 at ESEC 30 UIB connector P7, pins 1 & 5. If output voltage is incorrect test incoming power supply to PS board 2 at harness connector P1 pins 1 & 4. If incoming power is correct (120 VAC) replace PS board 2. If output voltage is correct replace ESEC 30 UIB 5. Replace EOC
F23 F25	Communication failure between VSC board and EOC	1. Check harness and connections between VSC board and EOC. 2. Test for approximately 5 volts DC to VSC board at P6 connector pins 1 & 6. If voltage is correct replace VSC board. If voltage is incorrect replace EOC.
F30 F31	Open probe connection. Shorted Probe connection	1. (F30 or F31) Check resistance at room temperature & compare to RTD Sensor resistance chart. If resistance does not match the RTD chart replace RTD Sensor Probe. Check Sensor wiring harness between EOC & Sensor Probe connector. 2. (F30 or F31) Check resistance at room temperature, if less than 500 ohms, replace RTD Sensor Probe. Check for shorted Sensor Probe harness between EOC & Probe connector.
F90	Door lock motor latch failure	***If latch motor does not run*** when clean cycle is selected: 1. Check to see if latch motor coil is open. If open, replace latch motor assembly. 2. Test for 120 volts to the terminals of the latch motor. If voltage is correct and motor does not run replace latch motor assembly. If voltage is not correct replace EOC. ***If latch motor runs*** when clean cycle is selected. 1. Check the wiring harness between EOC & latch motor switch. Repair or replace harness as needed. 2. Test operation of the switch contacts. Replace latch motor assembly if defective. 3. Check for binding of the latch cam, latch motor rod & latch motor cam. 4. If all situations above do not solve problem, replace EOC.

ESEC 30 Troubleshooting Guide-A Models

SYMPTOM	LIKELY FAILURE CONDITION/CAUSE	SUGGESTED CORRECTIVE ACTION
Control Beeping No Error Codes Displayed	ESEC key display ribbon cable is disconnected or defective	1. Check/reseat ribbon connection J3 connection on the ESEC 30 UIB. 2. Replace ESEC 30 UIB. 3. Replace TST panel.
" E " In Displays	ESEC key display ribbon cable is disconnected or defective	1. Check/reseat ribbon connection J2 connection on the ESEC30 UIB. 2. Replace ESEC 30 UIB. 3. Replace TST panel.
"E 11" In Displays	Shorted Keypad	1. Reset power supply to range to see if failure code will clear. 2 Check/reseat ribbon harness and connectors between the TST panel and ESEC 30 UIB. 3. Replace the TST panel 4. Replace the ESEC 30 UIB
" E 14 " In Displays	ESEC key read ribbon cable is disconnected or defective	1. Check/reseat ribbon connection J4 connection on the ESEC 30 UIB. 2. Replace ESEC 30 UIB. 3. Replace TST panel.
" E 15 " In Displays	Signal loss between ESEC 30 UIB and ESEC relay board.	1. Check/reseat harness and connections between connector P6 of ESEC30 UIB to connector J2 of ESEC relay board. Repair or replace harness as needed. 2. If connection and harness are good. then replace ESEC relay board. 3. If error remains ESEC30 UIB.

SYMPTOM	LIKELY FAILURE CONDITION/ CAUSE	SUGGESTED CORRECTIVE ACTION
Control Beeping & Center Burner Only LED's Flashing	ESEC key display ribbon cable is disconnected or defective	1. Check/reseat ribbon connection J3 connection on the ESEC 30 UIB. 2. Replace ESEC 30 UIB. 3. Replace TST panel.
Control Beeping & Left Side Burners Only LED's Flashing	ESEC key display ribbon cable is disconnected or defective	1. Check/reseat ribbon connection J2 connection on the ESEC30 UIB. 2. Replace ESEC 30 UIB. 3. Replace TST panel.
Control Beeping & All Burners LED's Flashing	**E11 Failure Mode -** Shorted Keypad ***or*** **E14 Failure Mode -** ESEC key read ribbon cable is unplugged or defective ***or*** **E15 Failure Mode -** Internal ESEC error ***or*** Signal loss between ESEC 30 UIB and ESEC relay board.	Turn off power to range for 30 seconds then reapply power. Does error return within 5 seconds ? **YES**: Go to **Solution A** **NO**: Does error return after 30 seconds? **YES**: Go to **Solution B** **NO**: Test operation. If error does not return then the condition was corrected by power reset.
		Solution A - **E14 Failure Mode** *key read ribbon cable is disconnected or defective* 1. Check/reseat ribbon connection J4 connection on the ESEC 30 UIB. 2. Replace ESEC 30 UIB. 3. Replace TST panel. **E15 Failure Mode** *ESEC error or signal loss between ESEC 30 UIB and relay board.* 1. Check harness and connections between connector P6 of ESEC30 UIB to connector J2 of ESEC relay board. Repair or replace harness as needed. 2W. If connection and harness are good. then replace ESEC relay board. 3. If error remains replace ESEC30 UIB.
		Solution B - E11 Failure Mode *Shorted Keypad* 1. Reset power supply to range to see if failure code will clear. 2. Check/reseat ribbon harness and connectors between the TST panel and ESEC 30 UIB. 3. Replace the TST panel 4. Replace the ESEC 30 UIB
"hot surface" displayed and no power to Element	Surface element and its associated hot surface limiter mis-wired	1. Correct wiring of that element and its hot surface limiter.
"hot surface" displayed when surface is cold	1. Hot surface limiter contacts closed. 2. Defective Relay Board. 3. Defective ESEC 30 UIB	1. Disconnect power and check continuity of hot surface limiter contacts ***(See Note A)*** 2. If hot surface limiter contacts are open replace ESEC relay board. 3. Replace ESEC 30 UIB
Surface Element hot, but "hot surface" is not displayed	1. Loose connection between surface element and Relay Board J4 2. Miswired element harness. 3. Open limiter contacts. 4. Failed harness or connector from UIB to Relay Board 5. Defective Relay Board. 6 Defective ESEC 30 UIB	1. Check the wire harness connector and seat properly to Relay Board J4 connector. 2. Check surface harness for correct wiring from each element's hot surface limiter - correct wiring or replace harness if necessary. 3. Turn on all elements to Hi. Wait 3 minutes to ensure all surfaces are hot. Check continuity of limiter switch circuit for each element. ***(See Note A)*** 4. Check the wire harness and connectors from ESEC 30 UIB P5 to Relay Board Connector J5. Replace harness if defective. 5. Replace Relay Board 6. Replace ESEC 30 UIB
Element does not heat when turned on at TST panel.	1. Miswiring or faulty connection from element to Relay Board 2. Faulty connection from ESEC 30 UIB to ESEC Relay Board 3. Open Element 4. Defective Relay Board 5. Defective UIB	1. Check wiring harness and connections from element to Relay Board. 2. Check harness and connections from UIB connector P10 to Relay Board J3. 3. Check continuity of surface element heating circuit. 4. Replace ESEC Relay Board. 5. Replace ESEC 30 UIB

Wiring Diagram - Electric A Models with Mini Oven

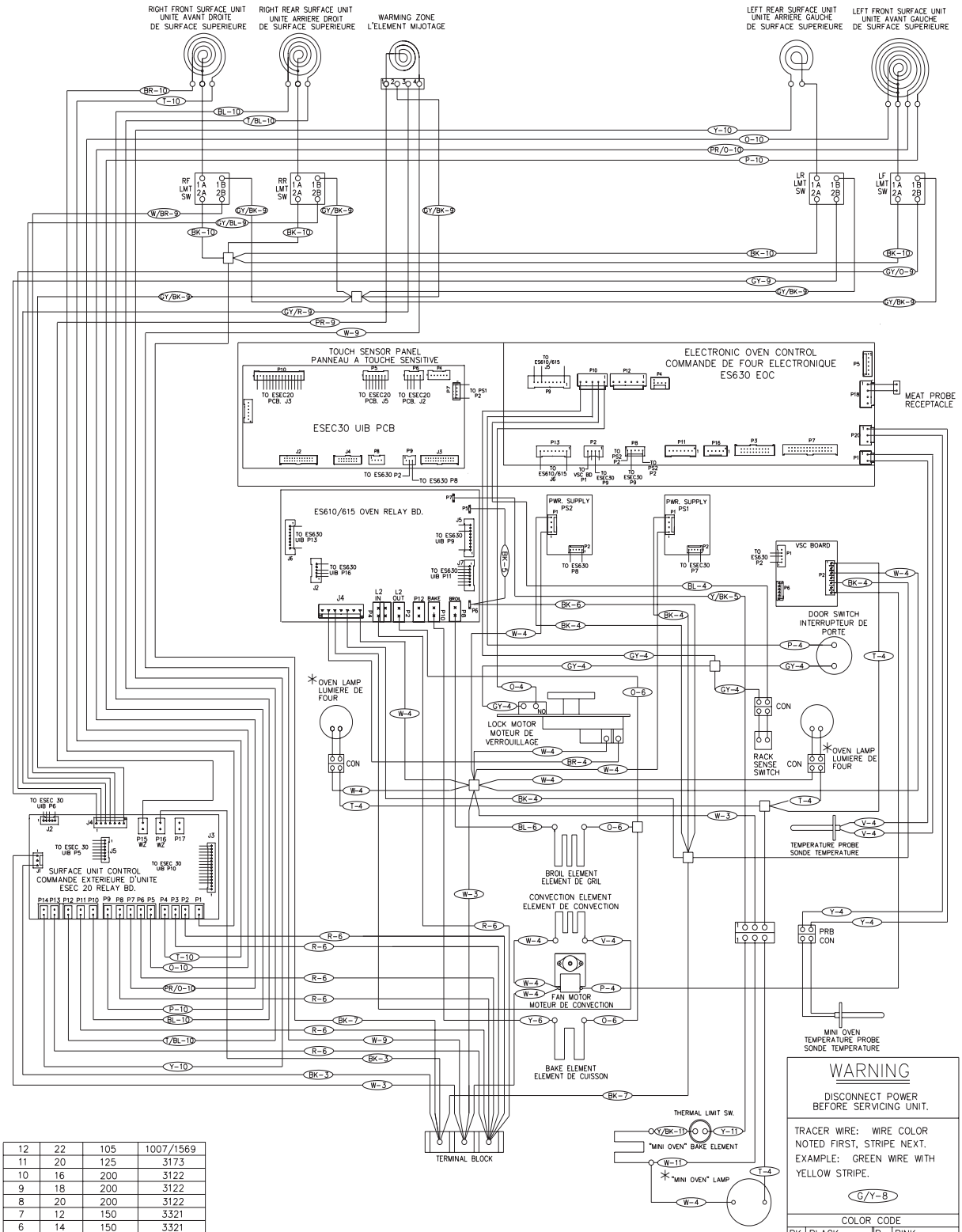

12	22	105	1007/1569
11	20	125	3173
10	16	200	3122
9	18	200	3122
8	20	200	3122
7	12	150	3321
6	14	150	3321
5	16	150	3321
4	20	150	3321
3	18	150	3321
2	16	105	1015
1	20	105	1015
WIRE	AWG	TEMP°C	UL STYLE

WARNING

DISCONNECT POWER BEFORE SERVICING UNIT.

TRACER WIRE: WIRE COLOR NOTED FIRST, STRIPE NEXT. EXAMPLE: GREEN WIRE WITH YELLOW STRIPE.

G/Y-8

COLOR CODE			
BK	BLACK	P	PINK
BL	BLUE	PR	PURPLE
BR	BROWN	R	RED
C	COPPER	T	TAN
G	GREEN	V	VIOLET
GY	GRAY	W	WHITE
O	ORANGE	Y	YELLOW

316519901 DLC 10/07

Schematic Diagram - Electric A Models with Mini Oven

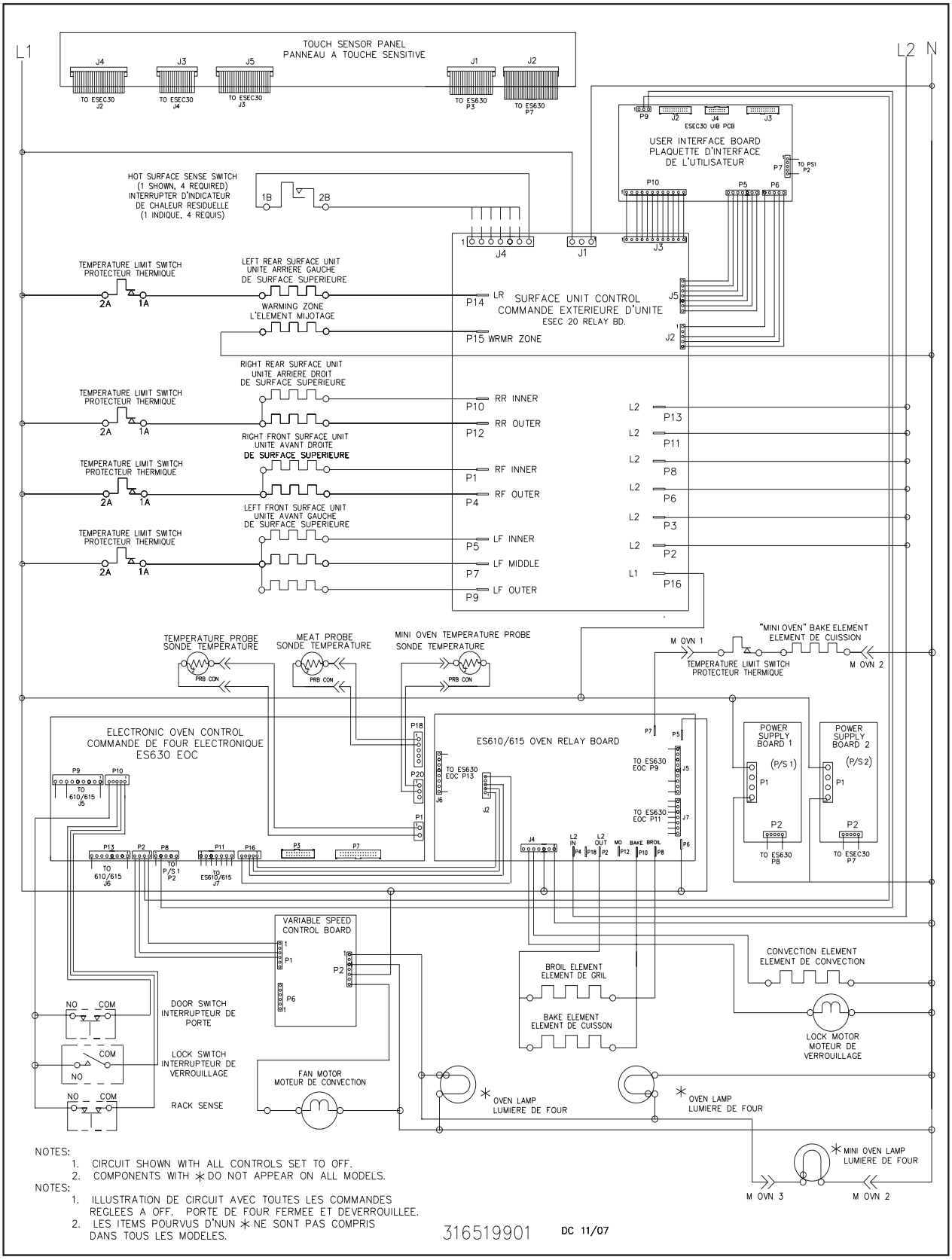

NOTES:
1. CIRCUIT SHOWN WITH ALL CONTROLS SET TO OFF.
2. COMPONENTS WITH ✳ DO NOT APPEAR ON ALL MODELS.

NOTES:
1. ILLUSTRATION DE CIRCUIT AVEC TOUTES LES COMMANDES REGLEES A OFF. PORTE DE FOUR FERMEE ET DEVERROUILLEE.
2. LES ITEMS POURVUS D'NUN ✳ NE SONT PAS COMPRIS DANS TOUS LES MODELES.

316519901 DC 11/07

Wiring Diagrams

Wiring Diagram - B Models with Warming Drawer

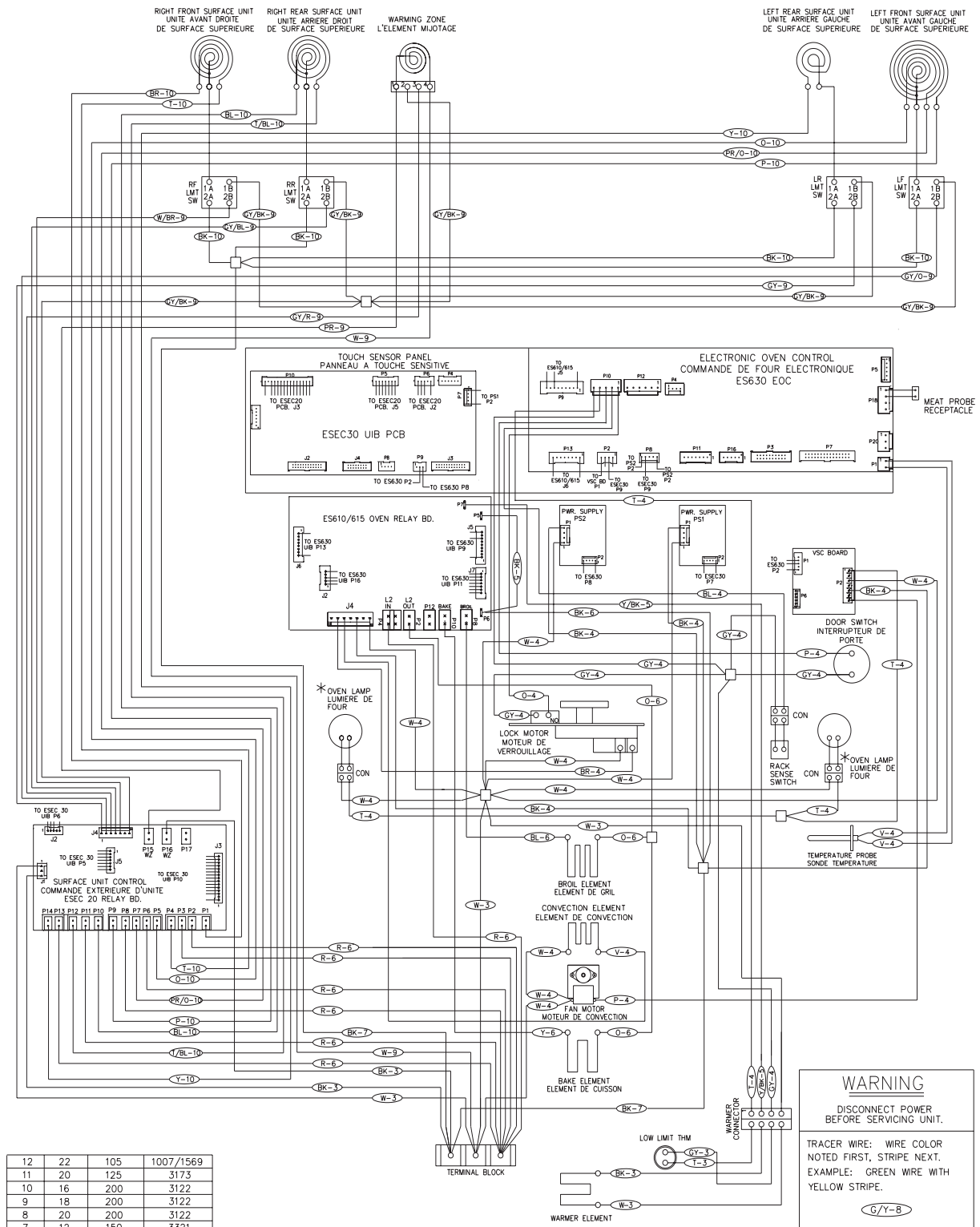

12	22	105	1007/1569
11	20	125	3173
10	16	200	3122
9	18	200	3122
8	20	200	3122
7	12	150	3321
6	14	150	3321
5	16	150	3321
4	20	150	3321
3	18	150	3321
2	16	105	1015
1	20	105	1015
WIRE	AWG	TEMP°C	UL STYLE

316519900 DLC 11/07

WARNING

DISCONNECT POWER BEFORE SERVICING UNIT.

TRACER WIRE: WIRE COLOR NOTED FIRST, STRIPE NEXT. EXAMPLE: GREEN WIRE WITH YELLOW STRIPE.

G/Y-8

COLOR CODE			
BK	BLACK	P	PINK
BL	BLUE	PR	PURPLE
BR	BROWN	R	RED
C	COPPER	T	TAN
G	GREEN	V	VIOLET
GY	GRAY	W	WHITE
O	ORANGE	Y	YELLOW

The TST system utilizes a touch sensitive glass panel (photo A) to allow the user to control the upper and lower ovens, warmer drawer and cooktop surface elements including the cooktop Warmer Zone element. The TST panel is connected to the electronic oven control (EOC) and the electronic surface element control (ESEC) system UIB (user interface board) via ribbon connectors. It is similar in function to a membrane switch.

The TST control panel generates an electromagnetic field around each touch pad. When this field is interrupted by touching the glass, the control panel communicates the selection information to the EOC or ESEC system . The EOC or ESEC system then responds by signaling the oven relay board or surface element control board to close the appropriate relays to perform the selected operation or function.

NOTE: The TST system touch glass is a non serviceable part and must be replaced as a complete assembly if found to be defective. The replacement glass panel will come attached to the frame and will include ribbon connectors. (Photo B)

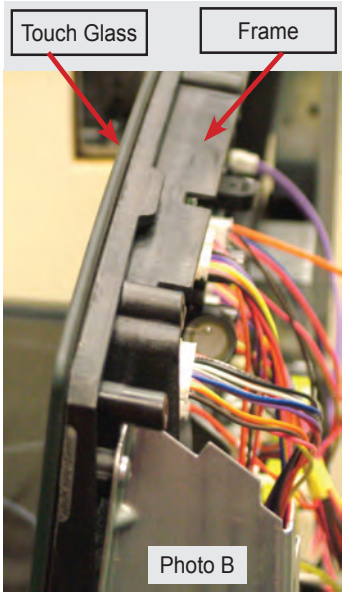

Troubleshooting The TST Panel

The TST control panel has ribbon connectors that link it to the EOC and ESEC 30 UIB. (Photo C). If these connectors fail or become loose the TST control panel will not operate and under some conditions will generate a fault code in the EOC or ESEC display window.

If the TST control malfunctions or fails to operate inspect and re-seat the ribbon connectors. If a failure/fault code is present follow the diagnostic procedure for that code.

If no fault code appears but the EOC system does not respond when the TST panel is programmed then the cause can be the EOC or the TST panel. Replace the EOC first. If the problem remains replace the TST panel assembly.

If the ESEC does not respond when the TST panel is programmed then the cause can be the ESEC UIB or the TST panel. Replace the UIB first. If the problem remains replace the TST panel assembly.

If only a single key is non responsive then the TST panel is the most likely cause of failure.

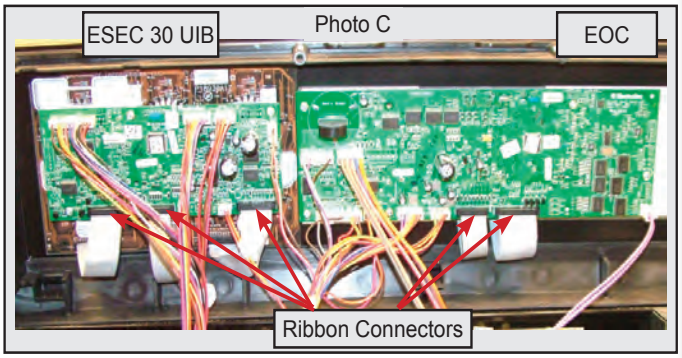

Diagnostic Service Mode

DIAGNOSTIC SERVICE MODE

When an error or failure occurs in the Electronic Oven Control (EOC) system, or the Electronic Surface Element Control (ESEC) system, the control panel will usually produce an audible beep accompanied by a special display to indicate that there is a failure condition. The manner in which ESEC failures are displayed will vary greatly between the Wave Touch models and the IQ touch models due to the different styles of control panels. In order for a service technician to be able to more easily determine which failure condition has occured a special Diagnostic Service Mode has been built in to the control panel software.

To enter the service mode the range must be in the “IDLE” state meaning that all elements and functions are turned off. Press and hold the TIMER keypad for the upper oven and the Upper Oven selector keypad for 3 seconds. Always press the TIMER keypad first immediately followed by the Upper Oven selector keypad. After three seconds the control panel will enter the service mode and will display the most recent error or failure codes for the upper and lower ovens as well as the ESEC sysetm.

The control will exit the Diagnostic Service Mode after one minute or it can be ended by pressing the CANCEL keypad. The service mode can be restarted if necessary by repeating the steps outlined above. While the control is in the Diagnostic Service Mode the error codes can be cleared from memory by pressing the Upper Oven Timer keypad. Once they are cleared they can not be recalled.

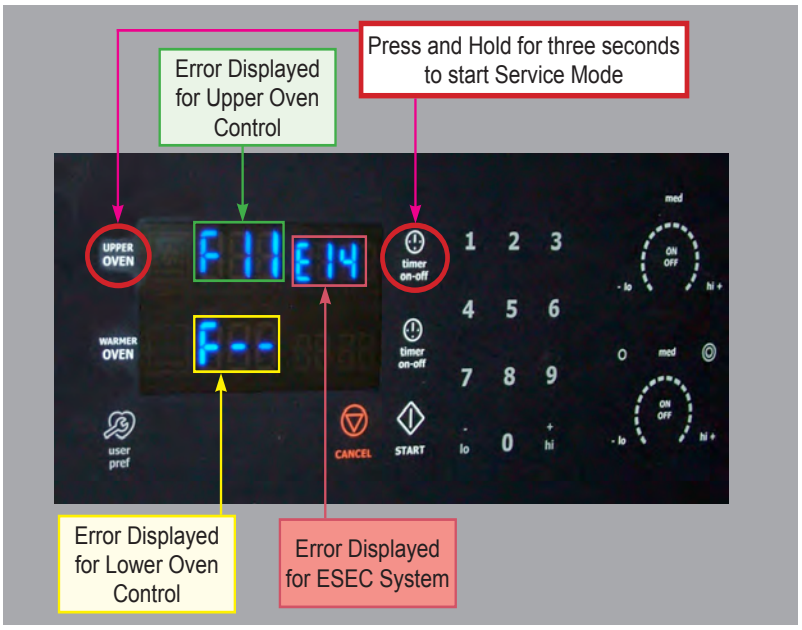

The photo above shows an IQ Touch control panel that has been programmed into the Diagnostic Service Mode. The upper oven control is displaying an F11 error code (Stuck Keypad), The lower oven control is displaying no error code, and the ESEC error code E 14 is displayed in the upper oven timer window. Once it has been determined which failure condition is present follow the troubleshooting steps outlined in the tech sheet and this service manual to correct that specific condition.

.

NOTE: The Diagnostic Service Mode works exactly the same for both IQ Ttouch and Wave Touch models.

The ESEC 30 Electronic Surface Element Control System operates the radiant surface elements and warming zone element. The ESEC 30 UIB receives the operator selection from the TST panel and signals the ESEC 20 Surface Unit Control Board (relay board) which then closes the appropriate relay to turn on the desired element.
If a failure occurs in the ESEC system there are several error codes that may be displayed to guide the service technician in diagnosing the failure.
It is important to note that the error codes are displayed differently between the "A" models with Wave-Touch™" display and the "B" model with " IQ Touch™" display. Although the display method is different the potential failure conditions and possible cause are the same.

ESEC 30 ERROR CODES A Models

When a failure occurs in the ESEC system the control will beep and usually display an error code. These error codes will appear in two front element displays. The left side will display the letter E and the right side will display the error code number. (Fig 1). In some cases the control may beep and display only the letter " E " in the left display or there may be no display in either window.

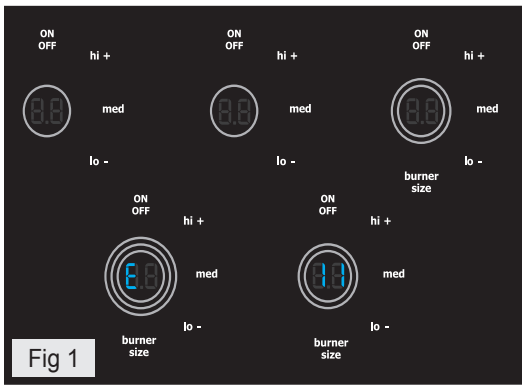

Fig 1

The troubleshooting guide below provides a listing of the likely failure condition or cause, as well as suggested corrective actions to be taken. Perform the steps one at a time in the order listed below to correct the specific failure condition. 2.

ESEC 30 TROUBLESHOOTING GUIDE - A Models

SYMPTOM	LIKELY FAILURE CONDITION/CAUSE	SUGGESTED CORRECTIVE ACTION
Control Beeping No Error Codes Displayed	ESEC key display ribbon cable is disconnected or defective	1. Check ribbon connection J3 connection on the ESEC 30 UIB to J5 on TST panel. 2. Test continuity of ribbon harness. Replace if defective. 3. Replace ESEC 30 UIB. 4. Replace TST panel.
" E " In Displays	ESEC key display ribbon cable is disconnected or defective	1. Check ribbon connection J2 connection on the ESEC30 UIB to J4 on TST panel. 2. Test continuity of ribbon harness. Replace if defective. 3. Replace ESEC 30 UIB. 4. Replace TST panel.
"E 11" In Displays	Shorted Keypad	1. Reset power supply to range to see if failure code will clear. 2 Test ribbon harness and connectors between the TST panel and ESEC 30 UIB. Replace if defective 3. Replace the TST panel 4. Replace the ESEC 30 UIB
" E 14 " In Displays	ESEC key read ribbon cable is disconnected or defective	1. Check ribbon connection J4 connection on the ESEC 30 UIB to J3 on TST panel. 2. Test continuity of ribbon harness. Replace if defective. 3. Replace ESEC 30 UIB. 4. Replace TST panel.
" E 15 " In Displays	Signal loss between ESEC 30 UIB and ESEC relay board.	1. Check harness and connections between connector P6 of ESEC30 UIB to connector J2 of ESEC relay board. Repair or replace harness as needed. 2. If connection and harness are good. then replace ESEC relay board. 3. If error remains ESEC30 UIB.

ESEC 30 Control System & Error Codes

ESEC 30 ERROR CODES - B Models

When a failure occurs in the ESEC system the control will beep and half of the power level indicator segments for the surface elements will flash in various combinations to indicate which error has occurred. (Fig. 1)
The troubleshooting guide provides a listing of the likely failure condition or cause, as well as suggested corrective actions to be taken.
Perform the steps one at a time in the order listed below to correct the specific failure condition.

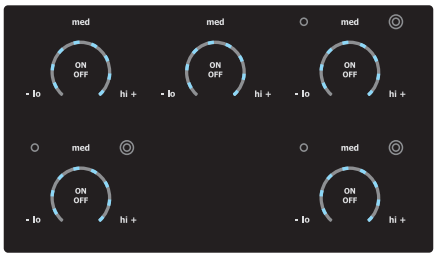

ESEC 30 TROUBLESHOOTING GUIDE - B Models

SYMPTOM	LIKELY FAILURE CONDITION/ CAUSE	SUGGESTED CORRECTIVE ACTION
Control Beeping & Center Burner Only LED's Flashing	ESEC key display ribbon cable is disconnected or defective	1. Check/reseat ribbon connection J3 connection on the ESEC 30 UIB. 2. Replace ESEC 30 UIB. 3. Replace TST panel.
Control Beeping & Left Side Burners Only LED's Flashing	ESEC key display ribbon cable is disconnected or defective	1. Check/reseat ribbon connection J2 connection on the ESEC30 UIB. 2. Replace ESEC 30 UIB. 3. Replace TST panel.
Control Beeping & All Burners LED's Flashing	**E11 Failure Mode -** Shorted Keypad ***or*** **E14 Failure Mode -** ESEC key read ribbon cable is unplugged or defective ***or*** **E15 Failure Mode -** Internal ESEC error ***or*** Signal loss between ESEC 30 UIB and ESEC relay board.	Turn off power to range for 30 seconds then reapply power. Does error return within 5 seconds ? **YES**: Go to **Solution A** **NO**: Does error return after 30 seconds? **YES**: Go to **Solution B** **NO**: Test operation. If error does not return then the condition was corrected by power reset.
		Solution A - **E14 Failure Mode** *key read ribbon cable is disconnected or defective* 1. Check/reseat ribbon connection J4 connection on the ESEC 30 UIB. 2. Replace ESEC 30 UIB. 3. Replace TST panel. **E15 Failure Mode** *ESEC error or signal loss between ESEC 30 UIB and relay board.* 1. Check harness and connections between connector P6 of ESEC30 UIB to connector J2 of ESEC relay board. Repair or replace harness as needed. 2W. If connection and harness are good. then replace ESEC relay board. 3. If error remains replace ESEC30 UIB.
		Solution B - E11 Failure Mode *Shorted Keypad* 1. Reset power supply to range to see if failure code will clear. 2. Check/reseat ribbon harness and connectors between the TST panel and ESEC 30 UIB. 3. Replace the TST panel 4. Replace the ESEC 30 UIB
"hot surface" displayed and no power to Element	Surface element and its associated hot surface limiter mis-wired	1. Correct wiring of that element and its hot surface limiter.
"hot surface" displayed when surface is cold	1. Hot surface limiter contacts closed. 2. Defective Relay Board. 3. Defective ESEC 30 UIB	1. Disconnect power and check continuity of hot surface limiter contacts ***(See Note A)*** 2. If hot surface limiter contacts are open replace ESEC relay board. 3. Replace ESEC 30 UIB
Surface Element hot, but "hot surface" is not displayed	1. Loose connection between surface element and Relay Board J4 2. Miswired element harness. 3. Open limiter contacts. 4. Failed harness or connector from UIB to Relay Board 5. Defective Relay Board. 6 Defective ESEC 30 UIB	1. Check the wire harness connector and seat properly to Relay Board J4 connector. 2. Check surface harness for correct wiring from each element's hot surface limiter - correct wiring or replace harness if necessary. 3. Turn on all elements to Hi. Wait 3 minutes to ensure all surfaces are hot. Check continuity of limiter switch circuit for each element. ***(See Note A)*** 4. Check the wire harness and connectors from ESEC 30 UIB P5 to Relay Board Connector J5. Replace harness if defective. 5. Replace Relay Board 6. Replace ESEC 30 UIB
Element does not heat when turned on at TST panel.	1. Miswiring or faulty connection from element to Relay Board 2. Faulty connection from ESEC 30 UIB to ESEC Relay Board 3. Open Element 4. Defective Relay Board 5. Defective UIB	1. Check wiring harness and connections from element to Relay Board. 2. Check harness and connections from UIB connector P10 to Relay Board J3. 3. Check continuity of surface element heating circuit. 4. Replace ESEC Relay Board. 5. Replace ESEC 30 UIB

Electronic Oven Control

The Electrolux branded ranges covered in this manual feature the ES630 Electronic Oven Control (EOC) . This control system is comprised of the Electronic Oven Control Board, Oven Relay Board, and Power Supply Board. The ES630 EOC interfaces with the TST (Touch Sensor Technology) panel to allow the consumer to select the desired function and options.
There are currently two different versions of the TST control panels sometimes referred to as “A” and “B” versions. Other terms used to refer to the different control styles are: “Wave-Touch™” for the A model and “ IQ Touch™” for the B model.

The most obvious difference is the appearance of the control panels when they are in an idle state. The Wave-Touch™ display panel has a “sleep mode” that turns off the illuminated control icons on the touch panel whenever the range is idle for 2 minutes (Diag A). During this sleep mode only the time of day will be illuminated in the control panel.

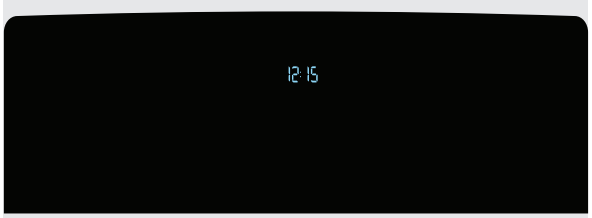

Diag.A

To wake the control simply touch the glass surface. The touch control keypads will illuminate to allow the user to program the desired function (Diag B).


Diag. B

The IQ Touch™ display panel has permanent graphics imprinted in the glass panel and will remain visible at all times (Diag C).


Diag. C

In current models the Wave-Touch control is always used on ranges that feature the “Perfect Pair™ lower oven”, also referred to as a Mini Oven.
Models that have the IQ Touch control feature a warmer drawer instead of a mini oven.

EOC Troubleshooting & Testing

The Electronic Oven Control system found in the Electrolux freestanding electric ranges uses a separate oven relay board to power the individual components such as the bake and broil elements, lock motor, warmer drawer or mini oven element, etc. This is different from some other styles of electronic oven controls where the EOC and control relays are integrated in to a single component. The servicer must follow the troubleshooting and diagnostic information found in this manual and in the product tech sheet to accurately diagnose any failures and avoid unnecessary parts replacement.

Photo A shows the locations of the EOC Board, Oven Relay Board, ESEC 30 UIB and Power supply boards as seen from the rear of the range with the rear panel removed. The ribbon connectors to the TST panel can be seen at the bottom of the EOC board.

Photo A

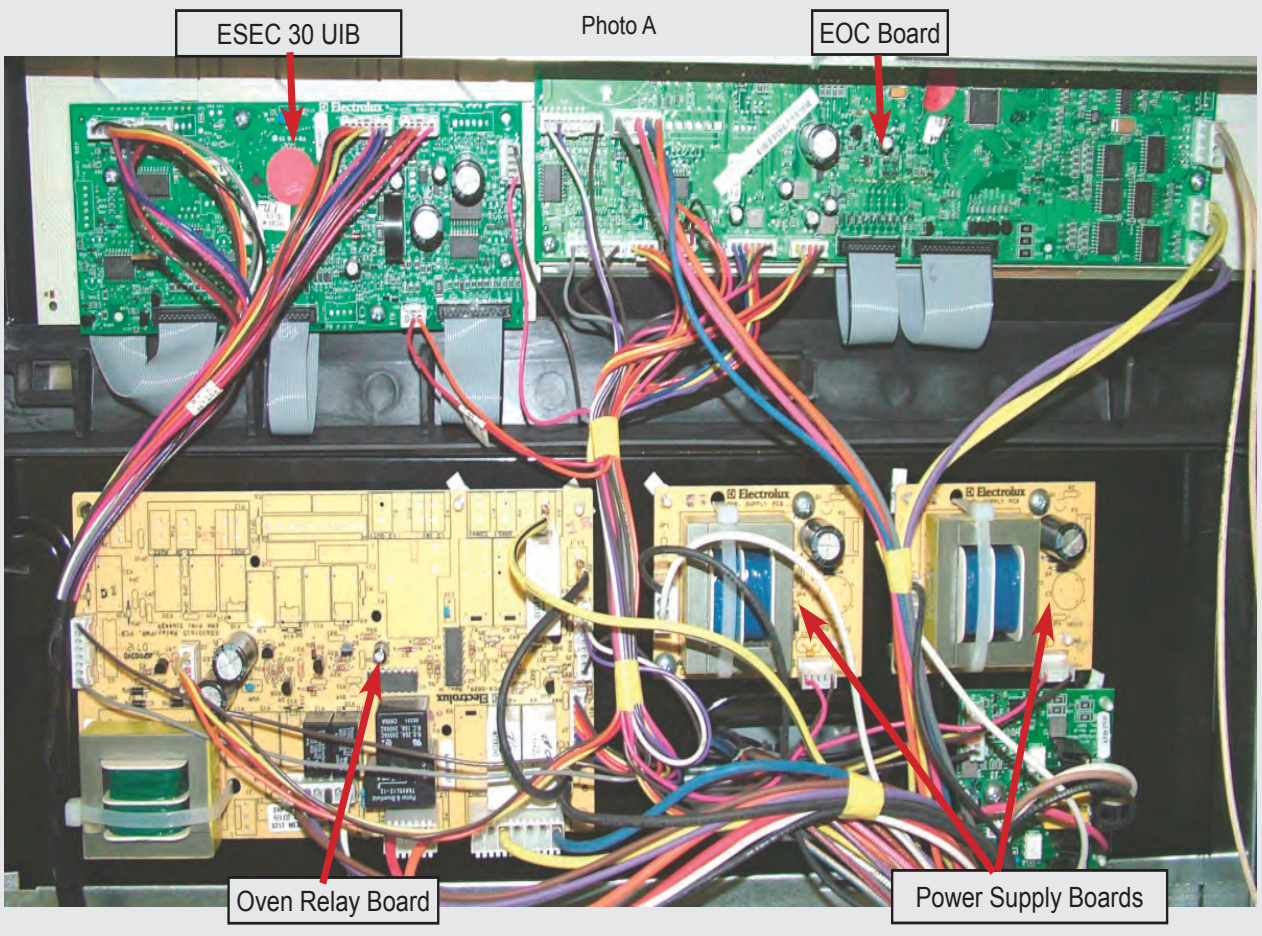

ES630 CONTROL

If a component part that is controlled by the EOC fails to operate the cause could be due to a defect in the EOC, Oven Relay Board, wiring connections , or the non functioning component. Component parts like elements, fan motors, lock motors, etc. can be tested with a simple continuity check using an ohm meter. Verify the continuity of the component and the wiring circuit between the component to the relay board first. Also verify continuity of the wiring harness and connectors between the EOC and Oven Relay Board.
If the component and wiring connections are good test the output signal voltage from the EOC to the Relay board for the particular relay that turns on that component part. When testing the output signal set your volt meter to read DC voltage. The output signal will be approximately 3.3 volts DCV.

Using the **EOC SIGNAL VOLTAGE TEST MATRIX** it is possible to determine if the EOC is properly signaling the relay board to turn on a particular component. If the proper signal is detected but the relay does not close then the relay board is defective and must be replaced. If the proper signal is not detected then the EOC is defective and must be replaced.

EOC Signal Voltage Test Matrix

Test for 3.3 VDC (+/- .5 volts) between **GND** on EOC circuit board and the indicated connector pin when the specified function is activated.

FREESTANDING ELECTRIC "A" & "B" MODELS, and DUAL FUEL MODELS		
FUNCTION	**EOC** Test Points Connector/Pin#	**Relay Board** Test Points Connector/Pin #
Mini Oven or Warmer Drawer	P9/Pin 7 → to GND	J5/Pin 7 → to GND
L2 Out Relay	P11/Pin 4 → to GND	J7/Pin 4 → to GND
Broil Relay	P11/Pin 1 → to GND	J7/Pin 1 → to GND
Bake Relay	P11/Pin 2 → to GND	J7/Pin 2 → to GND
Convection Element Relay	P11/Pin 5 → to GND	J7/Pin 5 → to GND
Lock Motor Relay	P11/Pin 6 → to GND	J7/Pin 6 → to GND

RELAY BOARD CONNECTORS

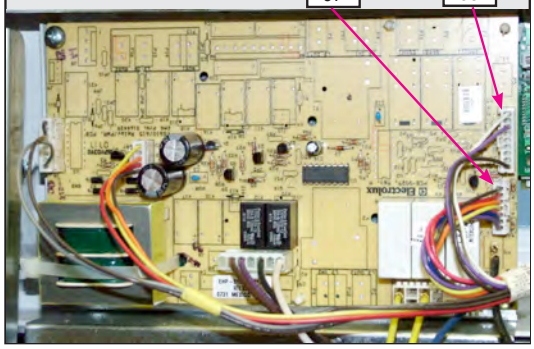

When testing the signal voltage from the EOC the negative (-) lead of the test meter must connect the GND circuit on the EOC circuit board. The easiest access point to the GND circuit is located just above the left corner of the P11 connector. (Photo A). Either of the GND access points can be used.

Photo B demonstrates testing the Bake Relay signal voltage by measuring the voltage output between connector J7 pin #2 (red wire) and the GND circuit on the EOC circuit board on a gas range.

GND (-) CIRCUIT ACCESS POINTS

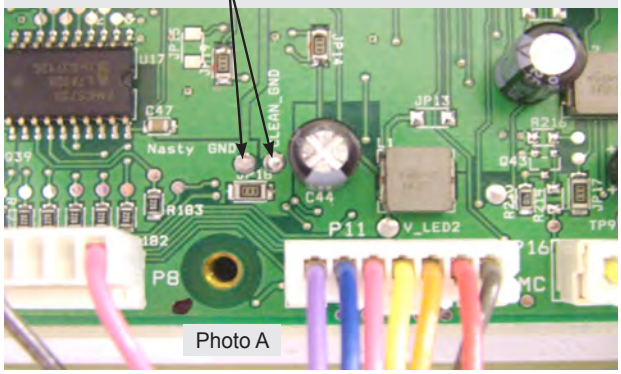

Photo A

BAKE RELAY SIGNAL VOLTAGE TEST

Photo B

Power Supply Boards

The EOC and ESEC system are powered by separate power supply boards that are mounted on the rear of the range chassis just below the EOC as seen in photo A.
The two Power Supply Boards are identical however one board is designated as PS 1 and the other is PS 2 on the wiring diagram. PS 1 provides the power supply to the EOC while PS 2 powers the ESEC system. Wire harness connections and colors are identical on both boards and it does not matter which board is connected to the EOC or ESEC system however the length of the wiring harness will only allow both harnesses to be connected in one orientation.

Incoming voltage to the boards should be approximately 120 VAC at P1. Output voltage should be approximately 8 VDC at P2.

Always test the incoming and outgoing voltage at the power supply boards when troubleshooting EOC or ESEC control failures.

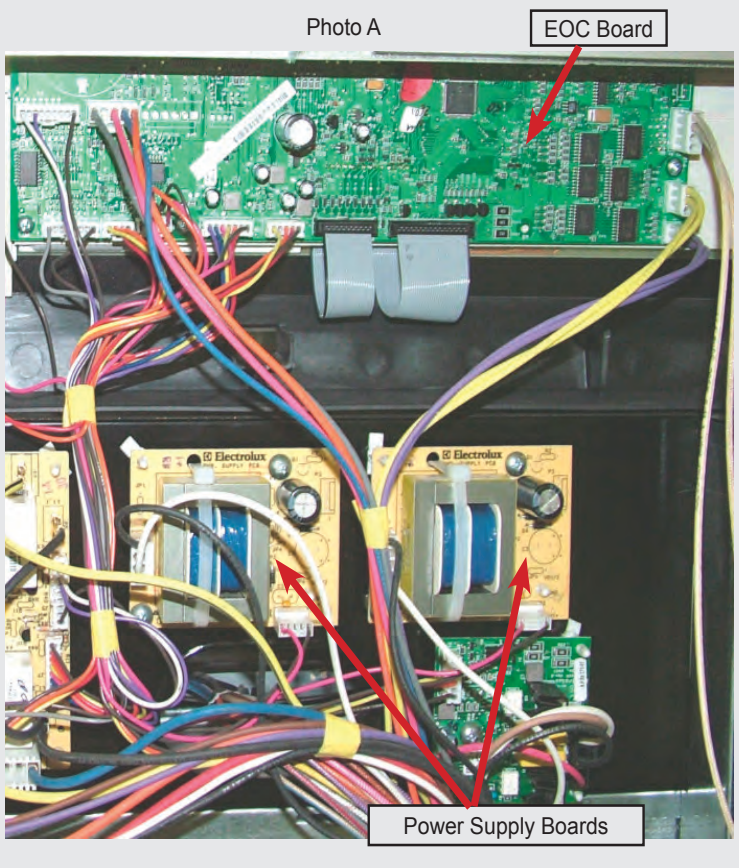

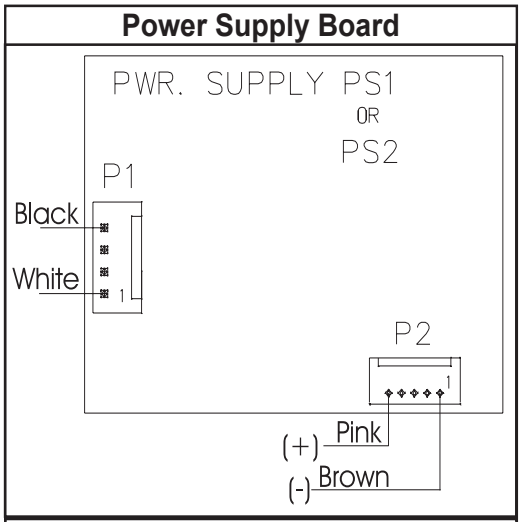

Power Supply Board (PS1 or PS2) Test Points
Connector P1 pins 1 & 4 - 120 vac
Connector P2 pins 1 & 5 - 8 vdc

NOTE: All voltages are approximate.

If there is a failure in the PS 1 (ESEC) power supply board or wiring the ESEC system display will not illuminate and the surface elements can not operate. Additionally there will likely be an F20 failure code displayed on the EOC display after several seconds.

If there is a failure in the PS 2 (EOC) power supply board or wiring the EOC display will not illuminate and the oven components and other devices can not operate. The ESEC system may still allow the surface elements to operate even though the EOC does not .

The Variable Speed Control (VSC) board operates the Convection Fan as well as the Oven LUXURY™ lighting. In the event that either of these features do not operate properly the VSC board should be examined as a possible source of failure. When testing for convection fan operation it should be noted that on gas ranges there is a six minute delay from the start of the convection cooking cycle until the fan motor will run.

Variable Fan Speed

To achieve optimum cooking results during convection cooking the fan motor speed can be varied. The EOC will signal the VSC board to speed up or slow down the fan as needed. This speed change takes place automatically with no action required by the consumer.

The VSC Board is located on the rear of the range just below the power supply boards, as seen in photo A. The board varies the voltage to the convection fan motor as directed by the EOC to alter the motor speed. The speed control signal and the power supply to operate the VSC board come from the EOC through a wiring harness connected between P2 on the EOC and P1 on the VSC board. This harness must be intact and properly connected for the VSC board to operate. If the harness is defective or not properly connected the EOC will display a fault code F23.

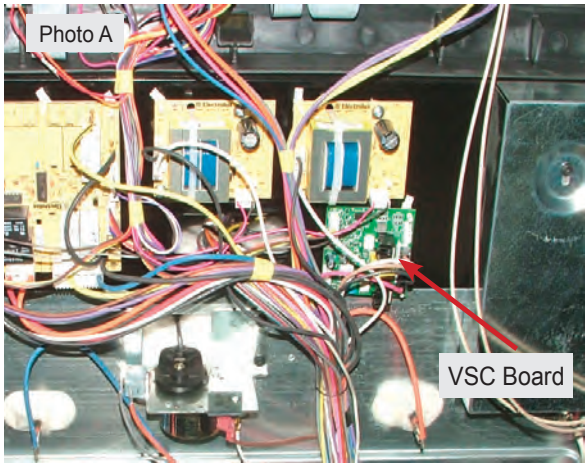

When testing the VSC board the power supply from the EOC to the board can be verified by measuring the voltage between pins 1 & 6 (the two outside pins) on connector P6 of the VSC board. This connector is not wired in field applications and the pins are easily accessed to test voltage while the other harness connectors are in place and power is applied to the range. Test for approximately 5 volts DC (+/- .5 volt) on these two pins. If the EOC appears to operate normally but the voltage to the VSC board is incorrect or if there is no voltage present inspect and test the wire harness and connectors between the EOC and VSC board. If the harness is good then the EOC is defective and should be replaced.

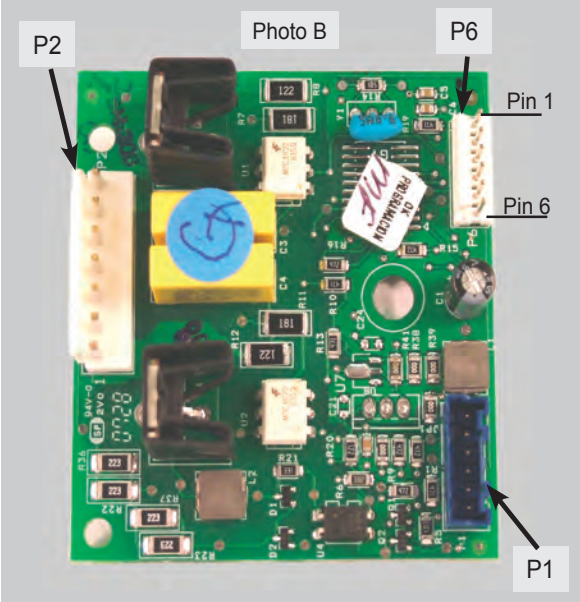

If the convection fan motor fails to run test for voltage to the convection fan motor. If no voltage is present then the failure is either in the VSC board, EOC , or the wiring in between. If there is proper voltage to the fan motor but it does not run then either the motor windings are open or the motor is stuck. Test the continuity of the motor windings with an ohm meter. There should be approximately 15 ohms of resistance in the convection fan motor windings. If the windings test good inspect the fan blade and motor shaft to see if the motor will turn. Adjust the fan blade to eliminate binding or replace the motor assembly if the motor shaft is seized.

Luxury™ Lighting

When the oven door is opened or the LIGHT keypad on the touch control panel is pressed the interior oven halogen lights come on and brighten gradually. When turned off they dim gradually until they are completely off. This feature is also sometimes referred to as “Ramp Up lighting”.
The incremental changing of the oven lights is controlled by the VSC board. A triac on the board gradually increases the voltage to the lights over a 2 - 3 second time span until the lights are on at full power.
If none of the halogen oven lights operate plug in the range and open the oven door. Test for approximately 120 volts AC at pins 1 & 3 of the P2 wire harness connector (brown & white wires) on the VSC board. Always use special care when making live voltage tests.

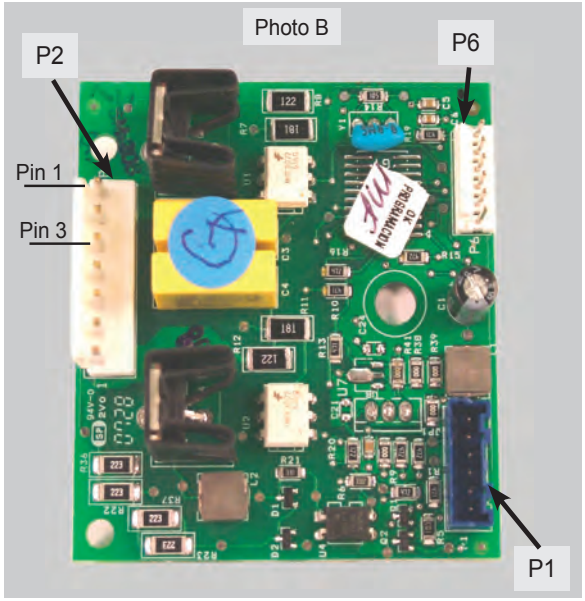

If the voltage is correct then the failure is caused by defective bulbs, sockets or wiring connections. If the voltage is incorrect the problem could be caused by a defective door switch, VSC board, or EOC.
Test the contacts of the oven door switch by disconnecting the P10 connector on the EOC and checking for continuity between the grey and pink wires in the wire harness.

Each light assembly houses a replaceable 40 watt bulb behind the clear lens.
To remove the lens use a thin bladed screwdriver or putty knife to gently pry the lens out. Take care not to damage the finish of the oven wall.

With the lens removed the bulb can be accessed. Remove the bulb by pulling it out of the porcelain base in the direction shown in the photo.
Use only the correct replacement bulb.
In the event that the socket or harness is defective the complete assembly with attached harness, bulb and lens must be replaced.

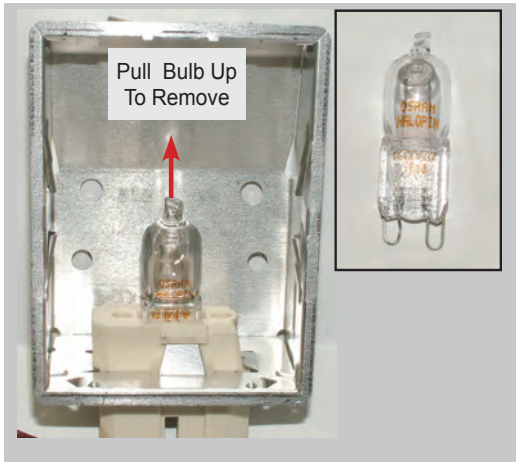

The light assembly is installed from the inside of the oven cavity.

When removing the old assembly it is recommended to tie a string to the end of the harness plug as the assembly is being removed. This string can then be used to fish the wire harness of the replacement assembly through the oven cavity liner and inner shield.

Always orient the assembly with the wire harness towards the center of the oven.

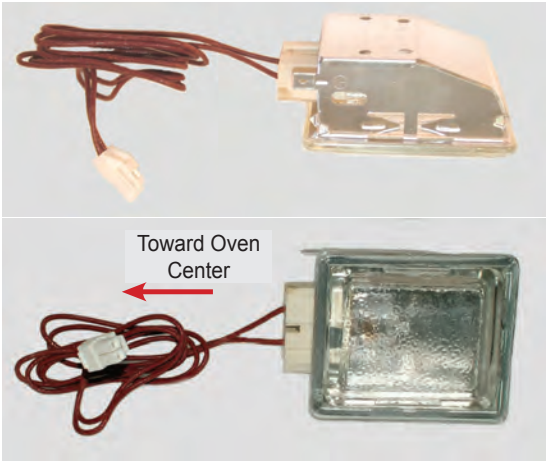

In order to prevent damage to the extendable telescoping interior oven racks, the EOC will not perform a self clean cycle until the racks are removed. A rack sensing switch mounted in the rear of the oven liner signals to the EOC that the racks have been removed. (Photo A)

When the oven racks are installed the rear edge of the rack pushes against a pivoting rod on the rack sensor assembly causing a cam on the rod to depress the sensor switch. When the switch is depressed the switch contacts are open. As long as the switch contacts are open the EOC will assume that the racks are installed in the oven.
When the racks have been removed the cam of the sensor rod releases the pressure on the rack sensing switch allowing the switch contacts to close.
When the EOC detects that the rack sensing switch contacts are closed it will allow the self cleaning cycle to operate.

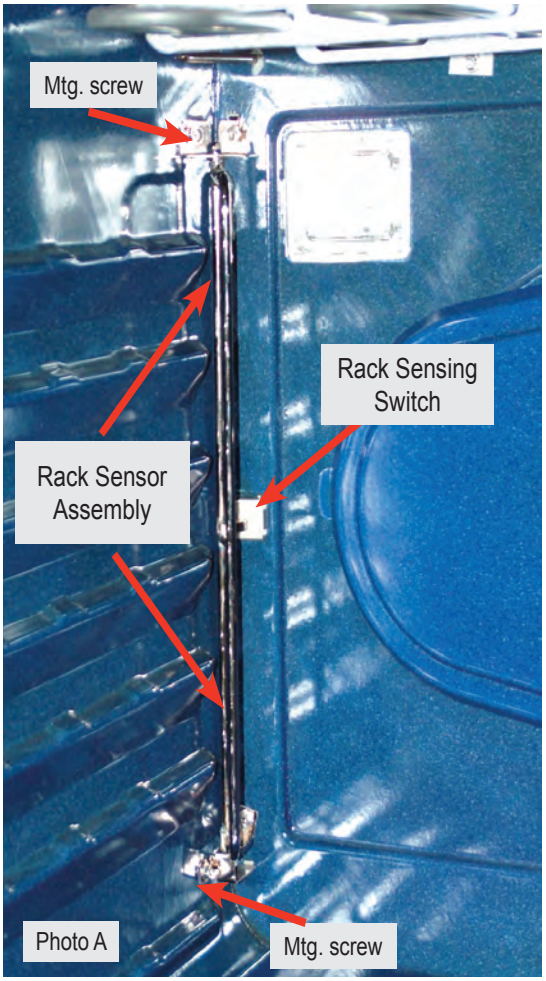

Photo A

If the customer starts a self cleaning cycle without removing the racks a message on the EOC will illuminate instructing them to remove the racks. (Photo B).
If the racks have been properly removed but the EOC displays the **REMOVE RACKS** message then the failure could be caused by defective switch contacts, wiring harness connections, stuck sensor rod assembly or defective EOC.
Examine the sensor assembly rod to be sure it can move freely. Also inspect the metal plunger cover on the switch to make sure it has not stuck. The sensor rod assembly can be removed for cleaning and lubricating if necessary.

Photo B

Rack Sensing Switch

To test the rack sense switch contacts remove the rear wire cover on the range and access the wire harness connector P10 on the EOC. (Photo A)
Unplug the harness and test for continuity between the blue & grey wires in the harness. When the racks are removed there should be less than 1 ohm of resistance if the switch contacts are closed.
If the switch contacts are closed but the EOC displays the “REMOVE RACKS” message then the EOC is defective.
If the switch contacts are open then test the switch through the harness plug on the switch itself. Unplug the harness connector (Photo B) and test for continuity between he brown wires of the harness.
If the switch contacts are open replace the switch. If the switch contacts are closed then the harness from the switch to the EOC is defective.

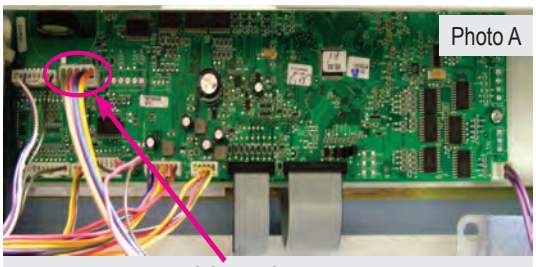

EOC P10 Connector

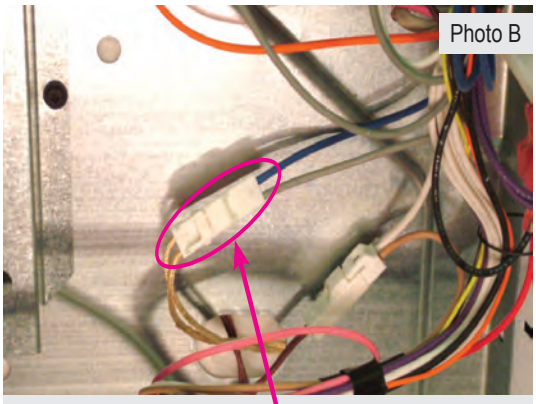

Rack Switch Harness Connector

Rack Switch Replacement

The rack sensing switch is installed into a cutout in the oven liner rear wall. (Photo C)
To replace the switch first turn off the power to the range and remove the lower back cover panel.
Unplug the harness connector (Photo B) and tie a 36 inch length of strong string or cord to the end of the connector that is attached to the switch. Secure the other end of the string so that it can not pull all the way through.
From inside the oven remove the rack sensor assembly by taking out the two screws at the top and bottom of the assembly. (Page 25 - Photo A).
Depress the tabs on the switch (Photo D) to release it from the cutout and carefully pull the switch with the attached wire harness inside the oven cavity.
Attach the string to the new switch harness and carefully pull the harness back through the oven liner and insulation .

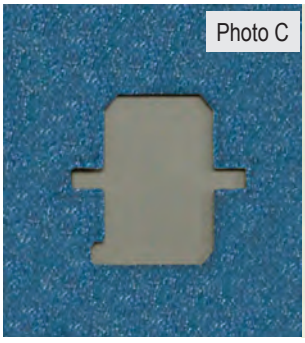

1. To access the hidden bake element remove the convection fan cover and rack sensor assembly.
Next remove the two screws found in the rear corners of the oven bottom panel. (Photo A)

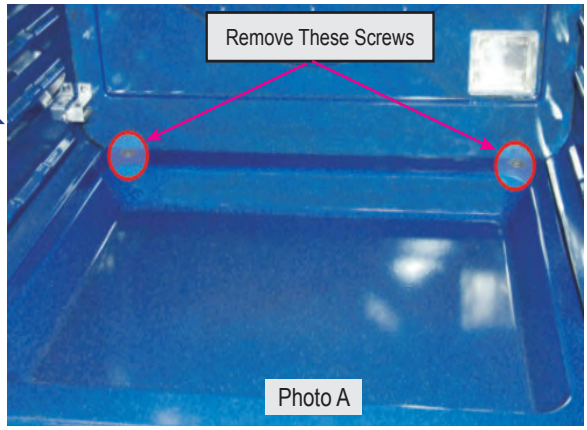

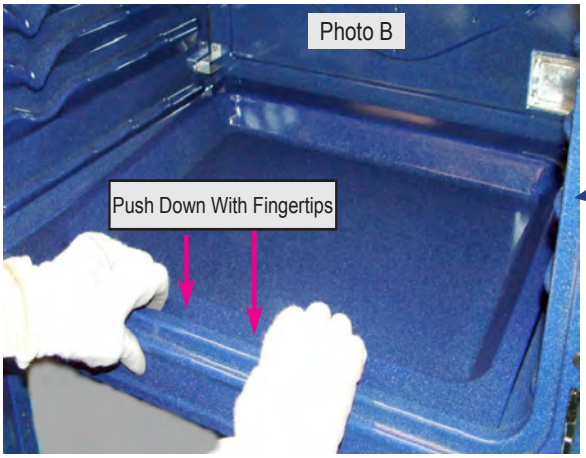

2. Press down on the front edge of the oven bottom with your finger tips. (Photo B)

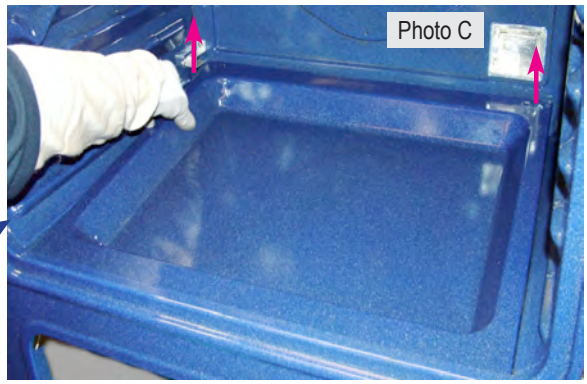

3. Pressing on the front edge of the oven bottom panel will cause the rear of the panel to raise upward allowing you to lift the panel out from the rear. (Photo C)

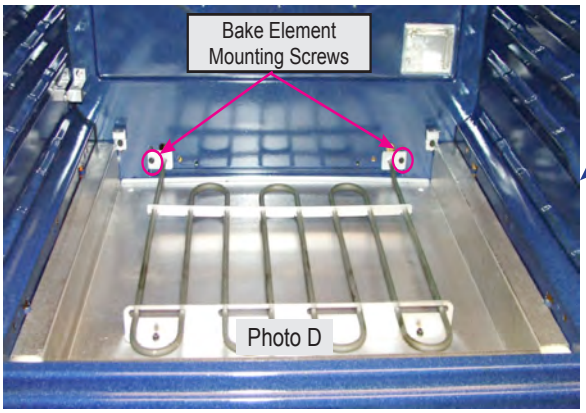

4. With the panel removed the bake element can be accessed. The bake element is secured by two screws. (Photo D).

To disconnect the wire harness it may be necessary to access the terminals from the rear by removing the lower rear wire cover.

Meat Probe Feature

Theory Of Operation

Some models feature a meat probe that is used to monitor the internal temperature of the food during cooking. The meat probe is a RTD (Resistance Temperature Device) similar to the oven temperature sensor found in ranges with electronic oven controls. As the temperature of the meat probe increases the resistance decreases. The E O C monitors this resistance whenever the probe is inserted into the receptacle and uses this information to determine when the food has reached the target temperature.

Component Parts

The components of the meat probe feature are: Probe assembly (Fig 1) and the receptacle assembly which includes the wire harness (Fig 2).


Fig 1


Fig 2

Troubleshooting

Possible failures of the meat probe feature are:

- Loose wire or harness connection.
- Defective receptacle and wiring harness.
- Defective meat probe.
- Defective Electronic Oven Control.

To troubleshoot the meat probe feature first test the probe itself by using an ohm meter to measure resistance. Place one of the meter leads on the very tip of the probe plug and the other lead on the adjacent short segment as indicated in the photo.

The resistance will vary depending on the actual temperature of the probe. At a room temperature of 77 degrees the resistance will measure approximately 46,000 ohms.

To test the accuracy of the probe place the metal wand end into a container of water that has a temperature of 120 degrees Fahrenheit and measure the resistance. At 120 degrees the resistance should be between 17,860 ohms and 19,740 ohms. If the resistance is incorrect replace the probe. If the probe resistance is correct plug the probe into the receptacle inside the oven and disconnect the probe harness connector from the E O C connection P 18.

Measure the resistance between the two wires in the harness plug. If the resistance is approximately equal to the resistance of the probe then the harness and receptacle circuit are good.

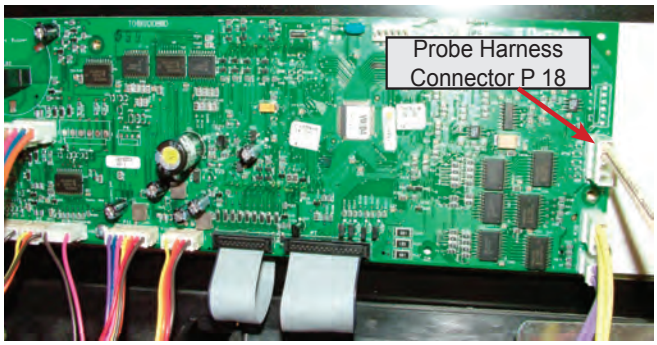

If the resistance is significantly higher or lower than that of the probe then the receptacle and wiring harness should be replaced. The receptacle and wiring harness are replaced as an assembly.
If the probe, receptacle and harness are good but the probe feature does not work the failure is in the E O C and it must be replaced.

Connector Location Base A

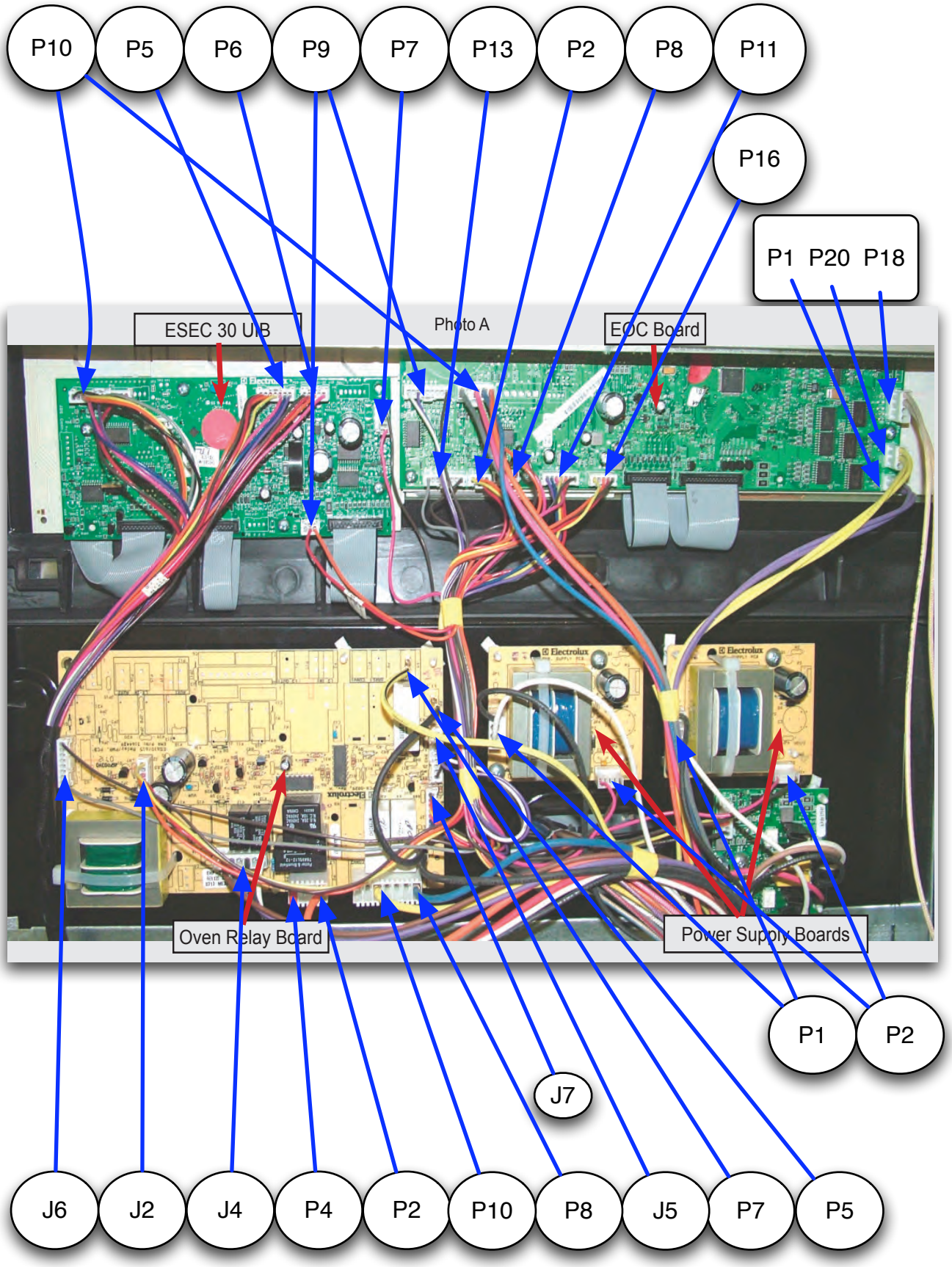

Connector Location Base B

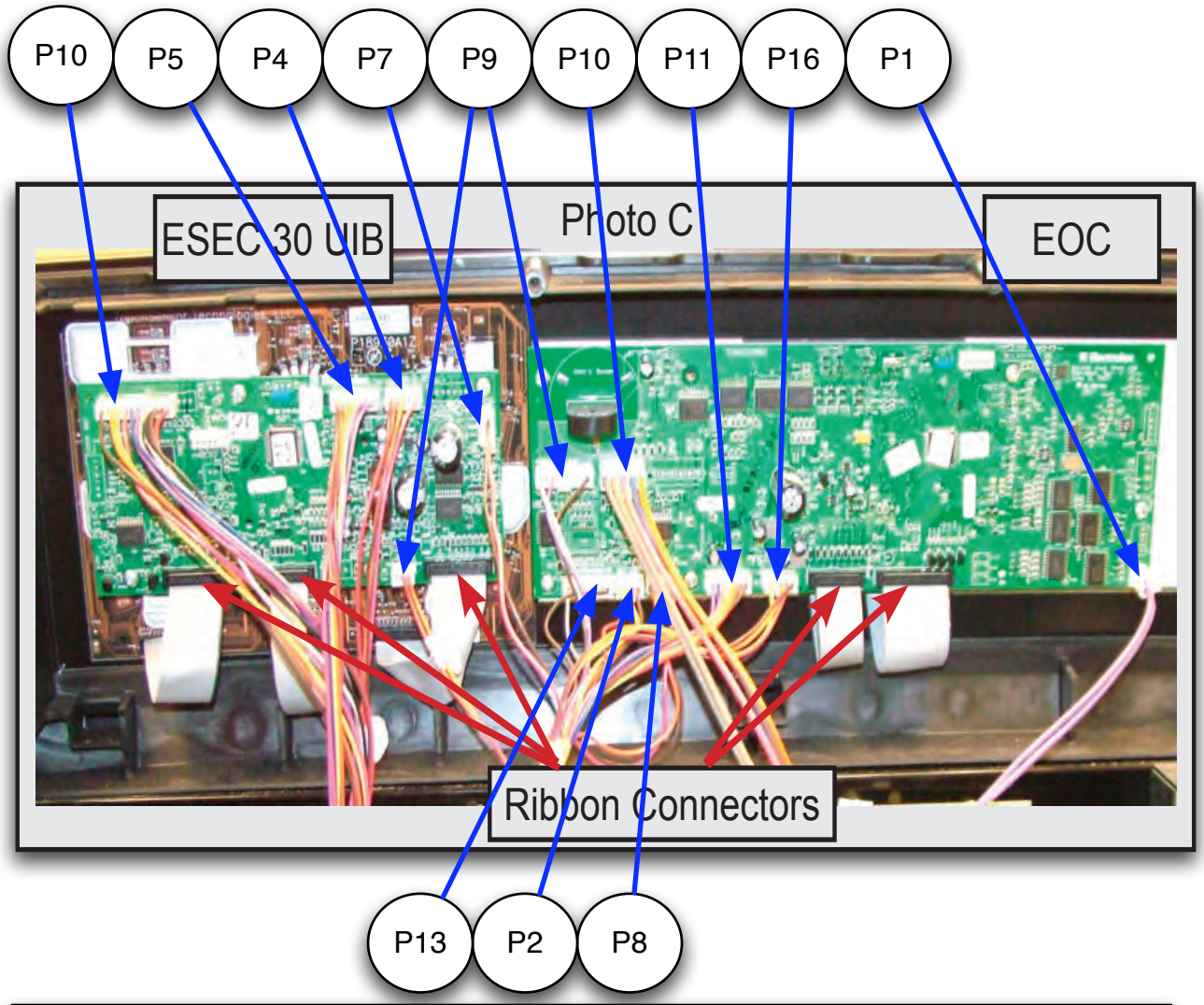

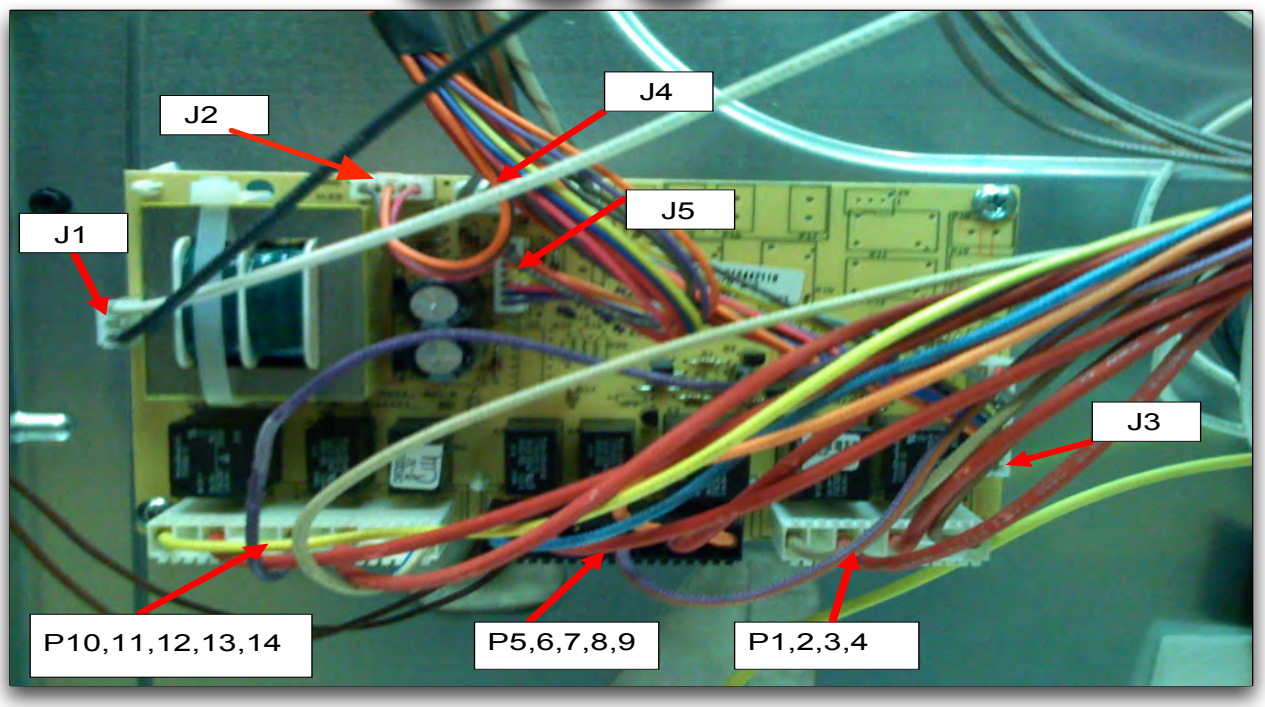

Electrolux

FREESTANDING GAS RANGE PRODUCT TRAINING SECTION

MODELS - EW30GF65G , EI30GF55G , EW3LGF65GW

Wave-Touch™

IQ Touch™

Range Technical Data

Maximum Allowable Surface Temperatures

All gas and electric ranges must comply with U.L and A.N.S.I. surface temperature limits outlined in the following chart. Note that the testing temperature is different for electric ranges produced *after* 08/26/2003.

SURFACE TEMPERATURE LIMITS
1. Product must be undamaged, correctly assembled and have the correct oven temperature.
2. All skin temperatures are based on a room temperature of 77° F (25° C) and an oven set temperature as specified below: For ELECTRIC ranges built prior to 08/26/2003 - 400° F For ELECTRIC ranges built after 08/26/2003 - 475° F For GAS ranges builtprior to 01/01/2004 - 400° F For GAS ranges built after 01/01/2004 - 475° F
3. Oven must be cycling at designated test temperature for one hour before test is conducted.
4. Pyrometers, (temperature testers), must be of high quality and properly adjusted.
5. An increase or decrease of 1° F in the room ambient temperature, will allow a 1° F increase or decrease in the maximum allowable surface temperature of the range.

	MATERIAL TYPE / FINISH				
	PAINTED	PORCELAIN	GLASS	PLASTIC†	METAL
LOCATION					
Side Panel	152° F	160° F	—	—	—
Oven Door	152° F	160° F	172° F	182° F	—
Warmer Drawer Front Panel	152° F	160° F	—	—	—
Knobs & Handles	—	—	—	*167° F **182° F	131° F **152° F
Skirt	—	—	—	*182° F	*152° F
Cooktop Lower Console Oven Vent Area	NO TEMPERATURE LIMITS APPLY TO THIS AREA				

† Includes plastic with metal plating not more than 0.005" thick and metal with a plastic covering not less than 0.005" thick.

* Self-Clean Gas Range at Clean Temperature
** Self-Clean Electric Range at Clean Temperature

RTD Temperature / Resistance Chart

The chart seen here can be used to test the resistance of the oven temperature sensor probe. For accuracy in testing use a high quality thermometer or temperature meter to determine actual oven temperature before reading the resistance of the probe.

RTD SCALE	
TEMPERATURE °F	RESISTANCE Ω
32 ± 1.9	1000 ± 4.0
75 ± 2.5	1091 ± 5.3
250 ± 4.4	1453 ± 8.9
350 ± 5.4	1654 ± 10.8
450 ± 6.9	1852 ± 13.5
550 ± 8.2	2047 ± 15.8
650 ± 13.6	2237 ± 18.5
900 ± 13.6	2697 ± 24.4

GAS RANGE COMPONENT RESISTANCE CHART			
NOTE: RESISTANCE MEASURMENTS ARE APPROXIMATE. VARIATIONS DUE TO TEMPERATURE CHANGES AND OTHER FACTORS ARE NORMAL.			
COMPONENT	VOLTAGE RATING	WATTAGE	RESISTANCE Ω (OHMS)
WARMER DRAWER ELEMENT	108 / 132	700	20.5 Ω
WARMER DRAWER ELEMENT	108 / 132	450	32 Ω
MINI OVEN ELEMENT	108 / 132	1000	14 Ω
CONVECTION ELEMENT	108 / 132	350	40 Ω
CONVECTION ELEMENT	108 / 132	200	72 Ω
CONVECTION FAN MOTOR WINDINGS	108 / 132		35 Ω
LOCK MOTOR WINDINGS	108 / 132		2000 Ω
GAS SAFETY VALVE	**		1.5 Ω
BAKE IGNITOR	108 / 132		100 Ω
BROIL IGNITOR	108 / 132		80 Ω
OVEN TEMPERATURE SENSOR PROBE (AT ROOM TEMPERATURE)	-		1100 Ω * *(REFER TO RTD CHART)

** Never apply line voltage to the oven safety valve terminals.

ES 610/615 Gas Oven Relay Board Circuit Analysis Matrix						
Relay Contacts		P6 (BK) to P10 (Y)	P6 (BK) to P8 (BL)	P6 (BK) to P12 (Y/BK)	**J4**/3 (BK) to **J4**/5 (V)	**J4**/3 (BK) to **J4**/6 (BR)
Component		Bake Ignitor	Broil Ignitor	Lower Oven Element	Convection Element	Door Lock Motor
OPERATION	Bake / Time Bake	X			P	
	Convection Bake/Roast	X			X	
	Broil		X			
	Dehydrate	X			X	
	Bread Proof				X	
	Slow Cook	X				
	Keep Warm (Upper Oven)	X				
	Keep Warm (Lower Oven)			X		
	Bake (Lower Oven) *			X		
	Door Lock Motor Locking/Unlocking					X
	Clean	X				

X = Contact Closed P = Contact closed during Pre-Heat only
*Some Models

EOC Signal Voltage Test Matrix		
Test for 3.3 VDC (+/- .5 volts) between GND on EOC circuit board and the indicated connector pin when the specified function is activated.		
FREESTANDING GAS "A" & "B" MODELS		
FUNCTION / RELAY	EOC CONNECTOR / PIN#	RELAY BOARD CONNECTOR / PIN #
Mini Oven or Warmer Drawer / K8	P11 / Pin 3	J7 / Pin 3
Broil / K4	P11 / Pin 1	J7 / Pin 1
Bake / K6	P11 / Pin 2	J7 / Pin 2
Convection Element / K10	P11 / Pin 5	J7 / Pin 5
Lock Motor / K12	P11 / Pin 6	J7 / Pin 6

Variable Speed Control Board

VSC Test Points. Connector P6 pins 1 & 6 - 5 vdc Connector P2 Pins 3 & 5 - 120 vac		RELAY CONTACTS	
		P2/5 (BK) to **P2**/1 (Tan)	**P2**/5 (BK) to **P2**/7 (Pink)
OPERATION	Oven Lamps	X	
	Convection Fan Mtr.		X
X = Contact Closed			

NOTE: All voltages are approximate.

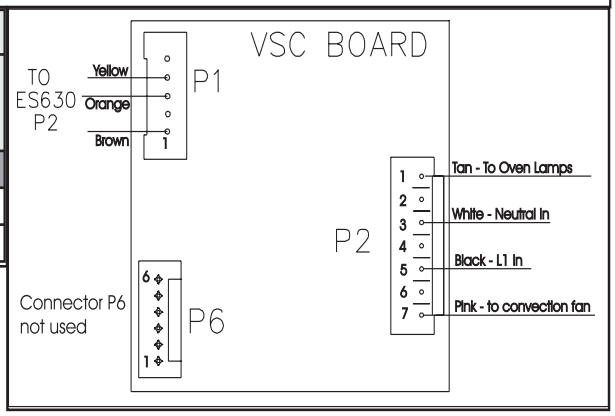

Power Supply Board

Power Supply Board (PS1 or PS2) Test Points
Connector P1 pins 1 & 4 - 120 vac
Connector P2 pins 1 & 5 - 8 vdc

NOTE: All voltages are approximate.

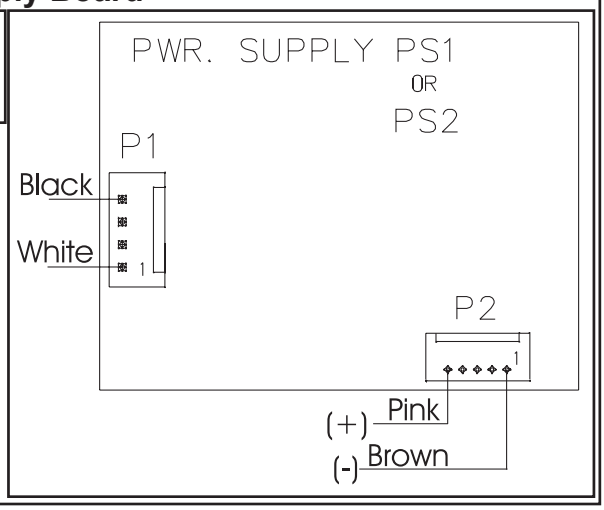

Terms and Abbreviations Used In This Manual

TECHNICAL TERMS

BTU = BRITISH THERMAL UNIT
EOC = ELECTRONIC OVEN CONTROL
GND = GROUND
LED = LIGHT EMITTING DIODE
RTD = RESISTANCE TEMPERATURE DEVICE (Temperature Sensor Probe)
VSC = VARIABLE SPEED CONTROL
IWC = INCHES WATER COLUMN (Unit of measure for testing gas line pressure)
TST = TOUCH SENSOR TECHNOLOGY (Refers to glass touch control panel)

SALES/MARKETING TERMS

Perfect Pair™ = Lower oven in the drawer below the main oven. Also called a Mini Oven.
IQ Touch™ = Control panel display style found on “B” model ranges.
Wave-Touch™ = Control panel display style found on “A” model ranges.

ES630 CONTROL SERIES
EOC FAILURE/FAULT CODES

For each Fault code there is a listing of the likely failure condition or cause, as well as suggested corrective actions to be taken. Perform the steps one at a time in the order listed below to correct the specific failure condition.

Note: Fault codes are not a foolproof system. Never assume that a part has failed based on a displayed fault code. An example would be if the EOC is displaying F30 (open sensor), the failure could be caused by a loose connection or faulty wire harness between the EOC and sensor or the sensor could simply be unplugged.

FAULT CODE	LIKELY FAILURE CONDITION/CAUSE	SUGGESTED CORRECTIVE ACTION
F10	Runaway Temperature. Oven heats when no cook cycle is programmed.	1. Check RTD Sensor Probe using the RTD scale found in the tech sheet. Replace if defective. 2. If oven is overheating dsiconnect power from the range and unplug connector P1 from power supply board 1. Reapply power to the range. If oven continues to heat when the power is reapplied, replace the oven relay board. 3. Replace the EOC NOTE: Severe overheating may require the entire oven to be replaced should damage be extensive.
F11	Shorted Keypad	1. Reset power supply to range to see if failure code will clear. 2. Check/reseat ribbon harness connections between TST panel and EOC. 3. Rplace the TST panel 4. Replace the EOC
F13	Internal software error in EOC	Disconnect power, wait 30 seconds and reapply power. If fault returns upon power-up, replace EOC.
F14	TST Display tail missing or not connected	1. Check/reseat ribbon harness connections between TST panel and EOC. 2. Replace the TST panel 3. Replace the EOC
F15	Signal loss between oven relay board and EOC	1. Test the harness and connections from EOC connector P16 to oven relay board J2. 2. Replace the oven relay board 3. Replace the EOC
F20 **Electric Models Only**	Communication failure between EOC and ESEC	1. Test wiring harness and connections between EOC connector P2 and ESEC 30 UIB P9 2. Test wiring harness and connections between ESEC 30 UIB and ESEC 20 relay board 3. Test wiring harness and connections between PS board 2 (P2) and ESEC 30 UIB connector P7 4. Test for approximately 9 volts DC output from PS board 2 at ESEC 30 UIB connector P7, pins 1 & 5. If output voltage is incorrect test incoming power supply to PS board 2 at harness connector P1 pins 1 & 4. If incoming power is correct (120 VAC) replace PS board 2. If output voltage is correct replace ESEC 30 UIB 5. Replace EOC
F23 F25	Communication failure between VSC board and EOC	1. Check harness and connections between VSC board and EOC. 2. Test for approximately 5 volts DC to VSC board at P6 connector pins 1 & 6. If voltage is correct replace VSC board. If voltage is incorrect replace EOC.
F30 F31	Open probe connection. Shorted Probe connection	1. (F30 or F31) Check resistance at room temperature & compare to RTD Sensor resistance chart. If resistance does not match the RTD chart replace RTD Sensor Probe. Check Sensor wiring harness between EOC & Sensor Probe connector. 2. (F30 or F31) Check resistance at room temperature, if less than 500 ohms, replace RTD Sensor Probe. Check for shorted Sensor Probe harness between EOC & Probe connector.
F90	Door lock motor latch failure	***If latch motor does not run*** when clean cycle is selected: 1. Check to see if latch motor coil is open. If open, replace latch motor assembly. 2. Test for 120 volts to the terminals of the latch motor. If voltage is correct and motor does not run replace latch motor assembly. If voltage is not correct replace EOC. ***If latch motor runs*** when clean cycle is selected. 1. Check the wiring harness between EOC & latch motor switch. Repair or replace harness as needed. 2. Test operation of the switch contacts. Replace latch motor assembly if defective. 3. Check for binding of the latch cam, latch motor rod & latch motor cam. 4. If all situations above do not solve problem, replace EOC.

Gas Conversion

Only the IQ touch models are convertible. The Wave touch models can only be purchased in Natural or LP. The reason is UL and AGA will not approve any gas range with a mini oven for LP conversion due to the difficulty and disassembly required to access the oven bake burner orifice to perform the conversion.

WARNING This conversion kit must be installed by a qualified service technician in accordance with the manufacturer's instructions and all applicable codes and requirements of the authority having jurisdiction. Failure to follow instructions may result in fire, explosion or production of carbon monoxide causing property damage, personal injury or loss of life. The qualified service agency is responsible for the proper installation of this kit. The installation is not proper and complete until the operation of the converted appliance is checked as specified in the manufacturer's instructions supplied with this kit.

CAUTION Before proceeding with the conversion, shut off the gas supply before disconnecting electrical power to the range. Be sure both power supplies are off before installing the conversion kit. Failure to do so could cause serious bodily injury.

Note: When surface burners are converted from Natural to L.P. the BTU ratings become:

5,000 BTU* Natural Gas to 4,500 BTU* L.P. Gas
9,500 BTU* Natural Gas to 8,000 BTU* L.P. Gas
14,200 BTU* Natural Gas to 11,000 BTU* L.P. Gas
16,200 BTU* Natural Gas to 14,000 BTU* L.P. Gas

Note for Dual Fuel models only:

To complete the L.P. installation for Dual Fuel it will be necessary to complete steps 1, 2, 5, 6 & 9 ONLY. Dual Fuel models do not have Oven or Broiler Burners orifices to adjust.

L.P. Kit Contents Kit **P/N 316243716** (grey label)

Part Description	Part Number	Qty.
Surface Burner Orifice marked 0.68mm 4,500 BTU* (blue)	316237907	1
Surface Burner Orifice marked 0.89mm 8,000 BTU* (no color)	316237906	2
Surface Burner Orifice marked 0.95mm 11,000 BTU* (red)	316237904	1
Surface Burner Orifice marked 1.15mm 14,000 BTU* (black)	316237910	1
L.P. Kit Installation Instructions	316417506	1

***Note: For operation at elevations above 2000 ft., appliance rating shall be reduced at the rate of 4 percent for each 1000 ft. above sea level.**

How to Convert the Range for use with LP/ Propane Gas

1. Convert the Pressure Regulator (complete this step for ALL models):

To access the gas regulator, remove the storage drawer or Warmer Drawer. If equipped with a storage drawer, open & remove the drawer completely. For models equipped with a Warmer Drawer, follow the instructions below to remove the Warmer Drawer.

a. **WARNING** Electrical Shock Hazard can occur and result in serious injury or death. Disconnect electrical power to the range before removing the Warmer Drawer for servicing.
b. Locate glide lever on each side of drawer, pull up on the left glide lever and push down on the right glide lever (See Fig. 1).
c. Pull the Warmer Drawer away from the range (See Fig. 2).
d. Remove the regulator access cover if equipped. **Do not remove the Pressure Regulator or allow it to turn.**
e. Remove the dust protector from the cap (Gas models). Use the proper size wrench to remove the cap from the regulator(All models).
f. Follow the remaining instructions provided in **Fig. 3A for GAS models** or **Fig. 3B for DUAL FUEL models**.

NOTE: After replacing the natural gas to LP orifices, be sure to keep the original factory installed natural gas orifices for future range conversion back to natural gas.

Tools Required:

3/8", 1/2" and 5/8" Open End Wrench

1/8" Wide Flat Blade Screwdriver

7mm Nutdriver

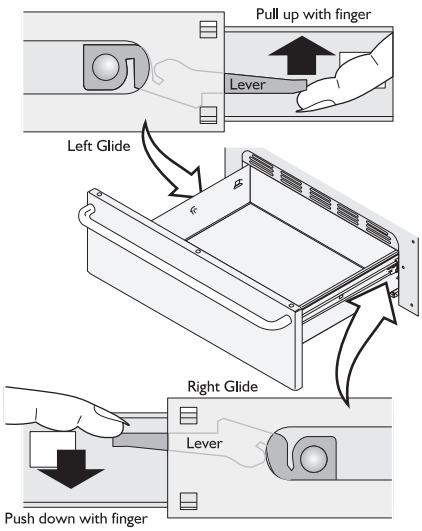

Fig. 1

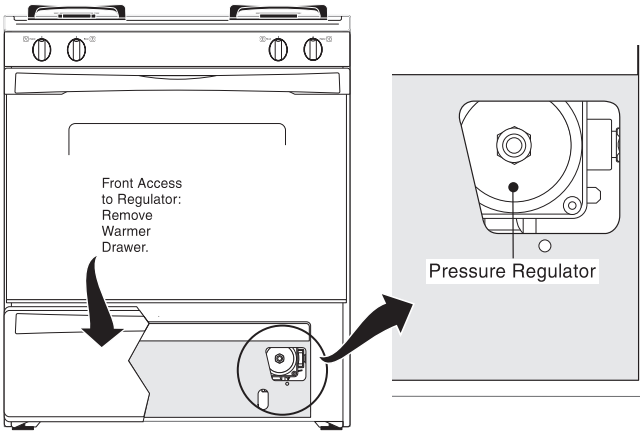

Fig. 2

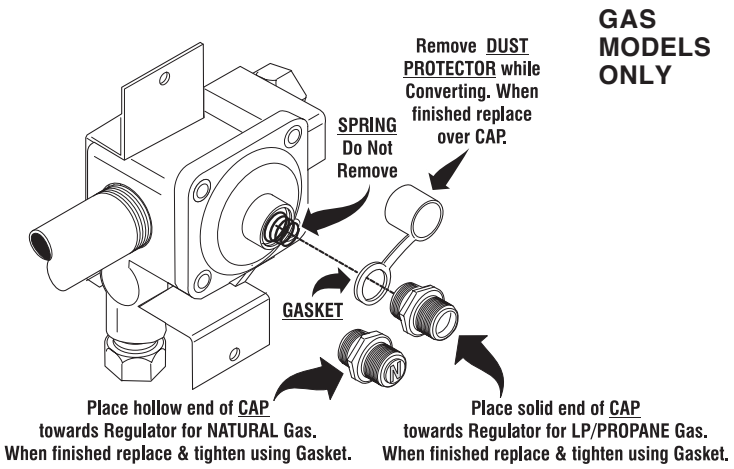

Fig. 3A

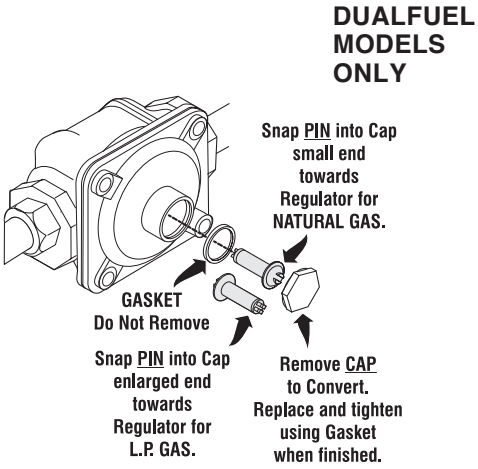

Fig. 3B

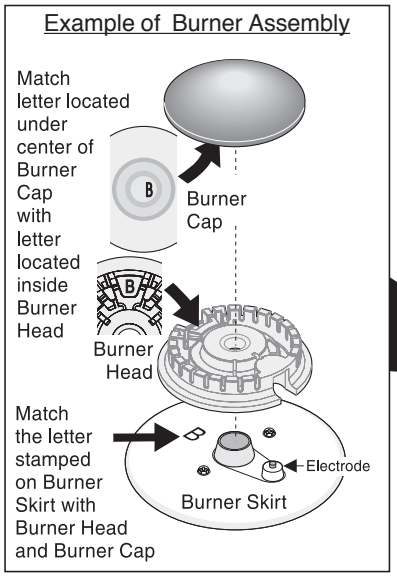

Fig. 4

Cooktop Layout

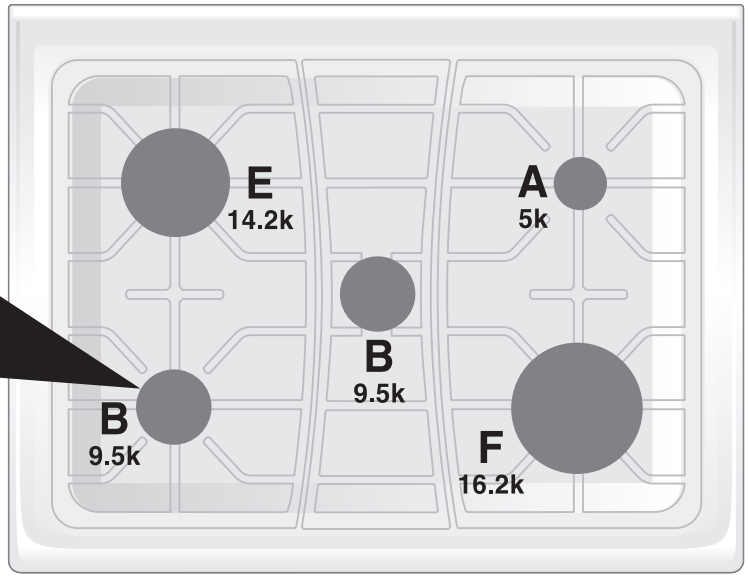

Front of cooktop

Fig. 5

2. Convert Surface Burners for use with LP/Propane Gas (complete this step for ALL models):

CAUTION Unlike the standard gas range, **THIS COOKTOP IS NOT REMOVABLE**. Do not attempt to remove this cooktop.
Save the natural gas orifices removed from the appliance for possible future conversion back to natural gas.

For all burner locations:

a. Remove Burner Grates & Burner Caps.
b. Use your hand to remove the Burner Heads.
c. Remove 5 factory installed natural gas orifices from the center of the orifice holders using a 7 mm nutdriver (See Fig. 6).
d. Replace the orifice in each of the 5 orifice holders with kit supplied LP/Propane gas orifice **(refer to the LP Kit chart listed on page 1; also refer to Fig. 5 for the correct LP orifice installation at each of the 5 surface burner locations)**. Tighten each orifice until snug. Use CAUTION not to overtighten.
e. Replace all the burner Heads & Caps. Match the letter located under center of Burner Cap with letters located inside the Burner Heads (See Figs. 4 & 5).
f. Match the letter stamped on the Burner Skirt with the Burner Head and Burner Cap. Each of the five Burner Heads **MUST** have a Burner Cap installed to insure proper ignition and gas flame size. Note: The Burner Electrodes must be located properly in slot of each Burner Head (See Fig. 4).

WARNING
Use caution when replacing each burner cap so the electrode is not damaged.

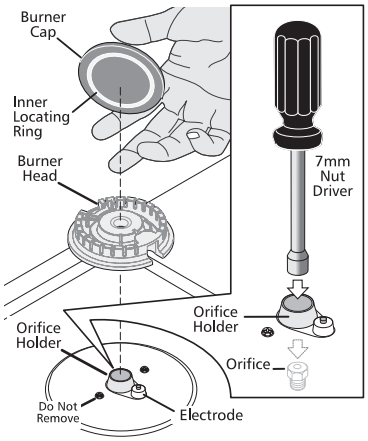

Fig. 6

3. Convert Oven Burner Orifice for LP/Propane Gas 16,000 BTU* (Skip this step if a Dual Fuel model):

a. Locate the oven burner spud (See Fig. 7).
b. Using a 1/2" wrench, turn down the adjustable spud, which injects gas into the oven burner, until snug against the LP/Propane metering pin (approximately 2-1/2 turns). **Do not over tighten.**

4. Convert Waist-High Broiler Burner Orifice Flame for LP/Propane Gas (13,500 BTU*) — (Skip this step if a Dual Fuel model):

a. Open the oven door.
b. Locate the broiler burner spud and turn down until snug against the LP/Propane metering pin (approximately 1 to 1-1/2 turns). **Do not over tighten** (See Fig.7).

5. Reconnect Gas & Electrical Supply to Range
(complete this step for ALL models):

Leak testing of the appliance shall be conducted according to the Installation Instructions provided with the Range.

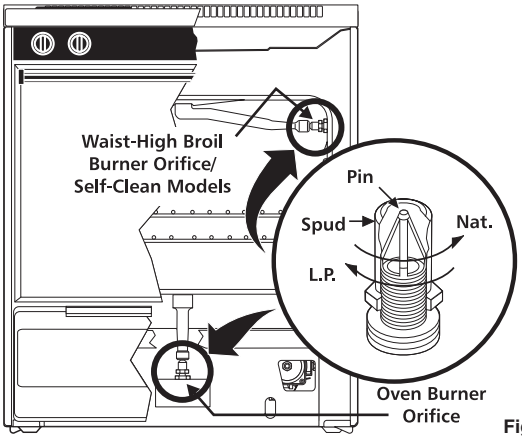

Fig. 7

Checking Manifold Gas Pressure

If it should be necessary to check the manifold gas pressure, remove the burner and connect a manometer (water gauge) or other pressure device to the top right front burner orifice. Using a rubber hose with inside diameter of approximately 1/4," hold tubing down tight over orifice. Turn burner valve on. For an accurate pressure check, have at least two (2) other surface burners burning. Be sure the gas supply (inlet) pressure is at least one inch above specified range manifold pressure. The gas supply pressure should never be over 14" water column. When properly adjusted the manifold water column pressure is 10" for LP/Propane gas or 4" for Natural gas.

CAUTION Do not use a flame to check for gas leaks.

a. Disconnect the range and its individual shut-off valve from the gas supply piping system during any pressure testing of that system at test pressures greater than 14" of water column pressure (approximately 1/2" psig).
b. The appliance must be isolated from the gas supply piping system by closing its individual manual shut-off valve during any pressure testing of the gas supply piping system at test pressures equal to or less than 14" of water column pressure (approximately 1/2" psig).

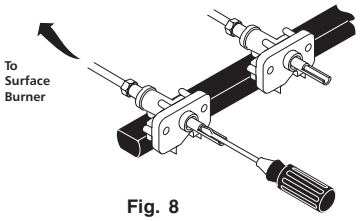

Fig. 8

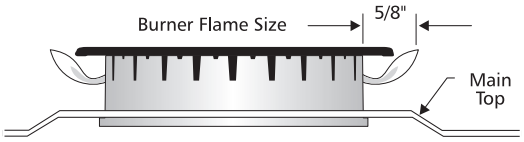

Fig. 9

6. Test to verify if "LOW" setting should be adjusted:
(complete this step for ALL models):

a. Push in & turn control to LITE until burner ignites.
b. Push in & quickly turn knob to LOWEST POSITION.
c. If burner goes out, reset control to OFF.
d. Remove the surface burner control knob.
e. Insert a thin-bladed screwdriver into the hollow valve stem and engage the slotted screw inside. Flame size can be increased or decreased with the turn of the screw. Turn counterclockwise to increase flame size. Turn clockwise to decrease flame size. (See Figs. 8 & 9).

Adjust flame until you can quickly turn knob from LITE to LOWEST POSITION without extinguishing the flame. Flame should be as small as possible without going out.

7. Adjust Air Shutter-Oven Burner (skip this step if a Dual Fuel model):

The air shutter for the oven burner may need adjustment, especially if the unit has been converted for use with LP/Propane gas. The approximate flame length of the oven burner is 1 inch (distinct inner blue flame; See Fig. 10).

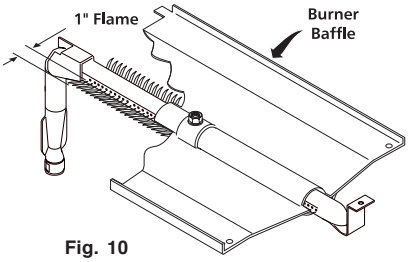

Fig. 10

To determine if the oven burner flame is proper:

a. To access the air shutter you must remove the Warmer Drawer, see instructions for Steps 1a, 1b & 1c.
b. Remove the oven bottom by removing the screws at rear of oven bottom. Lift up the rear of oven bottom and slide toward back of range to disengage from front of oven front frame.
c. Remove burner baffle by removing nut located on top of baffle and two screws from front edge of oven front frame. Lift baffle straight up and out of the oven.
d. Set the oven to bake at 350°F and observe the flame. If the flame is yellow in color, increase air shutter opening size. If the flame is a distinct blue color, but lifting away from the burner; reduce the air shutter opening size.
e. Turn off oven and allow to cool before adjusting air shutter. To adjust loosen lock-screw (See Fig. 11), reposition air shutter, and tighten lock-screw.

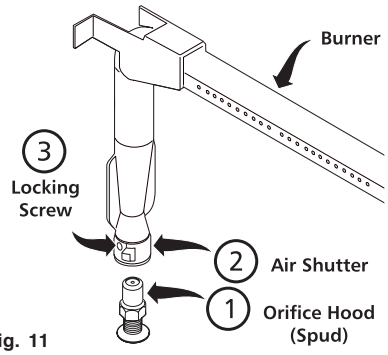

Fig. 11

Retest the burner by repeating step "d" above. When the burner flame is a distinct blue color burning steady, the air shutter is adjusted correctly.

f. Replace burner baffle & oven bottom.

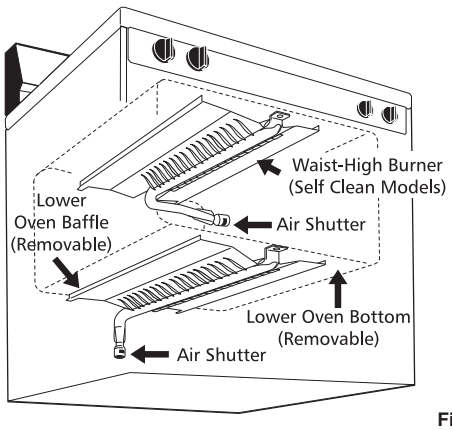

Fig. 12

8. Adjust Air Shutter-Broil Burner (skip this step if a Dual Fuel model):

a. Observe the flame to determine if the broiler burner flame is properly adjusted. It should be steady with approximately 1" blue cones and no yellow or orange flame tips (See Fig. 12).
b. If adjustment to the air shutter is necessary, locate the broiler burner air shutter (See Fig. 13), loosen shutter lock screw, and adjust to obtain optimum flame. This will normally be completely open for LP/Propane gas. If the flame is yellow in color, increase the air shutter opening size. If the flame is a distinct blue, but lifting away from the burner, reduce the air shutter opening size. Tighten the shutter set screw.

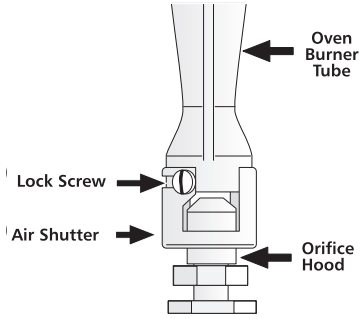

Fig. 13

9. Replace Warmer Drawer (complete this step for ALL models):

a. **Pull the bearing glides to the front** of the chassis glide (See Fig. 14).
b. Align the glide on each side of the drawer with the glide slots on the range.
c. Push the drawer into the range until levers "click" (approximately 2"). Pull the drawer open again to seat bearing glides into position. **If you do not hear the levers "click" or the bearing glides do not feel seated remove the drawer and repeat steps "a" through "c".** This will minimize possible damage to the bearing glides.

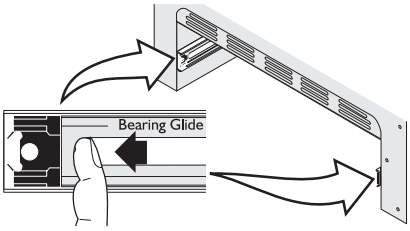

Fig. 14

CONVERSION BACK TO NATURAL GAS

If it becomes necessary to convert the range back to natural gas:

a. Disconnect gas & electrical supply from range.
b. Convert pressure regulator (See Step 1 and Fig. 3A for Gas models or Fig. 3B for Dual Fuel models).
c. Remove the five LP burner orifices using 7mm nutdriver & replace with the five original factory installed natural gas orifices at their original locations (See Fig. 5 for locations).
d. Convert Oven Burner Orifice for Natural Gas by loosening spud counter-clockwise (See Step 3; approximately 2-1/2 turns; skip this step if a Dual Fuel model).
e. Convert Waist-High Broiler Burner Orifice for Natural Gas by loosening spud counter-clockwise (See Step 4; approximately 1 to 1-1/2 turns; skip this step if a Dual Fuel model).
f. Re-adjust LO (Low) Setting for Surface Burner Valves following instructions (See Step 6).
g. Readjust Oven & Broil Burner Air Shutters. (See steps 7 & 8; skip this step if a Dual Fuel model).

Schematic Diagram- Gas “A” Models with Mini Oven

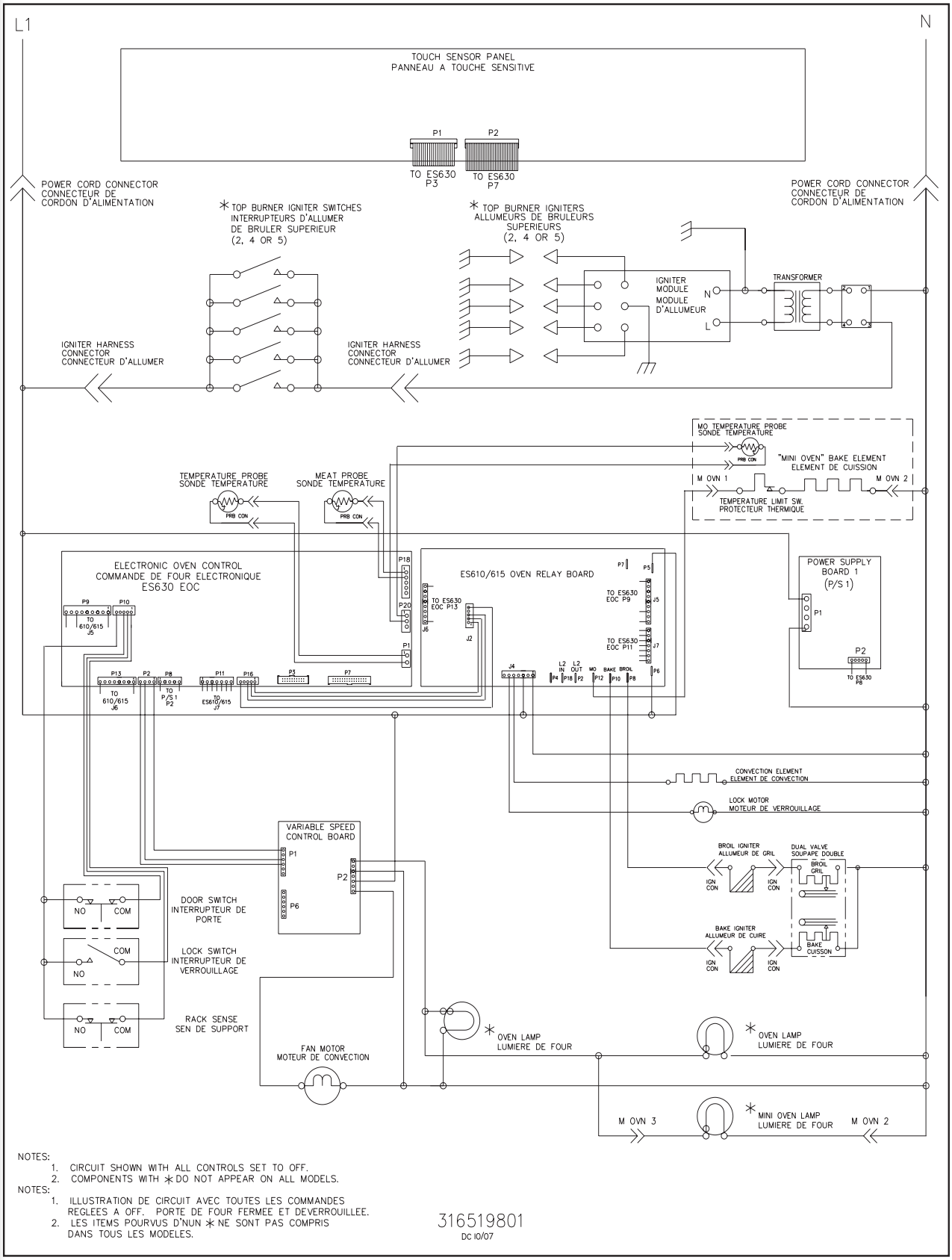

NOTES:
1. CIRCUIT SHOWN WITH ALL CONTROLS SET TO OFF.
2. COMPONENTS WITH * DO NOT APPEAR ON ALL MODELS.

NOTES:
1. ILLUSTRATION DE CIRCUIT AVEC TOUTES LES COMMANDES REGLEES A OFF. PORTE DE FOUR FERMEE ET DEVERROUILLEE.
2. LES ITEMS POURVUS D'NUN * NE SONT PAS COMPRIS DANS TOUS LES MODELES.

316519801
DC 10/07

Wiring Diagram - Gas “A” Models with Mini Oven

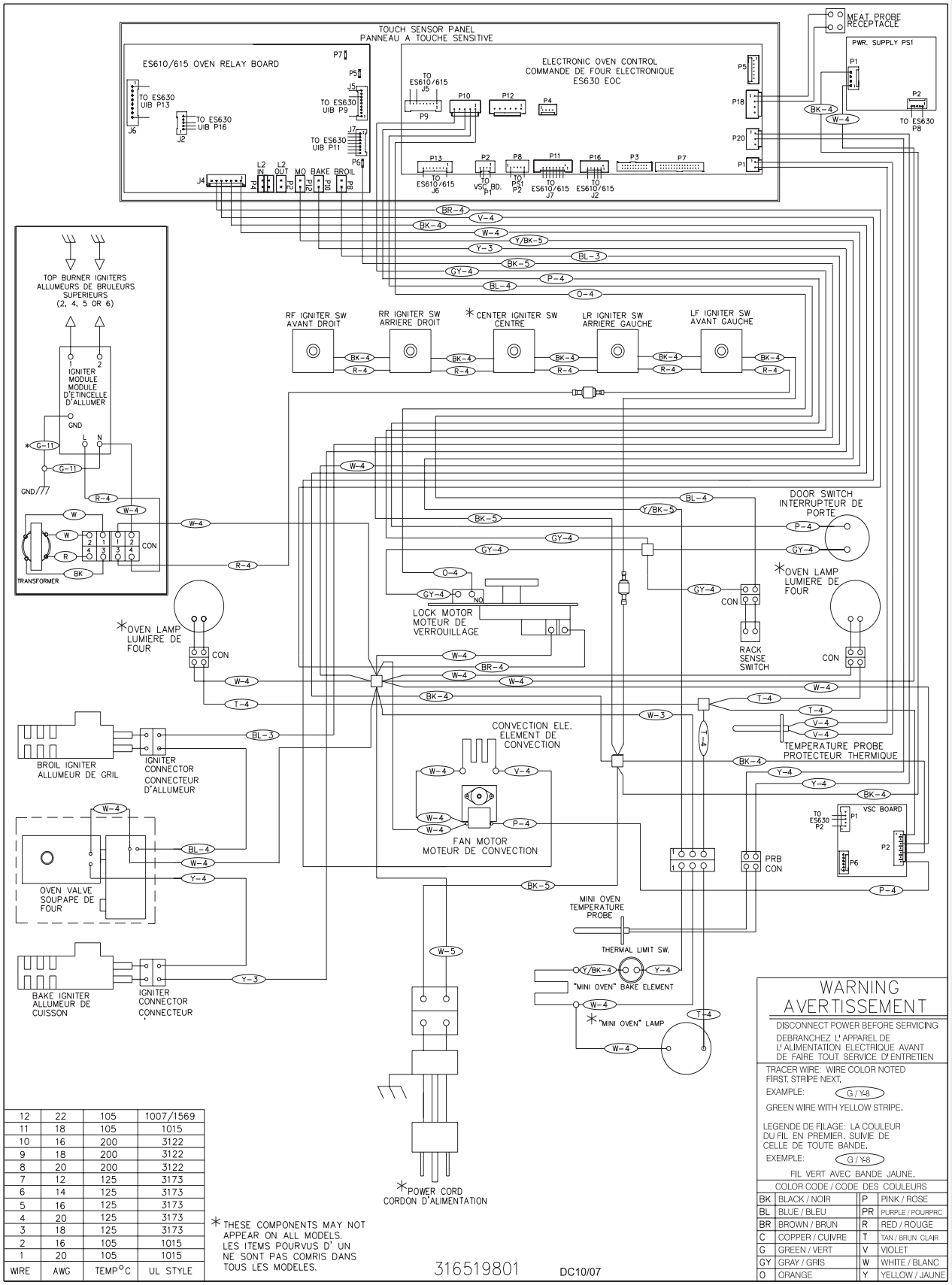

WIRE	AWG	TEMP°C	UL STYLE
12	22	105	1007/1569
11	18	105	1015
10	16	200	3122
9	18	200	3122
8	20	200	3122
7	12	125	3173
6	14	125	3173
5	16	125	3173
4	20	125	3173
3	18	125	3173
2	16	105	1015
1	20	105	1015

* THESE COMPONENTS MAY NOT APPEAR ON ALL MODELS.
LES ITEMS POURVUS D' UN NE SONT PAS COMRIS DANS TOUS LES MODELES.

316519801 DC10/07

Schematic Diagram - Gas “B” Models with Warming Drawer

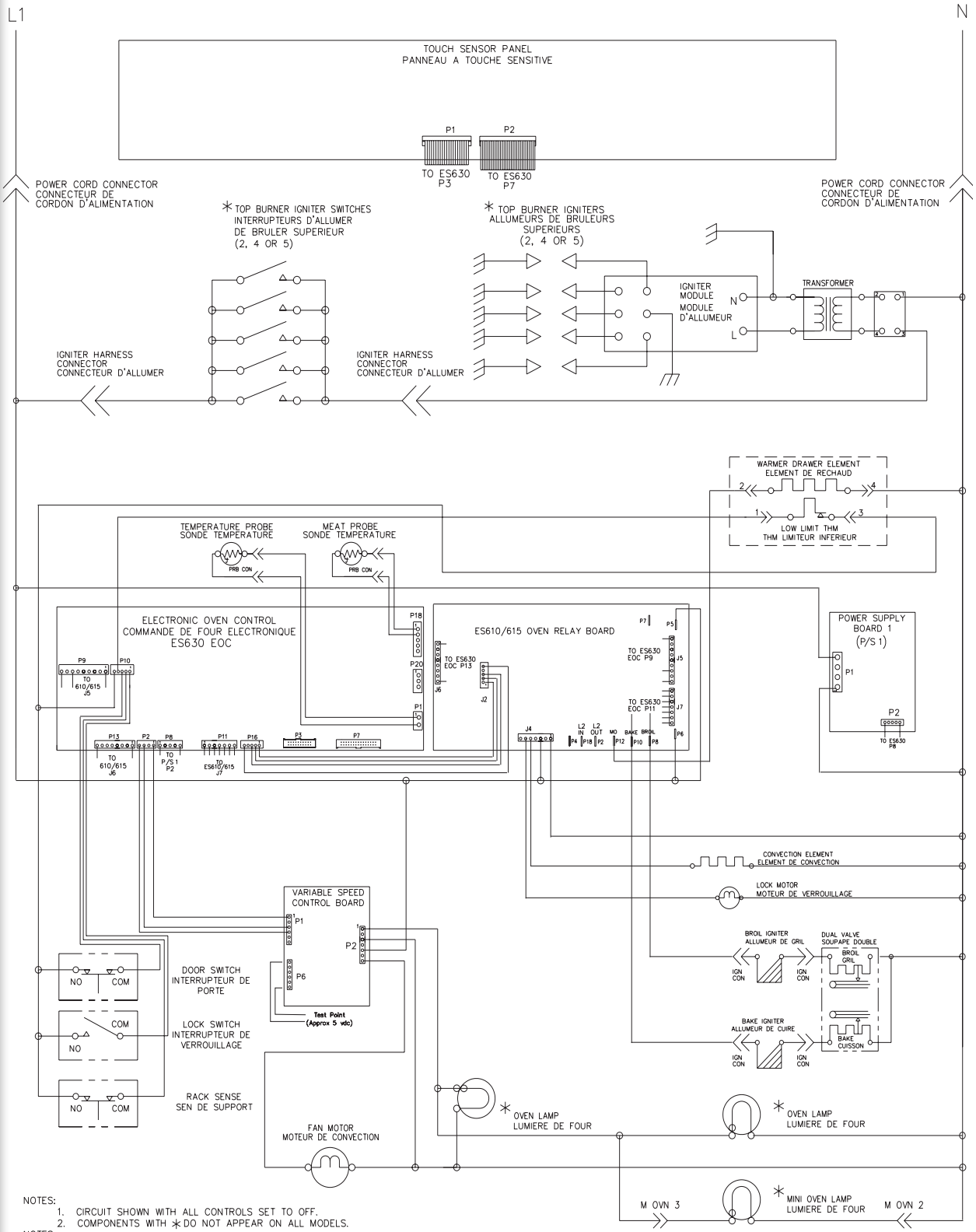

NOTES:
1. CIRCUIT SHOWN WITH ALL CONTROLS SET TO OFF.
2. COMPONENTS WITH * DO NOT APPEAR ON ALL MODELS.

NOTES:
1. ILLUSTRATION DE CIRCUIT AVEC TOUTES LES COMMANDES REGLEES A OFF. PORTE DE FOUR FERMEE ET DEVERROUILLEE.
2. LES ITEMS POURVUS D'NUN * NE SONT PAS COMPRIS DANS TOUS LES MODELES.

316519800 DC I007

Wiring Diagram - Gas “B” Models with Warming Drawer

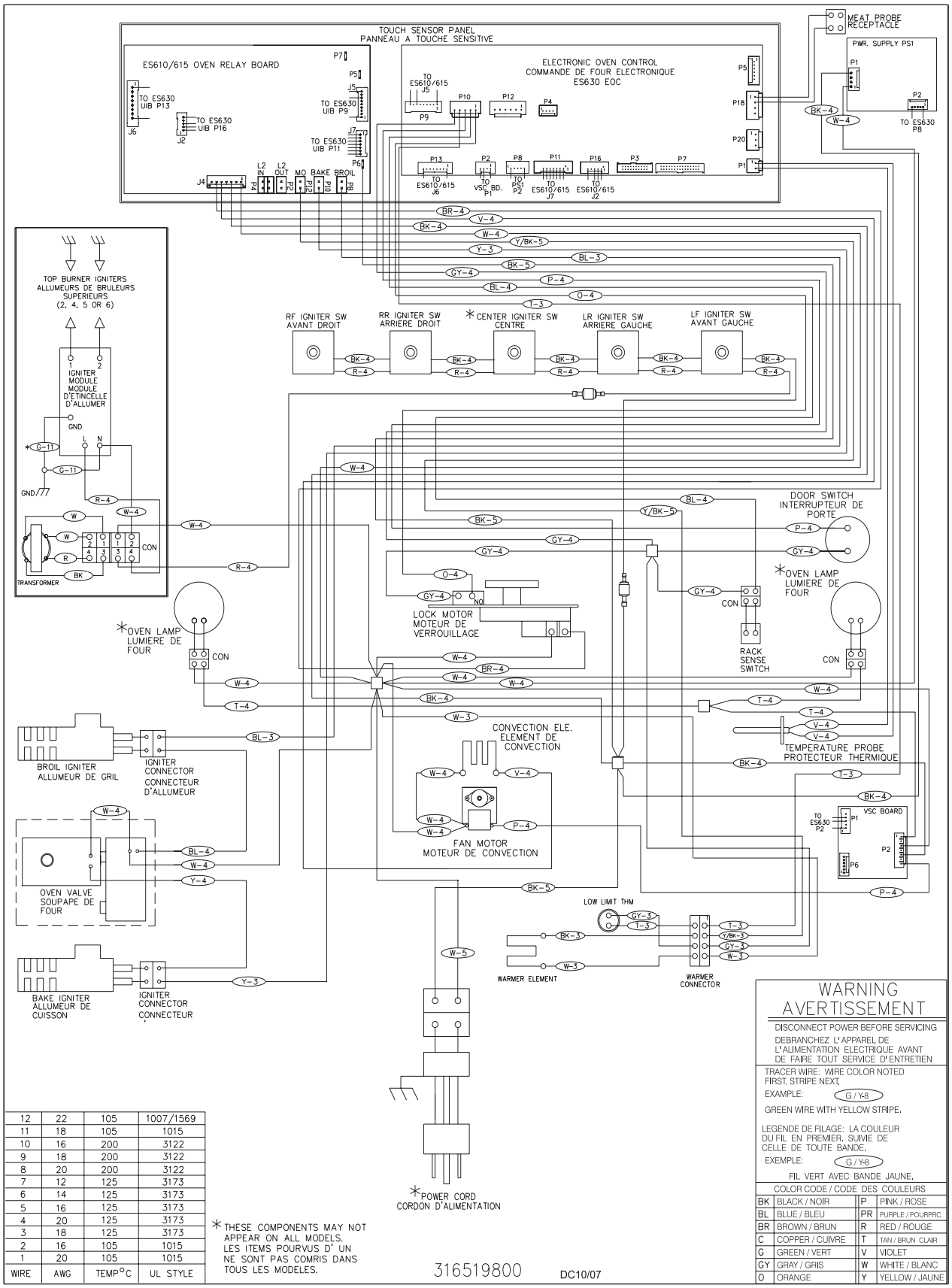

WIRE	AWG	TEMP°C	UL STYLE
12	22	105	1007/1569
11	18	105	1015
10	16	200	3122
9	18	200	3122
8	20	200	3122
7	12	125	3173
6	14	125	3173
5	16	125	3173
4	20	125	3173
3	18	125	3173
2	16	105	1015
1	20	105	1015

* THESE COMPONENTS MAY NOT APPEAR ON ALL MODELS. LES ITEMS POURVUS D' UN NE SONT PAS COMRIS DANS TOUS LES MODELES.

316519800 DC10/07

WARNING
AVERTISSEMENT

DISCONNECT POWER BEFORE SERVICING
DEBRANCHEZ L' APPAREL DE L' ALIMENTATION ELECTRIQUE AVANT DE FAIRE TOUT SERVICE D' ENTRETIEN

TRACER WIRE: WIRE COLOR NOTED FIRST, STRIPE NEXT.
EXAMPLE: G / Y-8
GREEN WIRE WITH YELLOW STRIPE.

LEGENDE DE FILAGE: LA COULEUR DU FIL EN PREMIER, SUIVIE DE CELLE DE TOUTE BANDE.
EXEMPLE: G / Y-8
FIL VERT AVEC BANDE JAUNE.

COLOR CODE / CODE DES COULEURS

BK	BLACK / NOIR	P	PINK / ROSE
BL	BLUE / BLEU	PR	PURPLE / POURPRC
BR	BROWN / BRUN	R	RED / ROUGE
C	COPPER / CUIVRE	T	TAN / BRUN CLAIR
G	GREEN / VERT	V	VIOLET
GY	GRAY / GRIS	W	WHITE / BLANC
O	ORANGE	Y	YELLOW / JAUNE

Touch Sensor Technology(TST) Control System

The TST system utilizes a touch sensitive glass panel (photo A) to allow the user to control all oven and warmer drawer operations. The TST panel is connected to the electronic oven control (EOC) and the electronic surface element control (ESEC) system UIB (user interface board) via ribbon connectors. It is similar in function to a membrane switch.

The TST control panel generates an electromagnetic field around each touch pad. When this field is interrupted by touching the glass, the control panel communicates the selection information to the EOC or ESEC system . The EOC or ESEC system then responds by signaling the oven relay board or surface element control board to close the appropriate relays to perform the selected operation or function.
NOTE: The TST system touch glass is a non serviceable part and must be replaced as a complete assembly if found to be defective. The replacement glass panel will come attached to the frame and will include ribbon connectors. (Photo B)

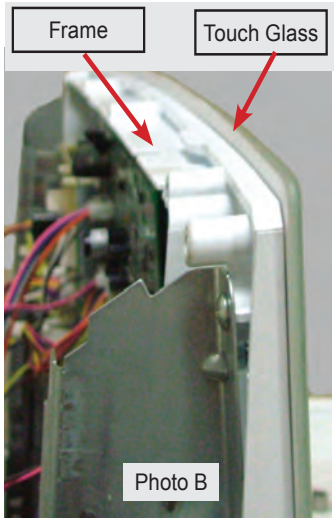

Troubleshooting The TST Panel

The TST control panel has ribbon connectors that link it to the EOC. (Photo C).
If these connectors fail or become loose the TST control panel will not operate and under some conditions will generate a fault code in the EOC display window.
If the TST control malfunctions or fails to operate inspect and re-seat the ribbon connectors. If a failure/fault code is present follow the diagnostic procedure for that code.

If no fault code appears but the EOC does not respond when the TST panel is touched then the cause is either a defective EOC or TST panel. Replace the EOC first. If the problem remains replace the TST panel assembly.
If only a single key is non responsive then the TST panel is the most likely cause of failure.

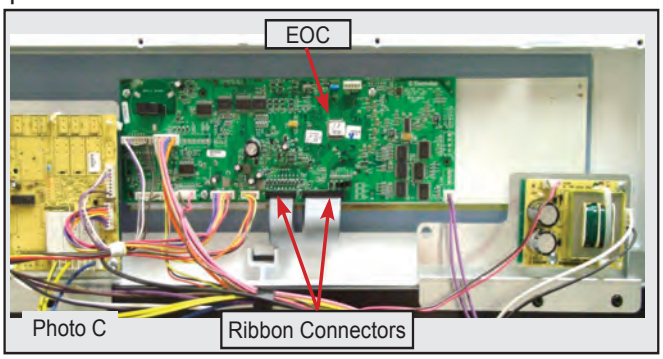

Gas Oven Control

The Electrolux branded ranges covered in this manual feature the ES630 Electronic Oven Control (EOC) . This control system is comprised of the Electronic Oven Control Board, Oven Relay Board, and Power Supply Board. The ES630 control interfaces with the TST (Touch Sensor Technology) panel to allow the consumer to select the desired function and options.
There are currently two different versions of the TST control panels sometimes referred to as “A” and “B” versions. Other terms used to refer to the different control styles are: “Wave-Touch™” for the A model and “ IQ Touch™” for the B model.

The most obvious difference is the appearance of the control panels when they are in an idle state.
The Wave-Touch™ display panel has a “sleep mode” that turns off the illuminated control icons on the touch panel whenever the range is idle for 2 minutes (Diag A). During this sleep mode only the time of day will be illuminated in the control panel.

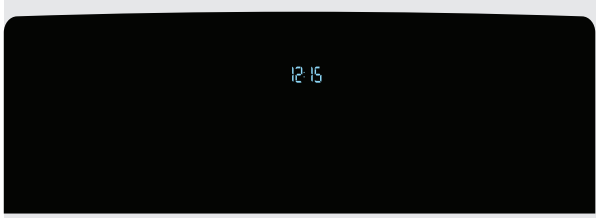

Diag.A

To wake the control simply touch the glass surface. The touch control keypads will illuminate to allow the user to program the desired function (Diag B).

Diag. B

The IQ Touch™ display panel has permanent graphics imprinted in the glass panel and will remain visible at all times (Diag C).

Diag. C

In current models the Wave-Touch control is always used on ranges that feature the “Perfect Pair™ lower oven”, also referred to as a Mini Oven.
Models that have the IQ Touch control feature a warmer drawer instead of a mini oven.

EOC Troubleshooting & Testing

The Electronic Oven Control system found in the Electrolux freestanding ranges uses a separate oven relay board to power the individual components such as the bake and broil ignitor, lock motor, warmer drawer or mini oven element, etc. This is different from some other styles of electronic oven controls where the EOC and control relays are integrated in to a single component. The servicer must follow the troubleshooting and diagnostic information found in this manual and in the product tech sheet to accurately diagnose any failures and avoid unnecessary parts replacement.

Photo A shows the locations of the EOC Board, Oven Relay Board and Power supply board as seen from the rear of the range with the rear panel removed. The ribbon connectors to the TST panel can be seen at the bottom of the EOC circuit board.

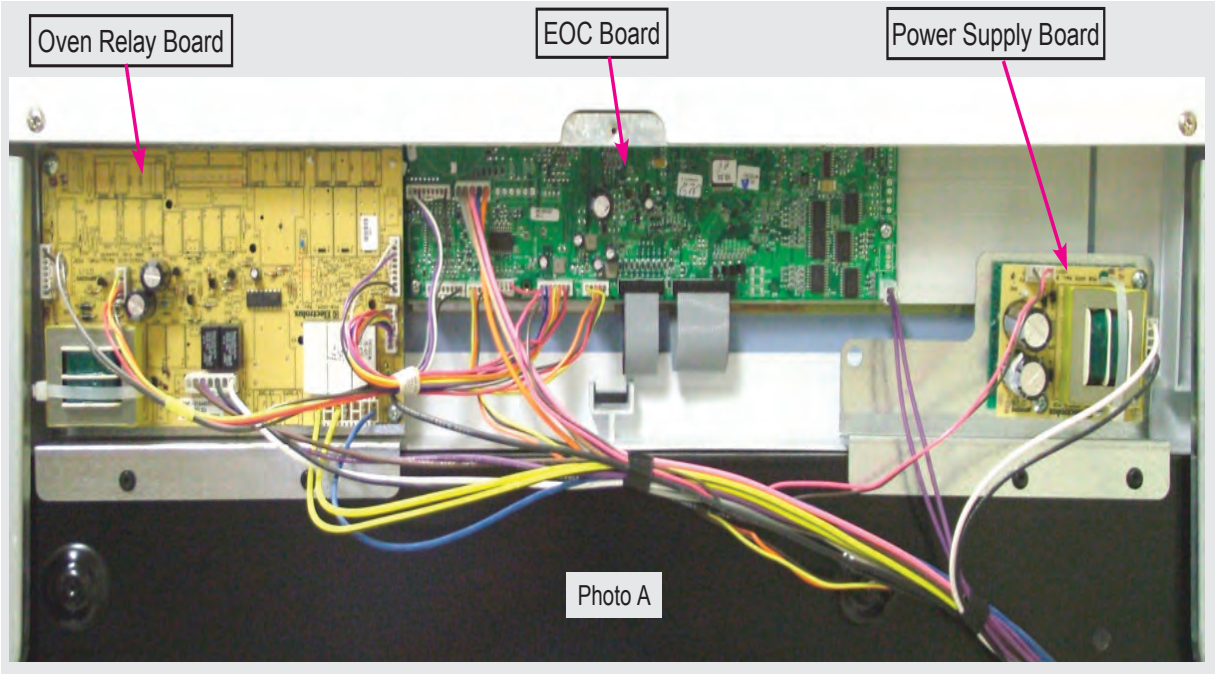

Photo A

If a component part that is controlled by the EOC fails to operate the cause could be due to a defect in the EOC, Oven Relay Board, wiring connections , or the non functioning component. Component parts like elements, fan motors, lock motors, etc. can be tested with a simple continuity check using an ohm meter. Verify the continuity of the component and the wiring circuit between the component to the relay board first. Also verify continuity of the wiring harness and connectors between the EOC and Oven Relay Board.
If the component and wiring connections are good test the output signal voltage from the EOC to the Relay board for the particular relay that turns on that component part. When testing the output signal set your volt meter to read DC voltage. The output signal will be approximately 3.3 volts DCV.

Using the **EOC SIGNAL VOLTAGE TEST MATRIX** it is possible to determine if the EOC is properly signaling the relay board to turn on a particular component. If the proper signal is detected but the relay does not close then the relay board is defective and must be replaced. If the proper signal is not detected then the EOC is defective and must be replaced.

EOC SIGNAL VOLTAGE TEST MATRIX

Test for 3.3 VDC (+/- .5 volts) between GND on EOC circuit board and the indicated connector pin when the specified function is activated.

FREESTANDING GAS "A" & "B" MODELS		
FUNCTION / RELAY	EOC CONNECTOR / PIN#	RELAY BOARD CONNECTOR / PIN #
Mini Oven or Warmer Drawer / K8	P11 / Pin 3	J7 / Pin 3
Broil / K4	P11 / Pin 1	J7 / Pin 1
Bake / K6	P11 / Pin 2	J7 / Pin 2
Convection Element / K10	P11 / Pin 5	J7 / Pin 5
Lock Motor / K12	P11 / Pin 6	J7 / Pin 6

When testing the signal voltage from the EOC the negative (-) lead of the test meter must connect the GND circuit on the EOC circuit board. The easiest access point to the GND circuit is located just above the left corner of the P11 connector. (Photo A).

Photo B demonstrates testing the Bake Relay signal voltage by measuring the voltage output between connector J7 pin#2 (red wire) and the GND circuit on the EOC circuit board on a gas range.

GND (-) CIRCUIT ACCESS POINTS

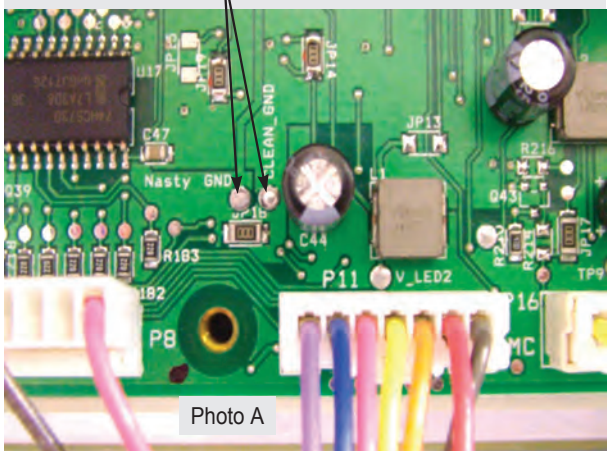

Photo A

BAKE RELAY SIGNAL VOLTAGE TEST

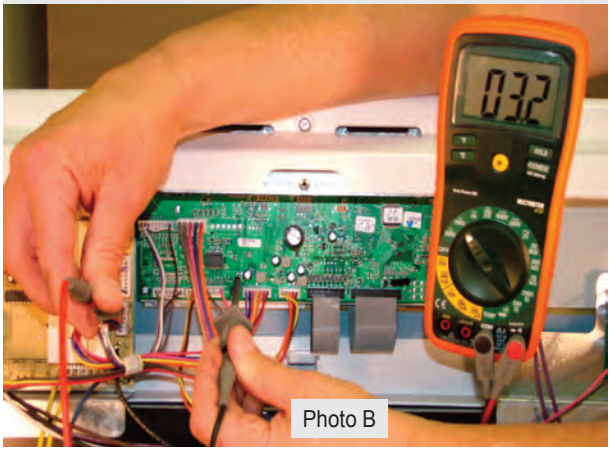

Photo B

Power Supply Board

The EOC is powered by separate power supply board that is mounted on the rear of the range chassis to the right of the EOC as seen in photo A.

Incoming voltage to the boards should be approximately 120 VAC at P1. Output voltage should be approximately 8 VDC at P2.

Always test the incoming and outgoing voltage at the power supply boards when troubleshooting EOC or ESEC control failures.

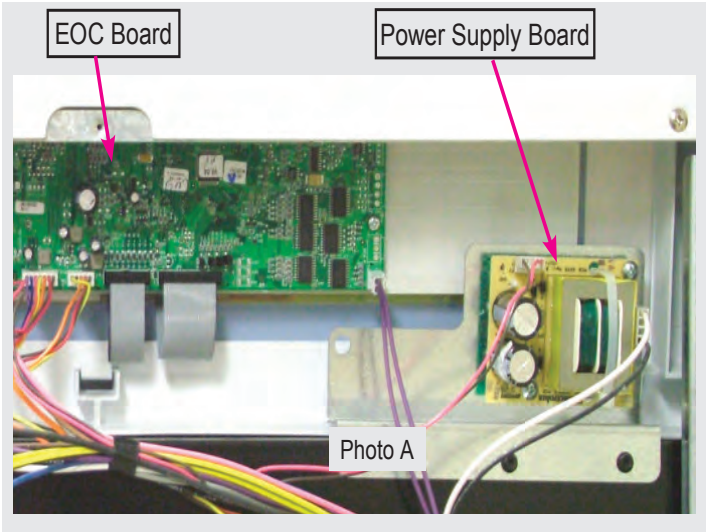

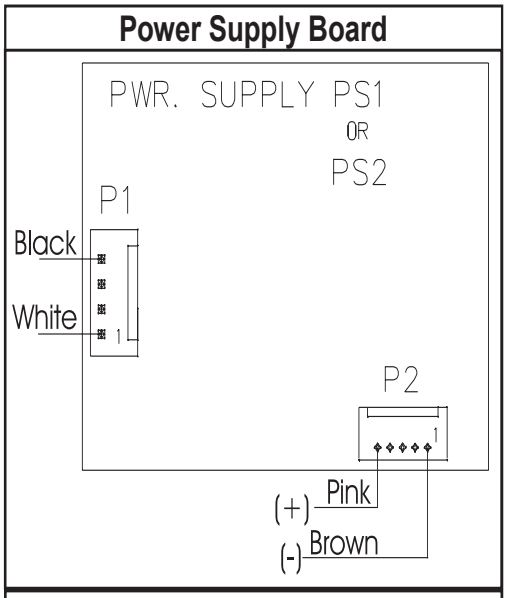

Power Supply Board (PS1 or PS2) Test Points
Connector P1 pins 1 & 4 - 120 vac
Connector P2 pins 1 & 5 - 8 vdc

NOTE: All voltages are approximate.

If there is a failure in the power supply board or wiring the EOC display will not illuminate and the oven components and other devices can not operate.

The Variable Speed Control (VSC) board operates the Convection Fan as well as the Oven LUXURY™ lighting. In the event that either of these features do not operate properly the VSC board should be examinied as a possible source of failure. When testing for convection fan operation it should be noted that on gas ranges there is a six minute delay from the start of the convection cooking cycle until the fan motor will run.

Variable Fan Speed

To achieve optimum cooking results during convection cooking the fan motor speed can be varied. The EOC will signal the VSC board to speed up or slow down the fan as needed. This speed change takes place automatically with no action required by the consumer.

The VSC Board is located on the rear of the range as seen in photo A. The board varies the voltage to the convection fan motor as directed by the EOC to alter the motor speed. The speed control signal and the power supply to operate the VSC board come from the EOC through a wiring harness connected between P2 on the EOC and P1 on the VSC board. This harness must be intact and properly connected for the VSC board to operate. If the harness is defective or not properly connected the EOC will display a fault code F23.

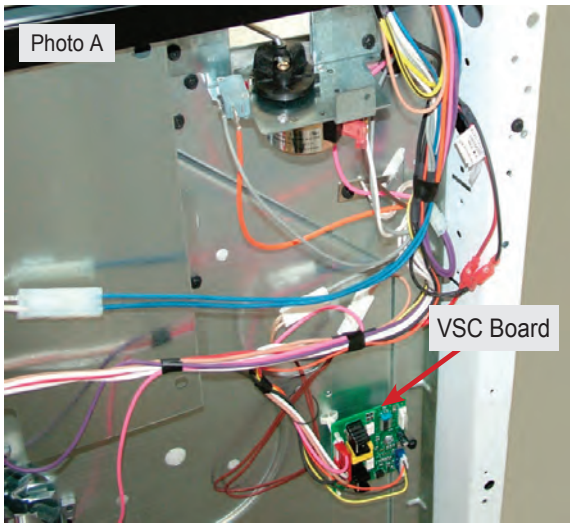

When testing the VSC board the power supply from the EOC to the board can be verified by measuring the voltage between pins 1 & 6 (the two outside pins) on connector P6 of the VSC board. This connector is not wired in field applications and the pins are easily accessed to test voltage while the other harness connectors are in place and power is applied to the range. Test for approximately 5 volts DC (+/- .5 volt) on these two pins. If the EOC appears to operate normally but the voltage to the VSC board is incorrect or if there is no voltage present inspect and test the wire harness and connectors between the EOC and VSC board. If the harness is good then the EOC is defective and should be replaced.

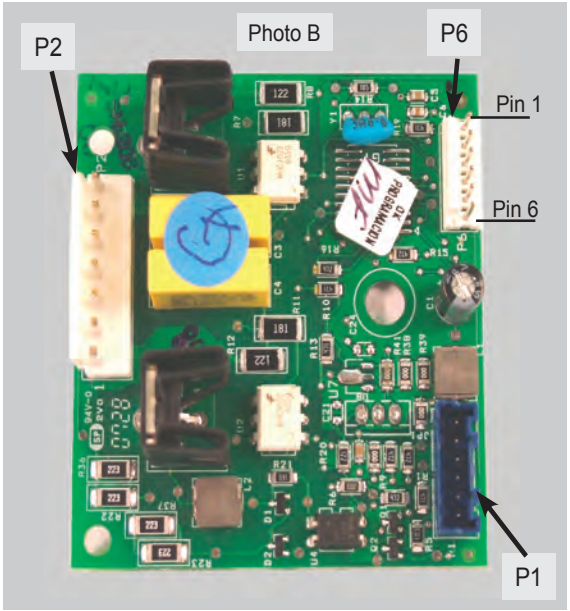

If the convection fan motor fails to run after the oven has been heating for six minutes test for voltage to the convection fan motor. If no voltage is present then the failure is either in the VSC board, EOC , or the wiring in between. If there is proper voltage to the fan motor but it does not run then either the motor windings are open or the motor is stuck. Test the continuity of the motor windings with an ohm meter. There should be approximately 15 ohms of resistance in the convection fan motor windings. If the windings test good inspect the fan blade and motor shaft to see if the motor will turn. Adjust the fan blade to eliminate binding or replace the motor assembly if the motor shaft is siezed.

Luxury™ Lighting

When the oven door is opened or the LIGHT keypad on the touch control panel is pressed the interior oven halogen lights come on and brighten gradually. When turned off they dim gradually until they are completely off. This feature is also sometimes referred to as “Ramp Up lighting”.
The incremental changing of the oven lights is controlled by the VSC board. A triac on the board gradually increases the voltage to the lights over a 2 - 3 second time span until the lights are on at full power.
If none of the halogen oven lights operate plug in the range and open the oven door. Test for approximately 120 volts AC at pins 1 & 3 of the P2 wire harness connector (brown & white wires) on the VSC board. Always use special care when making live voltage tests.

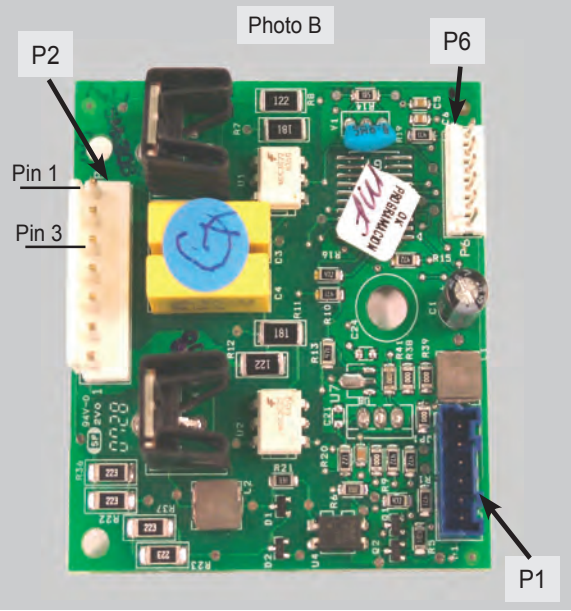

If the voltage is correct then the failure is caused by defective bulbs, sockets or wiring connections.
If the voltage is incorrect the problem could be caused by a defective door switch, VSC board, or EOC. Test the contacts of the oven door switch by disconnecting the P10 connector on the EOC and checking for continuity between the grey and pink wires in the wire harness.

Each light assembly houses a replaceable 40 watt bulb behind the clear lens.
To remove the lens use a thin bladed screwdriver or putty knife to gently pry the lens out. Take care not to damage the finish of the oven wall.

With the lens removed the bulb can be accessed. Remove the bulb by pulling it out of the porcelain base in the direction shown in the photo.
Use only the correct replacement bulb.
In the event that the socket or harness is defective the complete assembly with attached harness, bulb and lens must be replaced.

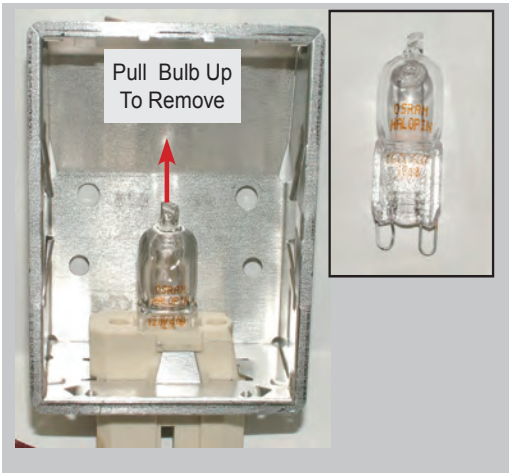

The light assembly is installed from the inside of the oven cavity.

When removing the old assembly it is recommended to tie a string to the end of the harness plug as the assembly is being removed. This string can then be used to fish the wire harness of the replacement assembly through the oven cavity liner and inner shield.

Always orient the assembly with the wire harness towards the center of the oven.

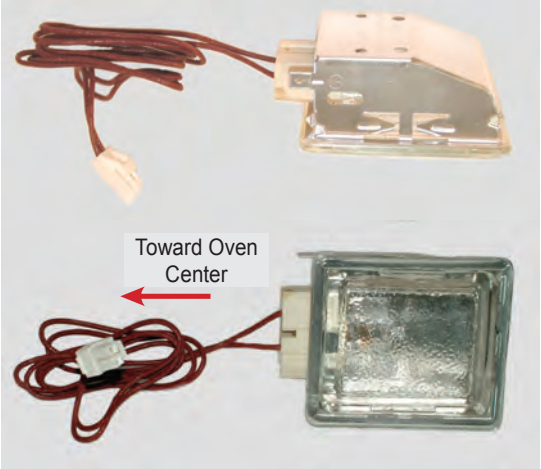

Rack Sensing Switch

In order to prevent damage to the extendable telescoping interior oven racks, the EOC will not perform a self clean cycle until the racks are removed. A rack sensing switch mounted in the rear of the oven liner signals to the EOC that the racks have been removed. (Photo A)

When the oven racks are installed the rear edge of the rack pushes against a pivoting rod on the rack sensor assembly causing a cam on the rod to depress the sensor switch. When the switch is depressed the switch contacts are open. As long as the switch contacts are open the EOC will assume that the racks are installed in the oven.
When the racks have been removed the cam of the sensor rod releases the pressure on the rack sensing switch allowing the switch contacts to close.
When the EOC detects that the rack sensing switch contacts are closed it will allow the self cleaning cycle to operate.

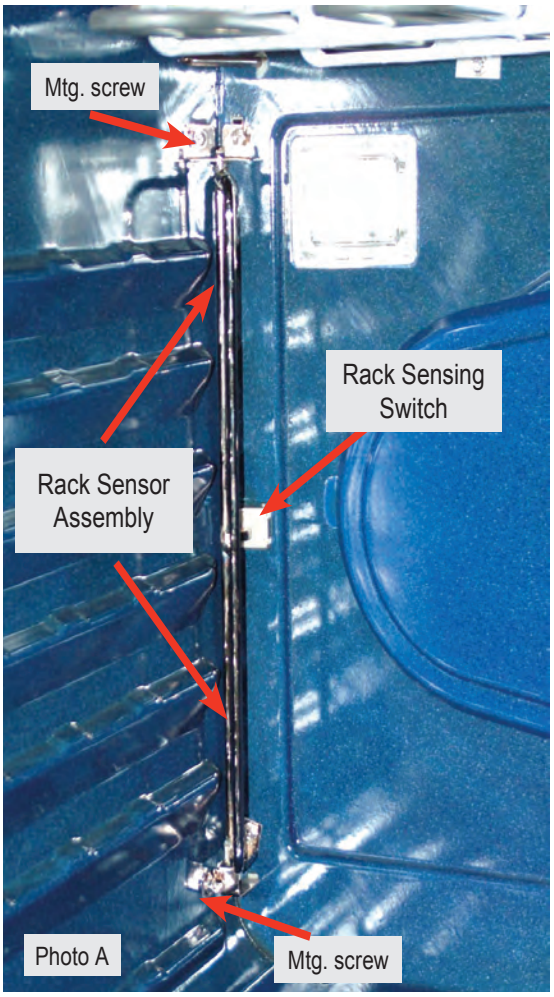

Photo A

If the customer starts a self cleaning cycle without removing the racks a message on the EOC will illuminate instructing them to remove the racks. (Photo B).
If the racks have been properly removed but the EOC displays the **REMOVE RACKS** message then the failure could be caused by defective switch contacts, wiring harness connections, stuck sensor rod assembly or defective EOC.
Examine the sensor assembly rod to be sure it can move freely. Also inspect the metal plunger cover on the switch to make sure it has not stuck. The sensor rod assembly can be removed for cleaning and lubricating if necessary.

Photo B

Rack Sensing Switch

To test the rack sense switch contacts remove the rear wire cover on the range and access the wire harness connector P10 on the EOC. (Photo A)
Unplug the harness and test for continuity between the blue & grey wires in the harness. When the racks are removed there should be less than 1 ohm of resistance if the switch contacts are closed.
If the switch contacts are closed but the EOC displays the “REMOVE RACKS” message then the EOC is defective.
If the switch contacts are open then test the switch through the harness plug on the switch itself. Unplug the harness connector (Photo B) and test for continuity between he brown wires of the harness.
If the switch contacts are open replace the switch. If the switch contacts are closed then the harness from the switch to the EOC is defective.

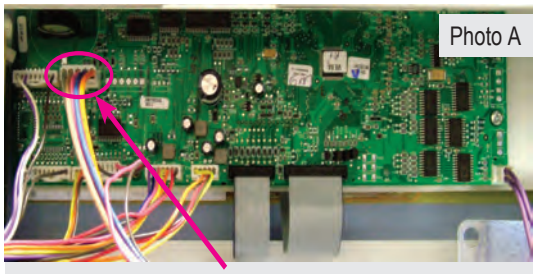

EOC P10 Connector

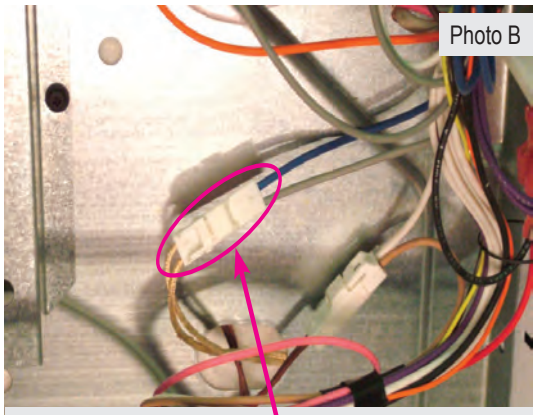

Rack Switch Harness Connector

Rack Switch Replacement

The rack sensing switch is installed into a cutout in the oven liner rear wall. (Photo C)
To replace the switch first turn off the power to the range and remove the lower back cover panel.
Unplug the harness connector (Photo B) and tie a 36 inch length of strong string or cord to the end of the connector that is attached to the switch. Secure the other end of the string so that it can not pull all the way through.
From inside the oven remove the rack sensor assembly by taking out the two screws at the top and bottom of the assembly. (Page 25 - Photo A).
Depress the tabs on the switch (Photo D) to release it from the cutout and carefully pull the switch with the attached wire harness inside the oven cavity.
Attach the string to the new switch harness and carefully pull the harness back through the oven liner and insulation .

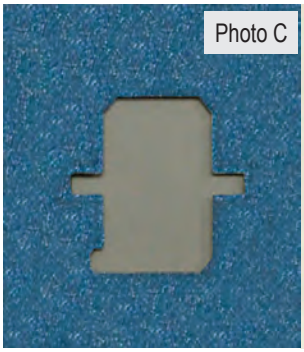

Theory Of Operation

Some models feature a meat probe that is used to monitor the internal temperature of the food during cooking. The meat probe is a RTD (Resistance Temperature Device) similar to the oven temperature sensor found in ranges with electronic oven controls. As the temperature of the meat probe increases the resistance decreases. The E O C monitors this resistance whenever the probe is inserted into the receptacle and uses this information to determine when the food has reached the target temperature.

Component Parts

The components of the meat probe feature are: Probe assembly (Fig 1) and the receptacle assembly which includes the wire harness (Fig 2).

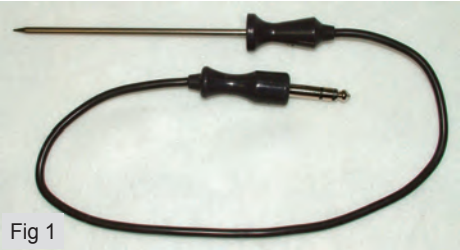
Fig 1


Fig 2

Troubleshooting

Possible failures of the meat probe feature are:

- Loose wire or harness connection.
- Defective receptacle and wiring harness.
- Defective meat probe.
- Defective Electronic Oven Control.

To troubleshoot the meat probe feature first test the probe itself by using an ohm meter to measure resistance. Place one of the meter leads on the very tip of the probe plug and the other lead on the adjacent short segment as indicated in the photo.

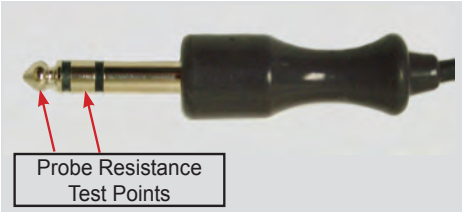

The resistance will vary depending on the actual temperature of the probe. At a room temperature of 77 degrees the resistance will measure approximately 46,000 ohms.

To test the accuracy of the probe place the metal wand end into a container of water that has a temperature of 120 degrees Fahrenheit and measure the resistance. At 120 degrees the resistance should be between 17,860 ohms and 19,740 ohms. If the resistance is incorrect replace the probe.
If the probe resistance is correct plug the probe into the receptacle inside the oven and disconnect the probe harness connector from the E O C connection P 18.

Measure the resistance between the two wires in the harness plug. If the resistance is approximately equal to the resistance of the probe then the harness and receptacle circuit are good.

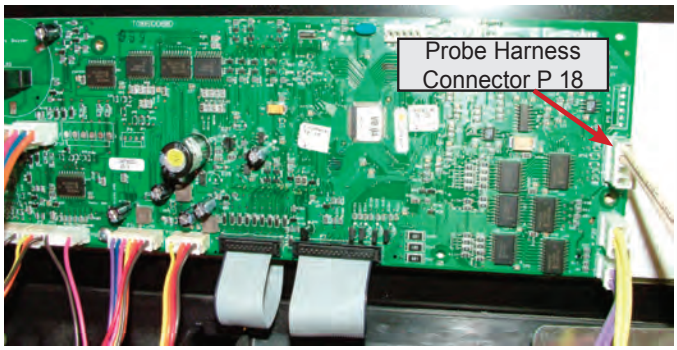

If the resistance is significantly higher or lower than that of the probe then the receptacle and wiring harness should be replaced. The receptacle and wiring harness are replaced as an assembly.
If the probe, receptacle and harness are good but the probe feature does not work the failure is in the E O C and it must be replaced.

Electrolux

INDUCTION HYBRID COOKTOP PRODUCT TRAINING SECTION

MODELS - EW30CC55GS, EW36CC55GS

30" Electric Induction Drop-In Cooktop

36" Electric Induction Drop-In Cooktop

Induction differs from all other cooking technologies by using a non-contact method of heating. A magnetic field transfers the electrical energy directly to the object to be heated. The cooking vessel becomes the element that cooks the food leaving the consumer with the same instant control as a gas cooktop. Induction cooktops are the fastest of all cooktop types to heat and cook food. They can be used for all types of cooking methods: boiling, frying, sautéing, simmering and melting butter or chocolate.

How does Induction work?

In **Figure 1**, it shows the element's electrical power. A coil that produces a high-frequency electromagnet field. In **Figure 2**, the field penetrates the metal of the ferrous (i.e. magnetic-material) cooking vessel and sets up a circulating electrical current, which generates heat. In **Figure 3**, the heat generated in the cooking vessel is transferred to the vessel's contents. Nothing outside the vessel is affected by the field. In **Figure 4**, it is showing that as soon as the vessel is removed from the element, or the element is turned off, heat generation will stop.

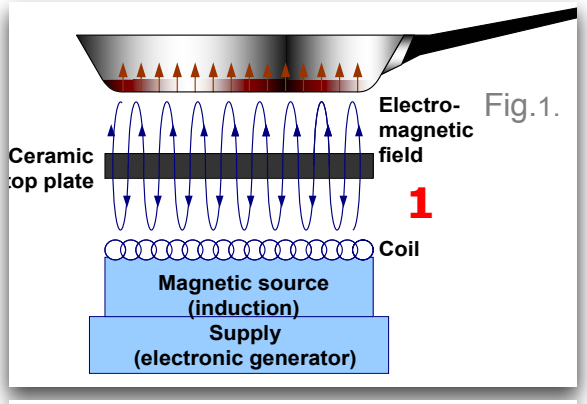

Fig.1.

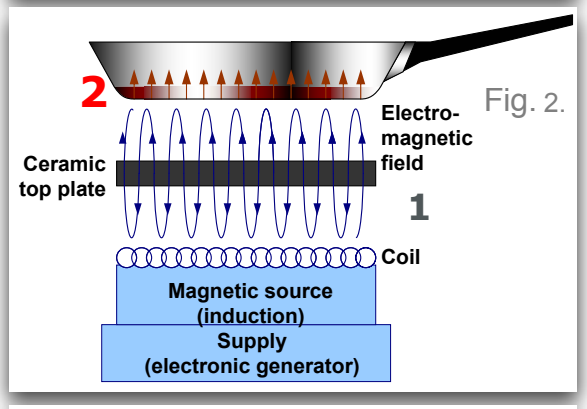

Fig. 2.

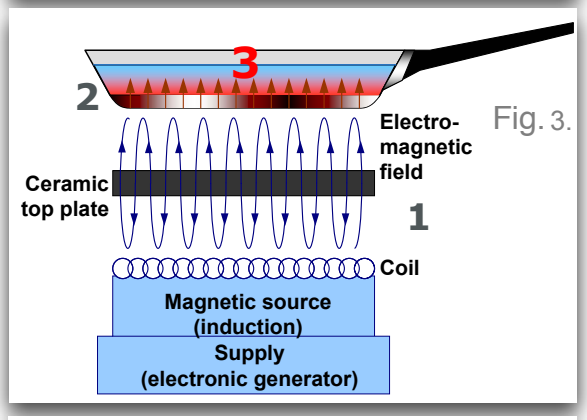

Fig. 3.

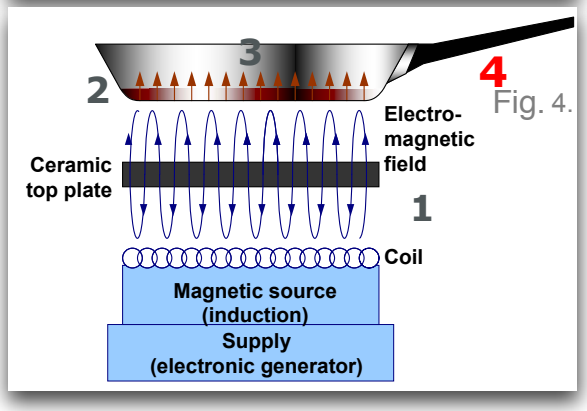

Fig. 4.

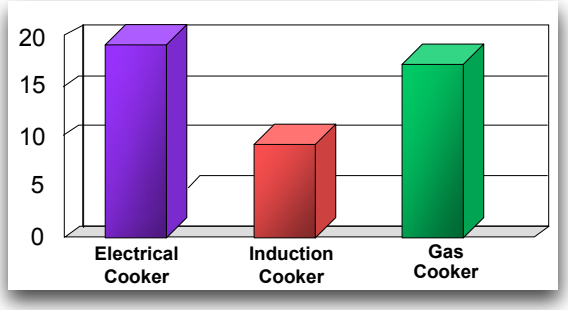

Figure 5: Rice Cooking Time

High Heating Efficiency

- The efficiency of the induction cooker is 85-95%.

- Cooking time (from full power start to boiling water) is only 8-10 minutes.

- Comparison with other types of cooking systems are listed in **Figure 5**.

By far, the most efficient cooking technology available - nearly twice as efficient as gas or other electrical technologies.

Tests have shown that induction hobs are 75% faster than vidroceramic hobs to heat 1.5 liters of water. Induction cookstops require 37% less power and offer better temperature control. When the hob is off, less energy is lost.

Since induction cooking works only when the pan is placed within the magnetic zone, energy is directed where it is needed. In comparison, gas delivers less than 50% and traditional electric less than 60%. Which is more than 90% of the energy cost that goes straight to the pan. Typical efficiencies according to the U.S. Department of Energy are Induction Cooktops at 84% and Gas Cooktops at 40%.

Safety
According to CEG Electric Glass Company,

"[Induction cooking] power savings of 40-70% are realistically achievable in comparison to conventional cooktops."

Induction is flameless which gives the benefits of a gas flame, without the dangers that associate with a open flame. The only heat occurs on the cookware, while the hob does not actually heat up limiting the risk of burns. There is no heat build-up and no carcinogenic fumes in the cooking environment.

Cooktop Care & Cleaning
Any metal marks caused by sliding pans on the cook top should be removed immediately after the cooktop has been cooled using the cooktop cleaning creme. Metal marks can become permanent if not removed prior to future use.

Do not slide anything metal or glass across the cooktop. **Do not** use your cooktop as a cutting board or work surface in the kitchen. **Do not** drop heavy or hard objects on the glass cooktop, because they may cause it to crack. **Do not** use a cooktop cleaner on a cooktop that is warm due to the transfer of heat from the cookware. The fumes can be hazardous to your health, and can chemically damage the ceramic-glass surface. Before cleaning the cooktop, be sure the controls are turned to OFF and the cooktop is COOL. Damage to the ceramic glass cooktop may occur if you use an abrasive type of scratch pad. Only use cleaning products that have been specifically designed for ceramic glass cooktop.

Induction Cookware - What To Use

- Cookware made with magnetic material that supports a magnetic field in it.

- Cookware specifically identified by the manufacturer for use with induction cooktops.

- Straight iron, e.g.
  - classic old cast-iron cookware.
  - modern vessels coated with enamel finishes.

- Induction-ready cookware that have layers in a base cladding "sandwich" made of stainless steel on the outsides and copper or aluminum in between.

If you're not sure, use a magnet (**Figure 6**) to test whether the cookware type will work. If a magnet sticks to the bottom of the cookware, the material type is correct for induction cooking.

Use quality cookware with heavier bottoms for better heat distribution allowing for more even cooking results. Use the correct size cookware. The pan size should match the amount of food being prepared and the pan bottom must fully cover the inner ring of the cooking zone.

Induction Cookware - What NOT To Use

Do not use materials like aluminum, copper, and Pyrex.

Do not use stainless steel cookware which is not readily magnetized.

Do not use any item of cookware that is not cast-iron and does not **explicitly** says "suitable for induction" in its description.

Tear Down - Cooling Fan & Thermostats

Figure 7

To access the cooling fan, start by removing the 8 screws that hold the service panel into place (**Figure 7**). Unplug the 2 wires from the cooling fan (**A B Figure 8**). Remove the 3 screws holding the cooling fan to the back panel (**123 Figure 8**). The white wire (**A**) is on the lower terminal and the black wire (**B**) is on the exterior terminal for low speed operation.

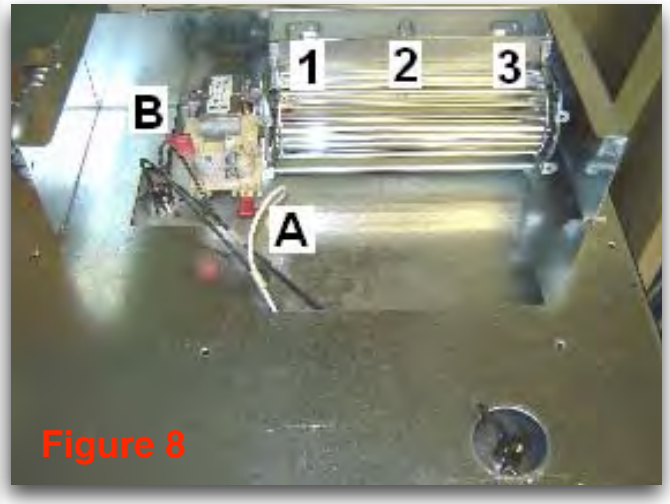

Figure 8

To remove the Safety Thermostats, take out the 2 screws that hold each of the 2 safety thermostats (**Figure 9**).


Figure 9

Start by removing the 3 screws that hold each of the left and right hand side trims (**Figure 10**). Total of 6 screws. Next remove the 9 screws from all around the cooktop (**Figure 11**). There are 6 spacers that absolutely need to be installed in order for the cooktop to have proper air circulation all around it.

Figure 11

Gently lift the cooktop from the back at roughly 90 degrees leaving the front portion as low as possible (**Figure 12**).
IMPORTANT: Stop at this point and refer to the next step.
Locate and remove the communication wire (**Figure 13**)from the inner part of the glass cooktop control. Then remove and gently put the cooktop aside in order to prevent any damage on it or to the customer's kitchen.


Figure 12

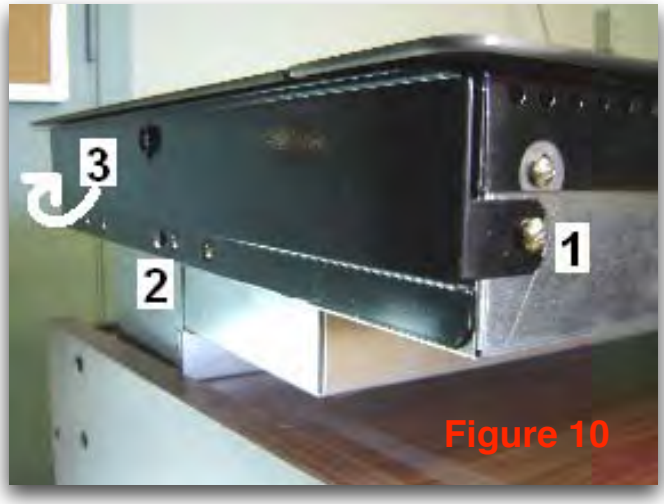

Figure 10


Figure 13

Surface Element Controls


Figure 14

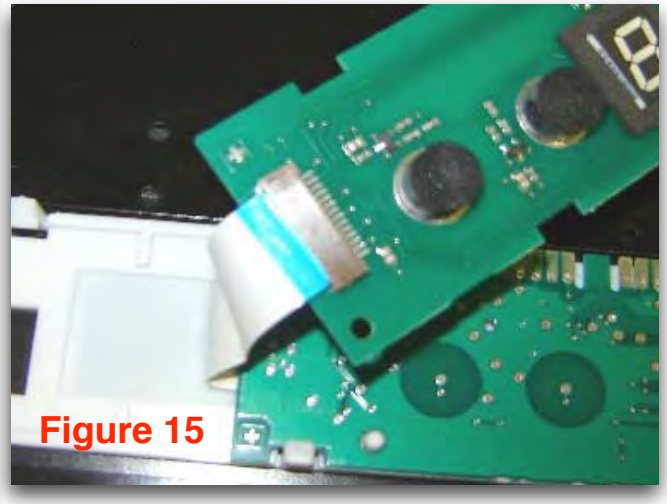
Figure 15

The left and right hand side controls are each held to the glass top (**Figure 14**) by 11 plastic clip retainers (**circles**) and one alignment pin (**arrow**).

The 2 controls are joined by a flex connection (**Figure 15**). The blue side of the flex connector goes under the control facing the glass cooktop. The metallic side faces the control.

Radiant Elements

Refer to the earlier steps for removing the cooktop. After the cooktop has been removed, there are 2 screws and 2 springs that push the radiant element up towards the cooktop (**Figure 16**). To remove, push down on the element, align the screw and hold and pull it away from the hole (both sides).

Upon replacing a radiant element, make sure to remove and install the springs and screws diagonally across (**Figure 17**).

Locate where the induction element wires go through the insulation, pull the insulation up, unplug the blue wire (**A**) and unscrew the 2 power lines (**1 2**)(**Figure 18**). Upon installing an induction element back, realign it with its anchorage pins (**Figure 19**).

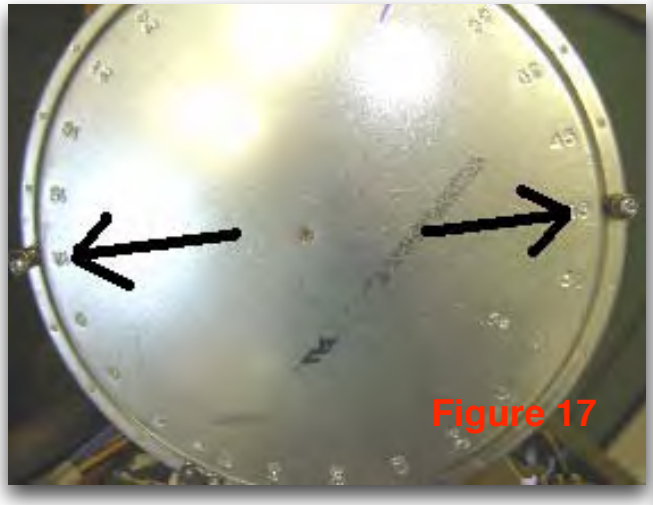
Figure 17

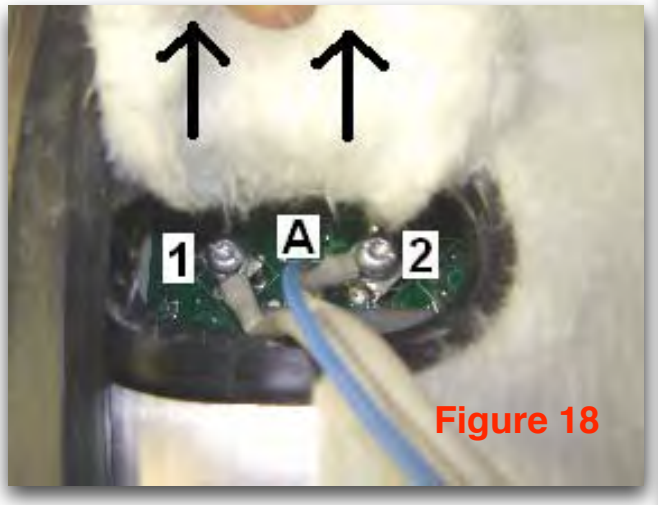

Figure 18

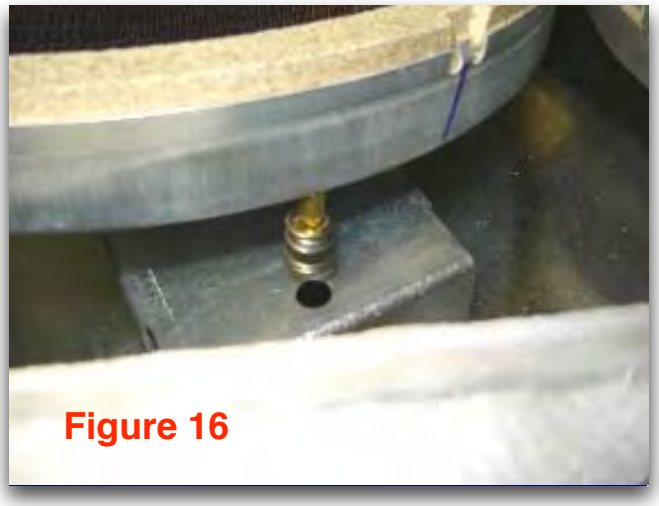
Figure 16

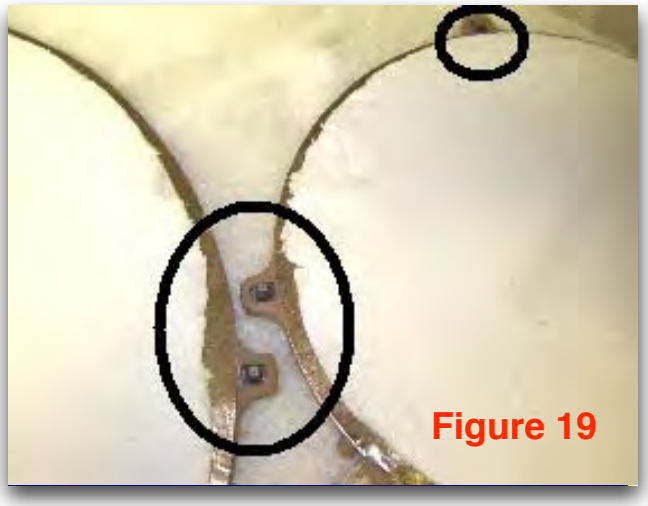
Figure 19

Radiant Element Relay Board


Figure 20

After removing the cooktop and both induction elements, pull the first layer of insulation up and away from the relay board (**Figure 20**). Remove the one screw that holds the metal separator in place (**Figure 21**). Remove the nut that holds the ground wire to this metal separator (**Figure 22**). Gently remove this metal separator away making sure that the black wire quick connector slides through the round opening (**Figure 23**). Remove the 5 quick connections (1-5) and press on the 4 plastic retainers (circles) in order to replace the relay board (**Figure 24**).

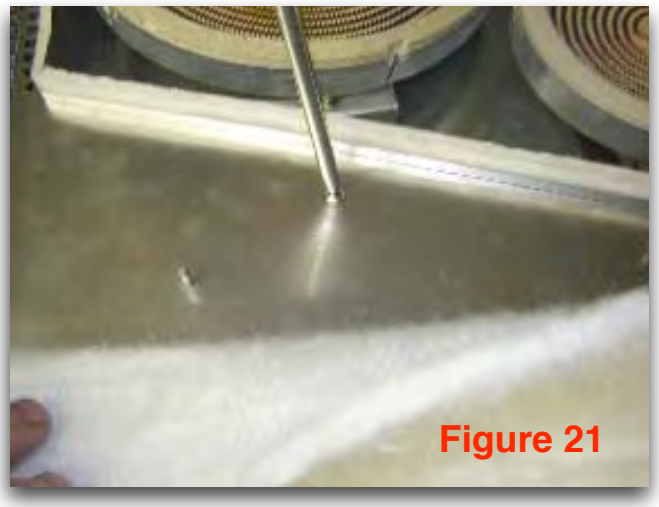
Figure 21


Figure 23


Figure 22

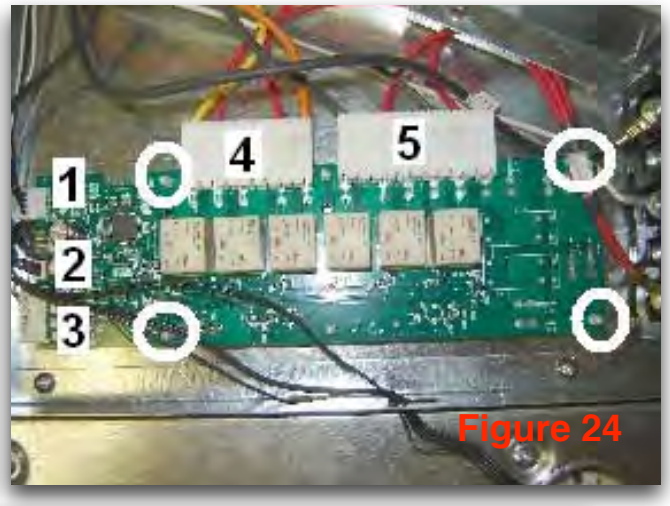

Figure 24

After removing the glass cooktop, the induction elements, the inner metal separator, and the second layer of insulation (all of these are explained in earlier steps). Remove the one black wire quick connection. It is located through the hole on top of the induction housing assembly (**Figure 25**).

After having unplugged the black wire quick connection, pass it through the opening towards the radiant relay board side (**Figure 26**).

Then remove the 10 screws that hold the induction housing assembly cover (**Figure 27**).

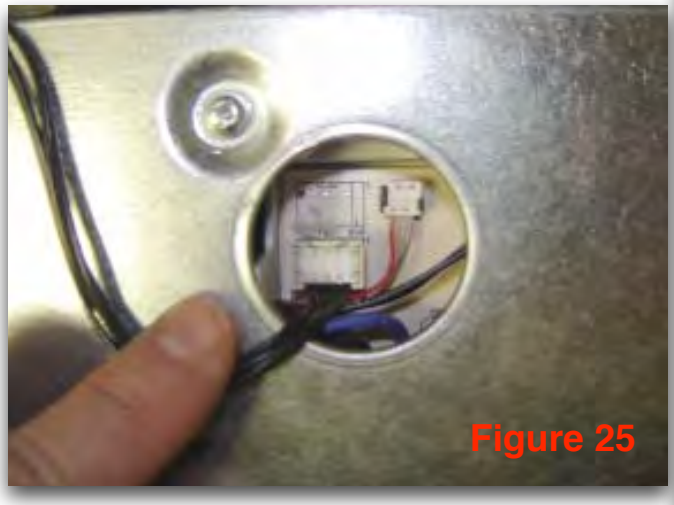
Figure 25

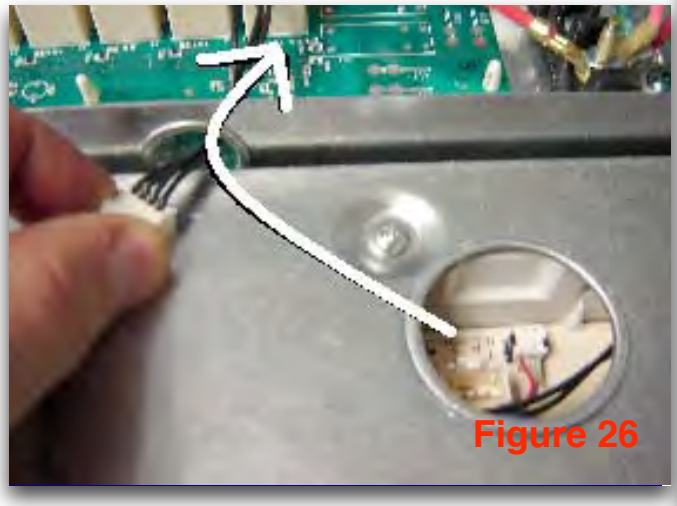
Figure 26

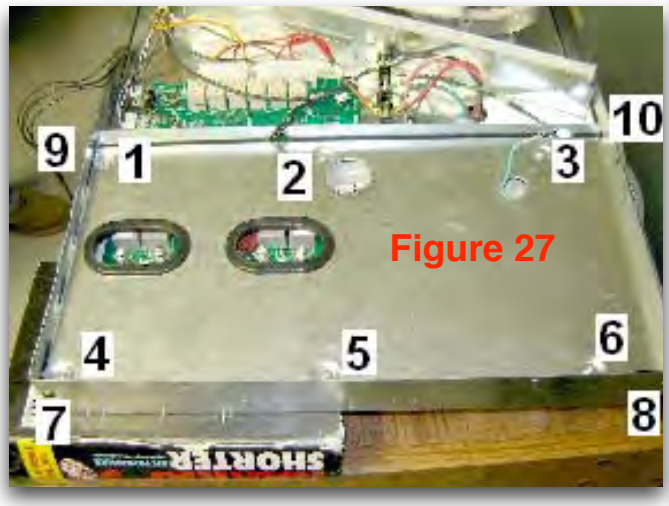

Figure 27

Induction Housing Assembly


Figure 28

Gently lift the induction cover up and away (**Figure 28**). At this point, the housing assembly will be free; remove the 4 wires and the housing can then be replaced (**Figure 29**).

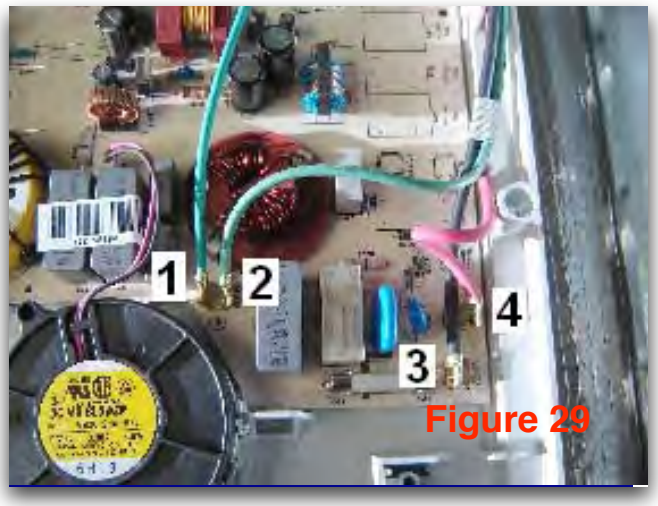

Figure 29

Housing Assembly Components (**Figure 30**)

1 - Complete Housing Assembly

2 - Generator Board

3 - Filter Board

4 - Cooling Fan

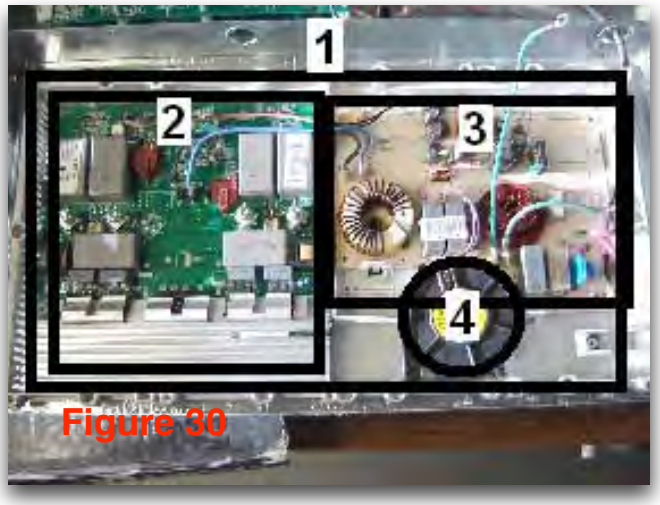

Figure 30

SERVICE DATA SHEET 318200260 (0708) Rev. A

Electric Induction/Radiant Cooktop with Electronic Control (30"/36")

NOTICE

This service data sheet is intended for use by persons having electrical and mechanical training and a level of knowledge of these subjects generally considered acceptable in the appliance repair trade. **The manufacturer cannot be responsible, nor assume any liability, for injury or damage of any kind arising from the use of this data sheet.**

SAFE SERVICING PRACTICES

To avoid the possibility of personal injury and/or property damage, it is important that safe servicing practices be observed. The following are some, but not all, examples of safe practices.

1. Do not attempt a product repair if you have any doubts as to your ability to complete it in a safe and satisfactory manner.

2. Before servicing or moving an appliance, remove power cord from electric outlet, trip circuit breaker to Off, or remove fuse.

3. Never interfere with the proper installation of any safety device.

4. USE ONLY REPLACEMENT PARTS SPECIFIED FOR THIS APPLIANCE. SUBSTITUTIONS MAY DEFEAT COMPLIANCE WITH SAFETY STANDARDS SET FOR HOME APPLIANCES.

5. GROUNDING: The standard color coding for safety ground wires is GREEN OR GREEN WITH YELLOW STRIPES. Ground leads are not to be used as current carrying conductors. IT IS EXTREMELY IMPORTANT THAT THE SERVICE TECHNICIAN REESTABLISH ALL SAFETY GROUNDS PRIOR TO COMPLETION OF SERVICE. FAILURE TO DO SO WILL CREATE A POTENTIAL HAZARD.

6. Prior to returning the product to service, ensure that:
   - All electric connections are correct and secure.
   - All electrical leads are properly dressed and secured away from sharp edges, high-temperature components, and moving parts.
   - All uninsulated electrical terminals, connectors, heaters, etc. are adequately spaced away from all metal parts and panels.
   - All safety grounds (both internal and external) are correctly and securely reassembled.
   - All panels are properly and securely reassembled.

INDUCTION / RADIANT COOKTOP

The Cooktop is provided with 2 induction burners and 2 (for 30" model) or 3 (for 36" model) radiant burners. The User Interface Boards are designed to command/react the Relay Board that controls the radiant elements and the Induction Module that controls the induction elements.

USER INTERFACE BOARDS (UIB)

The UIB includes three types of boards which could be connected in the following configurations:
- Left Timer Control & Right Time Control for 30" model.
- Left Timer Control & Center Timer Control & Right Timer Control for 36" model.

LEFT TIMER CONTROL

30" Model:

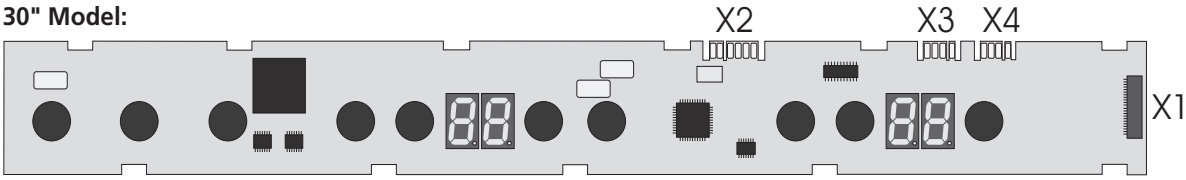

36" Model:

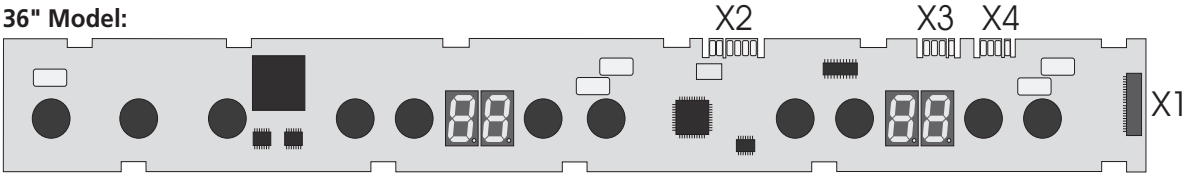

Left Timer Control Legend:

X1. Flex connection to Right Timer Control (30" Model) or to Center Timer Control (36" Model)

X2. Micro Programming header (not used)

X3/X4. Communication with Relay Board and Induction Module (could be used either X3 or X4).

CENTER TIMER CONTROL (36" MODEL ONLY)

Center Timer Control Legend:

X1. Flex connection to Left Timer Control.

X2. Flex connection to Right Timer Control.

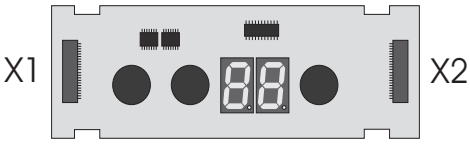

RIGHT TIMER CONTROL

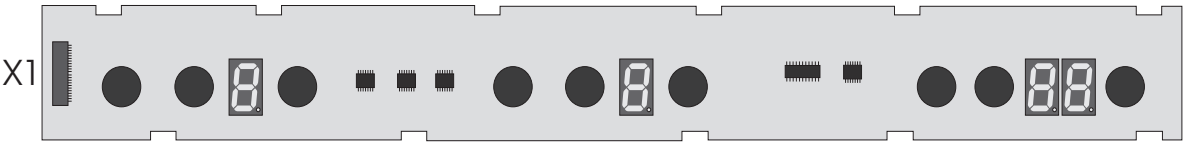

Right Timer Control Legend:

X1. Flex connection to Left Timer Control (30" Model) or to Center Timer Control (36" Model)

RELAY BOARD

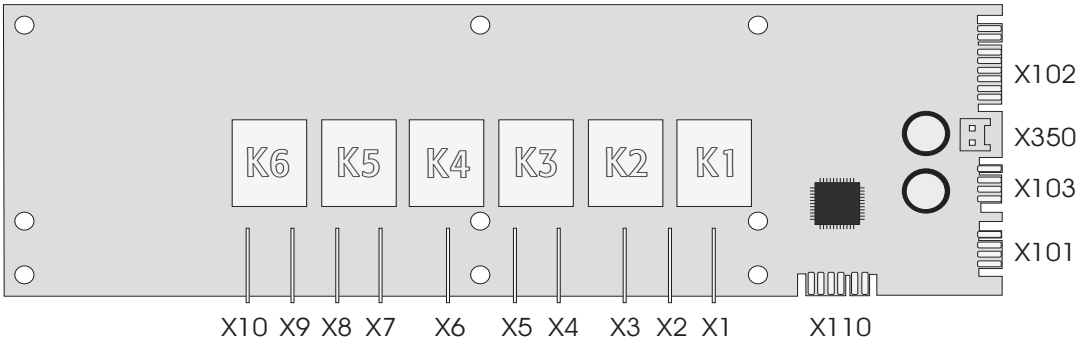

Relay Board Legend:

X1. Left Rear Element (inner 36" model)
X2. L2 Line Voltage Input
X3. Left Rear Element Outer (only 36" model)
X4. L2 Line Voltage Input
X5. Left Front Inner Element
X6. Left Front Outer Element
X7. L2 Line Voltage Input
X8. Center Rear Element (only 36" model)
X9. Fan
X10. L2 Line Voltage Input
X101/103. Communication with UIB and Induction Module (could be either X101 and X103)
X102. Surface Element Hot Signal Inputs
X110. Micro Programming header (not used)
X350. Thermostats Signal Inputs
K1. Relay for Left Rear Element (inner on 36" model)
K2. Relay for Left Rear Outer Element (36" only)
K3. Relay for Left Front Inner Element
K4. Relay for Left Front Outer Element
K5. Relay for Center Rear Element (36" only)
K6. Relay for Fan

INDUCTION MODULE

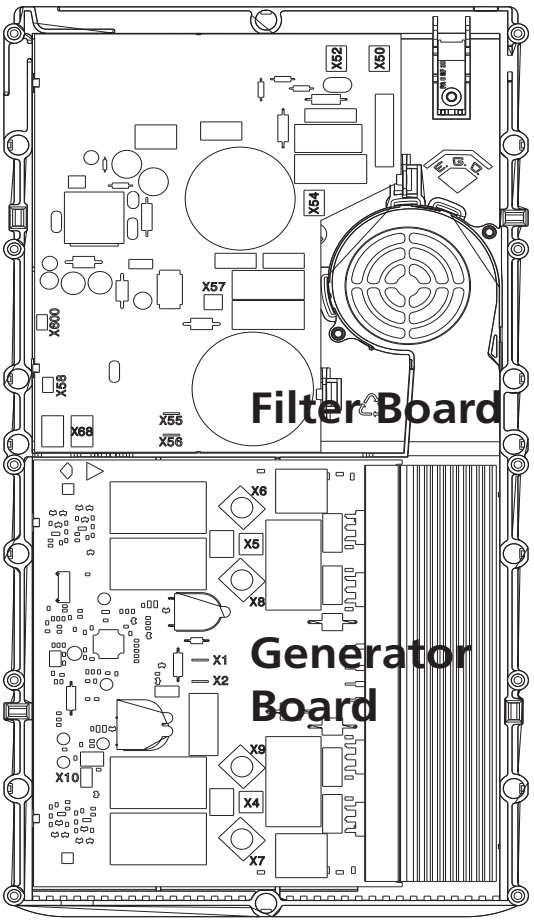

Induction Module Legend:

X5/X6X8. Right Front Element
X4/X7/X9. Right Rear Element
X50. L1 Line Voltage Input
X52. L2 Line Voltage Input
X54. Ground Line Voltage Input
X68. Communication with UIB and Relay Board

NOTES

The UIB, Relay Board and Induction Module are not on field repairable.

The following sub-assemblies of the Cooktop can be replaced:
- UIB: Left Timer Control, Center Timer Control and Right Timer Control.
- Relay Board
- Induction Module (Filter Board and Generator Board)
- Flex Cable
- Wiring Harnesses
- Radiant/Induction Elements
- Thermodisks
- The fuse on Induction Module

ELECTRICAL RATING

30" Model :

-	Left Rear	Radiant Single Element 6"	1200W
-	Left Front	Radiant Double Element 6"/9	1600W / 3000W
-	Right Rear	Induction 145mm	1200W / Power Boost 1500W
-	Right Front	Induction 260mm	2400W / Power Boost 3200W

36" Model :

-	Left Rear	Radiant Double Element 5"/7	750W / 1800W
-	Left Front	Radiant Double Element 6"/9"	1600W / 3000W
-	Center Rear	Radiant Single Element 6"	1200W
-	Right Rear	Induction 145mm	1200W / Power Boost 1500W
-	Right Front	Induction 260mm	2400W / Power Boost 3200W

FAULT CODES

Error #		Condition	Suggested Corrective Action
36"	30"		
2		(-) key sensor for cook place 3 (Center) [center board]	1) Test flex cable between Left board et center board. 2) Change center board 3) Change left board
3		(+) key sensor for cook place 3 (Center) [center board]	1) Test flex cable between Left board et center board. 2) Change center board 3) Change left board
4	4	(+) key sensor for timer [right board]	1) Test flex cable between boards. 2) Change right board 3) Change center board(on 36" only) 4) Change left board
5	5	(Warm) key sensor for Keep Warm [left board]	1) Change left board
6	6	(-) key sensor for cook place 2 (right position) [left board]	1) Change left board
7	7	(-) key sensor for timer [right board]	1) Test flex cable between boards. 2) Change right board 3) Change center board(on 36" only) 4) Change left board
8		(Zone Pwr) key sensor for cook place 3 (Center) [center board]	1) Test flex cable between Left board et center board. 2) Change center board 3) Change left board
10	10	(Zone Pwr) key sensor for cook place 4 (left position) [right board]	1) Test flex cable between boards. 2) Change right board 3) Change center board(on 36" only) 4) Change left board
11	11	(-) key sensor for cook place 4 (left position) [right board]	1) Test flex cable between boards. 2) Change right board 3) Change center board(on 36" only) 4) Change left board
12	12	(+) key sensor for cook place 5 (right position) [right board]	1) Test flex cable between boards. 2) Change right board 3) Change center board(on 36" only) 4) Change left board
13	13	(Zone Pwr) key sensor for cook place 1 (left position) [left board]	1) Change left board
14	14	(+) key sensor for cook place 4 (left position) [right board]	1) Test flex cable between boards. 2) Change right board 3) Change center board(on 36" only) 4) Change left board
15	15	(-) key sensor for cook place 5 (right position) [right board]	1) Test flex cable between boards. 2) Change right board 3) Change center board(on 36" only) 4) Change left board
16	16	(on/off) timer [right board]	1) Test flex cable between boards. 2) Change right board 3) Change center board(on 36" only) 4) Change left board
17	17	(Lock) key sensor for Controls Lock	1) Change left board
18	18	(size) key sensor for cook place 1 (left position) [left board]	1) Change left board
19	19	(Zone Pwr) key sensor for cook place 5 (right position) [right board]	1) Test flex cable between boards. 2) Change right board 3) Change center board(on 36" only) 4) Change left board
20	20	(+) key sensor for cook place 2 (right position) [left board]	1) Change left board
21	21	(Zone Pwr) key sensor for cook place 2 (right position) [left board]	1) Change left board
22	22	(+) key sensor for cook place 1 (left position) [left board]	1) Change left board
23	23	(-) key sensor for cook place 1 (left position) [left board]	1) Change left board
24	24	(Main On/Off) key sensor for Main Power	1) Change left board
25		(size) key sensor for cook place 2 (right position) [left board]	1) Change left board
32	32	12V on the service section to low (relay board)	1) Check harnes between Induction Module - Relay Board - Control Board 2) Change the Relay Board
36	36	LIN error communication Touch control filter incorrectly	1) Replace the control board(left board)
37	37	Heat sink temperature sensor break on Control Board (left board)	1) Verify cooktop ventilation is correct(airway & fan) 2) Verify if the cooktop is correct assembled. 3) Change the Control Roard(Left Board)
39	39	Touch: incorrect configuration	Press and hold Warm key then press Right Front Zone Power key and then press Left Front(30") or Left Rear(36") Zone Power key(Warm always pressed)
40	40	Touch: Lin error - no communications, shorted bus	1) Check harnes between Induction Module - Relay Board - Control Board 2) Change the Control Board(left board), 3) Change the Relay Board 4) Replace the Induction Module
41	41	Relay check not ok	Change Relay Board

FAULT CODES (CONTINUED)

51	51	Element temperature sensor break, cook place 1 (Front Left)	Check all safety thermodisks
52	52	Element temperature sensor break, cook place 2 (Rear Left)	
53	53	Element temperature sensor break, cook place 3 (CENTER)	
54	54	Element temperature sensor break, cook place 4 (Rear Right)	1) Verify element temperature sensor is correctly connected to the induction housing. 2) Replace element if the temperature sensor resistor value is not approximatively 1000 ohms at room temperature. 3) Replace the Induction Module
55	55	Element temperature sensor break, cook place 5 (Front Right)	
60	60	Touch: general hardware error, keys	1) Replace the control board(left board)
61	61	Heat sink temperature sensor break on Relay Board	1) Verify cooktop ventilation is correct(airway & fan) 2) Verify if the cooktop is correct assembled. 3) Change the Relay Roard
62	62		
63	63		
64	64	Element temperature sensor too hot cook place 4 (Rear Right)	1) Verify cooktop ventilation is correct(airway & fan). 2) Verify element temperature sensor is correctly connected to the induction module. 3) Replace element if the temperature sensor resistor value is not approximatively 1000 ohms at room temperature. 4) Replace the Induction module.
65	65	Element temperature sensor too hot cook place 5 (Front Right)	
80	80	Flash/Rom check total od. Fuses/Lockbits wrongly EEPROM data	1) Replace the control board(left board)
83	83	Shift register issue on Right Touch Board	1) Verify the flex cable between boards 2) Replace the Right Touch Board 3) Replace the Middle Touch board(36" only) 4) Replace the Control Board(Left Board)
88		Shift register issue on Middle Touch Board	1) Verify the flex cable between boards 2) Replace the Middle Touch board 3) Replace the Control Board(Left Board)
90	90	Wrong connection secondary voltage of the power pack too high (primary > 300V)	1) Verify AC input voltage at the cooktop input. 2) Verify AC main input cables & screws 3) Replace the Filter Board on the Induction Module.
91	91	Synchronous impulse (net zero crossover) - touch control must request a power level to detect this issue	1) Test cables & connections on the Induction Module. 2) Replace the Generator Board on the Induction Module
92	92	12V on the service section to low (Induction Module)	1) Test cables & connections on the Induction Module. 2) Replace the Generator Board on the Induction Module 3) Replace the Filter Board on the Induction module.
93	93	5V overcurrent on the switched 5V on the service section	
94	94	Sub LIN error communication filter service section incorrectly - This is an error detected between the filter board and the power boards.	1) Verify cable between filter board X58 and generator board X10. 2) Verify the thermal limiter resistor value(installed in the heat sink) to be approximatively 0 ohm. 3) Replace the Filter Board on the Induction Module. 4) Replace the Generator Board on the Induction Module.
95	95	Mains voltage signal invalidly phase 1, undervoltage or optocoupler defective - This is an indication that one phase is wrong. The other phase will still work.	1) Verify AC input voltage at the cooktop input. 2) Verify AC main input cables & screws 3) Verify the fuse resistance to be approximatively 0 ohm. 4) Replace the Filter Board on the Induction Module.
96	96	LIN error communication Touch control filter incorrectly	1) Replace the control board(left board) 2) Replace the Filter Board on the Induction Module 3) Replace the Generator Board on the Induction Module.
97	97	Heat sink temperature sensor break	1) Replace the Generator Board on the Induction Module.
99	99	Furture Induction Module Errors	

Schematic

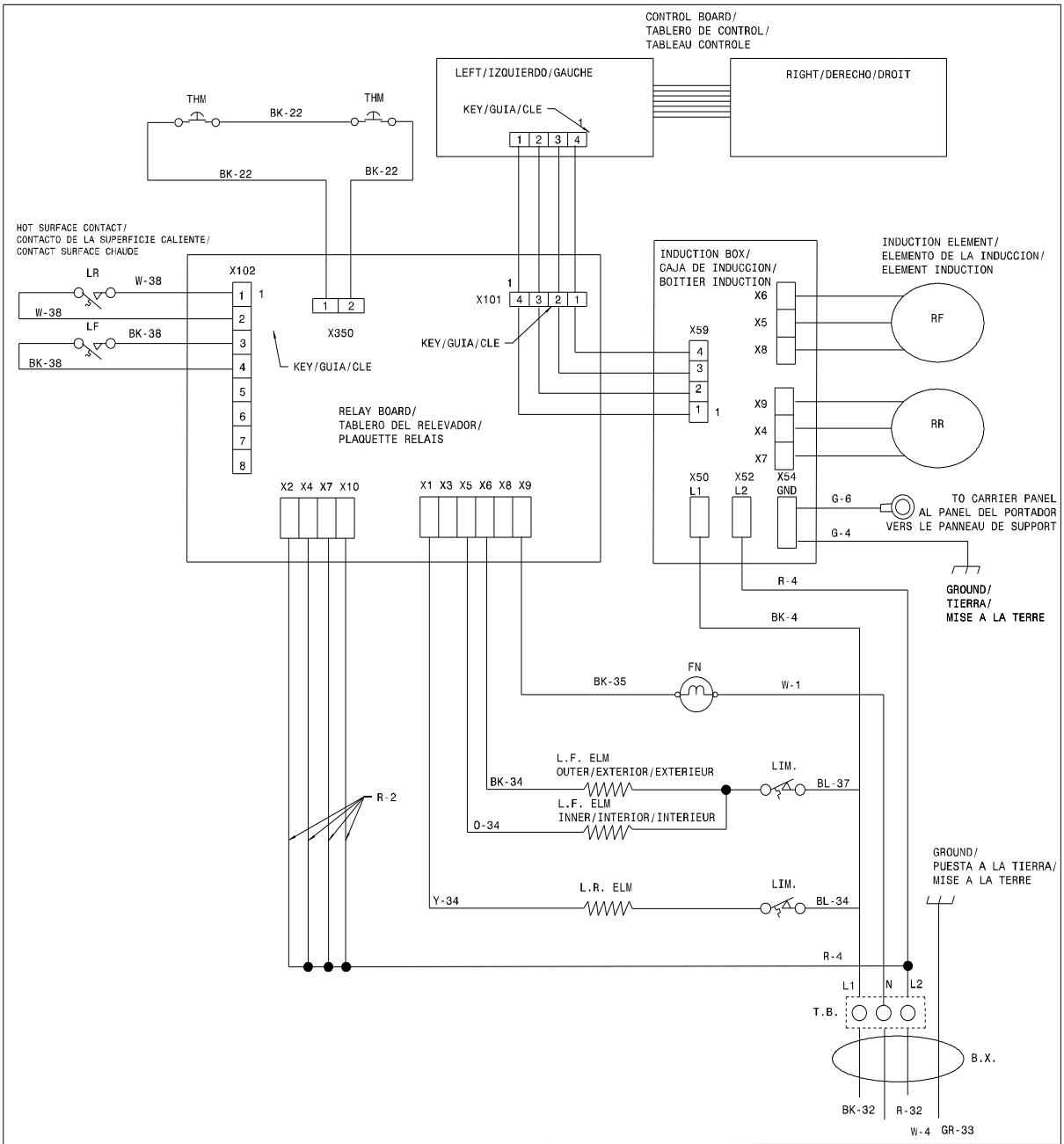

LEGEND/LEYENDA/LEGENDE

C.R.- CENTER REAR/POSTERIOR CENTRAL/ARRIERE CENTRE
R.F. - RIGHT FRONT/FRENTE DERECHO/AVANT DROIT
R.R. - RIGHT REAR/POSTERIOR DERECHO/ARRIERE DROIT
L.F. - LEFT FRONT/FRENTE IZQUIERDO/AVANT GAUCHE
L.R. - LEFT REAR/POSTERIOR IZQUIERDO/ARRIERE GAUCHE
LIM.-ELEMENT LIMITOR/ELEMENTO LIMITADOR/LIMITEUR ELEMENT
ELM.-ELEMENT/ELEMENTO/ELEMENT
H.S.-HOT SURFACE/SUPERFICIE CALIENTE/SURFACE CHAUDE
T.B.-TERMINAL BLOCK/BLOQUE DE TERMINALES/BLOC DE CONNECTION
THM.-THERMAL CIRCUIT BREAKER/INTERRUPTOR TERMICO/PROTECTEUR THERMIQUE
FN-FAN/VENTILADOR/VENTILATEUR
B.X.-ARMORED CABLE/TUBO FLEXIBLE/CABLE ARME

COLOR CODE/CODIGOS DE COLOR/CODE DE COULEUR

G.-GREEN/VERDE/VERT
W.-WHITE/BLANCO/BLANC
R.-RED/ROJO/ROUGE
O.-ORANGE/NARANJA/ORANGE
Y.-YELLOW/AMARILLO/JAUNE
BR.-BROWN/CAFE/BRUN
BL.-BLUE/AZUL/BLEU
BK.-BLACK/NEGRO/NOIR
PK.-PINK/ROSA/ROSA/
T.-TAN/CAFE CLARO/BEIGE

WIRE ALAMBRE FIL	GAUGE MEDIDA CALIBRE	TEMP.°C	CSA	UL
1	18	125	CL1251	3173
2	16	125	CL1251	3173
3	14	125	CL1251	3173
4	12	125	CL1251	3173
5	18	150	EXL-150	3321
6	16	150	EXL-150	3321
7	14	150	EXL-150	3321
8	12	150	EXL-150	3321
9	10	150	EXL-150	3321
10	18	200	SEW-1	3122
11	16	200	SEW-1	3122
21	22	125	CL-1252	3266
22	22	150		10109
32	8	125	CL-1251	3173
33	10	125	CL-1251	3173
34	16	200		3512
35	18	200		3512

LIMITER/LIMITADOR/LIMITEUR
E.G.O./A.K.O.

ELEMENT LIMITOR/
ELEMENTO LIMITADOR/
LIMITEUR ELEMENT

HOT SURFACE CONTACT/
CONTACTO DE LA SUPERFICIE CALIENTE/
CONTACT SURFACE CHAUDE

CAUTION: DISCONNECT POWER BEFORE SERVICING UNIT.
ATENCION: CORTAR LA CORRIENTE ANTES DE REALIZAR EL MANTENIMIENTO DEL ELECTRODOMESTICO.
ATTENTION: COUPEZ L`ALIMENTATION AVANT D`EFFECTUER LA REPARATION.

318046830 REV:D

Electrolux

BUILT-IN WALL OVEN PRODUCT TRAINING SECTION

MODELS - EW30EW65G , EI30EW55G

Product Features - Single Wall Oven

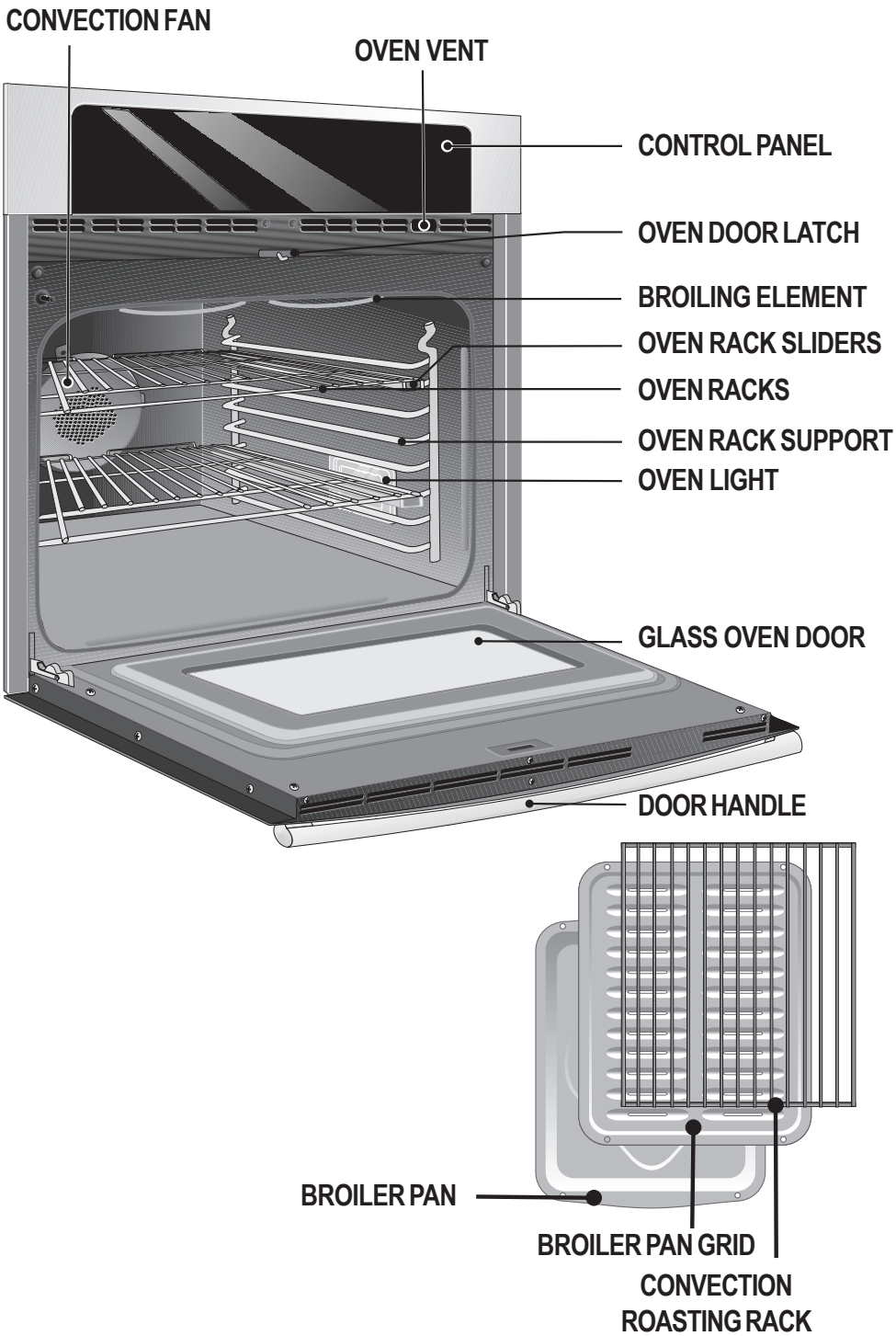


CONVECTION FAN
OVEN VENT
CONTROL PANEL
OVEN DOOR LATCH
BROILING ELEMENT
OVEN RACK SLIDERS
OVEN RACKS
OVEN RACK SUPPORT
OVEN LIGHT
GLASS OVEN DOOR
DOOR HANDLE
BROILER PAN
BROILER PAN GRID
CONVECTION
ROASTING RACK

Wiring Diagram for Single Wall Oven

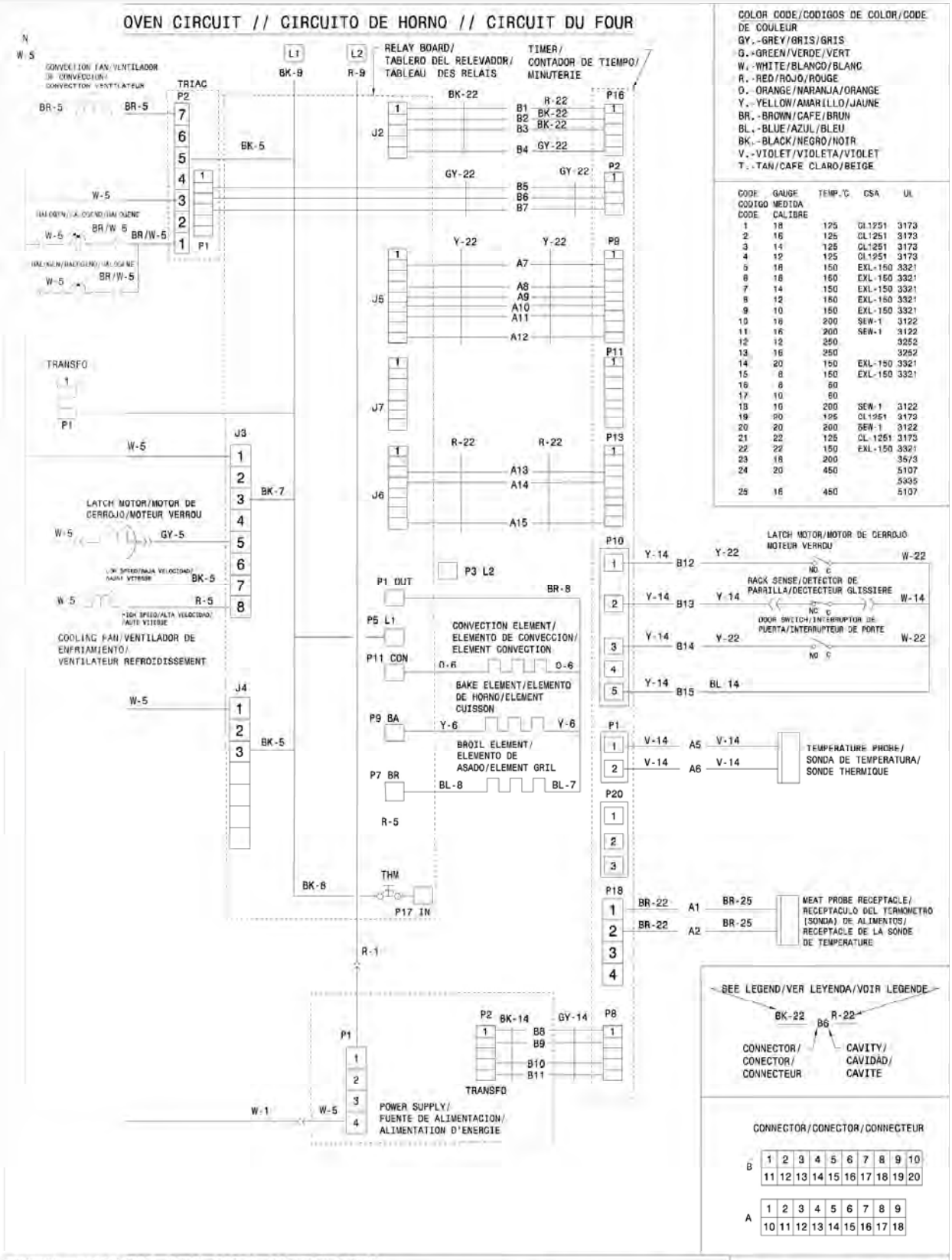

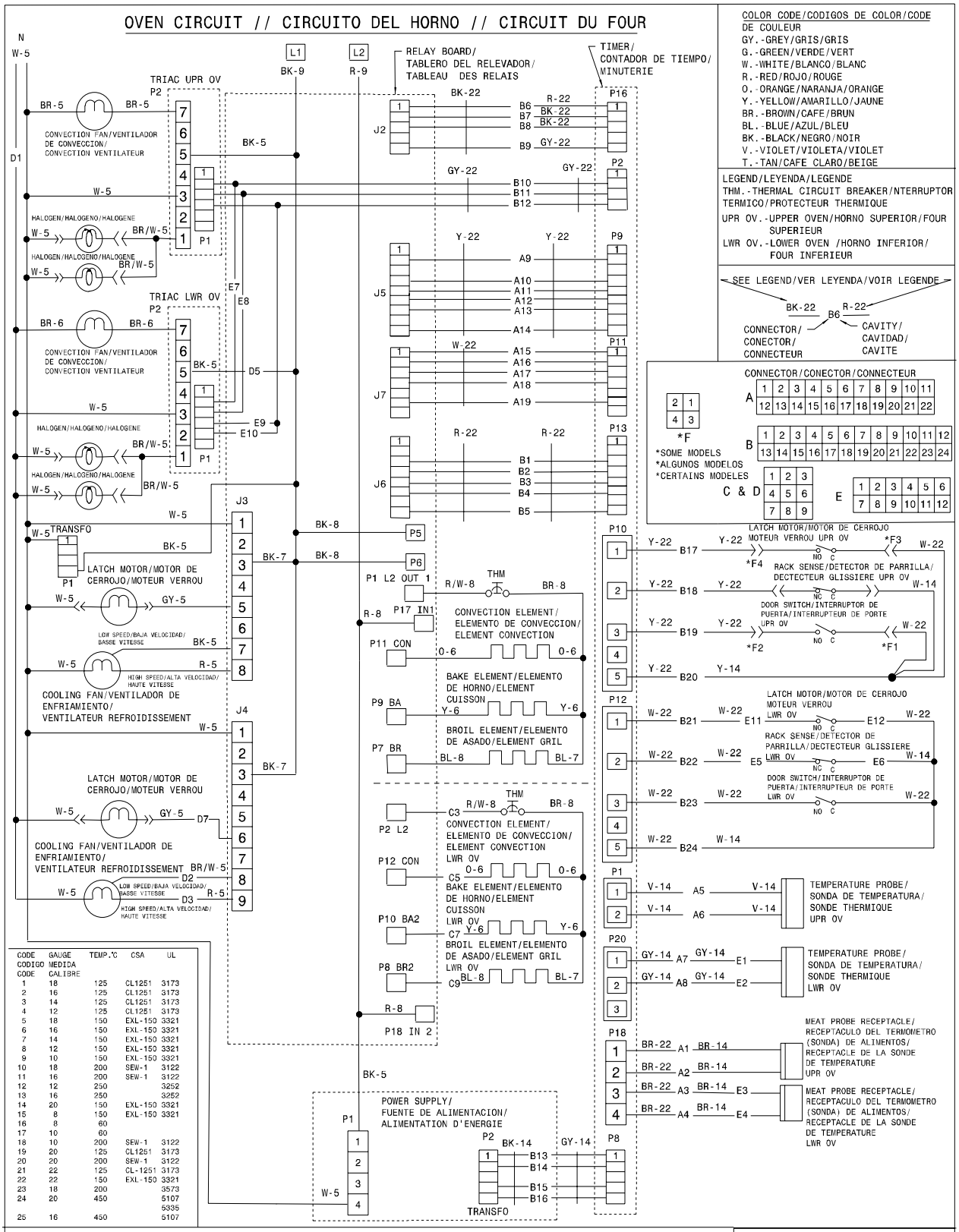

CAUTION: DISCONNECT POWER BEFORE SERVICING UNIT.
ATENCION:CORTAR LA CORIENTE ANTES DE REALIZAR EL MANTENIMIENTO DEL ELECTRODOMESTICO.
ATTENTION:COUPEZ L`ALIMENTATION AVANT D`EFFECTUER LA REPARATION.

318046124 REV:H

CONTROL PAD FUNCTIONS

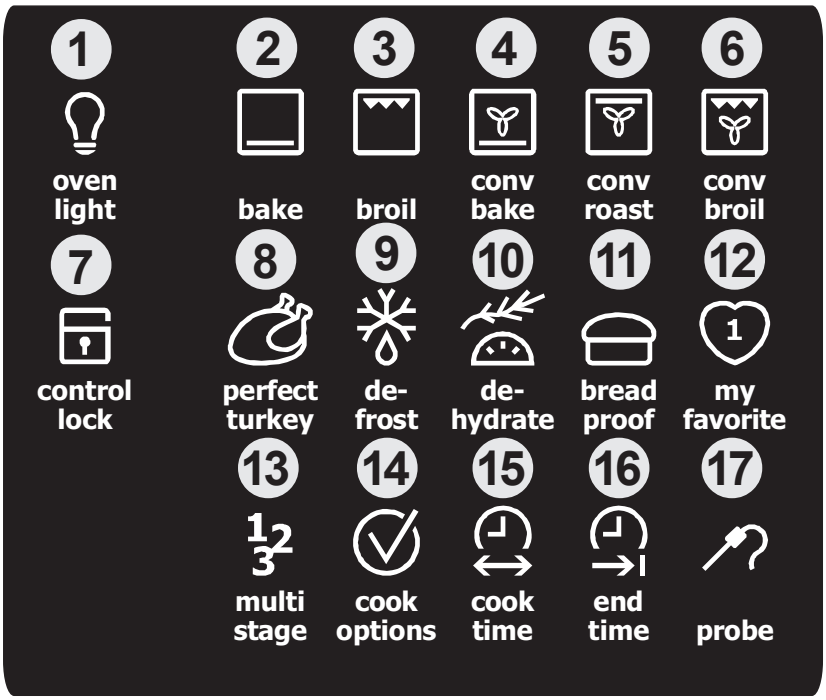

1. **Light Pad**- Used to turn the oven light on and off.
2. **Bake Pad**- Used to enter the normal baking mode temperature.
3. **Broil Pad**- Used to select the variable broil mode.
4. **Convection Bake Pad**- Used to select the convection baking mode.
5. **Convection Roast Pad**- Used to select the convection roasting mode.
6. **Convection Broil Pad**- Used to select the convection broil mode.
7. **Control Lock Pad**- Used to disable all oven function.
8. **Perfect Turkey Pad**- Used to select the perfect turkey cooking mode.
9. **Defrost Pad**- Used to select the defrost mode.
10. **Dehydrate Pad**- Used to select the dehydrate mode.
11. **Bread Proof Pad**- Used to select the bread proof mode.
12. **My Favorite 1 Pad**- Used to save or recall the favorite 1 cooking mode.
13. **Multi Stage Pad**- Used to enter up to three subsequent modes.
14. **Cook Options Pad**- Used to light up the cooking options pads.
15. **Cook Time Pad**- Used to set a cooking duration time.
16. **End Time Pad**- Used to select the time at which the cooking will end.
17. **Probe Pad**- Used to activate the meat probe mode.

CONTROL PAD FUNCTIONS (CONTINUED)

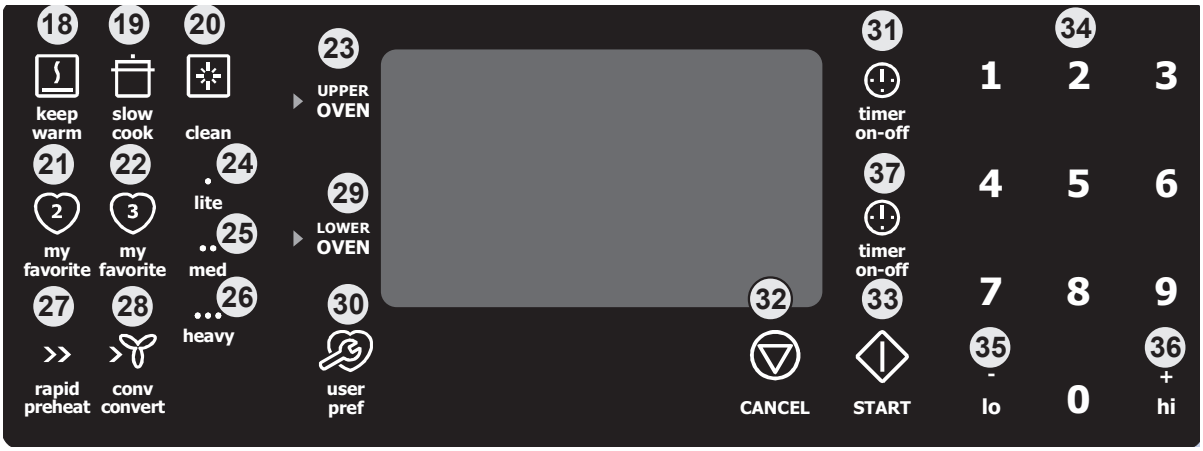

18 **Keep Warm Pad**- Used to select the keep warm mode.

19 **Slow Cook Pad**- Used to select the slow cook mode.

20 **Clean Pad**- Used to select the self-cleaning mode.

21 **My Favorite 2 Pad**- Used to save or recall the favorite 2 cooking mode.

22 **My Favorite 3 Pad**- Used to save or recall the favorite 3 cooking mode.

23 **Upper Oven Pad**- Used to activate the upper oven for cooking operation.

24 **Lite Pad**- Used to start a 2 hours self-clean cycle.

25 **Med Pad**- Used to start a 3 hours self-clean cycle.

26 **Heavy Pad**- Used to start a 4 hours self-clean cycle.

27 **Rapid Preheat Pad**- Used to preheat the oven to the desired temperature.

28 **Conv. Convert Pad**- Used to convert a standard temperature to a convection temperature.

29 **Lower Oven Pad**- Used to activate the lower oven for cooking operation. * This pad is only available on the double wall oven.

30 **User Preference Pad**- Used to bring the user preference menu in the display.

31 **Timer Pad**- Used to set or cancel the minute timer. The minute timer does not start or stop cooking.

32 **Cancel Pad**- Used to cancel any function previously entered except the time of day and minute timer. Push **Cancel pad** to stop cooking.

33 **Start Pad**- Used to start all oven functions.

34 **0 Thru 9 Number Pads**- Used to enter temperature and times.

35 **- lo Pad**- Used to lower the temperature and times.

36 **+ hi Pad**- Used to raise the temperature and times.

37 **Timer Pad**- Used to set or cancel the minute timer. The minute timer does not start or stop cooking. This timer is only available on the double wall oven.

SETTING CLOCK AT POWER UP

When the unit is first plugged in, or when the power supply to the range has been interrupted, the timer in the display will flash with **"12:00"**. The clock cannot be set when the oven is on. If an invalid time of day is entered, the control will triple beep to prompt you to re-enter a valid time of day.

To set the clock (example for 1:30):

1. Press 1 3 0 pads to set the time of day to 1:30. The pads + hi or - lo can also be pressed to raise or lower the actual time displayed.
2. Press **START** to accept the changes or **CANCEL** to start with a time of 12:00.

CONTROL PANEL DISPLAY MODES

Sleep Mode:

Your control will remain in a sleep mode when not in use. Only the clock will display during this mode. You will need to wake the control to begin any function.

Wake Mode:

To wake the control, touch within the display panel. After 2 minutes without activity the control will beep and go back into sleep mode.

To start a cooking feature you must select either the upper oven or the lower oven. User preferences will be available during this mode as well as timers, oven light and the control lock.

TEMPERATURE VISUAL DISPLAY

Your oven is equipped with a temperature visual display for each oven. When a cooking mode is set, the actual temperature will be shown in the display and will rise as the unit preheats. When the unit has reached its target temperature, a chime will sound to remind you to place the food in the oven. This feature will be active with some cooking modes; bake, convection bake, convection roast and perfect turkey. The cooking modes which does not feature the temperature visual display will be noted in their descriptions.
NOTE: The lowest temperature that can be displayed is 100°F.

OVEN LIGHT

Your appliance includes “theater” style oven lighting feature that gradually lights both the upper and lower oven interiors to full brightness. Each oven is equipped with 2 halogen lights. The oven lights will turn on automatically when the oven door is opened. The oven light may be turned on when the door is closed by using the oven light pad located on the control panel. The oven light key will toggle the lights in both ovens at the same time.

To toggle the Oven Lights ON and OFF:

1. Press **OVEN LIGHT** .

CONTROL LOCK

The Control Lock feature automatically locks the oven door and the control panel. The Control Lock is only allowed when the oven is turned OFF (not active). The Control Lock feature will lock both oven at the same time. DOOR LOCK will flash in the display for 20 seconds or until the door has finished locking. Once the door has been locked, DOOR LOCK will remain static. Do not attempt to open to oven door while DOOR LOCK is flashing.

To toggle the Control Lock ON and OFF:

1. Keep **CONTROL LOCK** pressed for 3 seconds.

SETTING THE KITCHEN TIMER

This unit is equipped with 2 Kitchen Timers which serves as extra timers in the kitchen that will beep when the set time has run out. It does not start or stop cooking. The Timer feature can be used during any of the other oven control functions and cooking modes.

To set the Timer (example for 5 minutes):

1. Press **TIMER** . **"00:00"** will appear in the display.
2. Press 5 pad to set the timer to 5 minutes. The pads + hi or - lo can also be pressed to raise or lower the actual time displayed.
3. Press again **TIMER** to accept and start the countdown.
4. When the set time has run out, "**00:00**" will be displayed and the **TIMER** pad will flash. The clock will sound a chime that will be repeated at regular intervals until the **TIMER** pad is pressed.

To cancel the Timer before the set time has run out:

Press **TIMER** . The display will return to the time of day.

BAKING

This mode is best used for your standard recipes. The hidden bake element is used to heat the air and maintain temperature. The temperature probe can be used in this cooking mode. The oven can be programmed to bake at any temperature from 170°F to 550°F with a default temperature of 350°F.

Baking Tips:

- Always preheat your oven before using the bake mode.
- During preheat, the 3 elements and the convection fan are used in cycle to quickly heat the oven.
- Use only one rack and center the pans as much as possible.
- If using two racks, place the oven racks in positions 2 and 6.
- Allow 2" to 4" (5,1 to 10,2cm) around the utensil(s) for proper air circulation.
- Be sure the pans do not touch each other, the door, sides or back of the oven.

If using multiple pans or racks, stagger as shown.

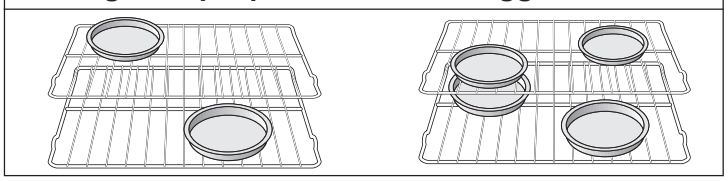

To set a Bake Temperature of 350°F:

1. Arrange interior oven racks.
2. Select oven by pressing either **UPPER OVEN** UPPER OVEN or **LOWER OVEN** LOWER OVEN.
3. Press **BAKE**.
4. Press **START**. The oven display shows **PRE-HEATING**.
5. Place food in the oven when the chime signals and temperature display shows that the oven has reached the set target temperature and the **PRE-HEATING** message disappear.
6. The Temperature Probe, Cook Time, Timer, End Time and Rapid Preheat features can be set to control your cooking time (read their sections for directions).
7. Remove food. Always use oven mitts when removing hot pans from the oven.
8. Press **CANCEL** to stop or cancel the Bake feature at any time.

To change to a Bake Temperature of 425°F:

1. Select the active oven by pressing either **UPPER OVEN** UPPER OVEN or **LOWER OVEN** LOWER OVEN.
2. Press the **HI** + hi or **LO** - lo pads to get to the desired temperature.
3. Press **START**.

Baking Problems

Refer to the Baking Problems Table in the Solutions to Common Problems section of this manual.

COOK TIME

Cook Time allows the oven to be set to cook for a set length of time and shut off automatically. The time remaining will always be shown in the timer section of the display. The oven will shut off and will beep when the countdown is finished. This feature can be used with Bake, Convection Bake, Convection Roast, Slow Cook, Keep Warm, Defrost, Bread Proof, Dehydrate and Perfect Turkey cooking modes. It can also be part of a Multi-Stage sequence.

To set a timed cooking *(example is a 450°F Bake for 30 minutes)*:

1. Select oven by pressing either **UPPER OVEN** UPPER OVEN or **LOWER OVEN** LOWER OVEN.
2. Press **BAKE**. The temperature numbers will blink in the display.
3. Enter temperature needed; 4 5 0.
4. Press **COOK OPTIONS** to bring up the cook options items.
5. Press **COOK TIME**.
6. Enter time needed; 3 0.
7. Press **START**. The oven will start heating. The cook time will start counting down for the set time.
8. Press **CANCEL** to stop the audible alarm or to cancel the cook time at anytime.

END TIME

End Time allows the oven to be set to shut off automatically at a set time of day. The oven control will calculate the remaining time by itself. The time remaining will always be shown in the timer section of the display. The oven will shut off and will beep when the countdown is finished. This feature can be used with Bake, Convection Bake, Convection Roast, Slow Cook, Keep Warm, Defrost, Dehydrate, Clean and Bread Proof cooking modes. This oven can be programmed with Cook Time and End Time to start and stop by itself at the right time.

To set a delayed timed cooking *(example is a 450°F Bake for 30 minutes which will end at 6:00PM)*:

1. Select oven by pressing either **UPPER OVEN** UPPER OVEN or **LOWER OVEN** LOWER OVEN.
2. Press **BAKE**. The temperature numbers will blink in the display.
3. Enter temperature needed; 4 5 0.
4. Press **COOK OPTIONS** to bring up the cook options items.
5. Press **COOK TIME**.
6. Enter time needed; 3 0.
7. Press **END TIME**.
8. Enter time of day needed; 6 0 0.
9. Press **START**. The time remaining will be shown in the display.
10. Press **CANCEL** to stop the audible alarm or to cancel the end time at anytime.

CAUTION Use caution with the **COOK TIME** or **END TIME** features. Use the automatic timer when cooking cured or frozen meats and most fruits and vegetables. Foods that can easily spoil such as milk, eggs, fish, meat or poultry, should be chilled in the refrigerator first. Even when chilled, they should not stand in the oven for more than 1 hour before cooking begins, and should be removed promptly when cooking is completed. Eating spoiled food can result in sickness from food poisoning.

BROILING

This mode is best for meats, fish and poultry up to 1” thick. Broiling is a method of cooking tender cuts of meat by direct heat under the broil element of the oven. The high heat cooks quickly and gives a rich, brown outer appearance. The temperature probe cannot be used with this mode. The oven can be programmed to broil at any temperature from 300°F to 550°F with a default temperature of 550°F.

Broiling Tips:

- For optimum browning, preheat the broil element for 2 minutes.
- Broil one side until the food is browned; turn and cook on the second side. Season and serve.
- Always pull the rack out to the "stop" position before turning or removing food.
- Always use the broiler pan and its grid when broiling. It allows the dripping grease to be kept away from the high heat of the broil element (see Figure 1).
- For best broiling results, broil with the oven door slightly open.
- **DO NOT** use the broil pan without the insert. **DO NOT cover the broil pan insert with foil.** The exposed grease could catch fire. **DO NOT** use the roasting rack when broiling.

To set a Broil Temperature of 550°F:

1. Arrange interior oven racks.
2. Select oven by pressing either **UPPER OVEN** UPPER OVEN or **LOWER OVEN** LOWER OVEN.
3. Press **BROIL**.
4. Press **START**.
5. Place food in the oven after 2 minutes.
6. Turn food when the top side is browned and cook on the second side.
7. Remove food. Always use oven mitts when removing hot pans from the oven.
8. Press **CANCEL** to stop or cancel the Broil feature at any time.

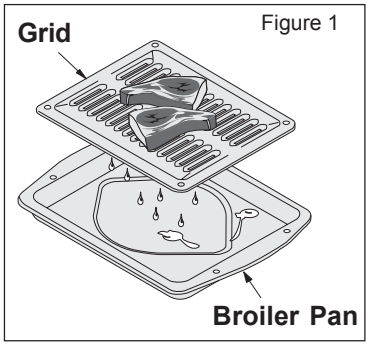

Figure 1

Broiling Times

Electric Wall Oven Broiling Table Recommendations

Food Item	Rack Position	Temp Setting	Cook Time *1st side*	*2nd side*	Doneness
Steak 1" thick	7	550° F	6:00	4:00	Rare
	7	550° F	7:00	5:00	Medium
Pork Chops 3/4" thick	7	550° F	8:00	6:00	Well
Chicken - Bone In	5	450° F	20:00	10:00	Well
Chicken - Boneless	7	450° F	8:00	6:00	Well
Fish	7	500° F	13:00	0:00	Well
Shrimp	5	550° F	5:00	0:00	Well
Hamburger 1" thick	7	550° F	9:00	7:00	Medium
	5	550° F	10:00	8:00	Well

WARNING Should an oven fire occur, close the oven door and turn off the oven. If the fire continues, throw baking soda on the fire or use a fire extinguisher. **DO NOT** put water or flour on the fire. Flour may be explosive and water can cause a grease fire to spread and cause personal injury.

CONVECTION BAKING

This mode of cooking enables you to obtain the best culinary results when baking with multiple pans and racks. Multiple rack baking may slightly increase cook time for some foods but the overall result is time saved. Most foods cooked in a standard oven will cook faster and more evenly with Convection Bake. Convection baking uses the three elements and a fan to circulate the oven's heat evenly and continuously within the oven. The temperature probe can be used in this cooking mode. The oven can be programmed for Convection baking at any temperature between 170°F to 550°F with a default temperature of 350°F.

Convection Baking Tips:

- Always preheat your oven before using the Convection Bake mode.
- If your recipe cooking temperature has already been converted for convection baking there is no need to reduce your oven temperature. If your recipe has not had the temperature converted for convection baking you can easily reduce using the Convection Convert feature. Please see Convection Convert section on next page for further instruction on temperature conversion.
- Use tested recipes with times adjusted for convection baking when using this mode. With single rack convection baking the some foods may have as much as a 25% reduction in cook time, check food at minimum time. Time reductions will vary depending on the amount and type of food to be cooked.
- When using Convection Bake with a single rack, place oven rack in position 3 or 4. If cooking on multiple racks, place the oven racks in positions 2 and 6 or 1, 4 and 7.
- Most bakeries (except cakes) should be baked on pans with no sides or very low sides to allow heated air to circulate around the food.
- Food baked on pans with a dark finish will cook faster.

To set a Convection Bake Temperature of 350°F:

1. Arrange interior oven racks.
2. Select oven by pressing either **UPPER OVEN** UPPER OVEN or **LOWER OVEN** LOWER OVEN.
3. Press **CONVECTION BAKE**.
4. Press **START**. The oven display shows **PRE-HEATING**.
5. Place food in the oven when the chime signals and temperature display shows that the oven has reached the set target temperature and the **PRE-HEATING** message disappear.
6. The Temperature Probe, Cook Time, Timer, End Time and Rapid Preheat features can be set to control your cooking time (read their sections for directions).
7. Remove food. Always use oven mitts when removing hot pans from the oven.
8. Press **CANCEL** to stop or cancel the Convection Bake feature at any time.

CONVECTION CONVERT

The Convection Convert pad is used to automatically convert a standard baking recipe for convection baking. When set properly, this feature is designed to display the actual converted (reduced) temperature in the display. Convection Convert may ONLY be used with a Convection Bake cooking mode. It can be used with the features End Time and Cook Time (see their sections for directions). If convection conversion is used with the cook time and end time features, "**CF**" (check food) will be displayed when 75% of the bake time complete. At this time the oven control will sound 3 long beeps at regular intervals until baking had finished. When the bake time has completely finished the control will beep at regular interval until the **CANCEL** pad is pressed. **NOTE**: To use this feature with the **COOK TIME** option, the **COOK TIME** pad must be pressed before the **CONVECTION CONVERT** pad.

Changing from a normal bake temperature to a convection bake temperature:

1. Select oven by pressing either **UPPER OVEN** UPPER OVEN or **LOWER OVEN** LOWER OVEN.
2. Press **CONVECTION BAKE**.
3. Press **COOK OPTIONS**. The cook options items will light up.
4. Press **CONVECTION CONVERT**. The temperature displayed will be 25°F lower than what it used to be.
5. Press **START** to begin the convection baking (see Convection Baking section for more informations).

RAPID PREHEAT

The Preheat feature will bring the oven up to temperature faster than a regular preheat and then indicate when to place the food in the oven. Preheating is not necessary when roasting or cooking casseroles. The oven can be programmed to preheat at any temperature between 170°F to 550°F with some of the cooking modes; Bake, Convection Bake and Convection Roast.

IMPORTANT: The rapid preheat feature is for single rack ONLY. The heat distribution with multiple rack will be uneven.

To set a rapid preheat *(example is for a 350°F Bake)*:

1. Select oven by pressing either **UPPER OVEN** UPPER OVEN or **LOWER OVEN** LOWER OVEN.
2. Press **BAKE**.
3. Press **COOK OPTIONS**. The cook options items will light up.
4. Press **RAPID PREHEAT** >>.
5. Press **START** to begin the baking with the rapid preheat feature enabled.
6. Place food in the oven when the chime signals and PRE-HEATING message disappears indicating that the oven has reached the set target temperature.

CONVECTION ROASTING

This mode is best for cooking tender cuts of beef, lamb, park and poultry. Use this mode when cooking speed is desired. The Convection Roasting gently browns the exterior and seals in the juices. Convection roasting uses the hidden bake element, the hidden convection element, the broil element and a fan to circulate the oven's heat evenly and continuously within the oven. The temperature probe can be used in this cooking mode. The oven can be programmed for Convection Roasting at any temperature between 170°F to 550°F with a default temperature of 350°F.

Convection Roasting Tips:

- Use the broiler pan and grid, and the roasting rack. The broiler pan will catch grease spills and the grid will help prevent spatters. The roasting rack will hold the meat.
- Place an oven rack on rack position 2 (next-bottom).
- Make sure the roasting rack is securely seated on the grid in the broiler pan. The roasting rack fits on the grid allowing the heated air to circulate under the food for even cooking and helps to increase browning on the underside.
- There is no need to reduce the convection temperature or to use the Convection Convert feature with this cooking mode.
- **DO NOT** use the broiler pan without the grid or cover the grid with aluminum foil.
- Always pull the rack out to the stop position before removing food.
- Position food (fat side up) on the roasting rack.

To set a Convection Roast Temperature of 350°F:

1. Arrange interior oven racks.
2. Select oven by pressing either **UPPER OVEN** UPPER OVEN or **LOWER OVEN** LOWER OVEN.
3. Press **CONVECTION ROAST**.
4. Press **START**.
5. The Temperature Probe, Cook Time, Timer, End Time and Rapid Preheat features can be set to control your cooking time (read their sections for directions).
6. Remove food. Always use oven mitts when removing hot pans from the oven.
7. Press **CANCEL** to stop or cancel the Convection Roast feature at any time.

Convection Roasting Chart

Meat		Weight	Oven Temp	Internal Temp	Min per lb.
Beef	Standing rib roast	4 to 6 lbs.	350° F	*	25-30
	Rib eye roast	4 to 6 lbs.	350° F	*	25-30
	Tenderloin roast	2 to 3 lbs.	400° F	*	15-25
Poultry	Turkey, whole**	12 to 16 lbs.	325° F	180° F	8-10
	Turkey, whole**	16 to 20 lbs.	325° F	180° F	10-15
	Turkey, whole**	20 to 24 lbs.	325° F	180° F	12-16
	Chicken	3 to 4 lbs.	350-375° F	180° F	12-16
Pork	Ham roast, fresh	4 to 6 lbs.	325° F	160° F	30-40
	Shoulder blade roast	4 to 6 lbs.	325° F	160° F	20-30
	Loin	3 to 4 lbs.	325° F	160° F	20-25
	Pre-cooked ham	5 to 7 lbs.	325° F	160° F	30-40

** For beef: med rare 145°F, med 160°F, well done 170°F*

*** Stuffed turkey requires additional roasting time. Shield legs and breast with foil to prevent overbrowning and dying of the skin.*

CONVECTION BROILING

Use this mode for thicker cuts of meat, fish and poultry. The Convection Broiling gently browns the exterior and seals in the juices. Convection broiling uses the broil element and a fan to circulate the oven's heat evenly and continuously within the oven. The temperature probe cannot be used in this cooking mode. The oven can be programmed for Convection Broiling at any temperature between 300°F to 550°F with a default temperature of 550°F.

Convection Broiling Tips:

- For optimum browning, preheat the broil element for 2 minutes.
- Broil one side until the food is browned; turn and cook on the second side. Season and serve.
- Always pull the rack out to the "stop" position before turning or removing food.
- Always use the broiler pan and its grid when broiling. It allows the dripping grease to be kept away from the high heat of the broil element (see Figure 1).
- **DO NOT** use the broil pan without the insert. **DO NOT cover the broil pan insert with foil.** The exposed grease could catch fire. **DO NOT** use the roasting rack when broiling.
- Convection broiling is generally faster than conventional broiling. Check for doneness at the minimum recommended time.

IMPORTANT: Always use this cooking mode with the oven door closed or the fan will not turn on.

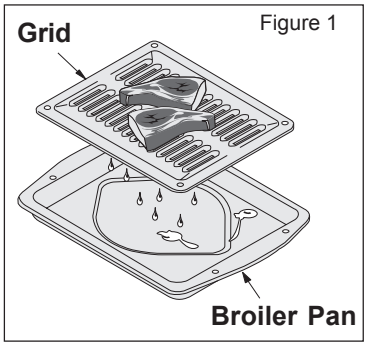

Figure 1

To set a Convection Broil Temperature of 550°F:

1. Arrange interior oven racks.
2. Select oven by pressing either **UPPER OVEN** UPPER OVEN or **LOWER OVEN** LOWER OVEN.
3. Press **CONVECTION BROIL**.
4. Press **START**.
5. Place food in the oven after 2 minutes.
6. Turn food when the top side is browned and cook on the second side.
7. Remove food. Always use oven mitts when removing hot pans from the oven.
8. Press **CANCEL** to stop or cancel the Convection Broil feature at any time.

WARNING Should an oven fire occur, leave the oven door closed and turn off the oven. If the fire continues, throw baking soda on the fire or use a fire extinguisher. **DO NOT** put water or flour on the fire. Flour may be explosive and water can cause a grease fire to spread and cause personal injury.

KEEP WARM

This mode is best for keeping oven baked foods warm for serving after cooking has finished. The Keep Warm feature uses the hidden bake element to maintain the temperature within the oven. The Keep Warm feature may be used with Multi-Stage (refer to its section for directions) if you wish to have the Keep Warm feature turn ON automatically when cooking has finished. The oven can be programmed for Keep Warm at any temperature between 150°F to 190°F with a default temperature of 170°F.

Keep Warm Tips:

- Always start with hot food.
- Do not use the Keep Warm feature to heat cold food.
- Food in heat-safe glass and glass ceramic containers may need higher temperature settings compared to food in regular containers.
- Avoid repeated openings of the oven, it will allow hot air to escape and the food to cool.
- Aluminum foil may be used to cover food to increase moisture content.

To set a Warm Keep Temperature of 170°F:

1. Arrange interior oven racks.
2. Select oven by pressing either **UPPER OVEN** UPPER OVEN or **LOWER OVEN** LOWER OVEN.
3. Press **KEEP WARM**.
4. Press **START**.
5. The Multi-Stage, Cook Time, Timer and End Time features can be set to control your warming time (read their sections for directions).
6. Remove food. Always use oven mitts when removing hot pans from the oven.
7. Press **CANCEL** to stop or cancel the Keep Warm feature at any time.

SLOW COOK

This mode may be used to cook foods more slowly, at lower oven temperatures and provide cooking results much the same way as a Slow Cooker or Crock-Pot. The Slow Cook feature is ideal for roasting beef, pork & poultry. Slow Cooking meats may result in the exterior of meats becoming dark but not burnt. This is normal. The Slow Cook mode uses the hidden bake element to maintain a low temperature in the oven. The temperature probe cannot be used in this cooking mode. There are 2 settings available, high (HI) or low (LO). The maximum cook time for the Slow Cook feature is 12 hours unless the oven control has been changed to the Continuous Bake mode or the Sabbath mode has been activated.

Slow Cook Tips:

- Completely thaw all frozen foods before cooking with the Slow Cook feature.
- When using a single rack, position it in the center of the oven.
- Position multiple racks to accommodate size of cooking utensils when cooking multiple food items.
- Do not open the oven door often or leave the door open when checking foods. If the oven heat escapes often, the Slow Cook time may need to be extended.
- Cover the foods to keep them moist or use a loose or vented type cover to allow foods to turn crisp or brown.
- Cook times will vary; depending on the weight, fat content, bone & the shape of the meat.
- Use the recipe's recommended food temperature and a food thermometer to determine when the food is done.
- Preheating the oven will not be necessary when using the Slow Cook feature.
- Add any cream or cheese sauces during the last hour of cooking.

To set a Slow Cook:

1. Arrange interior oven racks and place food in the oven.
2. Select oven by pressing either **UPPER OVEN** UPPER OVEN or **LOWER OVEN** LOWER OVEN.
3. Press **SLOW COOK**.
4. Press + hi for high (**HI**) setting or - lo low (**Lo**) setting.
5. Press **START**.
6. The Cook Time, Timer and End Time features can be set to control your Slow Cook time (read their sections for directions).
7. Remove food. Always use oven mitts when removing hot pans from the oven.
8. Press **CANCEL** to stop or cancel the Slow Cook feature at any time.

DEHYDRATING

This mode dries foods with heat from the bake and the convection element. The heat is circulated throughout the oven by the convection fan. Dehydrating is used to dry and/or preserve foods such as fruits, meats, vegetables and herbs. This mode holds an optimum low temperature while circulating the heated air to slowly remove moisture. The oven can be programmed for Dehydrating at any temperature between 100°F to 225°F with a default temperature of 120°F.

Dehydrating Tips:

- Do not preheat the oven.
- Multiple racks can be used simultaneously.
- Drying times vary depending on the moisture and sugar content of the food, the size of the pieces, the amount being dried and the humidity in the air.
- Check food at the minimum drying time.
- Treat fruits with antioxidants to avoid discoloration.
- Consult a food preservation book or a library for additional information.

To set a Dehydrate Temperature of 120°F:

1. Arrange interior oven racks and place food.
2. Select oven by pressing either **UPPER OVEN** UPPER OVEN or **LOWER OVEN** LOWER OVEN.
3. Press **DEHYDRATE** .
4. Press **START** to begin dehydrating.
5. Remove food. Always use oven mitts when removing hot pans from the oven.
6. Press **CANCEL** to stop or cancel the Dehydrate feature at any time.

DEFROSTING

This mode uses a fan controlled defrosting to quickly warm your food at the room's temperature. Suitable for delicate items such as cream cakes, this light defrost circulates room temperature air around the food slowly, defrosting it hygienically in less time!

Defrosting Tips:

- Place an oven rack on next-bottom rack position.

To set a Defrost:

1. Arrange interior oven racks and place food in the oven.
2. Select oven by pressing either **UPPER OVEN** UPPER OVEN or **LOWER OVEN** LOWER OVEN.
3. Press **DEFROST** .
4. Press **START** to start the defrosting. A "dEF" message is displayed when active.
5. The Cook Time, End Time and Timer features can be set to control your Defrost time (read their sections for directions).
6. Remove food.
7. Press **CANCEL** to stop or cancel the Defrost feature at any time.

CAUTION It is not recommended to use food that can spoil due to bacteria growth. Defrost only items which are recommended for countertop thawing.

BREAD PROOFING

Proofing bread prepares the dough for baking by activating the yeast. This feature is ideal for proofing, or rising bread dough. The oven can be programmed for Bread Proofing at any temperature between 85°F to 100°F with a default temperature of 100°F.

Bread Proofing Tips:

- No need to preheat for this feature.
- Proof bread until dough has doubled in bulk.
- For best results, place a shallow pan with 1 to 3 cups of boiling hot water on the lowest rack position to keep the air moist inside the oven cavity.
- Allow at least 1" between edge of pan and walls of the oven.
- Limit frequent door openings to prevent losing heat and lengthening proofing time.

To set a Bread Proof temperature of 100°F:

1. Arrange interior oven racks and place bread dough in the oven.
2. Select oven by pressing either **UPPER OVEN** UPPER OVEN or **LOWER OVEN** LOWER OVEN.
3. Press **BREAD PROOF** .
4. Press **START** to begin the bread proofing.
5. The Cook Time, Timer and End Time features can be set to control your Bread Proof time (read their sections for directions).
6. Remove food.
7. Press **CANCEL** to stop or cancel the Bread Proof feature at any time.

To change a Bread Proof temperature while the function is active:

1. Select oven by pressing either **UPPER OVEN** UPPER OVEN or **LOWER OVEN** LOWER OVEN.
2. Press the **HI** + hi or **LO** - lo pads to get to the desired temperature.
3. Press **START** to continue the bread proofing with the new setting.

PERFECT TURKEY

This mode uses the temperature probe to control precisely the cooking of a perfect turkey. The convection system gently browns the turkey's exterior and seals in the juices. The temperature probe is **required** with this cooking mode (read its section on next page for more details). The oven can be programmed for Perfect Turkey at any temperature between 170°F to 550°F with a default temperature of 325°F. The probe default temperature for the perfect turkey feature is 180°F.

Perfect Turkey Tips:

- Thaw the turkey in the refrigerator at least 24 hours per 5 lbs before cooking the bird.
- Do not preheat your oven before using the Perfect Turkey mode.
- Use the broiler pan and grid, and the roasting rack. The broiler pan will catch grease spills and the grid will help prevent spatters. The roasting rack will hold the turkey.
- Place an oven rack on rack position 2 (next-bottom).
- Make sure the roasting rack is securely seated on the grid in the broiler pan. The roasting rack fits on the grid allowing the heated air to circulate under the food for even cooking and helps to increase browning on the underside.

To set a Perfect Turkey:

1. Arrange interior oven racks and place food in the oven.
2. Insert the meat probe into the bird and connect it in the oven (read the probe section on next page for more details).
3. Select oven by pressing either **UPPER OVEN** UPPER OVEN or **LOWER OVEN** LOWER OVEN.
4. Press **PERFECT TURKEY**. A temperature can be entered if another value than the default is needed.

Optional: Press **PROBE** if you wish to change the probe target temperature (see PROBE section).

5. Press **START**.
6. Remove food from the oven when the probe chime signals that the bird internal temperature has reached its target temperature.
7. Press **CANCEL** to stop or cancel the Perfect Turkey feature at any time.

Perfect Turkey Chart

		Weight	Oven Temp	Internal Temp	Min per lb.
Poultry	Turkey, whole*	12 to 16 lbs.	325° F	180° F	8-10
	Turkey, whole*	16 to 20 lbs.	325° F	180° F	10-15
	Turkey, whole*	20 to 24 lbs.	325° F	180° F	12-16
	Chicken	3 to 4 lbs.	350-375° F	180° F	12-16

** Stuffed turkey requires additional roasting time. Shield legs and breast with foil to prevent overbrowning and dying of the skin.*

TEMPERATURE PROBE

For many foods, especially roasts and poultry, testing the internal temperature is the best method to insure properly cooked food. The Temperature Probe gets the exact temperature you desire without having to guess. This feature can be used with Bake, Convection Bake, Convection Roast and Perfect Turkey cooking modes. The oven can be programmed for Probe at any temperature between 130°F to 210°F with a default temperature of 170°F. This unit is equipped with one temperature probe entry in each oven.

IMPORTANT:

1. Use only the probe supplied with your appliance; any other may result in damage to the probe or the appliance.
2. Handle the Temperature Probe carefully when inserting and removing it from the food and outlet.
3. Do not use tongs to pull the cable when inserting or removing the Probe. It could damage the Probe.
4. Defrost your food completely before inserting the Probe to avoid breaking it.
5. Never leave or store the Temperature Probe inside the oven when not in use.
6. To prevent the possibility of burns, carefully unplug the Temperature Probe using hot pads.

Proper Temperature Probe Placement:

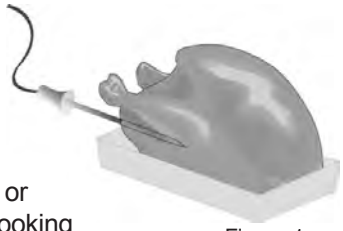

Figure 1

1. Always insert the probe so that the tip rests in the center of the thickest part of the meat. Do not allow probe to touch bone, fat, gristle or pan.
2. For bone-in ham or lamb, insert the Probe into the center of the lowest large muscle or joint. For dishes such as meat loaf or casseroles, insert the Probe into the center of the food. When cooking fish, insert the Probe from just above the gill into the meatiest area, parallel to the backbone.
3. For whole poultry (chicken, turkey, etc.), insert the probe into the thickest part of the inner thigh from below and parallel to the leg (see figure 1).

Setting the Oven when using the Temperature Probe:

1. Insert the Temperature Probe into the food (see Proper Temperature Probe Placement above).
2. Plug the Temperature Probe into its outlet in the oven. (**The outlet is located on the top left hand side of the cavity wall, near front of the oven**). Always insert the probe into a cool oven. Make sure it is pushed all the way into the outlet. Close the oven door.
3. Select oven by pressing either **UPPER OVEN** UPPER OVEN or **LOWER OVEN** LOWER OVEN.
4. Select a cooking mode. A target temperature must be set to trigger the buzzer when the food reaches the set temperature. Press **COOK OPTIONS** to bring up the cook options items and press **PROBE** pad to enter the temperature. Adjust temperature to the desired setting using the numeric pads or just press **START** to use the default target temperature of 170°F. The pads + hi or - lo can also be pressed to raise or lower the temperature. The target temperature setting will be accepted after the **START** pad is pressed.
5. At any time during the cooking, the **PROBE** pad can be pressed once to display the actual meat temperature or pressed twice to display the target temperature. When on the target temperature display, a new temperature can be entered. After 5-8 seconds, the display will go back to showing the oven temperature.
6. When the food reach the target temperature, the oven will go into a **KEEP WARM** mode until you press **CANCEL**.

The probe can be damaged by very high temperature. To protect the probe against this damage, the oven control will not allow you to start a self-clean, broil or convection broil while the probe is connected.

MULTI STAGE

This feature enables you to perform sequential cooking at the touch of a button. Its purpose is to program a queue of up to three cooking modes with individual cooking time and temperatures in a sequence. This feature can be used with most cooking modes; Baking, Broiling, Convection Baking, Convection Roasting, Convection Broiling, Keep Warm and Bread Proof. A Cook Time can be programmed with your cooking mode and then queued. No Auto-Suggest default temperature is provided with this feature. Any stage programmed with Broil or Convection Broil cannot last longer than 10 minutes. A proper cook time and a set temperature are required for every stage programming. At least two stages must be programmed before a Multi-Stage cooking operation starts.

To set a Multi Stage sequence *(Timed Convection Bake, Timed Broil, Keep Warm)*:

1. Arrange interior oven racks and place food.
2. Select oven by pressing either **UPPER OVEN** UPPER OVEN or **LOWER OVEN** LOWER OVEN.
3. Press **MULTI STAGE** 1 2 3.

Stage 1

4. Press **CONVECTION BAKE**. "**000**" will flash in the display prompting to enter a temperature.
5. Enter a temperature using the numeric pads 0 to 9.
6. Press **START**. "**00:00**" will start flashing in the display prompting to enter a cook time.
7. Enter a cook time using the numeric pads 0 to 9.
8. Press **START**. The Multi-Stage indicator will now display the 2nd stage.

Stage 2

9. Press **BROIL**. "**000**" will start flashing in the display prompting to enter a temperature.
10. Enter a temperature using the numeric pads 0 to 9.
11. Press **START**. "**00:00**" will start flashing in the display prompting to enter a cook time.
12. Enter a cook time using the numeric pads 0 to 9.
13. Press **START**. The Multi-Stage indicator will now display the 3rd stage. If a third stage is not needed, press **START** a second time. This will start the cooking sequence.

Stage 3

14. Press **KEEP WARM**. "**000**" will start flashing in the display prompting to enter a temperature.
15. Enter a temperature using the numeric pads 0 to 9.
16. Press **START**. "**00:00**" will start flashing in the display prompting to enter a cook time.
17. Enter a cook time using the numeric pads 0 to 9.
18. Press **START** **twice**. The cooking sequence will begin.

Canceling

19. At the end of the sequence, the display will show "**End**" and a chime will sound.
20. Remove food.
21. Press **CANCEL** to stop or cancel the Multi-Stage sequence at any time.

To review and edit a Multi Stage sequence:

Once the first and second stages have been programmed, the control displays a Review Screen. During this mode, the temperature display is cleared, the stage numbers are lit and the numeric pads corresponding to the programmed stages are lit.

To review a programmed stage cooking mode, press the corresponding numeric pad. The temperature and cook time pads will light up and the control will display the programmed values.

To edit a programmed stage cooking mode being reviewed, press **CANCEL**. This will bring you back to the programming steps explained in the previous page. The third stage cannot be edited but can be deleted by pressing **CANCEL** on the review screen. To return to the review screen from the programming screen, at any time press **MULTI STAGE** 1 2 3.

To begin the cooking sequence from the review screen, simply press **START**.

USER PREFERENCES

The user preferences menu includes all user defined options. This feature enables you to control the various options of the electronic controls. This menu features the Time of Day, Celsius or Fahrenheit display mode, Continuous Bake or 12 Hour Energy Saving modes, Clock display or No-Clock display, 12 Hours Time of Day or 24 Hours Time of Day, Audio Control and Adjusting the oven temperature. The User Preferences menu is only available when the oven is not being used (not cooking).

To browse through the User Preferences menu:

1. Press **USER PREF** to bring up the User Preferences menu.
2. Press **USER PREF** again to browse through the menu pages.
3. Press + hi or - lo to toggle between the available options.
4. Press **START** while the chosen option is on display to change.
5. Press **CANCEL** when finished to get back to the standard oven display.

User Preferences menu items:

- **CLO 12:00**; Setting the clock.
- **CLO on**; Clock on/off.
- **CLO 12hr**; 12/24 hour time of day display.
- **UPO**; Adjusting oven temperature.
- **F-C F**; Fahrenheit / Celcius display.
- **AUd**; Audio on/off and volume.
- **E S on**; 12 hour Energy Saving on/off.
- **rSt** ; Reset to default factory settings.

SETTING THE CLOCK - TIME OF DAY

The clock may be set for 12 or 24 hour time of day operation (see advanced settings section). The clock has been preset at the factory for the 12 hour operation. When the range is first plugged in, or when the power supply to the range has been interrupted, the display will show **"CLO 12:00"**. The clock must be set before the oven can be used.

When power to the unit has been interrupted, to set the Clock, skip step 1 in the example below and follow steps 2 and 3.

To set the clock (example for 1:30):

1. Press **USER PREF** until you get to the **CLO 12:00** menu page.
2. Press 1 3 0 pads to set the time of day to 1:30. The pads + hi or - lo can also be pressed to raise or lower the actual time displayed.
3. Press **START** to accept the changes and go back to user preferences menu display.

SETTING CLOCK DISPLAY — ON OR OFF

The oven control can be programmed to display the time of day or not. The oven has been preset at the factory to display the time of day.

Changing clock display between ON and OFF:

1. Press **USER PREF** until you get to the **CLO on** menu page.
2. Press - lo or + hi to toggle between displaying or hiding the clock.
3. Press **START** to accept the changes and go back to user preferences menu display.

SETTING TIME OF DAY DISPLAY — 12 OR 24 HOURS

The oven control can be programmed to display time of day in 12 hours or 24 hours mode. The oven has been preset at the factory to display in 12 hours mode.

Changing between 12 or 24 hour time of day display:

1. Press **USER PREF** until you get to the **CLO 12hr** menu page.
2 Press - lo or + hi to toggle the display of the clock in 12 or 24 hours.
3. Press **START** to accept the changes and go back to user preferences menu display.
4. Remember to set your clock after changing the time of day display mode.

ADJUSTING OVEN TEMPERATURE

The temperature in the oven has been pre-set at the factory. When first using the oven, be sure to follow recipe times and temperatures. If you think the oven is too hot or too cool, the temperature in the oven can be adjusted. Before adjusting, test a recipe by using a temperature setting that is higher or lower than the recommended temperature. The baking results should help you to decide how much of an adjustment is needed. Each oven can be individually adjusted.

To adjust the oven temperature:

1. Press **USER PREFERENCES** until you get to the ☐ **UPO** menu page.
2. If youwant to adjust the temperature in the lower oven, press **USER PREFERENCES** again. ☐ **UPO** will appear in the lower display.
3. Enter the temperature by pressing the + hi or - lo pads. The temperature can only be adjusted by ± 35°F.
4. Press **START** to accept the changes and go back to user preferences menu display.

FIRST RISE

It is normal to see a temperature overshoot in the first rise of all modes when you monitor the temperature.

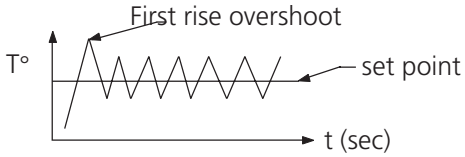

SETTING TEMPERATURE DISPLAY — FAHRENHEIT OR CELSIUS

The oven control can be programmed to display temperatures in Fahrenheit or Celsius. The oven has been preset at the factory to display in Fahrenheit.

To change display from Fahrenheit to Celsius or Celsius to Fahrenheit:

1. Press **USER PREF** until you get to the **F-C F** menu page.
2. Press + hi or - lo to toggle between the **°C** and **°F** display options.
3. Press **START** to accept the changes and go back to user preferences menu display.

AUDIO CONTROL

The Audio Control feature allows the oven control to be operated without sounds or beeps whenever necessary. If desired the control can be programmed for silent operation and later returned to operating with all the default sounds and beeps. The volume of the beeps can also be adjusted.

To change the audio mode or audio volume:

1. Press **USER PREF** until you get to the **AUd** menu page.
2. Press + hi or - lo to toggle between the available volume settings. **AUd 5** for the highest volume setting to **AUd 1** for the lowest volume. **AUd OFF** to disable the beeps.
3. Press **START** to accept the changes and go back to user preferences menu display.

SETTING CONTINUOUS BAKE OR 12 HOUR ENERGY SAVING

The oven control has a factory preset built-in 12 Hour Energy Saving feature that will shut off the oven if the oven control is left on for more than 11 hours and 59 minutes. The oven can be programmed to override this feature for Continuous Baking.

Changing between 12 hour energy saving and continuous bake:

1. Press **USER PREF** until you get to the **E S** menu page.
2. Press + hi or - lo to toggle the energy saving setting on and off.
3. Press **START** to accept the changes and go back to user preferences menu display.

RESETING TO DEFAULT FACTORY SETTINGS

The oven control can be set to return to its original factory settings. This includes: Setting the Clock ON/OFF to ON, Setting the clock display mode to 12h, Display mode to Fahrenheit, Setting the oven temperature adjustment to zero, Setting audio level to 5 and Enabling the 12h energy saving mode. Reseting the control also erase the My Favorite recipes.

To reset the oven control to its original settings:

1. Press **USER PREF** until you get to the **rSt no** menu page.
2. Press + hi or - lo to select **YES**.
3. Press **START** to reset to default factory settings.

MY FAVORITES

The Favorites settings allows you to save your most frequently used or most complex cooking sequences. This feature will save the cooking mode, the target temperature and the cooktime (if any). The oven can recall up to six cooking sequences from its internal memory, three for each oven, which are easily accessible from a one touch button. These functions can be used with all cooking modes and features.

To save a Favorite *(example is a 450°F Bake for 30 minutes)*:

- Saving a Favorite can only be done for an oven which is currently in operation.

1. Select oven by pressing either **UPPER OVEN** UPPER OVEN or **LOWER OVEN** LOWER OVEN.
2. Press **BAKE**. The default temperature will appear in the display.
3. Enter temperature needed; 4 5 0.
4. Press **COOK OPTIONS** to bring up the cook options items.
5. Press **COOK TIME**. The time numbers will blink in the display.
6. Enter time needed; 3 0.
7. Press **START**.
8. Press and hold for 3 seconds any **MY FAVORITE** pad. Notice that the red indicator above the key will light up.

To recall a Favorite:

- Recalling a Favorite can only be done for an oven which is not currently in operation.

1. Select oven by pressing either **UPPER OVEN** UPPER OVEN or **LOWER OVEN** LOWER OVEN.
2. Press any **MY FAVORITE** pad which is currently lighted up.
3. Press **START**.

To overwrite a Favorite:

1. To overwrite a My Favorite simply start a new cooking sequence and save it into the same My Favorite location (1, 2 or 3) for the selected oven as shown in example above. The new My Favorite settings will overwrite the old ones.

To delete a Favorite:

1. Select oven by pressing either **UPPER OVEN** UPPER OVEN or **LOWER OVEN** LOWER OVEN.
2. Press the currently lighted up **MY FAVORITE** pad you wish to delete for **3 seconds**.

SABBATH FEATURE
(FOR USE ON THE JEWISH SABBATH & HOLIDAYS)

The **HI** $^{+}_{hi}$ and **LO** $^{-}_{lo}$ pads are used to set the Sabbath feature. The Sabbath feature may only be used with the **BAKE** pad. The oven temperature may be set higher or lower after setting the Sabbath feature (the oven temperature adjustment feature should be used only during Jewish Holidays), however the display will not visibly show or provide any audible tones indicating whether the change occurred correctly. Once the oven is properly set using Bake with the Sabbath feature active, the oven will remain continuously ON until cancelled. This will override the factory preset 12-Hour Energy Saving feature.

If the oven light will be needed during the Sabbath, press **OVEN LIGHT** before activating the Sabbath feature. Once the oven light is turned ON and the Sabbath feature is active, the oven light will remain ON until the Sabbath feature is turned OFF. If the oven light needs to be OFF, be sure to turn the oven light OFF before activating the Sabbath feature.

IMPORTANT NOTES: It is not advised to attempt to activate any other program feature other than **BAKE** while the Sabbath feature is active. ONLY the following key pads will function after setting the Sabbath feature; **0** to **9**, **BAKE**, **START**, **CANCEL**, **HI** $^{+}_{hi}$ and **LO** $^{-}_{lo}$.
ALL OTHER KEYPADS will not function once the Sabbath feature is properly activated.

To Program the Upper Oven to Begin Baking Immediately & Activate the Sabbath feature (example: baking at 350°F)

1. Place the food in the oven.
2. Select oven by pressing either **UPPER OVEN** UPPER OVEN or **LOWER OVEN** LOWER OVEN.
3. Press **BAKE**.
4. If you desire to set the oven control for a **COOK TIME** do so at this time. If not, skip this step and continue to step 5. Refer to their section for complete instructions. Remember the oven will shut down after using **COOK TIME** and therefore may only be used once during the Sabbath/Jewish Holidays.
5. Press **START**.
6. The oven will turn ON and begin heating immediately.
7. Press and hold both the **HI** $^{+}_{hi}$ and **LO** $^{-}_{lo}$ pads for at least 3 seconds. **SAb** will appear in the oven display. Once SAb appears in the display the oven control will no longer beep or display any further changes and the oven is properly set for the Sabbath feature.

Note: You may change the oven temperature once baking has started. Press **UPPER OVEN** UPPER OVEN, **BAKE**, the numeric key pads for the temperature you want (example for 425°F press **4**, **2**, **5**) and then press **START** **TWICE** (for Jewish Holidays only). Remember that **the oven control will no longer beep or display any further changes** once the oven is set for the Sabbath feature.

8. The oven may be turned OFF at any time by pressing **CANCEL** pad (this will turn the oven OFF only). To turn OFF the Sabbath feature press and hold both the **HI** $^{+}_{hi}$ and **LO** $^{-}_{lo}$ pads for at least 3 seconds. **SAb** will disappear from the display.

Should you experience a power failure or interruption, the oven will shut off. When power is returned the oven will not turn back on automatically. **SF** (Sabbath Failure) will be displayed in the oven control display. The oven will remember that it is set for the Sabbath and the food may be safely removed from the oven while still in the Sabbath feature, however the oven cannot be turned back on until after the Sabbath. After the Sabbath observance turn OFF the Sabbath feature. Press and hold both the **HI** $^{+}_{hi}$ and **LO** $^{-}_{lo}$ pads for at least 3 seconds. **SAb** will disappear from the display and the oven may be used with all normal functions. For further assistance, guidelines for proper usage, and a complete list of models with the Sabbath feature, please visit the web at **http:\\www.star-k.org.**

USING THE SELF-CLEAN FEATURE

Adhere to the Following Cleaning Precautions:

- Allow the oven to cool before cleaning.
- Wear rubber gloves when cleaning any exterior parts of the oven manually.

During the self-cleaning cycle, the outside of the oven can become very hot to the touch. DO NOT leave small children unattended near the appliance.

Before cleaning any part of the oven, be sure the oven is turned off or else push **CANCEL** pad. Wait until the oven is cool.

DO NOT use commercial oven cleaners or oven protective coatings in or around any part of the self-cleaning oven. DO NOT clean the oven door gasket. The gasket on the oven door is essential for a good seal. Care should be taken not to rub, damage or move the gasket. DO NOT use any cleaning materials on the gasket. Doing so could damage it. DO NOT use aluminum foil to line the oven bottom. This may affect cooking or foil could melt and damage the oven surface.

Preparing the Oven for Self-Cleaning:

1. Remove any excess spillovers in the oven cavity before starting the self-cleaning cycle. To clean, use hot soapy water and a cloth. Large spillovers can cause smoke or a fire when subjected to high temperatures. DO NOT allow food spills with a high sugar or acid content (such as tomatoes, sauerkraut, fruit juices or pie filling) to remain on the surface as they may leave a dull spot even after cleaning.
2. Clean any soil from the oven frame and the door liner (see illustration). These areas heat sufficiently during a self-clean to burn soil on. Clean with hot soapy water.
3. Remove the broiler pan and insert, all utensils and any foil. These items can not withstand high cleaning temperatures.
4. Oven racks and oven rack supports must be removed. If they are not removed the self-cleaning cycle can not start and Remove Racks will appear in the display indicating that you must remove the racks and racks supports. When the cycle has finished and the door can be opened replace the oven rack supports and oven racks.

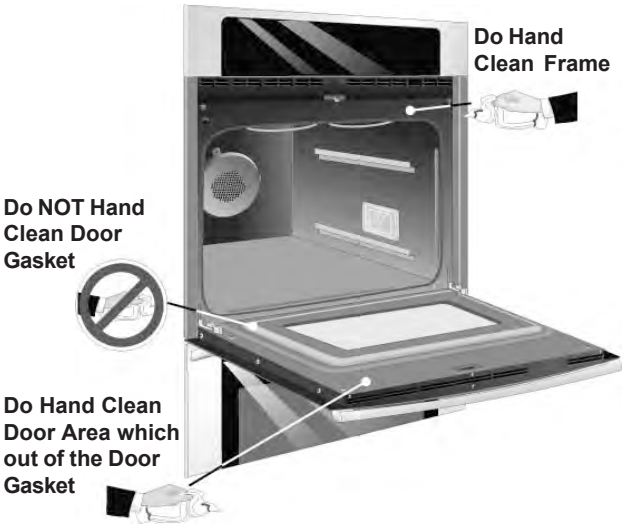

CAUTION The health of some birds is extremely sensitive to the fumes given off during the self-clean cycle of any wall oven. Move birds to another well ventilated room.

STARTING SELF-CLEAN CYCLE

A self-cleaning oven cleans itself with high temperatures (well above cooking temperatures) which eliminate soil completely or reduce it to a fine powdered ash you can whisk away with damp cloth. If you are planning to use the oven directly after a self-clean cycle remember to allow time for the oven to cool down and the oven door to unlock. This normally takes about one hour.

To set the controls for a Self-Cleaning cycle:

1. Remove the oven racks and the racks supports.
2. Be sure the clock is set with the correct time of day and the oven door is closed.
3. Select oven by pressing either **UPPER OVEN** UPPER OVEN or **LOWER OVEN** LOWER OVEN.
4. Press **CLEAN**.
5. Press **LITE** • for a 2 hour self-clean, or press **MEDIUM** • • for 3 hours, or press **HEAVY** • • • for 4 hours.
6. Press **START**. The **"DOOR** **"** icon will flash.
7. As soon as the control is set, the motor driven oven door lock will begin to close automatically. Once the door has been locked the "**DOOR** " indicator light will stop flashing and remain on.

Note: Allow about 15 seconds for the oven door lock to close.

To set the controls for a delayed Self-Cleaning cycle:

1. Follow the instructions above.
2. Press **COOK OPTIONS** to bring up the cook options items.
3. Press **END TIME**.
4. Enter time of day needed for the end of the cycle (example for “6:00”; 6 0 0).
5. Press **START**.

When the Self-Clean Cycle is Completed:

1. The time of day and "**DOOR** " will remain ON.
2. The display will show an “**Hot**” message while the oven is still too hot to open door.
3. Once the oven has cooled down for 1 HOUR, and the "**DOOR** " icon is no longer displayed, the oven door can then be opened.

Stopping or Interrupting a Self-Cleaning Cycle:

If it becomes necessary to stop or interrupt a self-cleaning cycle due to excessive smoke:

1. Press **CANCEL**.
2. Once the oven has cooled down for approximately 1 HOUR and the "**DOOR** " icon is no longer displayed,the oven door can then be opened.

WARNING During the self-cleaning cycle, the outside of the wall oven can become very hot to the touch. **DO NOT** leave small children unattended near the appliance; they may be burned if they touch the hot oven door surfaces.

CAUTION **DO NOT** force the oven door open. This can damage the automatic door locking system. Use care when opening the oven door after the self-cleaning cycle. Stand to the side of the oven when opening the door to allow hot air or steam to escape. The oven may still be VERY HOT.

ELECTRONIC OVEN CONTROL

1. This self-cleaning controller offers Bake, Broil, Convection Bake, Convection Roasting and Convection Broil modes, Dehydrating, Defrosting, Temperature Probe, Perfect Turkey (some models), Bread Proof, Keep Warm and Cleaning functions.
2. Convection operates with an element and a fan dedicated to convection.
3. This controller includes a display board, a relay board, and a convection fan and oven light control board.

NOTE: The controllers are not field repairable. Only temperature settings can be changed. See oven calibration.

ELECTRONIC OVEN DISPLAY BOARD FOR DOUBLE WALL OVEN

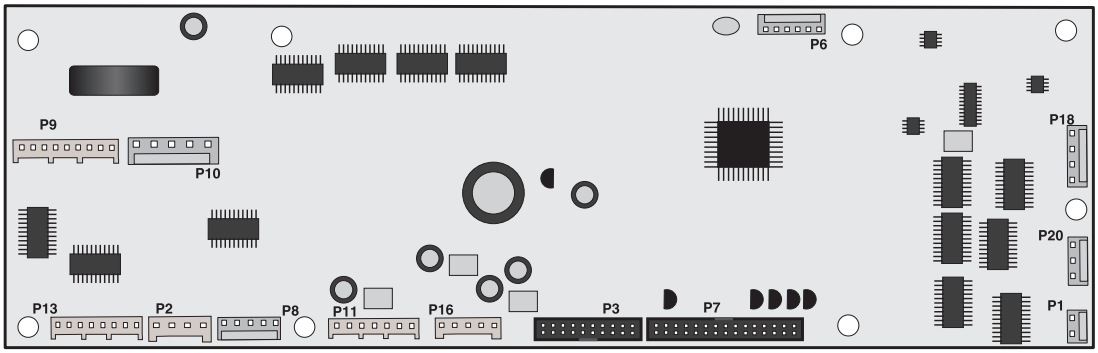

Connector Legend:
P1 - Upper Oven Probe Input
P2 - Communication with Convection Fan and Oven Light Control Board
P3 - Keyboard (touch panel)
P6 - Microprocessor Programming (not used)
P7 - Touch Panel LEDs
P8 - Power Supply Input for Touch Panel LEDs
P9 - Relay Control Output (heating elements, DLB, motor door latch) for Upper Oven
P10 - Switches Input (motor door latch switch, door switch, rack switch) for Upper Oven
P11 - Relay Control Output (heating elements, DLB, motor door latch) for Lower Oven
P12 - Switches Input (motor door latch switch, door switch, rack switch) for Lower Oven
P13 - Relay Control Output (cooling fans) for Upper and Lower Ovens
P16 - DC Power Supply Input
P18 - Upper and Lower Oven Meat Probe Input
P20 - Lower Oven Probe Input

ELECTRONIC OVEN RELAY BOARD FOR DOUBLE WALL OVEN

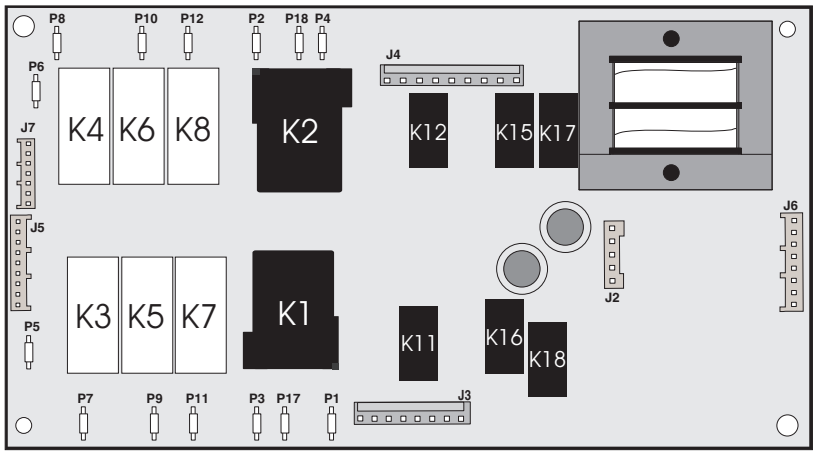

This relay board serves to energize the upper and lower oven heating elements, door lock motor and cooling fan.

Relay Board Legend:

K1. Double Line Break - Upper Oven
K2. Double Line Break - Lower Oven
K3. Broil Relay - Upper Oven
K4. Broil Relay - Lower Oven
K5. Bake Relay - Upper Oven
K6. Bake Relay - Lower Oven
K7. Convection Element Relay - Upper Oven
K8. Convection Element Relay - Lower Oven
K11. Motor Door Latch - Upper Oven
K12. Motor Door Latch Relay - Lower Oven
K15. Cooling Fan Relay Low Speed - Lower Oven
K16. Cooling Fan Relay Low Speed - Upper Oven
K17. Cooling Fan Relay High Speed - Lower Oven
K18. Cooling Fan Relay High Speed - Upper Oven

P1 - L2 Out, Upper Oven
P2 - L2 Out, Lower Oven
P3 - L2 In, Upper Oven
P4 - Not Used
P5 - L1, Upper Oven
P6 - L1, Lower Oven
P7 - Broil, Upper Oven
P8 - Broil, Lower Oven
P9 - Bake, Upper Oven
P10 - Bake, Lower Oven
P11 - Convection Element, Upper Oven
P12 - Convection Element, Lower Oven
P17 - Not Used
P18 - L2 In, Lower Oven

J2 - DC Power Output To Display Board
J3 - AC Power Output (motor door latch, cooling fan) For Upper Oven
J4 - AC Power Output (motor door latch, cooling fan) For Lower Oven and Power Input (L1, Neutral)
J5 - Relay Control Inputs (bake and broil elements, motor door latch, DLB) For Upper Oven
J6 - Relay Control Inputs (cooling fan, conv element) For Both Ovens
J7 - Relay Control Inputs (bake and broil elements, motor door latch, DLB) For Lower Oven

POWER SUPPLY BOARD FOR SINGLE AND DOUBLE WALL OVEN

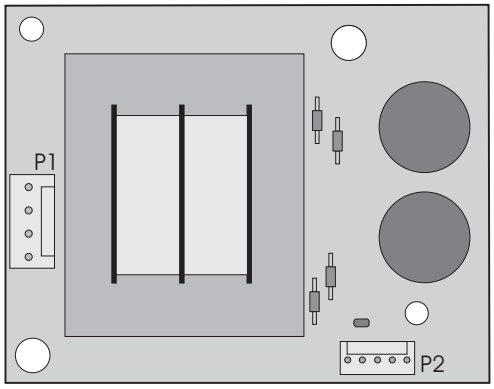

This board provides power to the oven control display.

P1 - AC Power Input (L2 and Neutral)

P2 - DC Power Output

CONVECTION FAN AND OVEN LIGHTS CONTROL BOARD

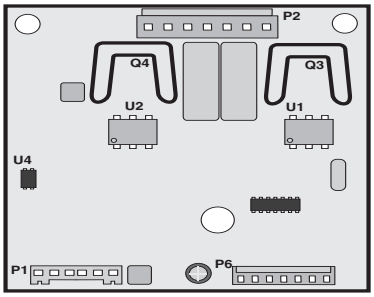

This board control the power output of the convection fan and oven lights. The double wall oven is equipped with 2 of these variable convection boards. One for each oven.

P1 - Communication with display board and power supply input
P2 - AC power output for convection fan and oven lights, power inputs (L1, neutral)
P6 - Microprocessor programming (not used)

ELECTRONIC OVEN CONTROL RELAY BOARD FOR SINGLE WALL OVEN

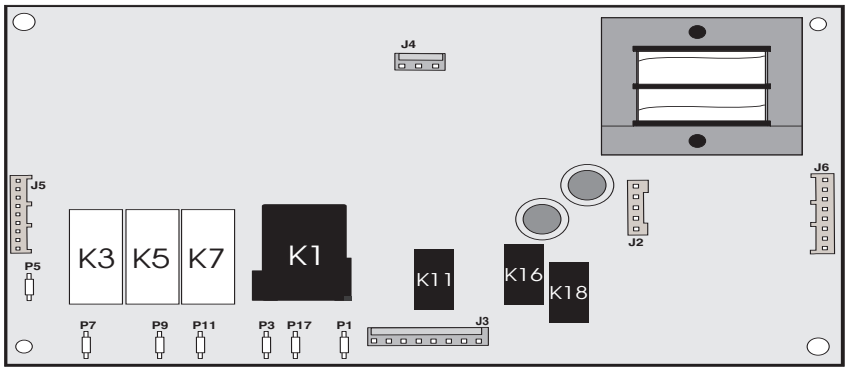

This relay board serves to energize the oven heating elements, door lock motor and cooling fan.

P1 - L2 Out
P3 - L2 In
P5 - L1
P7 - Broil
P9 - Bake
P11 - Convection Element
P17 - Not Used

Relay Board Legend:
K1. Double Line Break
K3. Broil Relay
K5. Bake Relay
K7. Convection Element Relay
K11.Motor Door Latch
K16. Cooling Fan Relay Low Speed
K18. Cooling Fan Relay High Speed

J2 - DC Power Output To Display Control Board
J3 - AC Power Output (motor door latch, light, cooling fan)
J4 - Power Input (L1, Neutral)
J5 - Relay Control Inputs (bake and broil elements, motor door latch, DLB)
J6 - Relay Control Inputs (cooling fan, conv element)

ELECTRONIC OVEN DISPLAY BOARD FOR SINGLE WALL OVEN

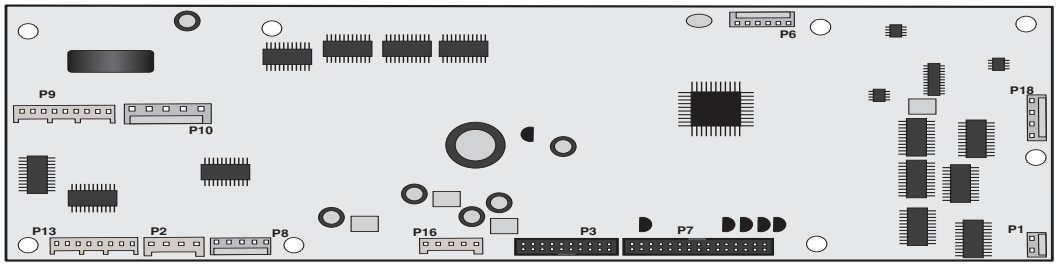

Connector Legend:
P1 - Oven Probe Input
P2 - Communication with Convection Fan and Oven Light Control Board
P3 - Keyboard (touch panel)
P6 - Microprocessor Programming (not used)
P7 - Touch Panel LEDs
P8 - Power Supply Input for Touch Panel LEDs
P9 - Relay Control Output (heating elements, DLB, motor door latch)
P10 - Switches Input (motor door latch switch, door switch, rack switch)
P13 - Relay Control Output (cooling fans)
P16 - DC Power Supply Input
P18 - Meat Probe Input

CONVECTION MODE

The convection oven uses the addition of a fan and an element to heat and to move the air already in the oven. Moving the heated air helps to destratify the heat and cause uniform heat distribution. The air is drawn in through a fan shroud and the element located on the rear wall of the oven. It is then discharged around the outer edges of this shroud. The air circulates around the food and then enters the shroud again. As with conventional electric wall ovens, there is still an oven vent which discharges above the door. In preheat of non-convection cooking modes, the convection fan will be operating until the oven has reached the target temperature.

To set the control in convection mode, follow these steps:

1. On a double wall oven: Select oven by pressing either **UPPER OVEN** UPPER OVEN or **LOWER OVEN** LOWER OVEN.
2. Press **CONVECTION BAKE** or **CONVECTION ROAST** or **CONVECTION BROIL**.
3. Press **START**. The oven will automatically start and the fan will begin to run.
4. Press **CANCEL** to stop or cancel the Convection feature at any time.

NOTE: The fan runs continuously while in the convection mode. The fan will stop if the door is opened while convection baking/roasting/broiling. The convection element will stop operating if the door is opened. The speed of the convection fan will vary depending on which cooking function is used. Convection Roast uses a fast fan speed, while convection bake uses a slower fan speed.

CONVECTION FAN MOTOR

The 120V fan motor is located on the outside of the rear of the oven.

The fan motor runs continuously while in convection mode unless the door is opened.
It is normal to see the fan speed changing depending on the cooking function that is used. This appliance uses the optimum fan speed for each convection function.
It is the Convection Fan and Oven Lights Control Board that modulates the speed of the convection fan. It uses the fan speed information communicated by the display board.
On a double wall oven there are two Convection Fan and Oven Lights Control Boards, one for each cavity.

If the fan does not operate, check the following:
- The oven control display will give you an indication on when the convection fan should be on: rotating fan blades in the display means the fan should be ON. No rotating blades mean the convection fan is purposely not used.
- Verify proper operation of the door switch. If the control thinks the door is opened the convection fan will not work. If the oven light turns on when the door is opened and turn off when the door is closed then it's a good indication the door switch is good.
- If you are getting an F23 or F24 error code it means the display board is not able to communicate with the Convection Fan and Oven Lights Control Board, thus the convection fan will not operate. Check connections between the display board and the Convection Fan and Oven Lights Control Board. Refer to the fault code section for corrective actions.
- Check connections on the Convection Fan and Oven Lights Control Board. On connector P2: pin 3 should be Neutral, pin 5 should be L1 (120VAC) and pin 7 should go to the convection fan motor. The other terminal of the convection fan motor should be connected to Neutral.
- Fan motor coil resistance should be 15.0 ohm +/- 10%
- When the fan is ON you should see between 20 and 120VAC on the motor, depending on the fan speed.
- If there is no error code, the wiring is good and the fan coil is good then replace the Convection Fan and Oven Lights Control Board.

ELECTRONIC OVEN CONTROL (FAULT CODES)

ELECTRONIC OVEN CONTROL (EOC) FAULT CODE DESCRIPTIONS	
Note: Generally speaking "F1X" implies a control failure, "F3X" an oven probe problem, and "F9X" a latch motor problem.	
Failure Code/Condition/Cause	**Suggested Corrective Action**
F10 Control has sensed a potential runaway oven condition. Control may have shorted relay, RTD sensor probe may have a gone bad.	- Check RTD sensor probe and replace if necessary. If oven is overheating, disconnect power. If oven continues to overheat when power is reapplied, replace relay board and/or display board.
F11 Shorted Key: a key has been detected as pressed for a long period and will be considered a shorted key alarm and will terminate all oven activity.	- Press any key to clear the error. - If fault returns, replace the keyboard (touch panel). - If the problem persists, replace the display board.
F13 Control's internal checksum may have become corrupted.	- Press any key to clear the error. - Disconnect power, wait 30 seconds and reapply power. If fault returns upon power-up, replace display board.
F14 Misconnected keyboard cable	- Verify connection between display board and touch panel (2 ribbon cables). Make sure the cables are well connected at both ends. - If the cables are good, replace the touch panel.
F15 Controller self check failed.	- If the problem persists, replace the display board. - Replace the display board
F23 The controller failed to communicate with the (upper) convection fan and oven lights control board.	- Verify wiring between P2 on the display board and P2 on the convection fan and oven lights control board. - If wiring is good, replace convection fan and oven lights board. - If the problem persists, replace the display board.
F24 The controller failed to communicate with the lower convection fan and oven lights control board. (On double wall oven)	- Verify wiring between P2 on the display board and P2 on the convection fan and oven lights control board. - If wiring is good, replace convection fan and oven lights board. - If the problem persists, replace the display board.
F25 No zero cross signal detected on the upper or lower convection fan and oven lights control board.	- Make sure L1 and Neutral are connected to the convection fan and oven lights control board on connector P2 (P2 pin 3= neutral / P2 pin 5 = L1). - If problem persists, replace the upper and/or lower oven convection fan and oven lights control board.
F26 Missing lower oven select signal on the lower oven convection fan and oven lights control board (double wall oven only).	- The lower oven conv. fan and oven lights board is supposed to receive 5V on pin 5 of connector P1. This voltage originates from the display board (connector P2 pin 4), check wiring. - If problem persists, replace the con. fan and oven lights control board.
F30 Open RTD sensor probe/ wiring problem. Note: EOC may initially display an "F10", thinking a runaway condition exists. **F31** Shorted RTD sensor probe / wiring problem. Note: **F30** or **F31** is displayed when oven is in active mode or an attempt to enter an active mode is made.	- Check wiring in probe circuit for possible open condition. - Check RTD resistance at room temperature (compare to probe resistance chart). If resistance does not match the chart, replace the RTD sensor probe. - Let the oven cool down and restart the function. - If the problem persists, replace the display board.
F90 Door motor mechanism failure.	- Press any key to clear the error. - If it does not eliminate the problem, turn off power for 30 seconds, then turn on power. - Check wiring of Lock Motor, Lock Switch and Door Switch circuits. - Unplug the lock motor from the board and apply power (L1) directly to the Lock Motor. If the motor does not rotate, replace Lock Motor Assembly. - Check Lock Switch for proper operation (do they open and close, check with ohmmeter). The Lock Motor may be powered as in above step to open and close Lock Switch. If the Lock Switch is defective, replace Motor Lock Assembly. - If all above steps fail to correct situation, replace the display board and/or the relay board in the event of a motor that does not rotate. - If all the above steps fail to correct the situation, replace the display board in the event of a motor that rotates endlessly.

OVEN CIRCUIT ANALYSIS MATRIX

SINGLE WALL OVEN / UPPER OVEN ON DOUBLE WALL OVEN CIRCUIT ANALYSIS MATRIX

	On Relay Board ELEMENTS			Door	On Convection Fan and Oven Lights Control Board		On Display Board	On Relay Board		
	Bake P9	Broil P7	Conv. P13	Motor J3-5	Light P2-1	Convection Fan P2-7	Door Switch P8-3 / P8-5	DLB L2 out P1	Cooling Fan Low speed J3-7	Cooling Fan High speed J3-8
Bake	X	X	X*			X*		X	X	
Keep Warm	X							X	X	
Broil		X						X		X
Conv. Bake	X	X	X			X		X	X	
Conv. Roast	X	X	X			X		X	X	
Conv. Broil		X	X			X		X	X	
Clean	X	X	X**			X**		X	X	X
Locking				X						
Locked										
Unlocking				X						
Unlocked										
Light					X					
Door Open					X		X			
Door Closed										
Bread Proof	X							X	X	

LOWER OVEN ON DOUBLE WALL OVEN CIRCUIT ANALYSIS MATRIX

	On Relay Board ELEMENTS			Door	On Convection Fan and Oven Lights Control Board		On Display Board	On Relay Board		
	Bake P10	Broil P8	Conv. P16	Motor J4-6	Light P2-1	Convection Fan P2-7	Door Switch P10-3 / P10-6	DLB L2 out P2	Cooling Fan Low speed J4-8	Cooling Fan High speed J4-9
Bake	X	X	X*			X*		X	X	
Keep Warm	X							X	X	
Broil		X						X		X
Conv. Bake	X	X	X			X		X	X	
Conv. Roast	X	X	X			X		X	X	
Conv. Broil		X	X			X		X	X	
Clean	X	X	X**			X**		X	X	X
Locking				X						
Locked										
Unlocking				X						
Unlocked										
Light					X					
Door Open					X		X			
Door Closed										
Bread Proof	X							X	X	

Relay will operate in this condition only

* Convection element and fan are used for the first rise of temperature.

** Convection element & fan are used during the cleaning.

RTD SCALE & ELECTRICAL RATING

RTD SCALE		
Temp. °F	Temp. °C	Resistance (ohms)
32 ± 1.9	0.0 ± 1.1	1000 ± 4.0
75 ± 2.5	23.9 ± 1.4	1091 ± 5.3
250 ± 4.4	121.1 ± 2.4	1453 ± 8.9
350 ± 5.4	176.7 ± 3.0	1654 ± 10.8
450 ± 6.9	232.2 ± 3.8	1852 ± 13.5
550 ± 8.2	287.8 ± 4.6	2047 ± 15.8
650 ± 9.6	343.3 ± 5.3	2237 ± 18.5
900 ± 13.6	482.2 ± 7.6	2697 ± 24.4

ELECTRICAL RATING			
Kw Rating 240/208V	See Nameplate	Bake Element Wattage	2200W/1653W
Broil Element Wattage	27" Models 3400W/2554W 30" Models 4000W/3004W	Convection Element Wattage	Electrolux models 2500W/1879W Electrolux/ICON Models 1600W/1202W

OVEN TEMPERATURE SENSOR

MEAT PROBE RESISTANCE

Meat Probe Temperature VS Resistance Table		
Temp. Celsius	Temp. Fahrenheit	Probe Resistance
25°C	77°F	49.478 Kohm +/- 7%
50°C	122°F	17.737 Kohm +/- 4.9%
80°C	176°F	6.107 Kohm +/- 3.3%
100°C	212°F	3.264 Kohm +/- 4.6%

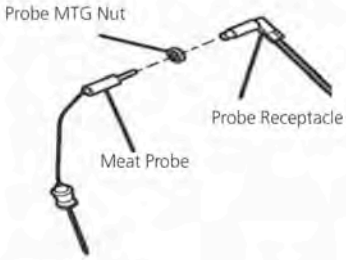

OVEN DOOR REMOVAL AND REPLACEMENT

To Remove and Replace Oven Door

1. Open the door to the fully opened position.
2. Pull up the lock located on each hinge support toward front of range. You may have to apply a little upward pressure on the lock to pull it up.
3. Grasp the door by the sides, pull the bottom of the door up and toward you to disengage the hinge supports. Keep pulling the bottom of the door toward you while rotating the top of the door toward the appliance to completely disengage the hinge levers.
4. Proceed in reverse to re-install the door. Make sure the hinge supports are fully engaged before unlocking

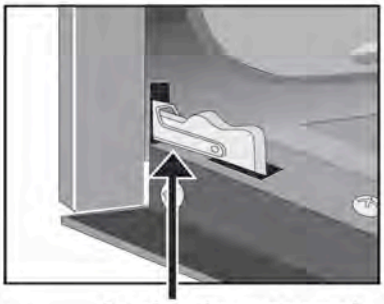

Lock in normal position

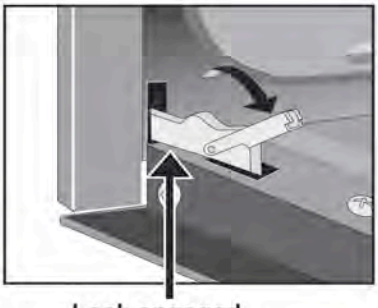

Lock engaged for door removal

HINGE SLOT - Door removed from the appliance

EXPLODED VIEW OF CONVECTION SYSTEM

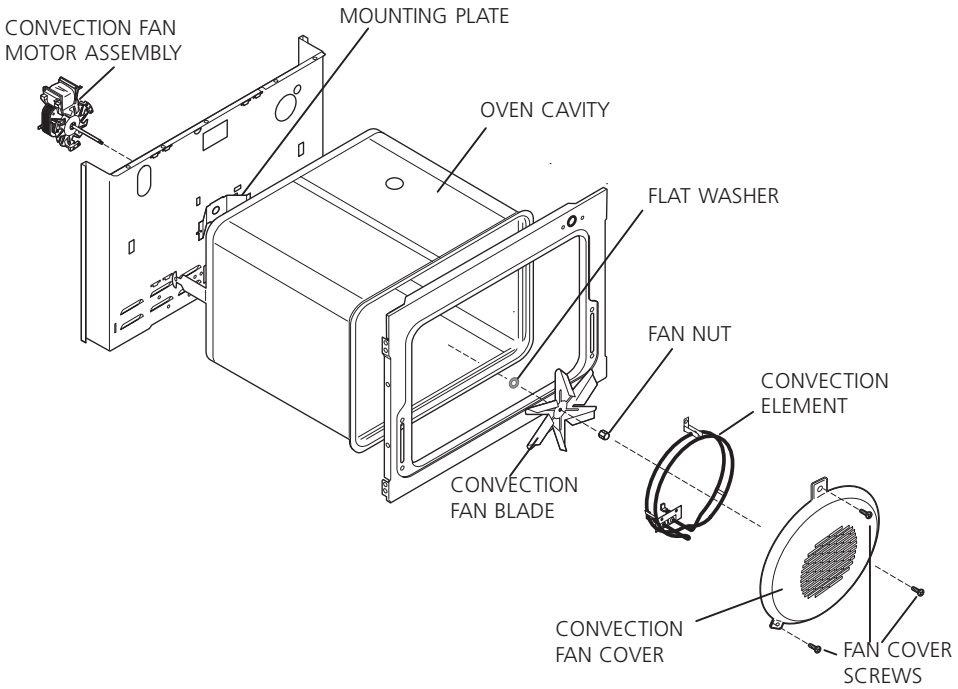

FAN BLADE

The fan blade is mounted in the rear of the unit and has a "D" shaped mounting hole. Only minimum clearance exists between the oven back, fan blade, and fan shroud. Be careful not to bend blade when removing or installing.

Access to the fan blade is gained by removing the fan shroud, held in place by three screws, from the inside of the oven.

The fan blade is held in place with a hex nut that has **left handed** threads. When removing this nut, gently hold the fan blade, and turn the nut clockwise. If one of the blades becomes deformed, it may be bent back into shape using a flat surface as a reference.

A flat washer is located on the motor shaft between the snap ring on the shaft and the fan blade.

NOTE: If the fan blade is bent and motor vibrations increase, the noise made by the fan will be greater.

MOUNTING PLATE OVEN

The fan motor on the rear of the unit is mounted to the main back (with three screws). There is a mounting plate held in place between the main back (with 2 screws) and the rear oven wall (with 2 screws). Should it be necessary to replace the oven cavity, you must remove the 2 screws located inside the unit at the rear of the oven cavity.

COOLING FAN MOTOR

The 120 volt fan motor is located on the outside of the rear of the oven. The cooling fan has 2 speed options, which are driven by the oven controller. The high speed mode is used on self-clean when the temperature gets over 575F. The high speed is also used anytime the broil function is used. The cooling fan may remain at high speed after the broil function is cancelled to allow better cooling of the oven. On double wall ovens, the blower in both ovens will start when using one of the ovens in self-clean mode.

TRUE HIDDEN BAKE ELEMENT REMOVAL

Follow the steps below in order to replace the true hidden bake element on a single wall oven and the lower true hidden back element of a double wall oven.

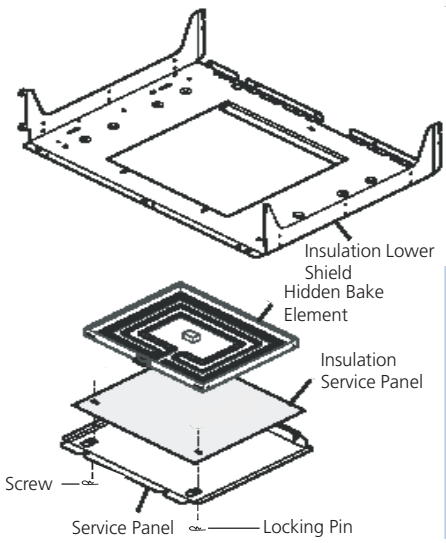

1. Remove the lower decorative trim (2 screws).
2. Using a pair of long nose pliers, remove the cutter pins and the screw which are holding the true hidden bake element service panel in place (under the oven liner).
3. Disconnect the two bake element wires.
4. Slide the true hidden bake service panel and element out of its operational emplacement.

   The steps below are to follow in order to replace a double wall oven's upper true hidden bake element only.

5. Remove the center trim. You may use a flat screwdriver in order to pull the center trim out.
6. Remove the door lock assembly.
7. Follow the same steps as for the single wall oven (2-4 above).

DOOR LOCK MECHANISM

The appliance is equipped with an electronic oven control and has an auto locking door latch feature. When the self clean cycle is programmed, the door is locked by a motor operated latch system. The interior of oven doesn't need to heat up to 500°F/260°C before the door locks. However, until the temperature inside oven reaches 500°F/260°C, the self-clean program can be canceled and door will unlock immediately. After oven reaches temperatures over 500°F/260°C, the door will not unlock until temperature drops below 500°F/260°C.

If a problem appears and the door stays locked it is possible for the **servicer** to unlock the door without removing the appliance from its place. Follow the steps below:

1. Trip the circuit breaker to **OFF** position.
2. Remove the 2 screws, which are fixing the oven door latch, located between the control panel and the oven door.
3. When the screws are removed it is possible to unlock the latch with a flat screwdriver, or one of the tools supplied with the wall oven which are used to take off the oven from the cabinet. Insert the tool tip through the slot on top of the oven door. During this step it's important to take care to not damage the appliance.
4. As soon as the latch is in the unlock position, you can open the door.
5. Replace the motor latch:

   Upper Oven:
   1. To have access to the door latch assembly, remove the 3 screws under the control panel which are fixing it.
   2. Remove the electronic plate located on the access plate.
   3. Remove the access plate located on the upper air channel by removing the screw.
   4. Replace the motor latch with a new one and reassemble in opposite order and manner of removal.

   Lower Oven:
   1. Pull out the appliance approximately 4" from the cabinet.
   2. Remove the 4 screws which are fixing the center trim and remove the center trim by pulling it from both extremities.
   3. Replace the motor latch by a new one and reassemble in opposite order and manner of removal.

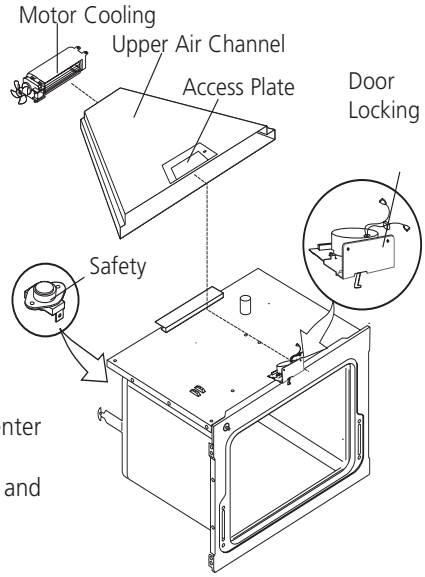

OVEN LIGHTS

This applicance is equipped with electronics that control the intensity of the oven lights. This is done with the Convection Fan and Oven Lights Control Board that modulates the AC voltage going to the 120V halogen lamps. When the light key is pressed or when the oven door is opened the display board communicates with the Convection Fan and Oven Lights Control Board to specify the required light intensity. The Convection Fan and Oven Lights Control Board also add a "theater-like" effect on the light: the light intensity is gradually ramp-up or ramp-down as the light is turned on or off.

On a double wall oven there are two Convection Fan and Oven Lights Control Boards, one for each cavity. The upper and lower cavity lights will turn ON and OFF at the same time. That is, if the light key is pressed, the light of both ovens will turn ON.

If the oven lights do not operate, check the following:
- If you are getting an F23 or F24 error code it means the display board is not able to communicate with the Convection Fan and Oven Lights Control Board, thus the oven light will not operate. Check connections between the display board and the Convection Fan and Oven Lights Control Board. Refer to the fault code section for corrective actions.
- If the lights are always ON (even with the door closed), it could be because the control mistakenly thinks the door is opened. Verify door switch and its wiring.
- Check connections on the Convection Fan and Oven Lights Control Board. On connector P2: pin 3 should be Neutral, pin 5 should be L1 (120VAC) and pin 1 should go to the oven lights. The other terminal of the light should be connected to Neutral.
- Verify is light bulbs need to be replaced.
- If there is no error code, the wiring is good and still the oven lights are not working then replace the Convection Fan and Oven Lights Control Board.

BLOCK DIAGRAM AND SYSTEM INTERCONNECTIONS

Block Diagram and System Interconnections

Double wall oven is illustrated. For single oven simply omit lower oven components and connections.

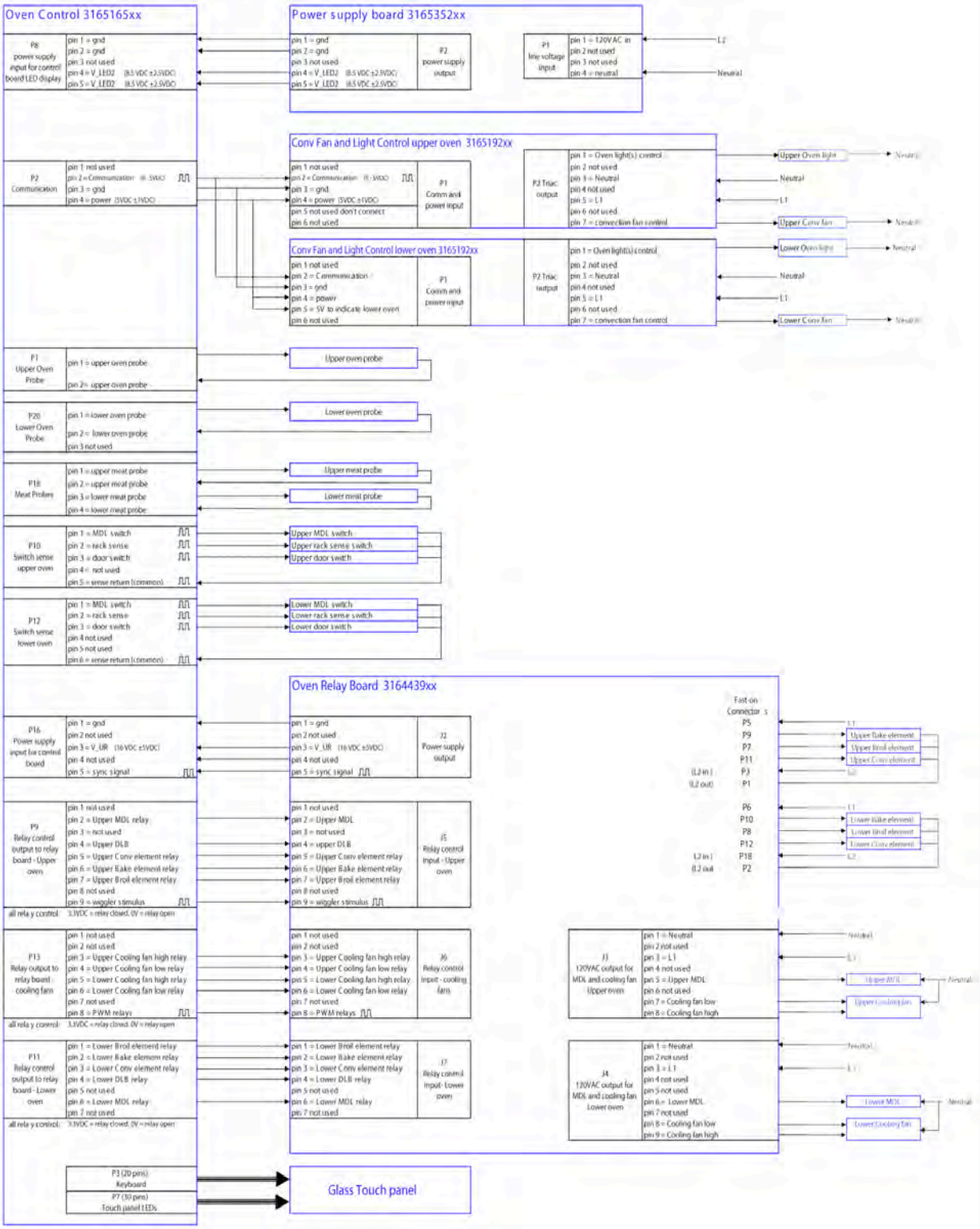

Electrolux

ELECTRIC BUILT-IN RANGE PRODUCT TRAINING SECTION

MODELS - EW30ES65G , EW30DS65G

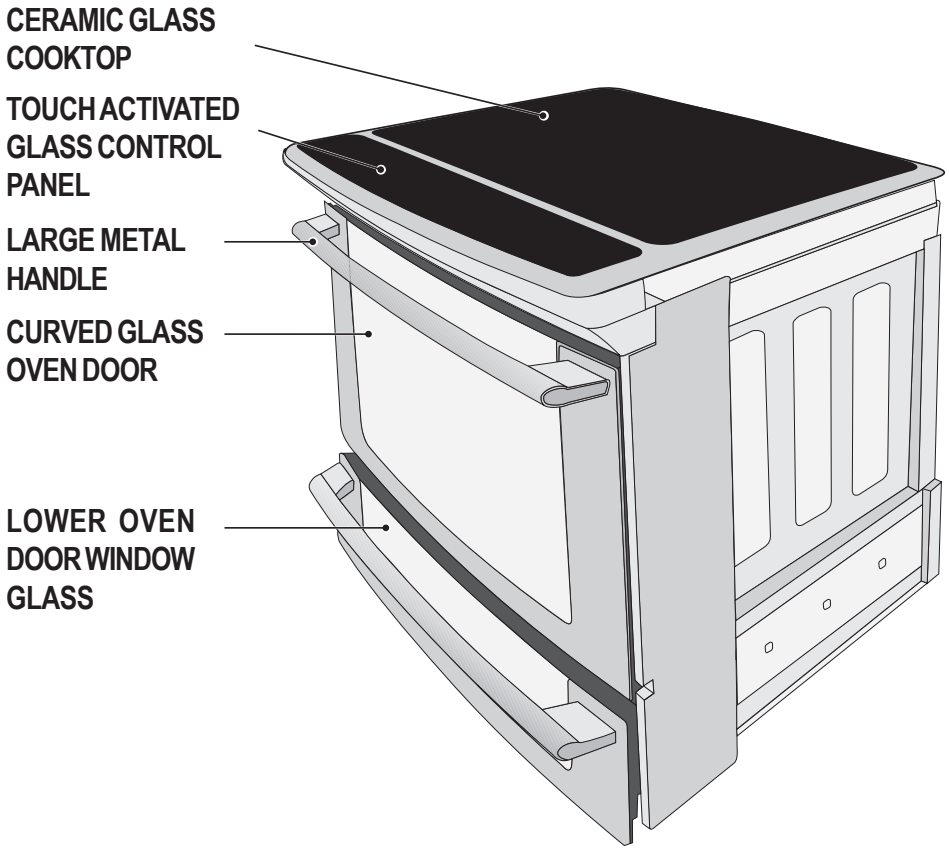
CERAMIC GLASS COOKTOP
TOUCH ACTIVATED GLASS CONTROL PANEL
LARGE METAL HANDLE
CURVED GLASS OVEN DOOR
LOWER OVEN DOOR WINDOW GLASS

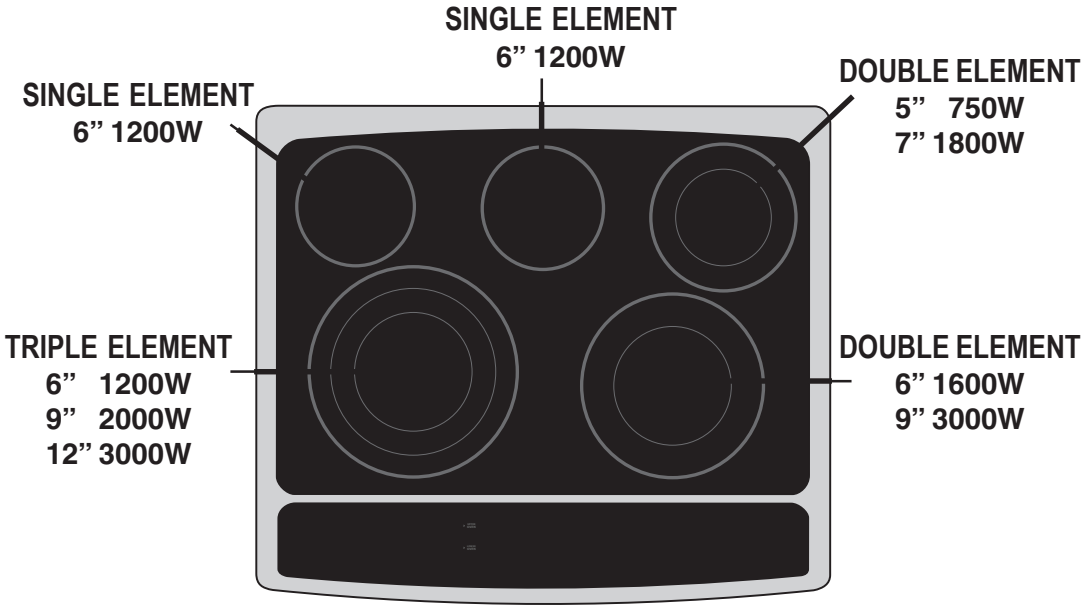
SINGLE ELEMENT
6” 1200W
SINGLE ELEMENT
6” 1200W
DOUBLE ELEMENT
5” 750W
7” 1800W
TRIPLE ELEMENT
6” 1200W
9” 2000W
12” 3000W
DOUBLE ELEMENT
6” 1600W
9” 3000W

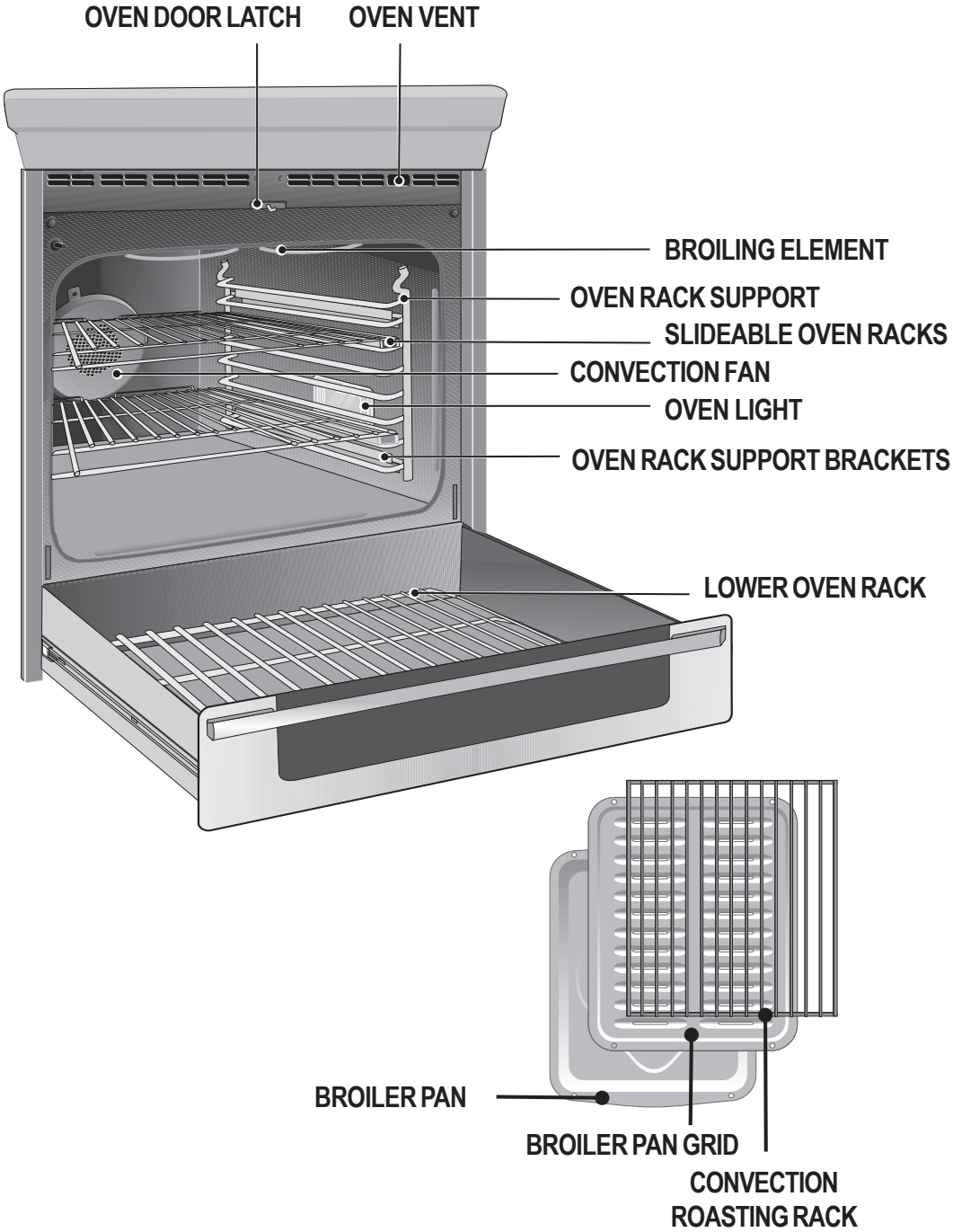
OVEN DOOR LATCH
OVEN VENT
BROILING ELEMENT
OVEN RACK SUPPORT
SLIDEABLE OVEN RACKS
CONVECTION FAN
OVEN LIGHT
OVEN RACK SUPPORT BRACKETS
LOWER OVEN RACK
BROILER PAN
BROILER PAN GRID
CONVECTION
ROASTING RACK

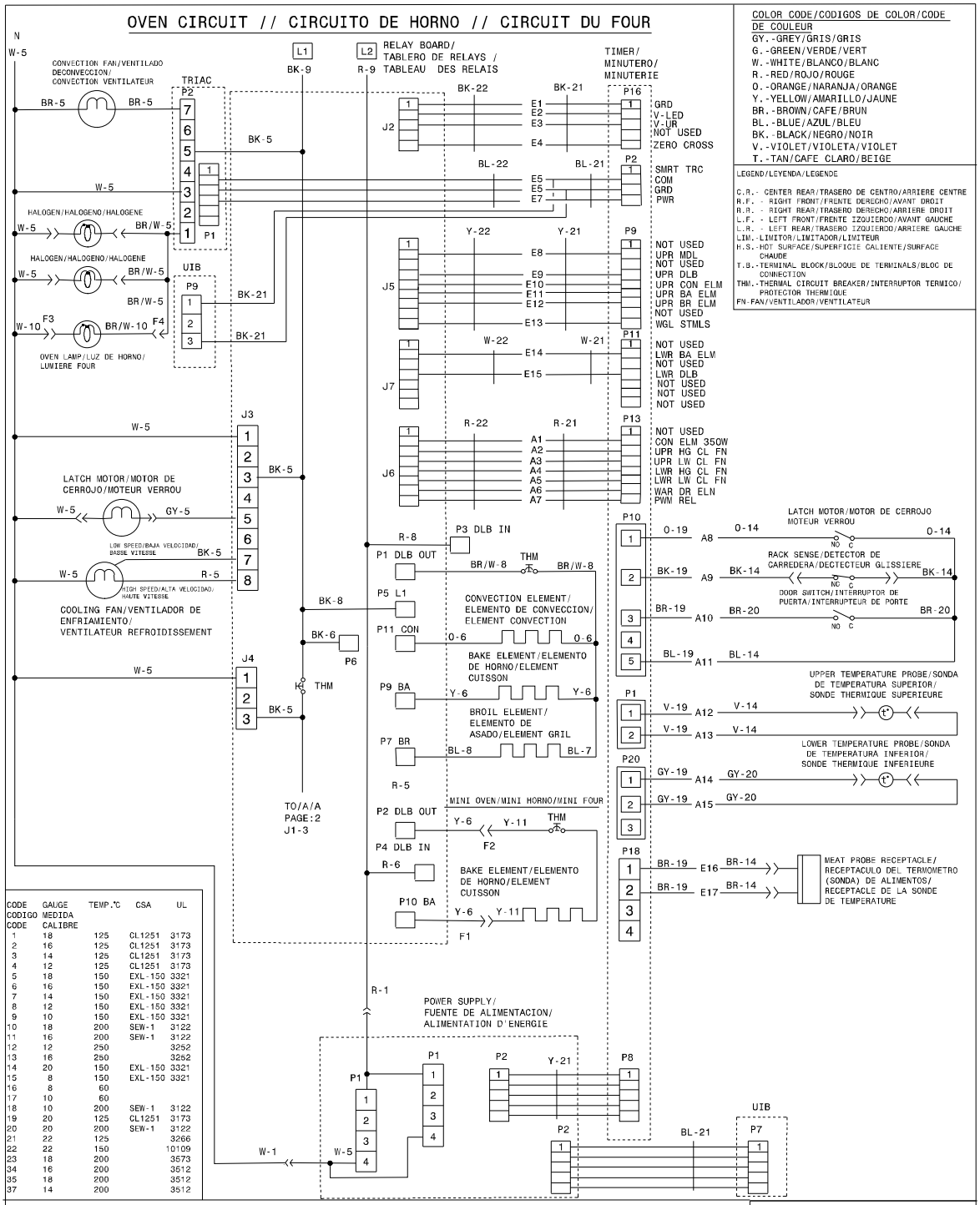
OVEN CIRCUIT // CIRCUITO DE HORNO // CIRCUIT DU FOUR
COLOR CODE/CODIGOS DE COLOR/CODE DE COULEUR
GY.-GREY/GRIS/GRIS
G.-GREEN/VERDE/VERT
W.-WHITE/BLANCO/BLANC
R.-RED/ROJO/ROUGE
O.-ORANGE/NARANJA/ORANGE
Y.-YELLOW/AMARILLO/JAUNE
BR.-BROWN/CAFE/BRUN
BL.-BLUE/AZUL/BLEU
BK.-BLACK/NEGRO/NOIR
V.-VIOLET/VIOLETA/VIOLET
T.-TAN/CAFE CLARO/BEIGE
LEGEND/LEYENDA/LEGENDE
C.R.- CENTER REAR/TRASERO DE CENTRO/ARRIERE CENTRE
R.F. - RIGHT FRONT/FRENTE DERECHO/AVANT DROIT
R.R. - RIGHT REAR/TRASERO DERECHO/ARRIERE DROIT
L.F. - LEFT FRONT/FRENTE IZQUIERDO/AVANT GAUCHE
L.R. - LEFT REAR/TRASERO IZQUIERDO/ARRIERE GAUCHE
LIM.-LIMITOR/LIMITADOR/LIMITEUR
H.S.-HOT SURFACE/SUPERFICIE CALIENTE/SURFACE CHAUDE
T.B.-TERMINAL BLOCK/BLOQUE DE TERMINALS/BLOC DE CONNECTION
THM.-THERMAL CIRCUIT BREAKER/INTERRUPTOR TERMICO/PROTECTOR THERMIQUE
FN-FAN/VENTILADOR/VENTILATEUR
CONVECTION FAN/VENTILADO DECONVECCION/CONVECTION VENTILATEUR
TRIAC
RELAY BOARD/TABLERO DE RELAYS / TABLEAU DES RELAIS
TIMER/MINUTERO/MINUTERIE
GRD
V-LED
V-UR
NOT USED
ZERO CROSS
SMRT TRC
COM
GRD
PWR
HALOGEN/HALOGENO/HALOGENE
UIB
OVEN LAMP/LUZ DE HORNO/LUMIERE FOUR
LATCH MOTOR/MOTOR DE CERROJO/MOTEUR VERROU
LOW SPEED/BAJA VELOCIDAD/BASSE VITESSE
HIGH SPEED/ALTA VELOCIDAD/HAUTE VITESSE
COOLING FAN/VENTILADOR DE ENFRIAMIENTO/VENTILATEUR REFROIDISSEMENT
NOT USED
UPR MDL
UPR DLB
UPR CON ELM
UPR BA ELM
UPR BR ELM
WGL STMLS
LWR BA ELM
LWR DLB
CON ELM 350W
UPR HG CL FN
UPR LW CL FN
LWR HG CL FN
LWR LW CL FN
WAR DR ELN
PWM REL
P3 DLB IN
P1 DLB OUT
P5 L1
P11 CON
P9 BA
P7 BR
P2 DLB OUT
P4 DLB IN
P10 BA
CONVECTION ELEMENT/ELEMENTO DE CONVECCION/ELEMENT CONVECTION
BAKE ELEMENT/ELEMENTO DE HORNO/ELEMENT CUISSON
BROIL ELEMENT/ELEMENTO DE ASADO/ELEMENT GRIL
MINI OVEN/MINI HORNO/MINI FOUR
BAKE ELEMENT/ELEMENTO DE HORNO/ELEMENT CUISSON
TO/A/A PAGE:2 J1-3
LATCH MOTOR/MOTOR DE CERROJO MOTEUR VERROU
RACK SENSE/DETECTOR DE CARREDERA/DECTECTEUR GLISSIERE
DOOR SWITCH/INTERRUPTOR DE PUERTA/INTERRUPTEUR DE PORTE
UPPER TEMPERATURE PROBE/SONDA DE TEMPERATURA SUPERIOR/SONDE THERMIQUE SUPERIEURE
LOWER TEMPERATURE PROBE/SONDA DE TEMPERATURA INFERIOR/SONDE THERMIQUE INFERIEURE
MEAT PROBE RECEPTACLE/RECEPTACULO DEL TERMOMETRO (SONDA) DE ALIMENTOS/RECEPTACLE DE LA SONDE DE TEMPERATURE
POWER SUPPLY/FUENTE DE ALIMENTACION/ALIMENTATION D'ENERGIE
CODE CODIGO CODE | GAUGE MEDIDA CALIBRE | TEMP.°C | CSA | UL
1 18 125 CL1251 3173
2 16 125 CL1251 3173
3 14 125 CL1251 3173
4 12 125 CL1251 3173
5 18 150 EXL-150 3321
6 16 150 EXL-150 3321
7 14 150 EXL-150 3321
8 12 150 EXL-150 3321
9 10 150 EXL-150 3321
10 18 200 SEW-1 3122
11 16 200 SEW-1 3122
12 12 250 3252
13 16 250 3252
14 20 150 EXL-150 3321
15 8 150 EXL-150 3321
16 8 60
17 10 60
18 10 200 SEW-1 3122
19 20 125 CL1251 3173
20 20 200 SEW-1 3122
21 22 125 3266
22 22 150 10109
23 18 200 3573
34 16 200 3512
35 18 200 3512
37 14 200 3512
CAUTION: DISCONNECT POWER BEFORE SERVICING UNIT.
ATENCION:CORTAR LA CORIENTE ANTES DE REALIZAR ELMANTENIMIENTO DEL ELECTRODOMESTICO.
ATTENTION:COUPEZ L`ALIMENTATION AVANT D`EFFECTUER LA REPARATION.
318271995 REV:C
PAGE:1/2

Wiring Diagram

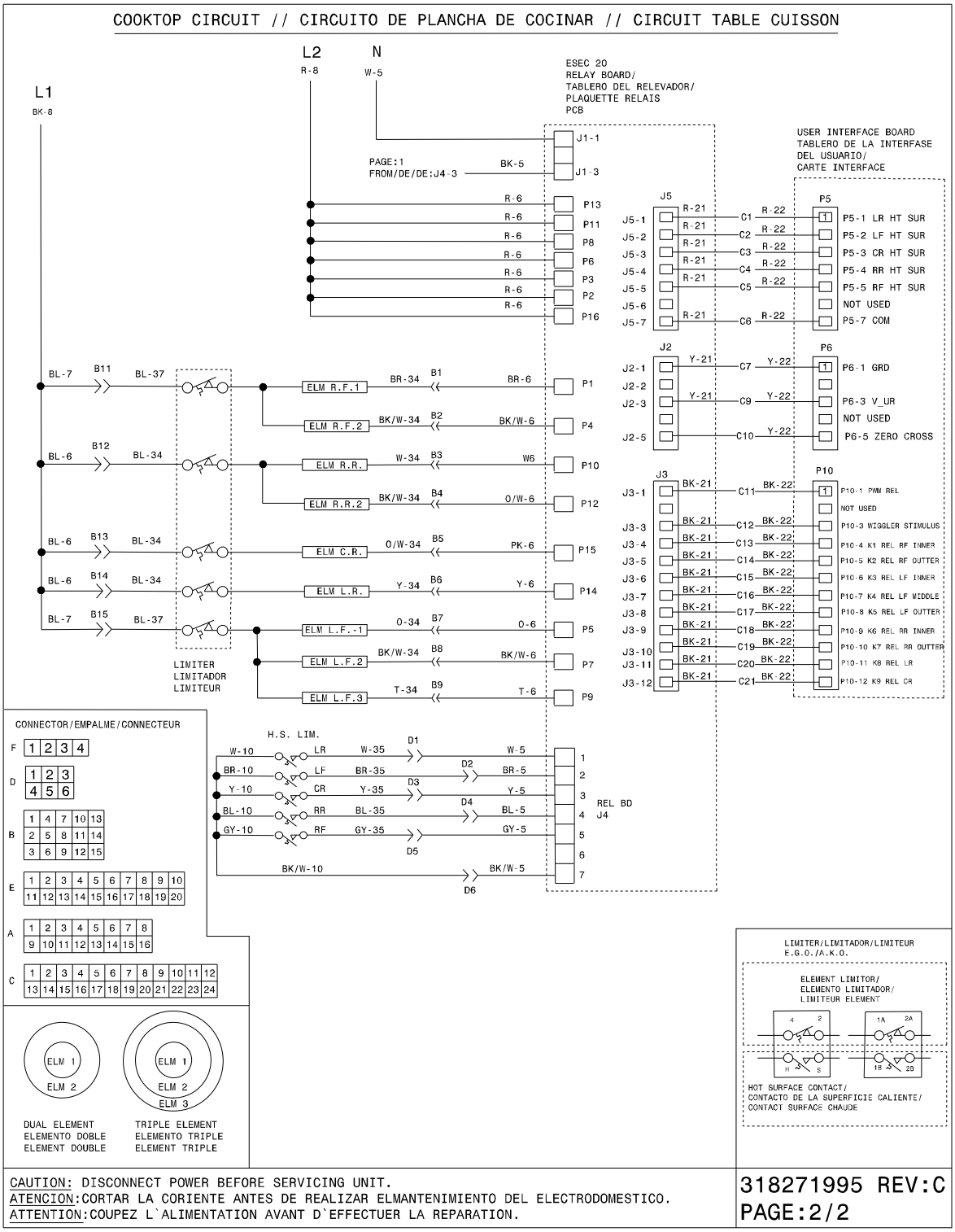

OVEN CONTROL PAD FUNCTIONS

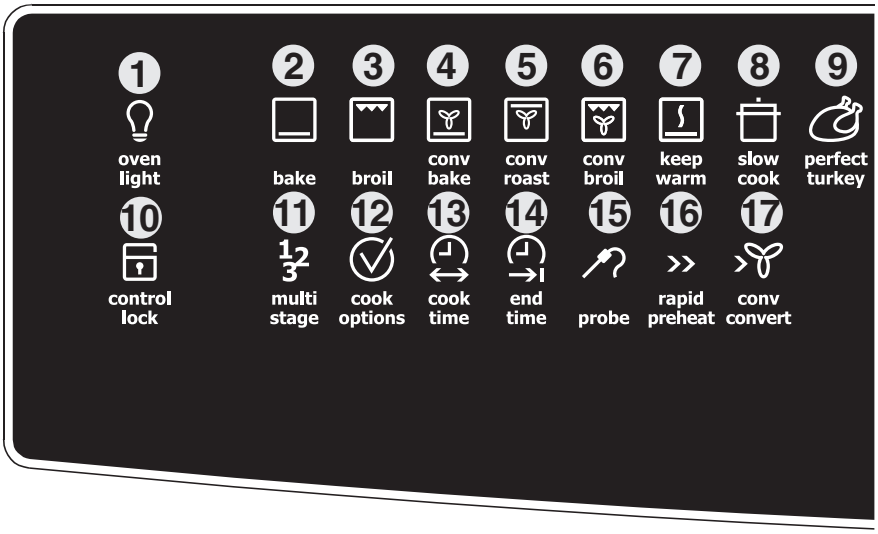

1 **Light Pad**- Used to turn the oven light on and off.

2 **Bake Pad**- Used to enter the normal baking mode temperature.

3 **Broil Pad**- Used to select the variable broil mode.

4 **Convection Bake Pad**- Used to select the convection baking mode.

5 **Convection Roast Pad**- Used to select the convection roasting mode.

6 **Convection Broil Pad**- Used to select the convection broil mode.

7 **Keep Warm Pad**- Used to select the keep warm mode.

8 **Slow Cook Pad**- Used to select the slow cook mode.

9 **Perfect Turkey Pad**- Used to select the perfect turkey cooking mode.

10 **Control Lock Pad**- Used to disable all oven function.

11 **Multi Stage Pad**- Used to enter up to three subsequent modes.

12 **Cook Options Pad**- Used to light up the cooking options pads.

13 **Cook Time Pad**- Used to set a cooking duration time.

14 **End Time Pad**- Used to select the time at which the cooking will end.

15 **Probe Pad**- Used to activate the meat probe mode.

16 **Rapid Preheat Pad**- Used to preheat the oven to the desired temperature.

17 **Conv. Convert Pad**- Used to convert a standard temperature to a convection temperature.

COOKTOP CONTROL PAD FUNCTIONS

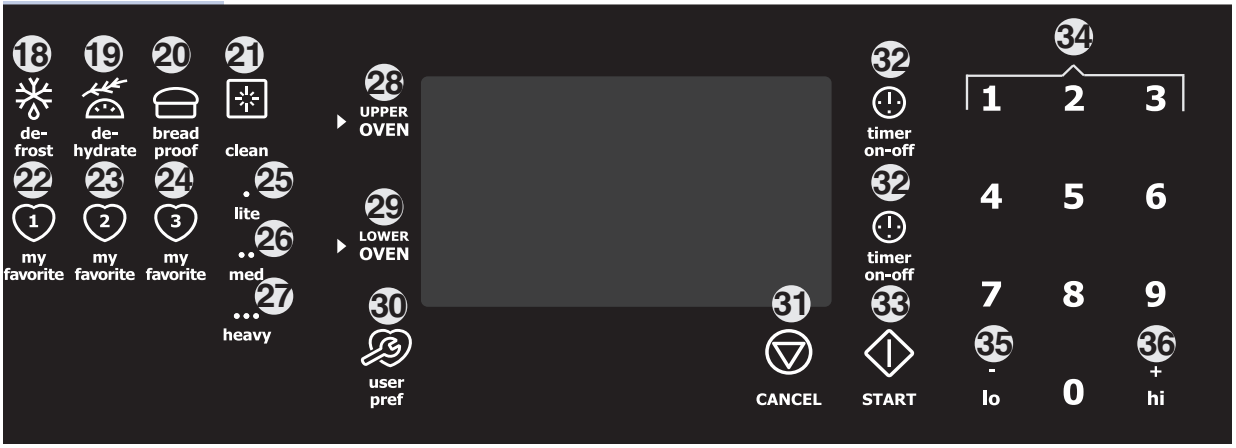

18 **Defrost Pad**- Used to select the defrost mode.

19 **Dehydrate Pad**- Used to select the dehydrate mode.

20 **Bread Proof Pad**- Used to select the bread proof mode.

21 **Clean Pad**- Used to select the self-cleaning mode.

22 **My Favorite 1 Pad**- Used to save or recall the favorite 1 cooking mode.

23 **My Favorite 2 Pad**- Used to save or recall the favorite 2 cooking mode.

24 **My Favorite 3 Pad**- Used to save or recall the favorite 3 cooking mode.

25 **Lite Pad**- Used to start a 2 hours self-clean cycle.

26 **Med Pad**- Used to start a 3 hours self-clean cycle.

27 **Heavy Pad**- Used to start a 4 hours self-clean cycle.

28 **Upper Oven Pad**- Used to activate the upper oven for cooking operation.

29 **Lower Oven Pad**- Used to activate the lower oven for cooking operation.

30 **User Preference Pad**- Used to bring the user preference menu in the display.

31 **Cancel Pad**- Used to cancel any function previously entered except the time of day and minute timer. Push **Cancel pad** to stop cooking.

32 **Timer Pads**- Used to set or cancel the minute timer. The minute timer does not start or stop cooking.

33 **Start Pad**- Used to start all oven functions.

34 **0 Through 9 Number Pads**- Used to enter temperature and times.

35 **- lo Pad**- Used to lower the temperature and times.

36 **+ hi Pad**- Used to raise the temperature and times.

COOKTOP CONTROL PAD FUNCTIONS

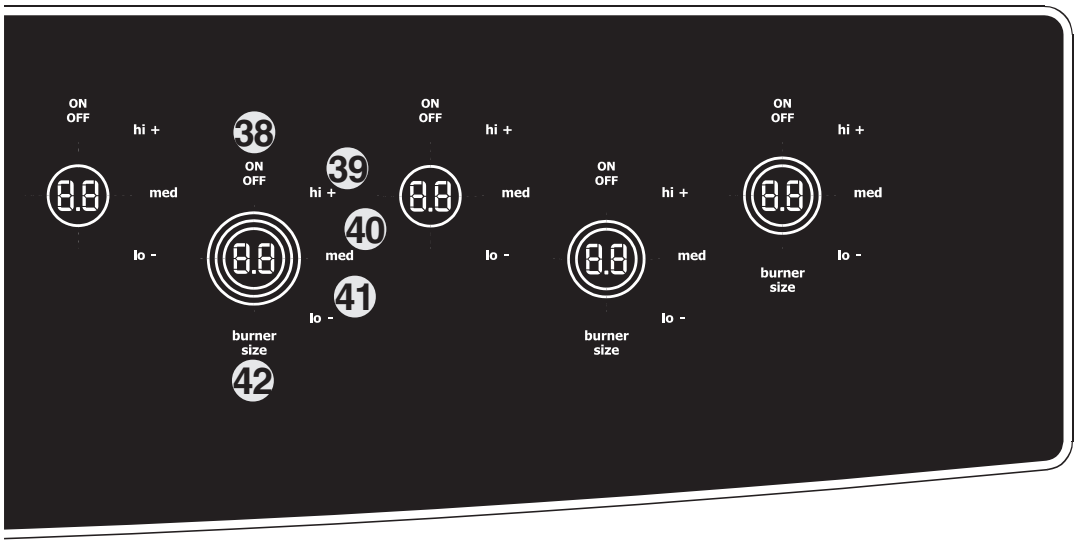

38 **ON / OFF Pad**- Used to toggle ON and OFF the associated surface element.

39 **HI + Pad**- Used to select the highest element temperature or raise the temperature currently displayed.

40 **MED Pad**- Used to select the medium element temperature.

41 **LO -** - Used to select the lower element temperature or lower the temperature currently displayed.

42 **Burner Size Pad**- Used to toggle between the available surface element burner sizes.

BAKING

This mode is best used for your standard recipes. The hidden bake element is used to heat the air and maintain temperature. The temperature probe can be used in this cooking mode. The upper oven can be programmed to bake at any temperature from 170°F to 550°F with a default temperature of 350°F. The lower oven can be programmed to bake at any temperature from 170°F to 450°F with a default temperature of 350°F.

Upper Oven Baking Tips:

- Always preheat your oven before using the bake mode.
- During preheat, the 3 elements and the convection fan are used in cycle to quickly heat the oven.
- Use only one rack and center the pans as much as possible.
- If using two racks, place the oven racks in positions 2 and 6.
- Allow 2” to 4” (5,1 to 10,2 cm) around the utensil(s) for proper air circulation.
- Be sure the pans do not touch each other, the door, sides or back of the oven.

If using multiple pans or racks, stagger as shown.

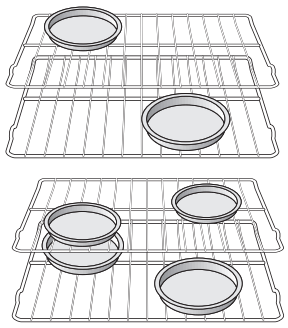

Lower Oven Baking Tips:

- Follow recommendations for lower oven cooking modes in the **Lower Oven Operation** section of this manual.

To set a Bake Temperature of 350°F:

1. Arrange interior oven racks.
2. Select oven by pressing **UPPER OVEN** UPPER OVEN or **LOWER OVEN** LOWER OVEN.
3. Press **BAKE**.
4. Press **START**. The oven display shows **PRE-HEATING**.
5. Place food in the oven when the chime signals and temperature display shows that the oven has reached the set target temperature and the **PRE-HEATING** message disappear.
6. Cook Time, Timer and End Time features can be set to control your cooking time in both ovens (read their sections for directions). The Temperature Probe and Rapid Preheat features can be used only with the upper oven.
7. Remove food. Always use oven mitts when removing hot pans from the oven.
8. Press **CANCEL** to stop or cancel the Bake feature at any time.

To change to a Bake Temperature of 425°F:

1. Select oven by pressing **UPPER OVEN** UPPER OVEN or **LOWER OVEN** LOWER OVEN.
2. Press the **HI** + hi or **LO** - lo pads to get to the desired temperature.
3. Press **START**.

Baking Problems

Refer to the Baking Problems Table in the Solutions to Common Problems section of this manual.

SABBATH FEATURE (FOR USE ON THE JEWISH SABBATH & HOLIDAYS)

The **HI** $^{+}_{hi}$ and **LO** $^{-}_{lo}$ pads are used to set the Sabbath feature. The Sabbath feature may only be used with the **BAKE** pad. The oven temperature may be set higher or lower after setting the Sabbath feature (the oven temperature adjustment feature should be used only during Jewish Holidays), however the display will not visibly show or provide any audible tones indicating whether the change occurred correctly. Once the oven is properly set using Bake with the Sabbath feature active, the oven will remain continuously ON until cancelled. This will override the factory preset 12-Hour Energy Saving feature.

If the oven light will be needed during the Sabbath, press **OVEN LIGHT** before activating the Sabbath feature. Once the oven light is turned ON and the Sabbath feature is active, the oven light will remain ON until the Sabbath feature is turned OFF. If the oven light needs to be OFF, be sure to turn the oven light OFF before activating the Sabbath feature.

IMPORTANT NOTES: It is not advised to attempt to activate any other program feature other than **BAKE** while the Sabbath feature is active. ONLY the following key pads will function after setting the Sabbath feature; 0 to 9, **BAKE**, **START**, **CANCEL**, **HI** $^{+}_{hi}$ and **LO** $^{-}_{lo}$. **ALL OTHER KEYPADS** will not function once the Sabbath feature is properly activated.

To Program the Upper Oven to Begin Baking Immediately & Activate the Sabbath feature (example: baking at 350°F)

1. Place the food in the oven.
2. Select oven by pressing either **UPPER OVEN** UPPER OVEN or **LOWER OVEN** LOWER OVEN.
3. Press **BAKE**.
4. If you desire to set the oven control for a **COOK TIME** do so at this time. If not, skip this step and continue to step 5. Refer to their section for complete instructions. Remember the oven will shut down after using **COOK TIME** and therefore may only be used once during the Sabbath/Jewish Holidays.
5. Press **START**.
6. The oven will turn ON and begin heating immediately.
7. Press and hold both the **HI** $^{+}_{hi}$ and **LO** $^{-}_{lo}$ pads for at least 3 seconds. **SAb** will appear in the oven display and **Sb** in the cooktop displays. Once SAb appears in the display the oven control will no longer beep or display any further changes and the oven is properly set for the Sabbath feature.

Note: You may change the oven temperature once baking has started. Press **UPPER OVEN** UPPER OVEN, **BAKE**, the numeric key pads for the temperature you want (example for 425°F press 4, 2, 5) and then press **START** **TWICE** (for Jewish Holidays only). Remember that **the oven control will no longer beep or display any further changes** once the oven is set for the Sabbath feature.

8. The oven may be turned OFF at any time by pressing **CANCEL** pad (this will turn the oven OFF only). To turn OFF the Sabbath feature press and hold both the **HI** $^{+}_{hi}$ and **LO** $^{-}_{lo}$ pads for at least 3 seconds. **SAb** will disappear from the display.

SABBATH FEATURE (CONTINUED)

Should you experience a power failure or interruption, the oven will shut off. When power is returned the oven will not turn back on automatically. **SF** (Sabbath Failure) will be displayed in the oven control display and the surface element displays. The oven will remember that it is set for the Sabbath and the food may be safely removed from the oven while still in the Sabbath feature, however the oven cannot be turned back on until after the Sabbath. After the Sabbath observance turn OFF the Sabbath feature. Press and hold both the **HI** $^{+}_{hi}$ and **LO** $^{-}_{lo}$ pads for at least 3 seconds. **SAb** will disappear from the display and the oven may be used with all normal functions. For further assistance, guidelines for proper usage, and a complete list of models with the Sabbath feature, please visit the web at **http:\\www.star-k.org.**

Notes for the use of the cooktop in Sabbath mode:

- When the Sabbath feature is enabled on the oven control, it is also enabled on the cooktop. To activate the Sabbath feature, it is not necessary to have one burner ON, but it is necessary to have a Bake function active in the oven.
- When the Sabbath feature is enabled, a surface element can be turned ON by pressing the ON/OFF pad. The element will turn ON 15 to 30 seconds after the ON/OFF pad was pressed.
- When the Sabbath feature is enabled, the power level of an active element can be changed. The change will take effect after a 15 to 30 seconds delay. The element size (inner/outer) CANNOT be changed.
- All surface element displays will show "**Sb**" regardless of if the element is ON or OFF. All red rings will be illuminated, regardless of the burner size.

ELECTRONIC OVEN CONTROL

1. This self-cleaning controller offers Bake, Broil, Convection Bake, Convection Roasting and Convection Broil modes, Dehydrating, Defrosting, Temperature Probe, Perfect Turkey, Bread Proof, Keep Warm and Cleaning functions.
2. Convection operates with an element and a fan dedicated to convection.
3. This controller includes a display board, a relay board, and a convection fan and oven light control board.

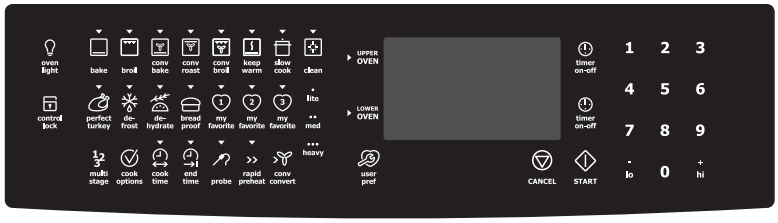

NOTE: The controllers are not field repairable. Only temperature settings can be changed. See oven calibration.

ELECTRONIC OVEN CONTROL RELAY BOARD

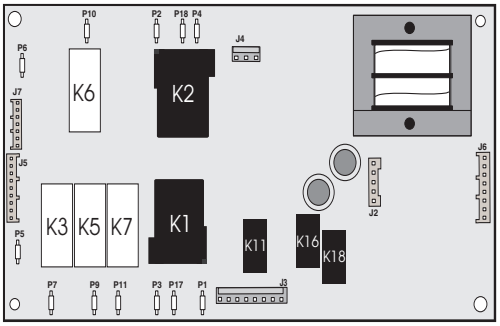

This relay board serves to energize the upper and lower oven heating elements, door lock motor and cooling fan.

J2 - DC Power Output To Display Board
J3 - AC Power Output (motor door latch, cooling fan) For Upper Oven
J4 - Power Input (L1, Neutral)
J5 - Relay Control Inputs (bake, broil and convection elements, motor door latch, DLB) For Upper Oven
J6 - Relay Control Inputs (cooling fan) For Upper Oven
J7 - Relay Control Inputs (bake element and DLB) For Lower Oven

Relay Board Legend:

K1. Double Line Break - Upper Oven
K2. Double Line Break - Lower Oven
K3. Broil Relay - Upper Oven
K5. Bake Relay - Upper Oven
K6. Bake Relay - Lower Oven
K7. Convection Element Relay - Upper Oven
K11. Motor Door Latch - Upper Oven
K16. Cooling Fan Relay Low Speed - Upper Oven
K18. Cooling Fan Relay High Speed - Upper Oven

P1 - L2 Out, Upper Oven
P2 - L2 Out, Lower Oven
P3 - L2 In, Upper Oven
P4 & P17 - Not Used
P5 - L1, Upper Oven
P6 - L1, Lower Oven
P7 - Broil, Upper Oven
P9 - Bake, Upper Oven
P10 - Bake, Lower Oven
P11 - Convection Element, Upper Oven
P18 - L2 In, Lower Oven

ELECTRONIC SURFACE ELEMENT CONTROL (ESEC)

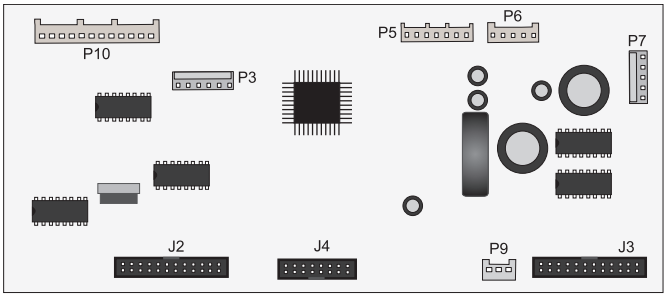

User Interface Board (UIB)

User Interface Board (UIB) Legend:

J2. Connector for Touch Panel LEDs and Display Indicators
J3. Connector for Touch Panel LEDs and Display Indicators
J4. Connector for Keyboard (Touch Panel)
P3. Micro Programming Header (Not Used)
P5. Connector for the hot element indicators from Relay Board
P6. Power Supply Input (from relay board)
P7. Power Supply Input (from power supply board for touch panel LEDs)
P9. Communication with Oven Control
P10. Surface Elements Relay Controls

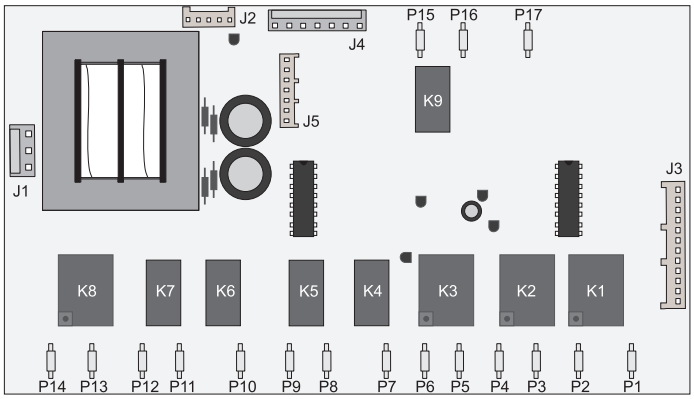

ESEC Relay Board

ESEC Relay Board Legend:

P1. Right Front Inner Element Connection
P2. Line In (120V AC)
P3. Line In (120V AC)
P4. Right Front Outer Element Connection
P5. Left Front Inner Element Connection
P6. Line In (120V AC)
P7. Left Front Middle Element Connection
P8. Line In (120V AC)
P9. Left Front Outer Element Connection
P10. Right Rear Element Connection
P11. Line In (120V AC)
P12. Right Rear Outer Element Connection
P13. Line In (120V AC)
P14. Left Rear Element Connection
P15. Center Rear Element Cnonection
P16. Line In (120V AC)
P17. Not Used

K1. Right Front Inner Element Relay
K2. Right Front Outer Element Relay
K3. Left Front Inner Element Relay
K4. Left Front Middle Element Relay
K5. Left Front Outer Element Relay
K6. Right Rear Inner Element Relay
K7. Right Rear Outer Element Relay
K8. Left Rear Element Relay
K9. Center Rear Element Relay

J1. Line Voltage Input (120V, Neutral)
J2. Low Voltage Supply Output For UIB
J3. Surface Element Relay Control Inputs
J4. Surface Element Hot Signal Inputs
J5. Hot Element Signals to UIB

ELECTRONIC CONTROL DISPLAY BOARD

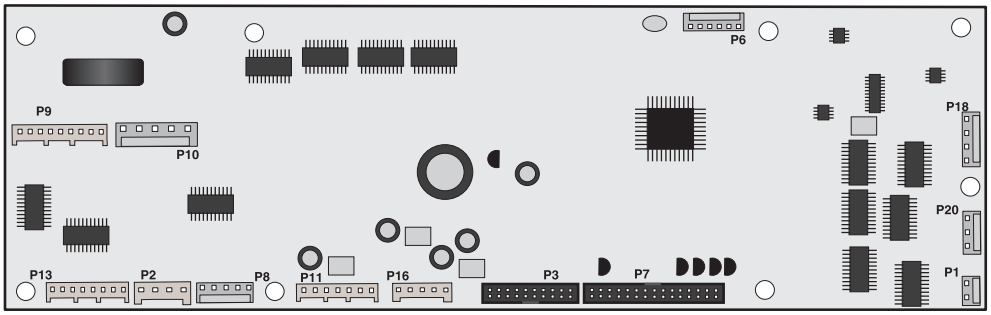

Electronic oven display board for electric ranges

Connector Legend:

P1 - Upper Oven Probe Input
P2 - Communication with Convection Fan and Oven Light Control Board, Communication with ESEC30 UIB (electric only)
P3 - Keyboard (touch panel)
P6 - Microprocessor Programming (not used)
P7 - Touch Panel LEDs
P8 - Power Supply Input for Display LEDs
P9 - Relay Control Output (heating elements, DLB, motor door latch) for Upper Oven
P10 - Switches Input (motor door latch switch, door switch, rack switch) for Upper Oven
P11 - Relay Control Output (heating element, DLB) for Lower Oven
P13 - Relay Control Output (cooling fan)
P16 - DC Power Supply Input
P18 - Meat Probe Input
P20 - Lower Oven Probe Input

POWER SUPPLY BOARD

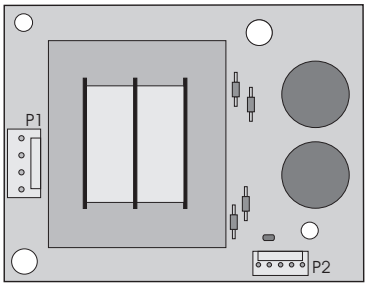

This board provides power to the oven control display.
P1 - AC Power Input (L2 and Neutral)

P2 - DC Power Output

CONVECTION FAN AND OVEN LIGHTS CONTROL BOARD

This board control the power output of the convection fan and oven lights.
P1 - Communication with display board and power supply input
P2 - AC power output for convection fan and oven lights, power inputs (L1, neutral)
P6 - Microprocessor programming (not used)

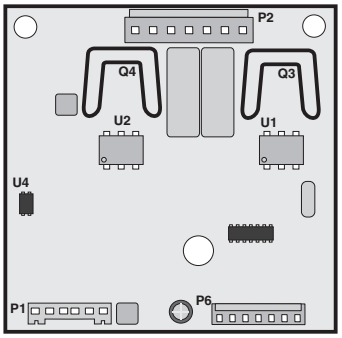

CONVECTION MODE

The convection oven uses the addition of a fan and an element to heat and to move the air already in the oven. Moving the heated air helps to destratify the heat and cause uniform heat distribution. The air is drawn in through a fan shroud and the element located on the rear wall of the oven. It is then discharged around the outer edges of this shroud. The air circulates around the food and then enters the shroud again. As with conventional electric wall ovens, there is still an oven vent which discharges above the door. In preheat of non-convection cooking modes, the convection fan will be operating until the oven has reached the target temperature.

To set the control in convection mode, follow these steps:

1. Select upper oven by pressing **UPPER OVEN** UPPER OVEN.
2. Press **CONVECTION BAKE** or **CONVECTION ROAST** or **CONVECTION BROIL** .
3. Press **START** . The oven will automatically start and the fan will begin to run.
4. Press **CANCEL** to stop or cancel the Convection feature at any time.

NOTE: The fan runs continuously while in the convection mode. The fan will stop if the door is opened while convection baking/roasting/broiling. The convection element will stop operating if the door is opened.
The speed of the convection fan will vary depending on which cooking function is used. Convection Roast uses a fast fan speed, while convection bake uses a slower fan speed.

CONVECTION FAN MOTOR

The 120V fan motor is located on the outside of the rear of the oven.

The fan motor runs continuously while in convection mode unless the door is opened.
It is normal to see the fan speed changing depending on the cooking function that is used. This appliance uses the optimum fan speed for each convection function.
It is the Convection Fan and Oven Lights Control Board that modulates the speed of the convection fan. It uses the fan speed information communicated by the display board.

If the fan does not operate, check the following:

- The oven control display will give you an indication on when the convection fan should be on: rotating fan blades in the display means the fan should be ON. No rotating blades mean the convection fan is purposely not used.
- Verify proper operation of the door switch. If the control thinks the door is opened the convection fan will not work. If the oven light turns on when the door is opened and turn off when the door is closed then it's a good indication the door switch is good.
- If you are getting an F23 error code it means the display board is not able to communicate with the Convection Fan and Oven Lights Control Board, thus the convection fan will not operate. Check connections between the display board and the Convection Fan and Oven Lights Control Board. Refer to the fault code section for corrective actions.
- Check connections on the Convection Fan and Oven Lights Control Board. On connector P2: pin 3 should be Neutral, pin 5 should be L1 (120VAC) and pin 7 should go to the convection fan motor. The other terminal of the convection fan motor should be connected to Neutral.
- Fan motor coil resistance should be 15.0 ohm +/- 10%
- When the fan is ON you should see between 20 and 120VAC on the motor, depending on the fan speed.
- If there is no error code, the wiring is good and the fan coil is good then replace the Convection Fan and Oven Lights Control Board.

OVEN CALIBRATION

Set the electronic oven control for normal baking at 350°F. Obtain an average oven temperature after a minimum of 5 cycles.
The oven calibration can be modified using the oven control display. Please refer to the Owner's Guide manual.
Note: Changing calibration affects all the cooking modes but not the clean and the broil modes.

FIRST RISE

It is normal to see a temperature overshoot in the first rise of all modes when you monitor the temperature.

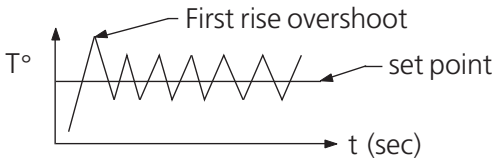

ELECTRONIC OVEN CONTROL (FAULT CODES)

ELECTRONIC OVEN CONTROL (EOC) FAULT CODE DESCRIPTIONS

Note: Generally speaking "F1X" implies a control failure, "F3X" an oven probe problem, and "F9X" a latch motor problem.

Failure Code/Condition/Cause	Suggested Corrective Action
F10 Control has sensed a potential runaway oven condition. Control may have shorted relay, RTD sensor probe may have a gone bad.	**1)** Check RTD sensor probe and replace if necessary. If oven is overheating, disconnect power. If oven continues to overheat when power is reapplied, replace relay board and/or display board.
F11 Shorted Key: a key has been detected as pressed for a long period and will be considered a shorted key alarm and will terminate all oven activity.	**1)** Press any key to clear the error. **2)** If fault returns, replace the keyboard (touch panel). **3)** If the problem persists, replace the display board.
F13 Control's internal checksum may have become corrupted.	**1)** Press any key to clear the error. **2)** Disconnect power, wait 30 seconds and reapply power. If fault returns upon power-up, replace display board.
F14 Misconnected keyboard cable	**1)** Verify connection between display board and touch panel (2 ribbon cables). Make sure the cables are well connected at both ends. **2)** If the cables are good, replace the touch panel. **3)** If the problem persists, replace the display board.
F15 Controller self check failed.	**1)** Replace the display board.
F23 The controller failed to communicate with the convection fan and oven lights control board.	**1)** Verify wiring between P2 on the display board and P2 on the convection fan and oven lights control board. **2)** If wiring is good, replace convection fan and oven lights board. **3)** If the problem persists, replace the display board.
F25 No zero cross signal detected on the convection fan and oven lights control board.	**1)** Make sure L1 and Neutral are connected to the convection fan and oven lights control board on connector P2 (P2 pin 3= neutral / P2 pin 5 = L1). **2)** If problem persists, replace the oven convection fan and oven lights control board.

ELECTRONIC OVEN CONTROL (FAULT CODES) (continued)

ELECTRONIC OVEN CONTROL (EOC) FAULT CODE DESCRIPTIONS

Failure Code/Condition/Cause	Suggested Corrective Action
F30 Open RTD sensor probe/ wiring problem. Note: EOC may initially display an "F10", thinking a runaway condition exists. **F31** Shorted RTD sensor probe / wiring problem. Note: **F30** or **F31** is displayed when oven is in active mode or an attempt to enter an active mode is made.	**1)** Check wiring in probe circuit for possible open condition. **2)** Check RTD resistance at room temperature (compare to probe resistance chart). If resistance does not match the chart, replace the RTD sensor probe. **3)** Let the oven cool down and restart the function. **4)** If the problem persists, replace the display board.
F90 Door motor mechanism failure.	**1)** Press any key to clear the error. **2)** If it does not eliminate the problem, turn off power for 30 seconds, then turn on power. **3)** Check wiring of Lock Motor, Lock Switch and Door Switch circuits. **4)** Unplug the lock motor from the board and apply power (L1) directly to the Lock Motor. If the motor does not rotate, replace Lock Motor Assembly. **5)** Check Lock Switch for proper operation (do they open and close, check with ohmmeter). The Lock Motor may be powered as in above step to open and close Lock Switch. If the Lock Switch is defective, replace Motor Lock Assembly. **6)** If all above steps fail to correct situation, replace the display board and/or the relay board in the event of a motor that does not rotate. **7)** If all the above steps fail to correct the situation, replace the display board in the event of a motor that rotates endlessly.

ELECTRONIC SURFACE ELEMENT CONTROL (ESEC- some models) FAULT CODE DESCRIPTIONS

E11	Shorted Keypad.	Disconnect power, wait 30 seconds and reapply power. If fault returns upon power-up: ***1.*** Replace UIB. ***2.*** Replace Glass Touch Panel
E13	Bad EEPROM.	Replace UIB (User Interface Board).
E14	TST/Display tail missing	Check connection between UIB (connector J2, J3 & J4) & glass touch panel. If connections are good, replace UIB. If problem persist, replace touch panel.
E15	ESEC self test failed.	Replace UIB. If problem returns, replace the relay board.

RTD SCALE

Temp. °F	Temp. °C	Resistance (ohms)
32 ± 1.9	0.0 ± 1.1	1000 ± 4.0
75 ± 2.5	23.9 ± 1.4	1091 ± 5.3
250 ± 4.4	121.1 ± 2.4	1453 ± 8.9
350 ± 5.4	176.7 ± 3.0	1654 ± 10.8
450 ± 6.9	232.2 ± 3.8	1852 ± 13.5
550 ± 8.2	287.8 ± 4.6	2047 ± 15.8
650 ± 9.6	343.3 ± 5.3	2237 ± 18.5
900 ± 13.6	482.2 ± 7.6	2697 ± 24.4

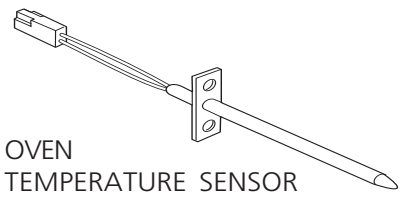

OVEN
TEMPERATURE SENSOR

ELECTRICAL RATING			
Kw Rating 240/208 V	See Nameplate	Bake Element Wattage	2500W / 1879W
Broil Element Wattage	4000W / 3004W	Convection Element Wattage	2500W / 1879W

ELECTRIC SLIDE-IN OVEN CIRCUIT ANALYSIS MATRIX

	On Relay Board ELEMENTS				On Convection Fan and Oven Lights Control Board		On Display Board	On Relay Board		
	Bake P9	Broil P7	Conv. P13	Door Motor J3-5	Light P2-1	Convection Fan P2-7	Door Switch P8-3 / P8-5	DLB L2 out P1	Cooling Fan Low speed J3-7	Cooling Fan High speed J3-8
Bake	X	X	X*			X*		X	X	
Keep Warm	X							X	X	
Broil		X						X		X
Conv. Bake	X	X	X			X		X	X	
Conv. Roast	X	X	X			X		X	X	
Conv. Broil		X				X		X		X
Clean	X	X						X	X	X
Locking				X						
Locked										
Unlocking				X						
Unlocked										
Light					X					
Door Open					X		X			
Door Closed										
Bread Proof	X							X	X	

Relay will operate in this condition only

* Convection element and fan are used for the first rise of temperature.

EXPLODED VIEW OF CONVECTION SYSTEM

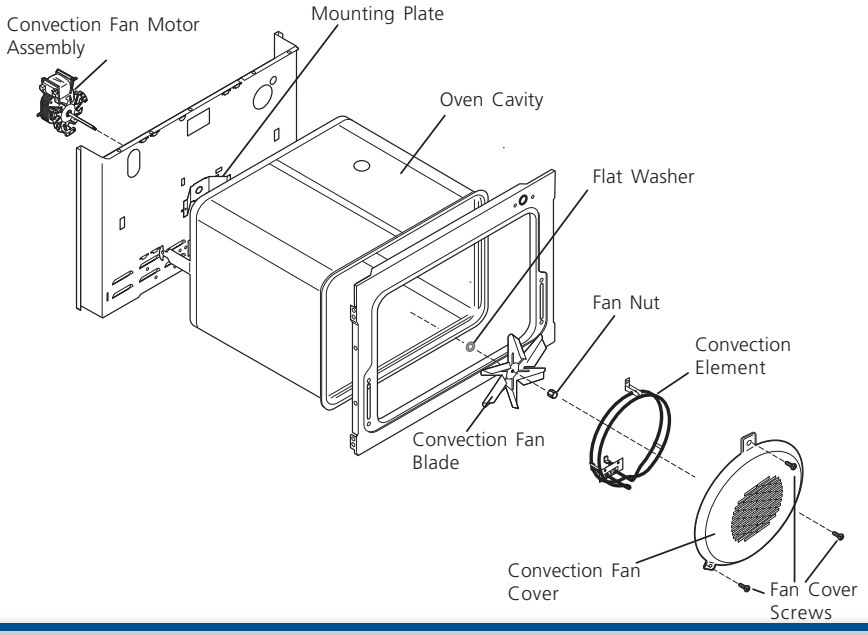

FAN BLADE

The fan blade is mounted in the rear of the unit and has a "D" shaped mounting hole. Only minimum clearance exists between the oven back, fan blade, and fan shroud. Be careful not to bend blade when removing or installing.

Access to the fan blade is gained by removing the fan shroud, held in place by three screws, from the inside of the oven.

The fan blade is held in place with a hex nut that has **left handed** threads. When removing this nut, gently hold the fan blade, and turn the nut clockwise. If one of the blades becomes deformed, it may be bent back into shape using a flat surface as a reference.

A flat washer is located on the motor shaft between the snap ring on the shaft and the fan blade.

NOTE: If the fan blade is bent and motor vibrations increase, the noise made by the fan will be greater.

MOUNTING PLATE OVEN

The fan motor on the rear of the unit is mounted to the main back (with three screws). There is a mounting plate held in place between the main back (with 2 screws) and the rear oven wall (with 2 screws). Should it be necessary to replace the oven cavity, you must remove the 2 screws located inside the unit at the rear of the oven cavity.

COOLING FAN MOTOR

The 120 volt fan motor is located on the outside of the rear of the oven. The cooling fan has 2 speed options, which are driven by the oven controller. The high speed mode is used on self-clean when the temperature gets over 575F. The high speed is also used anytime the broil or convection broil function is used. The cooling fan may remain at high speed after the broil function is cancelled to allow better cooling of the oven.

MEAT PROBE RESISTANCE

Meat Probe Temperature VS Resistance Table

Temp. Celsius	Temp. Fahrenheit	Probe Resistance
25°C	77°F	49.478 Kohm +/- 7%
50°C	122°F	17.737 Kohm +/- 4.9%
80°C	176°F	6.107 Kohm +/- 3.3%
100°C	212°F	3.264 Kohm +/- 4.6%

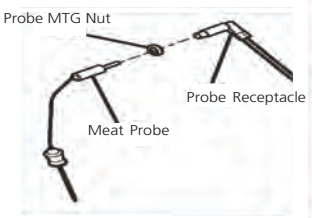

OVEN DOOR REMOVAL AND REPLACEMENT

To Remove and Replace Oven Door

1. Open the door to the fully opened position.
2. Pull up the lock located on each hinge support toward front of range. You may have to apply a little upward pressure on the lock to pull it up.
3. Grasp the door by the sides, pull the bottom of the door up and toward you to disengage the hinge supports.
   Keep pulling the bottom of the door toward you while rotating the top of the door toward the appliance to completely disengage the hinge levers.
4. Proceed in reverse to re-install the door. Make sure the hinge supports are fully engaged before unlocking the door

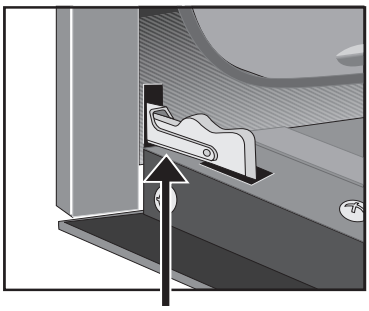

Lock in normal position

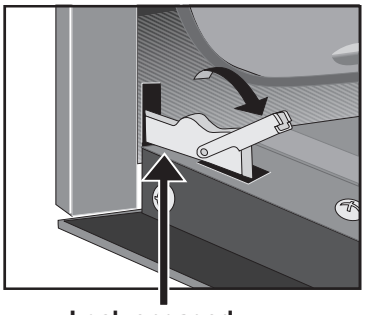

Lock engaged for door removal

HINGE SLOT - Door removed from the appliance

TRUE HIDDEN BAKE ELEMENT REMOVAL

Follow the steps below in order to replace the through hidden bake element on a single wall oven and the lower through hidden bake element of a double wall oven.

1. Remove the lower decorative trim (2 screws).
2. Using a pair of long nose pliers, remove the cutter pins and the screw which are holding the true hidden bake element service panel in place (under the oven liner).
3. Disconnect the two bake element wires.
4. Slide the true hidden bake service panel and element out of its operational emplacement.
   The steps below are to follow in order to replace a double wall oven's upper true hidden bake element only.
5. Remove the center trim. You may use a flat screwdriver in order to pull the center trim out.
6. Remove the door lock assembly.
7. Follow the same steps as for the single wall oven (2-4 above).

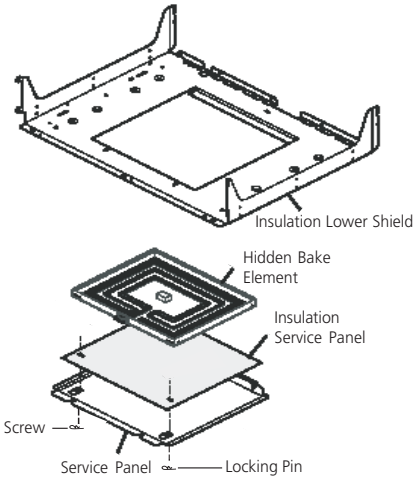

DOOR LOCK MECHANISM

The appliance is equipped with an electronic oven control and has an auto locking door latch feature. When the self clean cycle is programmed, the door is locked by a motor operated latch system. The interior of oven doesn't need to heat up to 500°F/260°C before the door locks. However, until the temperature inside oven reaches 500°F/260°C, the self-clean program can be canceled and door will unlock immediately. After oven reaches temperatures over 500°F/260°C, the door will not unlock until temperature drops below 500°F/260°C.

If a problem appears and the door stays locked it is possible for the **servicer** to unlock the door without removing the appliance from its place. Follow the steps below:

1. Trip the circuit breaker to **OFF** position.
2. Remove the 2 screws, which are fixing the oven door latch, located between the control panel and the oven door.
3. When the screws are removed it is possible to unlock the latch with a flat screwdriver, or one of the tools supplied with the wall oven which are used to take off the oven from the cabinet. Insert the tool tip through the slot on top of the oven door. During this step it's important to take care to not damage the appliance.
4. As soon as the latch is in the unlock position, you can open the door.
5. Replace the motor latch:
   Upper Oven:
   1. To have access to the door latch assembly, remove the 3 screws under the control panel which are fixing it.
   2. Remove the electronic plate located on the access plate.
   3. Remove the access plate located on the upper air channel by removing the screw.
   4. Replace the motor latch with a new one and reassemble in opposite order and manner of removal.

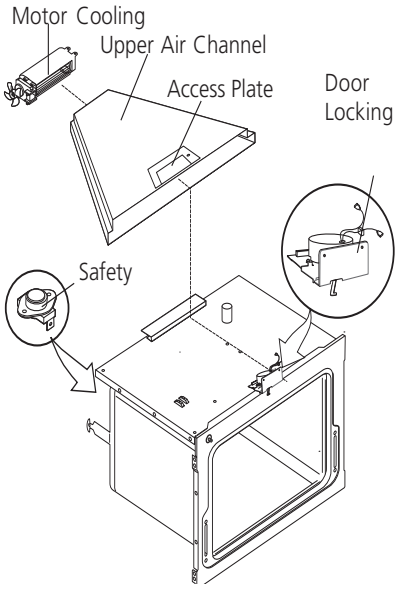

OVEN LIGHT

This applicance is equipped with electronics that control the intensity of the oven lights. This is done with the Convection Fan and Oven Lights Control Board that modulates the AC voltage going to the 120V halogen lamps. When the light key is pressed or when the oven door is opened the display board communicates with the Convection Fan and Oven Lights Control Board to specify the required light intensity. The Convection Fan and Oven Lights Control Board also add a "theater-like" effect on the light: the light intensity is gradually ramp-up or ramp-down as the light is turned on or off.

The lights of the upper and lower oven (warmer oven) are connected together and will turn on or off at the same time, they cannot be controlled individually.

If the oven lights do not operate, check the following:
- If you are getting an F23 error code it means the display board is not able to communicate with the Convection Fan and Oven Lights Control Board, thus the oven light will not operate. Check connections between the display board and the Convection Fan and Oven Lights Control Board. Refer to the fault code section for corrective actions.
- If the lights are always ON (even with the door closed), it could be because the control mistakenly thinks the door is opened. Verify door switch and its wiring.
- Check connections on the Convection Fan and Oven Lights Control Board. On connector P2: pin 3 should be Neutral, pin 5 should be L1 (120VAC) and pin 1 should go to the oven lights. The other terminal of the light should be connected to Neutral.
- Verify is light bulbs need to be replaced.
- If there is no error code, the wiring is good and still the oven lights are not working then replace the Convection Fan and Oven Lights Control Board.

Block Diagram and System Interconnections
Slide-in electric

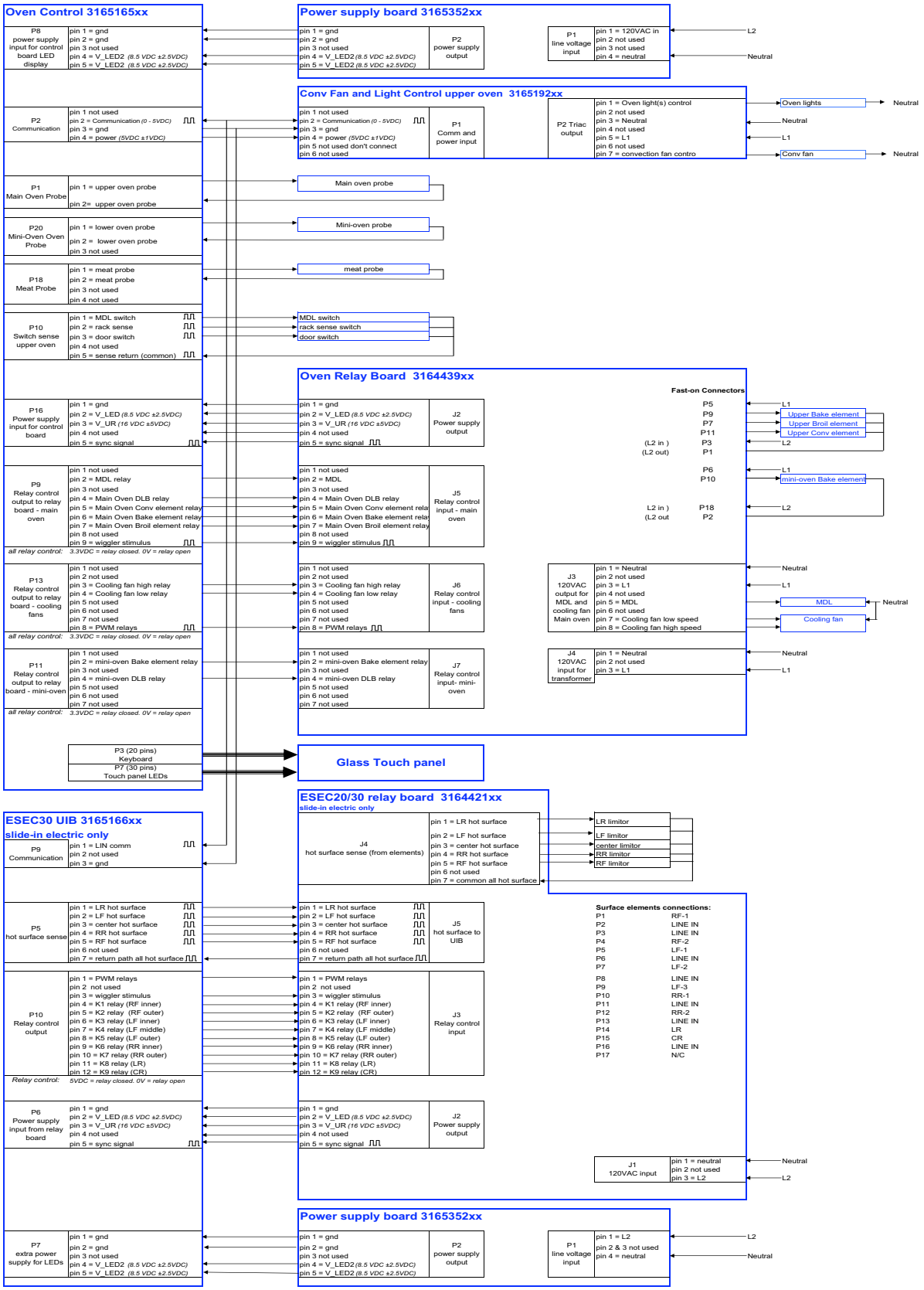

Electrolux

DISHWASHER PRODUCT TRAINING SECTION

MODELS - EIDW6105G , EIDW6405G , EWDW6505G

Control

The control is a component made up of two parts: one part is the electronic control itself mounted in the front of the cabinet base behind the toe kick and the second is the keypad, or user interface, located in the console on top of the door. Power to operate the control comes directly from the junction box. All of the switches and component relays mounted on the control are powered by 12VDC from a transformer also mounted on the control. The control is the power source for all of the electrical components in this dishwasher.

The control operates the dishwasher to complete the selected wash cycle by receiving input information from sensors but actually records the current draw of the major operating components. Once the cycle starts the control can: shorten or lengthen the selected cycle, adjust the cycle for water temperature, and vary the speed of the wash motor as needed. For these reasons to know for certain how long a selected cycle will run can be very difficult.

As the control monitors the current draw of components, there are also sensors and switches providing information to the control throughout the cycle. In the sump, there is a turbidity sensor providing information to the control as to the turbidity of the water to determine if fills need to be added to improve cleaning. There is a thermistor to provide the control with the temperature of the water. There is a flood sensor mounted in the base cover to provide a warning alert in case of a water leak under the dishwasher. Along with these sensors are switches like the door switch which senses the door is closed and the dishwasher can be safely operated and the float switch which will stop voltage to the water valve solenoid if the tub over fills.

The data collected by the control while in operation, offers the advantage of the control to help diagnose major component failures if they occur.

EIDW6105G

EIDW6405G

EWDW6505G

User Interface for the three different modles

Electronic control back side

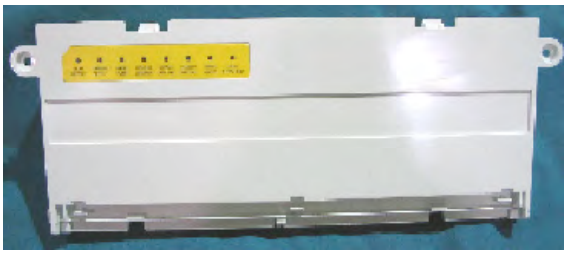

Electronic control front side

To assist in diagnosing the control system, LED lights on the front cover of the control housing will light to indicate when the control senses a failure or detects a problem in the unit. The control can also display a failure code on the console as an alert to a problem. There are test cycles programmed into the control just for service to help diagnose problems.

Key Pad

The key pad, or user interface, allows the customer to select a wash cycle and any available options for that cycle. The customer also has an option to start their selection now or to delay it until a later time. This line of dishwashers offers three different combinations of interface and display.

Relay/Triac & Sensor Test

This test allows the technician to trouble shoot the dishwasher by energizing the different operating components independently of one another. The best way to understand the value of this test for field service technicians is the example of testing the detergent dispenser. By setting this test, you can power up the dispenser for as long as you need to diagnose a cover not opening as it should.

This test is accessed from power up of the dishwasher or a power reset of the control. See the list to follow for the different models as to how to enter this test.

EWDW6505G

To enter the Relay/Triac Test on this model from power up or power reset, press the Delay Time and Set keys. The dishwasher enters a program for all control tests. Press one of the arrows to either side of the display until the Relay/Triac test reads in the display. Press the set pad to select this test. Once in the Relay/Triac test pressing the arrows now selects the component to be tested. To start your test, press the Set pad. When your test is complete, press the Set pad to end the test. To exit the Relay/Triac test, press and hold the Set pad, this re-starts the control and WELCOME scrolls across the readout.

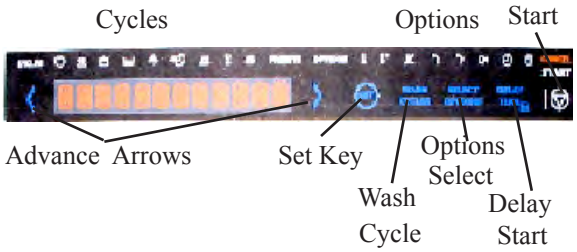

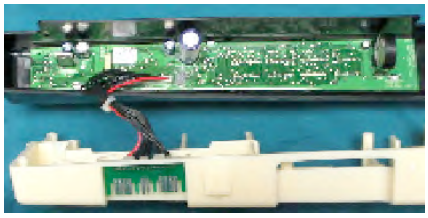

Inside of console for the EWDW6505G showing the back of the Wave Touch userinterface.

EIDW6305G & EIDW6105G

To enter the Relay/Triac test on these models from power up, press the Sanitize and Delay Start to enter the Engineering Tests an Et will be displayed. Next press the Rinse only pad and "rt" will appear. This means you are in the test now follow the chart for which pad to press for the different components.

By pressing the pad listed, the component will start. To stop the test, the same pad must be pressed a second time.

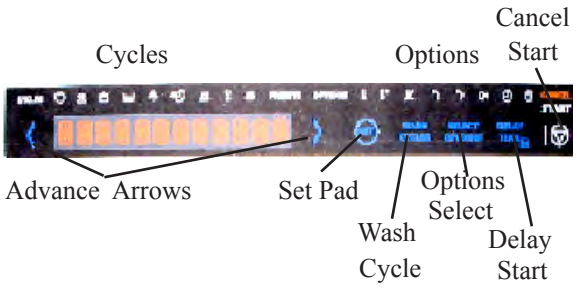

PAD	Component	Light On/Off
Auto Sense	Washer Motor	LED On/Off
Heavy	Water Valve	LED On/Off
Normal	Drain Motor	LED On/Off
Quick	Drain Valve	LED On/Off
Rinse Only	Clean Light LED	LED On/Off
Hi Temp	Check all the LED's	on the control housing
Sanitize	Fan State	
Air Dry	Dispenser	LED On/Off

When checking the heater always fill tub with water

My cycle	Heater	LED On/Off

EWDW6505G

This is the fully integrated model with a Wave Touch interface mounted on top of the console. This interface is touch sensitive with an alphanumeric display. This display allows for a clearer description of features and options available for the selected wash cycle. When the cycle is complete a blue light shines on the floor under the door to indicate the cycle is complete. This model will also display clean when the door is opened. On this model, the Wave Touch user interface will be supplied only as a complete console.

EIDW6405G

This model has a tactile switch mounted on the top right side of the console and a display mounted in the front of the console. The tactile switch allows the customer to select wash cycles and options then start the cycle or delay until a later time. The front display shows time remaining in the cycle, any delay, along with cycle status. At the completion of the cycle, CLEAN will appear in the display and a blue light will shine on the floor under the door.

EIDW6305G

Sanitize and Delay Start to enter the Engineering Tests

EIDW6105G

Sanitize and Delay Start to enter the Engineering Tests

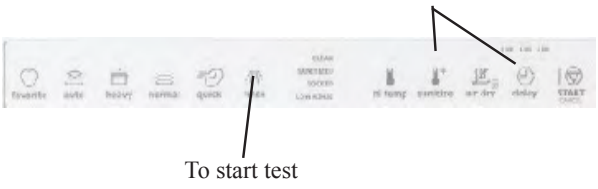

Servicing the user interface for EIDW6405G

To replace the user interface remove the console from the inner door panel. Remove the 4 Torx head screws holding the console cover in place then unsnap the console cover. The interface assembly is mounted with 4 screws. To remove the display, press in on the clips and the display comes out the front of the console cover.

EIDW6105G

This model has a tactile switch on the top right side of the console with no display. The customer selects the cycle and options and starts the cycle or delay to a later time. At the completion of the cycle, a clean light will come on and stay on until the door is opened; plus a blue light will shine on the floor under the door.

Servicing the user interface for the EIDW6105G

To replace the user interface remove the console from the inner door panel. Remove the 4 Torx head screws holding the console cover in place then unsnap the console cover. The interface assembly is mounted with 4 screws.

Turbidity Sensor

The turbidity sensor is located in the front portion of the water collection section of the sump. This sensor is used by the control to determine the turbidity of the water then adjust the cycle length as needed.

The sensor housing has two up right posts: one enclosing a transmitter and the other a receiver with an open space between them. Sensing starts with the control powering the transmitter in the sensor that sends a light signal to the receiver that changes the light back to power and returns it to the control. The control compares the returning power with the last calibration reading from the sump to determine the degree of turbidity in the water. Adjustments can now be made to the cycle time. The number of times the control checks the turbidity sensor will depend on the cycle selected and the information received from the sensor. Calibration of the control by the sensor will be performed in the dry section of every completed wash cycle. To re-calibrate, the control energizes the water valve for 10 seconds to add clean water to the sump; the control performs a turbidity check of clean water; this information is now stored in the control for the next wash cycle.

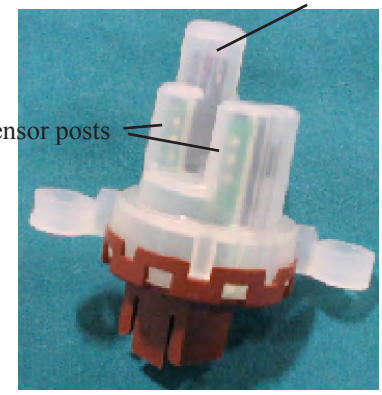

Turbidity Sensor/ Thermistor

Thermistor

The thermistor is a sensor used by the electronic control to determine water temperature in the dishwasher. Both the thermistor and the turbidity sensor are combined into the same housing which is located in the front water collection section of the sump.

To Service the Thermistor

The thermistor is wired to the electronic control and can be checked at the control for resistance. The thermistor is checked by reading its resistance at room temperature; this will be 10K ohms, if it is checked after a fill, the reading will vary depending on the water temperature. If the thermistor needs to be replaced, the dishwasher will need to be removed from under the counter.

External Flood Switch

The external flood switch is a sensor that in the event a concealed water leak develops under the dishwasher, the control will terminate the cycle, initiate a cancel/drain, sound a warning signal, and lock out the dishwasher for further use. The signal from the control will be flashing lights or on some models, an audible alarm. To stop the alarm, power to the dishwasher must be turned off. If the power is turned off then turned back on with water still present, the alarm will reappear or sound. If, while the power is off, the leak is repaired or the water dries in the cover, the alarm will not sound. If a leak returns, the alarm starts over.

Servicing the Flood Switch

This sensor is mounted to the inside corner of the wash motor mount. It has four pins pointed down into the base cover. The two outside pins are used to sense water in the base cover. The base cover is a solid plastic cover with raised edges that can hold up to a quart of water in the event of a leak. Two screws hold it to the base. The dishwasher should never be operated without the bottom cover in place. To replace the Flood Switch, it will require removing the sensor from the motor mount spread, pull the retaining clips away from the sensor and slide out the mount.

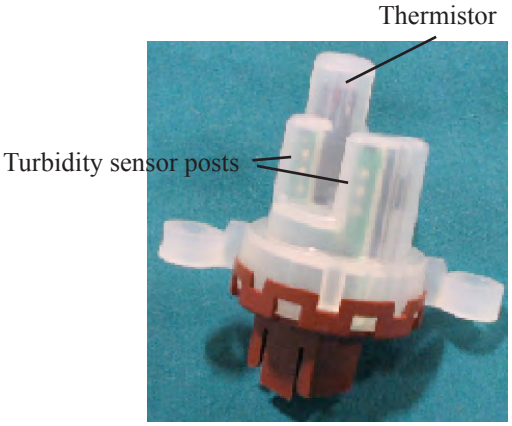

Turbidity Sensor/ Thermistor

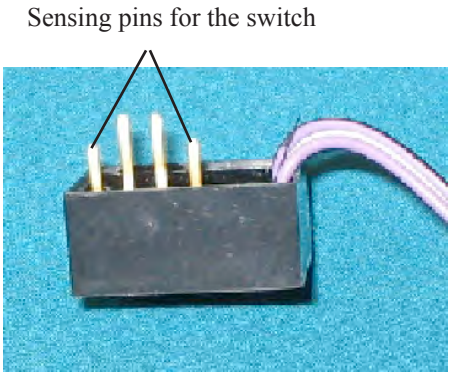

External Flood Switch

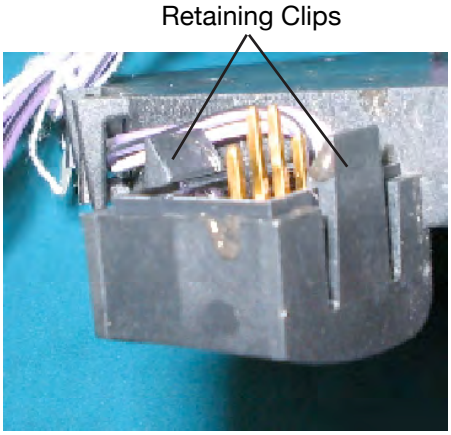

Sensor in the wash motor mount

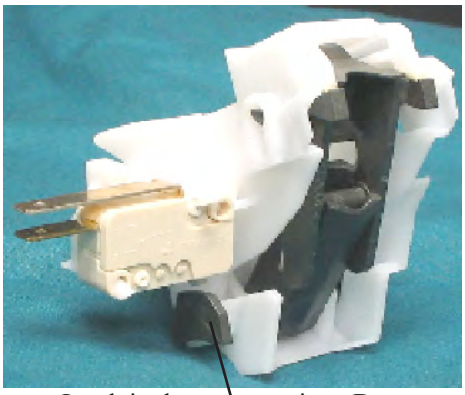

Latch in the open postion. Door switch actuator away from switch

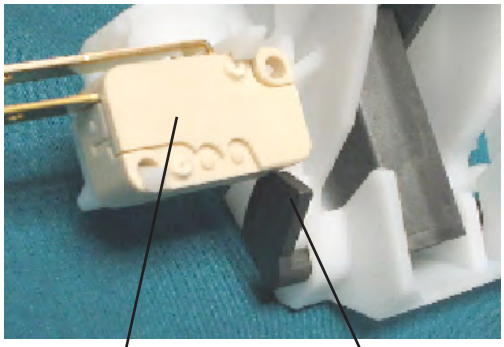

Door switch

Actuator showing door switch is closed

Latch mounted to inner door panel

Dispenser

Door Latch and Door Switch

The door latch and switch are one assembly mounted to the top of the inner door panel. The latch has three major parts: a latch body, a cam, a latch spring. As the door closes onto the strike that is mounted to the top frame of the dishwasher tub, the strike presses back the cam inside the latch body. This movement both compresses and pivots the latch spring directly below the cam. As the spring moves past the center it expands while raising a hook molded as part of the cam into the hole in the strike latching the door.

This dishwasher requires only one door switch, which is a normally open micro switch mounted to the side of the latch body. The switch is closed by an actuator from the latch as the door closes. The door switch closes completing the 12VDC circuit in the control.

Servicing the Door Latch&Switch Assembly

The door latch is accessible by removing the console. the altch and door switch come as one assembly. Check the opening and closing of the door switch by manually opening and closing the button of the door switch. Check continuity in the switch. The latch is mounted to the door using two Torx head screws.

Dispenser

The dispenser is both a detergent dispenser, and a rinse aid dispenser actuated by a common wax motor actuator. The detergent side of the dispenser has two detergent cups covered with one cover. The larger of the cups is for detergent used in the main wash of each cycle, the smaller cup holds detergent for the pre-wash. the cover over the pre-wash section in the dispenser has openings to allow detergent to fall into the tub once the dishwasher door is closed. The rinse aid dispenser acts as a reservoir for the rinse agent and dispenses this agent into the dishwasher at the appropriate time in a cycle. This dispenser can be adjusted to meet the needs of the customer. To adjust the amount of rinse aid dispensed, first remove the cap then locate the adjustment arrow inside the dispenser body, turn the arrow to select from 1 to 4, with 1 being less and 4 the greater, the desired amount. The rinse aid dispenser has a sensor to inform the customer when the rinse aid level is low in the dispenser. This information will be displayed by the control.

How the Dispenser Operates

The cover over the larger cup is opened at the proper time by the control. Power from the control energizes the wax motor extending the actuator from the motor to release the cover over the cup. As the actuator of the wax motor retracts, linkage to the rinse aid section of the dispenser shifts for the next actuation of the wax motor. The control powers the wax motor a second time dispensing rinse aid into the final rinse of the cycle. As the actuator retracts into the wax motor, the linkage resets for the next wash cycle.

Servicing the Dispenser

To check operation of the dispenser, program the dishwasher into the Relay/ Triac Test. Program power to the dispenser and time how long it takes the wax motor to extend to release the cover. After this test has completed, set the dishwasher into a Quick wash cycle to check operation of the dispenser in a wash cycle. The dispenser should open after the second fill. The ohm reading for the wax motor on the dispenser is 2.38K ohms.

Description of parts will be by operating system in this dishwasher

Fill System

The fill system consists of the water valve, the side air duct, and the float activated safety switch. Both the water valve and the float safety switch are wired directly to the electronic control. The amount of water entering the unit in the fill cycle will be 1.4 gallons with a length of 105 seconds. A visual check for the proper amount of water will be just to the outside of the stainless steel filter. The water system pressure required for proper operation is from 20psi to 120psi.

Water Valve

The water valve mounts to the front left side of the base and is accessed by removing the toe kick. The valve is wired directly to the electronic control and operates on 120VAC. All cycle fills on this dishwasher are time fills. These are regulated by a flow restrictor in the valve body. The flow rate of this valve is .83gpm with the incoming water pressure from between 20 to 120psi.

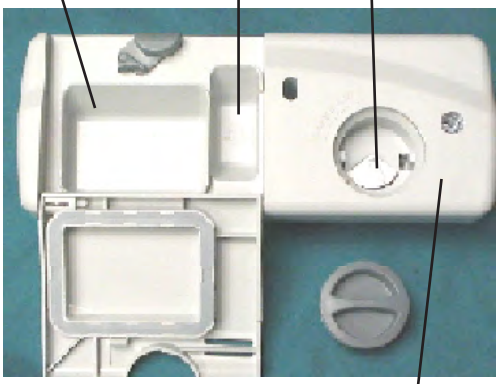

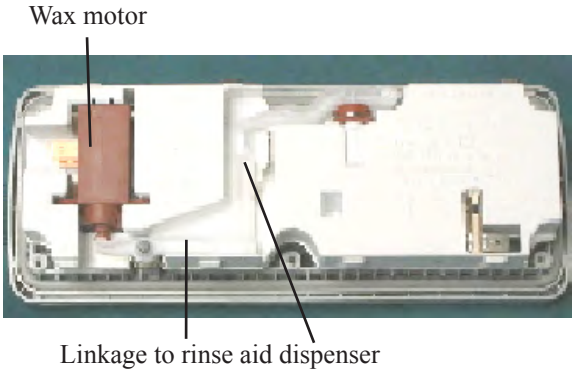

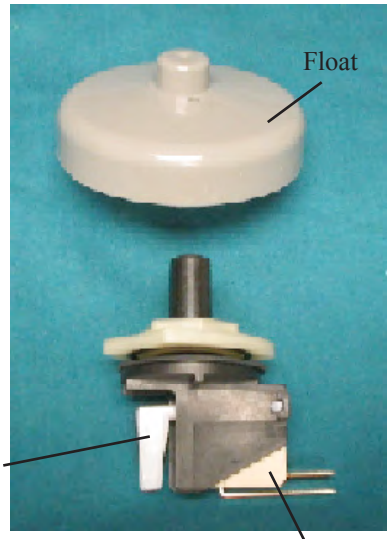

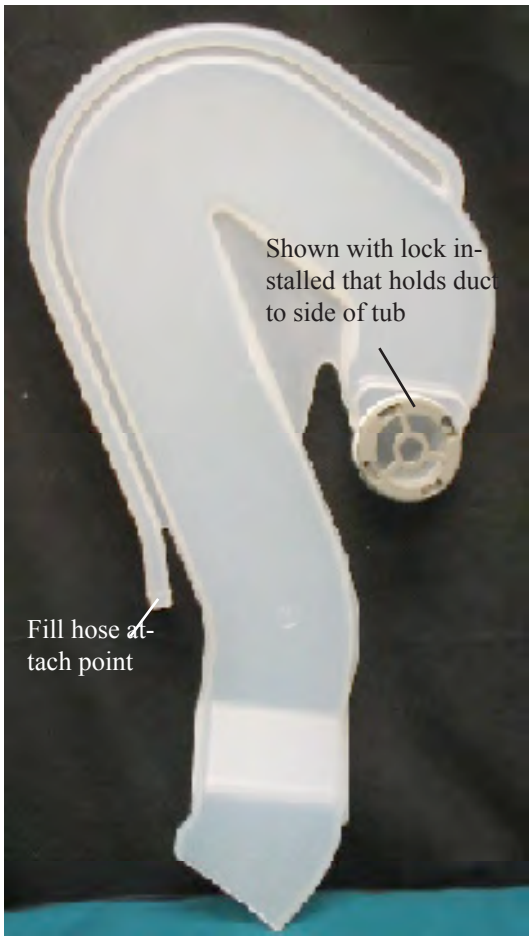

Side Air Duct

Servicing the Water Valve

Remove the cover above the valve before removing the valve from the base. The solenoid resistance is 1000 ohms. The valve can be replaced without removing the dishwasher.

Replace the Water Valve

1. Turn off power to the unit
2. Turn off water to the unit at the water supply
3. Remove toe kick
4. Remove small access cover over the valve
5. Remove water line from valve. Make sure you have a towel to catch the water from the line before loosening the valve.
6. Remove screws holding the valve to the base and pull the valve forward to remove the wires from the solenoid and fill the hose from the valve body use a towel to catch water as the fill is removed.
7. Replace valve and install it in reverse order

Float Switch

The float switch is a safety switch that in the event that an over fill occurs, the switch opens the circuit to the water valve relay mounted on the electronic control. The float switch is located under the tub in the left front corner. This switch is a normally open micro switch that closes when the float inside the tub is in place.

Servicing the Float Switch

The switch can be checked for continuity at the electronic control. The switch is checked for operation by raising and lowering the float from inside the tub. To replace the float switch, the dishwasher will need to be removed from under the counter. The mounting nut unscrews from the mount on the inside of the tub.

Side Air Duct

The side air duct serves a dual purpose. It provides a fill nozzle for water entering the dishwasher and as a duct to direct air and steam from the tub in the dry cycle. The duct is mounted to the left side of the tub and held in place by the water inlet cover.

Servicing the Side Air Duct

The dishwasher will need to be removed from under the cabinet to replace this part. The water inlet cover turns off counter clock wise. Remove the fill hose and lift the duct from the lower air duct in the base. When installing this air duct apply a small amount of lubricant on the end of the duct before placing it into the lower vent duct.

Wash System

The wash system collects water and sprays this water onto the dishes for cleaning. The parts in the wash system are the sump, the in-line heater, wash motor, the delivery tube, and the three spray arms.

Sump

The sump has two sections, the front for water collection, and the rear for water distribution. The front water collection area serves as a reservoir for water that has passed through the stainless steel filter to be used by the water distribution system. This section also has a partition down the center so it can also hold water and food particles between pump outs. During he wash cycle, water cannot pass between these two compartments. There are two check valves in the sump to allow the sump to completely drain at pump out. The rear distribution section mounts both the volute cover for the lower spray arm, and the delivery tube that supplies water for the upper two spray arms.

Servicing the Sump

The partitions can be removed from inside the dishwasher. The partition in the front collection must be removed before removing the stainless steel filter. It is mounted with three Torx head screws. The second partition is to the left of the sump and can be lifted from the sump. The sump will not be a service part for replacement and will be supplied with the tub assembly.

Inline Heater

The inline water heater is the total heat source for this dishwasher. Water pulled from the sump by the wash pump first passes through the inline heater before entering the water distribution system. The inline heater assembly is made up of a 1200 watt heater, formed into a coil, along with a safety thermostat and a thermal fuse which is all mounted to a stainless steel tube. The safety thermostat is a self resetting thermostat opening at 200°F and resetting at 100°F. The thermal fuse is a one time fuse that opens at 440°F. If the thermal fuse should open the heater assembly will need to be replaced. In normal operation, the control will not power the heater until the unit was filled and the wash pump is operating.

Area used to collect food particles Before draining

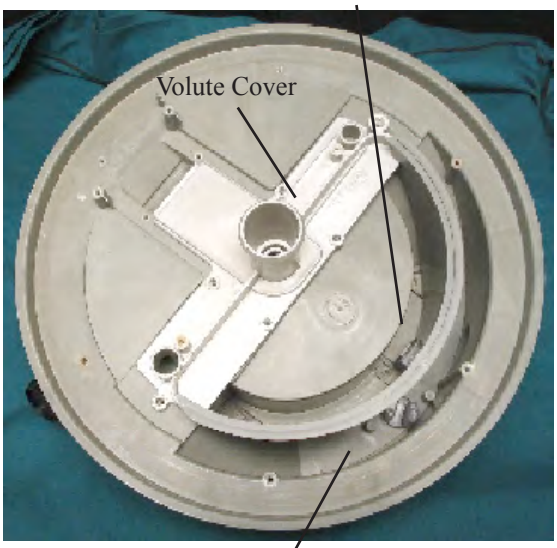

Reservoir for the distribution system

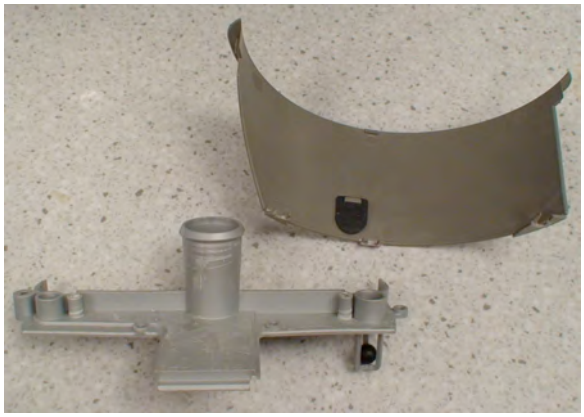

Two check valves

Inline heater

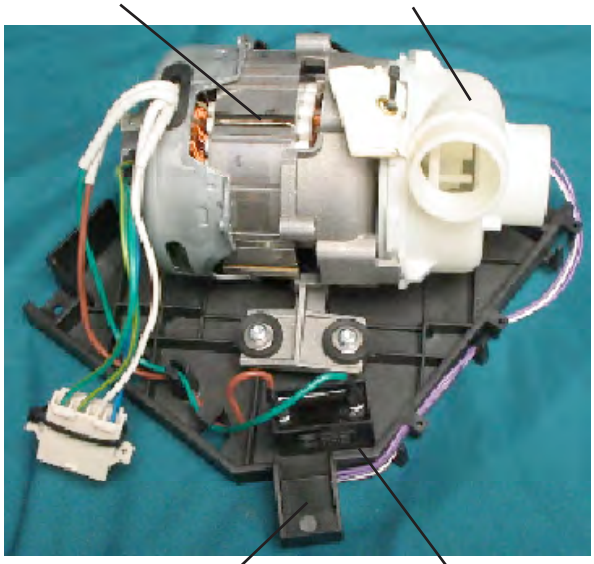

Water distribution system

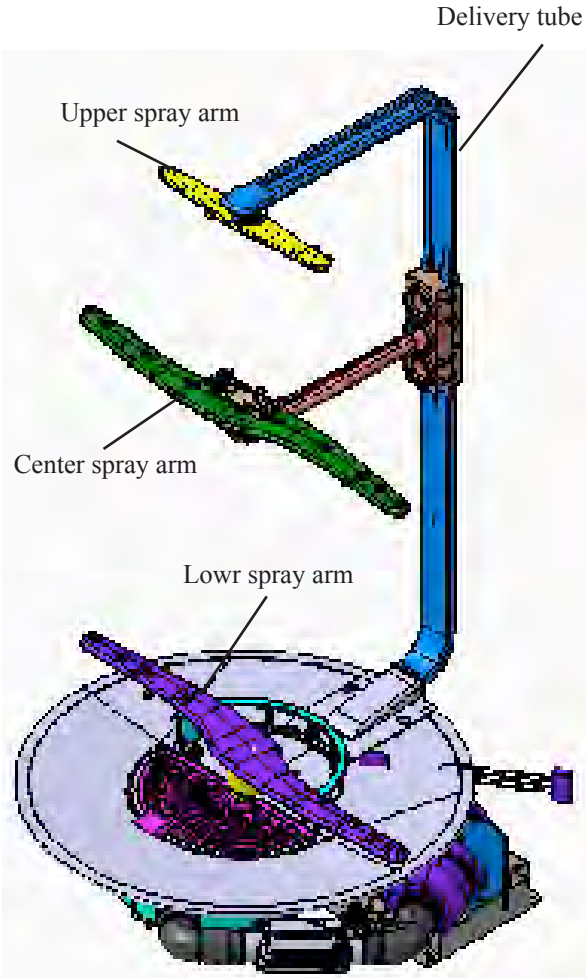

Servicing the Inline Heater

The inline heater can be checked for resistance at the electronic control. The ohms reading on the heater is 11.7 ohms cold. This heater is not to be checked with power applied without water in the unit. To replace the inline heater, the unit needs to be removed from under the counter.

Wash Pump and Motor

The wash pump and motor assembly supplies water under pressure for cleaning in the dishwasher. The wash pump mounts to the face of the motor and is supplied only as an assembly. The motor is a variable speed, 120VAC, 1.5amp motor with a running capacitor and turns clockwise. The speed of the motor is determined by the cycle selected and controlled by the electronic control. This speed can vary from a high of 3300rpm to a low of 2200rpm. The control monitors this speed by input from a tachometer mounted in the rear of the motor. For maintenance, the wash pump can be cleaned without removing it from the motor.

Servicing the Wash Motor and Pump

The motor can be checked for resistance at the electronic control. The ohms reading of the motor between the blue and white leads is 22.9 ohms. The tachometer can also be checked at the control. The ohms reading on the tachometer is 219.9 ohms between the two green/yellow wires on the motor plug. To replace the wash pump and motor assembly, the dishwasher will need to be pulled from under the counter.

Delivery Tube

The delivery tube supplies water to the upper two spray arms. This tube is mounted to the tub with two retaining brackets, one on the back wall, the other on top of the tub. The delivery tube has three openings in the tube up the back of the tub to be used for the center spray arm. Each of the openings has a shut off valve that closes when not in use. The top spray arm is mounted directly to the delivery tube with a push in retainer.

Servicing the Delivery Tube

To remove the delivery tube, first remove the stainless steel filter and the fine filter followed by the volute cover then the tube can be removed from the stainless steel mounting clips; one on the back wall and the other in the top of the tub. The center ports for the center arm will snap off the tube and the clip mounting the top spray arm pulls out the tube.

Lower Spray Arm
The lower spray arm mounts to the volute cover located in center of the sump. This spray arm turns clockwise spraying into the lower rack. As this arm turns, water sprays from holes and a leg on the underside of the arm to clean both the stainless steel filter and the pressure filter assembly. Cleaning the pressure filter assemble is necessary for water to pass through it properly, and water sprayed across the top of the stainless steel filter moves food from the filter to the front water collection area for pump out.

Center Spray Arm
The center spray arm mounts to a supply manifold attached to the underside of the upper rack. This arm sprays up into the upper rack and down onto dishes in the lower rack and turns counter clockwise.

Servicing the Center Spray Arm
The spray arm mounts to a water manifold that is clipped to the upper rack. To remove this assembly, push up on the mount to free it from the upper rack then it pulls out from underneath.

Upper Spray Arm
The upper spray arm mounts to the end of the delivery tub and turns in a counter clockwise direction spraying water down onto the upper rack. This arm is held in place by a push-in mount from the under side of the arm.

Water Filtering System
The water filtering system removes and holds food particles from the water that has been sprayed onto the dishes. This system has three parts: a large round stainless steel filter, a pressurized fine filter assembly, and a lift out filter cover.

Stainless Steel Filter
The round stainless steel filter covers the sump then extends over onto the bottom of the tub this increases the area used for water filtration. To prevent food from by-passing the filter, the outer perimeter of this filter is recessed into the bottom of the tub. Holes cut into the filter surface hold food particles out of the sump and allow only water to pass through.

Check Valve

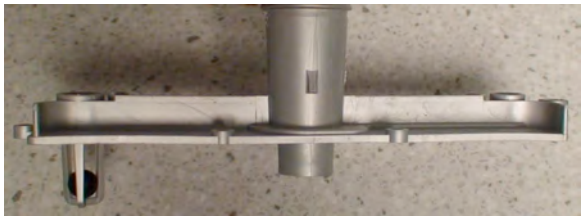

Remove these screws to remove stainless steel filter

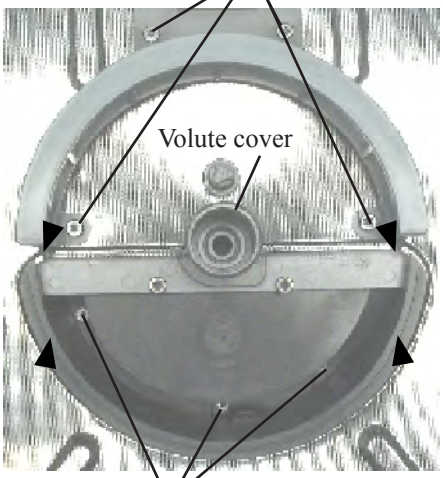

Remove these screws to remove stainless steel filter

Check Valve

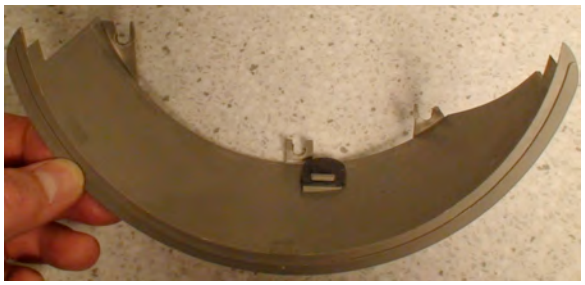

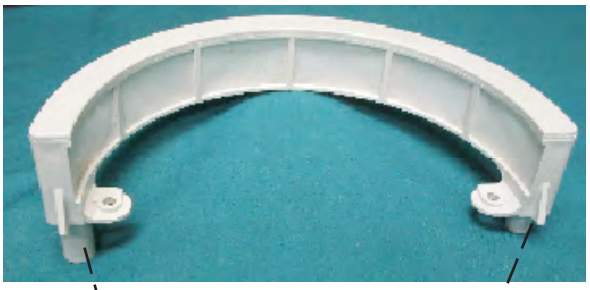

Pressurized fine filter assembly

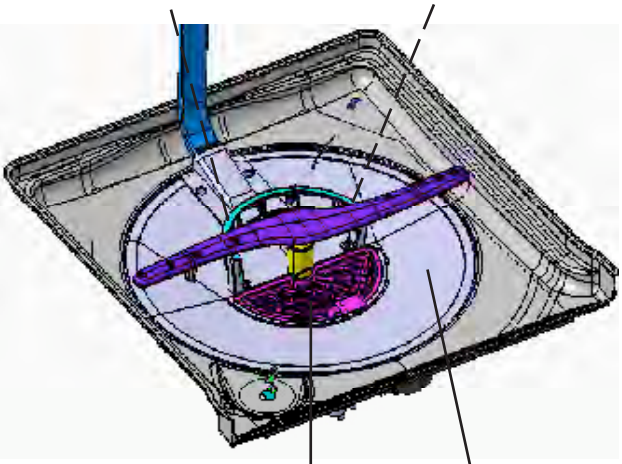

Stainless steel filter

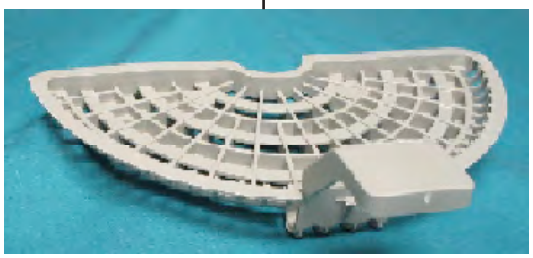

Lift out filter cover

To Remove the Stainless Steel Filter

The filter is held in place in the front by the partition separating the front water collection area of the sump. Remove the filter cover and the lower spray arm. Next remove the three Torx head screws holding the sump partition into the front section of the sump. Remove the pressure filter assembly by removing the two Torx head screws followed by the two screws on the cover for the delivery tube. Lift the filter from the sump being careful not to bend the filter as it is removed.

Pressurized Fine Filter Assembly

The pressurized fine filter assembly filters very fine food particles and grit from the water to be sprayed onto the dishes. Water enters this assembly from a port recessed into the right end of the volute cover. Water exits through the fine mesh screens down both sides of the filter leaving trapped food particles and grit inside the assembly. The mesh screens on the sides of the filter are cleaned by the lower spray arm. The left end of the filter is recessed into the pump out section of the sump so trapped food particles and grit can be easily pulled from the filter.

To Remove the Pressurized Fine Filter

The filter is held in place by two Torx head screws. Remove the lower spray arm before removing the two Torx head screws.

Filter Cover

The filter cover covers the back section of the water collection area in the sump. This cover traps larger pieces of food and keeps them out of the water collection section of the sump. This cover needs to be checked and cleaned by the customer. There is a handle molded to the side of the cover to aid in lifting it from the tub. When removed, the rear section of the water collection section can be cleaned.

Disassemble the Sump

1.Remove lower spray arm and lift out filter cover

2. Remove sump divider by removing he three Torx head screws holding it in place

3. Remove the two Torx head screws for the fine filter and remove the filter

4. Remove the two Torx head screws for the delivery tube cover to the rear of the fine filter

5. Carefully remove the stainless steel filter

6. To remove the volute cover, take out the six Torx head mounting screws.
7. Carefully remove the volute cover. There is a small check ball in the left end of the volute cover.
8. To clean sump check valve, the partition lifts from the sump.
9. To remove mount for delivery tub, remove two Torx head screws.

Drain System

The drain system consists of a drain pump, a drain valve, and connecting hoses. At the beginning of the wash cycle, the drain valve is in the closed position. This maintains the level of water in the dishwasher. As the cycle advances to a pump out, the control first opens the drain valve while the wash motor is still operating. Once the control knows the valve is opened, the drain pump starts. At the beginning of the drain cycle both the wash pump and the drain pump are running simultaneously; this aids in food removal from the tub. The wash motor stops and the drain pump completes the pump out. At the completion of the cycle, the drain valve closes keeping water from entering the dishwasher from the drain line.

Drain Pump

The drain pump pulls water from the sump to drain the dishwasher. This pump is a wet rotor style and mounted directly to the sump. The drain pump can start in either direction. This is to prevent it from locking up. The pump housing or cover can be removed for cleaning.

Servicing the Drain Pump

The drain pump can be checked for resistance at the electronic control. The ohms reading for the drain motor is 21.5 ohms. To replace the drain pump, the unit needs to be removed from under the counter.

Drain Valve

The drain valve is intended to maintain the proper level of water in the tub. This valve is installed between the drain hose and the drain pump. The valve consists of a check ball in a cradle, a motor, and a location cam and switch. The motor rotates the check ball in the housing to open and close the drain port. The cam and switch are used by

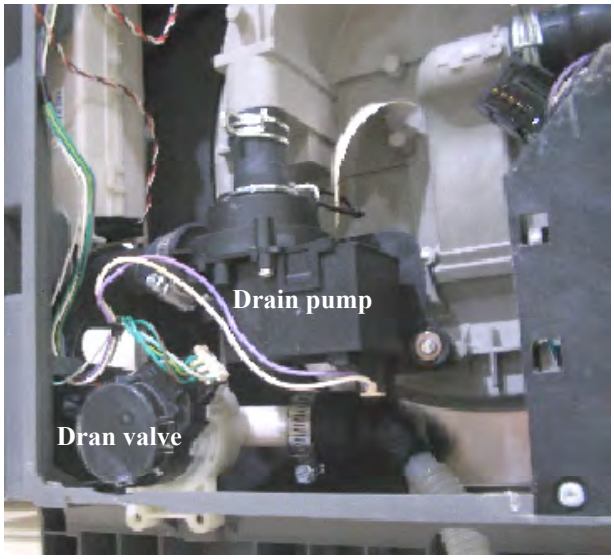

Drain system with bottom cover removed

Drain pump

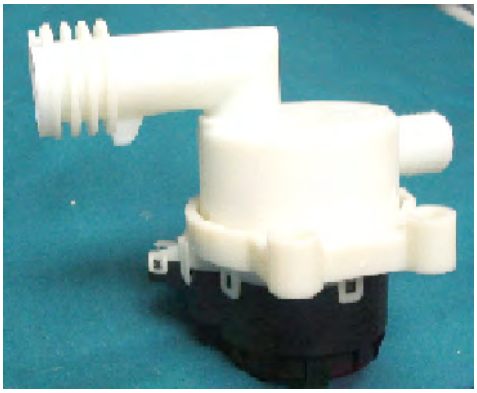

Drain Valve

the electronic control to determine the location of the ball at all times. This valve is supplied as an assembly.

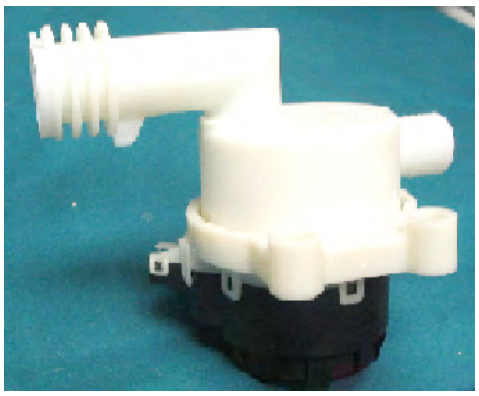

Drain Valve

Servicing the Drain Valve

To repair or replace this valve, the dishwasher needs to be removed from under the counter. The valve can be checked at the control for resistance. The motor resistance is 1.09K ohms. This is checked between the green and green/yellow wires. The cam switch is read between the remaining two green wires for the valve. These will read open when the valve is closed and closed when the valve is open. The valve housing can be removed for cleaning, but care needs to be taken on reassembly that the check ball is in the proper position before reinstalling the housing back on the valve body.

Vent and Drying System

The drying system consists of an upper vent/ blower assembly, a lower blower/duct assembly, and the side air duct. At the dry cycle, the control starts the lower blower before the top vent is opened. This is to keep steam from entering the base of the dishwasher. The top vent opens and the upper blower starts pulling air into the tub from the surrounding cabinet space. The cooler air from outside enters, mixes with internal air, then exits through the left side water inlet into the side air duct. The lower blower pulls air from the base into the lower vent duct where it mixes with the moist air from inside the tub, this mixing of air reduces the amount of visible steam to exit the top left end of the toe kick.

Top Vent/Blower assembly

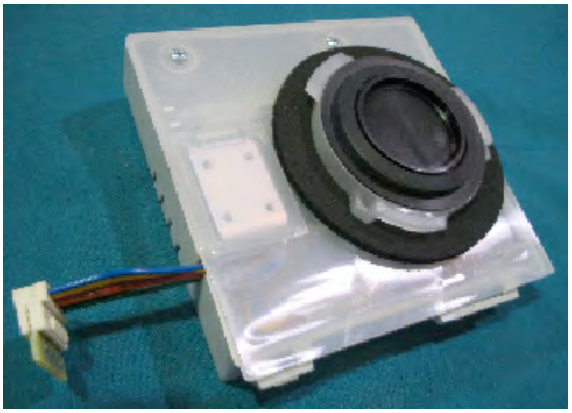

Top Vent/Blower Assembly

Top vent/blower assembly is located in the top right rear corner of the tub. This vent is normally closed, opening in only the dry cycle by the electronic control. The vent is monitored by the control throughout the cycle to insure it stays closed. This assembly contains a vent baffle attached to a solenoid, an optical sensor to monitor the valve, and a blower to draw air into the dishwasher. The vent and blower is replaced only as an assembly. At the beginning of every cycle, the control checks the vent, before the wash motor is started, to insure that the vent is closed. If the control detects that the vent is open, the control will activate the vent solenoid three times in an attempt to re-close the vent. If by the third try the vent is still open, the control shuts down the dishwasher and flashes failure code.

Servicing the Top Vent/Blower Assembly
To replace the top vent/blower assembly, the dishwasher will need to be removed from under the counter. The vent assembly is operated by 12VDC from the electronic control. The control uses an optical sensor in the assembly to monitor the vent baffle and the amperage draw of the blower to determine blower operation. The blower operates with 12VDC with a speed of 3500rpm. This assembly plugs directly into the electronic control. If the control senses a failure in the blower or the vent baffle, it will stop the dishwasher and show a failure code. The dishwasher can not function without this assembly.

Lower Vent Blower
The lower vent blower is mounted to the left side of the dishwasher base. The purpose of this blower is to mix air from the base with the moisture rich air from the tub in the dry cycle. The mixing of the two lessens the appearance of steam from the exhaust opening located at the left front of the base. The lower vent blower is started first to prevent steam from the tub from entering the base.

Servicing the Lower Vent Assembly
The lower blower operates on 12VDC from the electronic control with a speed of 3500 rpm. Like the top blower, its operation is monitored by the control by the amperage draw of the motor. If this blower fails, the control will show a failure code and stop the dishwasher. To service this blower, the dishwasher will need to be removed from under the counter. The blower motor can be removed from the lower duct without removing the duct from the base. The motor will slide out the side of the duct. When installing the new blower make sure the label on the blower faces into the lower air duct.

Racks
The racks on these models are all nylon coated both upper and lower and all models have adjustable upper racks. The models will have differences as to features mostly in the lower rack. The upper rack adjusters mounted to the sides of the rack are adjusted independently of each other. To adjust the rack press out on the adjustment lever then raise and lower the rack as needed.

Lower vent blower

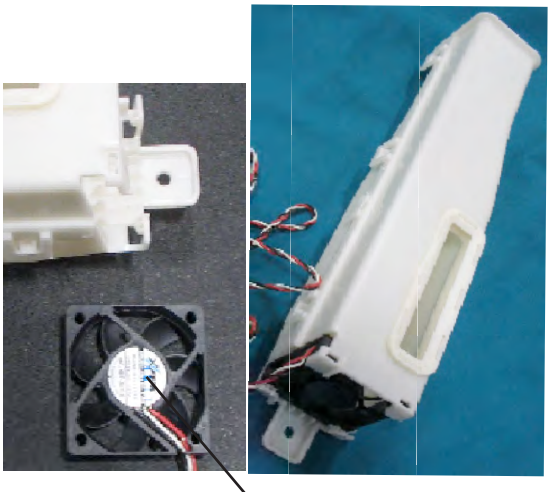

Paper label on blower; face it into the housing

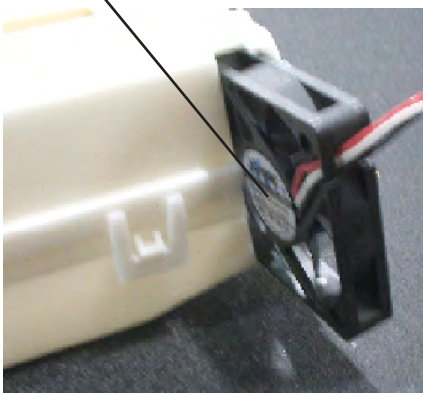

Removing blower from lower air duct

Side air duct bring steam from tub to lower vent assembly

Side rail for upper rack

Front rail end cap closed

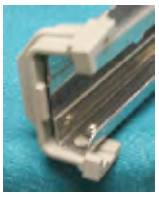

Front end cap open

Back rail stop

Out side of seal

Inside of seal

End mounted into channel

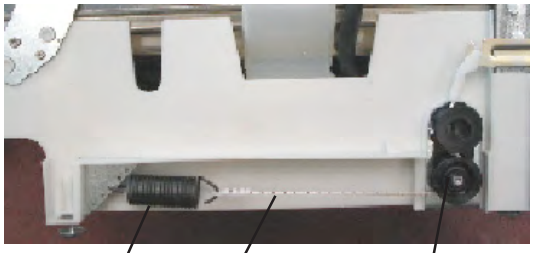

Spring Cable Cable pulleys

Tub Mounted Upper Rack Rollers

The upper rack rollers are mounted to the side of the tub with screws from the outside. To replace these rollers, the dishwasher will need to be removed from under the counter. The rollers, top and bottom, are on a common mount and the front and rear are the same.

Rails

The rack rails are stainless steel and slide between the rollers mounted to the tub. Each rail has stops on the front and rear. The rear stop is installed from the top down and locks in place. The front stops are on a pivot. To install or remove the upper rack, the stop is pivoted to the outside. This frees the rail for the rack to be removed.

Door Seal

The door seal seals the area between the inner door panel and the tub to prevent leaks. There are two seals, one mounted onto the bottom of the inner door panel, the other pressed into a channel and mounted around the front of the tub.

Installing the Door Seal

To install the tub mounted seal, first determine the inside and outside of the seal. The extended end on the seal goes to the outside. Start by finding the center of the gasket and press this into the channel at the strike. Next take the gasket to the top corners and press into the channel. Continue to the bottom on either side. Work up from the bottom pressing while pressing the seal into the channel working towards the center. Close the door and press it in place.

Door Hinge/Door Spring Cables

The door hinge mounts the door to the tub. The hinge is part of the side frame and not a replaceable part. The door spring and cable are to protect the door from a sudden fall that could damage the door and to assist in raising the door from the full open position. The design of the cable and springs allow the door to stay at any desired angle without support.

To Install the Door Springs and Cables

The dishwasher will need to be pulled from under the counter top to service the door springs and cables. To install the cable, place the hinge end onto the hinge, next run the cable down the back of the top pulley, then weaving the cable between the pulleys and under the lower pulley attach the spring to the cable. The opposite end of the door spring mounts into an adjustment plate in the base.

Before Removing the dishwasher

All of the electrical components for this dishwasher are wire directly to the electronic control which is mounted in the tub base behind the toe kick. Diagnosing problems with the electrical components can be accomplished without removing the unit from under the counter. Remove the toe kick from the base of the unit to gain access the electronic control. The control has a row of LED's on the top left side used to assist with diagnosing component failures.

Resistance checks for all components can also be done at the control. Remove the two mounting screws for the control and pull the control forward, remove the guard holding the plugs to the control. The plugs are color coded and very in size to prevent miss wiring.

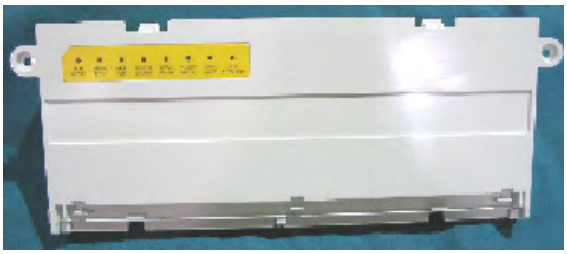

Removing dishwasher

The design of this dishwasher will require removing the unit from under the counter to replace many of the functional parts. Before removing the dishwasher please read the warning below.

Warning

When servicing stainless steel products extra care needs to be taken for your safety. Edges on panels and sides of tubs can be very sharp. Hand and arm protection needs to be worn to prevent cuts.

Warning

Before removing dishwasher from under the counter make sure the power to the unit has been disconnected and the water has been turned off. Try and remove as much water from the tub as possible because the dishwasher may need to be placed on it back for service

Floor protection

When removing a dishwasher from under a counter have floor protection available for the legs as the unit is removed. Remove the screws mounting the dishwasher to the side cabinets. If possible raising the feet into the base will make removal from under the counter easier. A bucket may be needed when removing the drain hose to catch water left in the hose.

If the dishwasher is to placed on its back make sure you have a protective pad for the floor

After the dishwasher has been removed from the cabinet and placed on its back servicing components in the base require removing clamps and hoses in most cases. If the wash motor or drain pump are replaced make sure the rubber mounts are in place before motors are reinstalled. See the figure to locate the different parts under this unit.

Bottom of the Dishwasher

Below is a picture of the dishwasher on its back with the base cover removed to show the location of the different parts. To replace any of these parts, with the exception of the water valve, will require the same process.

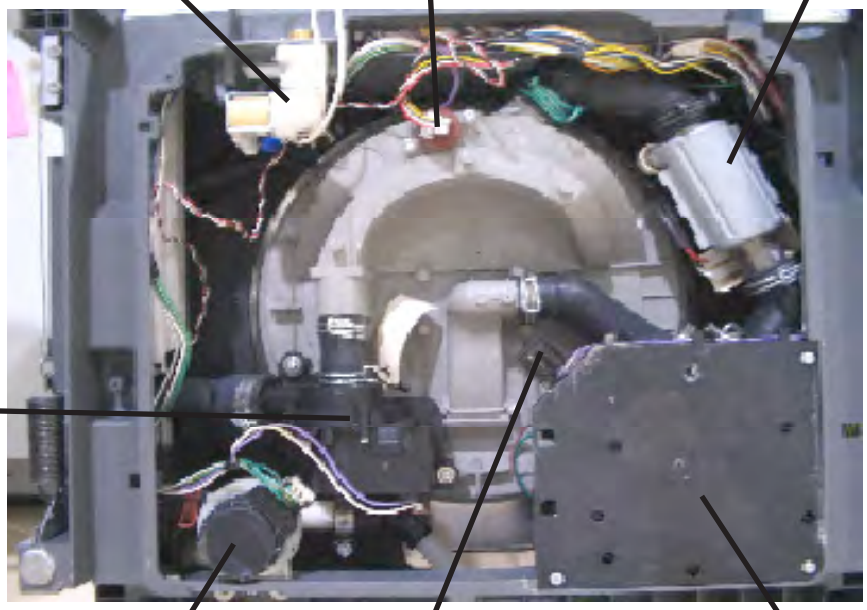

Follow through

After service has been completed check all hoses and clamps to insure they are in the proper position and clamps are tight before base cover is reinstalled.

Make sure the dishwasher is level before installing the mounting screws into the side cabinets. Check the drain hose to be sure it is not kinked and the high loop is installed properly in the sink cabinet. Check for water leaks at the water valve and under the sink before power is applied.

Fully check unit after repair has been completed for proper operation.

Problem	Description	Cause	The fix	Possible parts needed
Dishwasher will not come on	No lights on top of console	No power to dishwasher	Check wire connections at j-box	
			Check power to unit from house power supply	
	No lights on top of console	Dead keypad assembly	Check wire connections both at keypad and the electronic control.	
			Check power at the control from the j-box	Electronic control
			Kill power to unit and re power looking for lights or failure code	Keypad assembly
	No lights on top of console	Door switch not opening	Lights on console go out when door is closed if the door switch does not open the lights may not come on.	Door latch assembly
	No lights on top of console	User may have locked out display	Press and hold left arrow on EWDW6505G for 5 seconds to relight console lights	
	Keypad lights up but no dishwasher operation	Customer not programming unit properly	Instruct customer in operation of dishwasher	
	Keypad lights up but no dishwasher operation	Check door switch operation	If the door switch is not opening and closing properly the control may not know the door is closed to start unit.	Door latch assembly
	Keypad lights up but no dishwasher operation	Wires loose on control	check all wire to the electronic control.	
		Electronic control	If control is wired properly and not starting unit the electronic control may need replaced	Electronic control
	Keypad lights up but no dishwasher operation	Key pad not programming control	Replace key pad	Keypad assembly
Will not fill	Water not entering the tub	Water not turned on	Check water supply to dishwasher	
	Water not entering the tub	Dishwasher not programmed properly	Instruct customer in operation of dishwasher	
	Water not entering the tub	Check fill hose from valve to left side air duct	Check hose to be sure it is not kinked or pinched off	Fill hose
	Water not entering the tub	Stopped up water valve	Check screen in water valve for debris, clean the valve	Water valve
	Water not entering the tub	Water valve not opening	Check float and float switch for proper operation	Float or float switch
		Water valve not opening	Check wire at electronic control and at water valve to make sure both are connected properly.	
		Water valve not opening	Check for power from control to valve	Electronic control Water valve
Wash motor not operating	Wash motor not operating	Dishwasher not programmed properly	Instruct customer in operation of dishwasher	
	Wash motor not operating	No power to wash motor	Check electrical connections at control and wash motor	
			No power at control to wash motor	Electronic control
	Wash motor not operating	Power to wash motor not running	Check wash pump for blockage clean wash pump	
			Check wire to running capacitor	Running capacitor
			Wash motor turns free not running	Wash motor
Wash motor stops in cycle	Runs and stops	Dishwasher operation	Instruct customer in operation of dishwasher	
	Runs and stops	Motor loosing power	Check wire connection at control and motor	
	Runs and stops	Debris in wash pump stalling motor	Clean wash pump	
	Runs and stops	Motor shutting down on overload	Replace motor	Motor
	Runs and stops	Control not receiving proper input from tachometer	Replace motor	Motor
	Runs and stops	Control not interpreting input from tachometer	Replace control	Control

Problem	Description	Cause	The fix	Possible parts needed
Dishwasher operates but water not getting hot	Water in the tub is cool	Check incoming water temperature	Recommend incoming water temperature is 120°F Water needs to be run at sink closest to dishwasher before starting a wash cycle	
		Check incoming water temperature	Dishwasher plumbed from water heater check heater setting.	
	Water in the tub is cool	heater is not operating	Check cycle chart to power up of heater	
	Water in the tub is cool	heater is not operating	Check disconnect plugs at heater and control	
		heater is not operating	Check power at control to heater DO NOT OPERATE HEATER WITH OUT WATER IN THE TUB	
		heater is not operating	Check power at heater DO NOT OPERATE HEATER WITH OUT WATER IN THE TUB	
Dispenser is not opening	Cover for the detergent cup is closed at end of cycle	How far into the cycle before checking cover	Cover opens in the main wash section of the cycle	
	Cover for the detergent cup is closed at end of cycle	Cup was wet when detergent was added to dispenser	water in the cup can cause detergent to cake and hang up cover	
		Linkage not moving	Check alignment of dispenser linkage	
		Wax motor not extending	check operation of wax motor with power applied	Dispenser
	Cover for the detergent cup is closed at end of cycle	No power to dispenser	Check connections to dispenser and at control	
	Cover for the detergent cup is closed at end of cycle	No power to dispenser	Check power at control and at dispenser	
Dishwasher will not pump out	Water remains in the tub	House drain stopped up	Remove drain hose from house drain and check for blockage.	
		Drain hose stopped up	Remove drain hose and check for restriction	
		Sump stopped up with debris	Remove sump lift out filter cover and clean sump	
	Water remains in the tub	Drain valve stopped up with debris	Remove and clean valve	
		Drain pump stopped up	remove and clean drain pump	
	Water remains in the tub	Drain valve not opening	Check wire connections to valve and at control	
		Drain valve not opening	Check for power at drain valve	Drain valve
			No power to the drain valve	Control
	Water remains in the tub	Drain valve not opening	Check wire connections to drain pump and at control	
		Drain valve not opening	Check for power at drain pump	Drain pump
			No power to the drain pump	Control
Drain pump not running	See Dishwasher will not pump out			
Cycle not advancing	Wash cycle running a very long time	Check water temperature	Incoming water needs to be 120°F	
		Cycle selection	Instruct customer in operation of dishwasher	
		Loading the dishwasher	a very dirty load may have the wash time extended by the turbidity sensor	
	Wash cycle running a very long time	Control timing	select wash cycle and check cycle with service data sheet to check timing of control	
		Loose wire connections at control	Check wire connections a control	
		Control not advancing as programmed	Replace control	Control

Problem	Description	Cause	The fix	Possible parts needed
Water is siphons from the tub	Water is not staying at the proper level in the tub	The drain valve is not closed properly	Check and clean the drain valve	
		The drain valve is not closed properly	Check power to the drain valve from the control to make sure the valve is closed	
		The drain valve is not closed properly	Check the motor of the drain valve for resistance	Drain valve
		Drain hose Not installed properly	The drain hose needs to loop all the way to the underside of the counter top	
		Drain hose Not installed properly	The drain hose should not go under the floor with out an air gap mounted in the counter top	
Detergent is still in the detergent dispenser	At the end of the cycle there is still detergent in the dispenser	The cover for the dispenser did not open	See Problem :Dispenser is not opening	
	The cover opened but there is still detergent in the dispenser	The detergent was added when the cup was wet.	Water can cause detergent to cake and not dissolve properly. Close the cup cover before adding fresh detergent to the cup.	
	The cover opened but there is still detergent in the dispenser	The water was not hot enough to dissolve the detergent	See Problem: Dishwasher operates but water not getting hot	
	The cover opened but there is still detergent in the dispenser	Did the dishwasher fill with the proper amount of water	See Problem :Will not fill	
	The cover opened but there is still detergent in the dispenser	Detergent not handled or stored properly	Make sure detergent id fresh and stored in an air tight container in a dry location	
Dishwasher only fills and drains	Dishwasher does not perform all functions in the chosen cycle	Check cycle criteria found in the Service data sheet.	The cycle matrix is different for each cycle and the control can change the cycle with input from sensors	
	Can not hear the wash motor running	The wash motor may not be operating	See Problem: Wash motor not operating	
Not drying	At the end of the cycle dishes are not dry	Type of dishes that make up the load	Plastic items do not dry well in dishwashers	
		Dishwasher installed in closed cabinetry	Ample outside air is needed for intake of vent system	
	At the end of the cycle dishes are not dry	Incoming water not hot enough	Check incoming water temperature needs to be at least 120°F	
		The rinse aid dispenser is empty	Rinse aid is needed to speed evaporation of water from the dishes. Full rinse aid section of the dispenser. Check setting of dispenser and increase setting to aid in drying.	
		Rinse aid is not being dispensed in the cycle	See Problem: Dispenser is not opening	
	Upper vent assembly			
	At the end of the cycle dishes are not dry	Vent not opening	Check vent for restrictions top right rear of tub	
		Vent not opening	Check connections at vent and at control	
		Vent not opening	Check power to vent at control	Vent assembly, control
	Base vent assembly			
	At the end of the cycle dishes are not dry	No exhaust air opening	Make sure opening for air exhaust in the toe kick is open	
	At the end of the cycle dishes are not dry	Vent blower not operating	Check vent for restrictions left side of base	
		Vent blower not operating	Check connections at blower and at control	
		Vent blower not operating	Check power to blower at control	Blower control

Problem	Description	Cause	The fix	Possible parts needed
Vents are not operating properly	Upper vent and blower assembly is not operating	Vent is closed until the dry cycle, determine proper point in the cycle	Check Service data sheet to determine point in cycle that the vent is activated	
		Vent not opening	Check vent for restrictions top right rear of tub	
		Vent not opening	Check connections at vent and at control	
		Vent not opening	Check power to vent at control	Vent assembly, control
		Vent not closing	Check vent for obstructions and clean	
	Lower blower assembly is not operating	Blower not running	Check blower for obstructions	
		Blower not running Blower not running	Check connections at blower and at control Check power to vent at control	Blower control
Dishwasher is showing a code in the display	Code can be displayed to inform the customer of a condition in the product		Refer to information in the Owners guide, service data sheet and service manual for understanding the code	
Lights flashing	This is to inform the customer of a condition in the product		Reset the control by cycling power to the product	
	A failure has occurred in the product	See Problem: Dishwasher is showing a code in the display	Reset the control by cycling power to the product	
		A wiring problem to the dishwasher	Check wire connection at the j-box	
		A wiring problem in the dishwasher	Check all connection at the control	
Can not select a wash cycle or options	Customer tries to select a cycle or option and no response	Key pad is not lighting up	Check connections at keypad and control	
		Customer is trying to select an option not available for the wash cycle	Refer customer to Owners manual	
		See Problem: Dishwasher will not come on		

Installation:

1. Remove Toe and Kickplate with a #2 Phillips Screw Driver
2. Remove cover to the JBox with a #15 Torx
3. Install the provided Romex Connector in the JBox.
4. Replace the JBox cover.
5. Connect the Drain Hose to the back of the unit. Use the Cork and Worm Clamp provided to plug the ends of the drain hose.

(connect white/white, black/black and green/green)

(end of drain hose)

Demo Mode is ready to be activated:

To activate the Demo Menu hold down the Select Option and Right Arrow keys for 5 seconds within the first 15 minutes after powering up.
Press the Arrow key until the **DEMO** option appears
Press **SET** to turn On the Demo feature. **DEMO ON** will appear on the display
You ***MUST*** exit the Demo menu in order to run the unit in the **DEMO MODE**, simply press and hold Select Option and Right Arrow keys for 5 seconds.

6. The display will flash "Control Demo". This lets service/techline know to deactivate the demo mode if the unit reaches a customer's home with the demo mode activated. The unit can be hooked up while still in the Demo Mode simply follow instructions below to Deactivate Demo Mode.
7. "Welcome" is displayed and control is activated to select cycles, options, delay start, settings etc. When the user presses the start of the display, they will not be prompted to close the door. Instead the display will flash "Washing", "Drying" and "Clean". When "Clean" is displayed, the blue beam should cycle on and remain active for 10 seconds. If the user presses start or closes the door, then all activation should reset and return to step 6. If delay start is selected, then the display should countdown in 1 second intervals from the delay time selected.
8. After the "Control Demo" is activated, the user interface should default to step 6 each time the door is opened until the demo mode is deactivated. If any key is pressed, then it should also default to step 6.
9. If a power failure occurs, then the unit will remain in the demo mode. This prevents having to setup all the products in the store again after a power failure.
10. After 10 seconds of inactivity with the door open, the user interface should become inactive. To reactivate, simply press any key. The inactivity period should be active time that the door is open except when start has been pressed to run the "Sound Demo".
11. If the user wishes to just watch the control demo at any time without selecting cycles, options, etc. then the control can be activated by pressing the start key. The start key memory should be active to repeat the last setting selected, and follow with the washing, drying, clean and blue beam as outlined in step 7.

To Deactivate the "Demo Mode"

Demo menu is invoked by holding the Select Option and Right Arrow keys for 5 seconds.
Arrow to the **DEMO ON** option in the demo menu.
Press **SET** to turn off the demo feature. **DEMO OFF** will be displayed.
At this time, all outputs are operational.
To return to normal operation, press and hold Select Option and Right Arrow keys for 5 seconds.

Demo Mode

Installation for Sound Demo

Insure that the CORK has been installed before pouring the 1-1.25 gallons of Windshield Wiper Fluid inside Demo Unit.

Sound Demo Mode is ready to be activated:

Demo menu is activated by holding the Select Option and Right Arrow keys for 5 seconds within the first 15 minutes after power up.
Arrow to the **SOUND** option in the demo menu
Press **SET** to turn ON the Sound Demo feature. **SOUND ON** will be displayed.
At this time, all outputs are shut off except the user interface, wash pump, door latch and blue end-of-cycle beam/indicator.
You ***MUST*** exit the demo menu in order to run the unit in the **DEMO MODE**, simply press and hold Select Option and Right Arrow keys for 5 seconds.

1. The display will flash "Sound Demo"
   "Sound Demo" refers to sound demo mode so that service/techline know to deactivate the demo mode instead of replacing the control if the unit reaches a consumer's home with demo mode activate.
2. "Welcome" is displayed and control is activated to select cycles,
   options, delay start, settings etc. When the user presses the start pad and closes the door, we will not run the cycle selected. Instead it will run the quietest cycle available as determined by Engineering. If delay start is selected, then the display should countdown in 1 second intervals from the delay time selected. This cycle should run for 2 minutes to demonstrate the sound of the unit. At the end of 2 minutes, the blue beam should cycle on and remain active for 10 seconds. The unit must never initiate a pump out sequence.
3. If a power failure occurs, the unit will remain in the Sound Demo
   Mode. This prevents water inside the cavity from being pumped on the showroom floor accidentally and the time needed to setup all the products in the store again after a power failure.
4. After 10 seconds of inactivity with the door open, the user interface should become inactive. To reactivate, simply press any key. The inactivity period should be active any time that the door is open except when start has been pressed to run the sound demo.
5. If the user wishes to just enter the sound demo at any time without
   Selecting cycles, options, etc. then the wash cycle can be activated by pressing the start key. The start key memory should be active to repeat the last setting selected, but the unit will still run the "quiet" wash cycle.

To Deactivate the "Sound Demo"

Demo Mode is activated by holding the Select Option and Right Arrow keys for 5 seconds.
Arrow to the **SOUND ON** option in the demo menu.
Press **SET** to turn OFF the demo feature. **SOUND OFF** will be displayed.
At this time, all outputs are operational.
To return to normal operation, press and hold Select Option and Right Arrow key for 5 seconds.

Error Codes for Models with Displays

Model	Error code shown in the display or read out	Error Type	Reason
EWDW6505G	Error 1	Leak Detector	Water has been detected under the tub
EWDW6505G	Error 2	Thermistor	When thermistor/ turbidity module fails
EWDW6505G	Error 3	Wash pump	Dead wash motor
EWDW6505G	Error 4	Drying Damper	Dead drying damper
EWDW6505G	Error 5	Upper fan	The control has not received the proper fan speed feedback from the upper fan
EWDW6505G	Error 6	Lower Fan	The control has not received the proper fan speed feedback from the lower fan
EWDW6505G	Error 7	Drain valve	In the drain mode the control has not received the proper position feedback from the drain valve
EWDW6505G	Error 8	Tactile or Touch switch	The control has verified a switch on the user interface is bad or shorted
EWDW6505G	Error 9	Communications	A communication failure between the user board and the power supply or main control
EWDW6505G	Error 10	Main relay	Failure in the main power relay
EWDW6505G	Error 11	Drain valve	Time out before finding a state for the drain valve
EWDW6505G	Error 12	Drain valve	The drain valve is running when it should be off this could be a shorted component
EWDW6505G	Error 13	System failure	The control has lost control of the unit

Model	Error code shown in the display or read out	Error Type	Reason
EIDW6305G	Alternating 'Er' + 01	Leak Detector	Water has been detected under the tub
EIDW6305G	Alternating 'Er' + 02	Thermistor	When thermistor/ turbidity module fails
EIDW6305G	Alternating 'Er' + 03	Wash pump	Dead wash motor
EIDW6305G	Alternating 'Er' + 04	Drying Damper	Dead drying damper
EIDW6305G	Alternating 'Er' + 05	Upper fan	The control has not received the proper fan speed feedback from the upper fan
EIDW6305G	Alternating 'Er' + 06	Lower Fan	The control has not received the proper fan speed feedback from the lower fan
EIDW6305G	Alternating 'Er' + 07	Drain valve	In the drain mode the control has not received the proper position feedback from the drain valve
EIDW6305G	Alternating 'Er' + 08	Tactile or Touch switch	The control has verified a switch on the user interface is bad or shorted
EIDW6305G	Alternating 'Er' + 09	Communications	A communication failure between the user board and the power supply or main control
EIDW6305G	Alternating 'Er' + 10	Main relay	Failure in the main power relay
EIDW6305G	Alternating 'Er' + 11	Drain valve	Time out before finding a state for the drain valve
EIDW6305G	Alternating 'Er' + 12	Drain valve	The drain valve is running when it should be off this could be a shorted component
EIDW6305G	Alternating 'Er' + 13	System failure	The control has lost control of the unit

Wiring Diagram

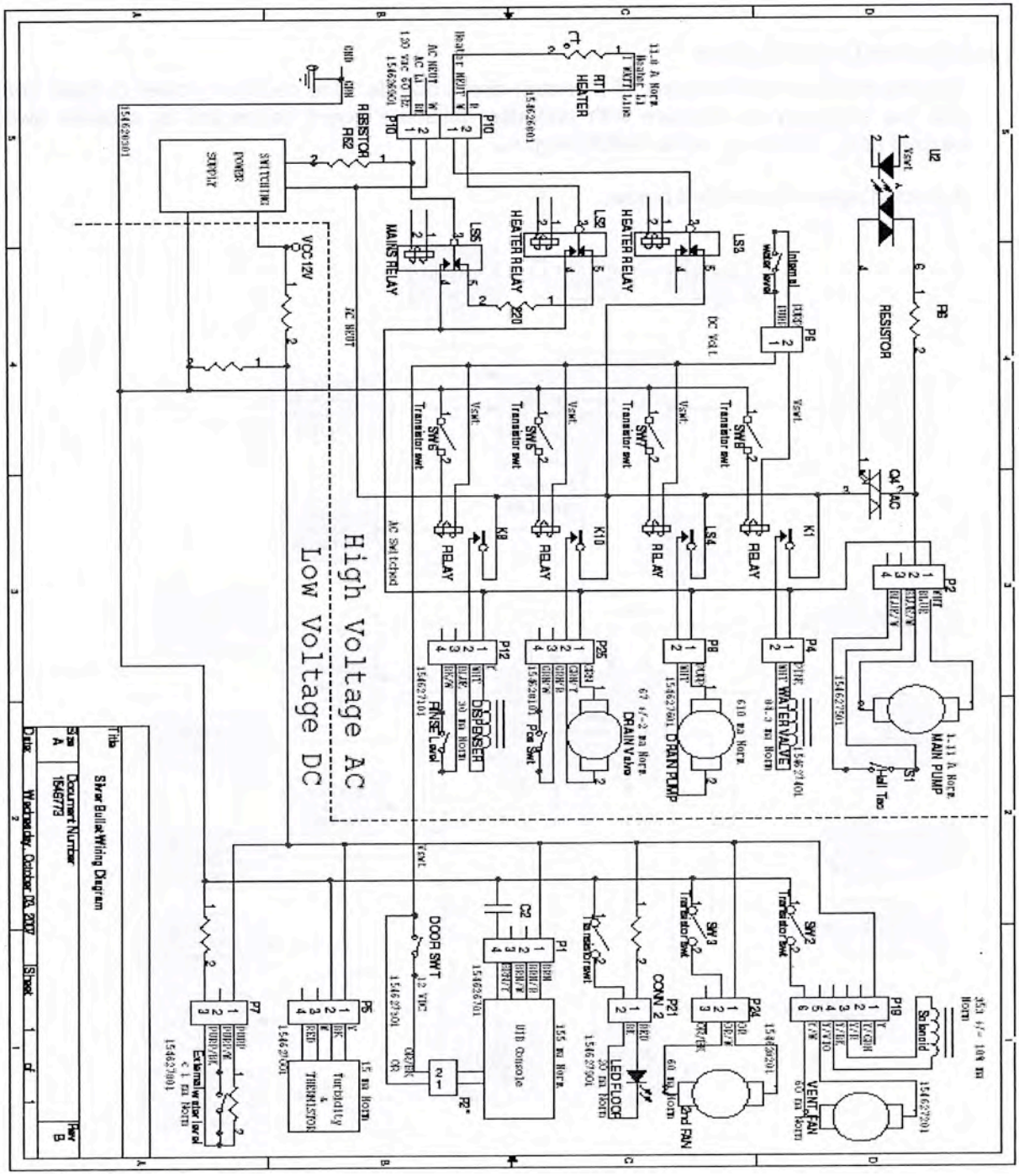

Hardware Organization

The electronic control consists of 2 control circuit boards. One common power or base board has the capability to interface with one user interface board connected to a tactile switch keypad or to a touch sensitive switch keypad.

A block diagram is provided below.

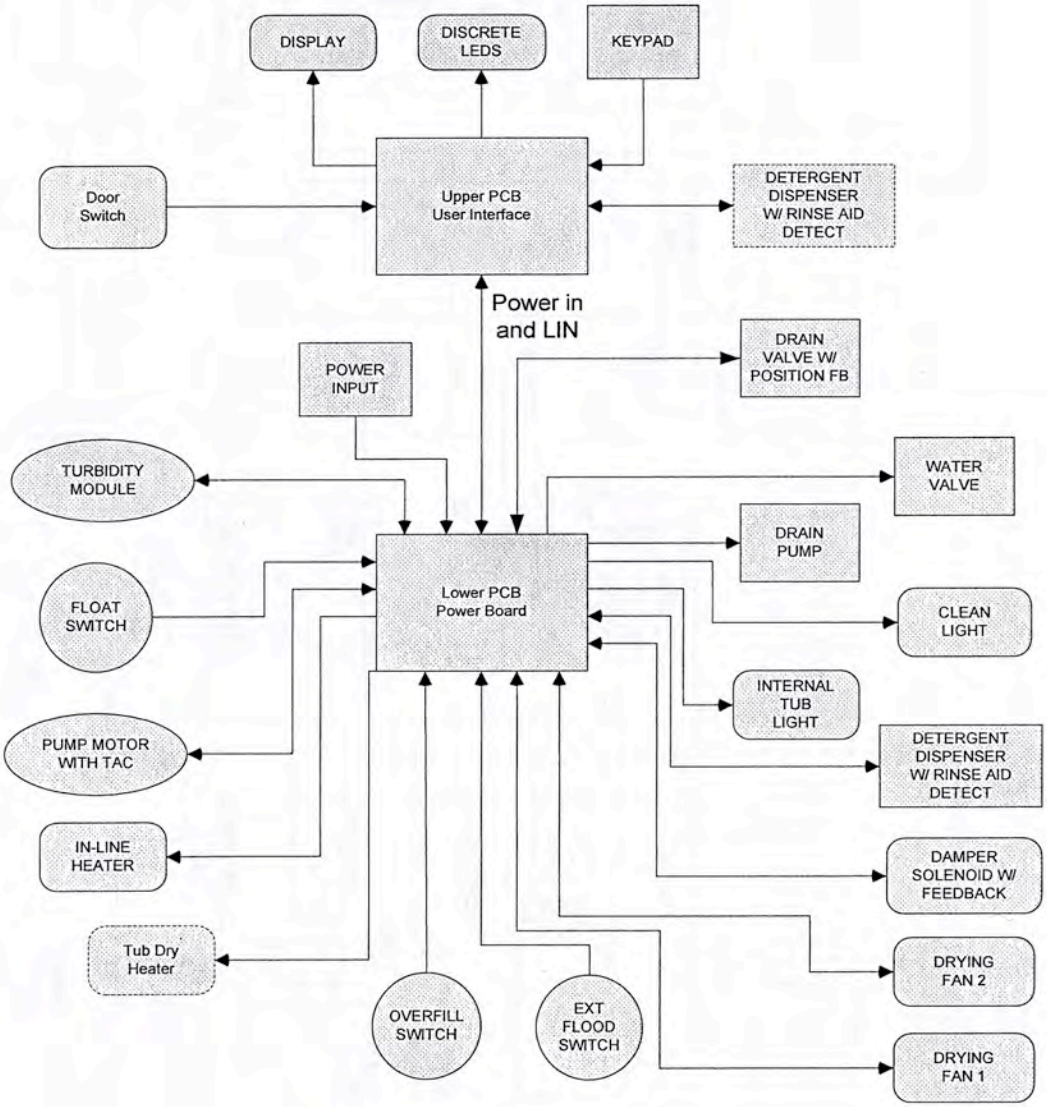

Demo Mode - Water Flow - Sabbath Mode

Demo Mode - Demo menu is invoked by holding the Select Option and Right Arrow keys for 5seconds within the first 15 minutes after power up. Arrow to the DEMO option in the demo menu. Press the SET to turn ON the demo feature. DEMO ON will be displayed. While in the demo menu, press SET to turn OFF the demo feature. To return to normal operation, press and hold Select Option and Right Arrow keys for 5 seconds.

Water Flow Diagram

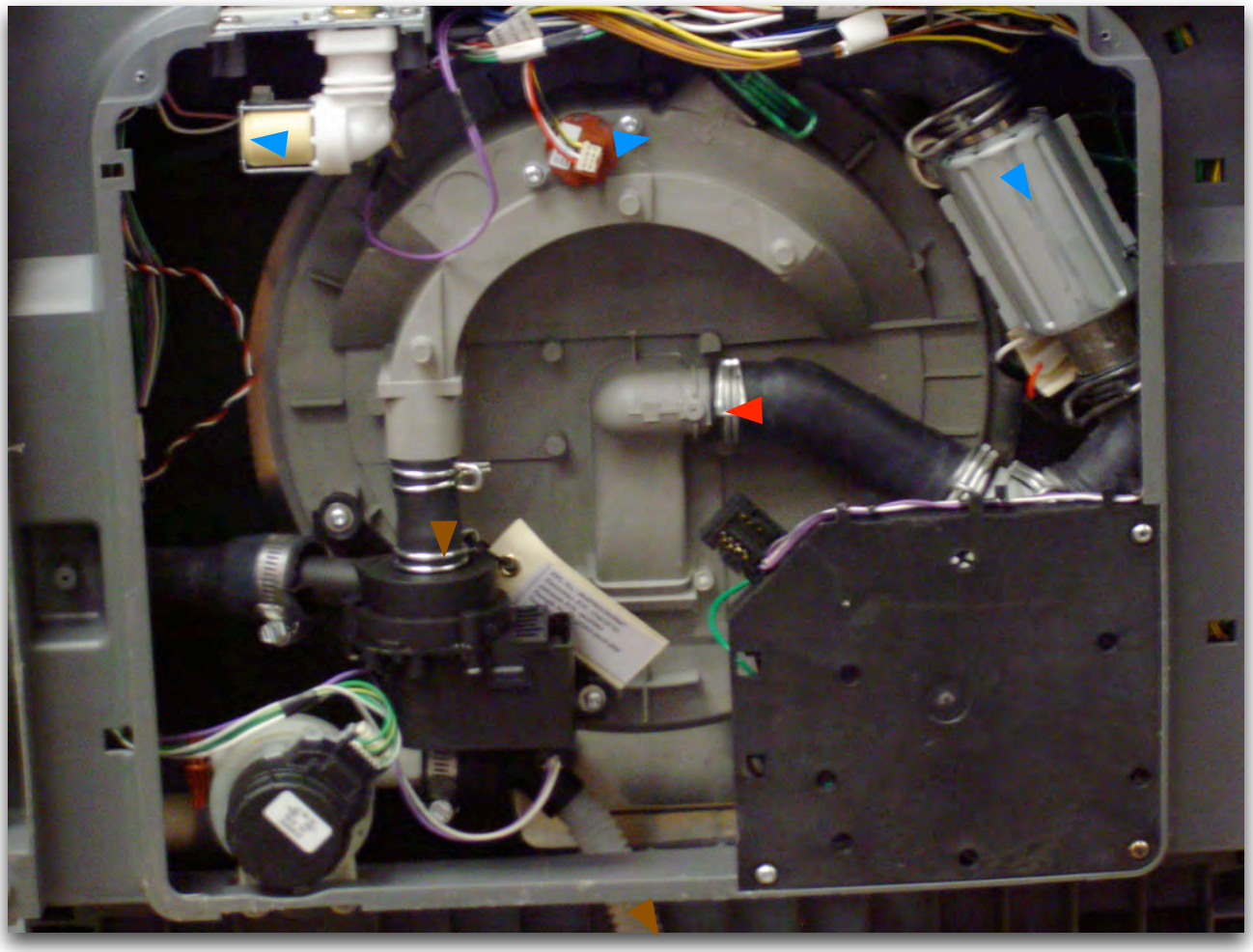

Sabbath Mode for Model EWDW6505G

The Sabbath feature removes all lighted icons from the display. To activate the Sabbath feature, touch and hold the left arrow icon for ten seconds. To cancel the Sabbath mode, again touch and hold the left arrow icon for ten seconds.

Electrolux

SIDE-BY-SIDE REFRIGERATOR PRODUCT TRAINING SECTION

MODELS- EW23CS65G , EI23CS55G ,
EW26SS65G , EI26SS55G ,
EW23SS65G , EI23SS55G ,

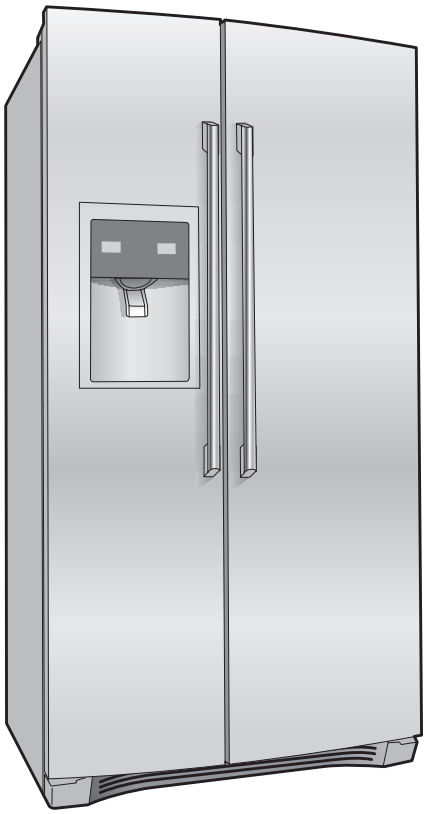

Electrical Grounding

All refrigerators are equipped with a power supply cord incorporating a three-prong grounding plug and a ground wire which is attached to the refrigerator cabinet for protection against shock hazard. Each electrical component is either cabinet mounted or connected through a ground wire to the cabinet to complete the ground. Certain components, such as defrost timers, may be double insulated and do not require a ground wire.

Ensure the electrical wall receptacle is of the three prong type and is properly grounded in accordance with the National Electrical Code and/or local codes.

Compressor Electrical Components and Circuits on Models with Standard Compressor

The new series of very high efficiency compressor is equipped with all new electrical components consisting of a solid state PTC relay with a thermally operated overload protector, and a run capacitor.

Solid State Relay

The solid state relay has no moving parts. It consists of a PTC resistor mounted in a plastic case with appropriate terminals. PTC (Positive Temperature Coefficient) simply denotes a resistor which increases in resistance as its temperature is increased. The self-heating PTC resistor used in the solid state relay has the unique characteristic of changing from low to very high resistance very abruptly, thus serving as an on-off switch. (See Figure C1.)

The solid state relay plugs directly onto the compressor start and run terminals. Relay terminals 1, 2, and 5 are connected within the relay, as are terminals 3 and 6.

A run capacitor is connected to relay terminals 2 and 3, so it is connected in parallel with the PTC resistor. One side of the 120 VAC power is connected to relay terminal 1. The other side of line is connected to the overload protector. (See figure C1.)

To Check/Replace Relay

1. Disconnect electrical supply to refrigerator.
2. Remove bale wire holding relay to compressor.
3. Remove relay assembly from compressor. (See Figure C2.)

P.T.C. Relay With Run Capacitor

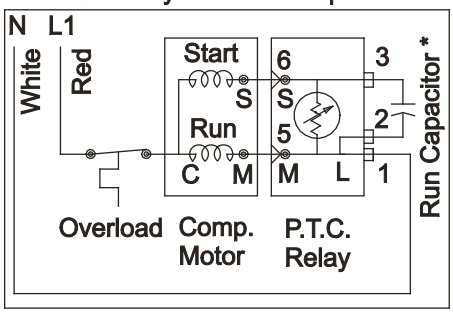

* Capacitor Is Only Used With Some P.T.C. Models.

Figure C1

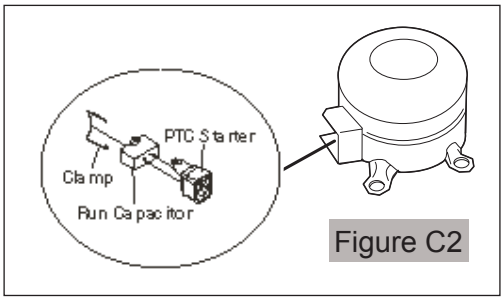

Figure C2

4. Use small, flat-bladed screwdriver to disconnect leads to relay assembly.
5. Use flat headed screwdriver to gently pry capacitor from relay assembly.
6. Use ohmmeter to check resistance between terminals 5 and 6. Resistance should be 3 to 12 ohms at normal room temperature. Shorted relay will read 0 ohms. Open relay will read very high or infinite resistance.
7. If ohm readings are out of range, replace relay.
8. Reverse this procedure to re-assemble.

NOTE

When replacing leads to the PTC relay, ensure locking tabs snap into terminal.

Overload Protector

The overload protector is completely thermally operated. It will open from excessive heat or current. Unlike prior overloads, the internal bi-metal is not self-heating, and is not a part of the electrical circuit. The overload has a small built-in coil heater that is in series with the compressor start and run windings (See Figure C1).

To Check/Replace The Overload Protector

1. Disconnect electrical supply to refrigerator.
2. Remove bale wire holding relay to compressor.
3. Remove relay assembly from compressor.
4. Use flat headed screwdriver to gently pry capacitor from relay assembly.
5. Use small, flat-bladed screwdriver to disconnect leads to relay assembly. (Note: On some models you will have to remove bale wire and cover, to gain access to relay and overload protector.)
6. Use ohmmeter to check resistance between tab terminal and female pin terminal. Overload protector should have less than 1 ohm of resistance at normal room temperature.
7. If ohm readings are out of range, install new Starter/Overload Assembly.

NOTE

The Overload Protector is built into the Starter Overload Assembly.

8.Reverse this procedure to re-assemble.

NOTE

When replacing leads to the PTC Relay, ensure the locking tabs snap back into the terminal.

Run Capacitor

The run capacitor has permanently attached terminals which are connected to relay terminals 2 and 3.

NOTE

Some models are not equipped with a Run capacitor.

To Check/Replace The Run Capacitor

1. Disconnect electrical supply to refrigerator.
2. Remove bale wire holding relay to compressor.
2. Use small, flat-bladed screwdriver to disconnect leads to relay assembly.
3. Use flat-bladed screwdriver to gently pry capacitor from relay assembly.
4. Discharge capacitor by shorting across terminals with 500K (1 watt) resistor for one minute.
5. Use ohmmeter set on the **"Ohms times 1000"** scale (if available), to check resistance across capacitor wire terminals.
   - The needle should jump towards zero ohms and quickly move back to infinity.
   - If the needle does not move, the capacitor is open.
   - If the needle reads a constant value at or near zero ohms, the capacitor is shorted out.
   - If the needle jumps toward zero and then moves back to constant high resistance (not infinity), the capacitor has a high resistance leak.
6. If ohm readings are out of range, replace capacitor.
7. Reverse procedures to re-assemble.

Compressor Start Circuit

When the compressor circuit is first energized, the solid state relay has low resistance (3-12 ohms), and both the run and start windings are energized to start the compressor. The run capacitor is being bypassed by the relay, and it has a minor function during compressor starting (See Figure C3).

P.T.C. Relay With Run Capacitor

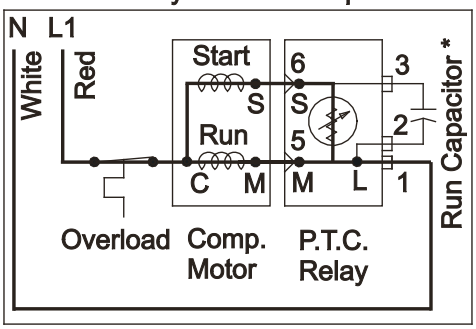

* Capacitor Is Only Used With Some P.T.C. Models.

Figure C3

Compressor Run Circuit

When the self-heating solid state relay has reached sufficient temperature, it will abruptly change from low resistance (3-12 ohms) to very high resistance (10-20K ohms) and, in effect, switches off the start windings.

The relay no longer shunts the run capacitor. The run capacitor is now in series with the start windings. The only purpose of the run capacitor is to improve compressor operating efficiency, which it does by correcting the power factor of the compressor motor (See Figure C4).

P.T.C. Relay With Run Capacitor

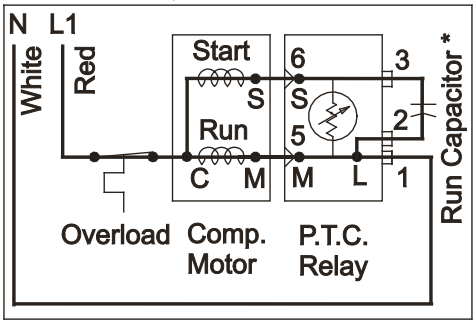

* Capacitor Is Only Used With Some P.T.C. Models.

Figure C4

Compressor Operating Characteristics

- When the compressor electrical circuit is energized, the start winding current causes the relay to heat and switch off the start winding circuit.

NOTE

The relay will switch off the start winding circuit even though the compressor has not started (as when attempting to re-start after momentary power interruption).

- The overload protector is designed and calibrated to open the compressor electrical circuit with locked rotor run winding current on.
- With an open relay, the compressor will not start since there is little or no current to the start windings. The overload protector will open due to high locked rotor run winding current.
- With a shorted relay or capacitor, the compressor will start, and the overload protector will open.
- With an open or weak capacitor, the compressor will start and run. The compressor, however, will be operating at reduced efficiency of energy usage.

Compressor Electrical Check

If the compressor will not run, make a voltage check across the power lead terminals on the PTC Relay. (See Figure C4.)

The voltmeter should show line voltage if the thermostat knob is in normal operating position and not in the OFF position. If this check does not show a live circuit, the control thermostat and defrost timer wiring should be checked for loose and/or broken connections.

A control thermostat check can be made by using a piece of wire as a temporary bridge across two thermostat terminals. If the compressor starts and runs with the bridge, the control thermostat is at fault and should be replaced.

If the voltage check shows power supply at the PTC Relay terminals, use a test cord to check the compressor.

If the compressor does not start and run with the test cord, check the line voltage to see if there is more than 10% variation from the rated voltage. If voltage is correct and the compressor will not start and run, replace the compressor.

If the compressor starts and runs with the test cord, replace the PTC Relay.

Compressor Electrical components and Circuits for Models with Variable Capacity Compressor

The new series of very high efficiency compressor is equipped with a new electrical power input electronic control to replace the standard start package.

The Power Input Electronic Control (Inverter)

The solid state power input electronic control contains:

1. Low voltage power supply.
2. EMI Filter and Voltage Suppressor Circuit.
3. AC-DC Converter
4. Three-phase Inverter Bridge
5. Serial communication.
6. Microcontroller or DSP Controller Protection.
7. Voltage Sensor

Inverter

The Inverter replaces the Solid State Relay, the Overload Protector and the Run Capacitor. The Inverter has 115 Volt AC current to it all the time the refrigerator is connected to line voltage. It picks up 115 Volts directly from the service cord. It receives a 2 to 5 volt DC signal from the main control board located under the refrigerator in the left front opening behind the bottom grill.

To Check/Replace the Inverter

1. Use your Multimeter or a good volt meter set on 300 volt AC to test the voltage going into the inverter from the product service cord. Do not disconnect the molex connector. Slide the probes from your meter along side the wires until you connect with the terminal itself. You should read 115 Volt AC + or - 10%. If less check service cord and supply voltage.
2. Set your meter to DC on a scale as close to 10 Volt as available. Do not disconnect the molex connector. Slide the probes from your meter along side the wires until you connect with the terminal itself. You should read between 2 and 5 Volt DC. If voltage is outside the 2 to 5 Volt DC range replace the main control board.

VCC Control Block Diagram

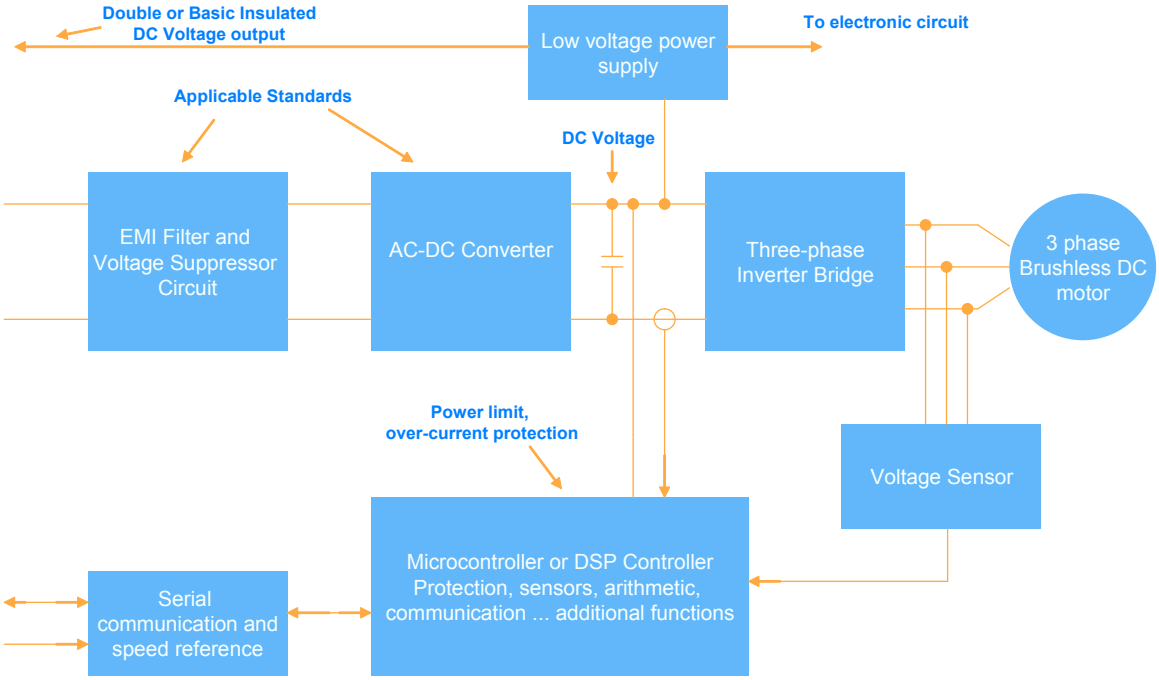

3. If the voltage checks good remove the inverter from the compressor by removing one screw at the bottom of the inverter that goes through the bracket welded to the compressor. Pull the inverter away from compressor. Use a small flat-bladed screwdriver to remove the plug from the compressor terminals. Using an ohmmeter, check the resistance between the compressor terminals (See testing compressor). If the compressor checks good replace the Inverter.

Remove screw

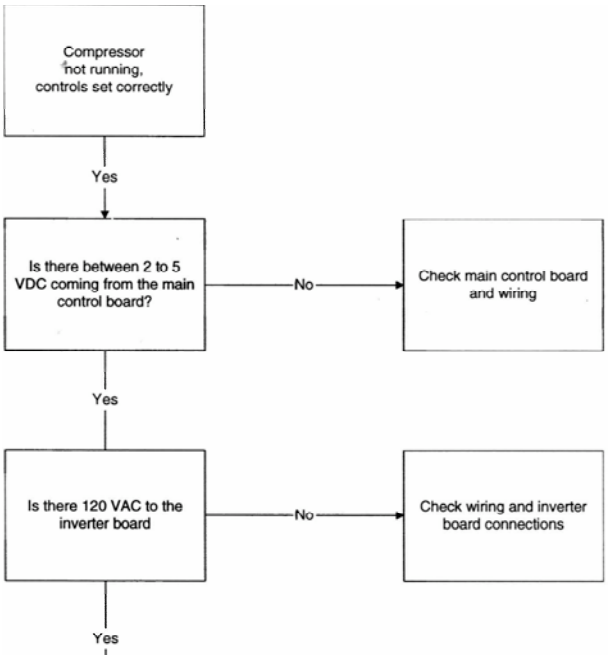

COMPRESSOR

The compressor has a 3 phase, 4 pole Brushless DC motor.

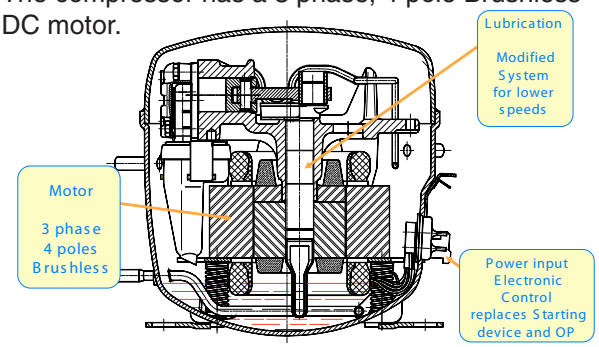

To test the compressor using your Ohmmeter, check the resistance between the terminals. Check should read 10 ohm + or - 10 % useing drawing to test.

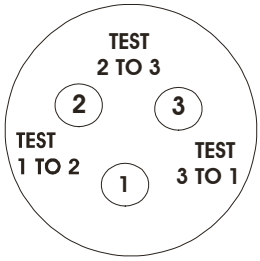

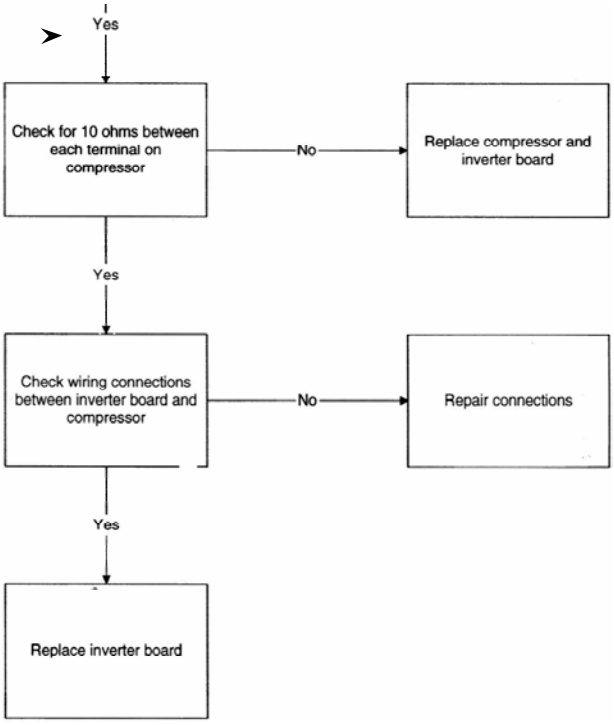

Perimeter and Mullion Hot Tube

To reduce the possibility of condensation forming on the exterior of the cabinet in high humidity areas, units are equipped with a one piece perimeter and mullion hot tube which is part of the refrigeration system. No electric heaters are used.

Evaporator Fan & Motor Assembly

The fan and motor assembly is located behind the freezer compartment air duct directly above the evaporator in the freezer compartment.

The fan is a 12 V DC suction type, pulling air up through the evaporator and blowing it through the refrigerator compartment fan grille. The fan will change from high to low speed when the freezer door is opened.

On current production models, the fan blade is not adjustable and is designed to be pressed onto the motor shaft until it bottoms out against the stop at the front of the fan blade.

To Remove Evaporator Fan Motor

1. Disconnect refrigerator from electrical supply.
2. Remove freezer section bottom shelves and baskets.
3. Remove four screws from evaporator cover and remove cover.
4. Remove 2 bottom screws on evaporator air duct cover. This will allow you to pick cover up to gain access to fan assembly.
5. Disconnect connector . Evaporator fan motor assembly can now be pulled free.
6. Remove back bracket holding fan motor by pushing in and releasing tabs.
7. Remove fan blade and slinger washer.
8. Pull evaporator fan motor free.
9. Remove rubber bushings from each end of motor and transfer to the new motor.
10. Reverse procedure to complete repairs.

NOTE

The Slinger washer on the fan motor shaft must be adjusted to within 1/16" to 1/8" from motor to prevent water from entering motor bearing.

NOTE

When replacing the fan blade, press the blade onto the motor shaft until the blade bottoms out on the shaft.

Evaporator Fan Motor Assembly

Figure C5

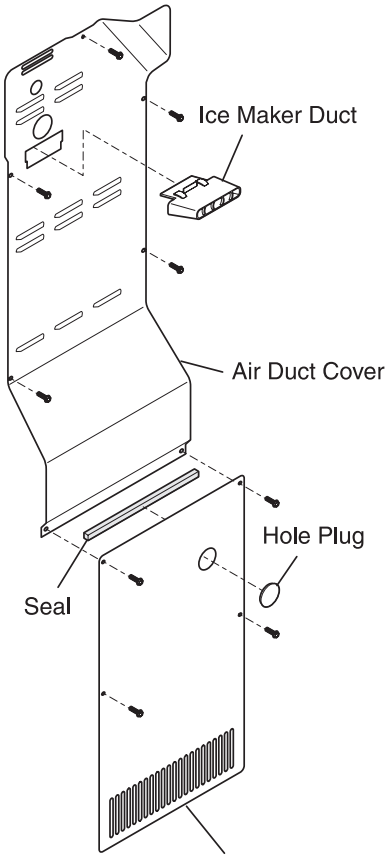

Figure C6

Defrost Thermostat

The defrost thermostat is a temperature sensing device. Wired in series with the defrost timer and the evaporator defrost heater, it senses the rise in evaporator temperature during a defrost cycle and cycles the defrost heater off after all frost is melted. It is calibrated to permit a defrost cycle only when the temperature is below a preset temperature. The contacts in the defrost thermostat are set to open at 47°F and close at 25°F.

To Test The Defrost Thermostat

1. Measure resistance across two thermostat leads at connector plug. At room temperature, resistance should be infinity. Contacts are open.
2. Place a couple ice cubes on sides of thermostat. After a few seconds, thermostat should reset.
3. Measure resistance again. This time, reading should be 0. Contacts have closed.
4. If resistence readings is not “0”, replace defrost thermostat. Contacts are probably burnt.

To Remove The Defrost Thermostat

1. Disconnect refrigerator from electrical supply.
2. Remove freezer section bottom shelves and baskets.
3. Remove ice container and rail assembly. The multiconnector at back of rail assembly must be disconnected before rail assembly will come free.
4. Loosen 2 screws holding ice maker to right side of compartment, just enough to lift ice maker free. The multiconnector must be disconnected before ice maker will come free from compartment.
5. Remove two rail assembly supports. (two screws on each one).
6. Remove four screws from evaporator cover.
7. Remove five screws on evaporator air duct cover.
8. Cut the two leads coming from thermost close to the base. You must leave enough wire coming from connector to allow for splicing tin new thermostat.
9. Remove faulty thermostat.

NOTE

The Defrost Thermostat Replacement Kit comes with a new thermostat, 2 solderless connectors and two pieces of heat shrink to allow for splicing the new thermostat to the connector plug.

10. Crimp two solderless connectors to the two leads on the new thermostat.
11. Slip two pieces of heat shrink onto the two leads coming from the connector plug.
12. Crimp two solderless connectors to the two leads coming from the connector plug.
13. Slip heat shrink over the solderless connectors and heat that area with a heat gun until the heat shrink is tight around the solderless connectors.
14. Hook thermostat back on the evaporator near or at the same place it was before.
15. Reverse Steps 1 - 7 to complete repairs.

Figure C7

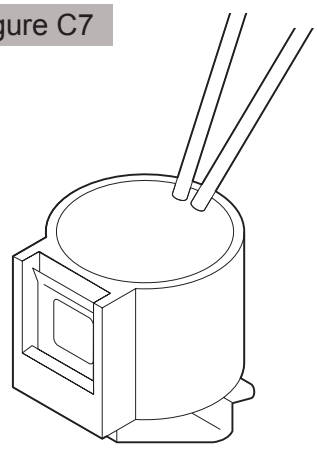

Defrost Heater

The defrost heater is a radiant “U” shaped resistance heater, rated at 450 watts. The defrost heater is energized during that period of the cycle when the defrost thermostat contacts are closed.

The length of time the heater is energized depends on the amount of frost accumulation on the evaporator.

How To Remove The Defrost Heater

1. Disconnect refrigerator from electrical supply.
2. Remove freezer section bottom shelves and baskets.

3. Remove ice container and rail assembly. The multiconnector at back of rail assembly must be disconnected before rail assembly will come free.
4. Loosen the 2 screws holding ice maker to right side of compartment just enough to lift ice maker free. The multiconnector must be disconnected before ice maker will come free from compartment.
5. Remove two rail assembly supports. (two screws on each one).
6. Remove four screws from evaporator cover.
7. Remove five screws on evaporator air duct cover.
8. Disconnect two leads to defrost heater.

⚠ CAUTION

This is a good time to test the heater. Check resistance of defrost heater using a multimeter. Resistance should be very close to 30 ohms. Replace defrost heater if resistance readings are out of range.

9. Unclip ground wire hooked to drain trough.
10. Remove screw holding evaporator bracket through drain trough to cabinet.
11. Remove rivet holding bracket to trough and set bracket aside for reuse.
12. Remove screw holding drain trough to cabinet .
13. Lift up and pull evaporator and drain trough out at bottom.

⚠ CAUTION

Use caution not to damage suction line or cap tube.

14. Slide drain trough off evaporator.
15. Remove retainer clamp from bottom of evaporator that holds heater in place.
16. Grab heater from bottom and pull free of evaporator. It's very snug so you'll need to use a little force.
17. Replace with new defrost heater.
18. Re-assemble in reverse order.

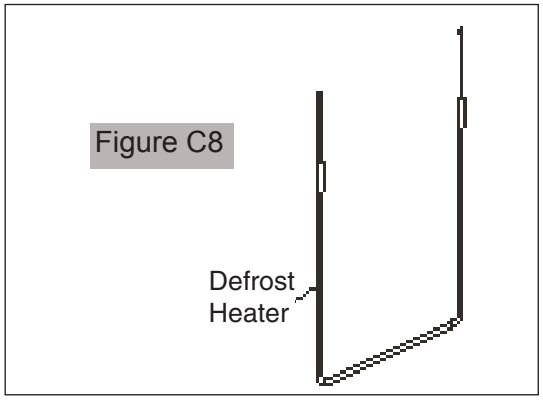

Figure C8

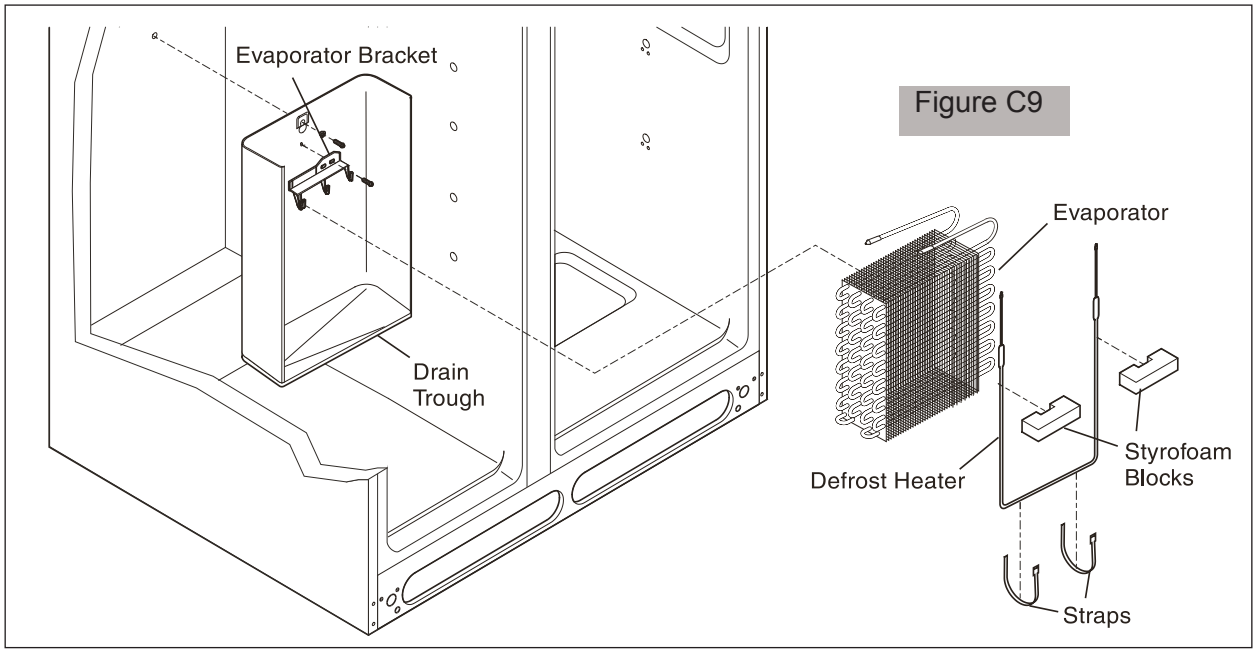

Figure C9

Example 1 IQ-TOUCH (VERSION B)

Example 2 Wave-Touch (VERSION A)

Description

Damper Assembly

Motorized door (+12VDC) located between the freezer section and the fresh food section of the refrigerator. Door opens to a certain position when there are refrigeration requirements in the fresh food section. The damper motor, which positions the door, is a 12 VDC, 2- phase, bipolar stepper motor.

Freezer Temperature Control

Electronic thermostat regulating the temperature of the frozen food section. A Negative Temperature Coefficient Thermistor monitors freezer compartment temperature. Loads controlled are the compressor, condenser fan and evaporator fan motor enabling and speed.

Fresh Food Temperature Control

Electronic thermostat regulating the temperature of the fresh food section. A Negative Temperature Coefficient Thermistor monitors fresh food compartment temperature. Loads controlled are the damper motor (position) and evaporator fan motor enabling and speed.

Defrost Heater

450 watt heating element (115VAC) locate in the evaporator assembly to melt frost during the defrost cycle. The defrost heater is connected to the NO contact of a relay. Defrost heater operation is detected and internally monitored by the microprocessor.

Defrost Termination Thermostat (DTT)

Bi-metal disc thermostat attached via a clamp to the evaporator tubing. During the defrost cycle, the device is a closed circuit between the defrost heater and Neutral. The DTT is designed to open at a predeter mined temperature ending the defrost cycle.

Standard Compressor

Motorized pump (115VAC) that creates the high and low pressures required for heat exchange. The Standard Compressor is controlled by a relay.

Evaporator Fan

Motorized fan (12 VDC) that circulates freezer and fresh food section air. The evap fan speed (2000 to 2700RPM) is controlled via a +12VDC circuit. The evap fan provides a feedback signal for the microprocessor to verify rotation and speed (4 pules per revolution). If it does not sense the pulses, it will disable power to the fan motor and compressor. It will try to restart the fan motor 6 times. If it does not start after the 6th try, it will enable a defrost cycle. If the fan will not start after the defrost cycle, an E & F will be displayed. When the freezer door is open the fan motor will run at a slower speed of 2000RPM.

Condenser Fan

Motorized Fan (115VAC) that circulates air through the condenser coils. Either a Relay or Triac depending on compressor used controls condenser Fan Motor.

Air Filter

The air filter is located in the top right side of the food compartment. Air is circulated through the filter by the evaporator fan motor.

Sensors

Negative Temperature Coefficient Thermistor.

Fresh Food Lights

Fresh food lights are enabled and disabled depending on the fresh food door light switch state. Light stays on maximum of 15 minutes.

NOTE

Interior lights will shut off if food door is left open for over 15 Minutes. Close and re-open door to reset.

Alarm

Audible Transducer (Piezo)

Control, Main Board

Power Supply

AC Input Voltage – 115 V AC @ 60 Hz.

Control, User Interface

Power Supply - Input - 5VDC (from Main Board)

Numeric Display

Version A (Example 1)

The alarm settings are between the temperature display's and the wording will light up. The function display's are across the top, the dispenser display's are across the bottom. The Display will light up when activated.

Version B (Example 2)

The alarm settings are in the top right corner. A LED will light up in front of the alarm that is sounding. The displays across the top and bottom have a LED above the display that lights when activated.

Show Room Setting

Active Function

Displays

Freezer/Fresh Food Temperature Keys

Fresh Food Lights

Alarm Key - Key Tone ONLY

Air Filter Key Key Tone and green LED toggles on and off.

All other functions are disabled including alarm(s) enabling.

NOTE

Interior lights will shut off if food door is left open for over 10 Minutes. To reset control, close door and then open door.

Temp Mode/Temp Display

Allows customer to change temperature readings from Fahrenheit to Centigrade and back.

NOTE

The term "Power On Reset" (POR) will appear many times in the alarm and service test sections. Power On Reset simply means you unplug the product at the household electrical outlet, wait 2 minutes and plug the product back into the outlet.

Alarms and Signals

Temperature Alarm

Enabling is automatic and started at the time the product is plugged in (POR) but is delayed until actual Freezer temperature = Freezer temperature set point and actual Fresh Food temperature = Fresh Food temperature set point. Once set points are reached, alarm LED (Green) will come ON, steady state, indicating alarm is active.

Alarm Condition

Alarm is enabled and active. Temperature parameters are within tolerances. Alarm LED (Green) is ON and steady state.

Reset Button

Press once to reset any Alarm condition. Alarm LED (steady green) Press and hold reset 3 seconds. You will hear one beep. This will turn OFF all alarm functions.

Press and hold reset 3 seconds. You will hear one beep. This will turn ON all alarm functions.

Default at POR is On.

NOTE

At POR the alarms are delayed (180 minutes max.) until set points temperatures are reached.

Door Ajar LED (Flashing Green)

Either door is open for five minutes. LED blinks and the control beeps. Condition is reset if the door is closed or the Reset button is pressed.

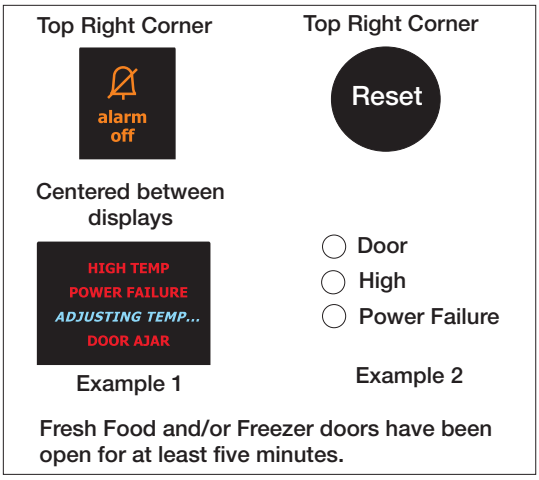

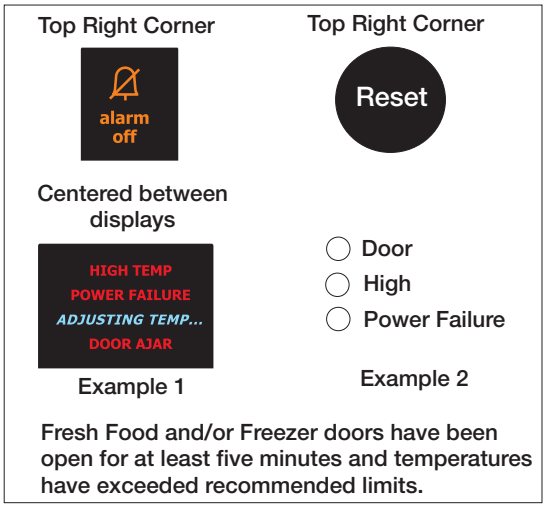

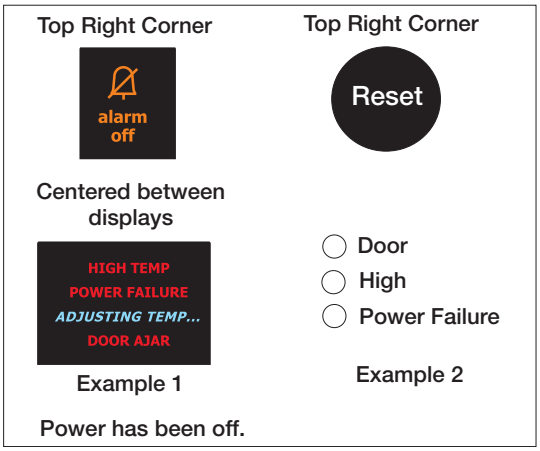

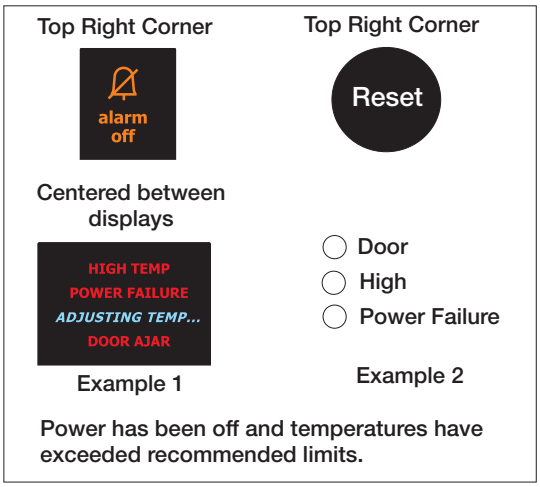

NOTE

If the user unplugs the unit and the setpoints have been reached, the “Power Off” indicator will be ON when the unit is plugged back in (POR). If the user has the unit unplugged long enough to cause an unsafe temperature condition, the High Temp” indicator will also be ON when the unit is plugged back in.

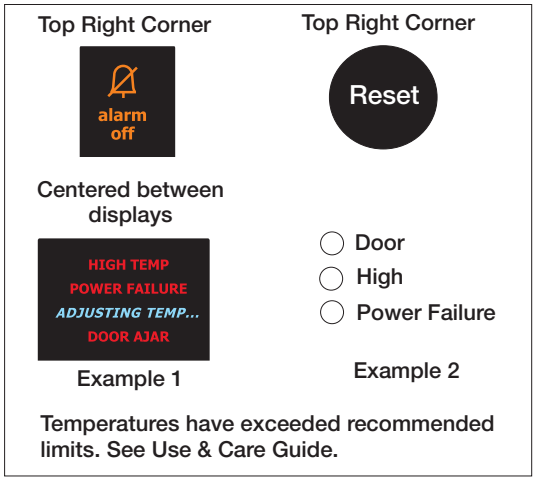

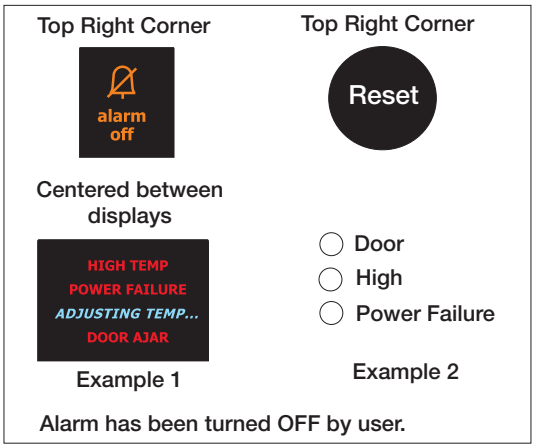

Show Room Setting

Activation

Press and hold Freezer Temperature UP (WARMER) Key while pressing the Fresh Food Temperature DOWN (COLDER) hold for 5 seconds. Both displays will flash "0" for 10 seconds. While the displays are flashing, press the Freezer Temperature UP key to confirm activation.

Deactivation

Mode automatically deactivates at a POR.

Active Function

Displays

Freezer/Fresh Food Temperature Keys

Fresh Food Lights

Alarm Key - Key Tone ONLY

Air Filter Key - Key Tone and green LED toggleson & off. All other functions are disabled including alarm(s) enabling.

NOTE

The "Show Room" mode, which during activation doesn't recognize Alarm/Power Off conditions.

Change Between Fahrenheit and Centigrade

To change form Fahrenheit to Centigrade on example 1 Press the temp mode key. On example 2 press and hold the temp display key.

Example 1

Example 2

Advance Into Defrost Cycle Manually.

Activation

Press and hold Fresh Food Temperature UP (WARMER) Key while pressing the Freezer Temperature DOWN (COLDER) hold for 5 seconds. This will advance the processor into the defrost cycle.

Deactivation

Press and hold Fresh Food Temperature UP (WARMER) Key while pressing the Freezer Temperature DOWN (COLDER) hold for 5 seconds. This will advance the processor out of the defrost cycle. Or just leave the refrigerator alone and it will go through a normal defrost cycle and start running after the defrost limit switch has turned off the heater and the controller has allowed for a normal drip time.

Defrost Characteristics

The main PCB determines the time intervals of the defrost heater. The Defrost time is based on a run time, door openings and monitors the time it takes to open the defrost bimetal during the defrost cycle.

Defrost times: 6, 8, 10, or 12 hours. Vacation mode 96 hours.

Based on the opening of the defrost limiter during defrost:

10 min. or less,	+ 2 hrs
11-13 min.	No Change
14-22 min.	- 2 hrs
23 min. or greater	Every 6 hrs

Vacation mode is based on no door openings for 24 hours and a defrost limiter open time of less than 13 min.

Wave-Touch™ (some models)

Your refrigerator is equipped with a **Wave-Touch™ Panel** user interface display. It is only necessary to touch the glass. There is no need to press with force. There are three levels of display.

1st Level: Sleep Mode

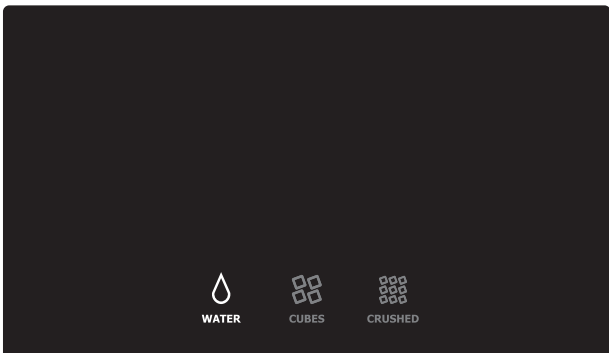

Sleep mode displays only the WATER, CUBES and CRUSHED options. Touch an icon to activate the desired dispenser mode. The active dispenser mode is more brightly illuminated.

2nd Level: Awakened Display Mode

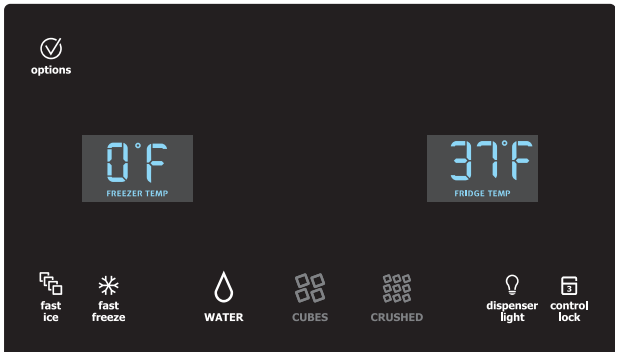

The display is awakened by touching anywhere on the glass where there is an indicator. Black space will not awaken the display. After 10 seconds of inactivity, the display will return to the Sleep mode.

The following dispenser options are illuminated:

fast ice	Increases the production of ice
fast freeze	Activates a faster rate for freezing food
dispenser light	On / Off
control lock	Press and hold for three seconds to activate and deactivate. This restricts undesired changes to the refrigerators settings and prevents use of the ice and water dispenser.

3rd Level: User Variable Options

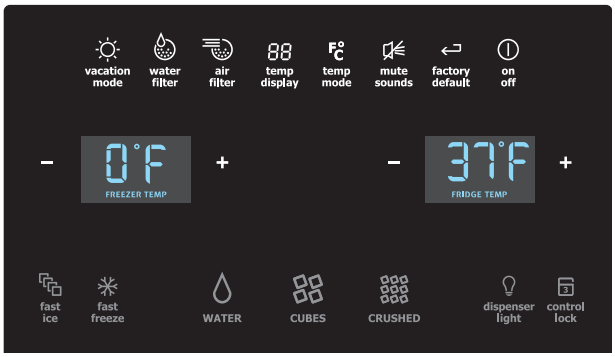

Touching the options icon displays the following options:

vacation mode	Conserves energy by increasing the time between automatic defrost. It is automatically deactivated by opening the refrigerator door after 24 hours. This feature is automatically activated during long periods between door openings. Vacation mode is manually activated when the red indicator is lit.
water filter	Touch to display filter condition status. Press and hold for three seconds to reset.
air filter	Touch to display filter status. Press and hold for three seconds to reset.
temp display	When active, it allows the display of the freezer and fridge temps during "Sleep Mode". The temperature is displayed when the red indicator is lit.
temp mode	Touch to toggle display from Fahrenheit to Celsius.
mute sounds	Tones emitted by each keypress can be turned off based on user preference. The sounds are muted when the red indicator is lit. Warning signals will stay active.
factory default	Resets all refrigerator settings such as temp, temp display, and alarm tones to their factory default settings.
on off	Press and hold for three seconds to turn off the cooling system to clean the refrigerator. It also turns off all dispenser functions. The temperature display will read OFF.

IMPORTANT

Pressing the **system off** icon does not turn off power to your refrigerator. You must unplug the power cord from the wall outlet.

Setting cooling temperatures

1 Touch the glass panel to illuminate the 2nd level of display.

2 Select the options icon. Plus (+) and minus

(-) indicators will appear on either side of the displayed temperatures.

3 Press the + or – indicator to adjust the temperature to the desired setting.

The temperature display will begin to blink with the first touch. After five seconds of inactivity, the display will beep to accept the new temperature. After 10 seconds, the display times out and returns to the basic display.

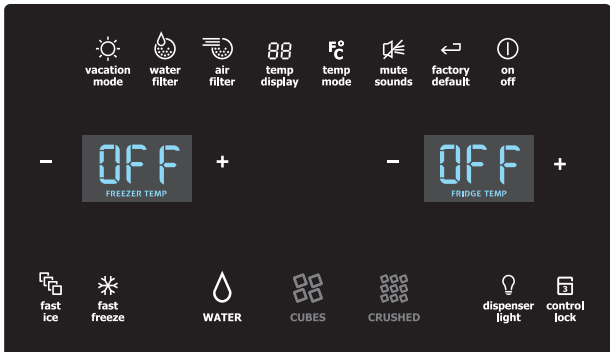

Alarms

Door Ajar If the door has been left open for an extended period of time, an alarm will sound and the door ajar indicator will display in the middle of the display. The alarm is turned off by closing the door. The mute sounds key will illuminate to prompt the reset of any pending alarms. Press this key to reset any system Alarms.

High Temperature In the event of a high temperature condition, the temperature display will display "HI,". After 20 minutes and the **high temp** alert will be displayed and the **alarm off** icon will illuminate until pressed, acknowledging the alarm, at which time the highest temperature reached will be displayed and the refrigerator will resume normal operation. All other modes are turned off until the alarm is acknowledged.

Power Failure Alert In the event of a power failure, the **power fail** alert will be displayed and the temperature display will illuminate until the **alarm off** icon is pressed, acknowledging the alarm. Other modes may be turned off until the alarm is acknowledged. The **power fail** alert is turned off and the refrigerator will resume normal operation. **The high temp alarm may also be illuminated until a safe operating range temperature has been reached**.

Wave-Touch™/IQ-Touch™ "Sabbath Mode" (some models)

The Sabbath Mode is a feature that disables portions of the refrigerator and its controls for both Wave-Touch™ and IQ-Touch™, in accordance with observance of the weekly Sabbath and religious holidays within the Orthodox Jewish community.

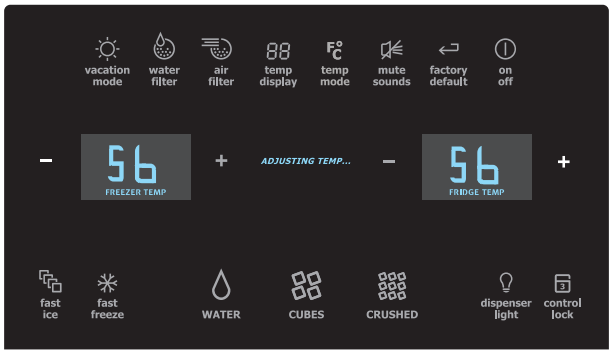

Sabbath Mode is turned ON and OFF by pressing and holding both the outermost **"-" and "+"** indicators for five seconds for both the Wave-Touch™ and IQ-Touch™ modes. The display shows "Sb" while in Sabbath mode.

In the Sabbath Mode, the High Temp alarm is active for health reasons. If a high temperature alarm is activated during this time, for example due to a door left ajar, the alarm will sound intermittently for about 10 minutes. The alarm will then silence on its own and a red high temperature icon will display. The high temp icon will continue to display, even if the door is closed, until the Sabbath mode is exited and the icon reset. The refrigerator will function normally once the door is closed, without any violation of the Sabbath/Holidays.

For further assistance, guidelines for proper usage and a complete list of models with the Sabbath feature, please visit the web at **http:\\www.star-k.org**.

IQ-Touch™ (some models)

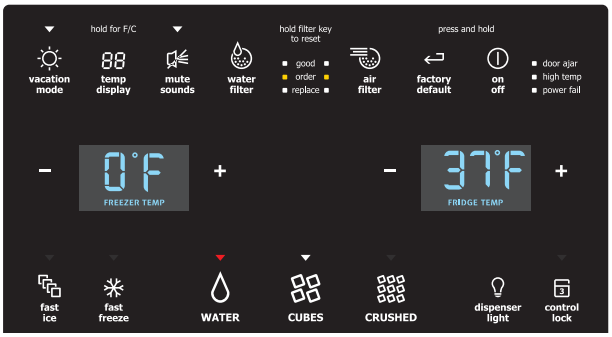

Your refrigerator is equipped with a **Glass Touch Panel** user interface display. It is only necessary to touch the glass. There is no need to press with force. There are three dispenser modes:

1. Water
2. Ice Cubes
3. Crushed Ice

A red indicator light will be illuminated above the active mode.

Touch the icon to activate the options below.

Any of the following options that are activated have a red indicator light above the icon.

fast ice	Increases the production of ice
fast freeze	Activates a faster rate for freezing food
dispenser light	On / Off
control lock	Press and hold for three seconds to activate and deactivate. This restricts undesired changes to the refrigerators settings and prevents use of the ice and water dispenser.
vacation mode	Conserves energy by increasing the time between automatic defrost. It is automatically deactivated by opening the refrigerator door after 24 hours. This feature is automatically activated during long periods between door openings. Vacation mode is manually activated when the red indicator is lit.
water filter	Touch to display filter condition status. Press and hold for three seconds to reset.
air filter	Touch to display filter status. Press and hold for three seconds to reset.
temp display	Touch to toggle the freezer and fridge temps display on and off. Touch and hold **temp display** to toggle display from Fahrenheit to Celsius.
mute sounds	Tones emitted by each keypress can be turned off based on user preference. The sounds are muted when the red indicator is lit. Warning signals will stay active.
factory default	Resets all refrigerator settings such as temp, temp display and ring tones to their factory default settings.
on off	Press and hold for three seconds to turn off the cooling system to clean the refrigerator. It also turns off all dispenser functions. The temperature display will read OFF.

IMPORTANT

Pressing the **system off** icon does not turn off power to your refrigerator. You must unplug the power cord from the wall outlet.

Setting cooling temperatures

1. Touch the glass panel to illuminate the display to the Plus (+) and minus (-) indicators which appear on either side of the displayed temperatures.
2. Press the + or – indicator to adjust the temperature to the desired setting.

   The temperature display will begin to blink with the first touch. The display times out after 5 seconds and returns to the basic display.

Alarms

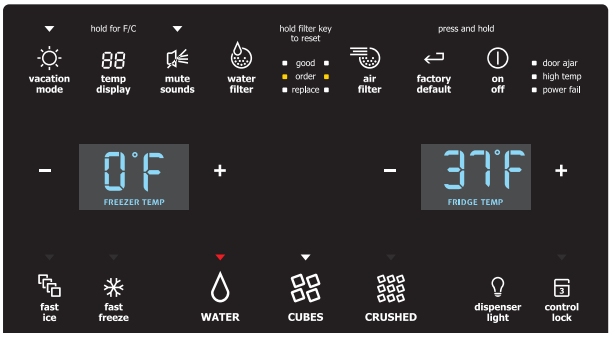

Door Ajar	If the door has been left open for an extended period of time, an alarm will sound and the door ajar indicator will display in the middle of the display. The alarm is turned off by closing the door. The mute sounds key will illuminate to prompt the reset of any pending alarms. Press this key to reset any system alarms.
High Temp	In the event of a high temperature condition, the temperature display will display "HI,". After 20 minutes and the **high temp** alert will be displayed and the **alarm off** icon will illuminate until pressed, acknowledging the alarm, at which time the highest temperature reached will be displayed and the refrigerator will resume normal operation. All other modes are turned off until the alarm is acknowledged.
Power Fail	In the event of a power failure, the **power fail** alert will be displayed and the **mute sounds** icon will illuminate until the **mute sounds** icon is pressed, acknowledging the alarm. Other modes may be turned off until the alarm is acknowledged. The **power fail** alert is turned off and the refrigerator will resume normal operation. **The high temp alarm may also be illuminated until a safe operating range temperature has been reached**.

Wave-Touch™

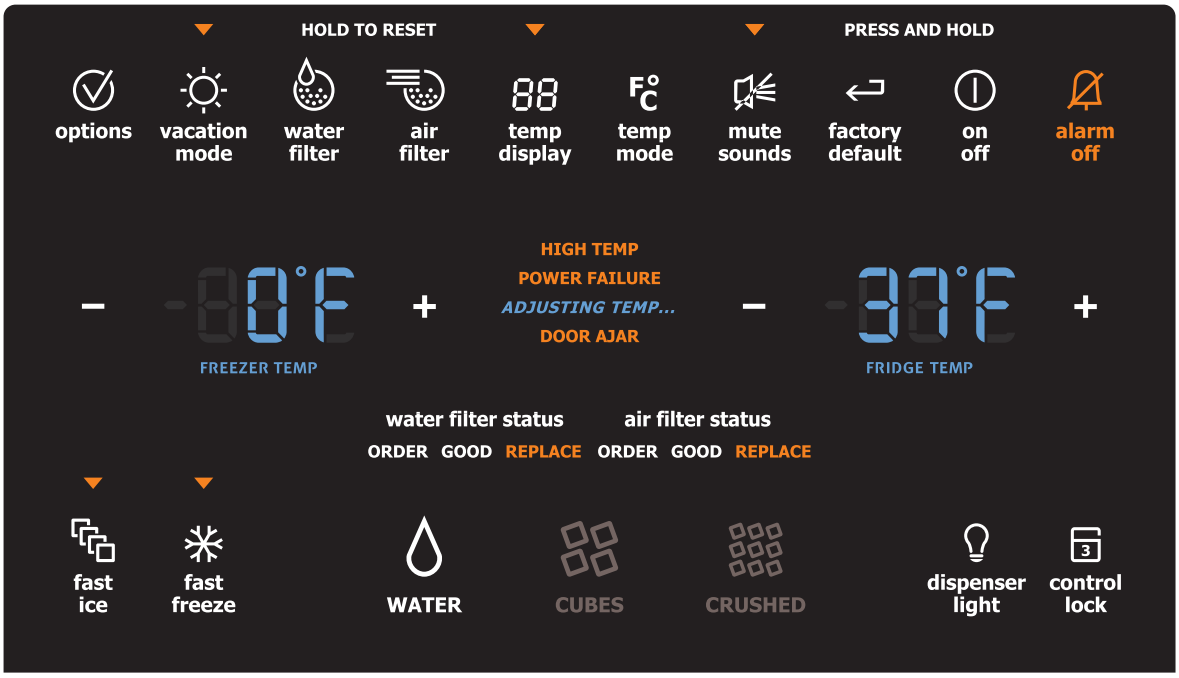

IQ-Touch™

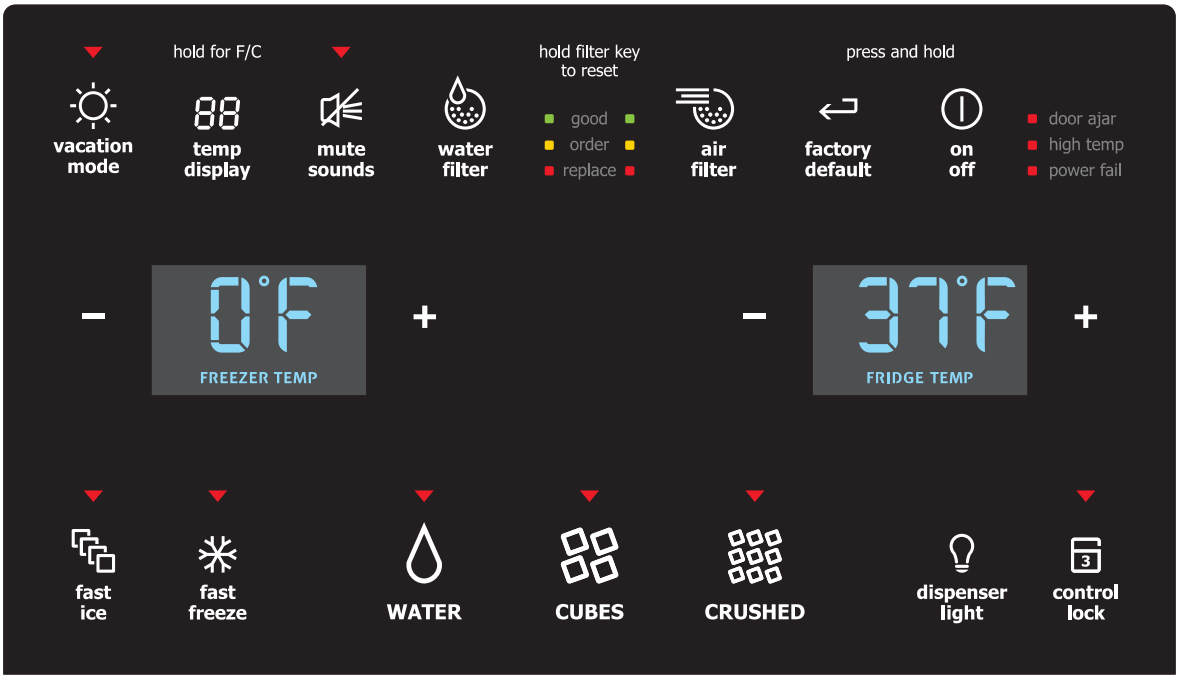

PERFORMANCE DATA NO LOAD & NO DOOR OPENINGS AT MID-POINT CONTROL SETTING				
Type A with Run/Start Capacitor	65°F (18°C) Ambient		90°F (32°C) Ambient	
	Variable Speed	Standard	Variable Speed	Standard
Operating Time	74 to 84%	32 to 40%	100%	55 to 65%
Freezer Temperature	-2° to 2° F -19° to -17° C	0° to 4° F -18° to -16° C	-1° to 3° F -18° to -16° C	-1° to 3° F -18° to -16° C
Refrigerator Temperature	34° to 39° F 1° to 4° C	34° to 39° F 1° to 4° C	34° to 39° F 1° to 4° C	34° to 39° F 1° to 4° C
Low Side Pressure (cut-in)	5 to 12 psig 43 to 83 kPa	5 to 12 psig 43 to 83 kPa	N/A	5 to 12 psig 43 to 83 kPa
Low Side Pressure (cut-out)	-2 to 2 psig -14 to 14 kPa	-2 to 2 psig -14 to 14 kPa	-2 to 2 psig -14 to 14 kPa	-2 to 2 psig -14 to 14 kPa
High Side Pressure (last 1/3 cycle)	90 to 105 psig 621 to 724 kPa	90 to 115 psig 621 to 793 kPa	120 to 135 psig 827 to 931 kPa	130 to 155 psig 896 to 1069 kPa
Wattage (last 1/3 cycle)	60 to 65	120 to 150	65 to 80	130 to 160
Amps (running)	.7 to 1.1	1.0 to 1.4	.9 to 1.3	1.1 to 1.5
Base Voltage	115 vac (127 vac max)			
DEFROST SPECIFICATIONS				
Cabinet Size	**Thermostat**		**Heater**	
	Cut-in	Cut-out	Watts	Ohms
23', 23' CD, 26'	25° F (-4° C)	47° F (8° C)	450	30
Elecrttonic Timer - (ADC) Defrost 24 minutes every 6-96 hours of compressor run time.				
CONDENSER FAN MOTOR				
Watts	**RPM**		**Amps**	
3.1	1100 CW Opposite Shaft		0.03 Running	
ICE MAKER SPECIFICATIONS				
Electrical	115 vac (127 vac max)			
Thermostat	Opens at 48° F (9° C), Closes at 15° F (-9° C)			
Heater Voltage	85 vac			
ICE MAKER CONNECTOR PLUG CONNECTIONS				
Wire Number	**Wire Color**		**Connects to:**	
1	Green/Yellow		Ground	
2	Yellow		Water Valve	
3	Black		Line	
4	Light Blue		Neutral	

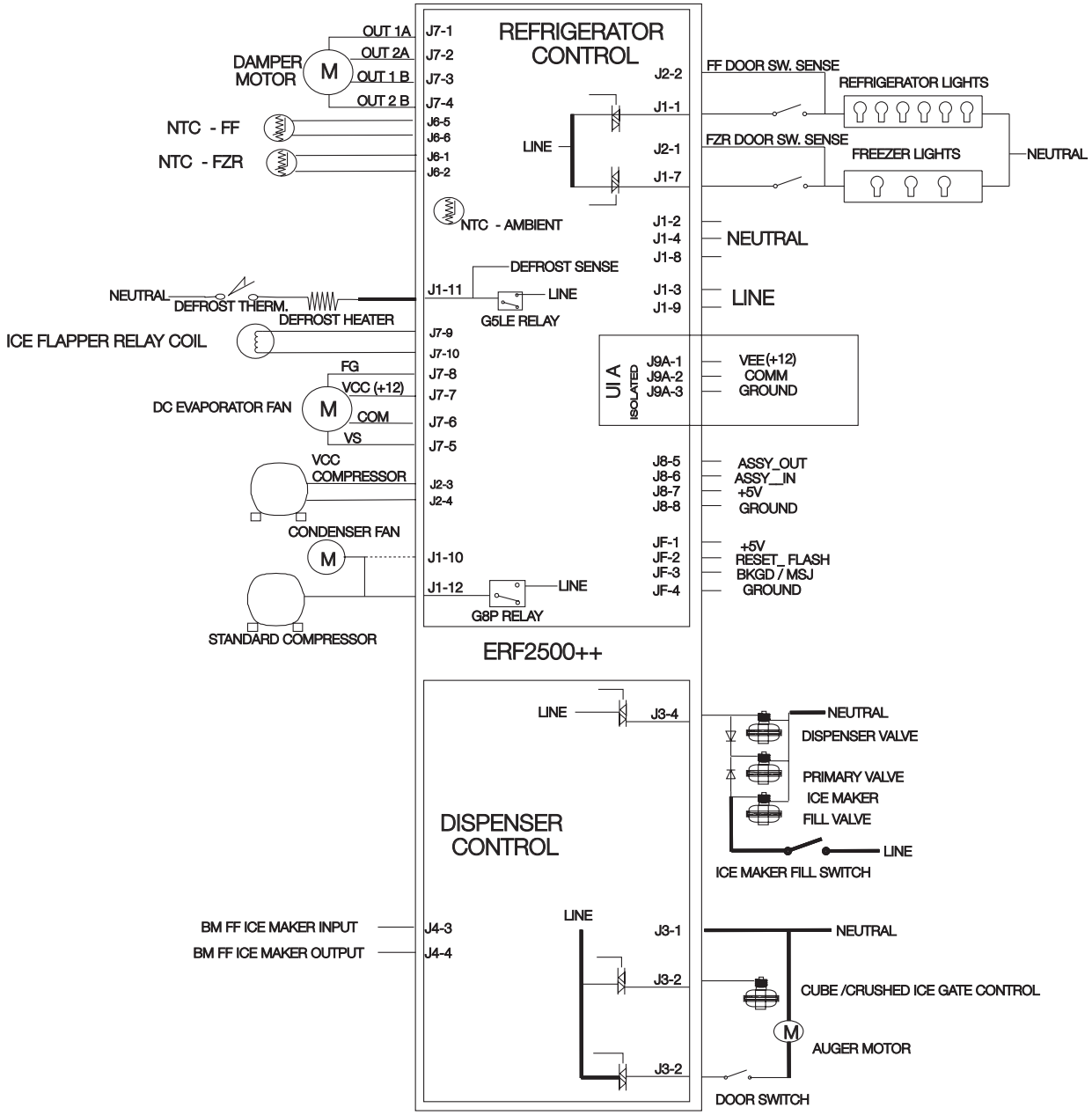
REFRIGERATOR CONTROL
DAMPER MOTOR
M
OUT 1A
OUT 2A
OUT 1 B
OUT 2 B
J7-1
J7-2
J7-3
J7-4
NTC - FF
NTC - FZR
J6-5
J6-6
J6-1
J6-2
NTC - AMBIENT
LINE
J2-2
J1-1
J2-1
J1-7
FF DOOR SW. SENSE
REFRIGERATOR LIGHTS
FZR DOOR SW. SENSE
FREEZER LIGHTS
NEUTRAL
J1-2
J1-4
J1-8
NEUTRAL
DEFROST SENSE
NEUTRAL
DEFROST THERM.
DEFROST HEATER
J1-11
LINE
G5LE RELAY
J1-3
J1-9
LINE
ICE FLAPPER RELAY COIL
J7-9
J7-10
FG
VCC (+12)
J7-8
J7-7
DC EVAPORATOR FAN
M
COM
J7-6
VS
J7-5
UI A
ISOLATED
J9A-1
J9A-2
J9A-3
VEE (+12)
COMM
GROUND
VCC COMPRESSOR
J2-3
J2-4
J8-5
J8-6
J8-7
J8-8
ASSY_OUT
ASSY_IN
+5V
GROUND
CONDENSER FAN
M
J1-10
J1-12
LINE
G8P RELAY
JF-1
JF-2
JF-3
JF-4
+5V
RESET_ FLASH
BKGD / MSJ
GROUND
STANDARD COMPRESSOR
ERF2500++
LINE
J3-4
NEUTRAL
DISPENSER VALVE
PRIMARY VALVE
ICE MAKER
FILL VALVE
LINE
ICE MAKER FILL SWITCH
DISPENSER CONTROL
BM FF ICE MAKER INPUT
BM FF ICE MAKER OUTPUT
J4-3
J4-4
LINE
J3-1
NEUTRAL
J3-2
CUBE /CRUSHED ICE GATE CONTROL
M
AUGER MOTOR
J3-2
DOOR SWITCH

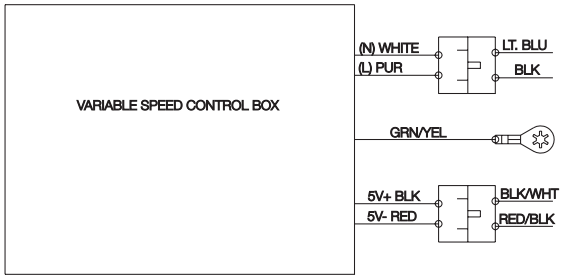

VARIABLE SPEED COMPRESSOR

P.T.C. STARTER WITH RUN CAPACITOR

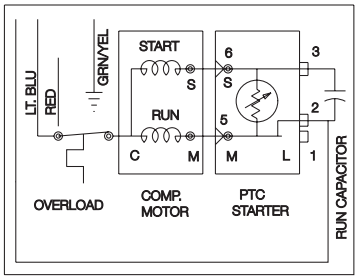

*CAPACITOR IS ONLY USED WITH SOME P.T.C. MODELS

STANDARD AC COMPRESSOR

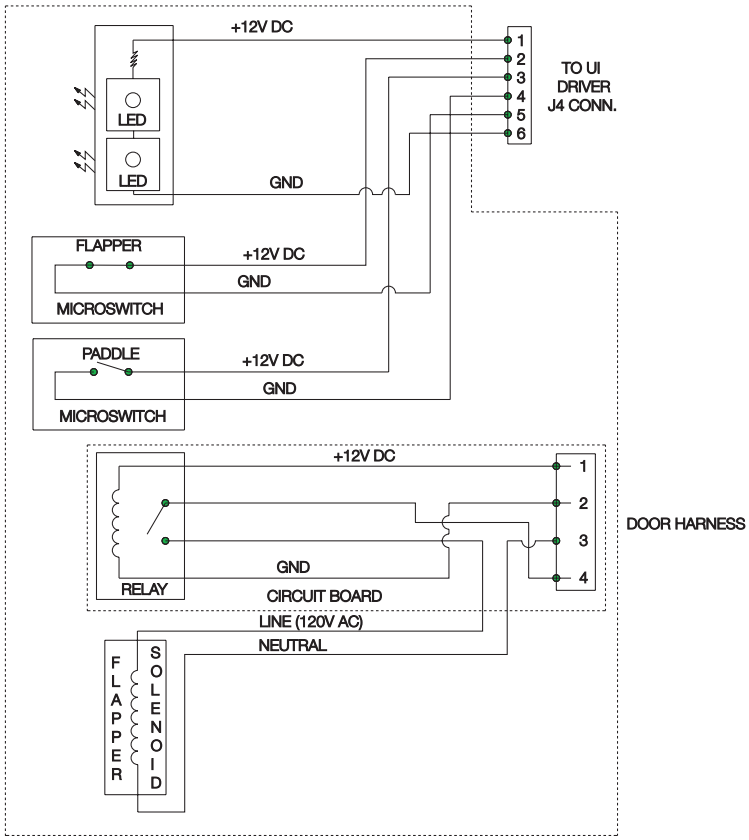

ICE & WATER DISPENSER MODULE

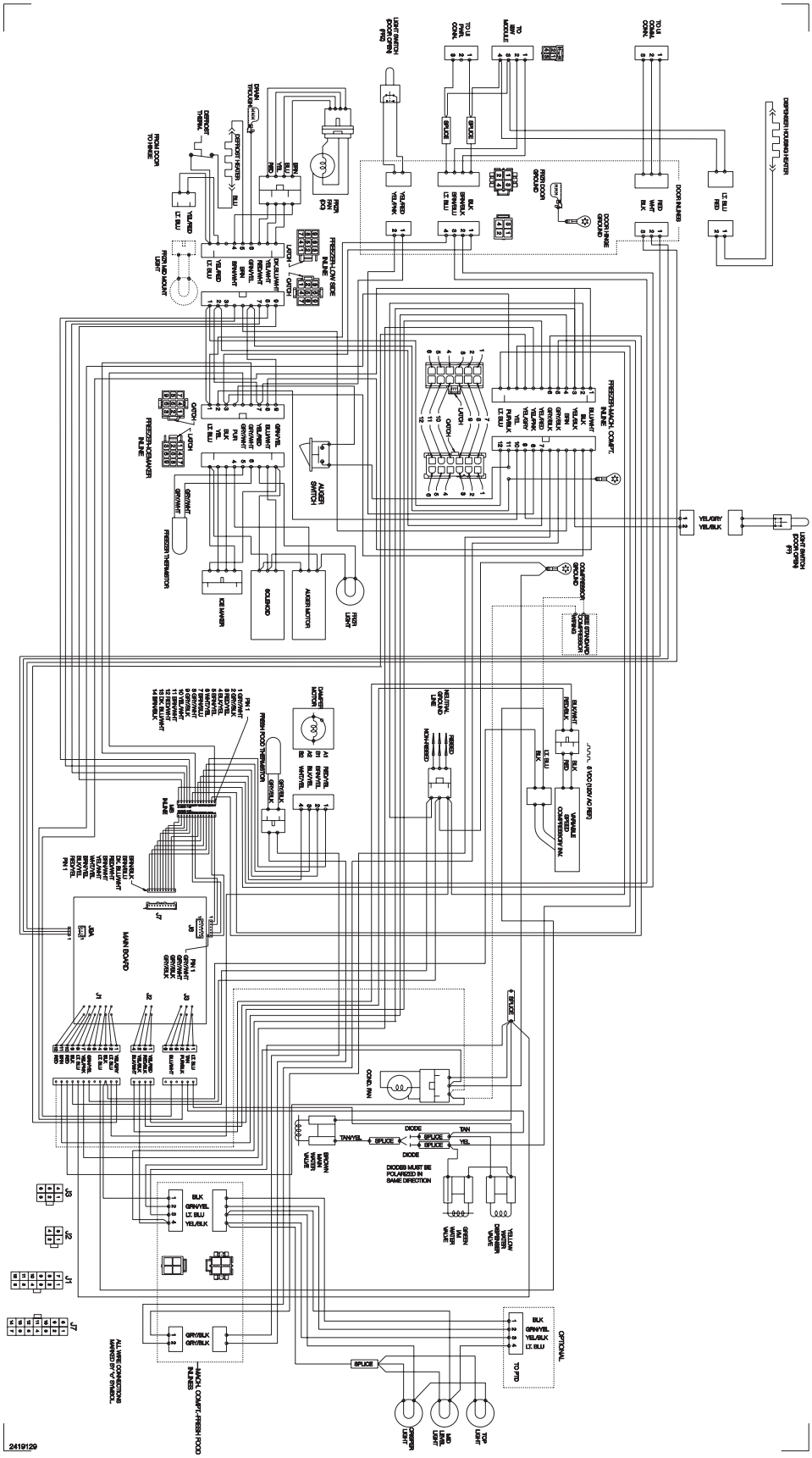
MAIN BOARD
FREEZER-LOW SIDE
FREEZER-HIGH SIDE
FREEZER-MACH. COMPT.
FRESH FOOD THERMISTOR
FREEZER THERMISTOR
ICE MAKER
SOLENOID
AUGER MOTOR
AUGER SWITCH
LIGHT
COMPRESSOR
COND. FAN
DIODE
DIODES MUST BE POLARIZED IN SAME DIRECTION
OPTIONAL
ALL WIRE CONNECTIONS MARKED BY 'V' SYMBOL
2419129

Service Diagnostics Mode

With a series of key presses, a service technician will be able to view data, via the display and exercise loads to help troubleshoot the product. Following is a list of capabilities.

View

Firmware Version (What version of software)

Check door sensors

Check Defrost Limit Switch

Check dispenser paddle

Operate the ice door

Test

Manually test the freezer, fresh food and ambient thermistors.

Run evaporator fan at high and low speeds.

Operate damper to full open, full close

Turn defrost heater on.

Turn compressor on.

Test Auger motor.

Test Cube/Crush Solenoid.

Test Freezer and food compartment lighting system.

Test the water valve in the water dispence mode.

Test ice door operation

Activation

To enter the test mode press and hold the Freezer up and down temperature pads at the same time for 5 seconds.

NOTE

On Version " A" (Wave-Touch) you must touch a pad across the top of the control to illuminate the display (Not the ON/OFF pad) before you can enter the test mode. The "B" Version display is always illuminated.

Deactivation

Press and hold the Fresh Food (FF) Temperature "UP" key for 5 seconds. The control will beep and service mode is deactivated.

NOTE

Mode automatically deactivates after 5 minutes of no key entry.

Operation

To actuate a load (turn on or off), use the ON/OFF key present on the User Interface Board.

To step to the next test,use the FF "UP" key.

Startup Procedure

On activation, all LEDs on the display will illuminate.

Pressing the FF UP key will clear the display.

Pressing the FF UP key again will begin the first test.

AC Load Testing

NOTE

The test number will appear in the FF display. When the ON/OFF pad is pressed the part being tested will appear in the FZ display.

Test 1 - Standard Compressor test.

Push the ON/OFF pad and the compressor will run. Push the ON/OFF pad again and it will stop running.

NOTE

Will not show when product has a VCC Compressor.

Test 2 - Defrost Heater Test.

Push the ON/OFF pad and the heater will come on. Push the ON/OFF pad again and the heater will go off .

Test 3 - Fresh Food Compartment lighting test.

Push the ON/OFF pad then open the food door and the food compartment lights will come on low and ramp up Push the ON/OFF pad again to cancel test.

Test 8 - Water Valve , Water Dispenser Only.

Push the ON/OFF pad to activate. Push the ON/OFF pad again to deactivate.

Test 9 - Freezer Compartment Lighting Test.

Push the ON/OFF pad then open the food door and the food compartment lights will come on low and ramp up. Push the ON/OFF pad again to cancel test.

Test 10 -Auger Motor

Push the ON/OFF pad to activate. Push the ON/OFF pad again to deactivate.

Test 11 - Cube/Crush Solenoid

Push the ON/OFF pad to activate. Push the ON/OFF pad again to deactivate.

Test 12 - VCC Condenser Fan

Push the ON/OFF pad and the fan motor will run at full speed. Push the ON/OFF pad again and it will stop running.

DC Load Testing

NOTE

Only used with VCC Compressor.

Test 38 - VCC Compressor

Push the ON/OFF pad and the Compressor will run at full speed. Push the ON/OFF pad again and it will stop running.

NOTE

Only used with VCC Compressor.

Test 15 - Evaporator Fan

Push theON/OFF pad and the fan will run at low speed. (LOW will show in freezer display) Push the ON/OFF pad and the fan will run at full speed. (HI will show in freezer display)Push the ON/OFF pad again and the fan will stop running. (Off will show in the display)

Test 22 - Damper Test

Push the ON/OFF pad and the damper will open. (OP will show in freezer display)Push the ON/OFF pad and the damper will close. (CL will show in freezer display)

Digital Input Test

Test 23 - Fresh Food Door

Freezer Display will show OP open when door is open and CL when door is closed.

Test 24 - Freezer Door

Freezer Display will show OP open when door is open and CL when door is closed.

Test 26 - DTT (Defrost Limit Switch)

Display will show OP open when switch is open and CL when switch is closed.

Test 28 - Dispenser paddle test.

Push the ON/OFF pad and press paddle with freezer door closed to test.

Test 36 - Ice door test

Push the ON/OFF switch and the solenoid should activate. The Freezer display should show the ice door is closed.

Test 29 - Fresh Food Thermistor

Push the ON/OFF pad and the display should show a “0” if the thermistor is good and a “ER” if the thermistor is open or shorted.

Test 30 - Freezer Thermistor

Push the ON/OFF pad and the display should show a “0” if the thermistor is good and a “ER” if the thermistor is open or shorted.

Test 33 - Ambient Thermistor

Push the ON/OFF pad and the display should show a “0” if the thermistor is good and a “ER” if the thermistor is open or shorted.

NOTE

The Ambient Thermistor is mounted on and part of the lower control board.

Firmware Versions

Test 34 - What software is on the control boards.

NOTE

34 is the last test. 34 will not show in the display.

1 - System Parameters

Example of what will show in display one letter at a time: JFE000112

2 - Cofirming the lower control board

Example of what will show in display one letter at a time: 00004049

3 - The software on the lower control board

Example of what will show in display one letter at a time: JFE401N (N looks like an H in the display)

4 - Confirming the upper control board (UI user inner face board)

Example of what will show in display one letter at a time: EFAC000N (N looks like an H in the display)

5 - The software on the UI board

Example of what will show in display one letter at a time: EF_C0009E

NOTE

It is normal for the control to count up in seconds after testing is completed until the test model is canceled.

Power Failure light will come on after testing is canceled, this is normal.

Manual Defrost

To enter the manual defrost mode press and hold the FF up and FF down at the same time for 6 seconds this will advance the control into a normal defrost cycle.

Show Room Mode

To enter the Show Room Mode press and hold the Fresh Food down and the Freezer up pad at the same time for 6 seconds. A power on reset (POR) will be necessary to exit the Show Room Mode.

NOTE

A POR means you unplug the product for two minutes and then plug it back in again.

If the service mode is activated while the product is in the show room mode this will cancel the Show Room Mode and the product will enter Service Mode. After exiting Service Mode, the product will go in to normal operation mode not back in to Show Room Mode.

If the Manual Defrost is activated while the product is in the show room mode the displays will work as normal but the heater will not turn on.

Diagram C

Service Mode Display Routine

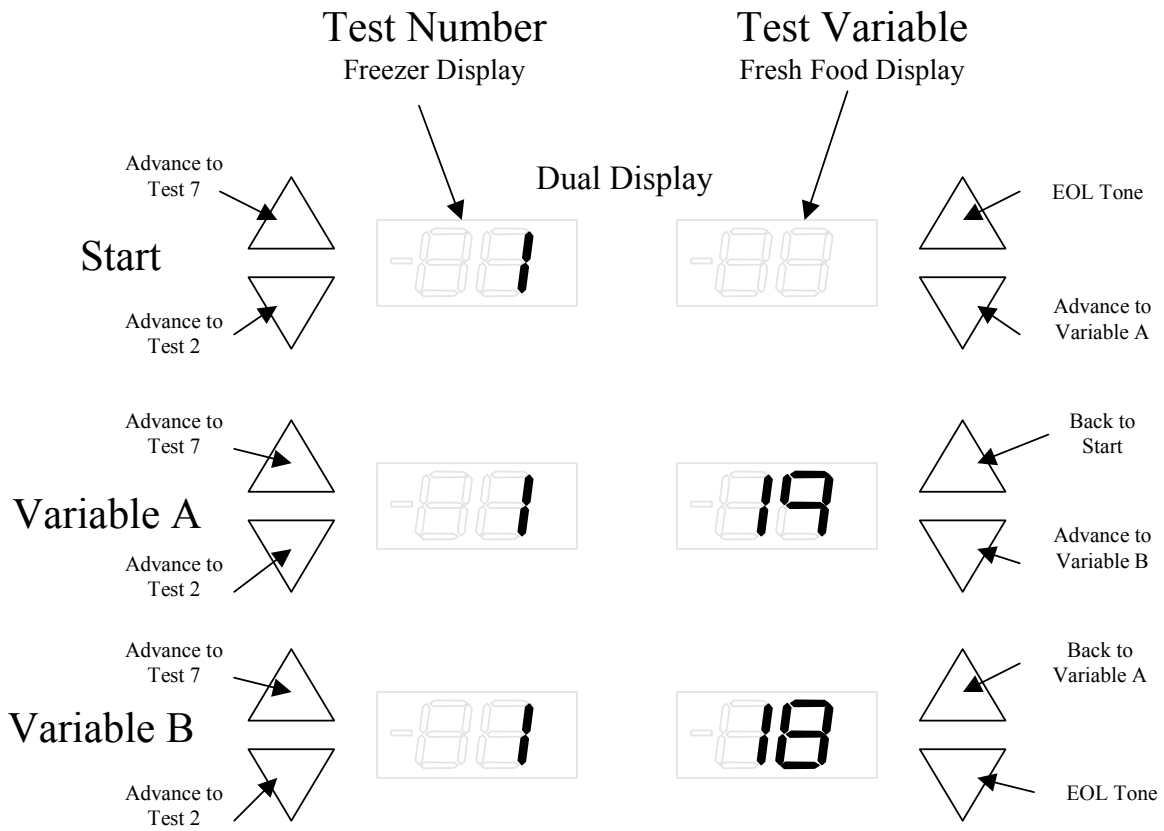

Notes: _____

Control Removal and Installation

CAUTION

Before servicing any part of the control system, the product must be unplugged and the fuse pulled or circuit breaker turned off to prevent damage to the product, control system, or personal injury to the servicer.

To service the control board you must remove the frame around the dispenser housing by pulling straight out at the top corner and working your way around the frame, pulling it out of the grove in the door.

Then remove the two screws at the top of the control. Now you can lift up on the control assembly while you tip it out at the top. This will allow you to remove the control assembly from the door.

With the control out you can disconnect the Molex plugs from the dispenser housing to the control assembly. This will allow for complete removal of the control.

With the control removed, you can remove the power supply board from the back of the control by removing the 4 screws and disconnecting the wiring harness connector for the power board to the control.

NOTE

When handling and/or replacing a control board, it is important the technician have a wrist ground strap on and connected to the cabinet or another grounding position to prevent static electricity from damaging the board.

Push the new control board down into place, using caution not to damage the board on the retainer. With the board snapped all the way down in place, reinstall the control box in the top of the food compartment in reverse order from the removal instructions.

To service the power board (main power supply), open the food and freezer doors. Remove the kick plate from the bottom of the cabinet. Looking through the opening at the bottom of the cabinet on the left side, you can see the plastic box containing the power board.

One screw in the middle of the front of the box holds the control box. Remove the screw and slide the control box forward. The back of the control box sits on a rail. Now the control box can be pulled out from the front of the refrigerator.

This will give you access to the wiring connectors so you can disconnect the power board and pull the control box out from the front of the refrigerator.

The new power board will come installed in the plastic box. This will prevent shipping damage and help with the installation.

Start the control box into the opening and reconnect the wiring, using caution to make sure the wires are all the way plugged in. Now you can push the control box back in place and reinstall the screw. There is a 3 amp fuse mounted on the control board that is used to protect the board from voltage surges.

NOTE

The Ambient sensor is used to sense when the conditions go above 90 degrees. It changes value or calculation for compressor speed. If this sensor should fail, it will default to the 90 degree value. It will be difficult for anyone to detect when this sensor fails. For example: say the compressor is running a 30% of its capacity, when it reaches 90 degrees it may change to 33% of it's capacity.

Damper Removal

To replace the damper, pull the cover straight off after lifting up the light shield and removing the screw in the back section of the cover holding it to the back of the food compartment liner.

Remove this screw

With the cover removed, you can reach down the right side of the damper control from the top and feel a release tab. Push out on the tab and tip the damper out from the top.

With the damper tipped out release the tab in the center of the electrical connector and unplug the wire harness from the damper. Now the damper can be removed from the product.

NOTE

Stepper motors require alternating polarities of DC current to operate. This is accomplished with a circuit on the main board. Applying straight 12 V DC to the damper motor will not make the motor run and it could damage the motor windings. Only test the damper motor through the refrigerator control system.

To reinstall the damper, make sure the damper door is closed all the way then follow the removal instructions in reverse order. Use caution to make sure you get the wiring connector pushed all the way in. Make sure the seal on the damper connect with the liner and the cover seal so there are no air leaks when the damper door is closed.

To test, set the control system into Service Test Mode 2 (evaporator fan motor test) and allow the fan to run on high speed. Pass a feather or small ribbon around all sides of the damper cover and look for movement, indicating an air leak. If a air leak is present, you will need to remove and recheck the seals and reinstall the damper.

The food compartment temperature sensor is located next to the right hand shelf support bracket in about the middle of the back wall.

The cover over the temperature sensor can be removed by pulling straight out. This allows access to the sensor snapped into the bracket on the back wall. Pull the sensor out of the bracket and unplug it from the connector coming out of the back of the liner.

Snap the new sensor into the bracket, plug it into the connector, then push the bracket straight back into the holes in the liner.

The freezer compartment temperature sensor is located inside the housing that supports the ice bucket. The auger motor and solenoid are mounted into the back compartment of the housing.

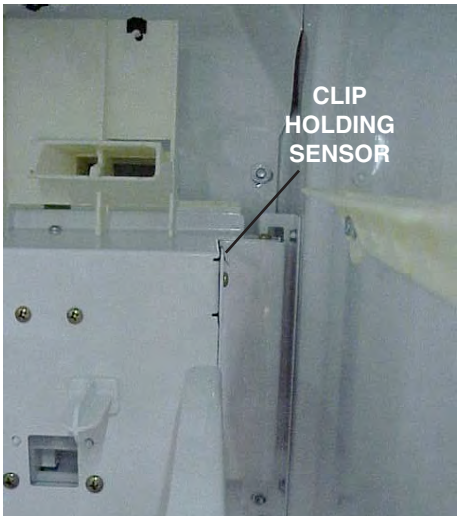

To replace the sensor, remove the ice bucket, then remove the two screws at the bottom of the housing that hold the housing assembly to the rails attached to the liner. With the screws removed, lift the housing up about 1/2 inch and pull forward. Holding the housing assembly in one hand, reach over the assembly and unplug the wiring harness from the connector coming out of the back of the liner. Turn the assembly around. The sensor is in the top corner, next to the cube ice solenoid.

Remove the sensor from under the clip, disconnect from the connector plug, and replace. Reassemble in reverse order.

NOTE

To test the thermistors, check the temperature in the location of the thermistor.

Use the chart on the next page to test the thermistor for proper resistance at the temperature you are making your test at.

Food Compartment Light Switch

The food compartment light switch is installed in the top hinge cover. Remove the screws holding the hinge cover in place and lift the cover up. You can now remove the wires from the old switch and remove the switch form the cover. Reinstall in reverse order.

Freezer Compartment Light Switch

The freezer compartment light switch is installed in the top hinge cover. Remove the screws holding the hinge cover in place and lift the cover up. You can now remove the wires from the old switch and remove the switch form the cover. Reinstall in reverse order.

NOTE

This light switch is only controlling the freezer lighting. The dispenser switch is located in the freezer compartment on the left side and is controlled by the inner door panel on the freezer door contacting the actuator on the switch.

Lighting Control

This lighting control allows the lights to ramp up to full intensity whenever a door is opened and ramp down when the door is closed. The lighting control is part of the power board, located under the freezer compartment behind the bottom grille.

Temperature Resistance Chart for Negative Temperature Coefficient Thermistors (± 2 %)

Temperature F	Ohms	Temperature F	Ohms
-20	163,823	11	60,352
-19	158,343	12	58,545
-18	153,066	13	56,798
-17	147,984	14	55,109
-16	143,088	15	53,476
-15	138,372	16	51,897
-14	133,828	17	50,369
-13	129,449	18	48,892
-12	125,229	19	47,462
-11	121,161	20	46,076
-10	117,240	21	44,741
-9	113,460	22	43,447
-8	109,814	23	42,193
-7	106,298	24	40,981
-6	102,908	25	39,806
-5	99,637	26	38,670
-4	96,481	27	37,569
-3	93,436	28	36,503
-2	90,498	29	35,471
-1	87,662	30	34,472
0	84,925	31	33,504
1	82,283	32	32,566
2	79,732	33	31,658
3	77,268	34	30,778
4	74,890	35	29,926
5	72,592	36	29,100
6	70,373	37	28,300
7	68,229	38	27,524
8	66,158	39	26,773
9	64,156	40	26,044
10	62,222	41	25,338

Temperature F	Ohms	Temperature F	Ohms
42	24,653	75	10,500
43	23,989	76	10,246
44	23,346	77	10,000
45	22,721	78	9,760
46	22,116	79	9,527
47	21,528	80	9,300
48	20,958	81	9,079
49	20,405	82	8,864
50	19,869	83	8,655
51	19,348	84	8,451
52	18,843	85	8,253
53	18,352	86	8,060
54	17,876	87	7,872
55	17,414	88	7,689
56	16,965	89	7,511
57	16,529	90	7,338
58	16,106		
59	15,695		
60	15,296		
61	14,909		
62	14,532		
63	14,166		
64	13,811		
65	13,465		
66	13,130		
67	12,803		
68	12,486		
69	12,178		
70	11,878		
71	11,587		
72	11,304		
73	11,028		
74	10,760		

Water Systems

Water for the ice maker and water dispenser is controlled by a dual coil valve and a single coil valve joined together as one. It's mounted just to the right of the condenser on the cabinet. Plastic tubing connects the water valve/valves to the ice maker fill tube, the water dispenser, and water filter (on models so equipped).

Water Valve

Counter Depth models have 1 dual coil valve and 1 single coil valve (see figure H1). The green coil on a dual coil valve is for the ice maker and the yellow coil is for the water dispenser. The beige coil on the single coil valve is energized for both water for the ice maker and dispenser. Plastic tubing connects the primary water valve to the filter, water tank, and to the secondary valve.

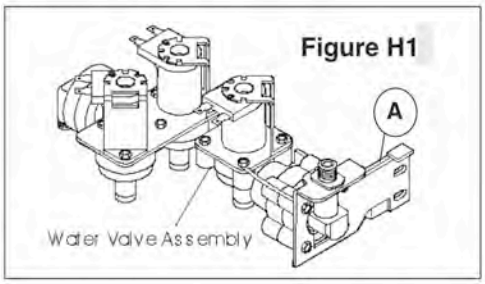

Figure H1

On models with a single coil valve for a primary, you have 2 diodes in the wiring harness connecting the coil of the single coil valve to the 2 coils of the dual coil valve. The diodes are used to prevent current leakage from opening both coils on the dual coil valve every time the single coil valve is energized.

If a diode is shorted, when the single coil valve opens, current leakage through the shorted diode will cause both coils on the secondary valve to open and you'll have water going into the ice maker and coming out the door at the same time. If the the diode fails in the open position, the coil on your secondary valve will open, but the coil on the primary valve will not. As a result, you will not get water to the ice maker or dispenser. Both doides can be checked with an ohmmeter to see if they are opened or shorted.

The coils on all water valves can be checked with an ohmmeter to see if the coils are opened or shorted. If the coil checks bad, replace the coil. If the coils check good and water pressure is between 20-120 psi, and the valve will not allow water to flow through, replace the valve. It is not necessary to replace the whole valve assembly if one coil is bad. The two valves can be separated by inserting a screwdriver at point A in Figure H1.

PureSouce Water Filters

For models with a Front Filter (see Figure H2) . The water filter must be changed at a minimum of twice a year. But, under certain water conditions, such as large concentrations of calcium, alkali, or other particulate matter in the water, a filter may require changing more frequently. A good way to judge whether the filter needs to be replaced is when the water flow to the dispenser starts slowing down and there has been no change to the water pressure to the product. Operating water pressure should be a minumum of 20-100 psi.

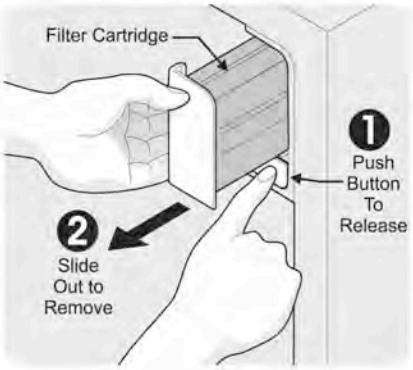

Figure H2

NOTE

The condition of the water filter also has a large affect on the operation of the ice maker. When the filter slows down flow to the door, it is also slowing down flow to the ice maker. This can reduce the number of ice cubes made per cycle as well as producing small cubes that can jam the ice maker by getting caught between the ejector and the stripper.

The part number for the Electrolux Air & Water Filter Combo is EAFWF01.

Water Tanks

Counter Depth refrigerators will have a roll tube tank assembly as shown in Figure H4.

The water line from the primary water valve (single coil valve) goes behind the trim, located on the right side of the inside food compartment liner, to the water filter. From the water filter, the line goes to the water tank, then to the secondary water valve (two coil valve). The two coil valve dispenses water to the ice maker and to the dispenser in the door. By filling the ice maker for the water tank, you will get chilled water to the ice maker helping to increase ice production. See Figure H5 for water system flow diagrams.

Figure H4

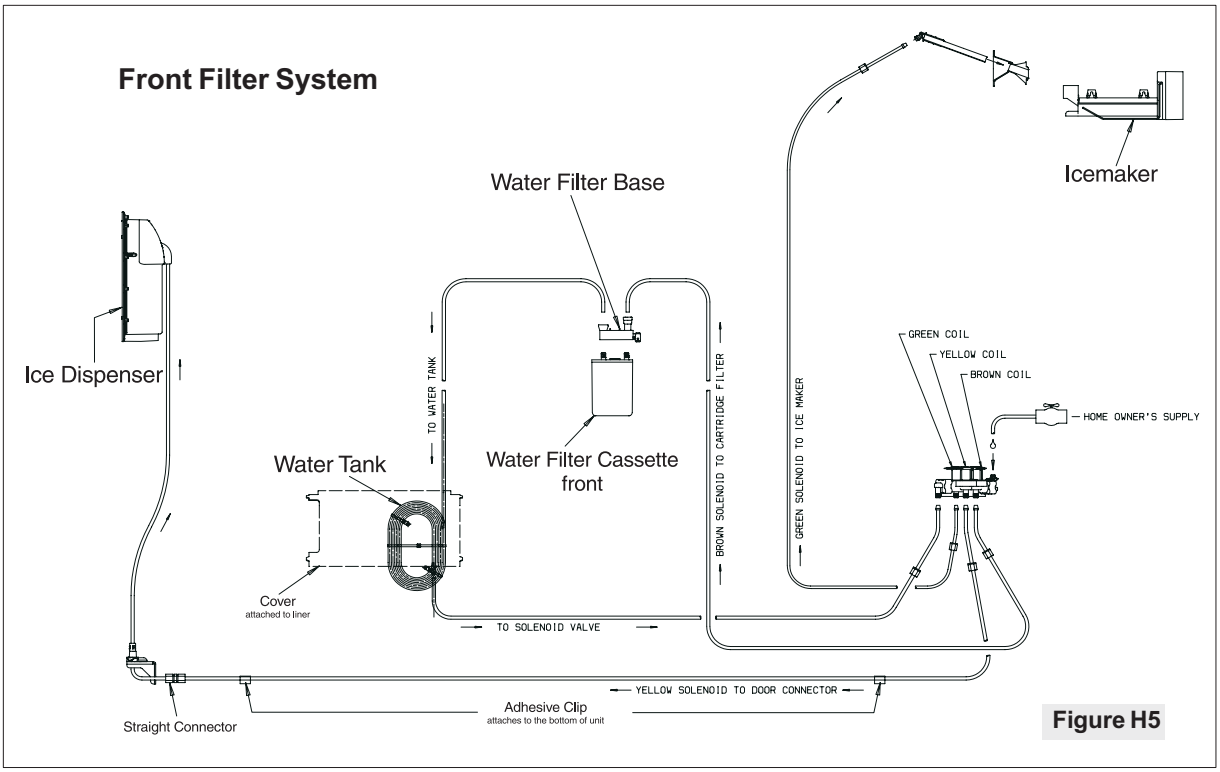

Figure H5

To Test The Water Fill System

The wiring harness has two diodes in the line between the fill switch on the ice maker and the green coil of the secondary water valve, as well as between the water switch or relay on the freezer door and the secondary valve. The diodes are part of the wiring harness.

If the diodes fail open, the primary valve will not open for ice and/or water depending on what diode is open. The open diode will not affect the coil on the secondary valve. The secondary valve will open but if the primary valve does not open, you will not supply water to the secondary valve.

Resistance Check

To test the diodes you can use an ohm meter with at least a 10K ohm or higher scale. Take a reading across the diode, then reverse your leads and take another reading. The diode should check 10 times higher in one direction than the other.

Voltage Check

You can also use a volt meter to check the circuit. Connect a volt meter to the water valve coil of the primary valve, and connect a second meter to the green coil of the secondary valve. Start Icemaker into the harvest cycle by holding the Icemaker ON/OFF switch in the ON position until the sweep arm advances to the 2 o'clock position. Then let go of the switch and let the Icemaker advance through a cycle on it's own. A voltage check on the primary valve should yield 42-58 VAC, which is normal and 95-105 volts at the secondary (green coil).

Digital Meter

If you are using a good meter you will read between 0-10 volts with a open diode on the primary valve, and over 90 volts at the secondary.

Voltage Drop From Heater

In checking the voltage on a ice maker fill, you must keep in mind that the coils of the water valves are in series with the heater on the ice maker. The resistance of the heater will cause a drop in voltage. Example: If you have 110-120 volts at the outlet with the product running, then 92-101 volts will be present at the green coil of the secondary valve.

Valve Coil

The production valves use a 20 watt coil to open the valve. This should open the valve down to about 90 volts at the green coil of the secondary valve. If the voltage is lower than 90 but above 80, you can install a 50 watt service coil (Part Number 5304401081). Keep in mind, you must replace the coil on the primary and the green coil on the secondary valve to resolve the problem.

Voltage Readings are Different Between Primary and Secondary Valve Coils

If you are getting 10 volts or less at the primary valve, but you are getting 85-100 at the secondary, you have a bad diode. If you are getting 48-58 volts at the primary valve and 90 or higher at the secondary, this is normal. With the current flowing to the primary valve coil through the diode, you are getting 30 cycle instead of 60 cycle current at the coil of the primary valve. Because of this, your meter will only read about 1/2 the voltage that is going to the coil.

No Water at Door

If the ice maker is operating but you cannot get water out the door, the test and operation of the diode is the same as for the ice maker, except for the voltage readings. On the water side, you should read the same voltage at the coil of the secondary valve as you have at the outlet. On the primary valve, the voltage should read 60-70 vac. If the voltage is low at the primary but good at the secondary, you have a bad diode. If the voltage is low at both the primary and secondary, you have a bad connection or a bad switch in the door dispenser.

Diode Kit

If you have a problem with the diodes,order the diode kit (part number 5303918287. See Figure H8.) The diodes are part of the wiring harness for the machine compartment.

Checking Water

If you do your voltage checks and find you have the correct voltage at the coils and the valve is not letting water through, replace the valve. To see which valve is bad, disconnect the water line from the filter to the inlet of the secondary valve. Place the line in a bucket.

Ice Maker Valve

Run the ice maker through a fill cycle and see if water will pass through the valve **(Green Coil)** and the filter into a bucket. If it does, replace the secondary valve. If it does not, remove the primary valve, disconnect the outlet line from the primary valve and run the ice maker through a fill cycle. If there is still no water, replace the primary valve. If water is coming through, replace the water filter.

Chilled Water Valve

Place a glass against the actuator and push in to see if water will pass through the valve **(Yellow Coil)** and the filter into a bucket. If it does, replace the secondary valve. If it does not, remove the primary valve, disconnect the outlet line from the primary valve, then place a glass against the actuator and push. If there is still no water, replace the primary valve. If water is coming through, replace the water filter.

Low/No Voltage At Coil(s)

One point we need to cover in our testing is good connections at all points in the ice and water wiring. There are a number of connections in the wiring of a refrigerator. On the ice maker, the wiring runs through the plug by the condenser fan motor up to the ice maker, back down to the same plug and into the diode harness. On the water dispenser, the wiring runs from the plug by the condenser fan motor to the plug at the bottom of the freezer door, up to the dispenser, and back down through the same plugs to the diode harness. A bad connection at any of the plugs or wire terminals can stop the valves from operating. One of the problems we have found is that the connector on the water valve coils is pushed on with the valve terminal over the top of the terminal in the plug. (See Figure H9.)

Diode Replacement Kit 5303918287 For Ice & Water Model Side by Sides With A Water Filter

Figure H8

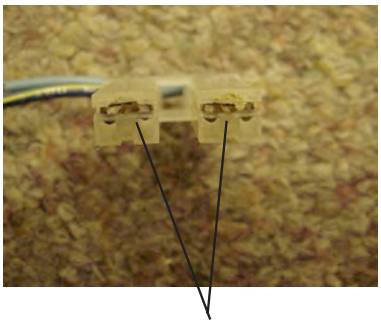

Terminals in Connector

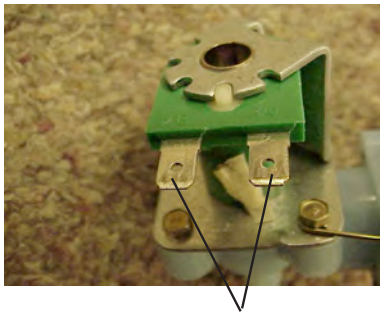

Terminals on Coil

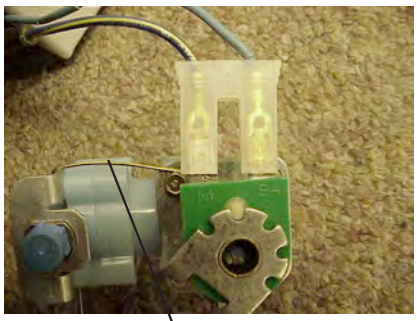

Terminal on Coil is Installed Over Top of Terminal on Left Side of Plug

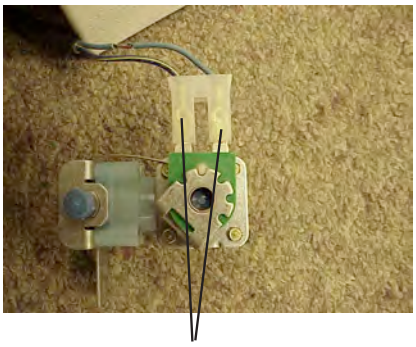

Terminals and Plug Installed Correctly

Figure H9

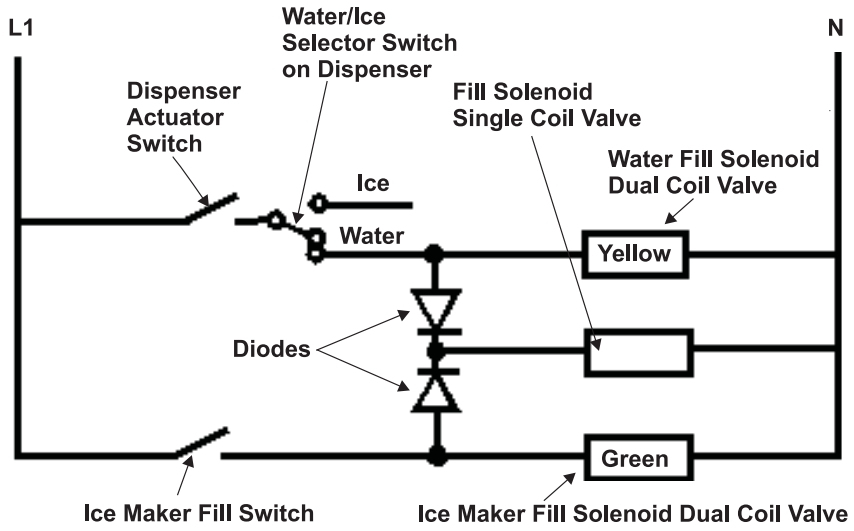

VOLTAGE READINGS AT GREEN COIL OF SECONDARY VALVE

When Ice Maker is Filling:

Voltage at Outlet	Voltage at Coil	
120 VAC	100 ± 10% VAC	Normal
100 VAC	85 ± 10% VAC	Normal at 105 VAC (Will require use of 50 watt coil)
100 - 120 VAC	20 - 76 VAC	Bad connection, Fill Switch, or Heater in Ice Maker.

VOLTAGE READING AT YELLOW COIL OF SECONDARY VALVE

When Filling A Glass With Water:

Voltage at Outlet	Voltage at Coil	
120 VAC	119 ± 10% VAC	Normal
100 VAC	99 ± 10% VAC	Normal
100 - 120 VAC	0 - 90 VAC	Bad connection or bad Fill Switch

VOLTAGE READING AT COIL OF PRIMARY VALVE

When Ice Maker is filling:

Voltage at 0utlet	Voltage at Coil	
120 VAC	56 ±10% VAC	Normal
100 VAC	48 ± 10% VAC	Normal
100 - 120 VAC	10 - 43 VAC	Bad connection, Fill Switch, or Heater in Ice Maker
100 - 120 VAC	0 VAC	Open Diode (if current is normal at secondary coil)

NOTE: You must remember that with the current flowing to the Primary Valve Coil through the Diode, you are getting 30 cycle instead of 60 cycle current at the coil of the Primary Valve. Because of this, your volt meter will only read about 1/2 the voltage that is going to the coil. The change in the cycle of current does not effect the efficiency of an electromagnetic coil.

Figure H10

Heating Product Compliance For Use On The Jewish Sabbath/Holidays

On the Jewish Sabbath/Holidays no operation resulting in an immediate change to the display or operational status of a heating product is permitted. Therefore the following can not occur consequent to the consumer opening/closing the oven door or adjusting the set temperature of the oven or cook top (temperature adjustment permitted only on the Holidays):

- lights turning on/off
- digits displayed/removed/changed
- icons displayed/cancelled
- tones initiated/cancelled
- solenoids engaged/disengaged
- fans turning on or off

Consequences that come about indirectly (15 or more seconds after consumer actions) are also prohibited if they involve lights or digital displays. We recommend that even tones generated indirectly be deactivated.

It is highly desirable that a return from a power failure should yield the same configuration as before the power failure.
On the Holiday one is permitted to raise or lower the set temperature of a cooking product in one of two ways:
- raise the set temperature when the actual heat is on and lower the set temperature when the actual heat is off
- raise or lower the set temperature by means of a device that accepts the request without response and then fulfills the request only after a random delay greater than 15 seconds.
To use the first method there is a requirement for some kind of indicator (such as an "ON" icon or an indicator light) that cycles with actual power or gas on/off. To use the second method, a random time delay should be built into the controls. The oven, cook tops and warming drawers should be capable of remaining on continuously for at least 72 hours. It is highly desirable to provide an oven timed bake feature in the SAB mode. This mode would be entered before the Sabbath/ Holiday. When the time is up, the oven would go off (an icon would go off to confirm this event), no tones would sound and the consumer can open the oven door without canceling any lights, icon or tones. It is highly desirable that a "blech" be capable of being placed over the operating cook top and controls while at least one burner is on at a low setting. The "blech" is a thin piece of sheet metal that should cover most of the cook top and controls. For gas cook tops, use of a the "blech" should not activate the igniters. It is highly desirable to provide a light or icon that cycles with power for at least one of the burners for an electric cook top. This would allow the consumer to raise and lower the set temperature on the Holidays as described in paragraph 4 above.