TOSHIBA 2013 L7363 Series Models

Date	Stage	Ver	Design Notes	Page	Description
2012/09/20	SR	1.00	SR Stage Release		
2012/10/04 2012/10/29	ER	1.01	R_SPI_CLK / R_SPI_CS swap	760	R_SPI_CLK / R_SPI_CS net swap in IC760 side: R_SPI_CS => IC760.33 / R_SPI_CLK => IC760.28 Res R7613 & RM761C SWAP for easy layout (2012/10/29 add)
2012/10/04	ER	1.01	Add S_CI_BUFFER_ENZ to ctrl CI Data buffer	113, 794	1. Change IC790 pin19's net name to S_CI_BUFFER_ENZ 2. Connect S_CI_BUFFER_ENZ to IC100.C7 (GPIO81) 3. reserve a pull-up resistor R1002 on S_CI_BUFFER_ENZ
2012/10/04	ER	1.01	Tuner change	755, 750	Tuner H7550 => 04A9-00DF0TB & H7501 => 04A9-00DB0TB
2012/10/23	ER	1.01	Test Point change	121, 658, 700	Chage CN741,CN742,CN743,CN652,CN162,CN100 test point size for DFM review
2012/10/26	ER	1.01	Add schumitt buffer on 796 and GPIO ctrl	104, 796	1. Add R_TSCLK_CI (from R1130 to IC794.2) & R_TSCLK (from R1131 to R7740 & R7742) 2. Add Scheumitt buffer (IC794, R7950, C7963)
2012/10/26	ER	1.01	GPIO & related circuit change for DSUB PC EDID & debug by VGA	113, 609	1. Delete DP100 and DP102 2. Connect IC100's GPIO5 -> VGA_EEP_WP (-> Q6110.G, Q6025.G & Q6026.G) GPIO16 -> M_VDBG_EN (-> IC620.7) GPIO110 -> M_DSUB_I2CCLK (-> Q6026.S) GPIO108 -> M_DSUB_I2CDATA (-> Q6025.S)
2012/10/26	ER	1.01	GPIO change from IC100 to CI BUS3 IC790	113, 669	1. Delete DP103. 2. Connect IC100's GPIO81 and R6637 by M_WP_HDCP
2012/10/26	ER	1.01	GPIO change from IC100 to CI BUS3 IC790	113, 794	1. Delete DP109. 2. Connect IC100's GPIO8 and R7900 by C_CI_BUS_ENZ
2012/10/29	ER	1.01	PJ601 change	603	PJ601 was changed to 1242-00KB000
2012/10/29	ER	1.01	Circuit Change Notes_2012/10/26: Remove below 0 ohm resistors for current measure and connect directly	117, 129, 160, 653, 665, 674, 780, 791, 901, 906	Remove Resistances list below: R1103, R1232, R1237, R1601, R1604, R1606, R1608, R6520, R6650, R6651, R6710, R6711, R6728, R7803, R7804, R7805, R7806, R7807, R7808, R7809, R7810, R7811, R7812, R7919, R7920, R9000, R9001, R9090,R9091
2012/10/29	ER	1.01	Circuit Change Notes_2012/10/26: FET Unmount and Relevant Changes in 3D GLASSES I/F	658	1. Change: R6580 100 KOhm → 4.7KOhm 2. Mount → Unmount: Q6582, R6585, R6586, R6587, R6589, C6581 3. Add: C6582 0.1UF/16V, R6590 0 Ohm, R6591 220 Ohm
2012/10/29	ER	1.01	Circuit Change Notes_2012/10/26: Insert FL909 & FL957	905, 950	1. Change Net Name of Power of IC905, Insert FL909 (220ohm/100MHz), and connected FL909 to 12V_3 2. Change Net Name of 12V, Insert FL957 (220 ohm/100MHz), and add net 12V_3
2012/10/29	ER	1.01	Circuit Change Notes_2012/10/26: Place R1218 near IC100.	135	Place R1218 near IC100.
2012/10/29	ER	1.01	Circuit Change Notes_2012/10/26: R6712 and R6713 are deleted	677	R6712 and R6713 are deleted and it connects directly
2012/10/29	ER	1.01	Circuit Change Notes_2012/10/26: T-CON POWER SW change	653	T-CON POWER SW change
2012/10/29	ER	1.01	Circuit Change Notes_2012/10/26: Tuner component fine tune	750, 751	1. Change C7506, R7514, R7557, R7714 2. Add C7524, R7610, C7617, C7563, C7731 3. Delete R7513,R7515
2012/10/30	ER	1.01	Circuit Change Notes 2012/10/26: correction	658	R6584 optional change from NC to NC4NC5NC6NC7NC8
2012/10/30	ER	1.01	Circuit Change Notes_2012/10/26: correction	950	12V & 12V_3 swap in the both side of FL957
2012/10/30	ER	1.01	Circuit Change Notes_2012/10/30: Circuit_Change_Notes_CI3	791	1. Change IC789 from TPS2553DBV-1 to R5524N001B-TR-FE 2. Remove R7911
2012/10/30	ER	1.01	Circuit_Notes_TUNER_Demod_2: SHT755 S TUNER	755	C7563 connect to R7557 & H7550
2012/10/31	ER	1.01	Test Point requested by production test	660	Add DP716 in net H_PWR4
2012/10/31	ER	1.01	R1218 NC	135	R1218: Mount -> Not Mount
2012/11/01	ER	1.01	Add DP721 for DFM	658	Add DP721 for DFM
2012/11/01	ER	1.01	Add Bead for EMI	658 700	CN652: Add FL652, FL653 CN741: Add FL737, FL738, FL739, FL740, FL741 CN742: Add FL743, FL744, FL745, FL746 CN743: Add FL747, FL748, FL749
2012/11/01	ER	1.01	Add L6541 for T-CON circuit	653	Add L6541 for T-CON circuit
2012/11/07	ER	1.01	D7410 & D7411 NC	951	Keypad D7410 & D7411 NC
2012/11/14	ER	1.01	Change R6580 => 12k Ohm	658	Change R6580 => 12k Ohm
2012/11/14	PR	1.02	Part change to reduce DDR 800MHz Emisson	658, 700	FL652, FL653: P/N: 0901-0019000 GBK160808T-300Y-N FL737-FL741: P/N: 0901-0027000 GBK160808T-121Y-S<G> FL743-FL746: P/N: 0901-0027000 GBK160808T-121Y-S<G> FL747-FL749: P/N: 0901-0027000 GBK160808T-121Y-S<G>
2012/11/28	PR	1.02	Part change to improve T-COM PWR sequence	653	C6543 was changed from 0.22uF to 1UF/25V (0603)
2012/12/05	PR	1.02	CN100 NC	121	CN100 NC
2012/12/12	PR	1.02	FL664, FL665 => 0 ohm	660	FL664, FL665 were changed to 0 ohm array for MHL
			EMI solution	600	Page 600: Add C6015, C6016, C6017, FL616~FL618 Page 602: Add C6032~C6039, FL610~FL612 Page 603: Add C6090~C6093, FL613~FL615
				160	FL619 was added for wifi
2012/12/17	PR	1.02	Change part reference	674	FL619 was renamed as FL162
			MHL VBUS / IC673 circuit change	674	Remove R6740 & Add R6735, Q6710 near IC673
			To improve the leak current from I2C	609	Remove IC620 and C6085 & Add Q6027 & Q6028
			USB connector for WLAN	160	Add R1608, R1609, R1610
2012/12/18	PR	1.02	Add test point	906	DP901 was add for IC911 pin1
2012/12/24	PR	1.02	PJ601 local use footprint for DFM	603	PJ601 change local use footprint for DFM, floating issue in 1.2mm PCB
2012/12/26	PR	1.02	ON/OFF function of the WLAN power	160	R1608 : 0 Ω -> NC R1609 : NC -> 0 Ω R1610 : NC -> 4.7K Ω
			The dischage res for T-CON PWR	653	Add R6546
2013/01/02	PR	1.02	LED luminosity is adjustted	700	R7032 : 100 -> 680Ω
2013/01/08	PR	1.02	improve X-tal accuracy for DVB-T2 & DVB-S2/S	760 770	C7614,C7615 27p -> 10p R7606 0 ohm -> 1.8Kohm C7714,C7715 6p -> 10p R7710 0 ohm -> 1.5Kohm
			improve IFAGC voltage of SoC	751	R7522 : 10Kohm -> 0ohm

Optional Information

Reference	50L7363 (Y/N) 58L7363	40L7363 (Y/N)	50L7353 (Y/N) 58L7353	40L7353 (Y/N)	50L7333 (Y/N) 58L7333	40L7333 (Y/N)	40L6363 (Y/N) 50L6363	40L6353 (Y/N) 50L6353	32L4363 (Y/N) 39L4363 50L4363	32L4353 (Y/N) 39L4353 50L4353	32L4333 (Y/N) 39L4333 50L4333 32L4332
Not Mount	NC	NC	NC + NC2	NC + NC2	NC + NC3	NC + NC3	NC + NC4	NC + NC5	NC + NC6	NC + NC7	NC + NC8
IC100	Y [MSD8881CV-W9N]	Y [MSD8881CV-W9N]	Y [MSD8881CV-W9N]	Y [MSD8881CV-W9N]	Y [MSD8881CV-W9N]	Y [MSD8881CV-W9N]	Y [MSD8841CV-W9N]	Y [MSD8841CV-W9N]	Y [MSD8841CV-W9N]	Y [MSD8841CV-W9N]	Y [MSD8841CV-W9N]
H7501	Y [TDSS-G***]	Y [TDSS-G231D]	Y [TDSS-G***]	Y [TDSS-G231D]	Y [TDSS-G***]	Y [TDSS-G231D]	Y [TDSS-G231D]	Y [TDSS-G231D]	Y [TDSS-G231D]	Y [TDSS-G231D]	Y [TDSS-G231D]
H7550	Y [TSU25-***]	Y [TSU25-E02]	N	N	N	N	Y [TSU25-E02]	N	Y [TSU25-E02]	N	N

Unihan

Title : 000. History & Description

MAIN BOARD

Engineer: CVP DM HW

Size	Project Name	Rev
A2	EU Lv.2	1.00

Date: Tuesday, January 08, 2013 Sheet 001 of 76

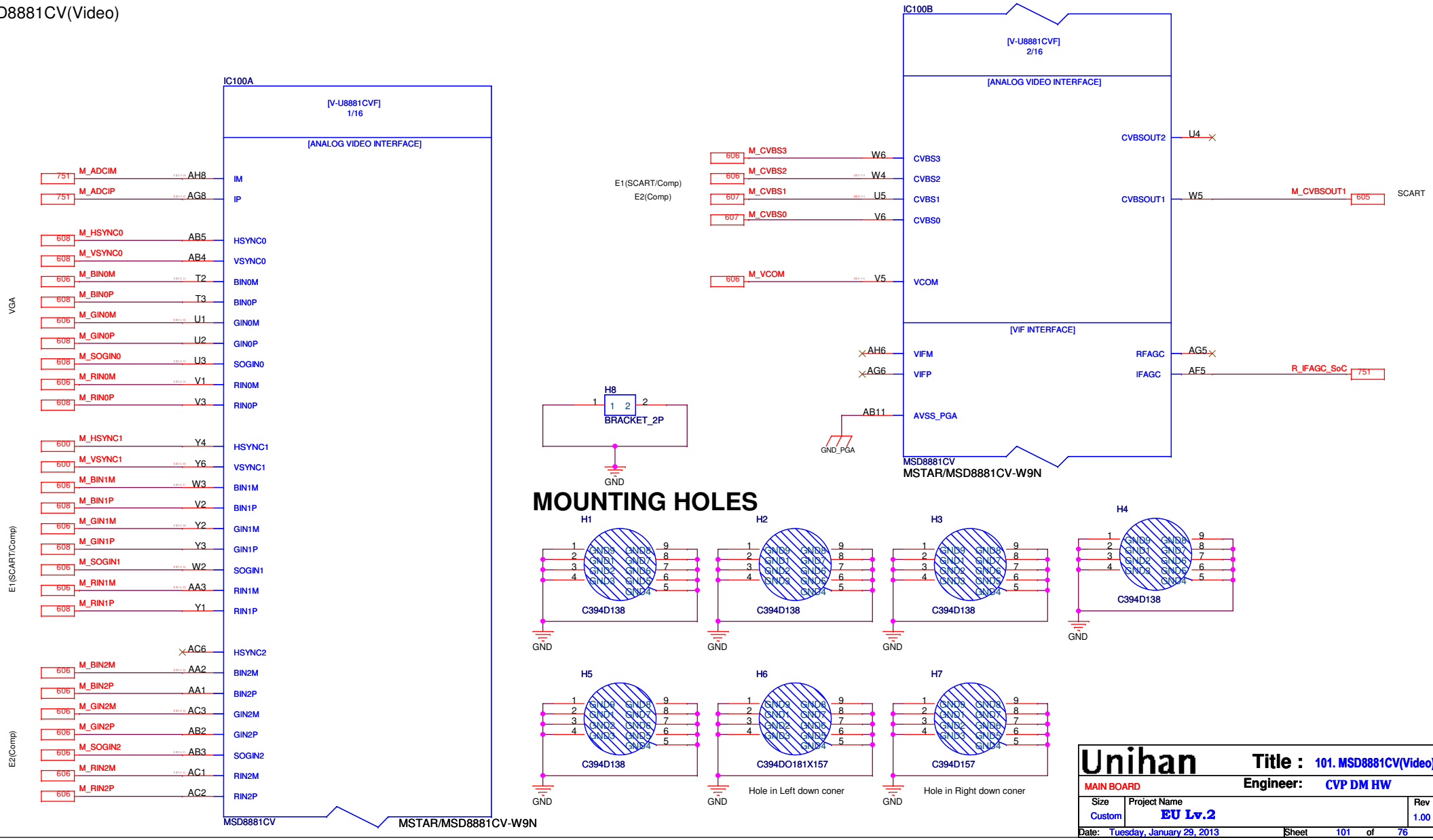

Unihan	Title : 101. MSD8881CV(Video)		
MAIN BOARD	Engineer: CVP DM HW		
Size: Custom	Project Name: EU Lv.2		Rev: 1.00
Date: Tuesday, January 29, 2013	Sheet 101 of 76		

103. MSD8881CV (Audio, SIF)

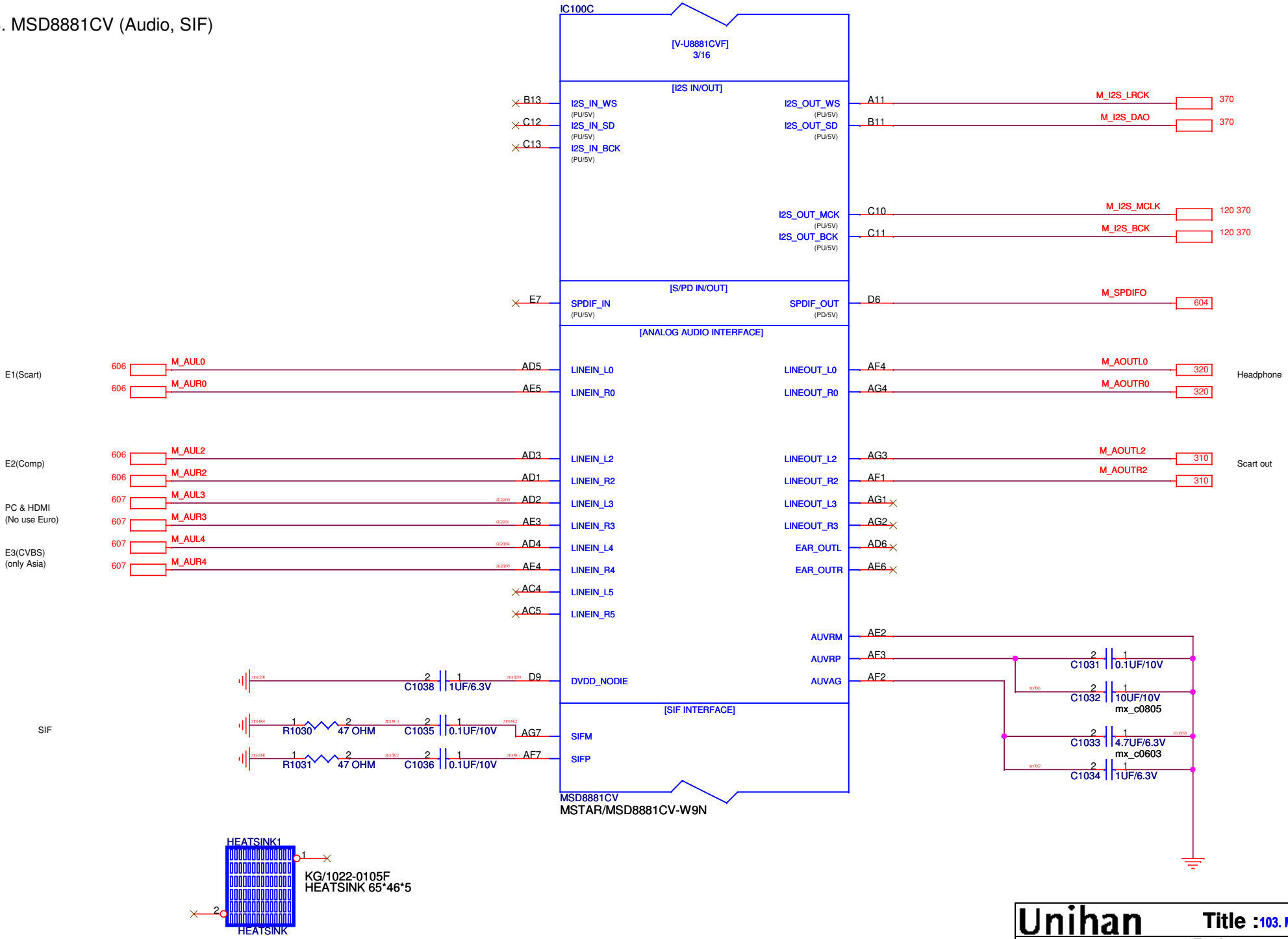

Unihan	Title : 103. MSD8881CV (Audio, SI		
MAIN BOARD	Engineer: CVP DM HW		
Size Custom	Project Name EU Lv.2		Rev 1.00
Date: Tuesday, January 29, 2013	Sheet 103 of 76		

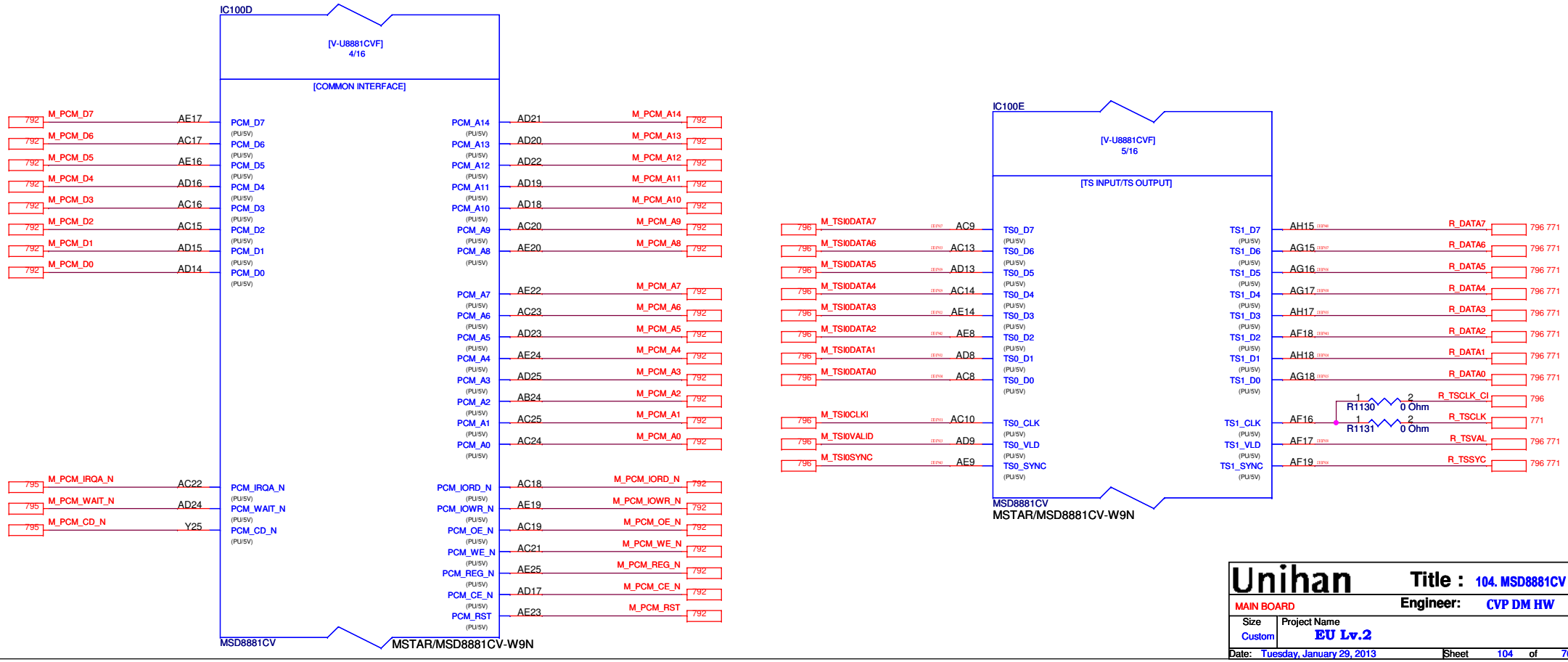

Unihan	Title : 104. MSD8881CV (CI/TS)	
MAIN BOARD	Engineer: CVP DM HW	
Size: Custom	Project Name: EU Lv.2	Rev: 1.00
Date: Tuesday, January 29, 2013	Sheet 104 of 76	

106. MSD8881CV (HDMI)

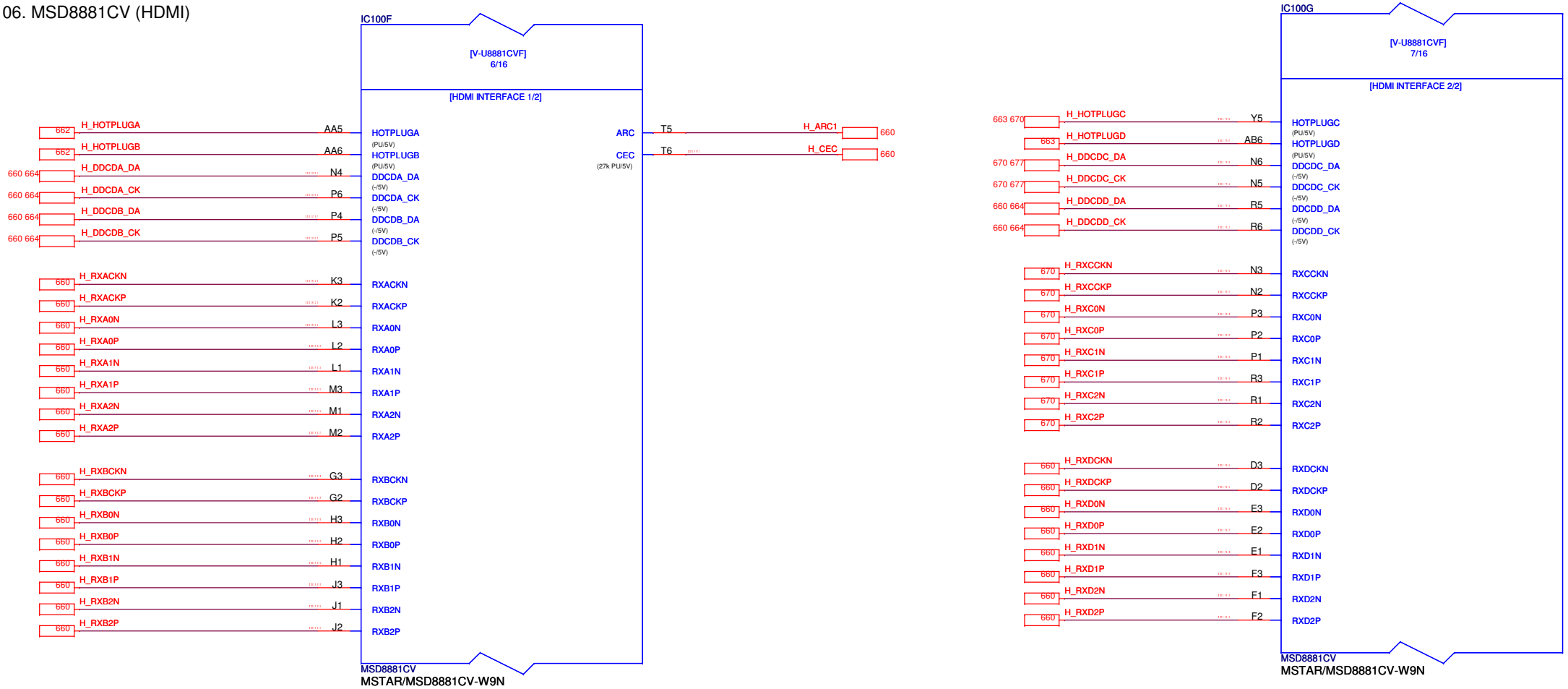

Unihan	Title : 106. MSD8881CV (HDMI)		
MAIN BOARD	Engineer: CVP DM HW		
Size: Custom	Project Name: EU Lv.2		Rev: 1.00
Date: Tuesday, January 29, 2013	Sheet 106 of 76		

108. MSD8881CV (LVDS)

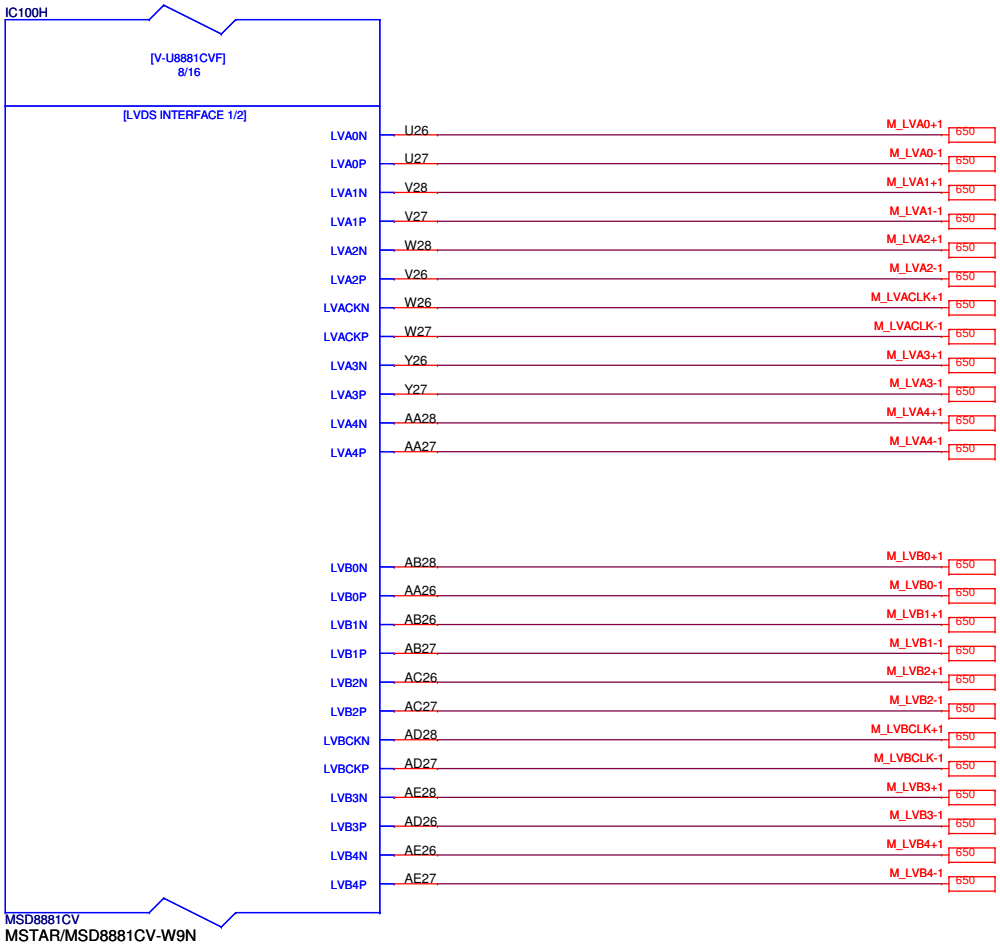

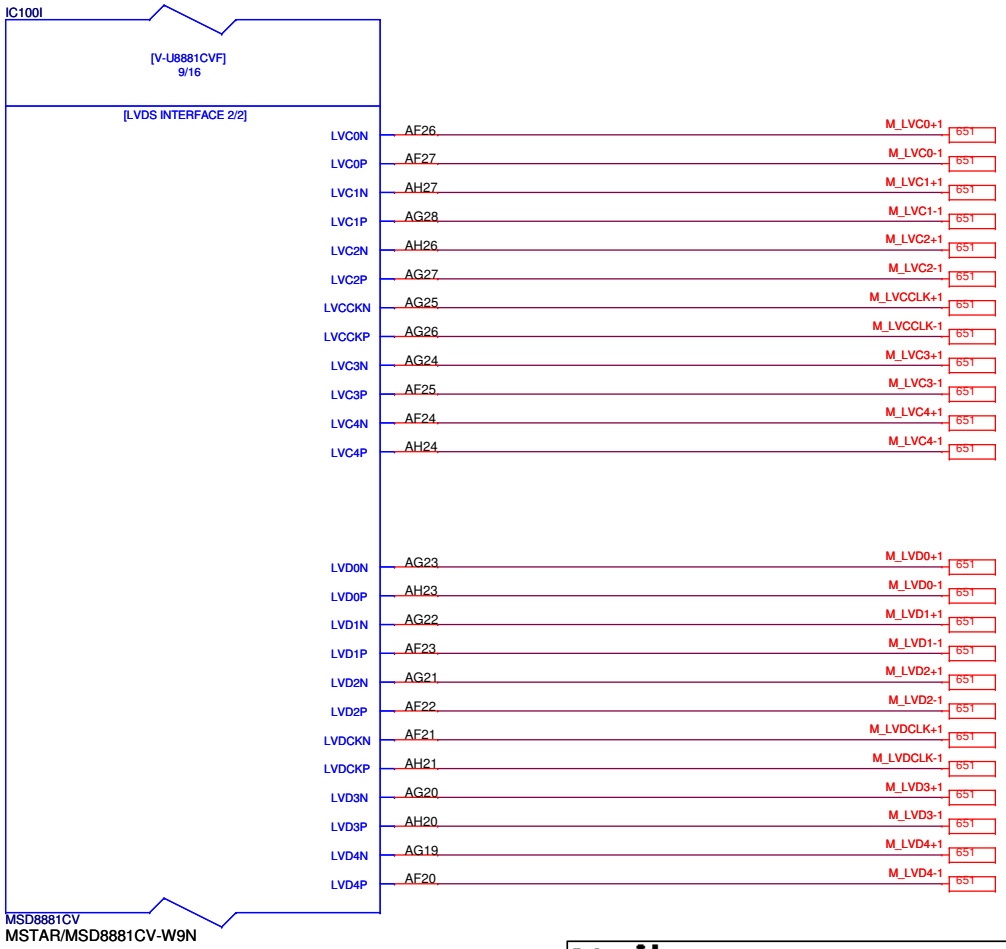

Unihan	Title : 108. MSD8881CV (LVDS)		
MAIN BOARD	Engineer: CVP DM HW		
Size Custom	Project Name EU Lv.2		Rev 1.00
Date: Tuesday, January 29, 2013	Sheet 108 of 76		

110. MSD8881CV (DDR3)

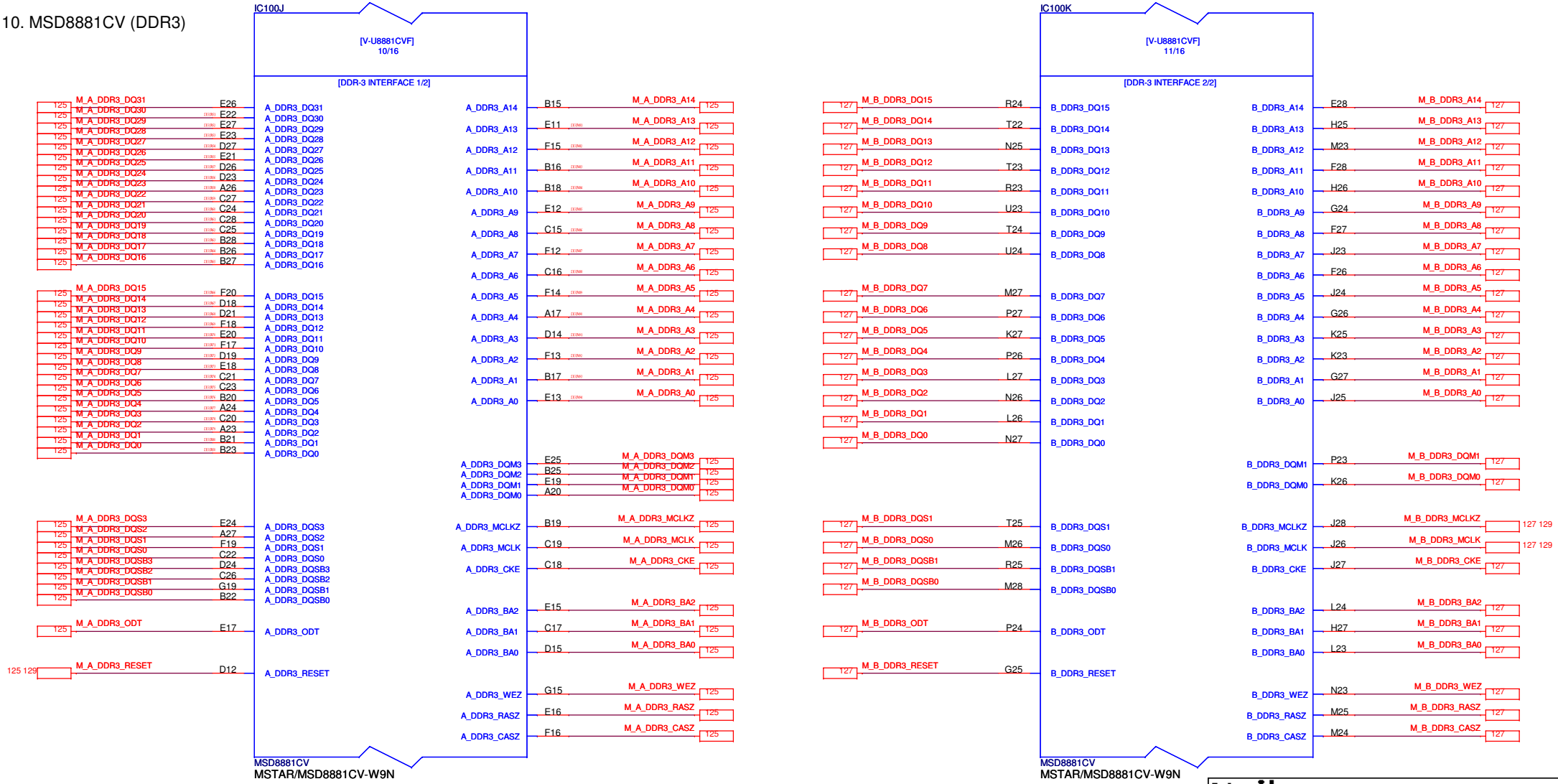

Unihan

Title : 110. MSD8881CV (DDR3)

MAIN BOARD

Engineer: CVP DM HW

Size	Project Name	Rev
Custom	EU Lv.2	1.00

Date: Tuesday, January 29, 2013 Sheet 110 of 76

112. MSD8881CV (MICS)

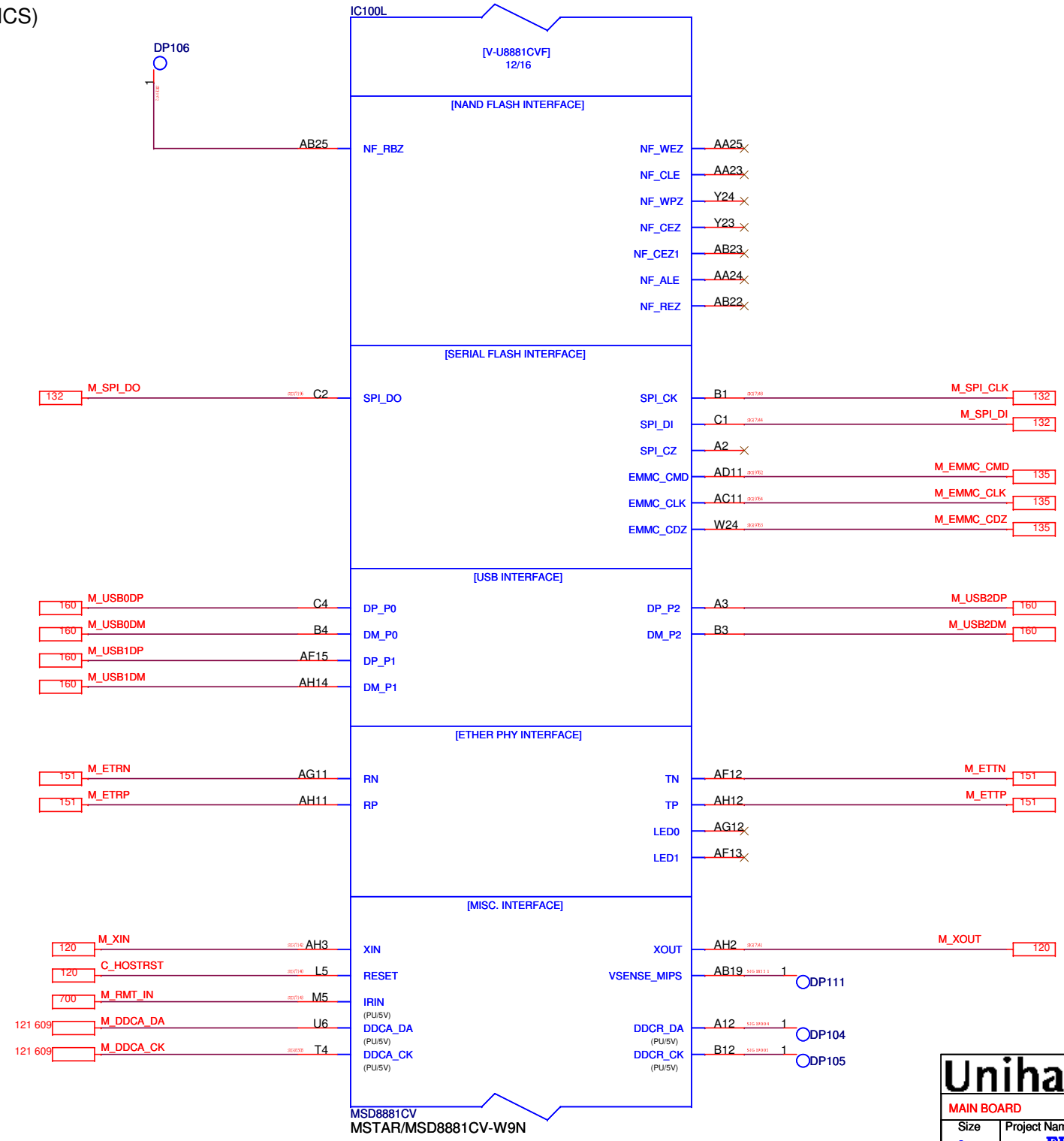

Unihan	Title : 112. MSD8881CV (MICS)	
MAIN BOARD	Engineer: CVP DM HW	
Size: Custom	Project Name: EU Lv.2	Rev: 1.00
Date: Tuesday, January 29, 2013	Sheet 112 of 76	

113. MSD8881 (GPIO)

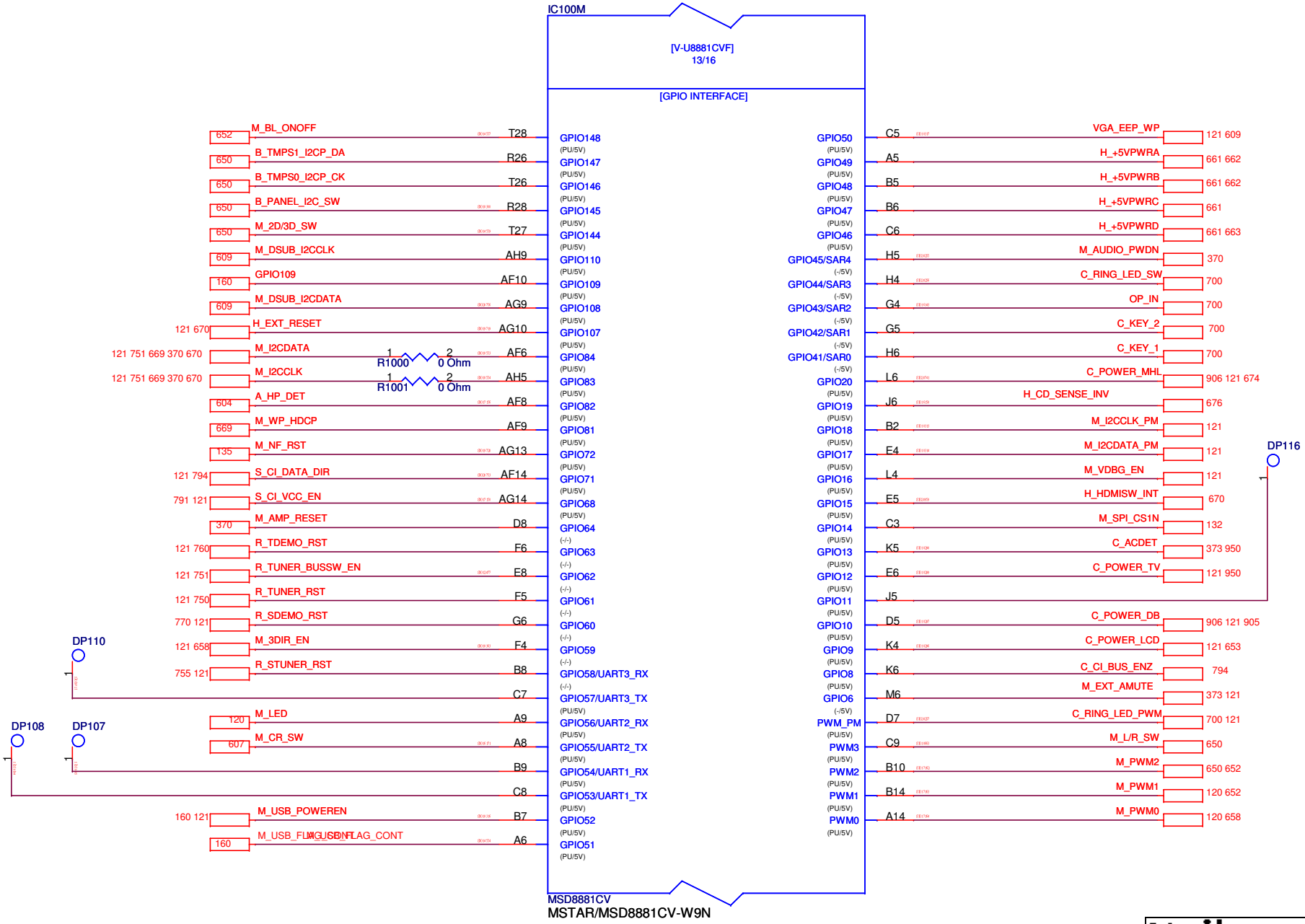

Unihan	Title : 113. MSD8881 (GPIO)		
MAIN BOARD	Engineer: CVP DM HW		
Size: Custom	Project Name: EU Lv.2		Rev: 1.00
Date: Tuesday, January 29, 2013	Sheet 113 of 76		

114. MSD8881CV (POWER)

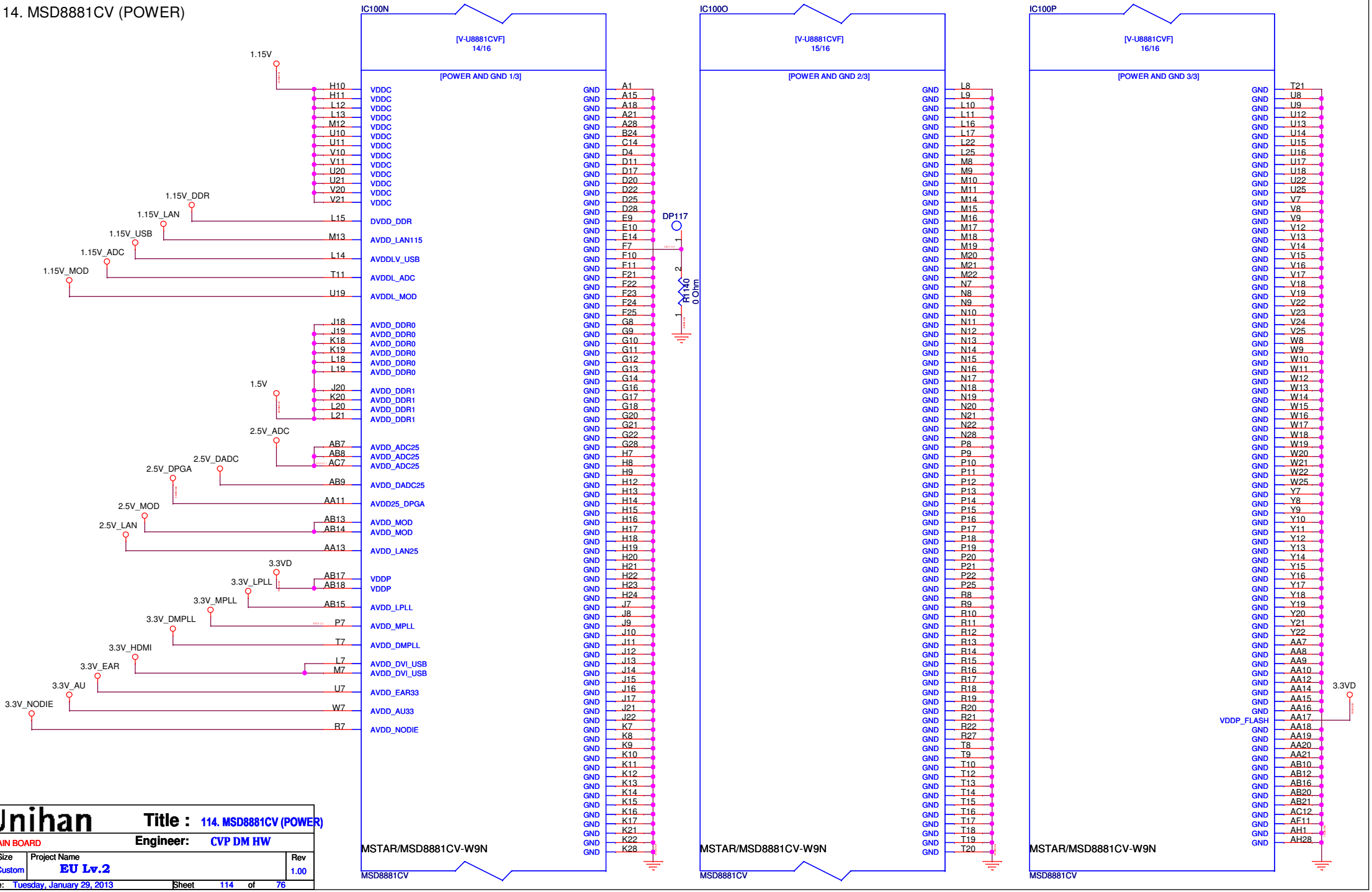

Unihan	Title : 114. MSD8881CV (POWER)	
MAIN BOARD	Engineer: CVP DM HW	
Size: Custom	Project Name: EU Lv.2	Rev: 1.00
Date: Tuesday, January 29, 2013	Sheet 114 of 76	

117. MSD8881CV POWER

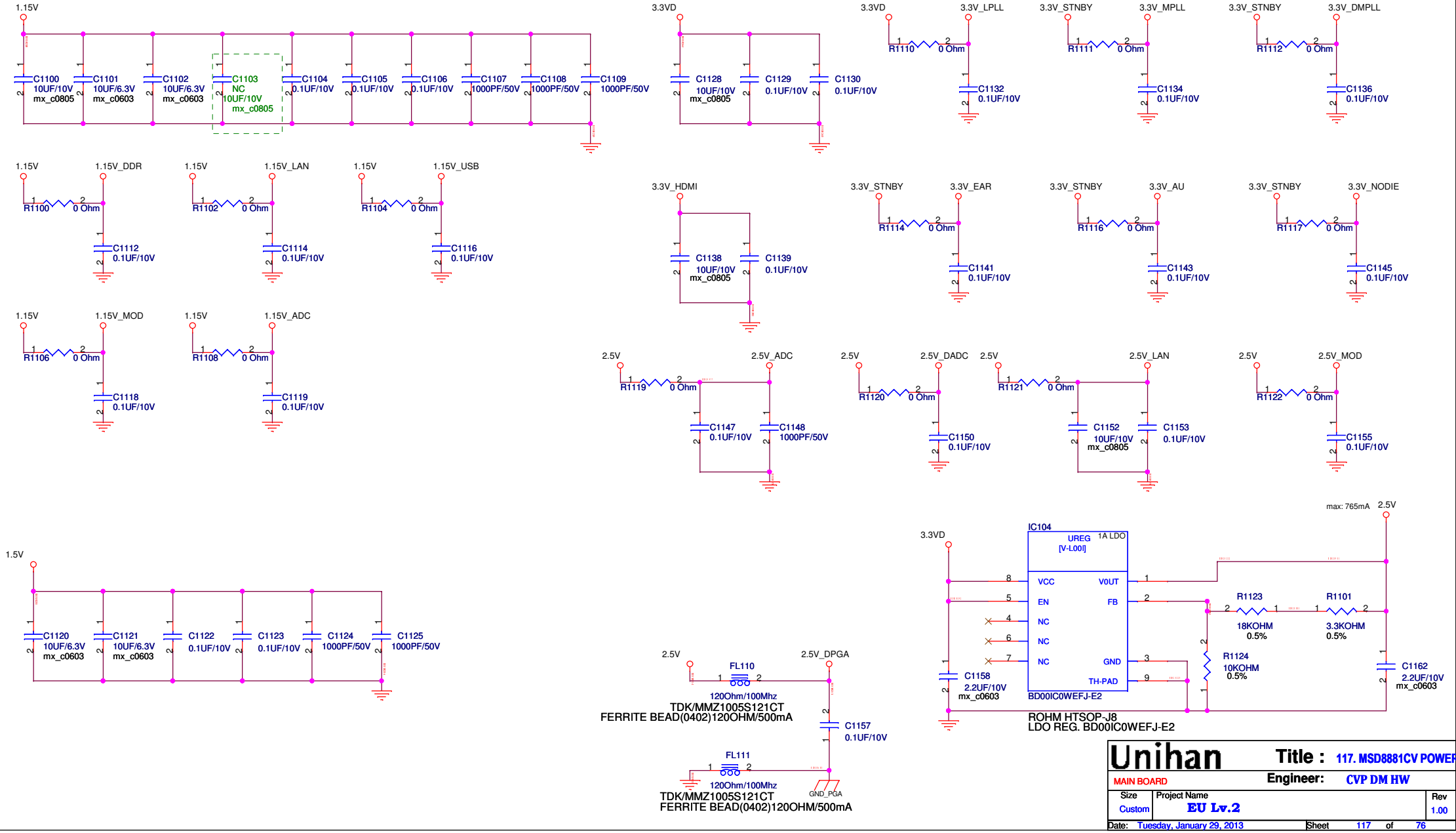

Unihan	Title : 117. MSD8881CV POWER		
MAIN BOARD	Engineer: CVP DM HW		
Size: Custom	Project Name: EU Lv.2		Rev: 1.00
Date: Tuesday, January 29, 2013	Sheet 117 of 76		

120. PERI (XTAL, RESET)

XTAL

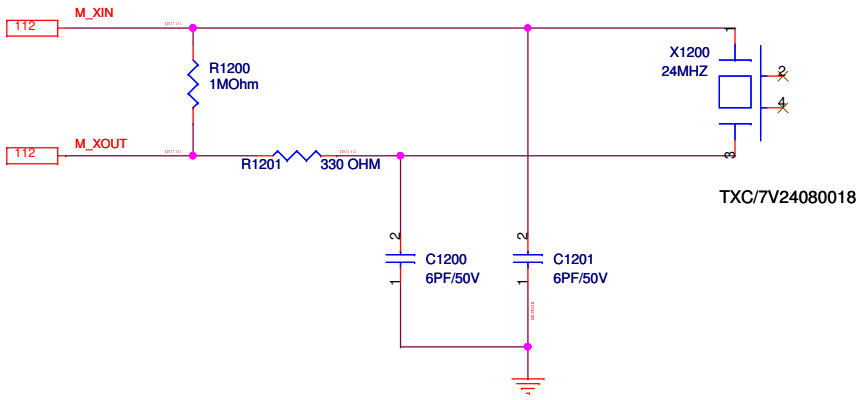

Boot Configuration

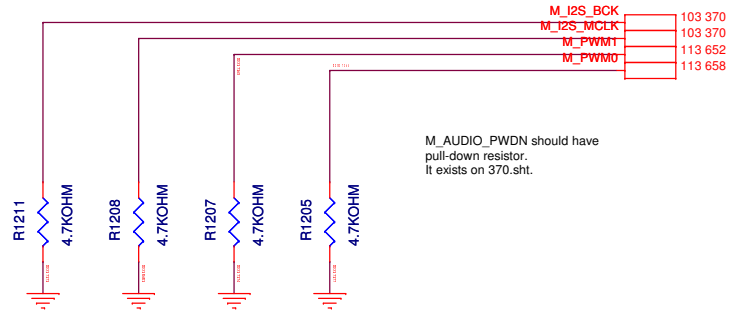

RESET

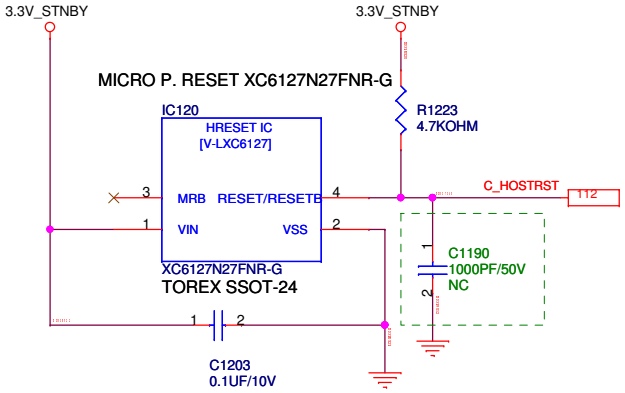

LED

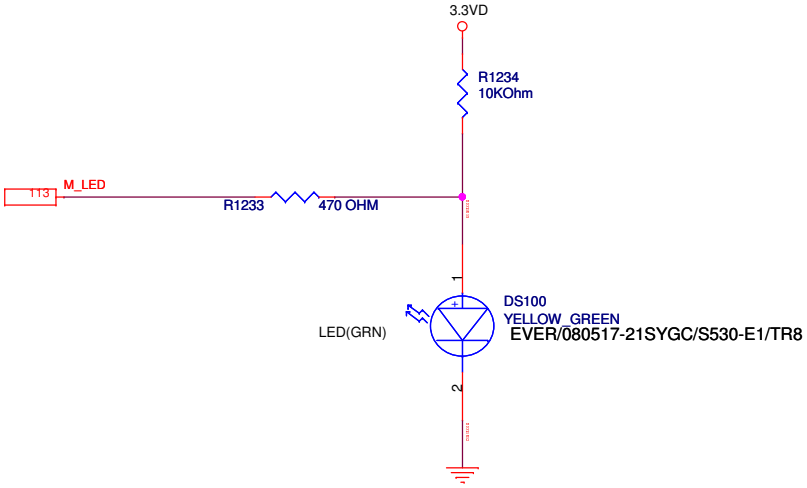

Unihan	Title : 120. PERI (XTAL, RESET)	
MAIN BOARD	Engineer: CVP DM HW	
Size: Custom	Project Name: EU Lv.2	Rev: 1.00
Date: Tuesday, January 29, 2013	Sheet 120 of 76	

121. PERI (GPIO, I2C, DBG)

GPIO

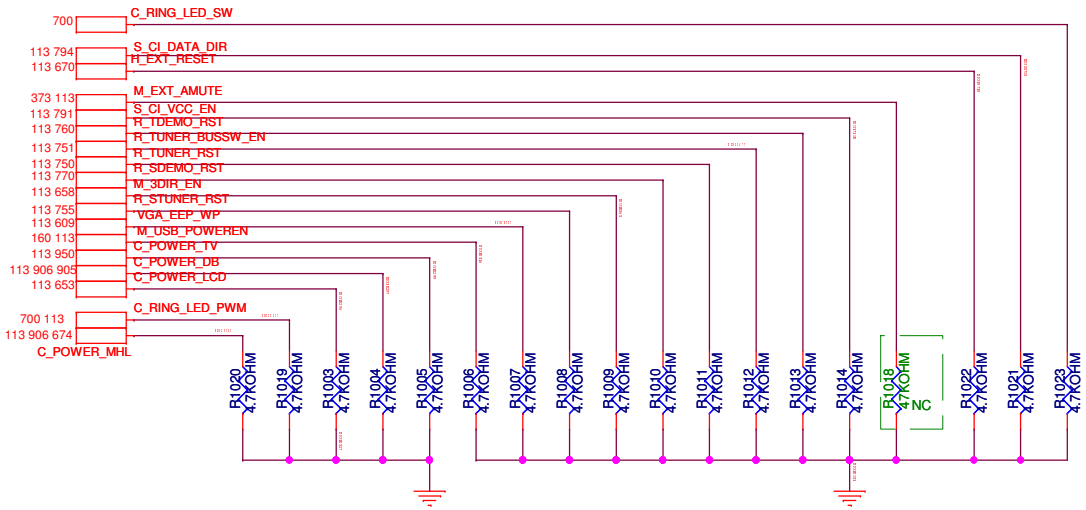

I2C

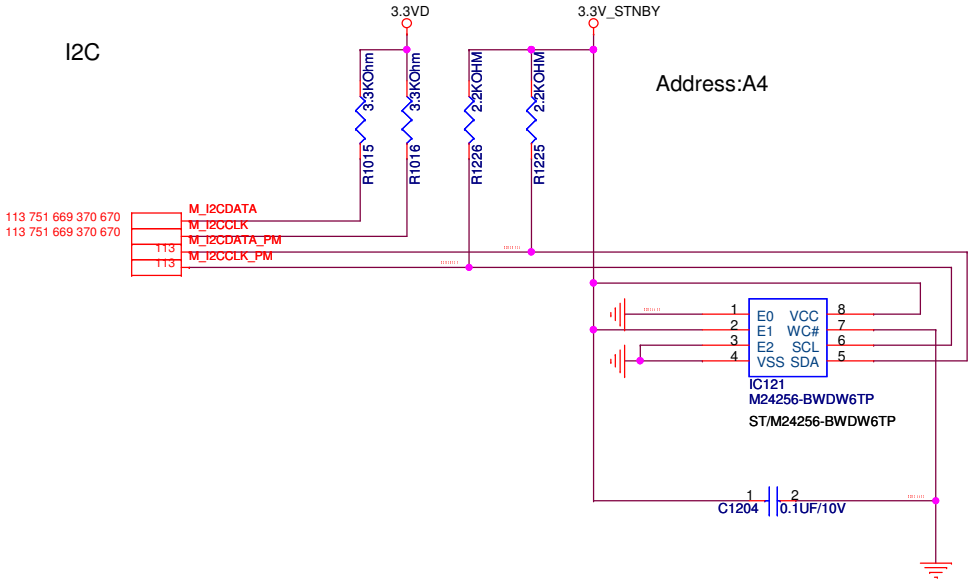

DEBUG

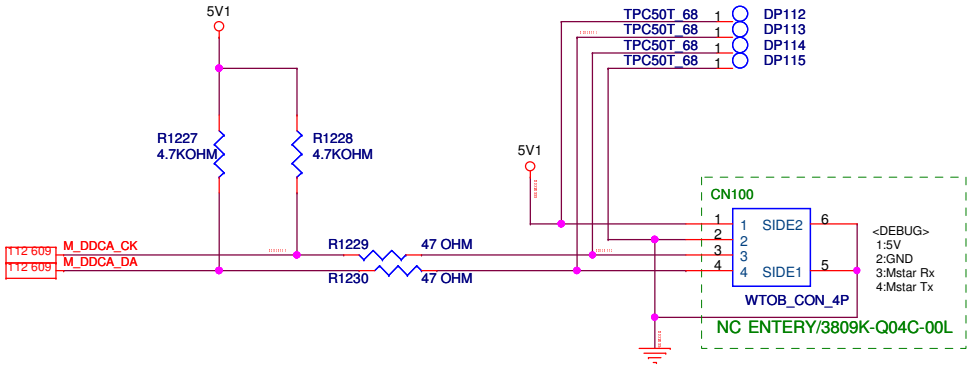

Unihan	Title : 121. PERI (GPIO, I2C, DBG)		
MAIN BOARD	Engineer: CVP DM HW		
Size: Custom	Project Name: EU Lv.2		Rev: 1.00
Date: Tuesday, January 29, 2013	Sheet 121 of 76		

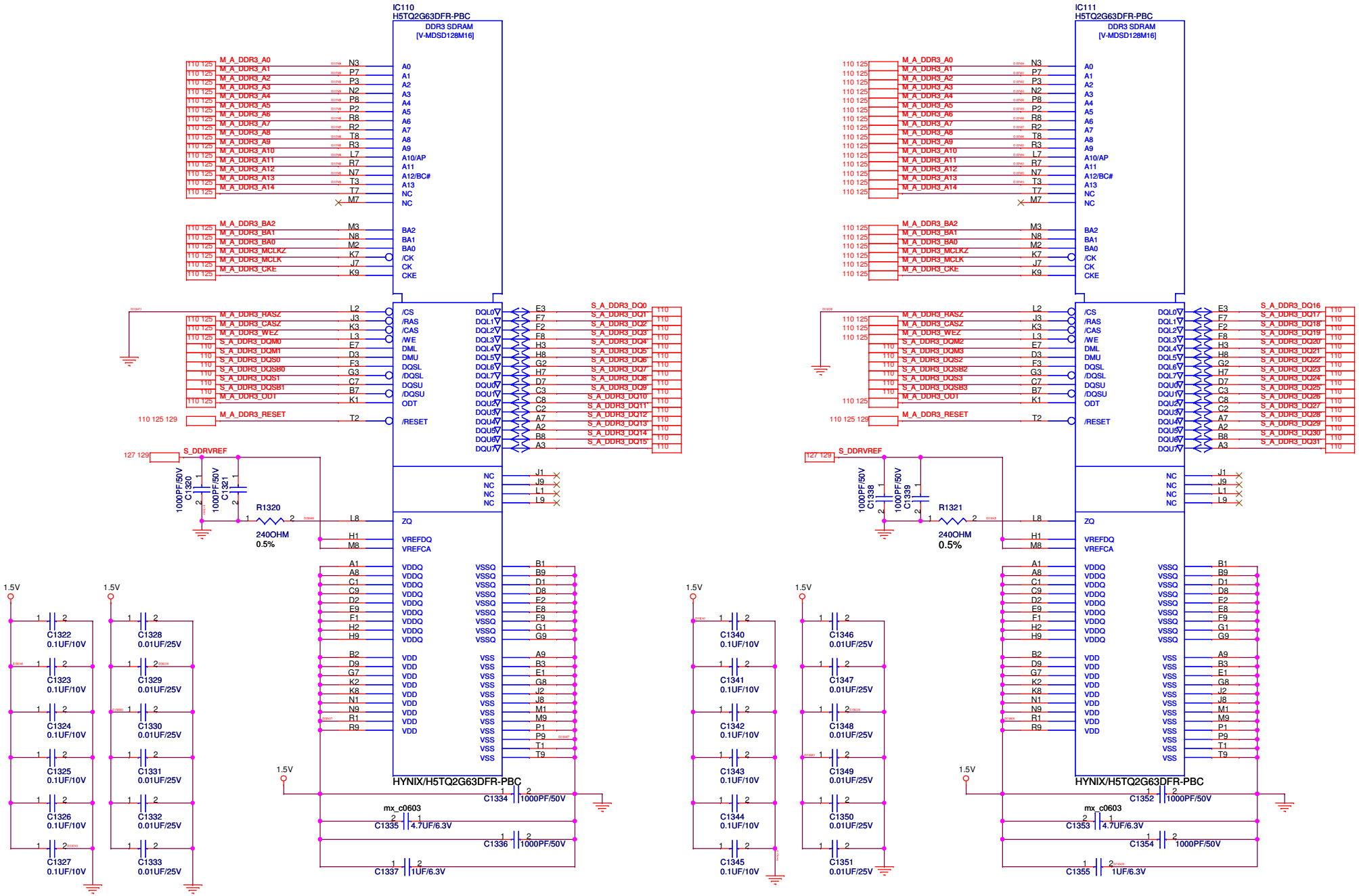

Unihan	Title : 125. DDR3 SDRAM A	
MAIN BOARD	Engineer: CVP DM HW	
Size A3	Project Name EU Lv.2	Rev 1.00
Date: Tuesday, January 29, 2013	Sheet 125 of 76	

Adding 0[ohm] Resistor

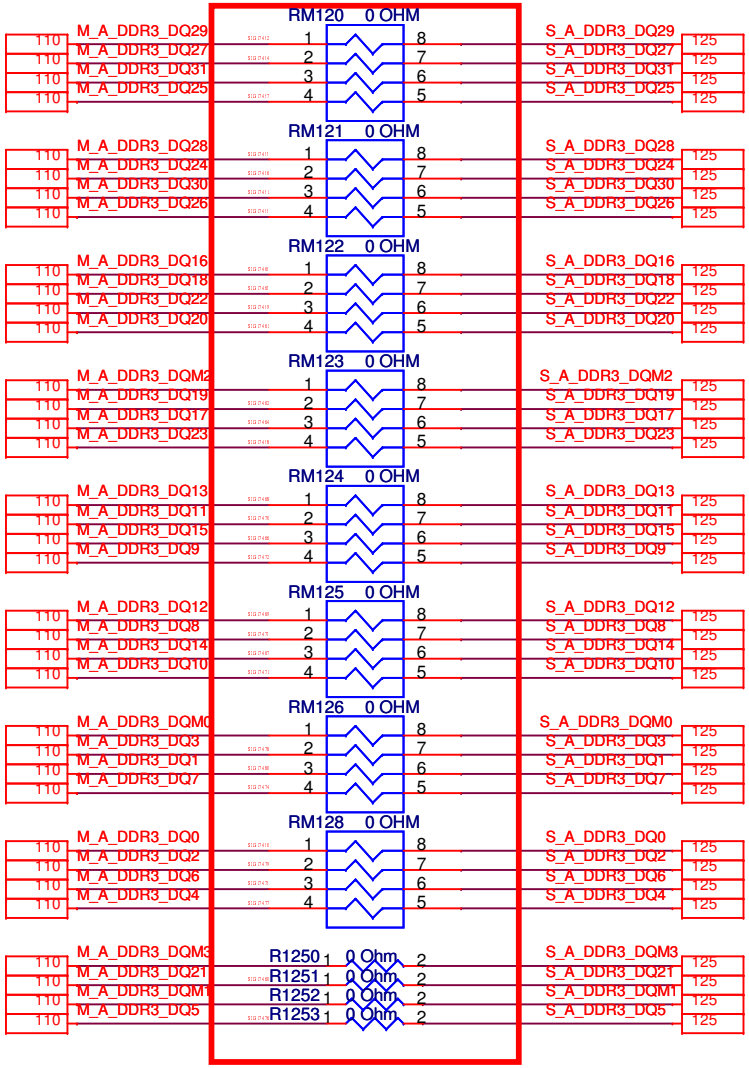

Adding 0[ohm] Resistor

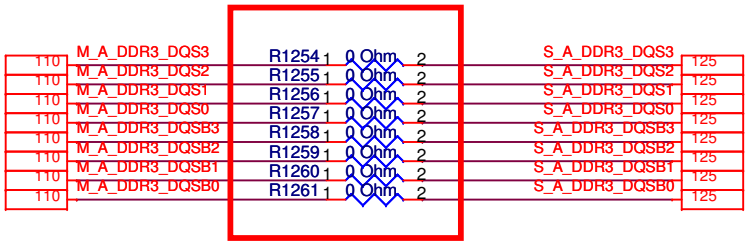

Unihan	Title : 126. DDR3 A Resistors		
MAIN BOARD	Engineer: CVP DM HW		
Size A4	Project Name EU Lv.2		Rev 1.00
Date: Tuesday, January 29, 2013	Sheet 126 of 76		

127. DDR3 SDRAM B

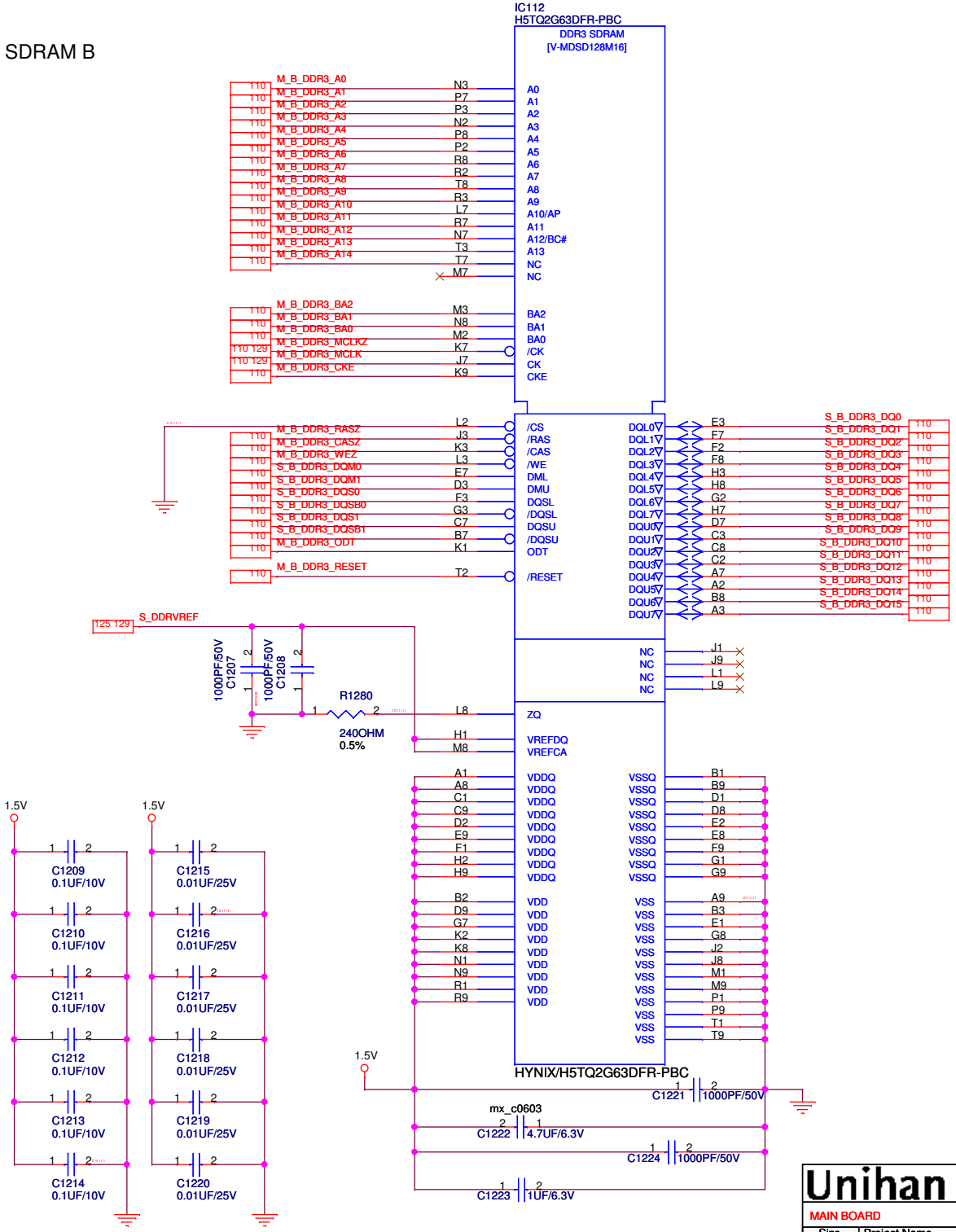

Unihan	Title : 127. DDR3 SDRAM B		
MAIN BOARD	Engineer: CVP DM HW		
Size: Custom	Project Name: EU Lv.2		Rev: 1.00
Date: Tuesday, January 29, 2013	Sheet 127 of 76		

Adding 0[ohm] Resistor

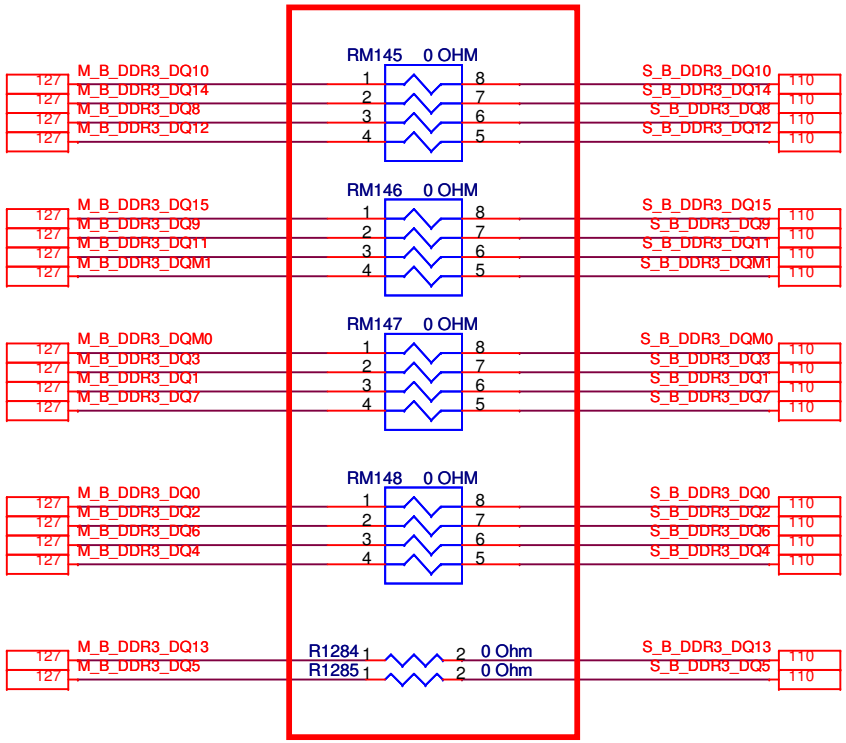

Adding 0[ohm] Resistor

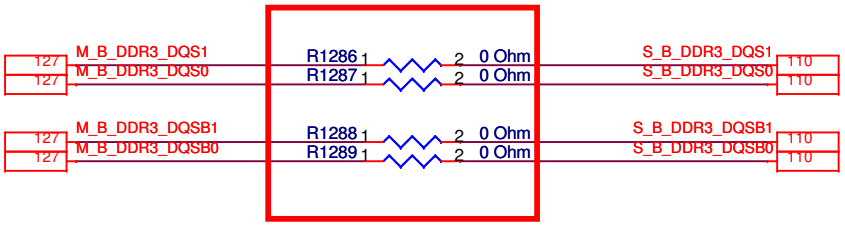

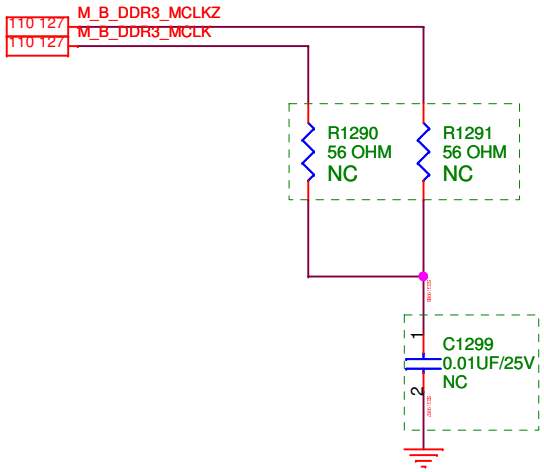

Unihan	Title : 128. DDR3 B Resistors	
MAIN BOARD	Engineer: CVP DM HW	
Size A4	Project Name EU Lv.2	Rev 1.00
Date: Tuesday, January 29, 2013	Sheet 128 of 76	

129. DDR3 SDRAM POWER

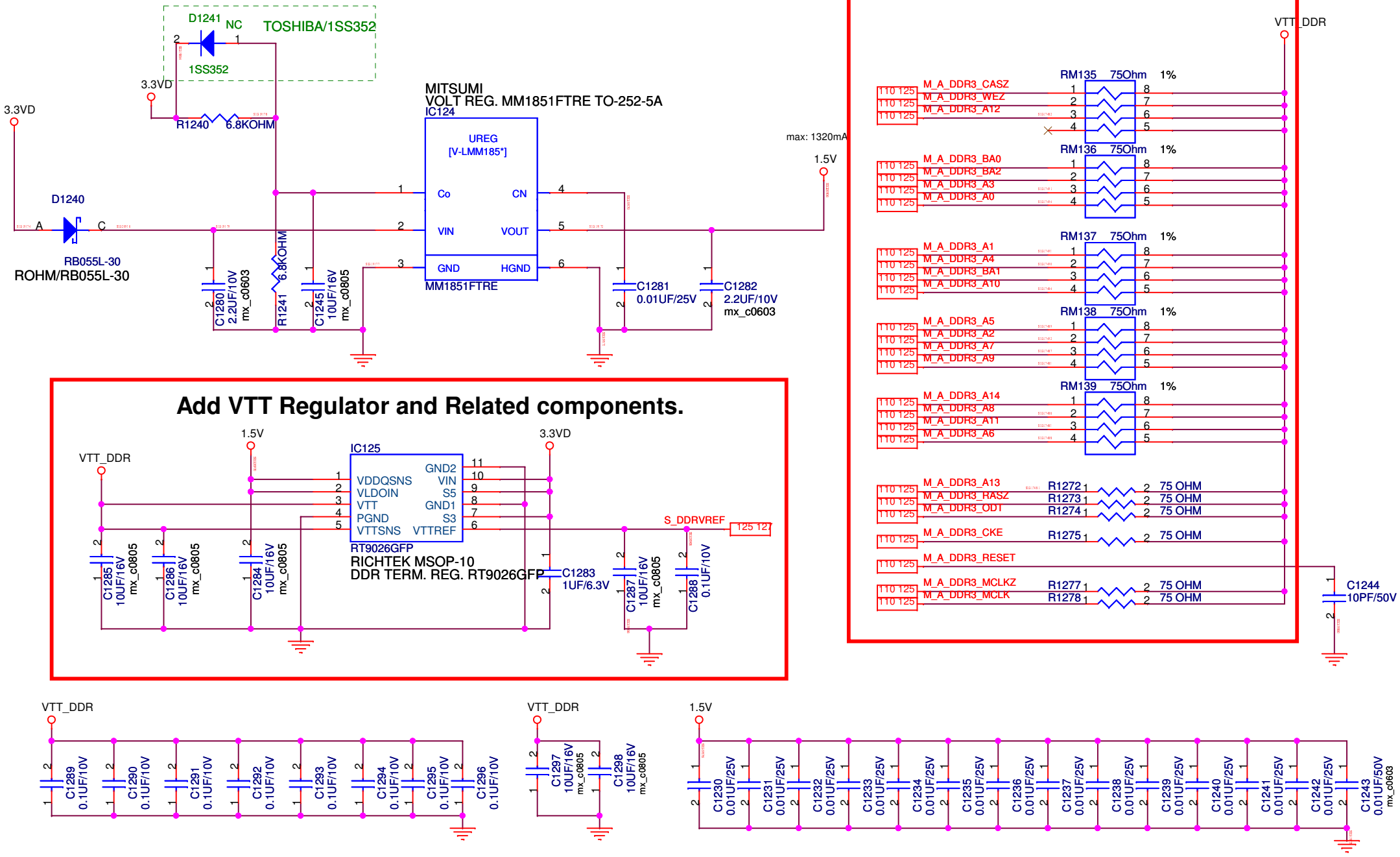

Unihan	Title : 129. DDR3 SDRAM POWE		
MAIN BOARD	Engineer: CVP DM HW		
Size A4	Project Name EU Lv.2		Rev 1.00
Date: Tuesday, January 29, 2013	Sheet 129 of 76		

132. SPI FLASH

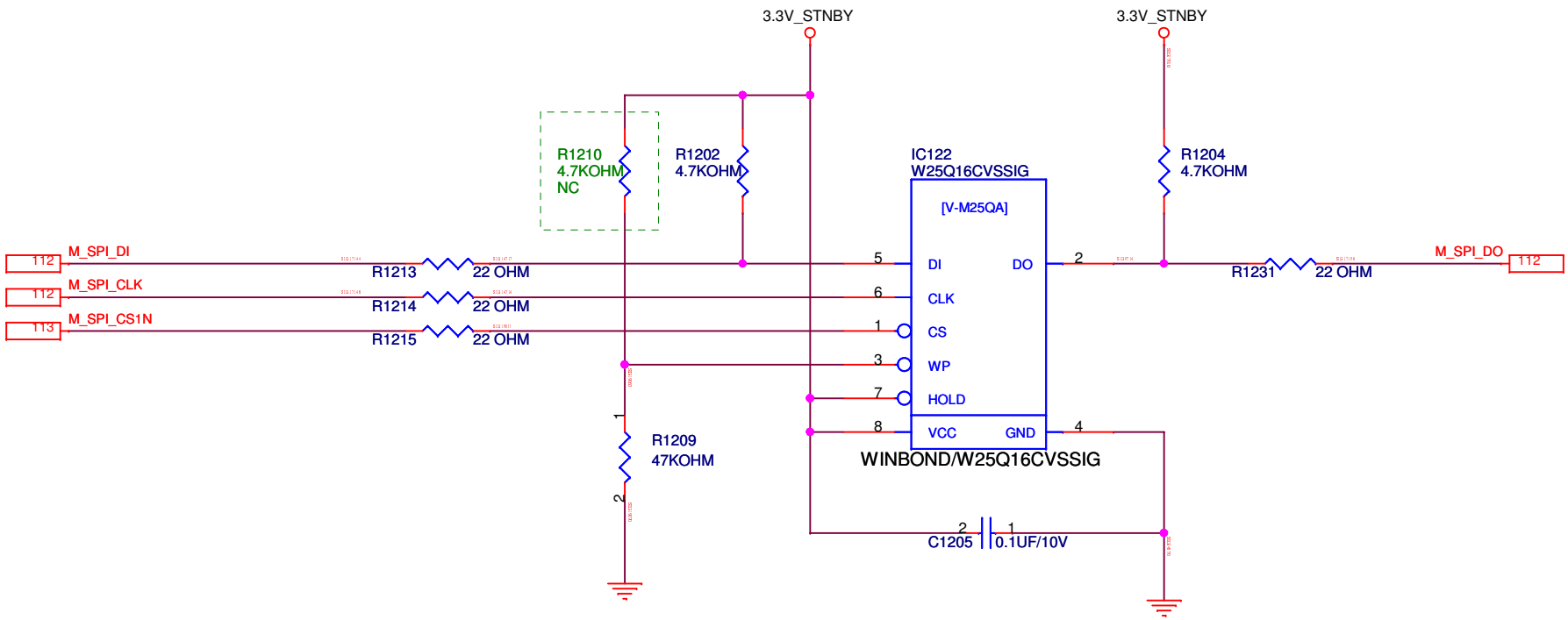

Unihan	Title : 132. SPI FLASH	
MAIN BOARD	Engineer: CVP DM HW	
Size A4	Project Name EU Lv.2	Rev 1.00
Date: Tuesday, January 29, 2013	Sheet 132 of 76	

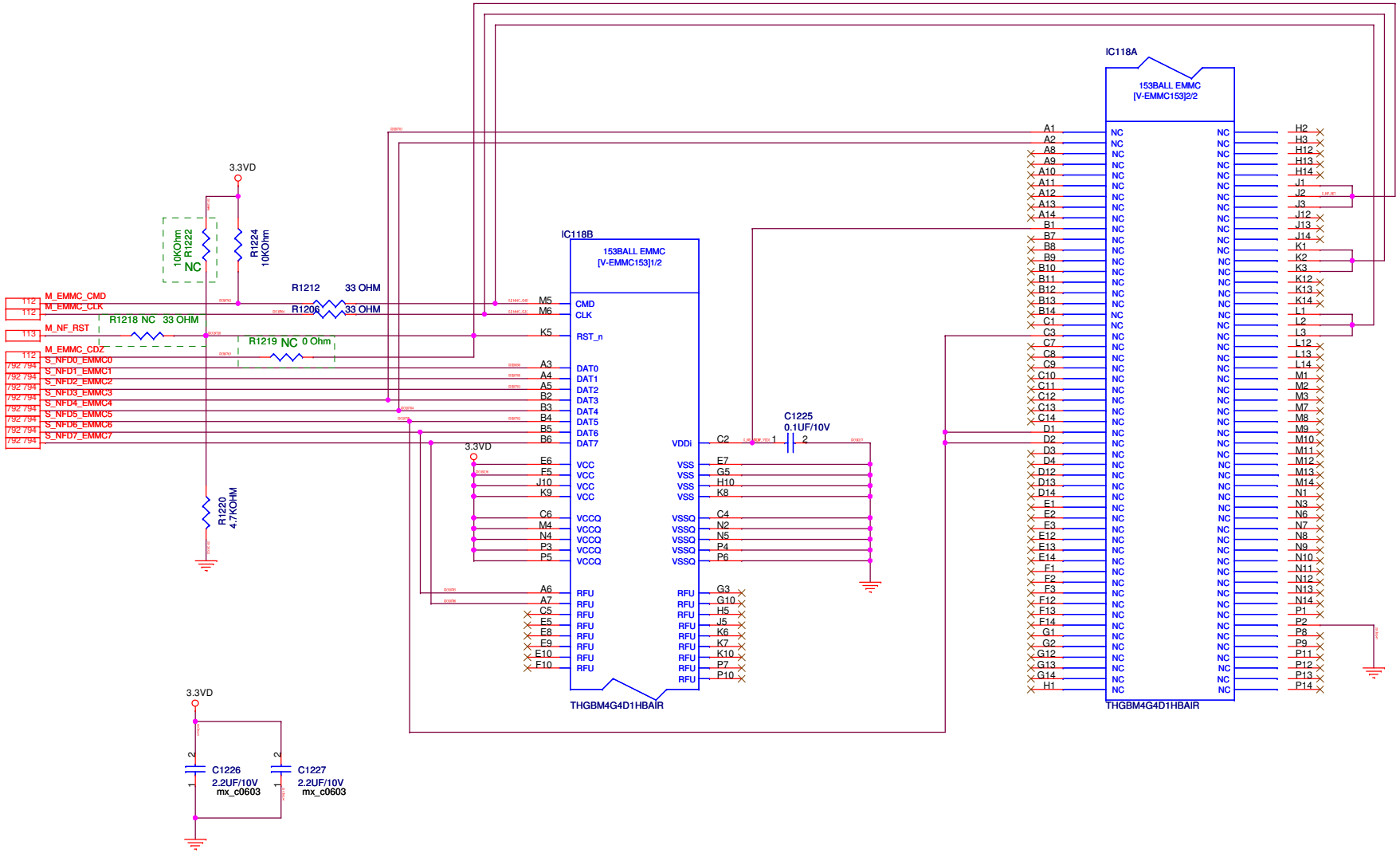

Unihan	Title : 135. EMMC	
MAIN BOARD	Engineer: CVP DM HW	
Size A3	Project Name EU Lv.2	Rev 1.00
Date: Tuesday, January 29, 2013	Sheet 135 of 76	

151. RJ45 CONNECTOR

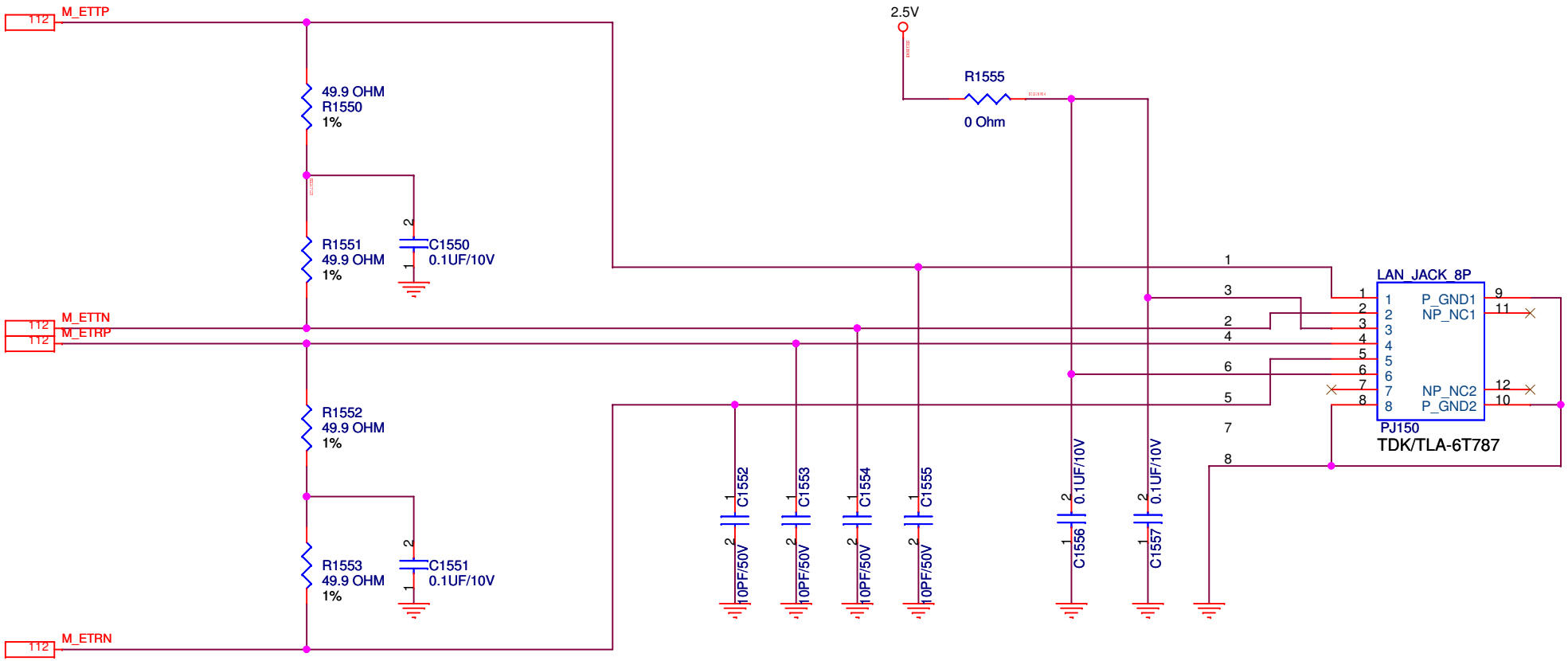

M_ETTP/M_ETTN/M_ETRP/M_ETRN Pattern Length = Max.200mm(Typ.150mm)

If it becomes a length of not less than 200mm, change to the following external Pulse Transfomer.

1)RJ45 Connector : RJ039-FD08M3B0H1W YUQIU ELECTRONICS
2)Pulse Trancefomer : ALT4532-201-T001 TDK
3)Common-mode Filter: ACM2012-201-2P TDK
4)Resistor Spec. : 75ohm
5)Capacitor Spec. : 0.001uF/2KV

Layout Positon of parts other than a RJ45 Connector is near SoC.

Unihan	Title : 151. RJ45 CONNECTOR		
MAIN BOARD	Engineer: CVP DM HW		
Size A4	Project Name EU Lv.2		Rev 1.00
Date: Tuesday, January 29, 2013	Sheet 151 of 76		

160. USB CONNECTOR

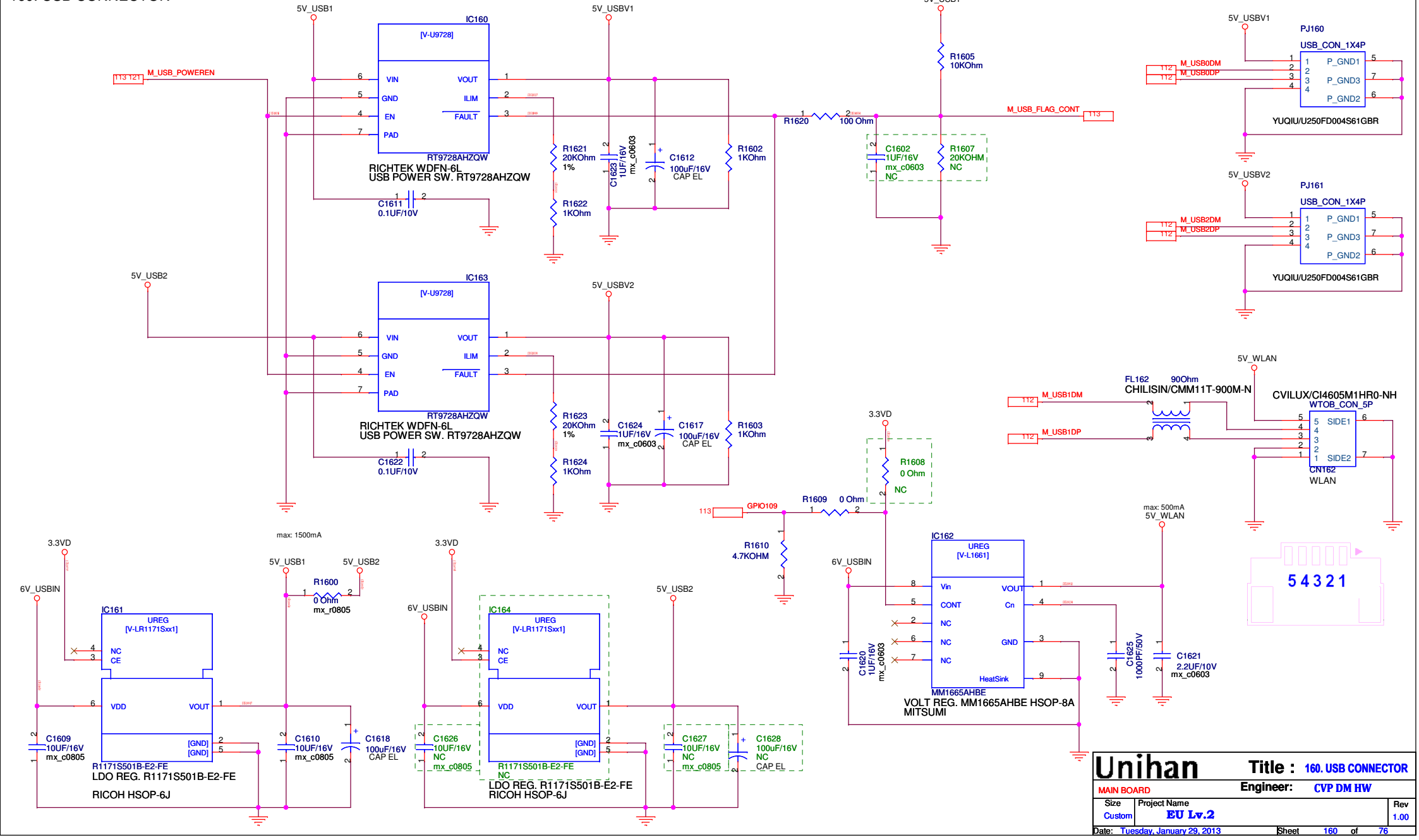

Unihan	Title : 160. USB CONNECTOR		
MAIN BOARD	Engineer: CVP DM HW		
Size: Custom	Project Name: EU Lv.2		Rev: 1.00
Date: Tuesday, January 29, 2013	Sheet 160 of 76		

310. AUDIO Line Driver

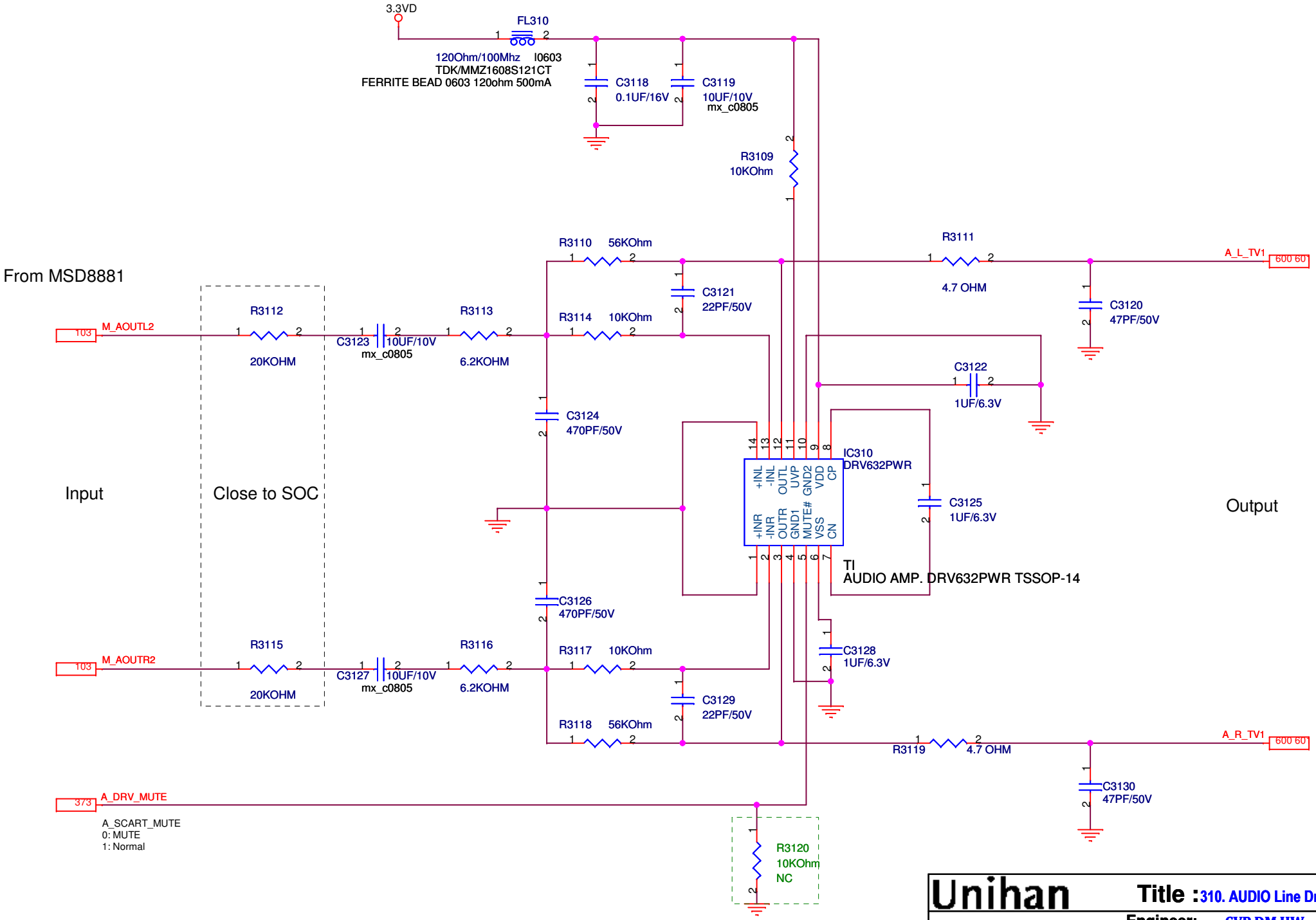

Unihan	Title : 310. AUDIO Line Driver		
MAIN BOARD	Engineer: CVP DM HW		
Size A4	Project Name EU Lv.2		Rev 1.00
Date: Tuesday, January 29, 2013	Sheet 310 of 76		

320. Headphone AMP

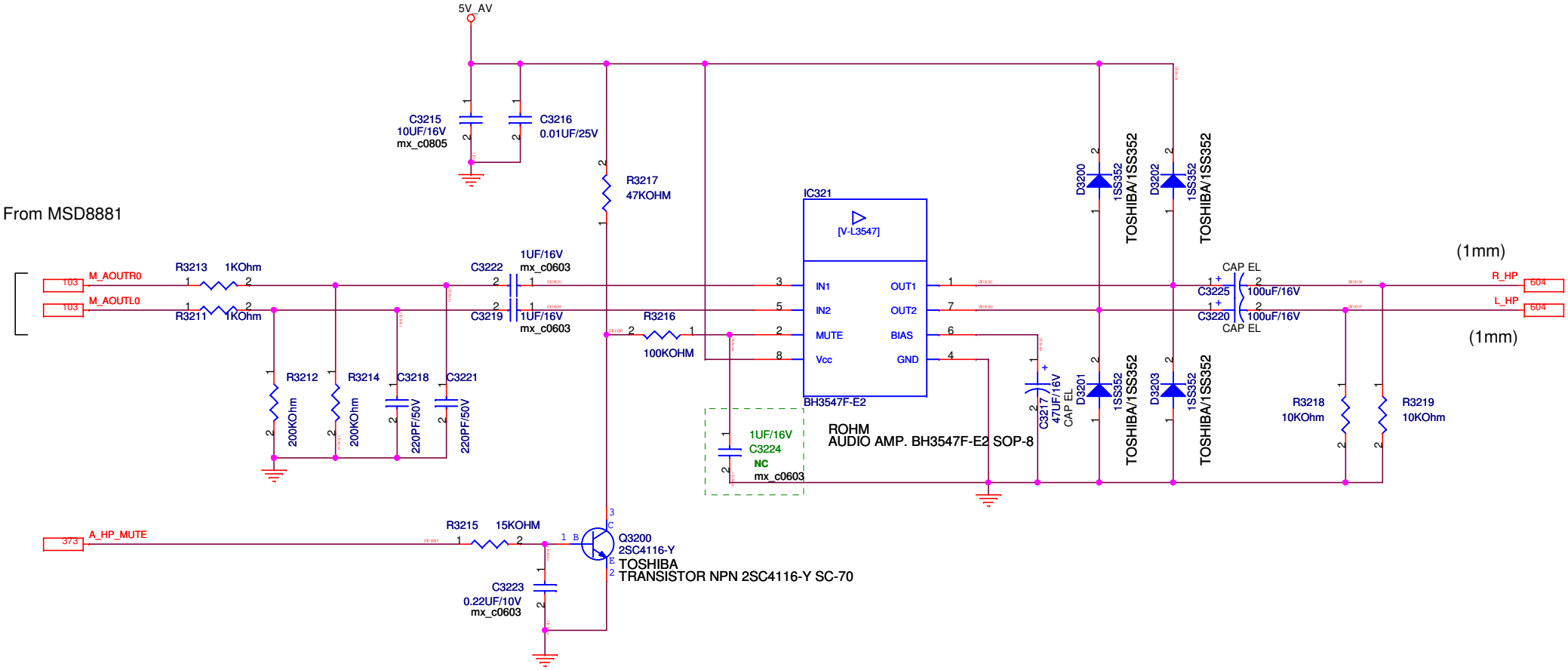

Unihan	Title : 320. Headphone AMP	
MAIN BOARD	Engineer: CVP DM HW	
Size: Custom	Project Name: EU Lv.2	Rev: 1.00
Date: Tuesday, January 29, 2013	Sheet 320 of 76	

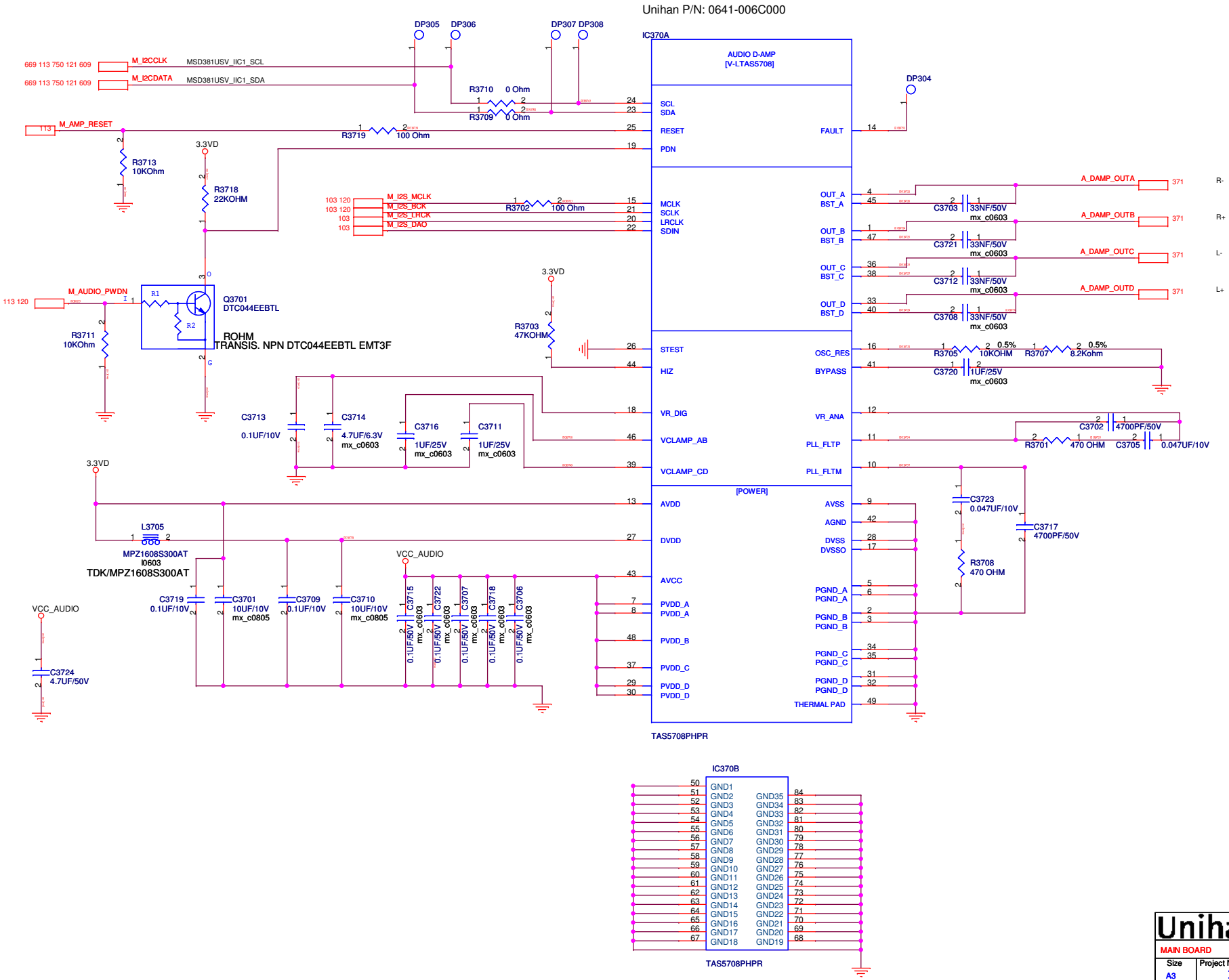

Unihan	Title : 370. AUDIO D-AMP (MAIN)	
MAIN BOARD	Engineer: CVP DM HW	
Size A3	Project Name EU Lv.2	Rev 1.00
Date: Tuesday, January 29, 2013	Sheet 370 of 76	

371. AUDIO D-AMP OUT (MAIN)

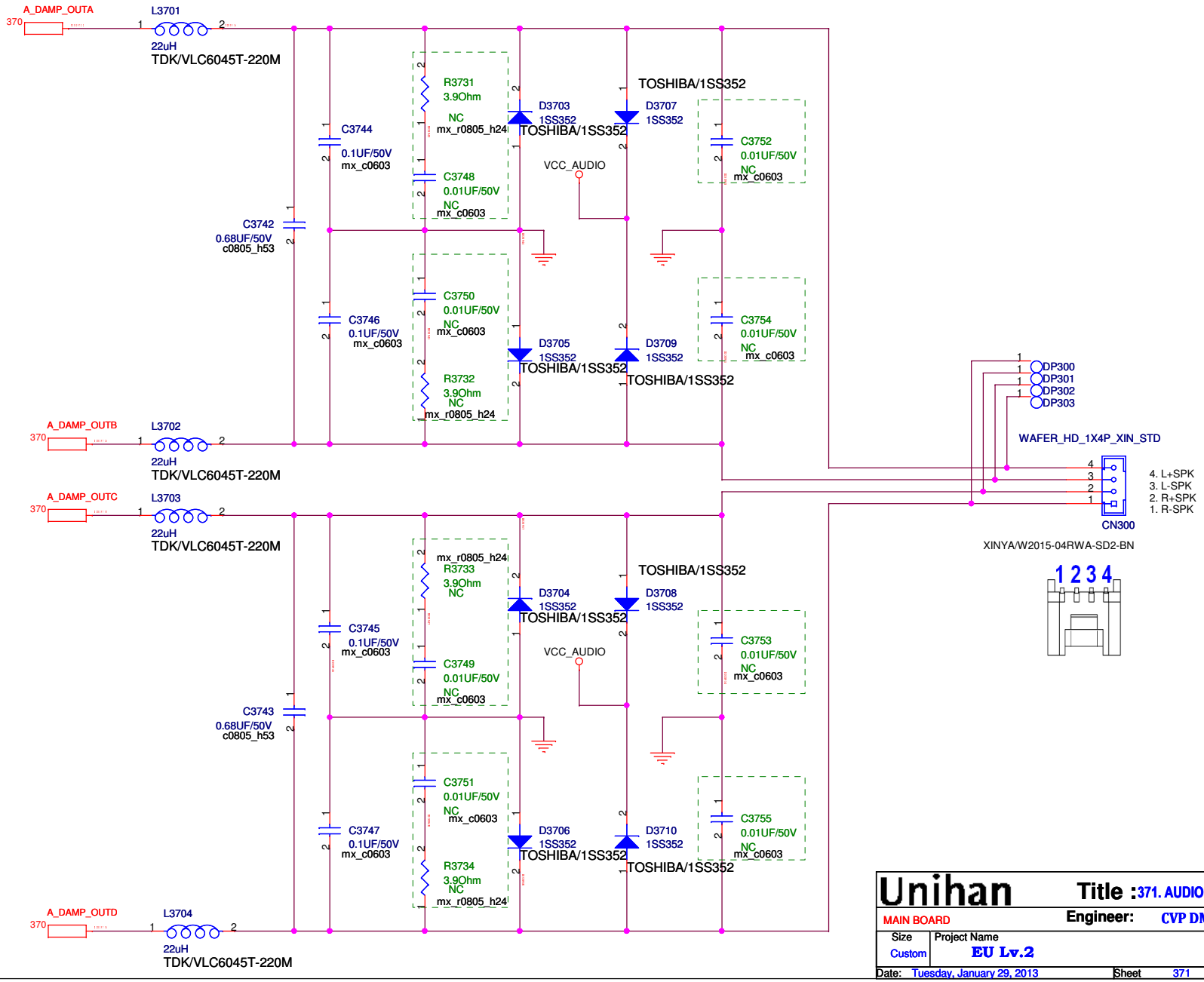

Unihan	Title : 371. AUDIO D-AMP OUT (MAIN		
MAIN BOARD	Engineer: CVP DM HW		
Size: Custom	Project Name: EU Lv.2		Rev: 1.00
Date: Tuesday, January 29, 2013	Sheet 371 of 76		

373. AUDIO MUTE

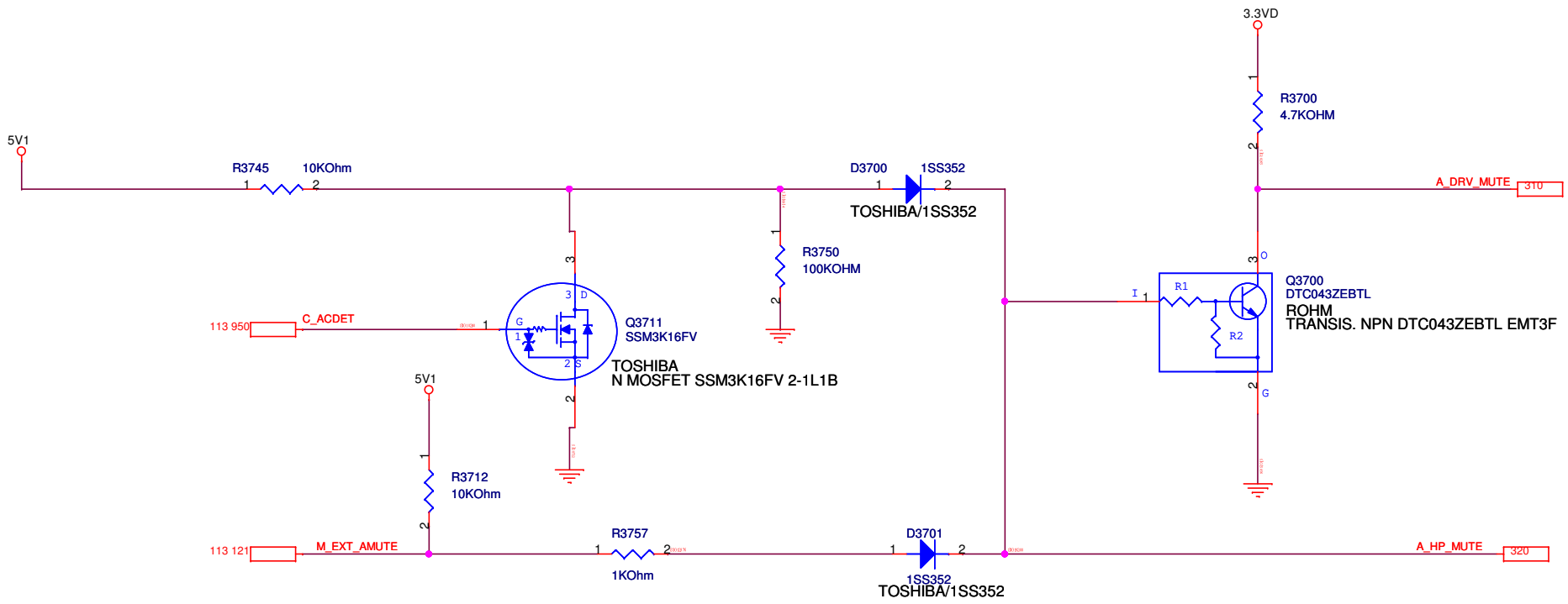

Unihan	Title : 373. AUDIO MUTE		
MAIN BOARD	Engineer: CVP DM HW		
Size: Custom	Project Name: EU Lv.2		Rev: 1.00
Date: Tuesday, January 29, 2013	Sheet 373 of 76		

600. EURO SCART

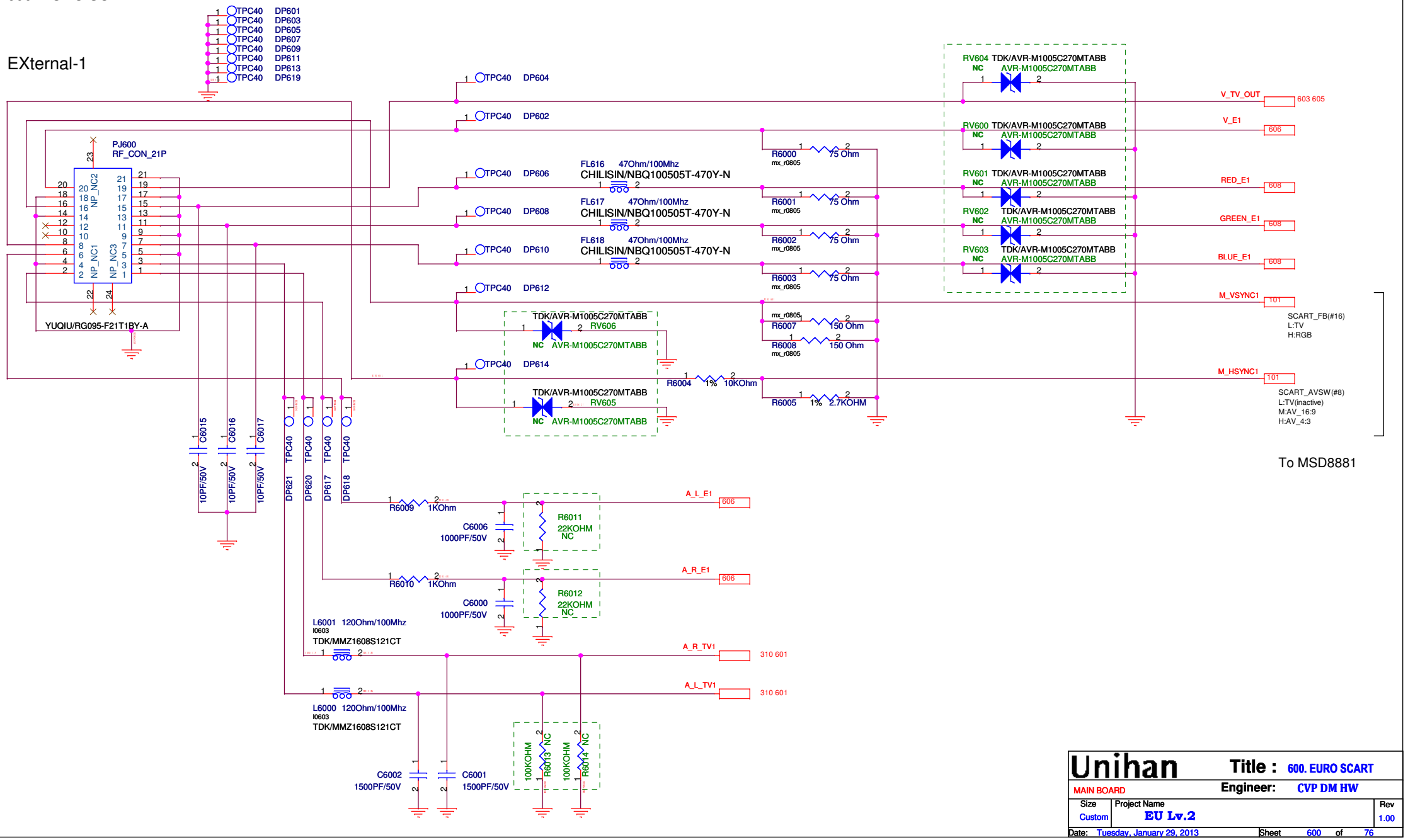

Unihan	Title : 600. EURO SCART		
MAIN BOARD	Engineer: CVP DM HW		
Size: Custom	Project Name: EU Lv.2		Rev: 1.00
Date: Tuesday, January 29, 2013	Sheet 600 of 76		

601. Audio Fix OUT

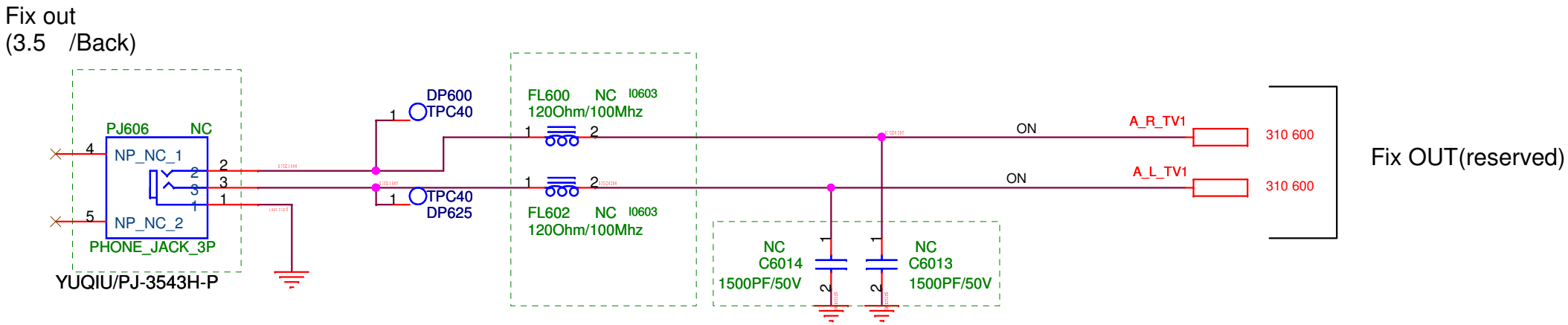

Unihan	Title : 601. Audio Fix OUT		
MAIN BOARD	Engineer: CVP DM HW		
Size Custom	Project Name EU Lv.2		Rev 1.00
Date: Tuesday, January 29, 2013	Sheet 601 of 76		

602. DSUB15P PC IN

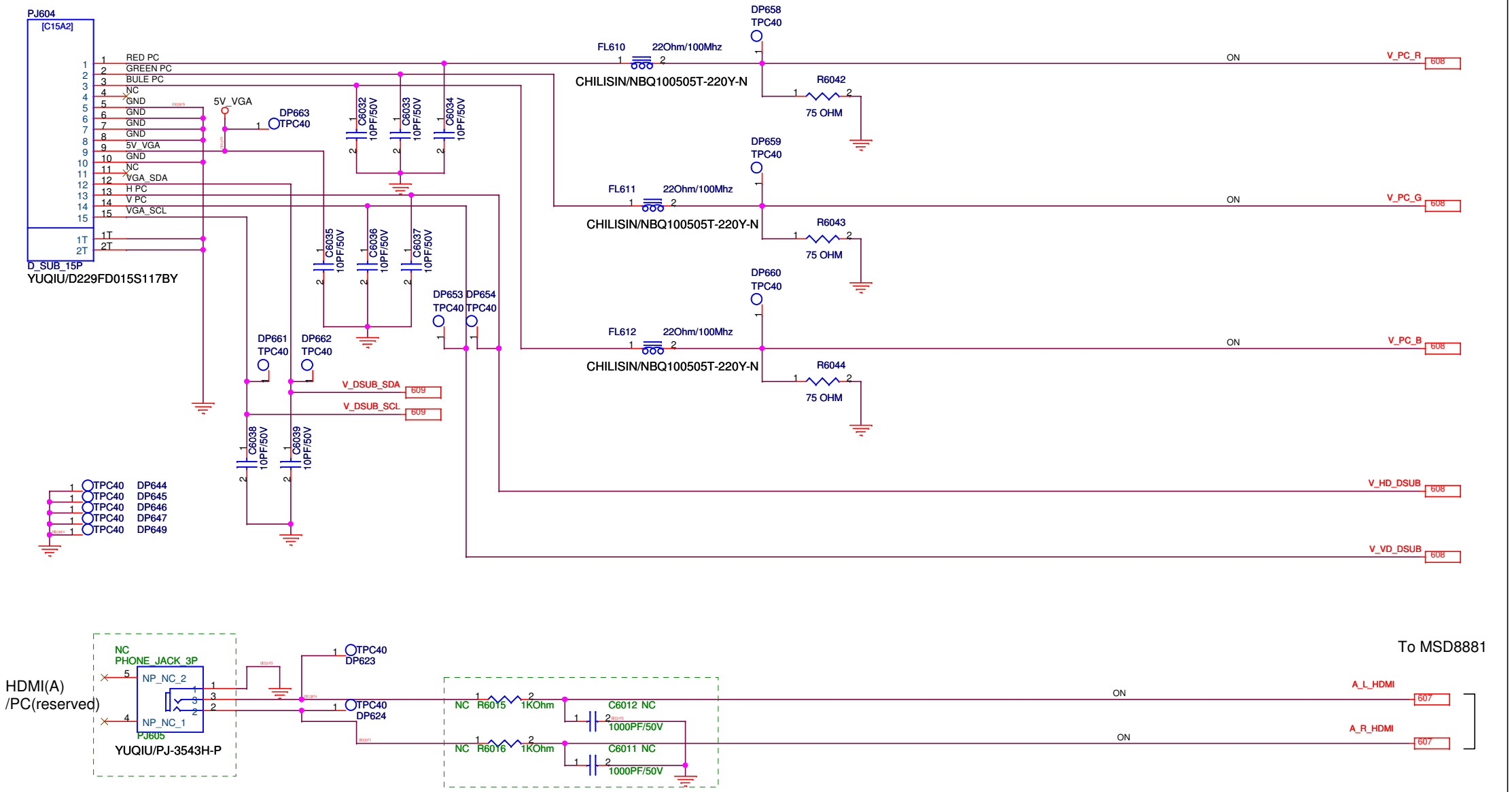

Unihan	Title : 602. DSUB15P PC IN		
MAIN BOARD	Engineer: CVP DM HW		
Size: Custom	Project Name: EU Lv.2		Rev: 1.00
Date: Tuesday, January 29, 2013	Sheet 602 of 76		

603. EURO COMPONENT IN

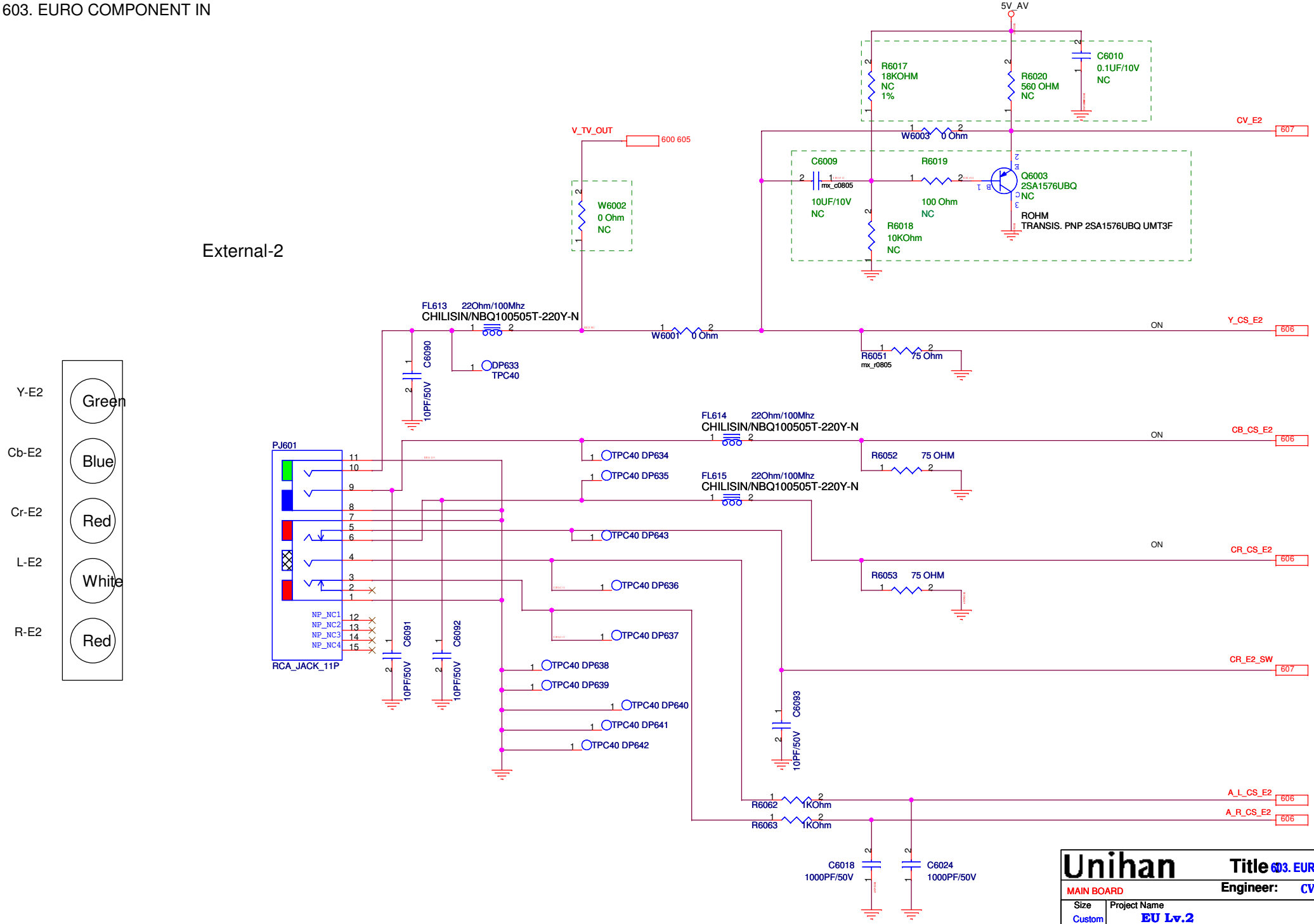

Unihan	Title 603. EURO COMPONENT IN	
MAIN BOARD	Engineer: CVP DM HW	
Size: Custom	Project Name: EU Lv.2	Rev: 1.00
Date: Tuesday, January 29, 2013	Sheet 603 of 76	

604. OPTICAL HP/Fix Output

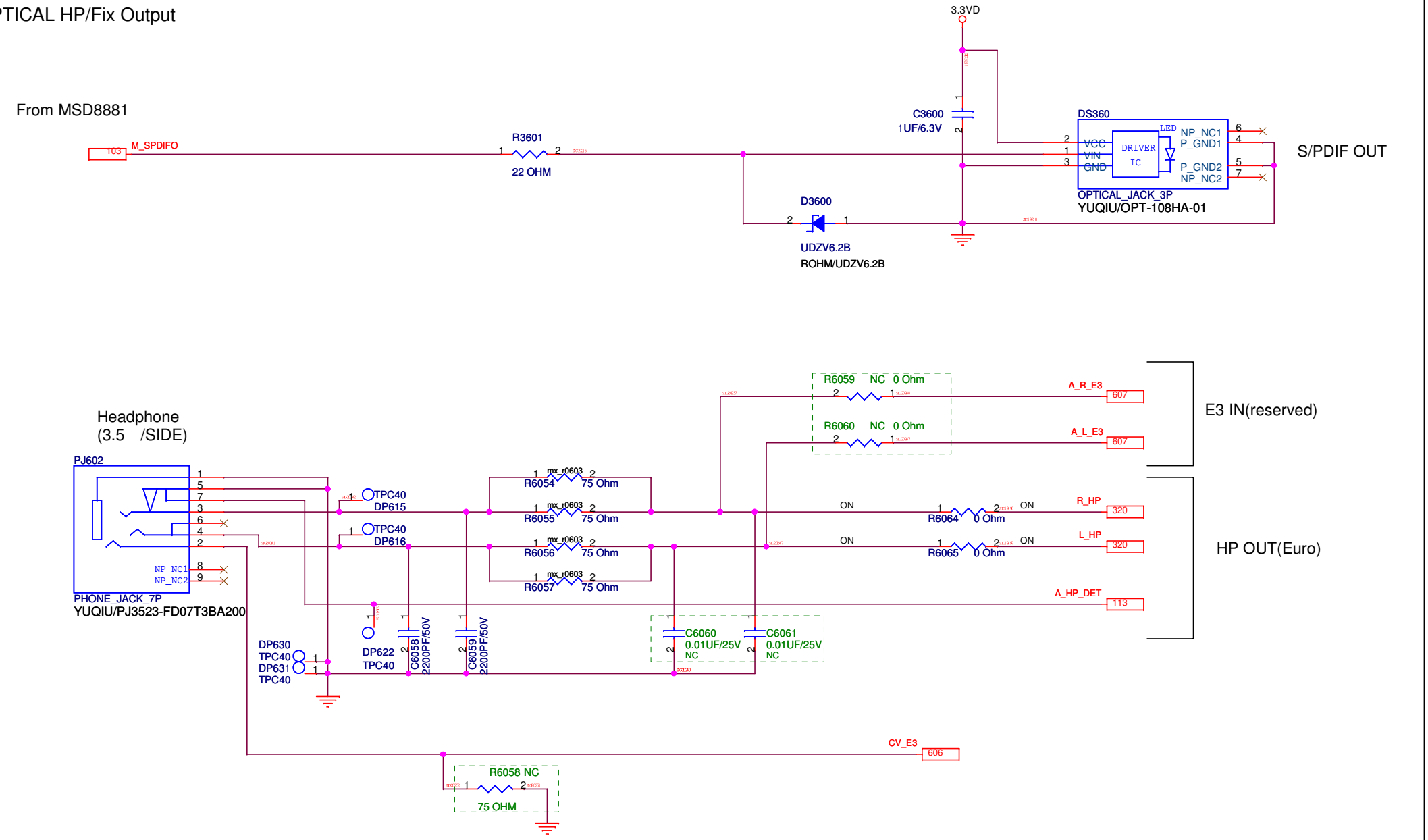

Unihan	Title : 604. OPTICAL HP/Fix Output		
MAIN BOARD	Engineer: CVP DM HW		
Size: Custom	Project Name: EU Lv.2		Rev: 1.00
Date: Tuesday, January 29, 2013	Sheet 604 of 76		

605. EURO SCART OUT

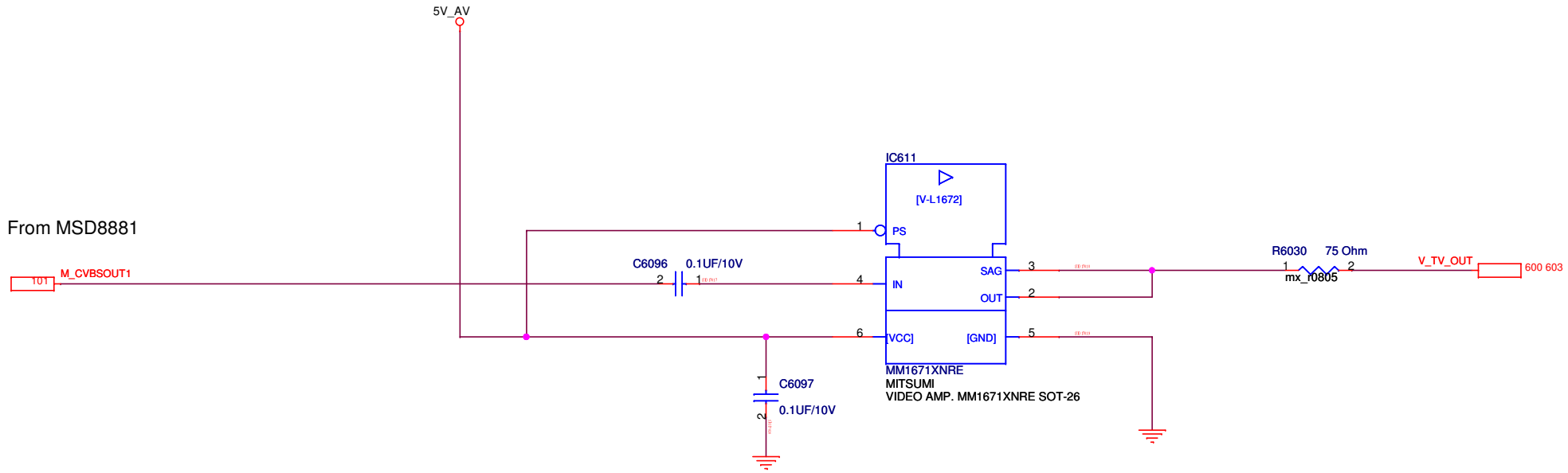

Unihan	Title : 605. EURO SCART OUT		
MAIN BOARD	Engineer: CVP DM HW		
Size: Custom	Project Name: EU Lv.2		Rev: 1.00
Date: Tuesday, January 29, 2013	Sheet 605 of 76		

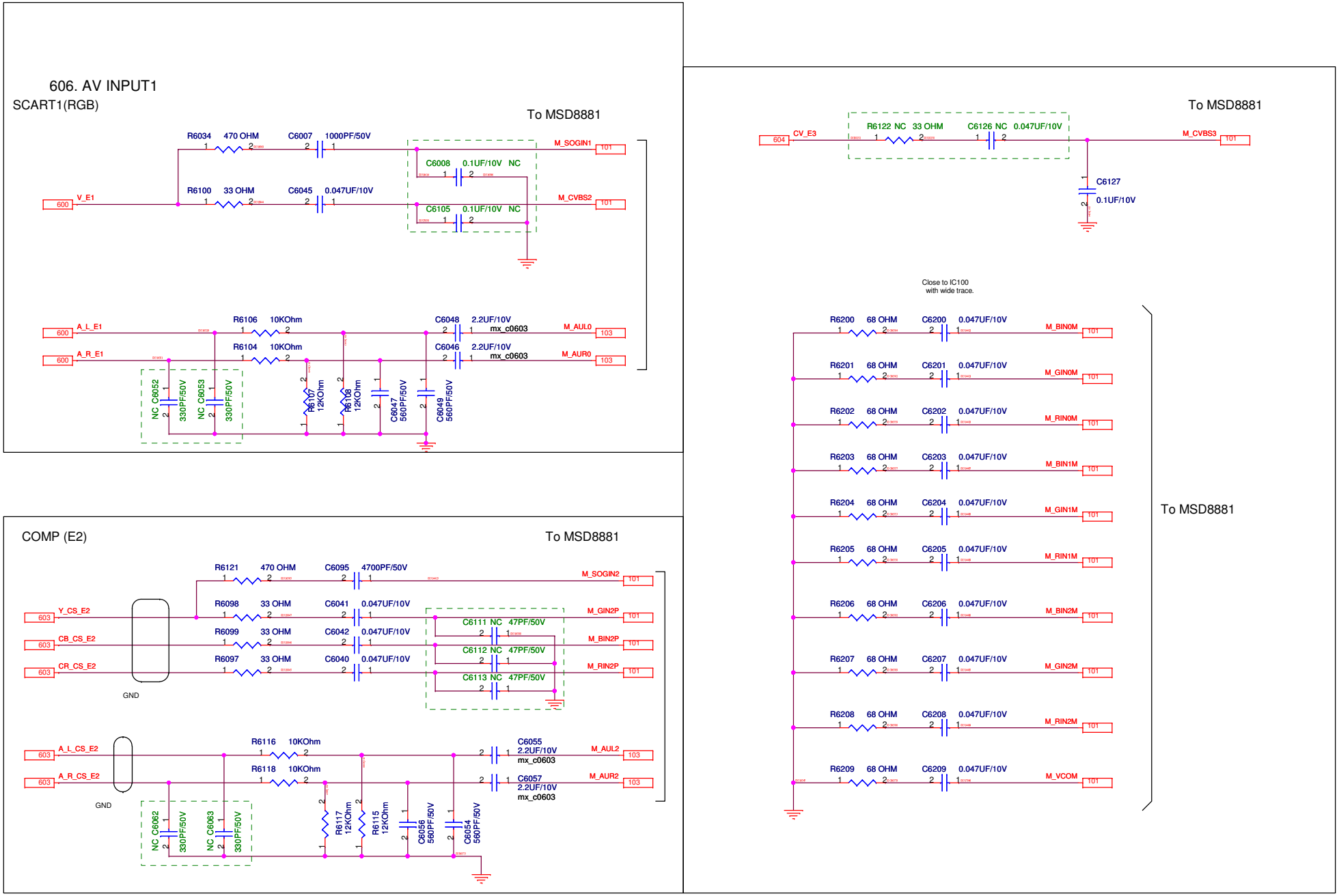

Unihan	Title : 606. AV INPUT1	
MAIN BOARD	Engineer: CVP DM HW	
Size A3	Project Name EU Lv.2	Rev 1.00
Date: Tuesday, January 29, 2013	Sheet 606 of 76	

607. AV INPUT2

EXT-2(CVBS)

To MSD8881

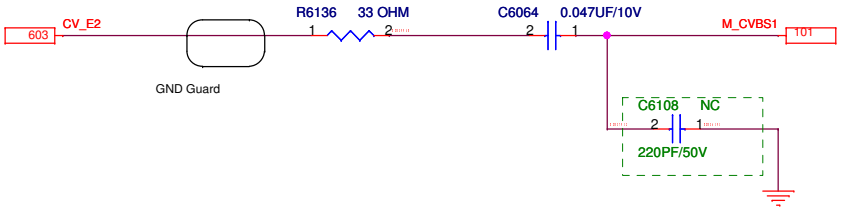

ANALOG TUNER

To MSD8881

PC/HDMI Audio In(reserved)

To MSD8881

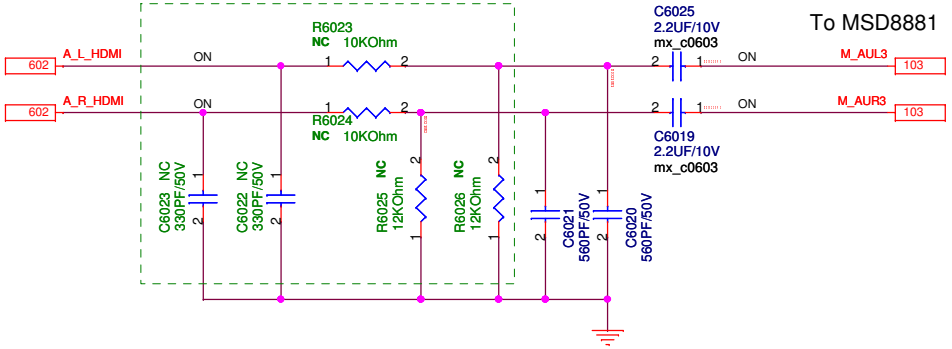

E2-SW

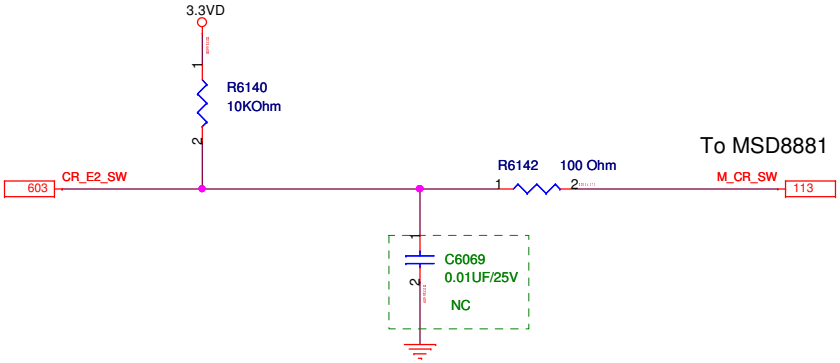

To MSD8881

L/R In(reserved)

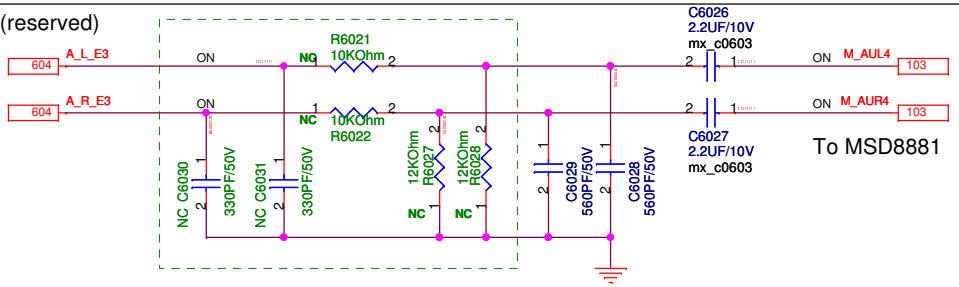

To MSD8881

Unihan	Title : 607. AV INPUT2	
MAIN BOARD	Engineer: CVP DM HW	
Size: Custom	Project Name: EU Lv.2	Rev: 1.00
Date: Tuesday, January 29, 2013	Sheet 607 of 76	

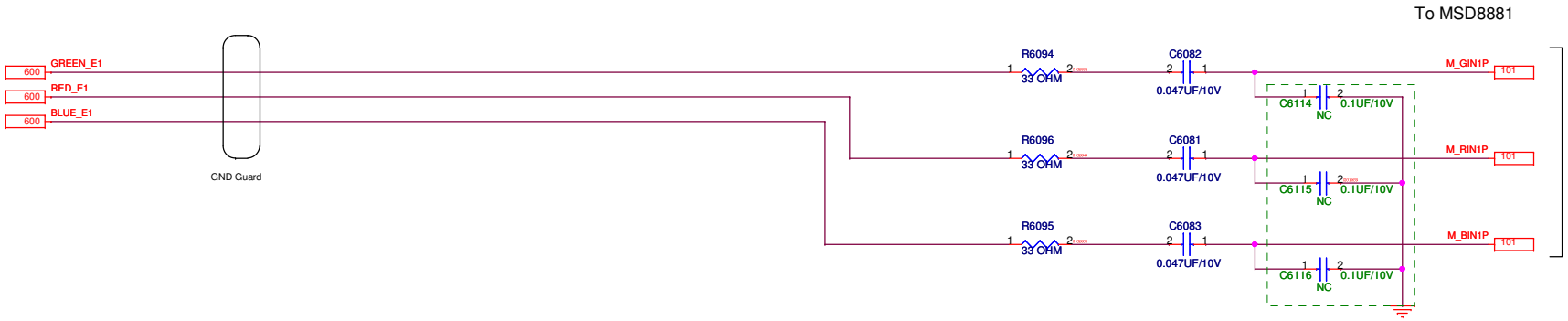

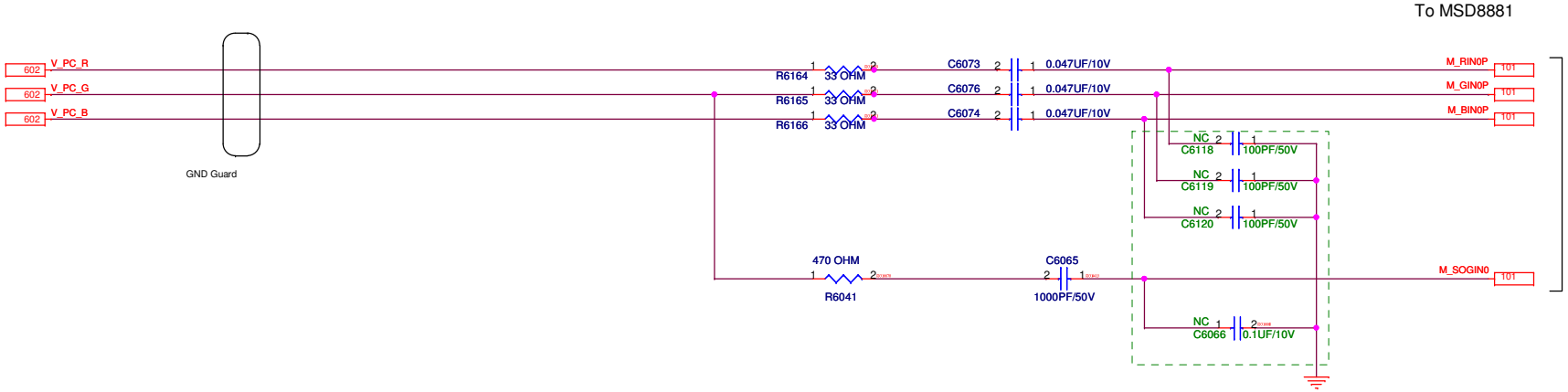

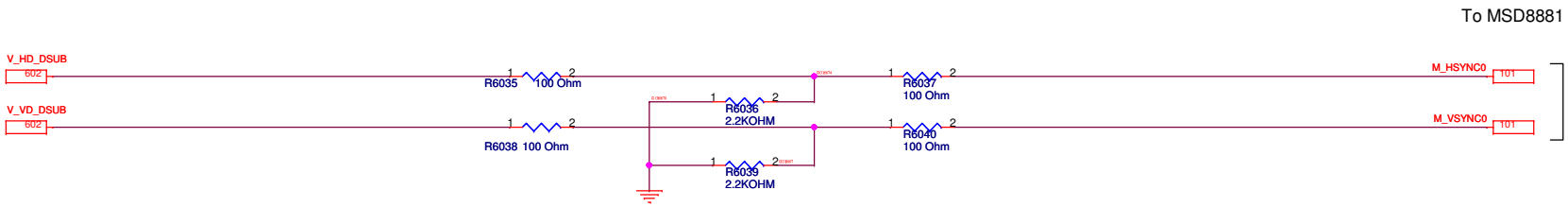

Unihan	Title : 608. AV INPUT3		
MAIN BOARD	Engineer: CVP DM HW		
Size A3	Project Name EU Lv.2		Rev 1.00
Date: Tuesday, January 29, 2013	Sheet 608 of 76		

609. DSUB PC EDID

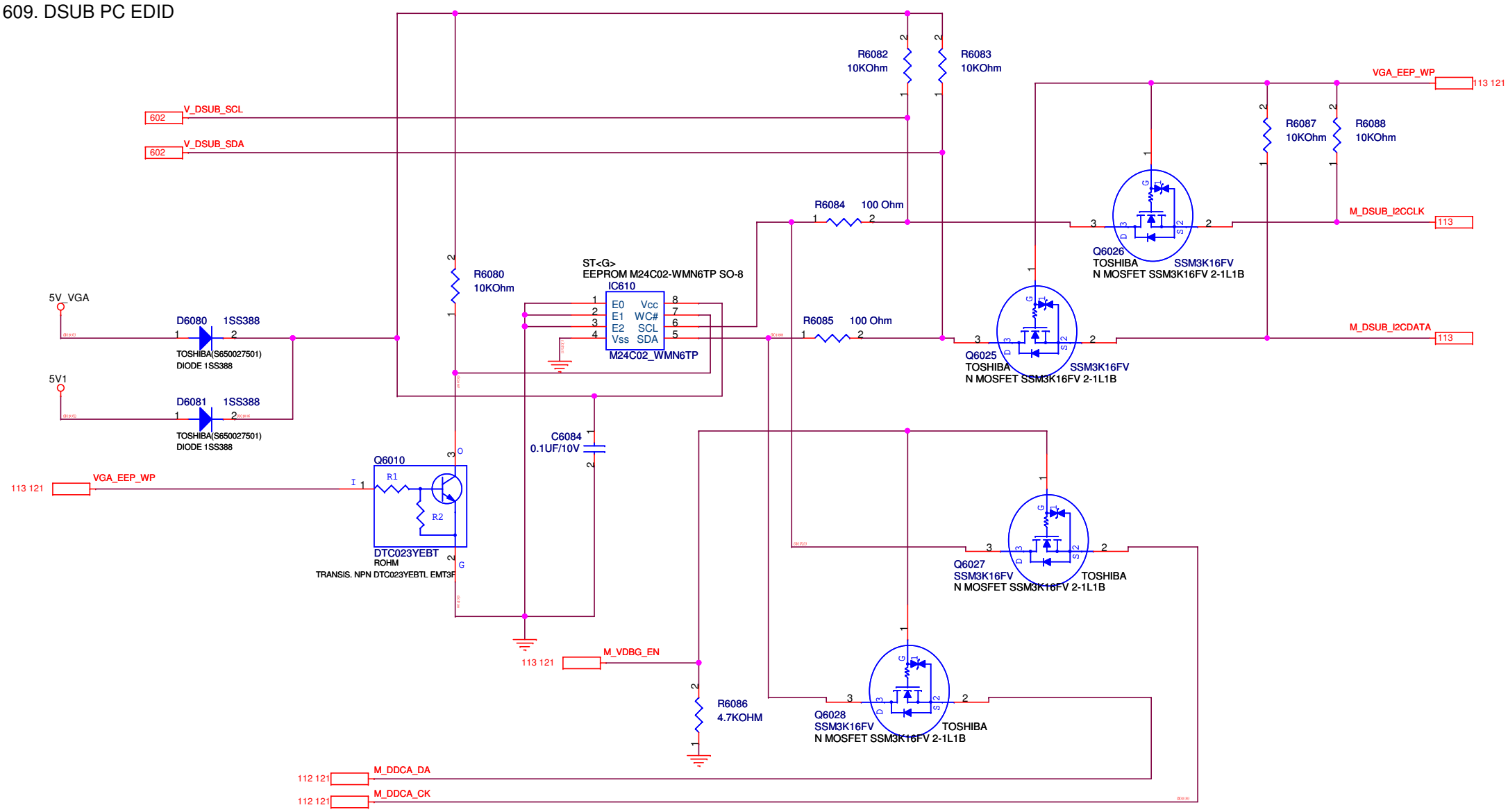

Unihan	Title : 609. DSUB PC EDID		
MAIN BOARD	Engineer: CVP DM HW		
Size: Custom	Project Name: EU Lv.2		Rev: 1.00
Date: Tuesday, January 29, 2013	Sheet 609 of 76		

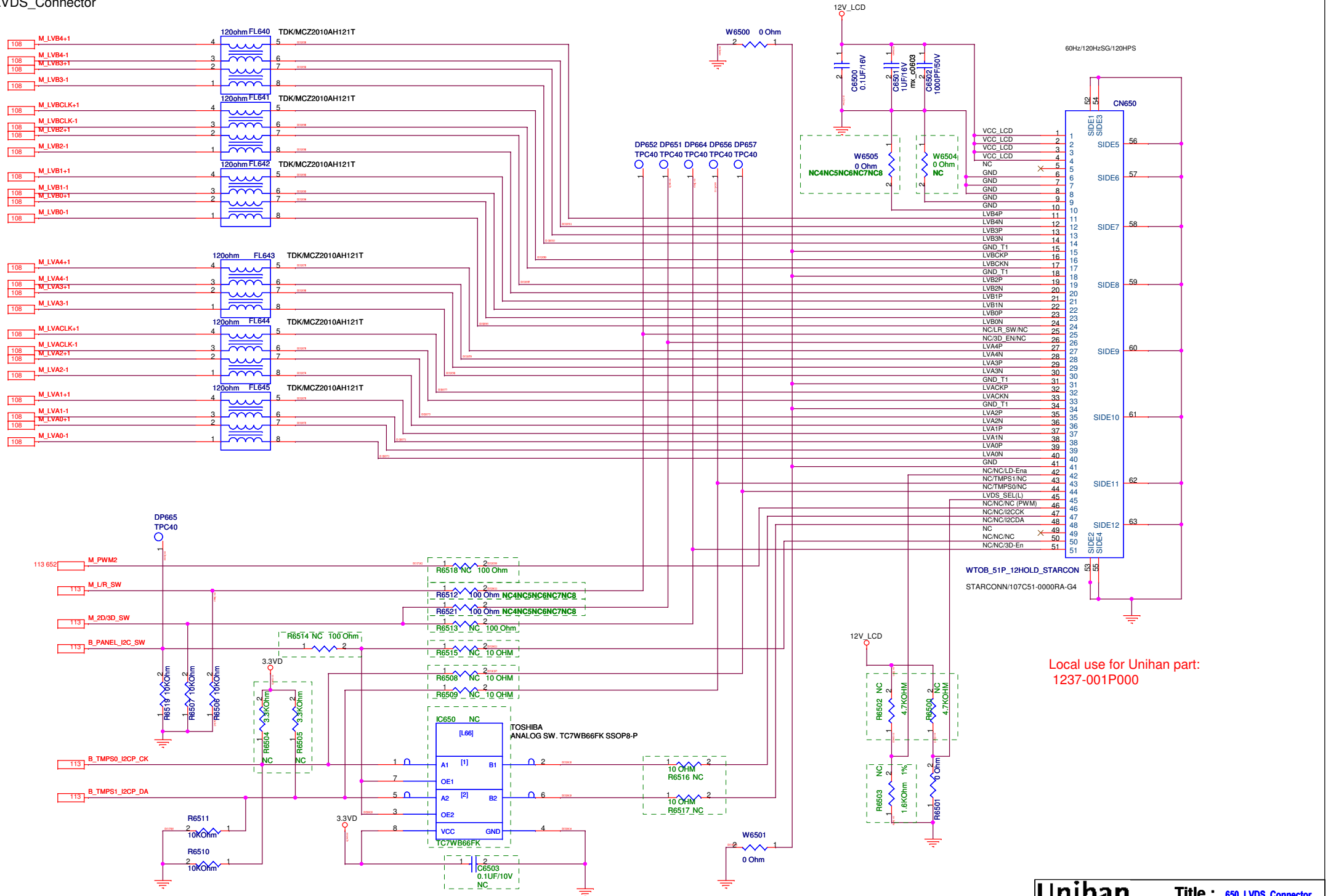

Unihan	Title : 650. LVDS_Connector	
MAIN BOARD	Engineer: CVP DM HW	
Size A3	Project Name EU Lv.2	Rev 1.00
Date: Tuesday, January 29, 2013	Sheet 650 of 76	

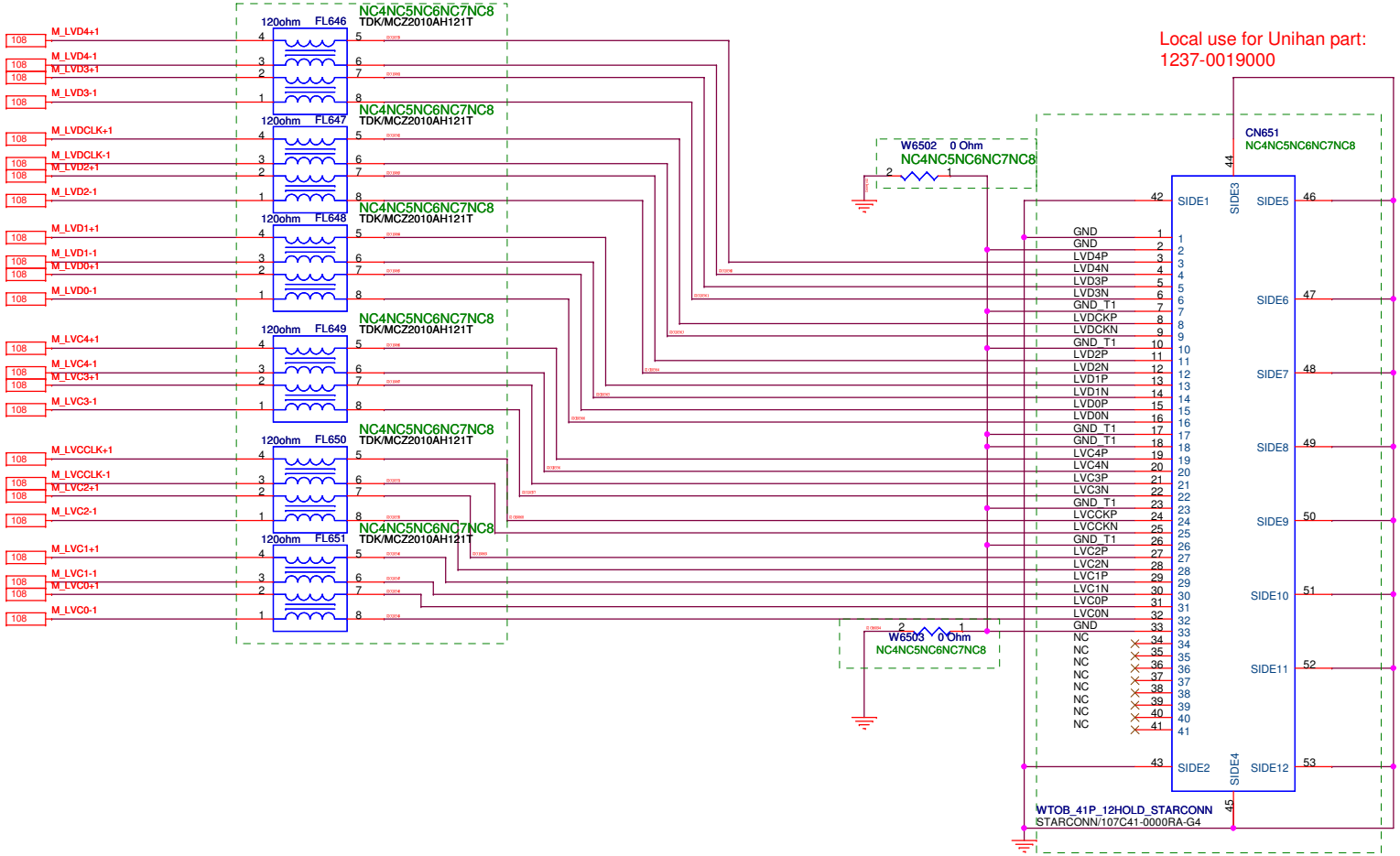

Unihan	Title : 651. LVDS_Connector2	
MAIN BOARD	Engineer: CVP DM HW	
Size A3	Project Name EU Lv.2	Rev 1.00
Date: Tuesday, January 29, 2013	Sheet 651 of 76	

652. BL_Control

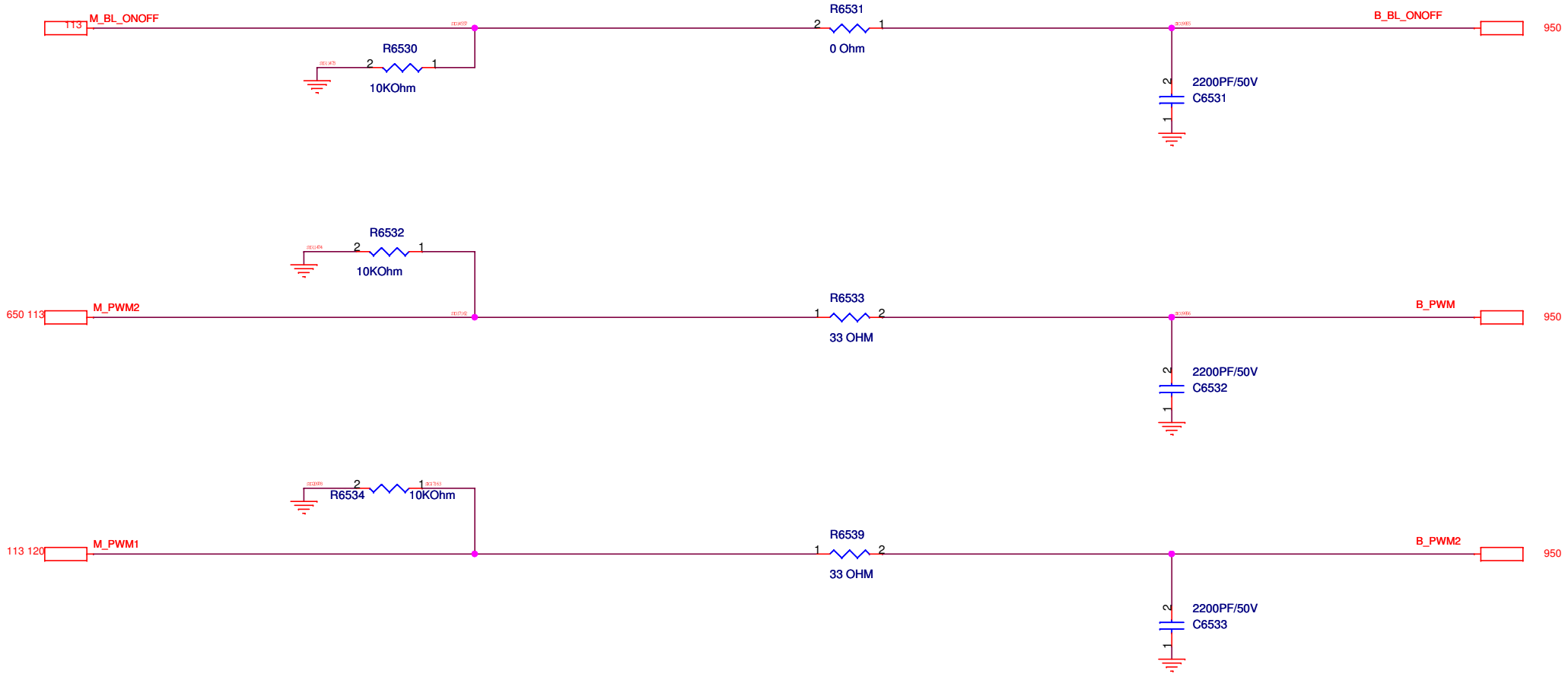

Unihan	Title : 652. BL_Control		
MAIN BOARD	Engineer: CVP DM HW		
Size: Custom	Project Name: EU Lv.2		Rev: 1.00
Date: Tuesday, January 29, 2013	Sheet 652 of 76		

653. T-CON POWER

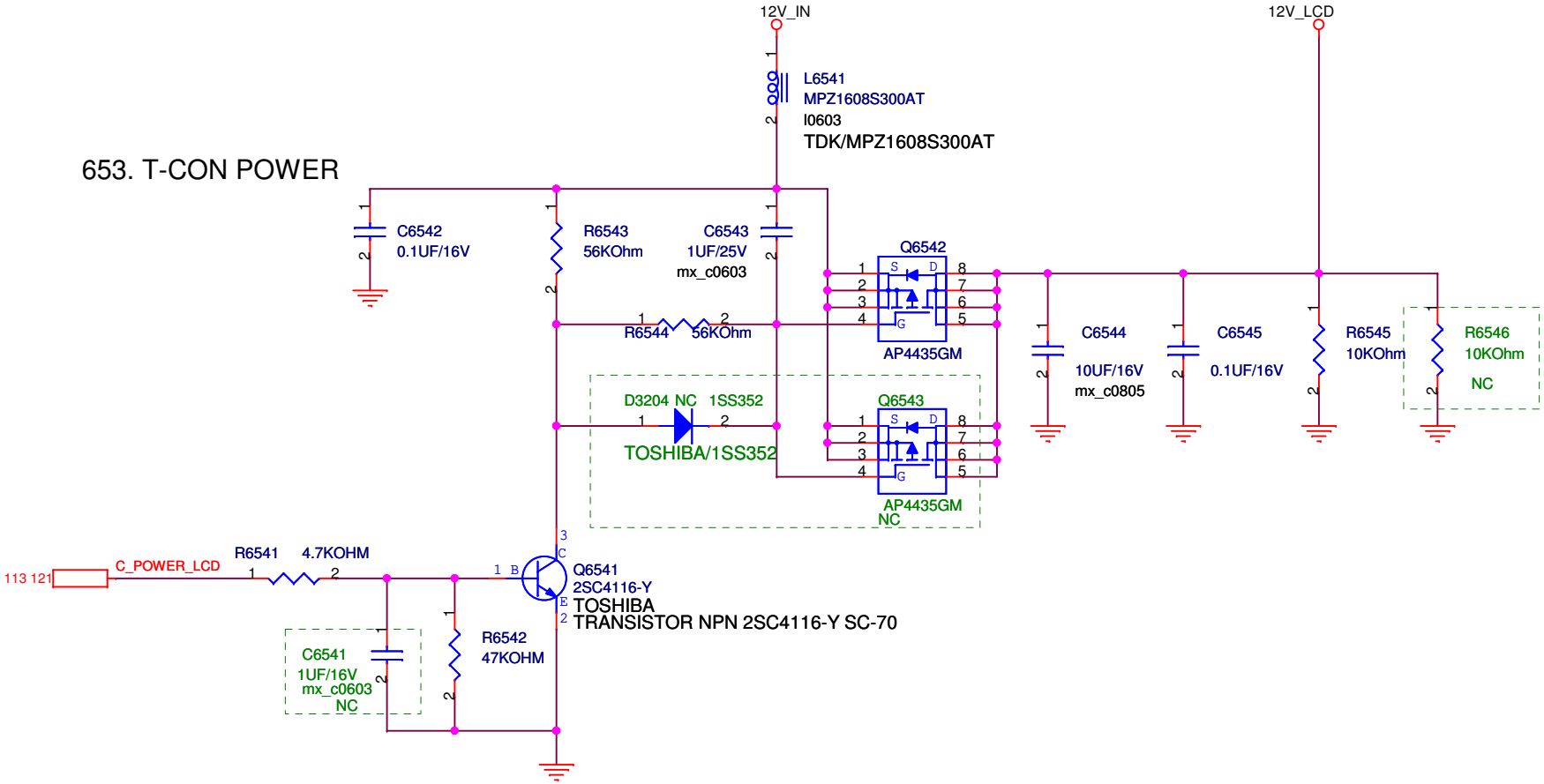

Unihan	Title : 653. T-CON POWER	
MAIN BOARD	Engineer: CVP DM HW	
Size A4	Project Name EU Lv.2	Rev 1.00
Date: Tuesday, January 29, 2013	Sheet 653 of 76	

658. 3D GLASSES I/F

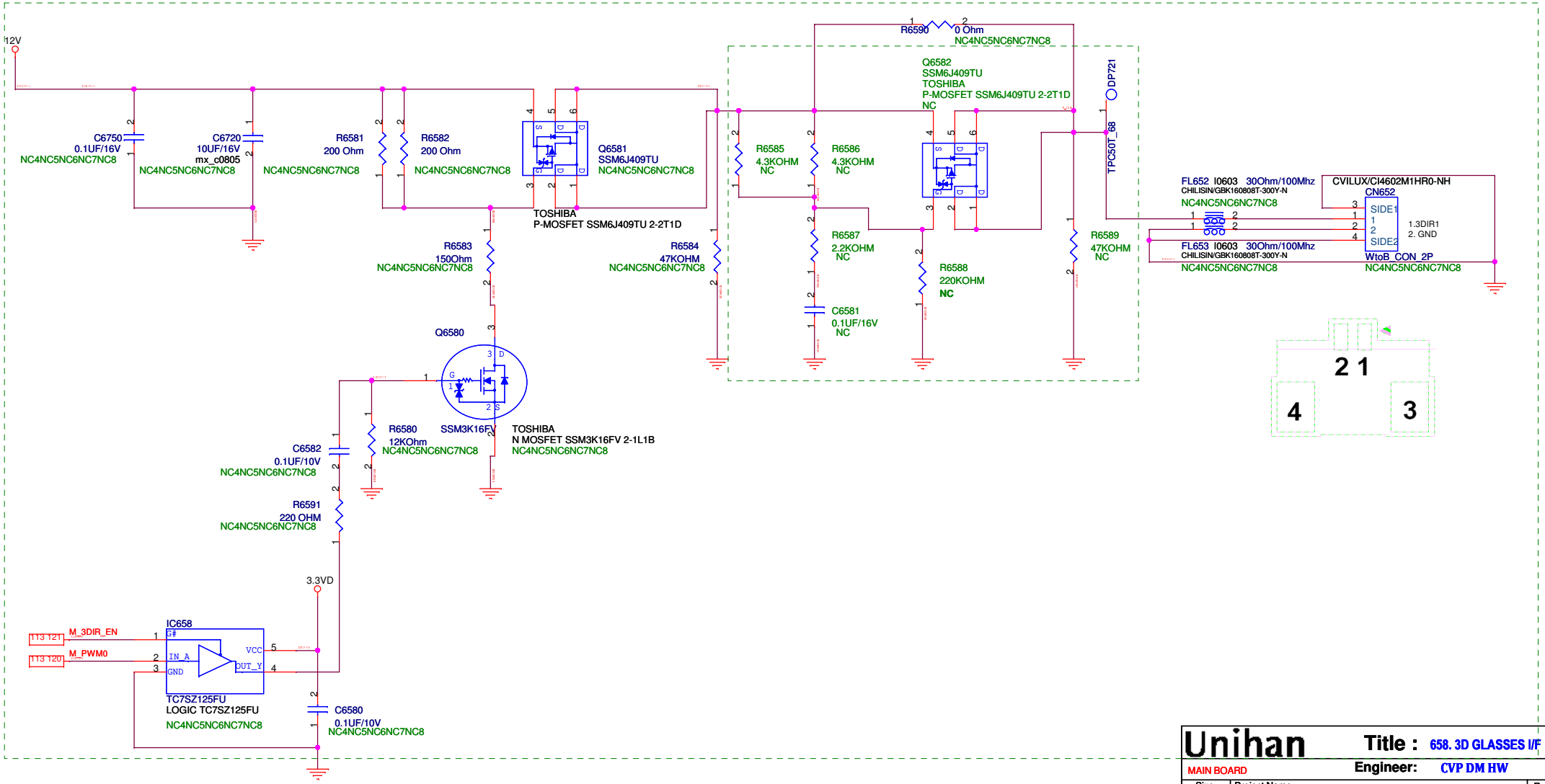

Unihan	Title : 658. 3D GLASSES I/F	
MAIN BOARD	Engineer: CVP DM HW	
Size: Custom	Project Name: EU Lv.2	Rev: 1.00
Date: Tuesday, January 29, 2013	Sheet 658 of 76	

660. HDMI Connector

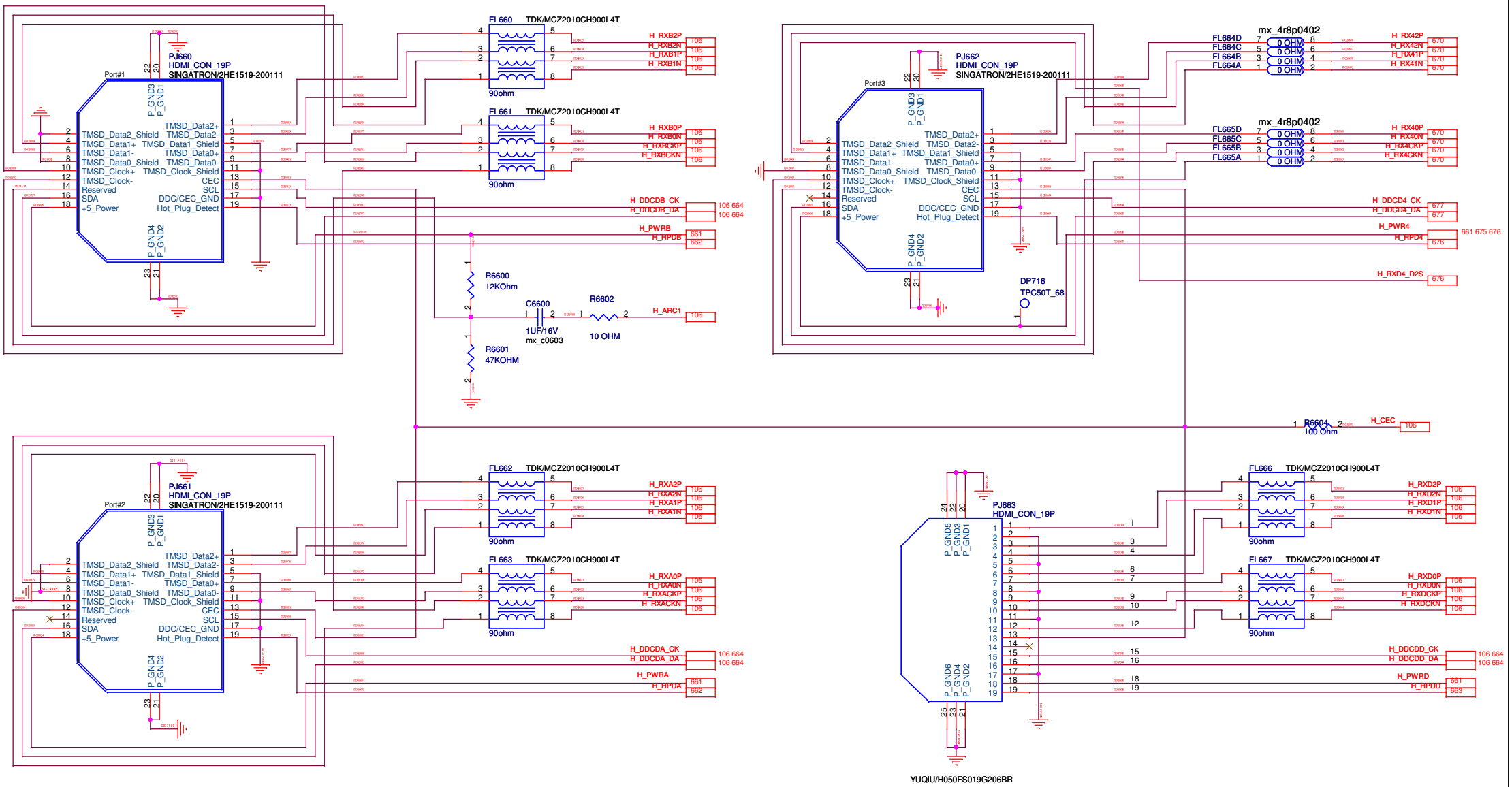

Unihan	Title : 660. HDMI Connector	
MAIN BOARD	Engineer: CVP DM HW	
Size A3	Project Name EU Lv.2	Rev 1.00
Date: Tuesday, January 29, 2013	Sheet 660 of 76	

661. HDMI 5VPWR

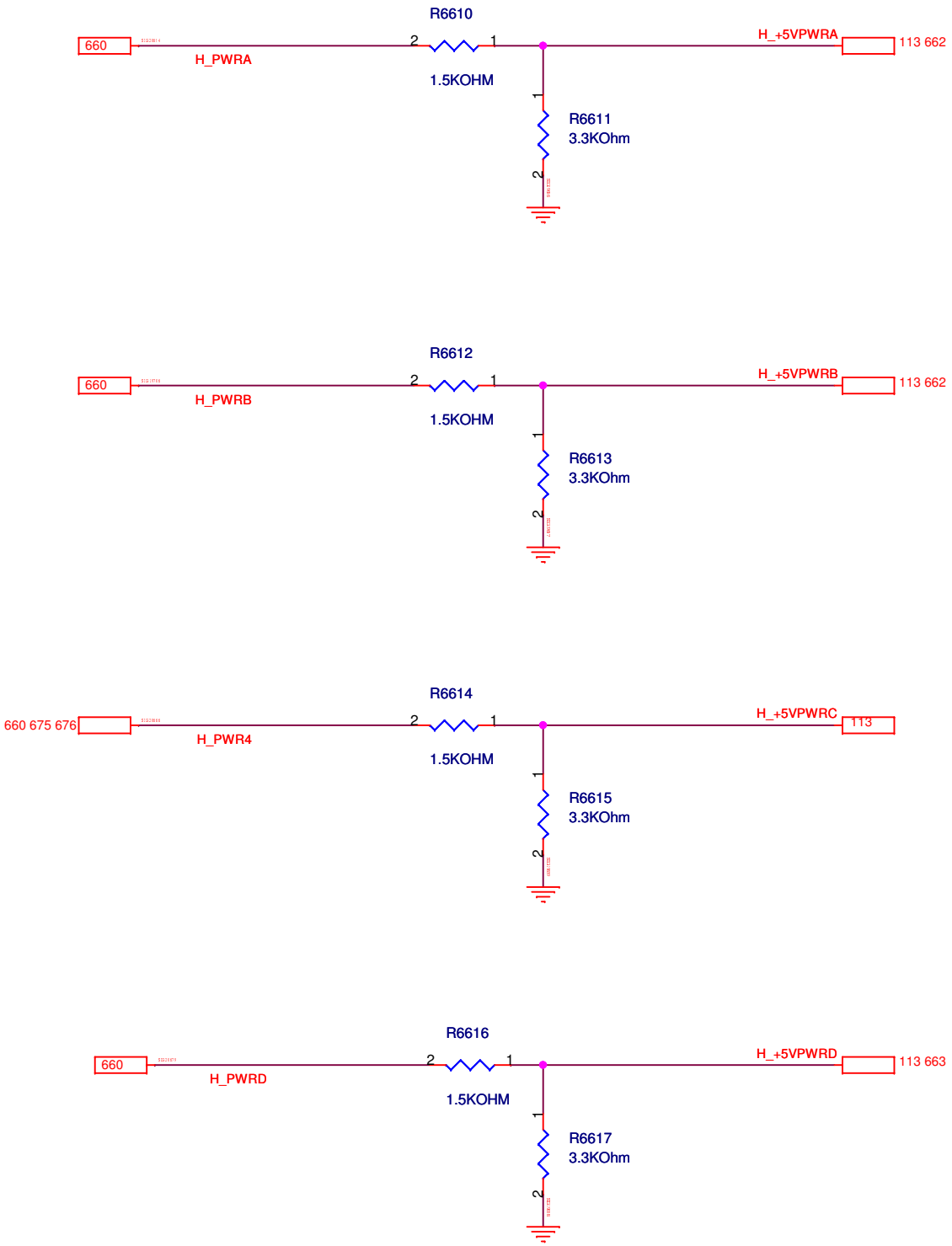

Unihan	Title : 661. HDMI 5VPWR		
MAIN BOARD	Engineer: CVP DM HW		
Size A4	Project Name EU Lv.2		Rev 1.00
Date: Tuesday, January 29, 2013	Sheet 661 of 76		

662. HDMI HPD(1)

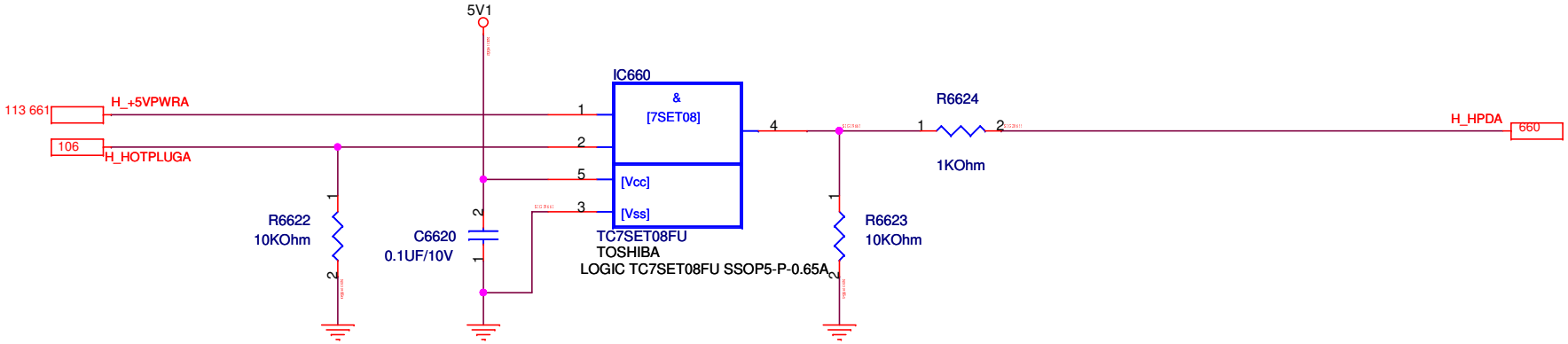

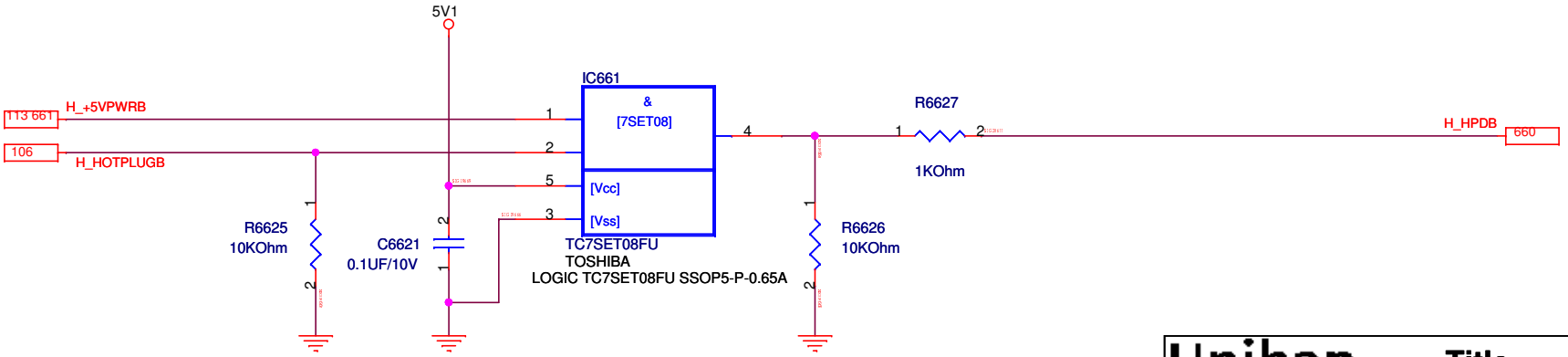

Unihan	Title : 662. HDMI HPD(1)		
MAIN BOARD	Engineer: CVP DM HW		
Size Custom	Project Name EU Lv.2		Rev 1.00
Date: Tuesday, January 29, 2013	Sheet 662 of 76		

663. HDMI HPD(2)

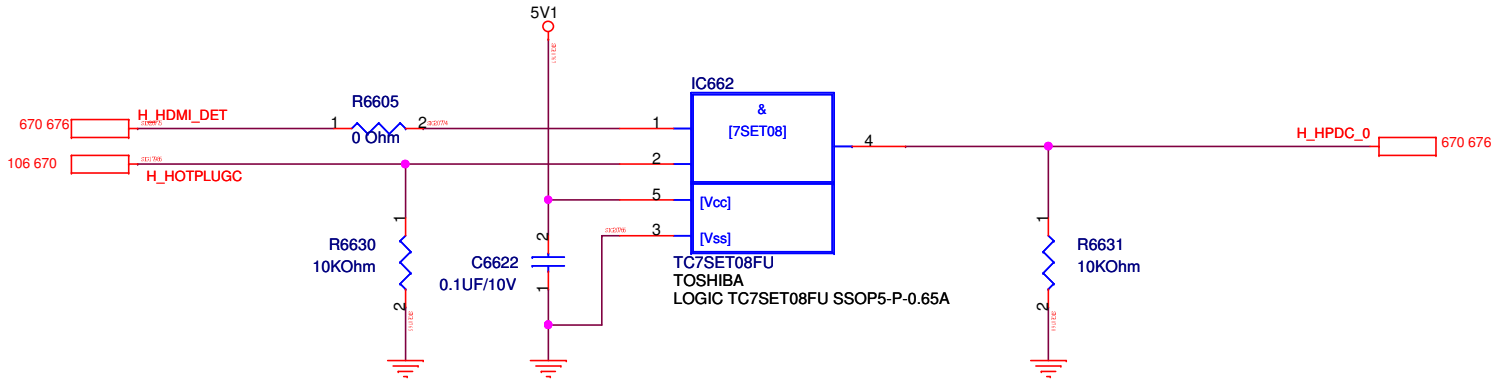

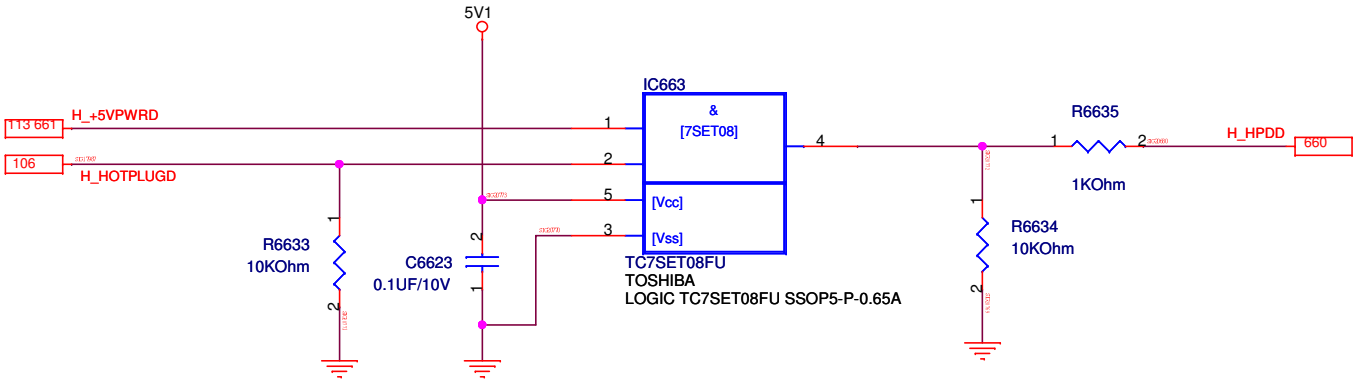

Unihan	Title : 663. HDMI HPD(2)		
MAIN BOARD	Engineer: CVP DM HW		
Size: Custom	Project Name: EU Lv.2		Rev: 1.00
Date: Tuesday, January 29, 2013	Sheet 663 of 76		

664. HDMI DDC

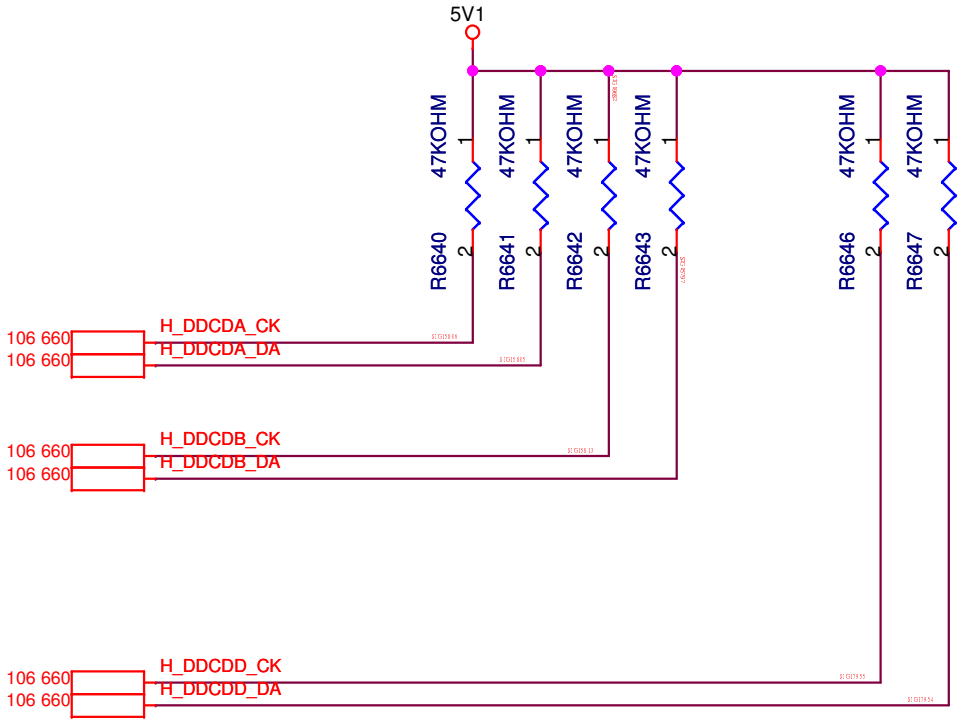

Unihan	Title : 664. HDMI DDC	
MAIN BOARD	Engineer: CVP DM HW	
Size: Custom	Project Name: EU Lv.2	Rev: 1.00
Date: Tuesday, January 29, 2013	Sheet 664 of 76	

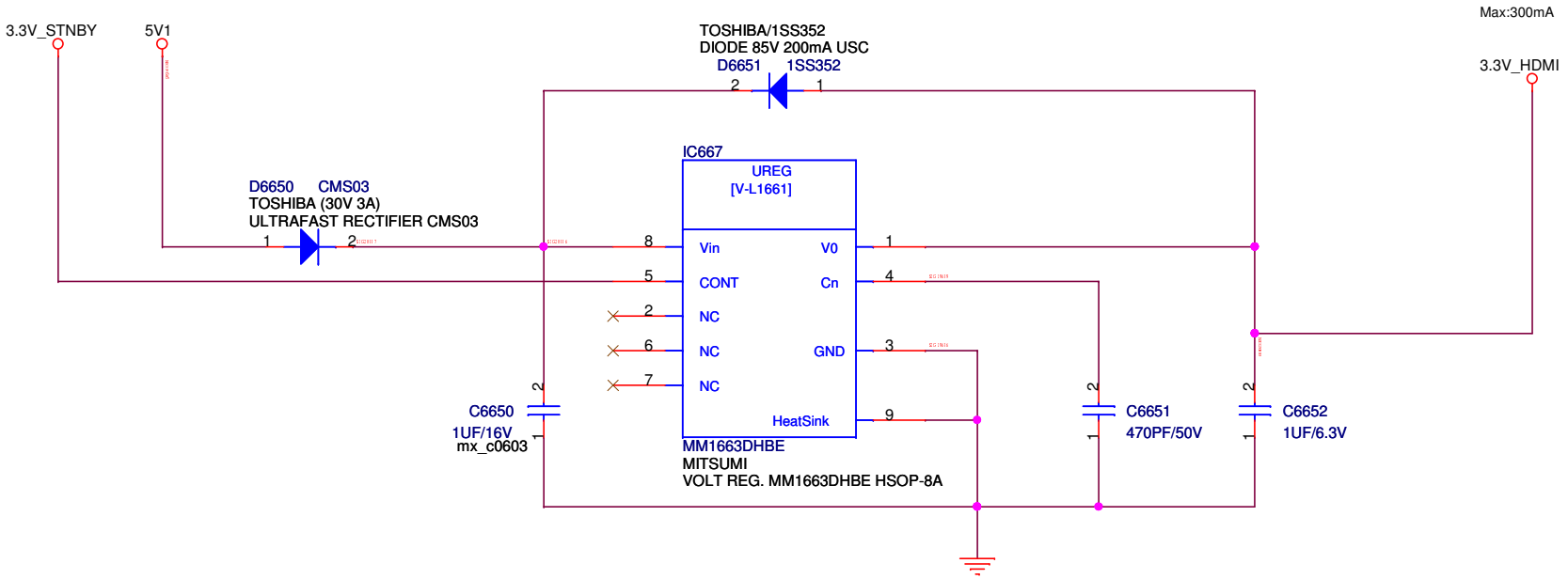

Unihan	Title : 665. 3.3V_HDMI		
MAIN BOARD	Engineer: CVP DM HW		
Size Custom	Project Name EU Lv.2		Rev 1.00
Date: Tuesday, January 29, 2013	Sheet 665 of 76		

669. HDMI HDCP Key ROM

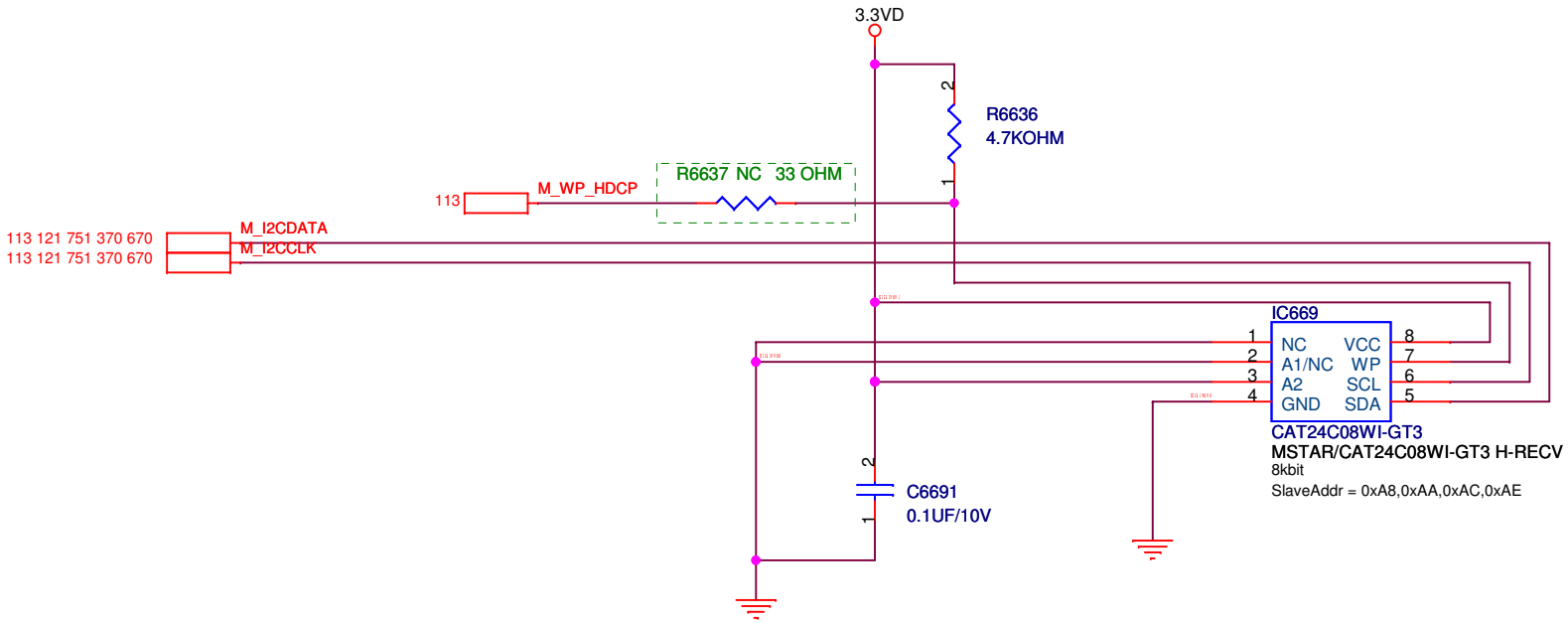

Unihan	Title : 665. 3.3V_HDMI		
MAIN BOARD	Engineer: CVP DM HW		
Size: Custom	Project Name: EU Lv.2		Rev: 1.00
Date: Tuesday, January 29, 2013	Sheet 669 of 76		

670. MHL BRIDGE 1/2

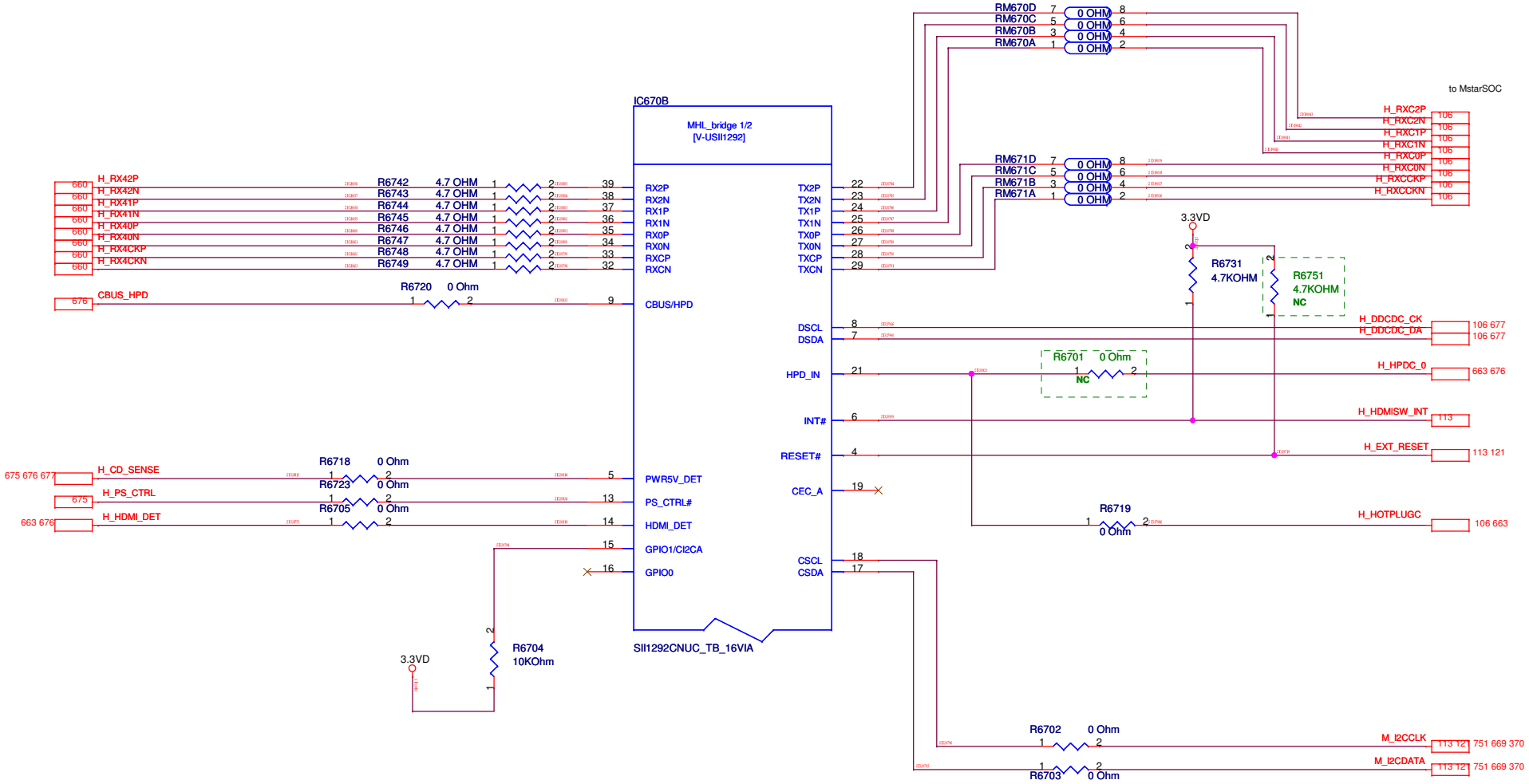

Unihan	Title : 670. MHL BRIDGE 1/2		
MAIN BOARD	Engineer: CVP DM HW		
Size: Custom	Project Name: EU Lv.2		Rev: 1.00
Date: Tuesday, January 29, 2013	Sheet 670 of 76		

672. MHL BRIDGE 2/2

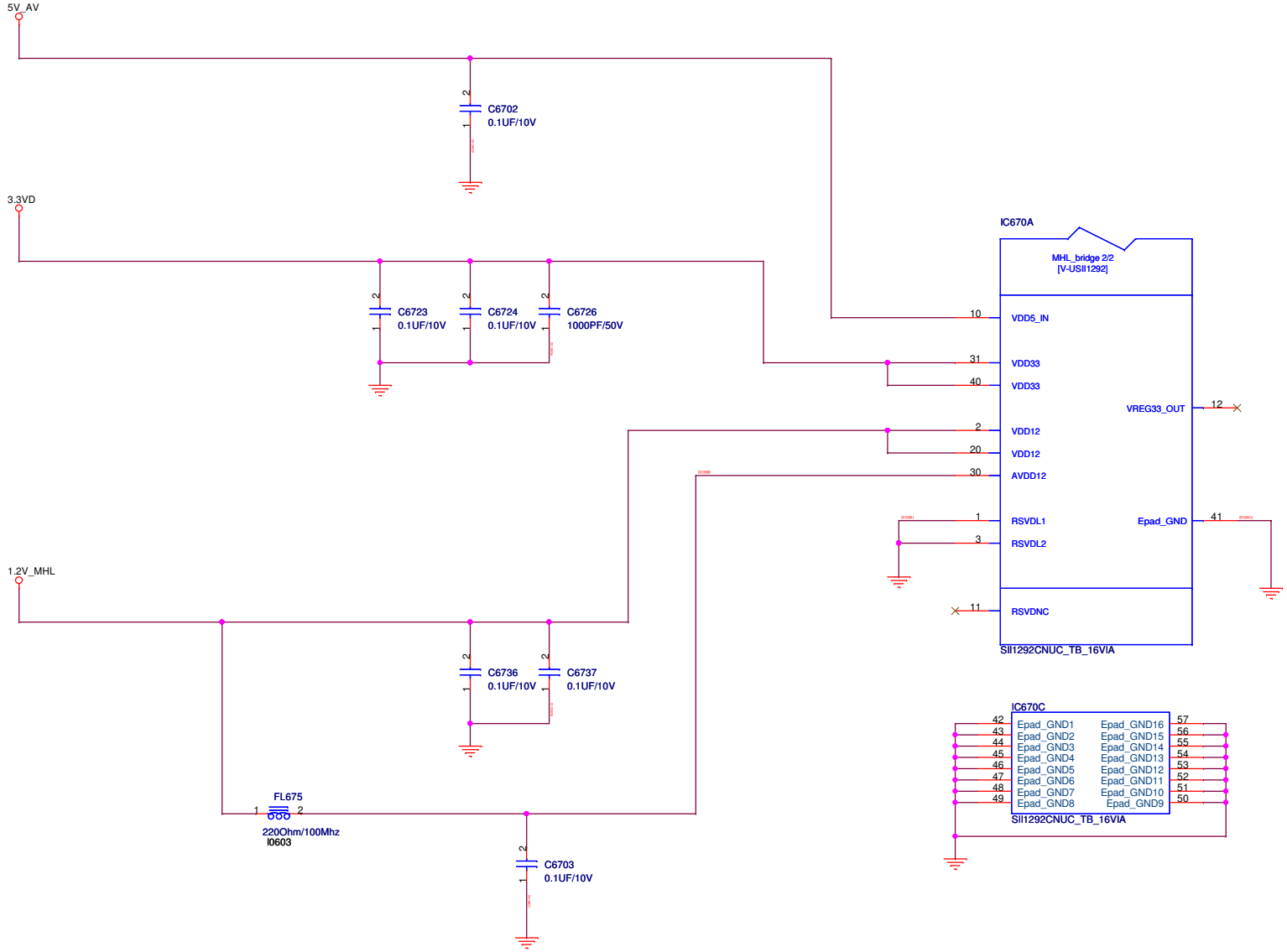

Unihan	Title : 672. MHL BRIDGE 2/2	
MAIN BOARD	Engineer: CVP DM HW	
Size A3	Project Name EU Lv.2	Rev 1.00
Date: Tuesday, January 29, 2013	Sheet 672 of 76	

674. MHL Power

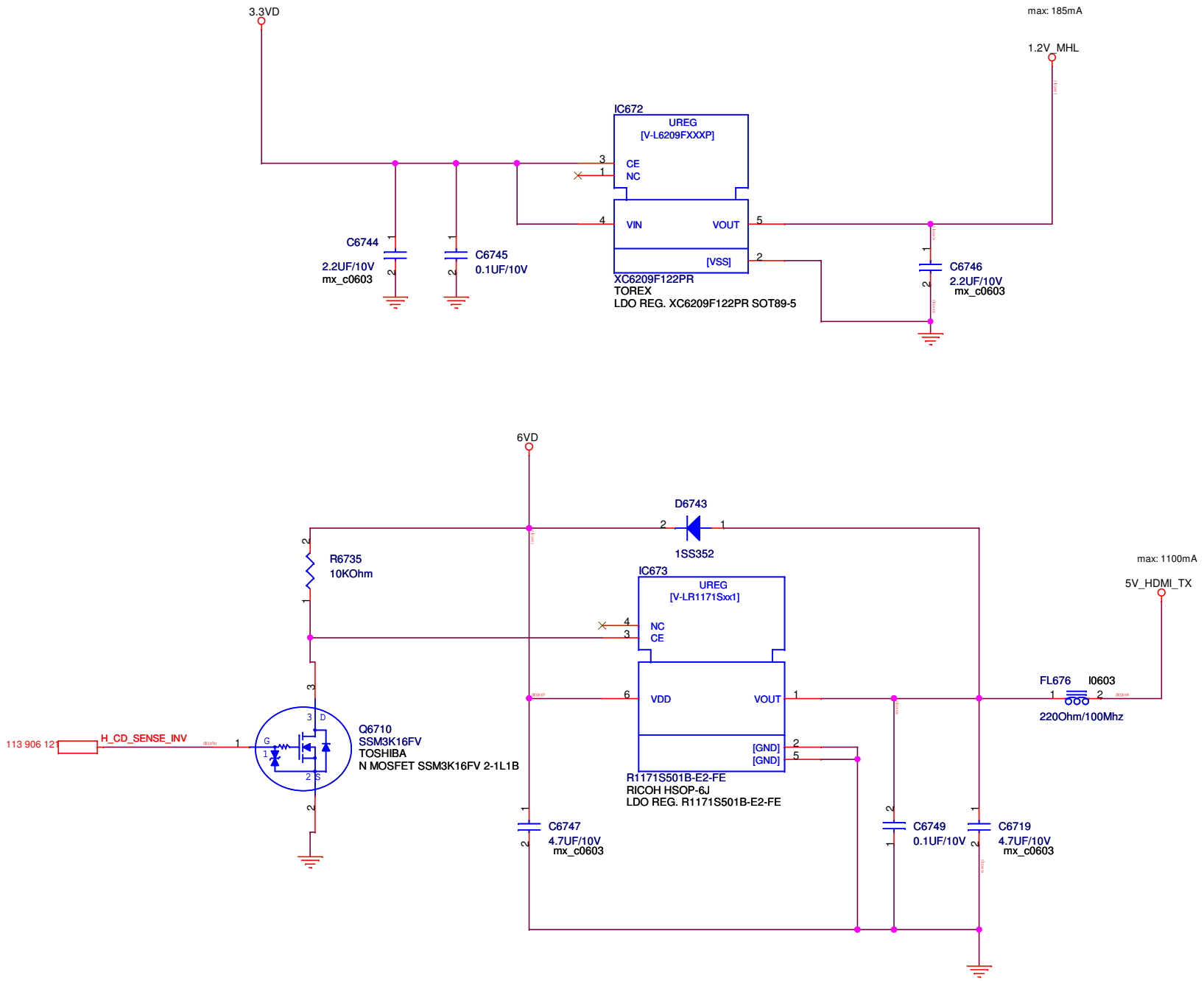

Unihan	Title : 674. MHL Power		
MAIN BOARD	Engineer: CVP DM HW		
Size	Project Name		Rev
Custom	EU Lv.2		1.00
Date: Tuesday, January 29, 2013		Sheet 674 of 76	

675. MHL VBUS PWR

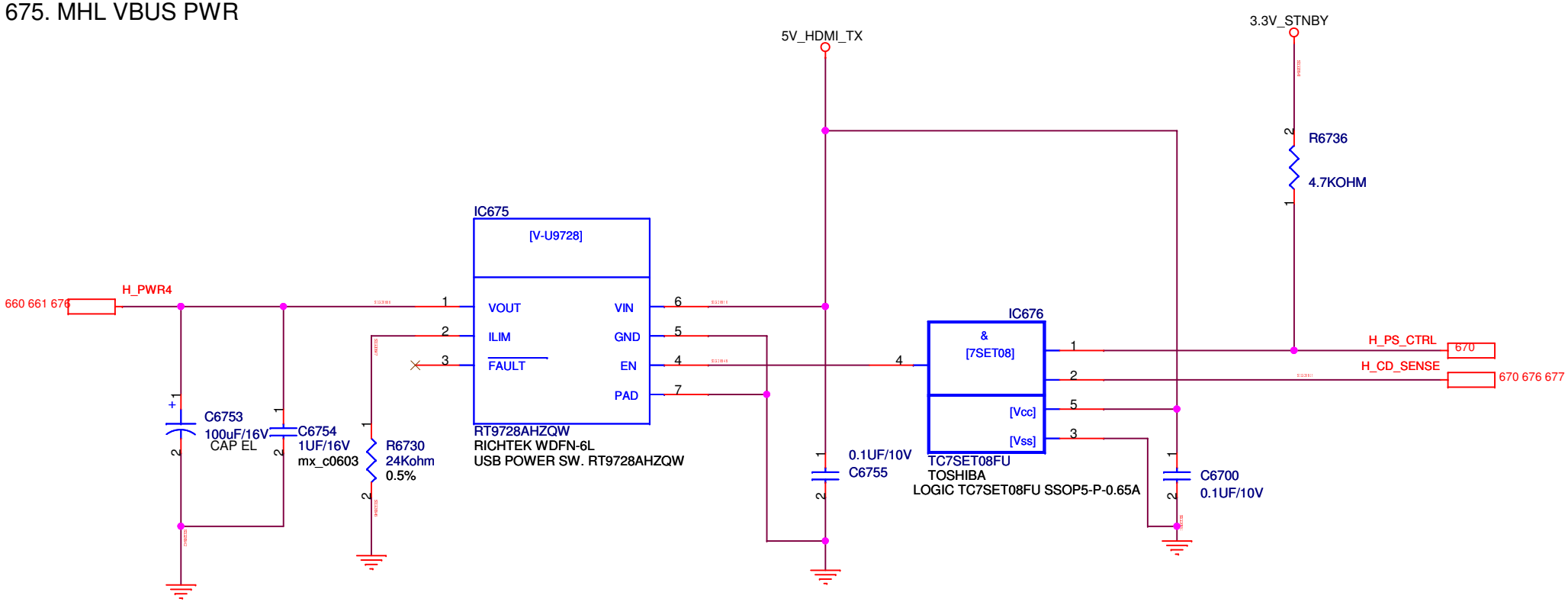

Unihan	Title : 675. MHL VBUS PWR		
MAIN BOARD	Engineer: CVP DM HW		
Size A4	Project Name EU Lv.2		Rev 1.00
Date: Tuesday, January 29, 2013	Sheet 675 of 76		

676. HDMI CBUS HPD

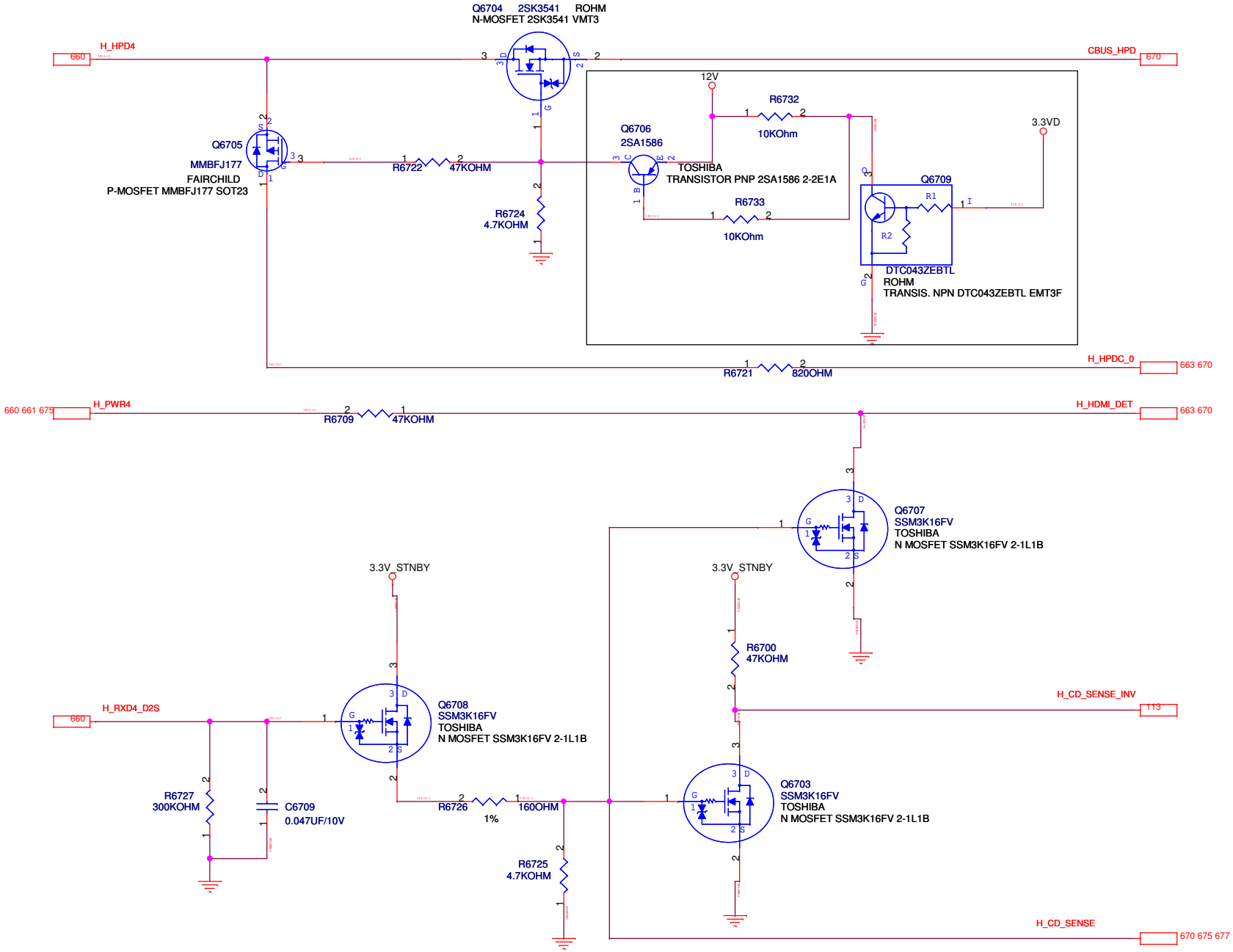

Unihan	Title : 676. HDMI CBUS HPD		
MAIN BOARD	Engineer: CVP DM HW		
Size Custom	Project Name EU Lv.2		Rev 1.00
Date: Tuesday, January 29, 2013	Sheet 676 of 76		

677. HDMI4 DDC

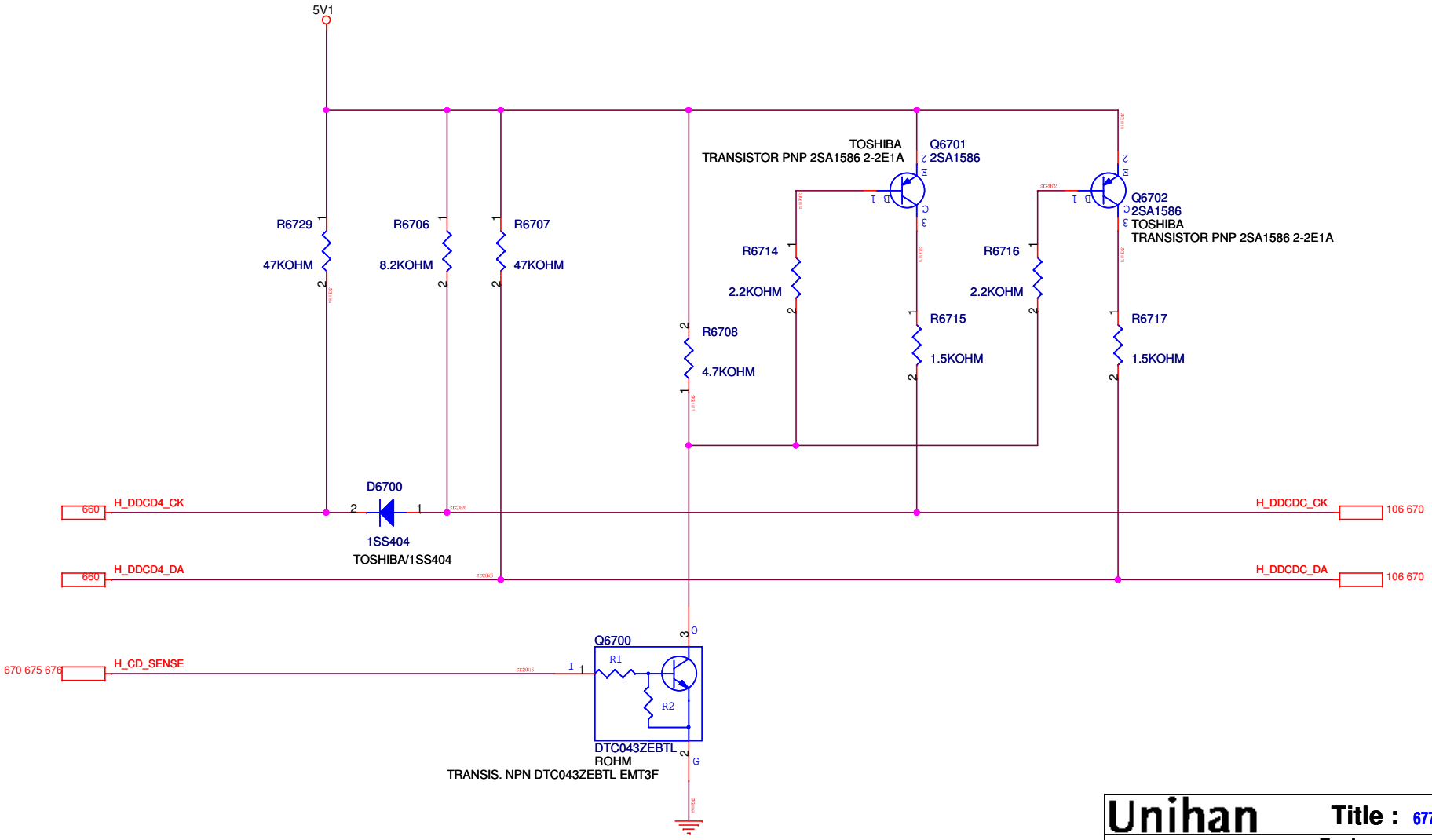

Unihan	Title : 677. HDMI4 DDC		
MAIN BOARD	Engineer: CVP DM HW		
Size: Custom	Project Name: EU Lv.2		Rev: 1.00
Date: Tuesday, January 29, 2013	Sheet 677 of 76		

700. LED/RMT/KEY IF

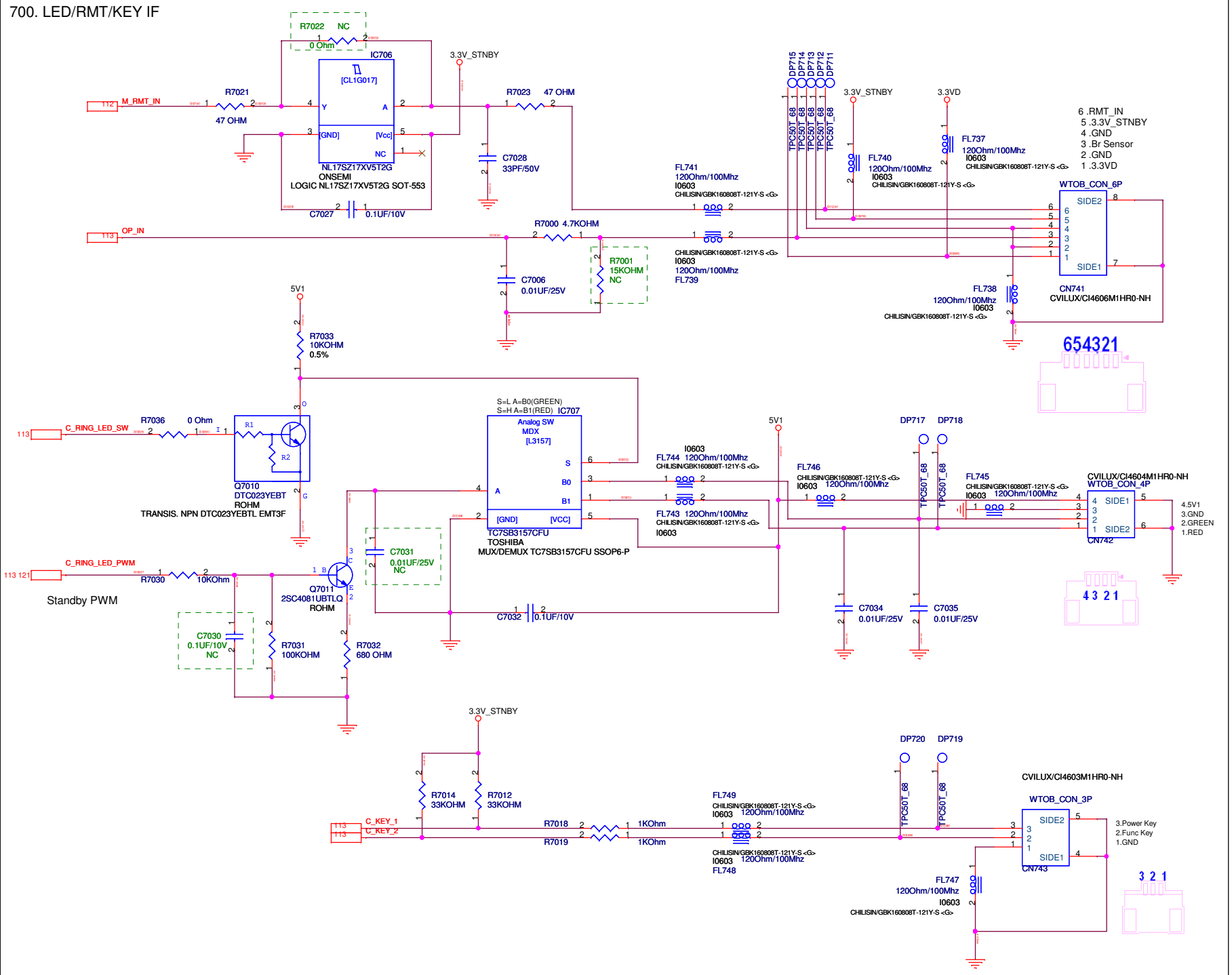

Unihan	Title : 700. LED/RMT/KEY IF	
MAIN BOARD	Engineer: CVP DM HW	
Size: Custom	Project Name: EU Lv.2	Rev: 1.00
Date: Tuesday, January 29, 2013	Sheet 700 of 76	

750. TUNER

-------+-MOD--+TUNER-+-MSTR-+
DVB-T |TC | 1RF | - |
DVB-T2 |TCT2 | 1RF | 1233 |

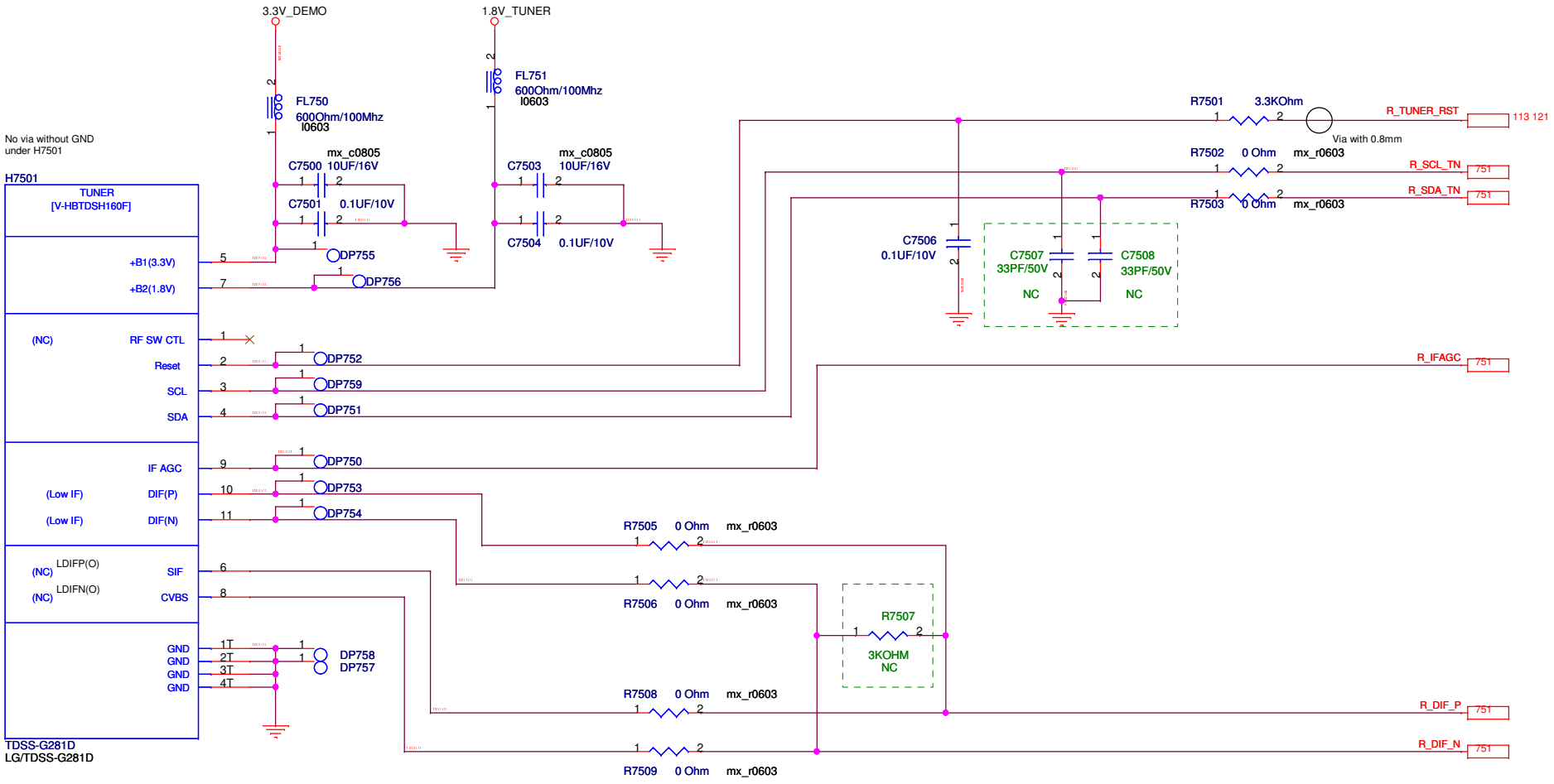

Unihan	Title : 750. TUNER		
MAIN BOARD	Engineer: CVP DM HW		
Size: Custom	Project Name: EU Lv.2		Rev: 1.00
Date: Tuesday, January 29, 2013	Sheet 750 of 76		

751. TUNER IF_AGC

IF Filter

IF? ? GND

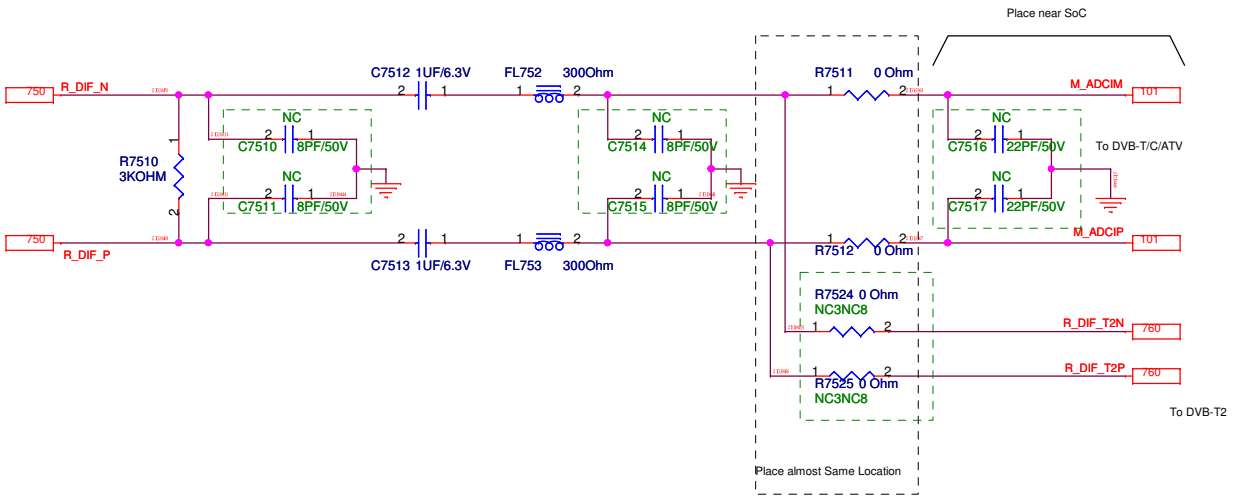

AGC

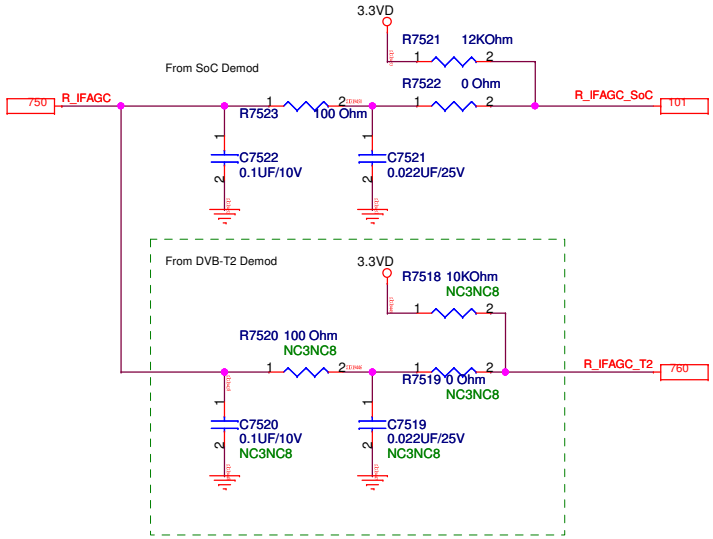

I2C & BUS SW

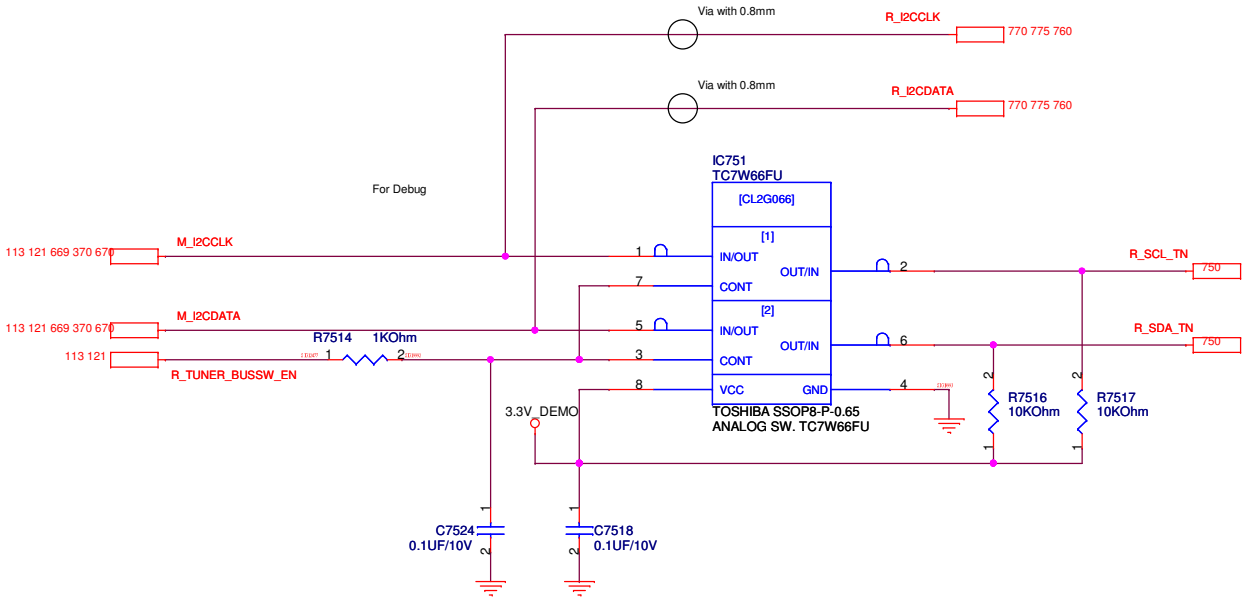

Unihan	Title : 751. TUNER IF_AGC		
MAIN BOARD	Engineer: CVP DM HW		
Size: Custom	Project Name: EU Lv.2		Rev: 1.00
Date: Tuesday, January 29, 2013	Sheet 751 of 76		

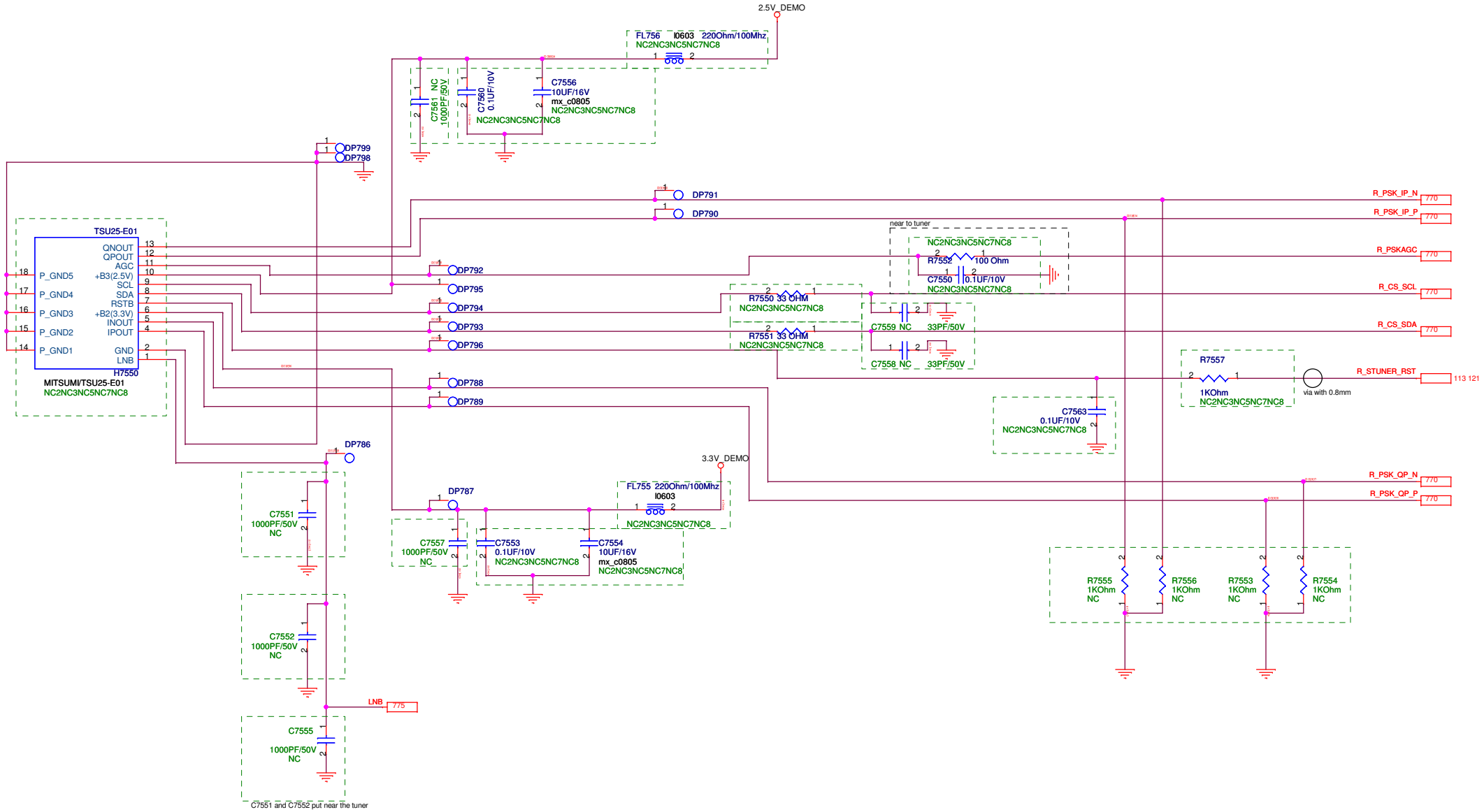

Unihan	Title : 755. TUNER DVB-S/S2	
MAIN BOARD	Engineer: CVP DM HW	
Size A3	Project Name EU Lv.2	Rev 1.00
Date: Tuesday, January 29, 2013	Sheet 755 of 76	

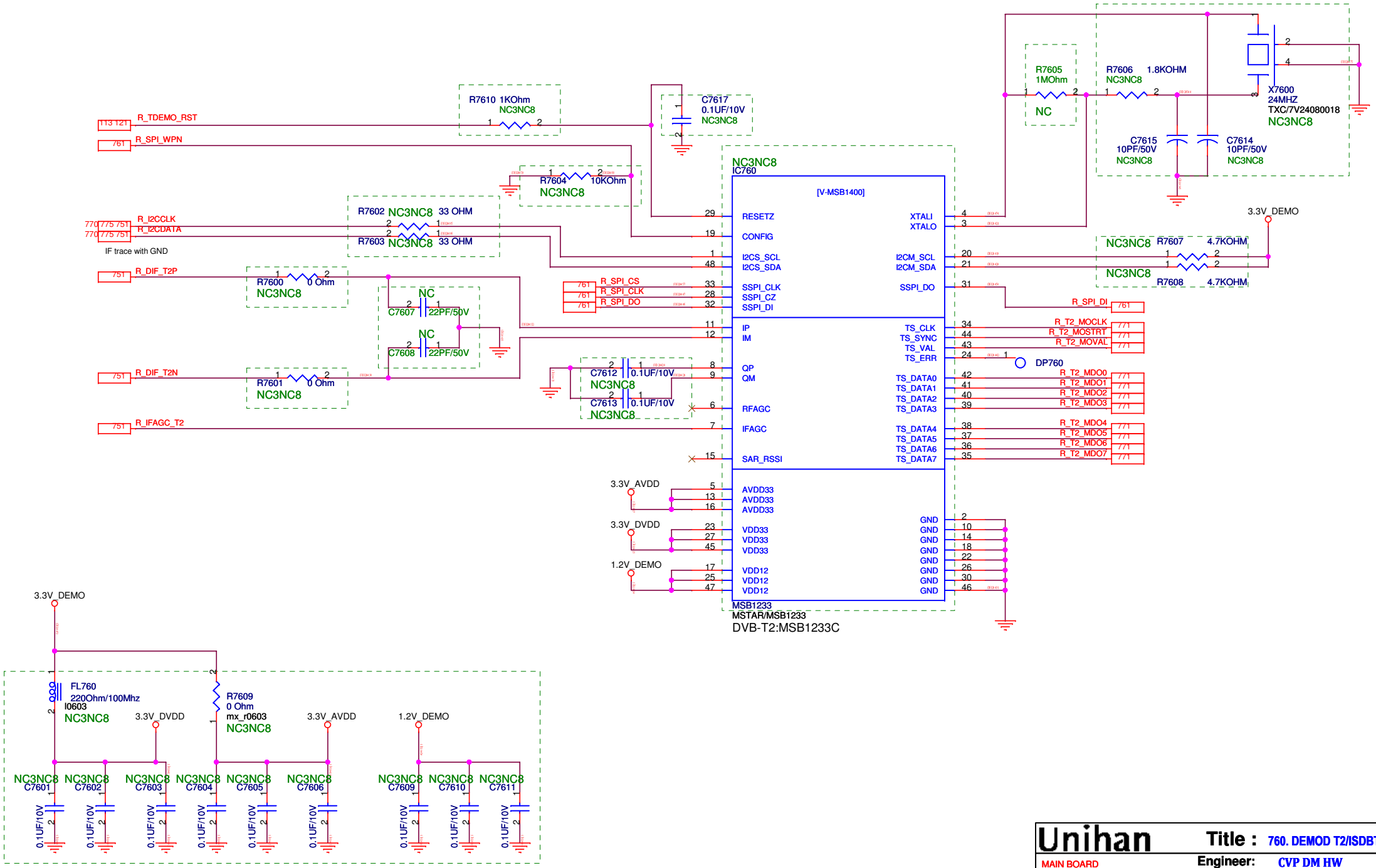

Unihan	Title : 760. DEMOD T2/ISDBT		
MAIN BOARD	Engineer: CVP DM HW		
Size: Custom	Project Name: EU Lv.2		Rev: 1.00
Date: Tuesday, January 29, 2013	Sheet 760 of 76		

761. DEMOD T2 FLASH

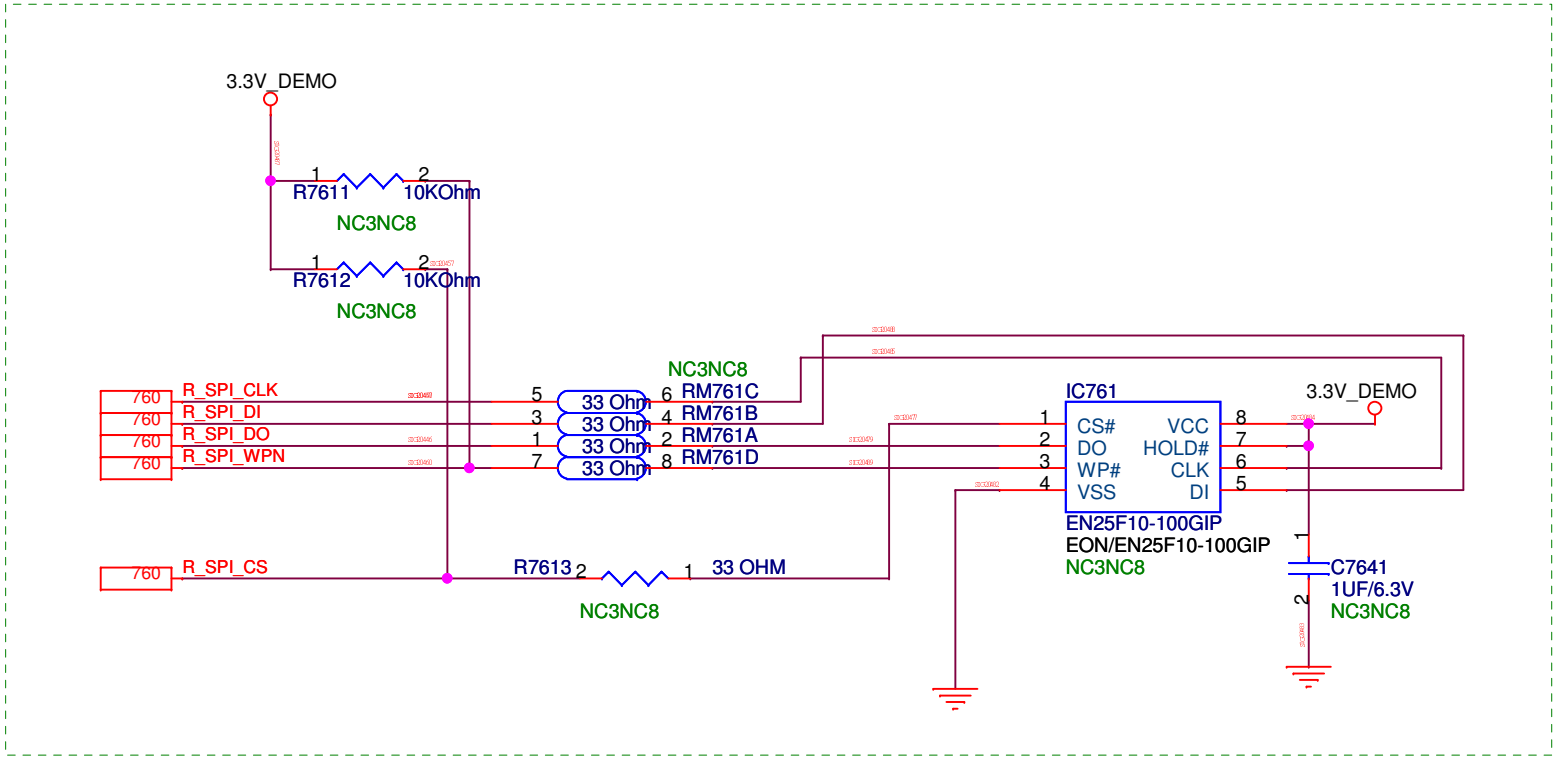

Unihan	Title : 761. DEMOD T2 FLASH		
MAIN BOARD	Engineer: CVP DM HW		
Size: Custom	Project Name: EU Lv.2		Rev: 1.00
Date: Tuesday, January 29, 2013	Sheet 761 of 76		

770. DEMOD DVB-S2/S

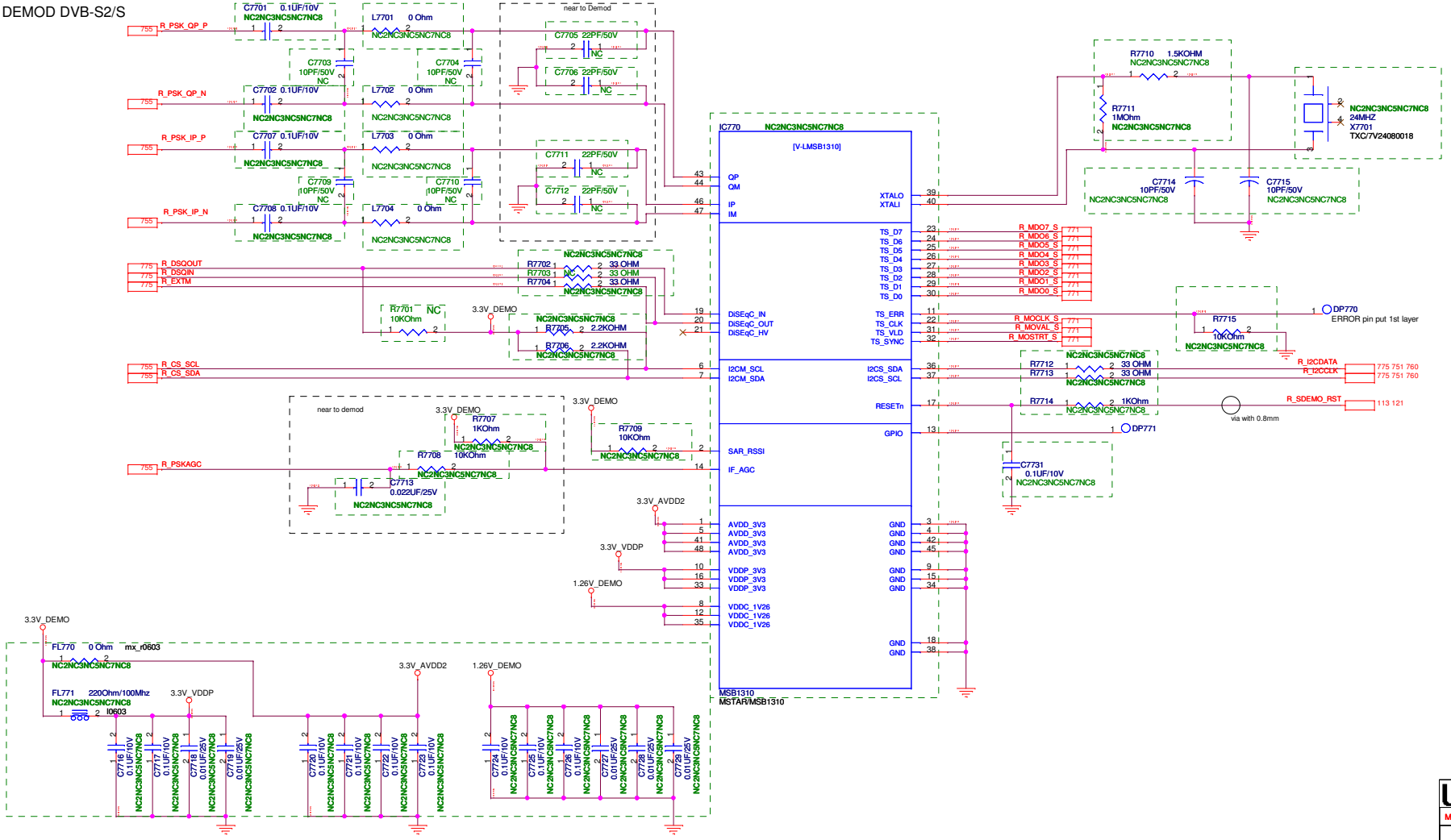

Unihan	Title :	770. DEMOD DVB-S2/S	
MAIN BOARD	Engineer:	CVP DM HW	
Size: Custom	Project Name: EU Lv.2		Rev: 1.00
Date: Tuesday, January 29, 2013	Sheet 770 of 76		

771. DEMOD RESISTORS

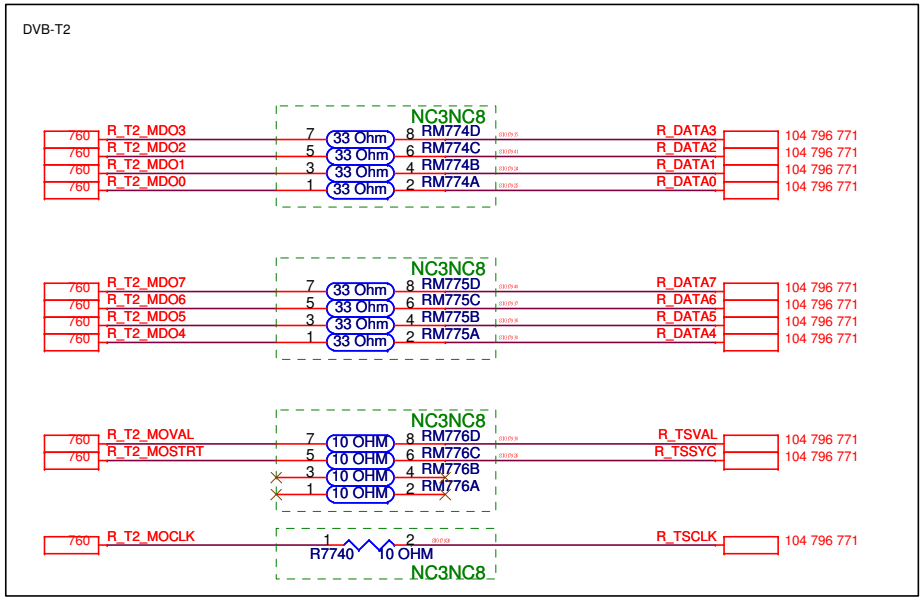

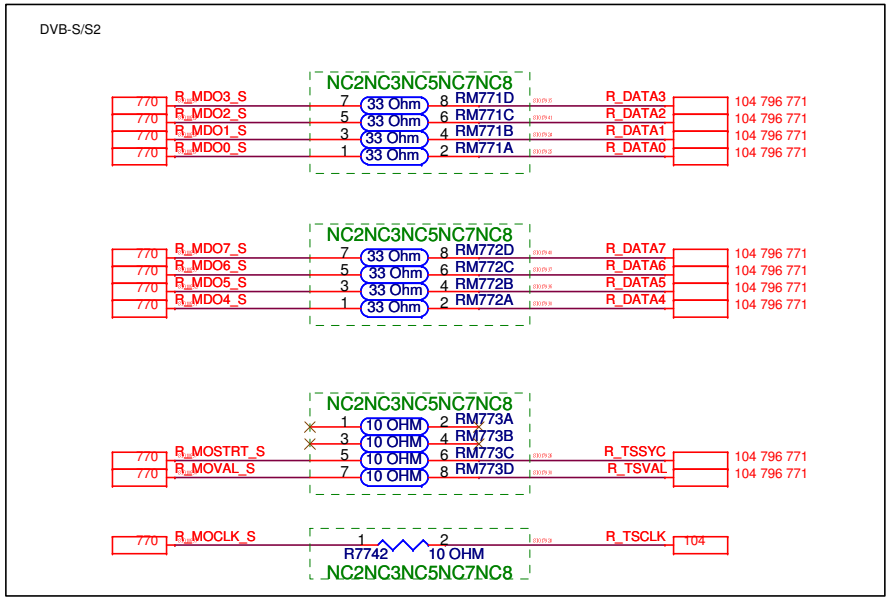

Unihan	Title : 771. DEMOD RESISTORS		
MAIN BOARD	Engineer: CVP DM HW		
Size: Custom	Project Name: EU Lv.2		Rev: 1.00
Date: Tuesday, January 29, 2013	Sheet 771 of 76		

775. DiSEqC, LNB POWER

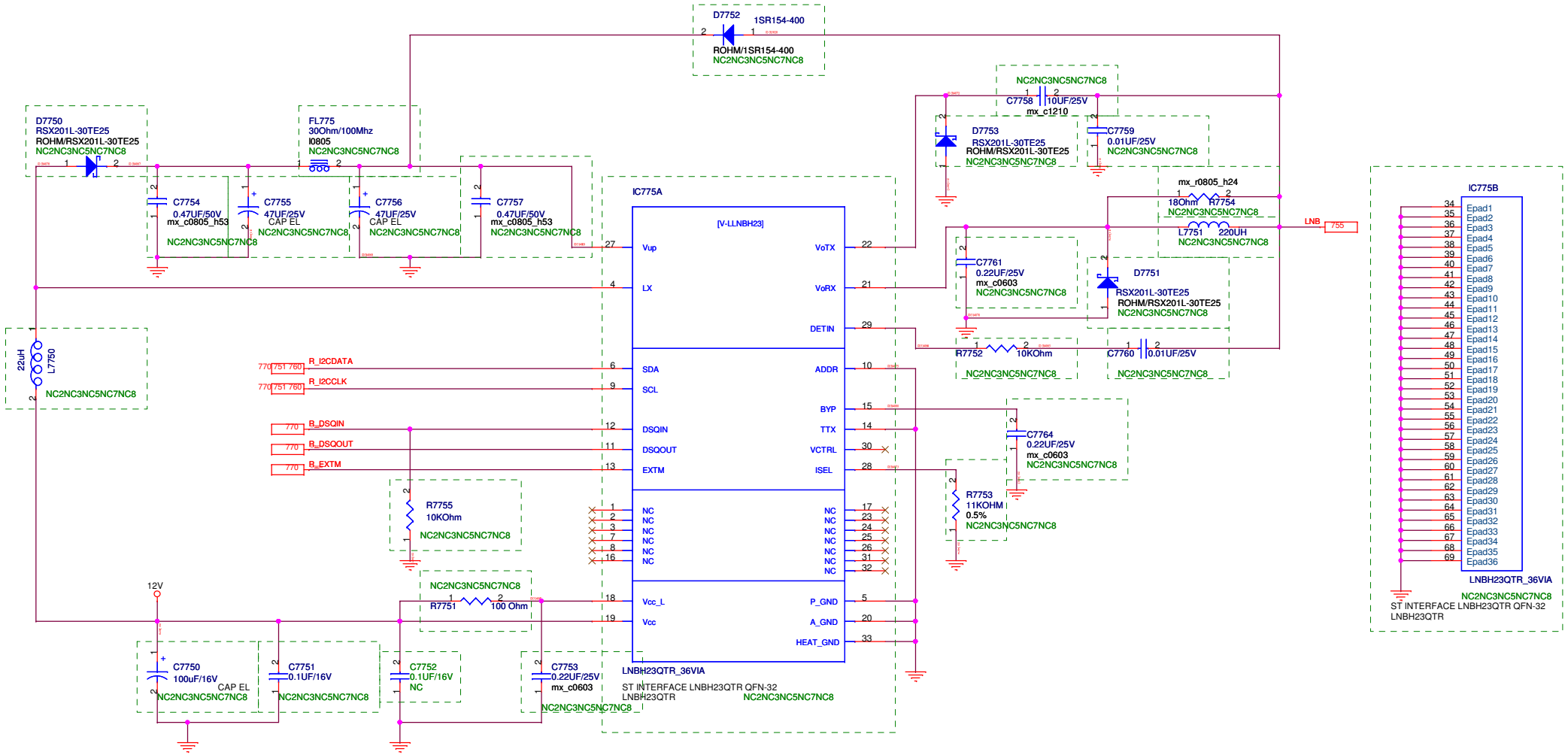

Unihan	Title : 775. DiSEqC, LNB POWER	
MAIN BOARD	Engineer: CVP DM HW	
Size A3	Project Name EU Lv.2	Rev 1.00
Date: Tuesday, January 29, 2013	Sheet 775 of 76	

780. TUNER POWER

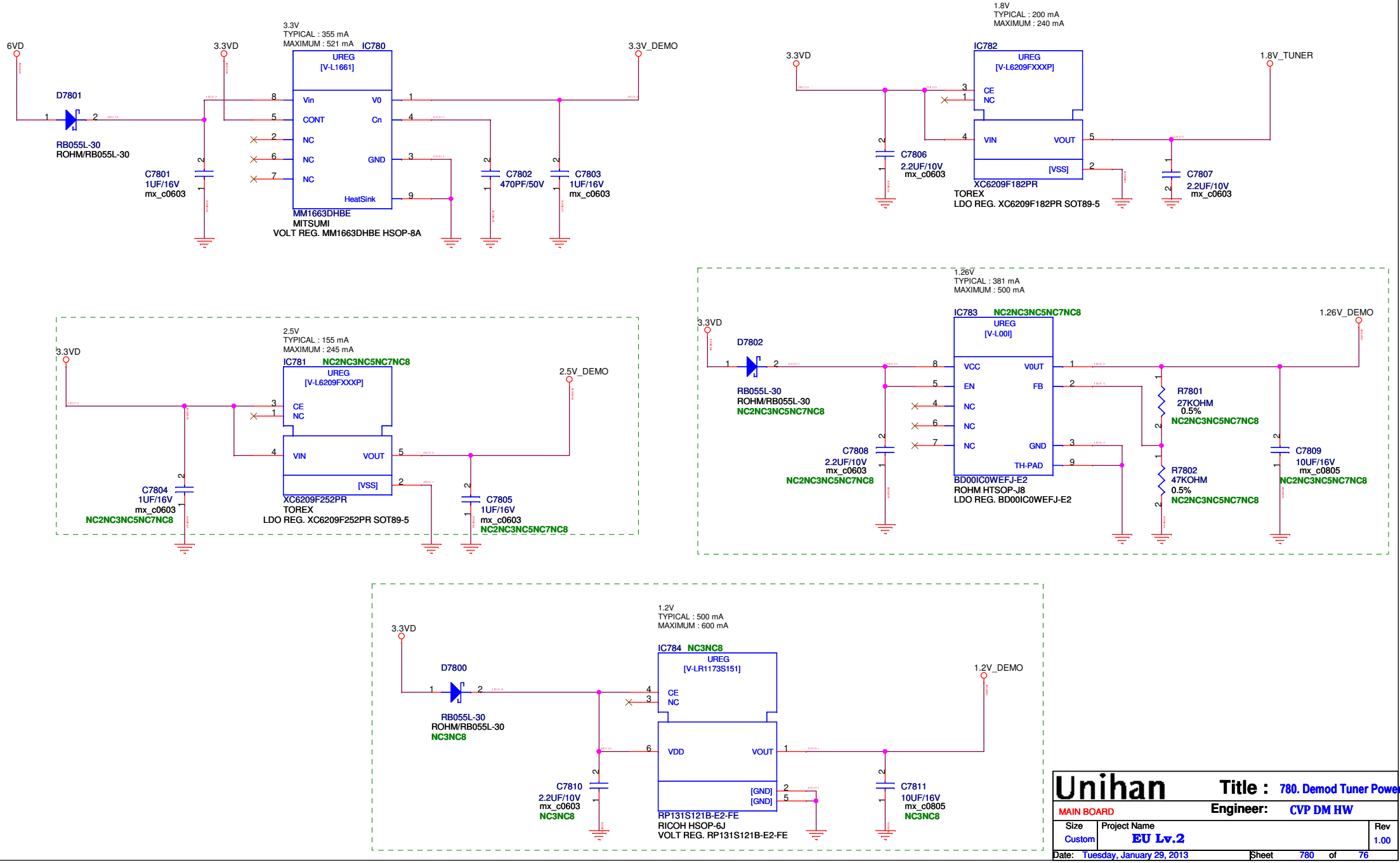

Unihan	Title : 780. Demod Tuner Power		
MAIN BOARD	Engineer: CVP DM HW		
Size: Custom	Project Name: EU Lv.2		Rev: 1.00
Date: Tuesday, January 29, 2013	Sheet 780 of 76		

CI POWER

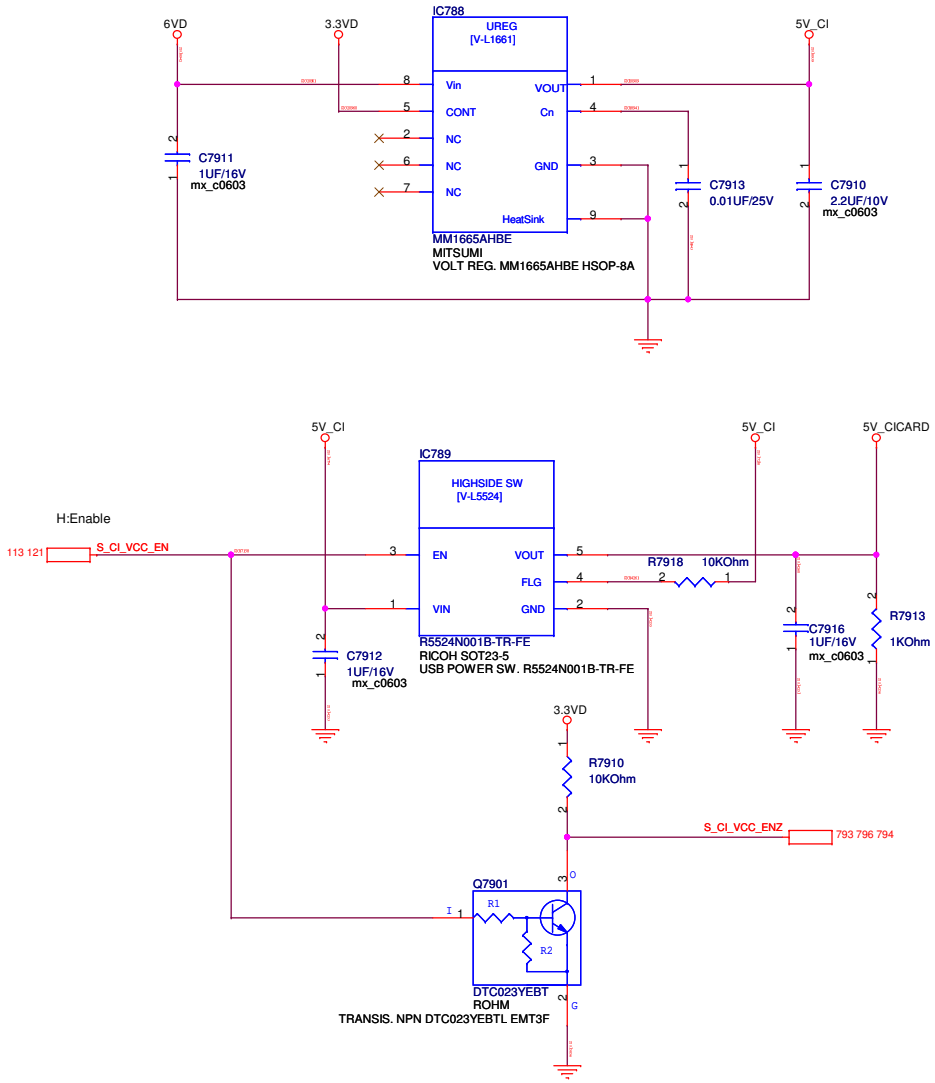

CI CONNECTOR

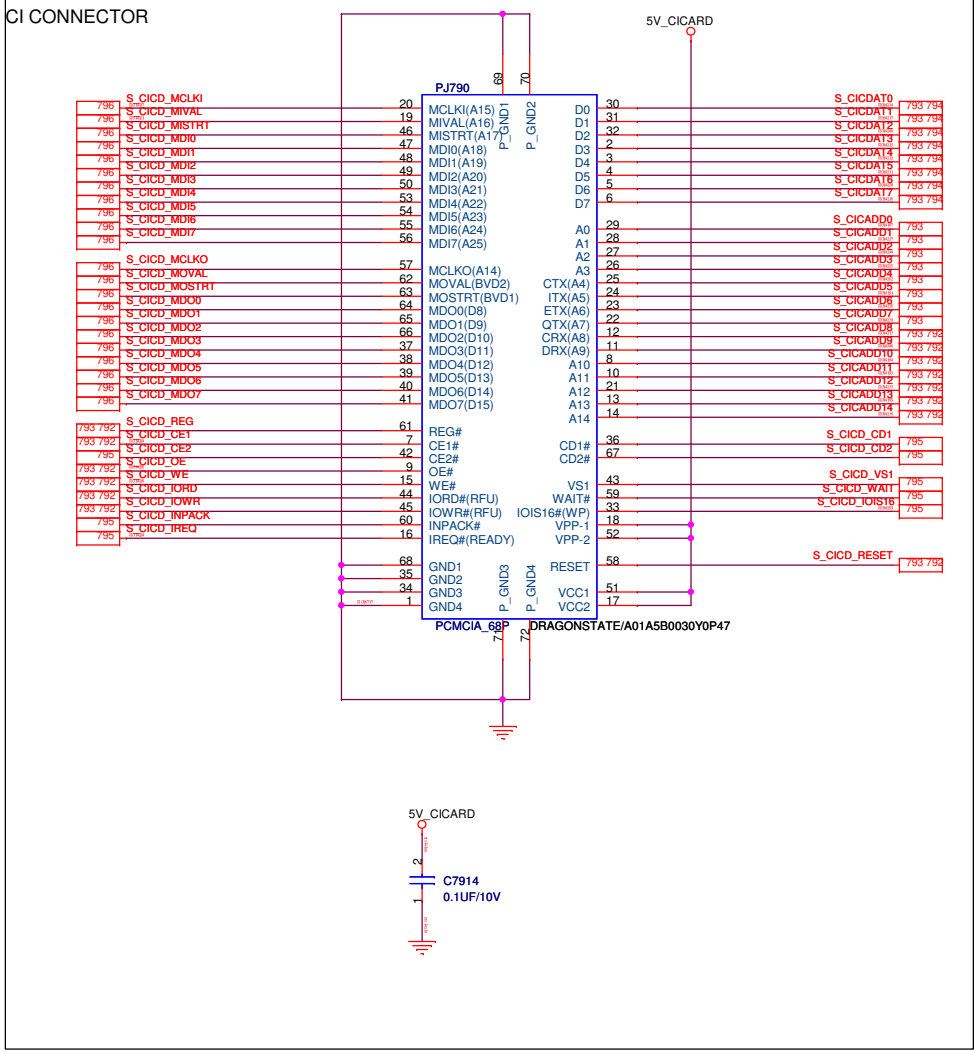

Unihan	Title : 791. CI connector	
MAIN BOARD	Engineer: CVP DM HW	
Size A3	Project Name EU Lv.2	Rev 1.00
Date: Tuesday, January 29, 2013	Sheet 791 of 76	

792. CI BUS1

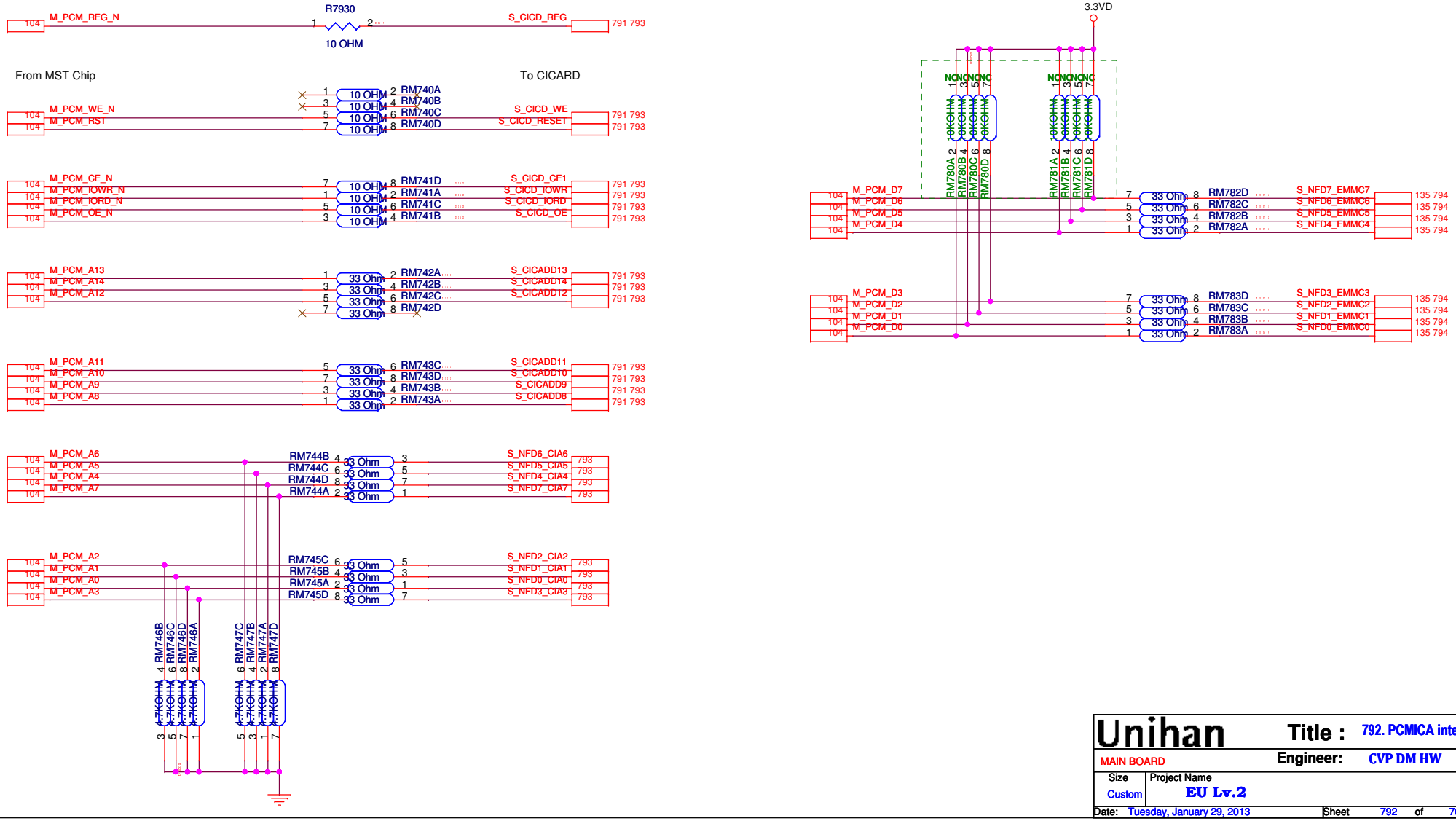

Unihan	Title :	792. PCMICA interface	
MAIN BOARD	Engineer:	CVP DM HW	
Size: Custom	Project Name: EU Lv.2		Rev: 1.00
Date: Tuesday, January 29, 2013	Sheet 792 of 76		

793. CI BUS2

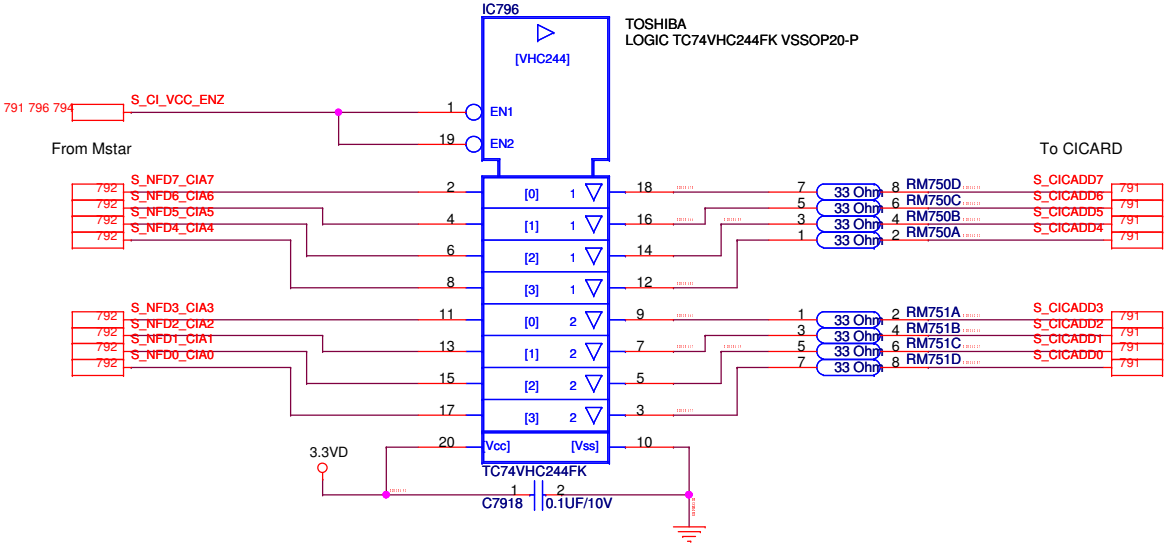

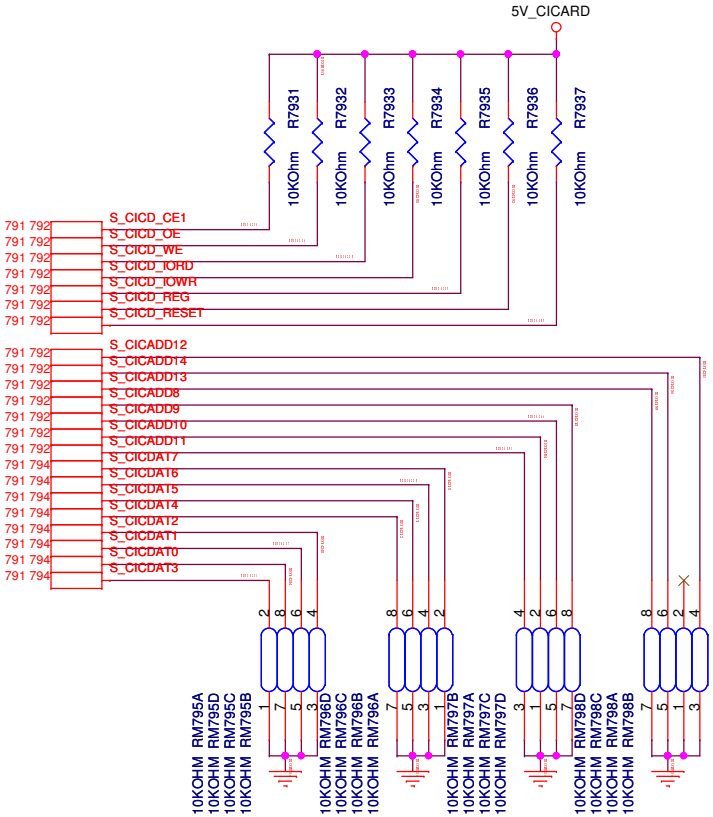

Unihan	Title : 793. CI BUS2	
MAIN BOARD	Engineer: CVP DM HW	
Size: Custom	Project Name: EU Lv.2	Rev: 1.00
Date: Tuesday, January 29, 2013	Sheet 793 of 76	

794. CI BUS3

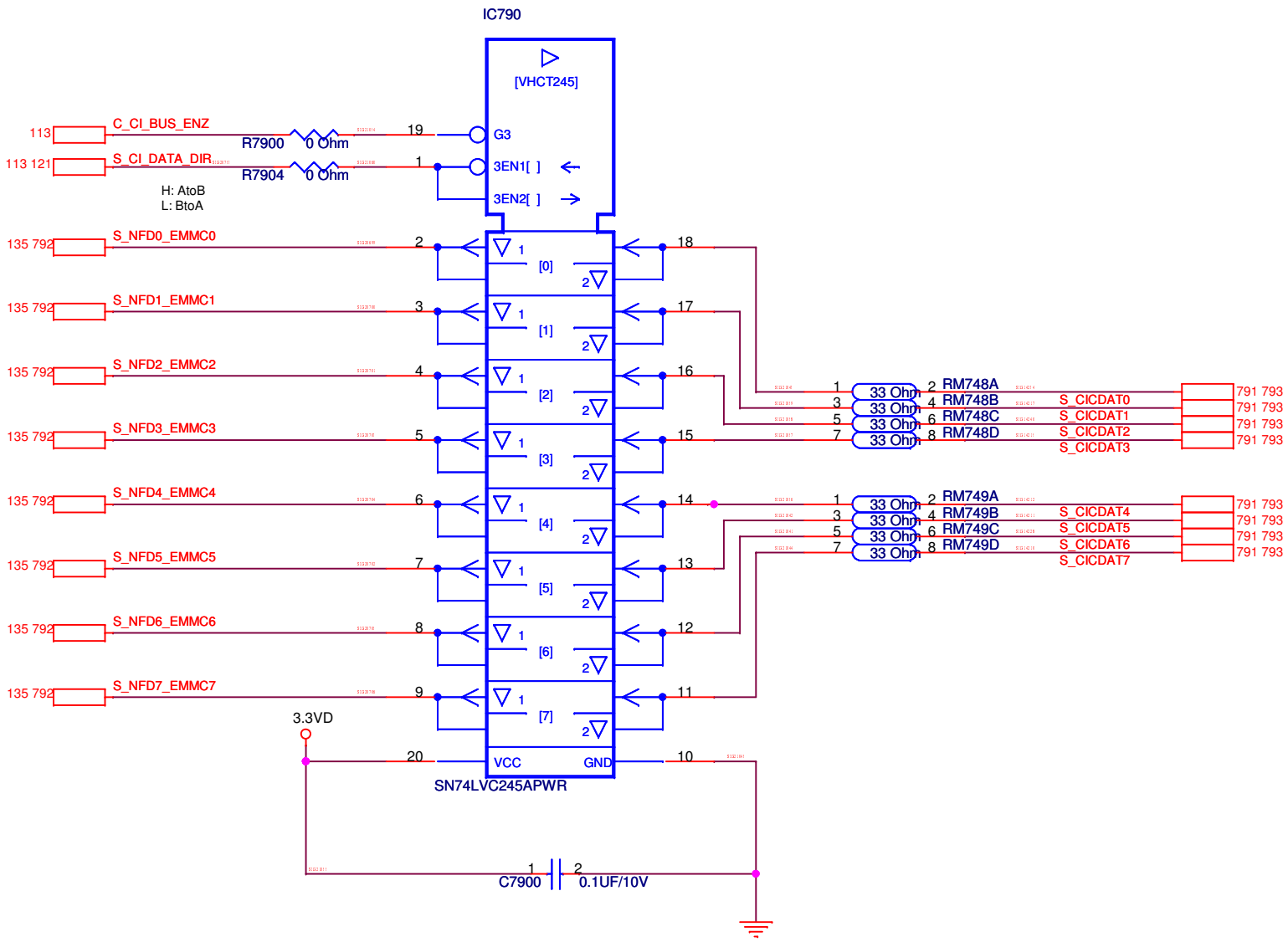

Unihan

Title : 794. CI BUS3

795. CI CONTROL

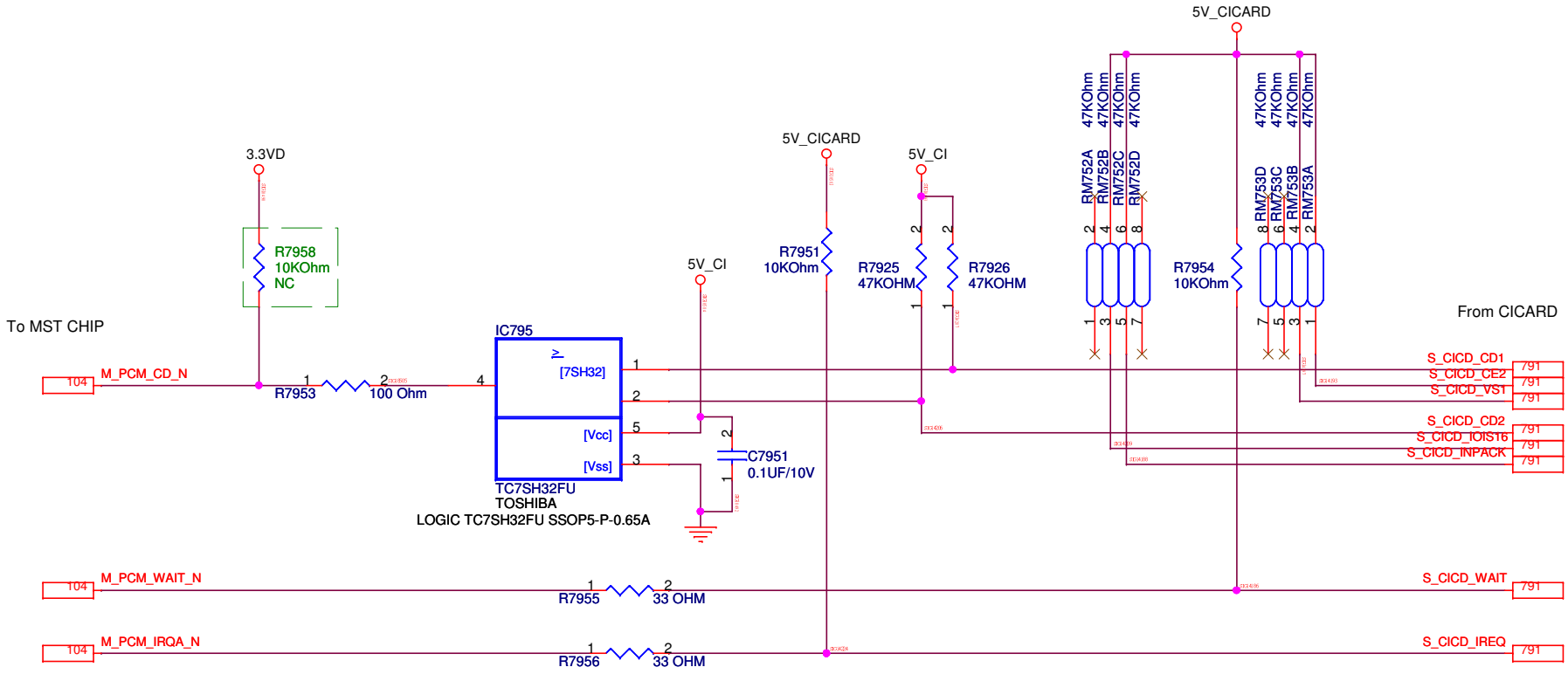

Unihan	Title : 795. CI CONTROL		
MAIN BOARD	Engineer: CVP DM HW		
Size: Custom	Project Name: EU Lv.2		Rev: 1.00
Date: Tuesday, January 29, 2013	Sheet 795 of 76		

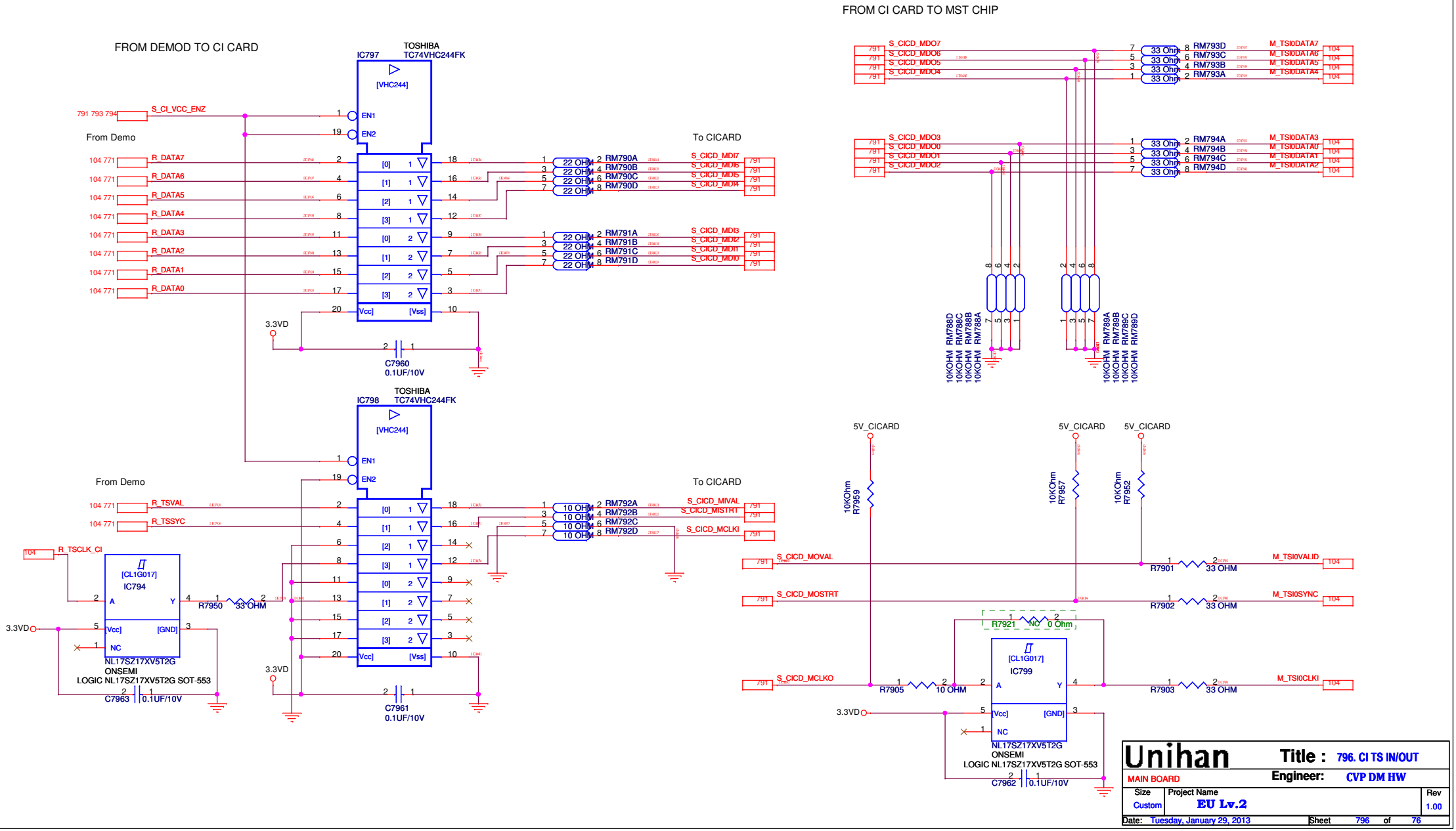
FROM DEMOD TO CI CARD
IC797
TOSHIBA
TC74VHC244FK
[VHC244]
S_CI_VCC_ENZ
EN1
EN2
From Demo
R_DATA7
R_DATA6
R_DATA5
R_DATA4
R_DATA3
R_DATA2
R_DATA1
R_DATA0
To CICARD
RM790A
RM790B
RM790C
RM790D
RM791A
RM791B
RM791C
RM791D
S_CICD_MDI7
S_CICD_MDI6
S_CICD_MDI5
S_CICD_MDI4
S_CICD_MDI3
S_CICD_MDI2
S_CICD_MDI1
S_CICD_MDI0
22 OHM
3.3VD
C7960
0.1UF/10V
IC798
TOSHIBA
TC74VHC244FK
R_TSVAL
R_TSSYC
R_TSCLK_CI
[CL1G017]
IC794
R7950
33 OHM
NL17SZ17XV5T2G
ONSEMI
LOGIC NL17SZ17XV5T2G SOT-553
C7963
0.1UF/10V
RM792A
RM792B
RM792C
RM792D
10 OHM
S_CICD_MIVAL
S_CICD_MISTRT
S_CICD_MCLKI
C7961
0.1UF/10V
FROM CI CARD TO MST CHIP
S_CICD_MDO7
S_CICD_MDO6
S_CICD_MDO5
S_CICD_MDO4
S_CICD_MDO3
S_CICD_MDO0
S_CICD_MDO1
S_CICD_MDO2
33 Ohm
RM793D
RM793C
RM793B
RM793A
RM794A
RM794B
RM794C
RM794D
M_TSI0DATA7
M_TSI0DATA6
M_TSI0DATA5
M_TSI0DATA4
M_TSI0DATA3
M_TSI0DATA0
M_TSI0DATA1
M_TSI0DATA2
10KOHM RM788D
10KOHM RM788C
10KOHM RM788B
10KOHM RM788A
10KOHM RM789A
10KOHM RM789B
10KOHM RM789C
10KOHM RM789D
5V_CICARD
10KOhm R7959
10KOhm R7957
10KOhm R7952
S_CICD_MOVAL
S_CICD_MOSTRT
S_CICD_MCLKO
R7901
R7902
R7903
R7905
10 OHM
M_TSI0VALID
M_TSI0SYNC
M_TSI0CLKI
R7921
NC
0 Ohm
IC799
NL17SZ17XV5T2G
ONSEMI
LOGIC NL17SZ17XV5T2G SOT-553
C7962
0.1UF/10V
Unihan
Title : 796. CI TS IN/OUT
MAIN BOARD
Engineer: CVP DM HW
Size
Custom
Project Name
EU Lv.2
Rev
1.00
Date: Tuesday, January 29, 2013
Sheet 796 of 76

901. POWER 3.3V STANDBY

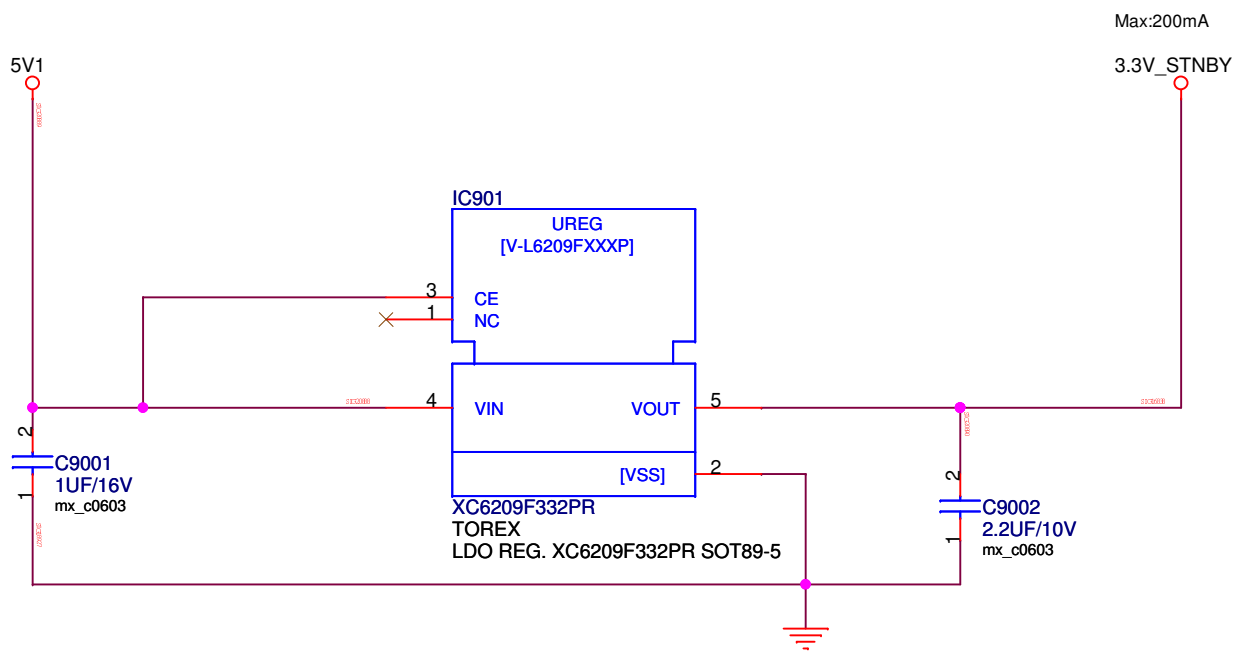

Unihan	Title : 901. POWER 3.3V STANDBY	
MAIN BOARD	Engineer: CVP DM HW	
Size: Custom	Project Name: EU Lv.2	Rev: 1.00
Date: Tuesday, January 29, 2013	Sheet 901 of 76	

902. POWER 1.15V(CORE)

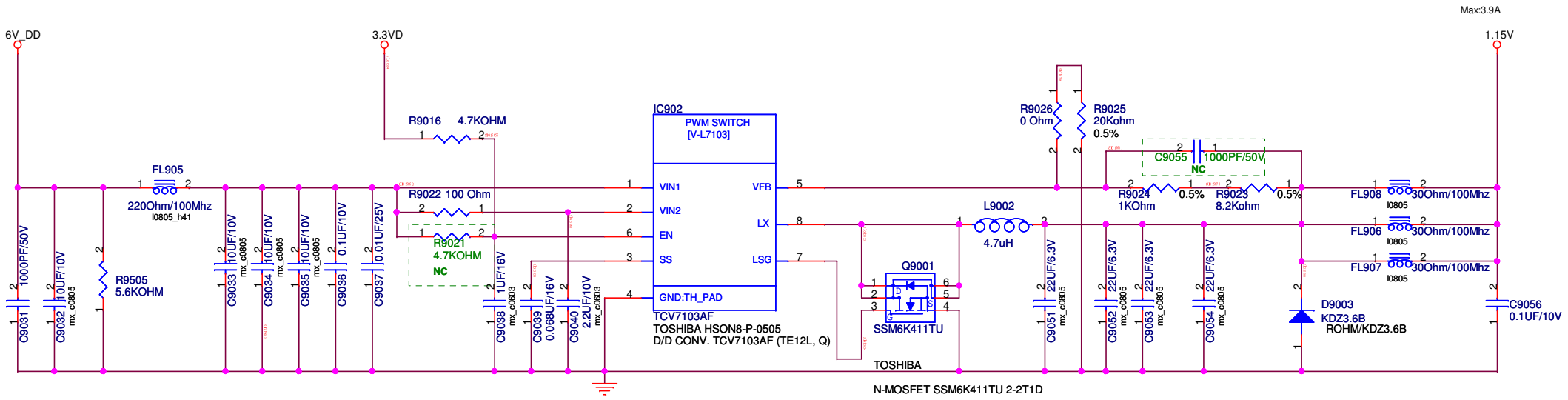

Unihan	Title : 902. POWER 1.15V(CORE)		
MAIN BOARD	Engineer: CVP DM HW		
Size: Custom	Project Name: EU Lv.2		Rev: 1.00
Date: Tuesday, January 29, 2013	Sheet 902 of 76		

905. POWER 3.3V

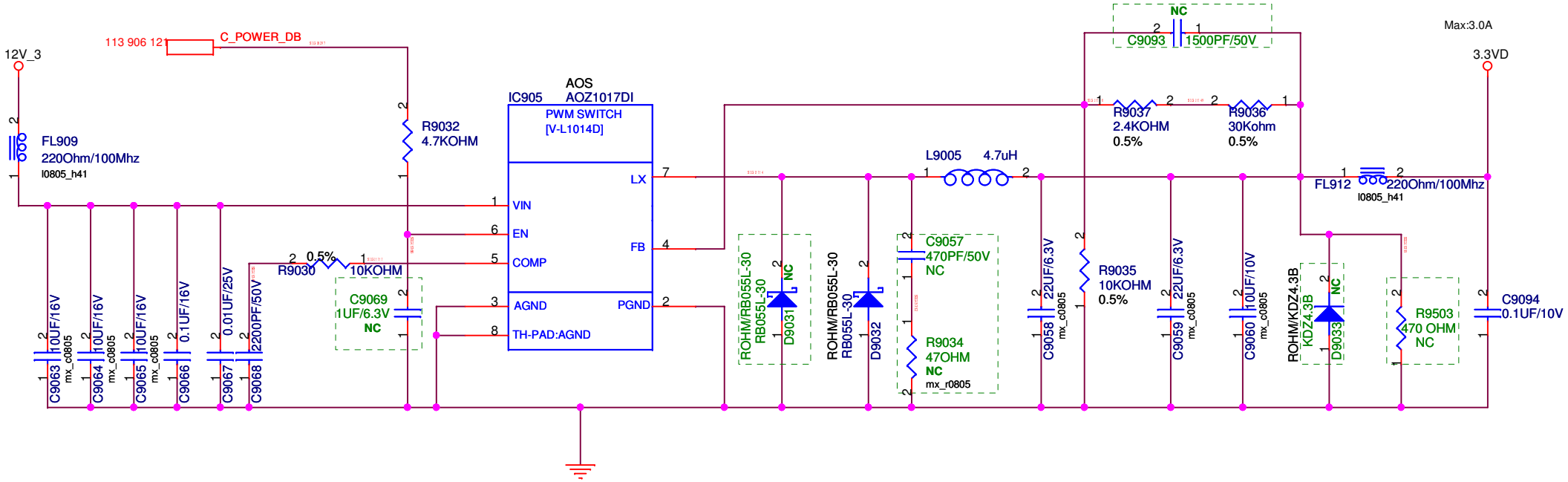

Unihan	Title : 905. POWER 3.3V		
MAIN BOARD	Engineer: CVP DM HW		
Size: Custom	Project Name: EU Lv.2		Rev: 1.00
Date: Tuesday, January 29, 2013	Sheet 905 of 76		

906. POWER 6V/5V

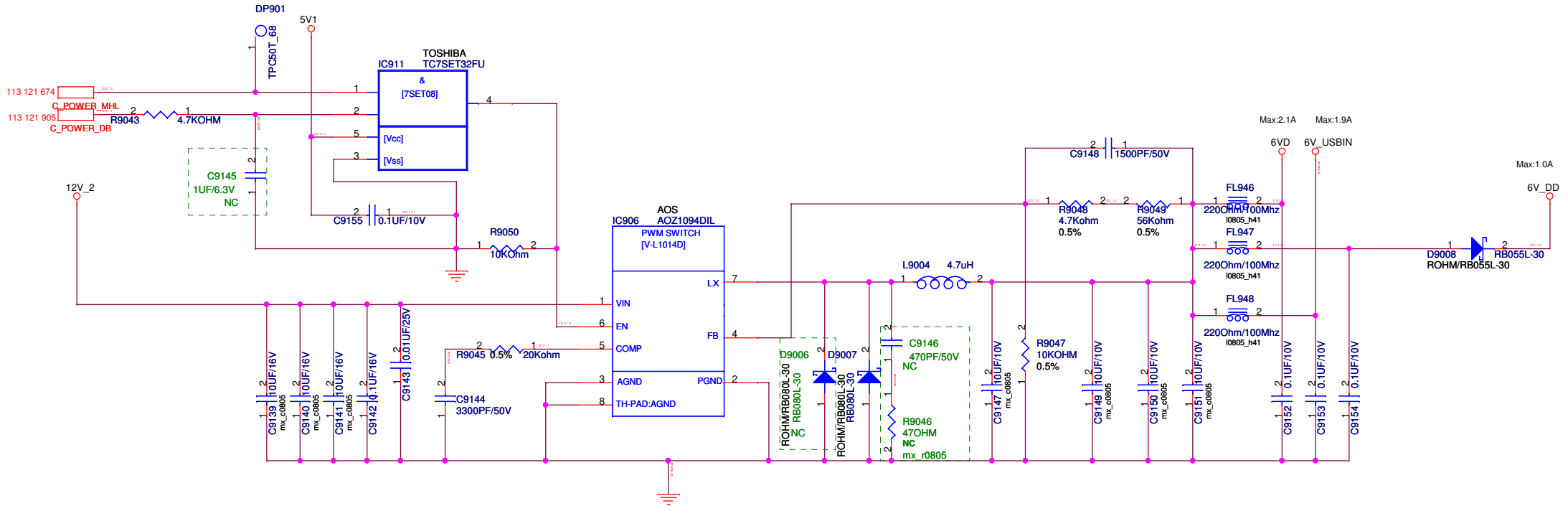

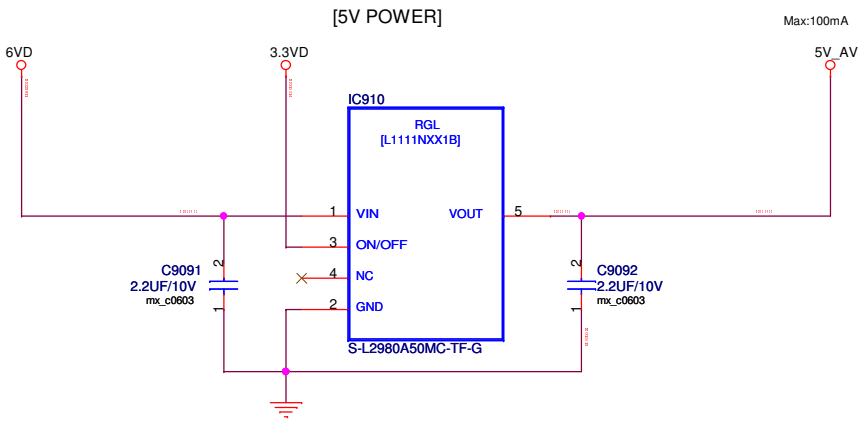

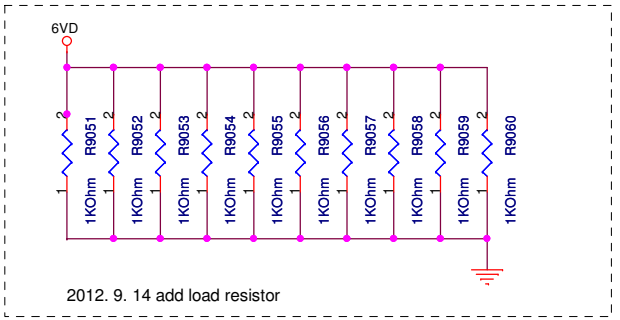

Unihan	Title : 906. POWER 6V/5V		
MAIN BOARD	Engineer: CVP DM HW		
Size: Custom	Project Name: EU Lv.2		Rev: 1.00
Date: Tuesday, January 29, 2013	Sheet 906 of 76		

950. POWER CONNECTOR

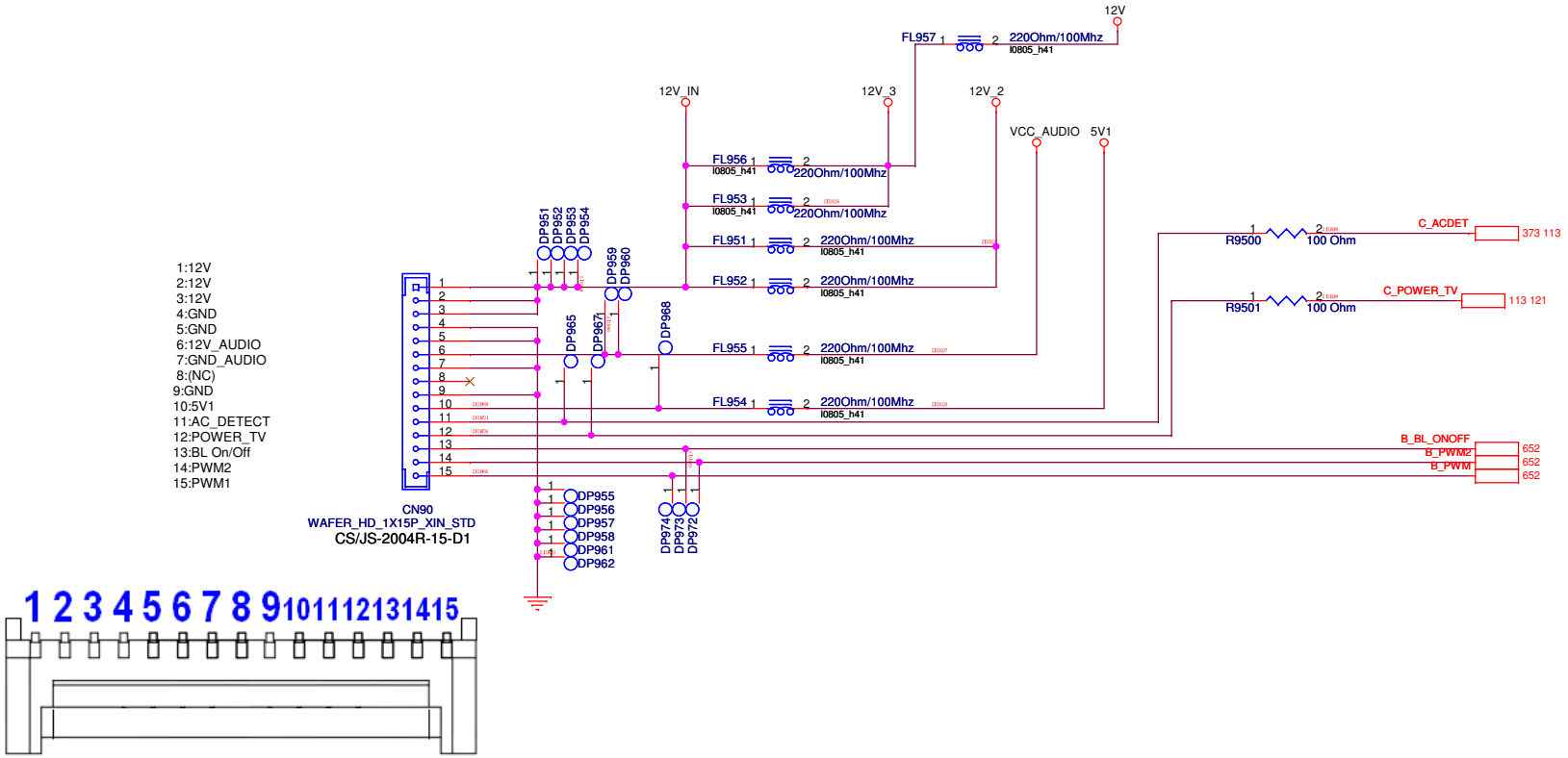

Unihan	Title : 950. POWER CONNECTOR		
MAIN BOARD	Engineer: CVP DM HW		
Size Custom	Project Name EU Lv.2		Rev 1.00
Date: Tuesday, January 29, 2013	Sheet 950 of 76		

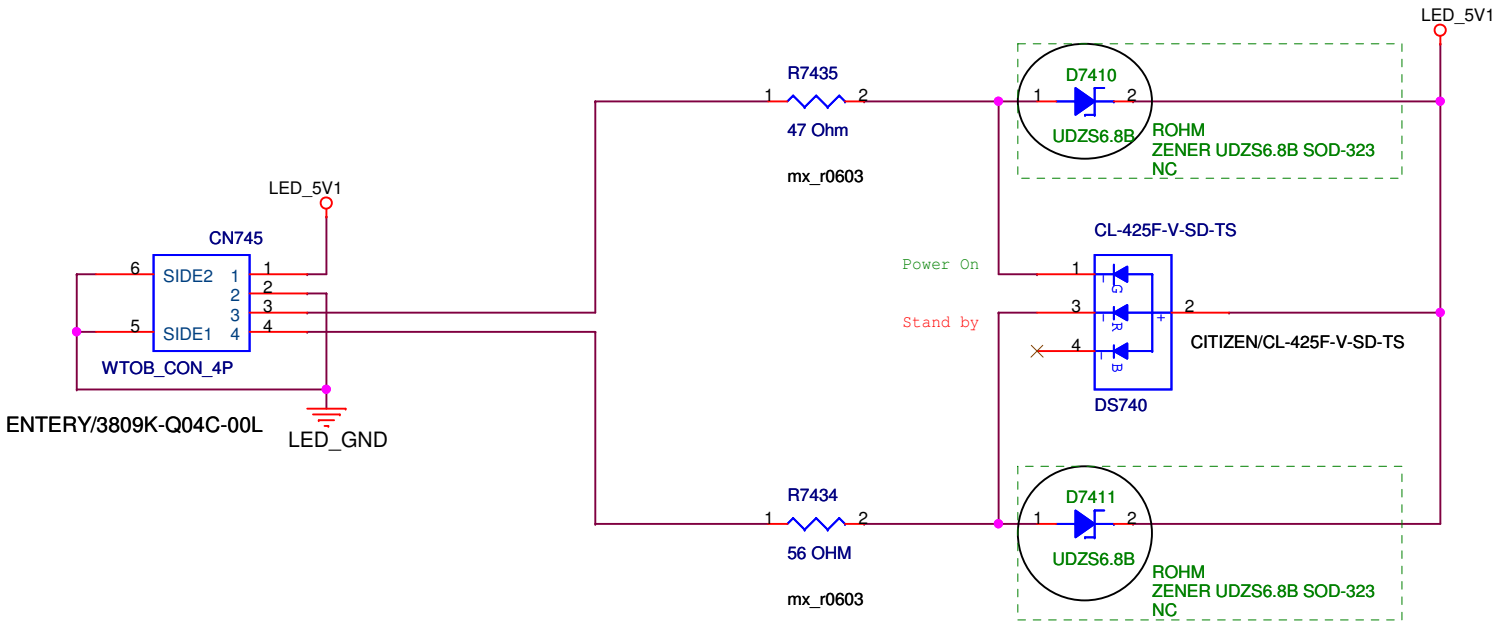

Unihan	Title : 2013EU_LV2_RINGLED		
MAIN BOARD	Engineer: CVP DM HW		
Size A4	Project Name EU Lv.2		Rev 1.00
Date: Tuesday, January 29, 2013	Sheet 951 of 76		