230B8QJEB/00

Service
Service
Service

Service Manual

Description	Page
Table of Contents	1
Revision List	2
Important Safety Notice	3
1. Monitor Specifications	5
2. LCD Monitor Description	8
3. Operation Instructions	9
3.1 General Instructions	9
3.2 Control Buttons	9
3.3 OSD Menu	10
4. Input/output Specification	11
4.1 Input Signal Connector	11
5. Schematic Diagram	16
5.1 Scaler Board	16
5.2 Power Board	22
6. PCB Layout	27
6.1 Scaler Board	27
6.2 Key Board	27
6.3 Power Board	28
7. Wiring Diagram	29
8. Scaler Board Overview	30
9. Mechanical Instructions	31
10 Repair Flow Chart	32
11. ISP Instructions	34
12. DDC Instructions	43
13. White Balance, Luminance Adjustment	56
14. Monitor Exploded View	57
15.Recommended&SparePartsList	58
16.Different Parts List	59
17.General Product Specification	60

SAFETY NOTICE

ANY PERSON ATTEMPTING TO SERVICE THIS CHASSIS MUST FAMILIARIZE HIMSELF WITH THE CHASSIS AND BE AWARE OF THE NECESSARY SAFETY PRECAUTIONS TO BE USED WHEN SERVICING ELECTRONIC EQUIPMENT CONTAINING HIGH VOLTAGES.

CAUTION: USE A SEPARATE ISOLATION TRANSFOMER FOR THIS UNIT WHEN SERVICING

REFER TO BACK COVER FOR IMPORTANT SAFETY GUIDELINES

Copyright 2012 Philips Consumer Lifestyle Subject to modification Ⓚ Jun.27, 2012

飛利浦 PHILIPS

Revision List

Version	Release Date	Revision History
A00	MAR-10-2020	Initial release, Draft Version，increase model 230B8QJEB/00

Important Safety Notice

This electronic user guide is intended for anyone who uses the Philips monitor. Take time to read this user manual before you use your monitor. It contains important information and notes regarding operating your monitor. The Philips guarantee applies provided the product is handled properly for its intended use, in accordance with its operating instructions and upon presentation of the original invoice or cash receipt, indicating the date of purchase, dealers name and model and production number of the product.

Warnings

Use of controls, adjustments or procedures other than those specified in this documentation may result in exposure to shock, electrical hazards and/or mechanical hazards. Read and follow these instructions when connecting and using your computer monitor.

Operation

Keep the monitor out of direct sunlight and away from stoves or any other heat source.

Remove any object that could fall into ventilation holes or prevent proper cooling of the monitor's electronics.

Do not block the ventilation holes on the cabinet.

When positioning the monitor, make sure the power plug and outlet are easily accessible.

If turning off the monitor by detaching the power cable or DC power cord, wait for 6 seconds before attaching the power cable or DC power cord for normal operation.

Please use approved power cord provided by Philips all the time. If your power cord is missing, please contact with your local service center. (Please refer to Customer Care Consumer Information Center)

Do not subject the monitor to severe vibration or high impact conditions during operation.

Do not knock or drop the monitor during operation or transportation.

Maintenance

To protect your monitor from possible damage, do not put excessive pressure on the LCD panel. When moving your monitor, grasp the frame to lift; do not lift the monitor by placing your hand or fingers on the LCD panel.

Unplug the monitor if you are not going to use it for an extensive period of time.

Unplug the monitor if you need to clean it with a slightly damp cloth. The screen may be wiped with a dry cloth when the power is off. However, never use organic solvent, such as, alcohol, or ammonia-based liquids to clean your monitor.

To avoid the risk of shock or permanent damage to the set, do not expose the monitor to dust, rain, water, or excessive moisture environment.

If your monitor gets wet, wipe it with dry cloth as soon as possible.

If foreign substance or water gets in your monitor, please turn the power off immediately and disconnect the power cord. Then, remove the foreign substance or water, and send it to the maintenance center.

Do not store or use the monitor in locations exposed to heat, direct sunlight or extreme cold.

In order to maintain the best performance of your monitor and use it for a longer lifetime, please use the monitor in a location that falls within the following temperature and humidity ranges.

Temperature: 0-40°C 32-95°F

Humidity: 20-80% RH

IMPORTANT: Always activate a moving screen saver program when you leave your monitor unattended. Always activate a periodic screen refresh application if your monitor will display unchanging static content. Uninterrupted display of still or static images over an extended period may cause “burn in”, also known as “after-imaging” or “ghost imaging”, on your screen. "Burn-in", "after-imaging", or "ghost imaging" is a well-known phenomenon in LCD panel technology. In most cases, the “burned in” or “after-imaging” or “ghost imaging” will disappear gradually over a period of time after the power has been switched off.

Warning

Severe” burn-in” or “after-image” or “ghost image” symptoms will not disappear and cannot be repaired. The damage mentioned above is not covered under your warranty.

Service

The casing cover should be opened only by qualified service personnel.

If there is any need for any document for repair or integration, please contact with your local service center. (Please refer to the chapter of "Consumer Information Center")

For transportation information, please refer to "Technical Specifications".

Do not leave your monitor in a car/trunk under direct sun light.

Note

Consult a service technician if the monitor does not operate normally, or you are not sure what procedure to take when the operating instructions given in this manual have been followed.

1. Monitor Specifications

Picture/Display	
Monitor Panel Type	IPS Technology
Backlight	W-LED
Panel Size	22.5" W (57.2 cm)
Pixel Pitch	0.254(H) mm x 0.248(V) mm
Contrast Ratio (typ.)	1000:1
Optimum Resolution	1920 x 1200 @ 60 Hz
Viewing Angle	178° (H) / 178° (V) @ C/R > 10 (typ.)
Display Colors	16.7M (6 bit+ FRC)
Flicker Free	YES
Picture Enhancement	SmartImage
Vertical Refresh Rate	50 Hz - 76 Hz (Analog) 48 Hz - 76 Hz (HDMI)
Horizontal Frequency	30 kHz - 83 kHz (Analog) 30 kHz - 95 kHz (HDMI)
sRGB	YES
LowBlue Mode	YES
Adaptive Sync	YES
EasyRead	YES
Connectivity	
Signal Input/Output	VGA(Analog), HDMI 1.4(Digital)
Input Signal	Separate Sync, Sync on Green
Audio In/Out	HDMI audio out
Convenience	
User Convenience	/◀ /▼ /▲ /OK
OSD Languages	English, German, Spanish, Greek, French, Italian, Hungarian, Dutch, Portuguese, Brazil Portuguese, Polish, Russian, Swedish, Finnish, Turkish, Czech, Ukranian, Simplified Chinese, Traditional Chinese, Japanese, Korean
Other Convenience	VESA mount (100x100mm), Kensington Lock
Plug & Play Compatibility	DDC/CI, sRGB, Windows 10/8.1/8/7, Mac OS X
Stand	
Height adjustment	130mm
Pivot	-90 / +90 degree
Swivel	-175 / +175 degree
Tilt	-5 / +30 degree

Power			
Consumption	AC Input Voltage at 100VAC , 50Hz	AC Input Voltage at 115VAC , 50Hz	AC Input Voltage at 230VAC, 50Hz
Normal Operation	20.78 W (typ.)	20.26 W (typ.)	21.40 W (typ.)
Sleep (Standby)	<0.3 W	<0.3 W	<0.3 W
Off	<0.3 W	<0.3 W	<0.3 W
Heat Dissipation*	AC Input Voltage at 100VAC , 50Hz	AC Input Voltage at 115VAC , 50Hz	AC Input Voltage at 230VAC , 50Hz
Normal Operation	70.92 BTU/hr (typ.)	69.16 BTU/hr (typ.)	73.04 BTU/hr (typ.)
Sleep (Standby)	<1.02 BTU/hr	<1.02 BTU/hr	<1.02 BTU/hr
Off	<1.02 BTU/hr	<1.02 BTU/hr	<1.02 BTU/hr
On Mode(ECO mode)	9.4W (typ.)		
Power LED indicator	On mode: White, Standby/Sleep mode: White (blinking)		
Power Supply	Built-in, 100-240V AC, 50-60Hz		

Dimensions	
Product with stand (WxHxD)	499 x 492 x 216 mm
Product without stand (WxHxD)	499 x 323 x 56 mm
Product with packaging (WxHxD)	565 x 519 x 161 mm
Weight	
Product with stand	4.12 kg
Product without stand	2.52 kg
Product with packaging	5.91 kg

Operating Condition	
Temperature range (operation)	0°C to 40 °C
Relative humidity (operation)	20% to 80%
Atmospheric pressure (operation)	700 to 1060hPa
Temperature range (Non-operation)	-20°C to 60°C
Relative humidity (Non-operation)	10% to 90%
Atmospheric pressure (Non-operation)	500 to 1060hPa

Environmental and energy	
ROHS	YES
EPEAT	YES (Refer to note 1 for more details)
Packaging	100% recyclable
Specific Substances	100% PVC BFR free housing
EnergyStar	YES
Compliance and standards	
Regulatory Approvals	CCC, CECP, CEL
Cabinet	
Color	Black
Finish	Texture

Note:

1. EPEAT Gold or Silver is valid only where Philips registers the product. Please visit www.epeat.net for registration status in your country.
2. This data is subject to change without notice. Go to www.philips.com/support to download the latest version of leaflet.

2. LCD Monitor Description

The LCD monitor will contain a scaler board, a key board and a power board. The scaler board houses the flat panel control logic, brightness control logic and DDC.

The power board will provide AC to DC inverter voltage to drive the backlight of panel and the scaler board chips each voltage.

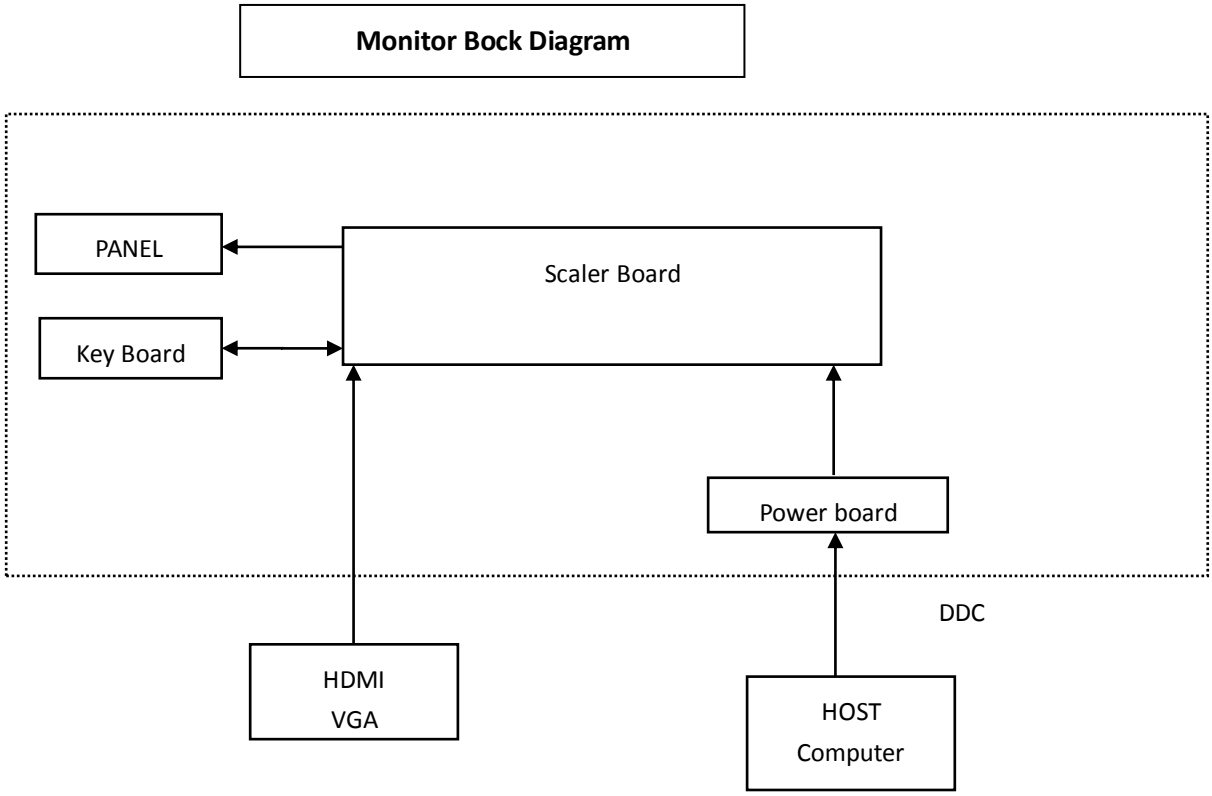

3. Operating Instructions

1 Description of the control buttons

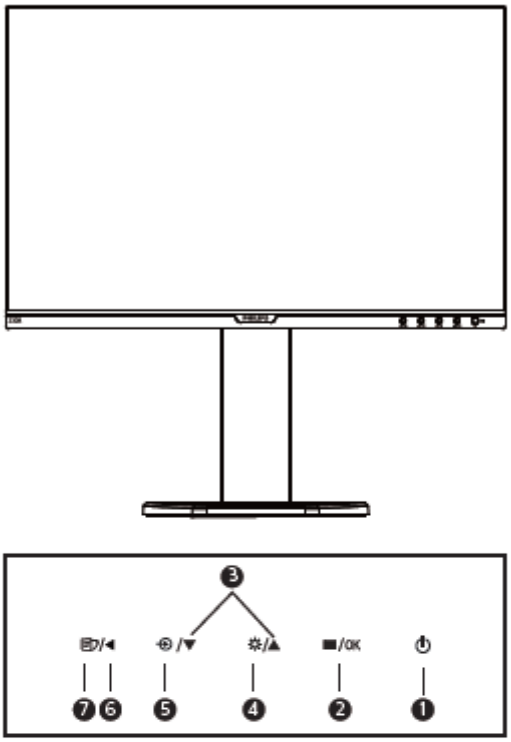

❶	⏻	Switch monitor's power ON and OFF.
❷	/OK	Access the OSD menu. Confirm the OSD adjustment.
❸	▲▼	Adjust the OSD menu.
❹	☼	Adjust the brightness level.
❺	⊕	Change the signal input source.
❻	◀	Return to previous OSD level.
❼		SmartImage. There are multiple selections: EasyRead, Office, Photo, Movie, Game, Economy, LowBlue Mode, Off.

2 Description of the On Screen Display

What is On-Screen Display (OSD)?

On-Screen Display (OSD) is a feature in all Philips LCD monitors. It allows an end user to adjust screen performance or select functions of the monitors directly through an on-screen instruction window. A user friendly on screen display interface is shown as below:

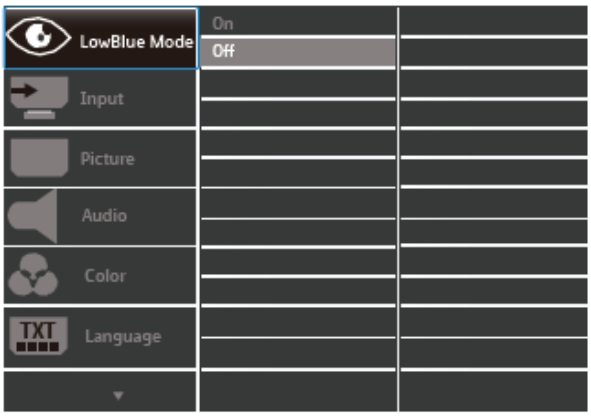

Basic and simple instruction on the control keys

In the OSD shown above, you can press ▼▲ buttons at the front bezel of the monitor to move the cursor, and press OK button to confirm the choice or change.

The OSD Menu

Below is an overall view of the structure of the On-Screen Display. You can use this as a reference when you want to work your way around the different adjustments later on.

Main menu	Sub menu	
LowBlue Mode	On	1, 2, 3, 4
	Off	
Input	VGA	
	HDMI 1.4	
Picture	Picture Format	Wide Screen, 4:3
	Brightness	0~100
	Contrast	0~100
	Sharpness	0~100
	SmartResponse	Off, Fast, Faster, Fastest
	SmartContrast	On, Off
	Gamma	1.8, 2.0, 2.2, 2.4, 2.6
	Over Scan	On, Off
Audio	Volume	0~100
	Mute	On, Off
Color	Color Temperature	Native, 5000K, 6500K, 7500K, 8200K, 9300K, 11500K
	sRGB	
	User Define	Red: 0~100
		Green: 0~100
		Blue: 0~100
Language	English, Deutsch, Español, Ελληνική, Français, Italiano, Maryar, Nederlands, Português, Português do Brazil, Polski , Русский, Svenska, Suomi, Türkçe, Čeština, Українська, 简体中文, 繁體中文, 日本語, 한국어	
OSD Settings	Horizontal	0~100
	Vertical	0~100
	Transparency	Off, 1, 2, 3, 4
	OSD Time Out	5s, 10s, 20s, 30s, 60s
Setup	Auto	
	H.Position	0~100
	V.Position	0~100
	Phase	0~100
	Clock	0~100
	Resolution Notification	On, Off
	Reset	Yes, No
	Information	

3 Resolution notification

This monitor is designed for optimal performance at its native resolution, 1920 × 1200 @ 60 Hz. When the monitor is powered on at a different resolution, an alert is displayed on screen: Use 1920 × 1200 @ 60 Hz for best results.

Display of the native resolution alert can be switched off from Setup in the OSD (On Screen Display) menu.

4 Physical Function

Tilt

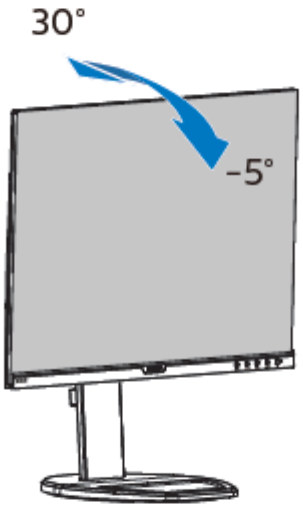

Swivel

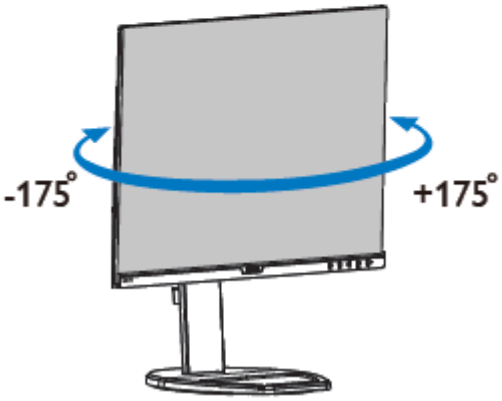

Height adjustment

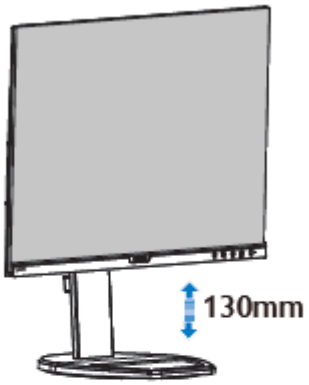

Pivot

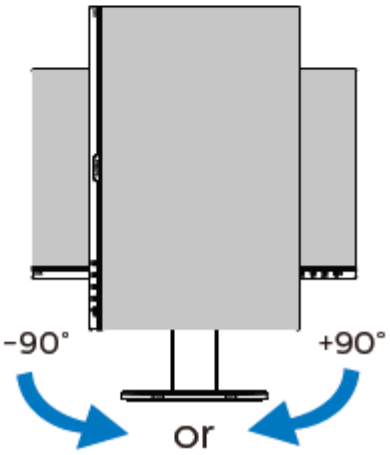

4. Input/Output Specification

4.1 Input Signal Connector

Analog Connectors

Pin No.	Signal Name	Pin No.	Signal Name
1	Red	9	DDC +3.3V or +5V
2	Green/ SOG	10	Logic GND
3	Blue	11	Sense (GND)
4	Sense (GND)	12	Bi-directional data
5	Cable Detect (GND)	13	H/H+V sync
6	Red GND	14	V-sync
7	Green GND	15	Data clock
8	Blue GND		

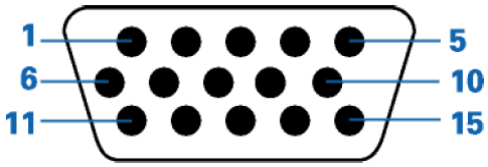

DVI onnectors (Option)

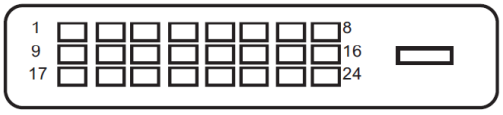

Pin Number	24-Pin Color Display Signal Cable	Pin Number	24-Pin Color Display Signal Cable
1	TMDS data 2－	13	TMDS data 3＋
2	TMDS data 2＋	14	＋5V Power
3	TMDS data 2/4 Shield	15	Ground (for+5V)
4	TMDS data 4－	16	Hot Plug Detect
5	TMDS data 4＋	17	TMDS data 0－
6	DDC Clock	18	TMDS data 0＋
7	DDC Data	19	TMDS data 0/5 Shield
8	N.C.	20	TMDS data 5－
9	TMDS data 1－	21	TMDS data 5＋
10	TMDS data 1＋	22	TMDS Clock Shield
11	TMDS data 1/3 Shield	23	TMDS Clock +
12	TMDS data 3－	24	TMDS Clock －

HDMI Connectors (Option)

Pin No.	Signal Name	Pin No.	Signal Name
1	TMDS Data2+	11	TMDS Clock Shield
2	TMDS Data2 Shield	12	TMDS Clock–
3	TMDS Data2–	13	CEC
4	TMDS Data1+	14	Reserved (HDMI 1.0-1.3c), HEC Data- (Optional, HDMI 1.4+ with Ethernet)
5	TMDS Data1 Shield	15	SCL (I²C Serial Clock for DDC)
6	TMDS Data1–	16	SDA (I²C Serial Data Line for DDC)
7	TMDS Data0+	17	DDC/CEC/HEC Ground
8	TMDS Data0 Shield	18	+5 V Power (max 50 mA)
9	TMDS Data0–	19	Hot Plug Detect (All versions) and HEC Data+ (Optional, HDMI 1.4+ with Ethernet)
10	TMDS Clock+	20	

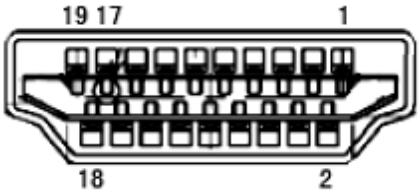

(Option)

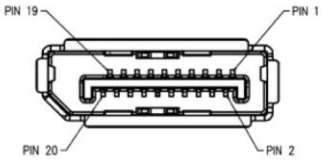

PIN	MNEMONIC	SIGNAL
1	ML Lane 3 (n)	Lane 3 -
2	GND	Ground
3	ML Lane 3 (p)	Lane 3 +
4	ML Lane 2 (n)	Lane 2 -
5	GND	Ground
6	ML Lane 2 (p)	Lane 2 +
7	ML Lane 1 (n)	Lane 1 -
8	GND	Ground
9	ML Lane 1 (p)	Lane 1 p
10	ML Lane 0 (n)	Lane 0 -
11	GND	Ground
12	ML Lane 0 (p)	Lane 0 +
13	GND	Ground
14	GND	Ground
15	AUX CH (p)	Aux Channel +
16	GND	Ground
17	AUX CH (n)	Aux Channel -
18	HPD	Hot Plug Detect
19	Return	Return
20	DP PWR	Source Power In

5.1 Resolution & Preset Modes

1 Maximum Resolution

1920 x 1200 @ 60 Hz (analog input)
1920 x 1200 @ 75 Hz (digital input)

2 Recommended Resolution

1920 x 1200 @ 60 Hz

H. freq (kHz)	Resolution	V. freq (Hz)
31.47	720 x 400	70.09
31.47	640 x 480	59.94
35.00	640 x 480	66.67
37.86	640 x 480	72.81
37.50	640 x 480	75.00
37.88	800 x 600	60.32
46.88	800 x 600	75.00
48.36	1024 x 768	60.00
60.02	1024 x 768	75.03
44.77	1280 x 720	59.86
63.89	1280 x 1024	60.02
79.98	1280 x 1024	75.03
55.94	1440 x 900	59.89
70.64	1440 x 900	74.98
65.29	1680 x 1050	59.95
67.50	1920 x 1080	60.00
74.04	1920 x 1200	59.95
93.10	1920 x 1200	74.94

Note

Please notice that your display works best at native resolution of 1920 x 1200 @ 60Hz. For best display quality,please follow this resolution recommendation.

4.2 Philips' Flat Panel Monitors Pixel

Philips strives to deliver the highest quality products. We use some of the industry's most advanced manufacturing processes and practice stringent quality control. However, pixel or sub pixel defects on the TFT Monitor panels used in flat panel monitors are sometimes unavoidable. No manufacturer can guarantee that all panels will be free from pixel defects, but Philips guarantees that any monitor with an unacceptable number of defects will be repaired or replaced under warranty. This notice explains the different types of pixel defects and defines acceptable defect levels for each type. In order to qualify for repair or replacement under warranty, the number of pixel defects on a TFT Monitor panel must exceed these acceptable levels. For example, no more than 0.0004% of the sub pixels on a monitor may be defective. Furthermore, Philips sets even higher quality standards for certain types or combinations of pixel defects that are more noticeable than others. This policy is valid worldwide.

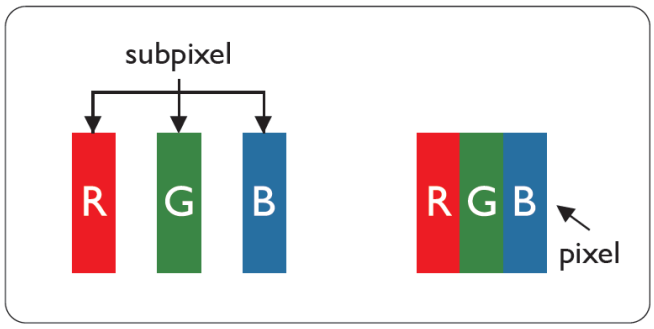

Pixels and Sub pixels

A pixel, or picture element, is composed of three sub pixels in the primary colors of red, green and blue. Many pixels together form an image. When all sub pixels of a pixel are lit, the three colored sub pixels together appear as a single white pixel. When all are dark, the three colored sub pixels together appear as a single black pixel. Other combinations of lit and dark sub pixels appear as single pixels of other colors.

Types of Pixel Defects

Pixel and sub pixel defects appear on the screen in different ways. There are two categories of pixel defects and several types of sub pixel defects within each category.

Bright Dot Defects

Bright dot defects appear as pixels or sub pixels that are always lit or 'on'. That is, a bright dot is a sub-pixel that stands out on the screen when the monitor displays a dark pattern. There are the types of bright dot defects.

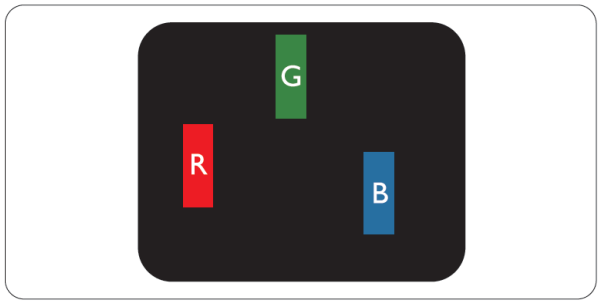

One lit red, green or blue sub pixel.

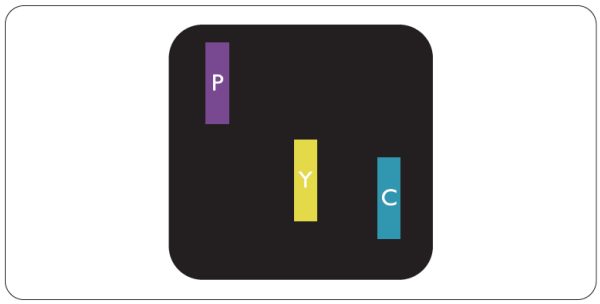

Two adjacent lit sub pixels:

- Red + Blue = Purple
- Red + Green = Yellow
- Green + Blue = Cyan (Light Blue)

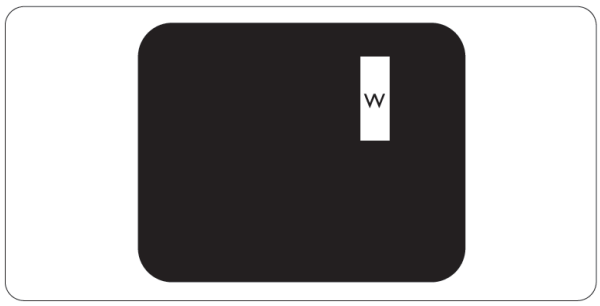

Three adjacent lit sub pixels (one white pixel).

Note
A red or blue bright dot must be more than 50 percent brighter than neighboring dots while a green bright dot is 30 percent brighter than neighboring dots.

Black Dot Defects

Black dot defects appear as pixels or sub pixels that are always dark or 'off'. That is, a dark dot is a sub-pixel that stands out on the screen when the monitor displays a light pattern. These are the types of black dot defects.

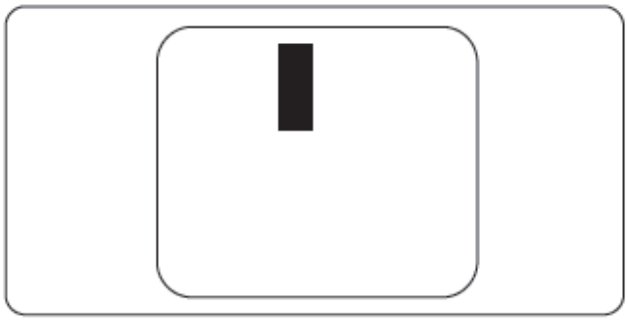

Proximity of Pixel Defects

Because pixel and sub pixels defects of the same type that are near to one another may be more noticeable, Philips also specifies tolerances for the proximity of pixel defects.

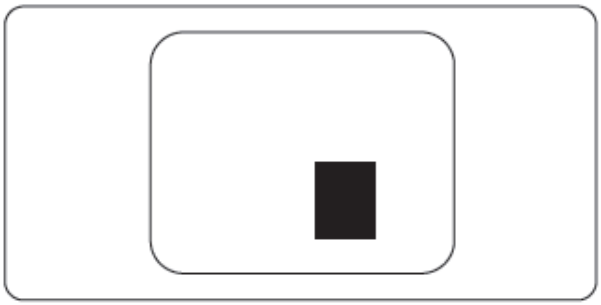

Pixel Defect Tolerances

In order to qualify for repair or replacement due to pixel defects during the warranty period, a TFT Monitor panel in a Philips flat panel monitor must have pixel or sub pixel defects exceeding the tolerances listed in the following tables.

BRIGHT DOT DEFECTS	ACCEPTABLE LEVEL
1 lit subpixel	2
2 adjacent lit subpixels	1
3 adjacent lit subpixels (one white pixel)	0
Distance between two bright dot defects*	>15mm
Total bright dot defects of all types	3

BLACK DOT DEFECTS	ACCEPTABLE LEVEL
1 dark subpixel	5 or fewer
2 adjacent dark subpixels	2 or fewer
3 adjacent dark subpixels	0
Distance between two black dot defects*	>15mm
Total black dot defects of all types	5 or fewer

TOTAL DOT DEFECTS	ACCEPTABLE LEVEL
Total bright or black dot defects of all types	5 or fewer

Note
1 or 2 adjacent sub pixel defects = 1 dot defect

5. Schematic

5.1 Scaler Board (715G9553M0AB010H4M)

VGA INPUT

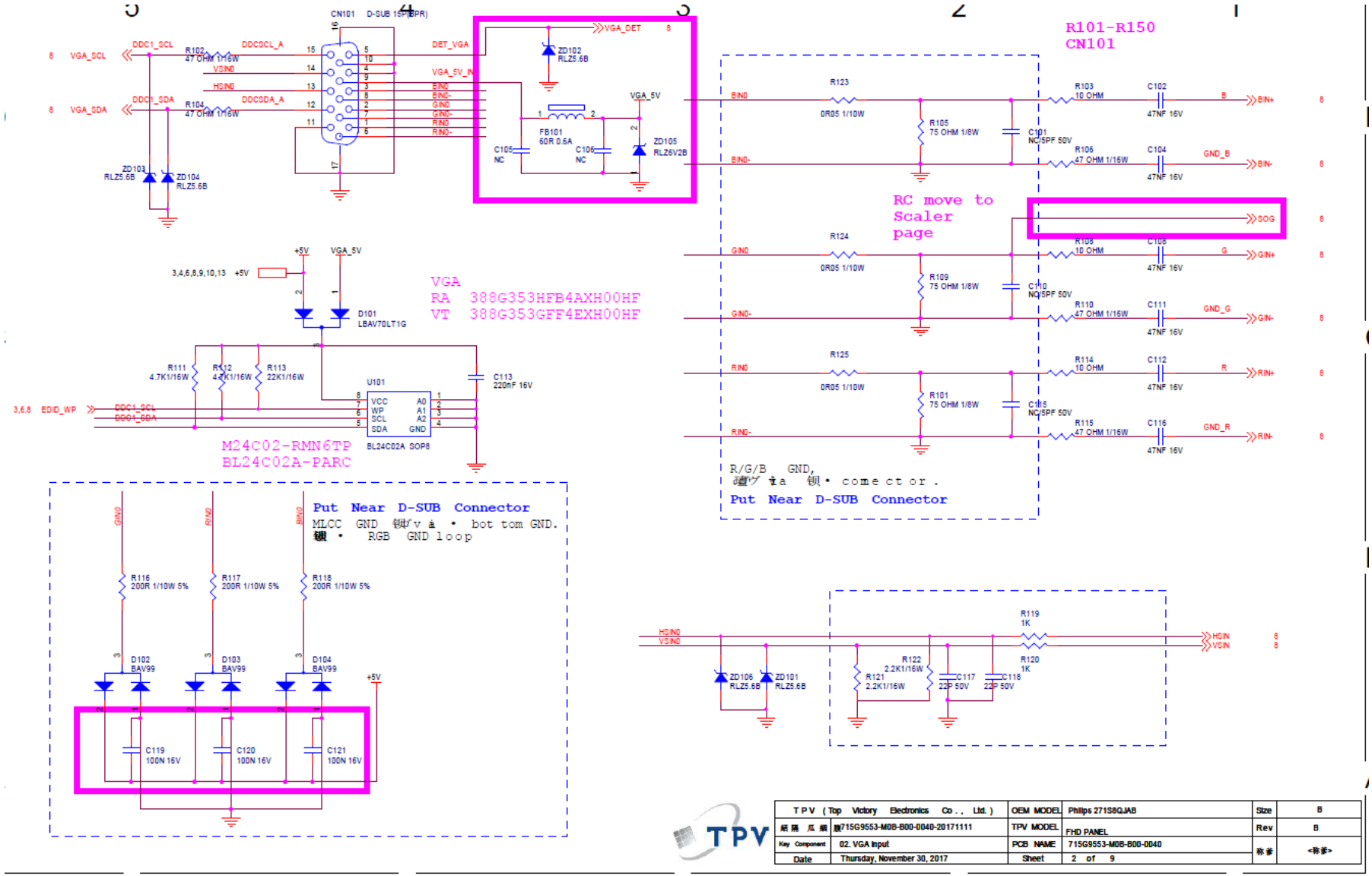

HDMI INPUT

Detect pin	Brand
11	LGE/Acer/MMD
18	ASUS/Dell/HP/Lenovo
11 & 18	LGE(LGE design)

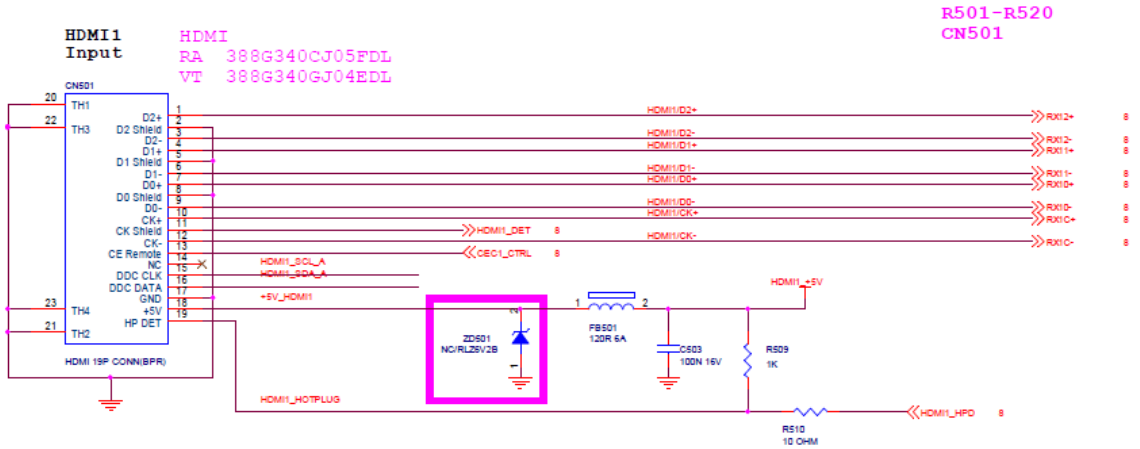

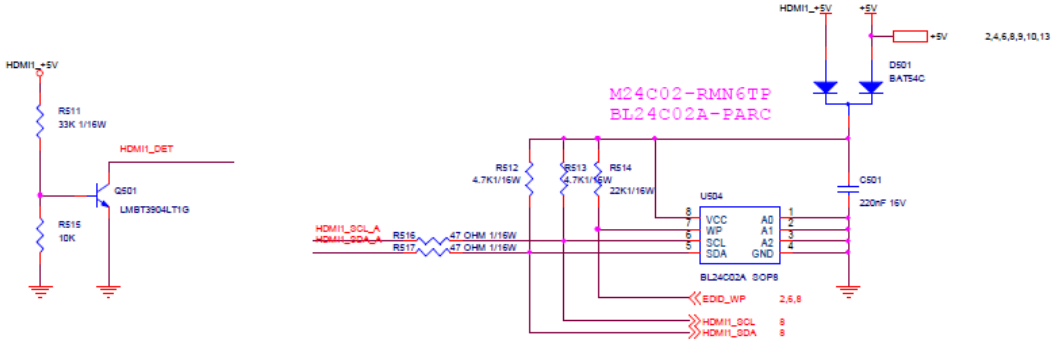

TPV (Top Victory Electronics Co., Ltd.)		OEM MODEL	Philips 271S8QJAB	Size	Custom
結構 瓜鋼	715G9553-M08-B00-0040-20171111	TPV MODEL	FHD PANEL	Rev	B
Key Component	03. HDMI1 Input	PCB NAME	715G9553-M08-B00-0040	修改	<修改>

DPI INPUT

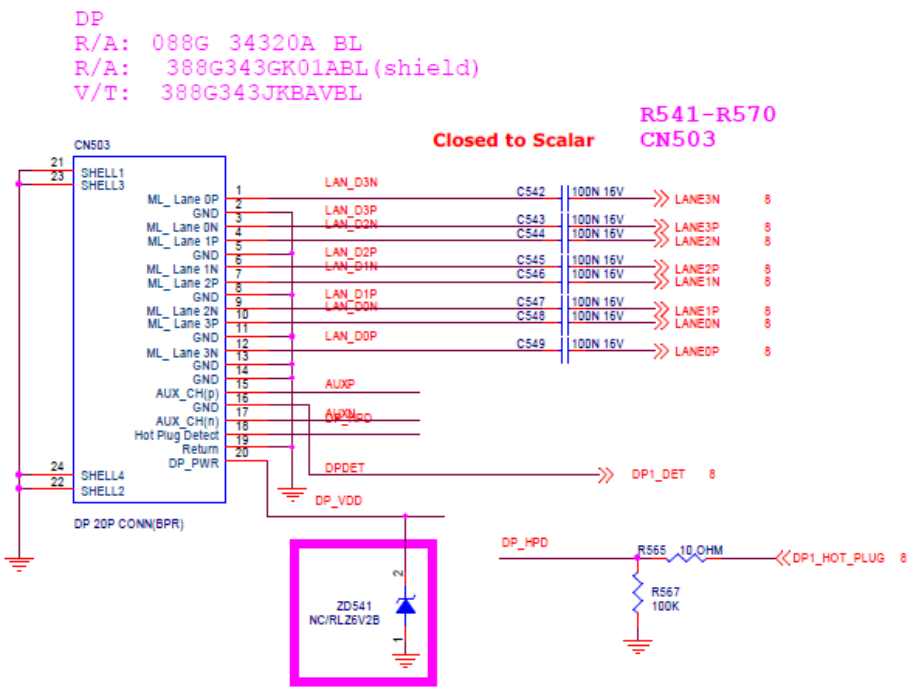

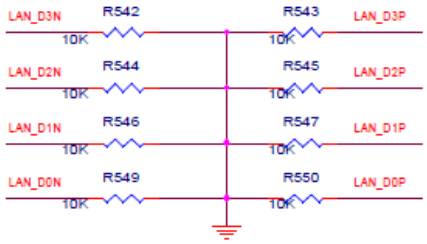

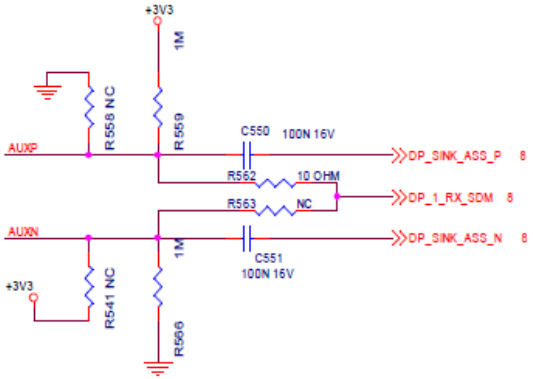

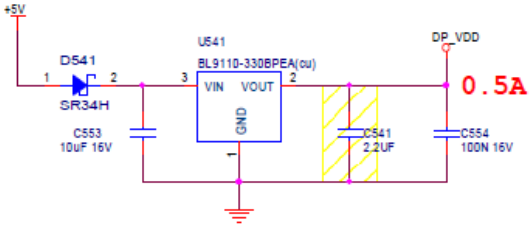

TPV (Top Victory Electronics Co., Ltd.)		OEM MODEL	Philips 271S8QJAB	Size	Custom
結構 儿 組	715G9553-M0B-B00-0040-20171111	TPV MODEL	FHD PANEL	Rev	B
Key Component	04 DP1 Input (MST)	PCB NAME	715G9553-M0B-B00-0040	称番	<称番>
Date	Thursday, November 30, 2017	Sheet	4 of 9		

DVI INPUT

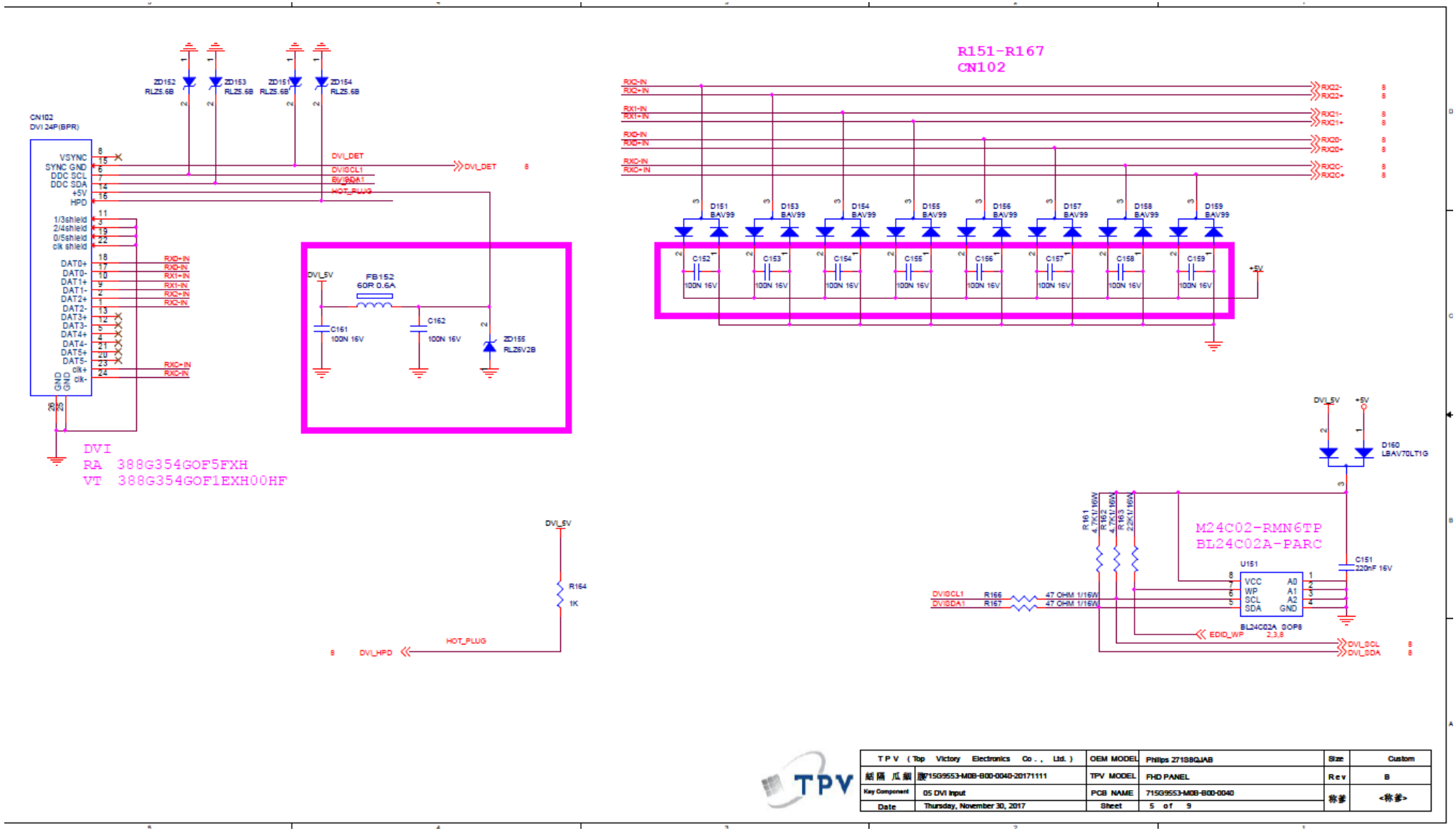
R151-R167
CN102
CN102
DVI 24P(BPR)
DVI
RA 388G354GOF5FXH
VT 388G354GOF1EXH00HF
M24C02-RMN6TP
BL24C02A-PARC
U151
BL24C02A SOP8
D160
LBAV70LT1G
TPV
Philips 271S8QJAB
FHD PANEL
715G9553-M0B-B00-0040
05 DVI Input
Thursday, November 30, 2017
5 of 9
Custom
B

SCALER (TSUMOP38CDT9-1)

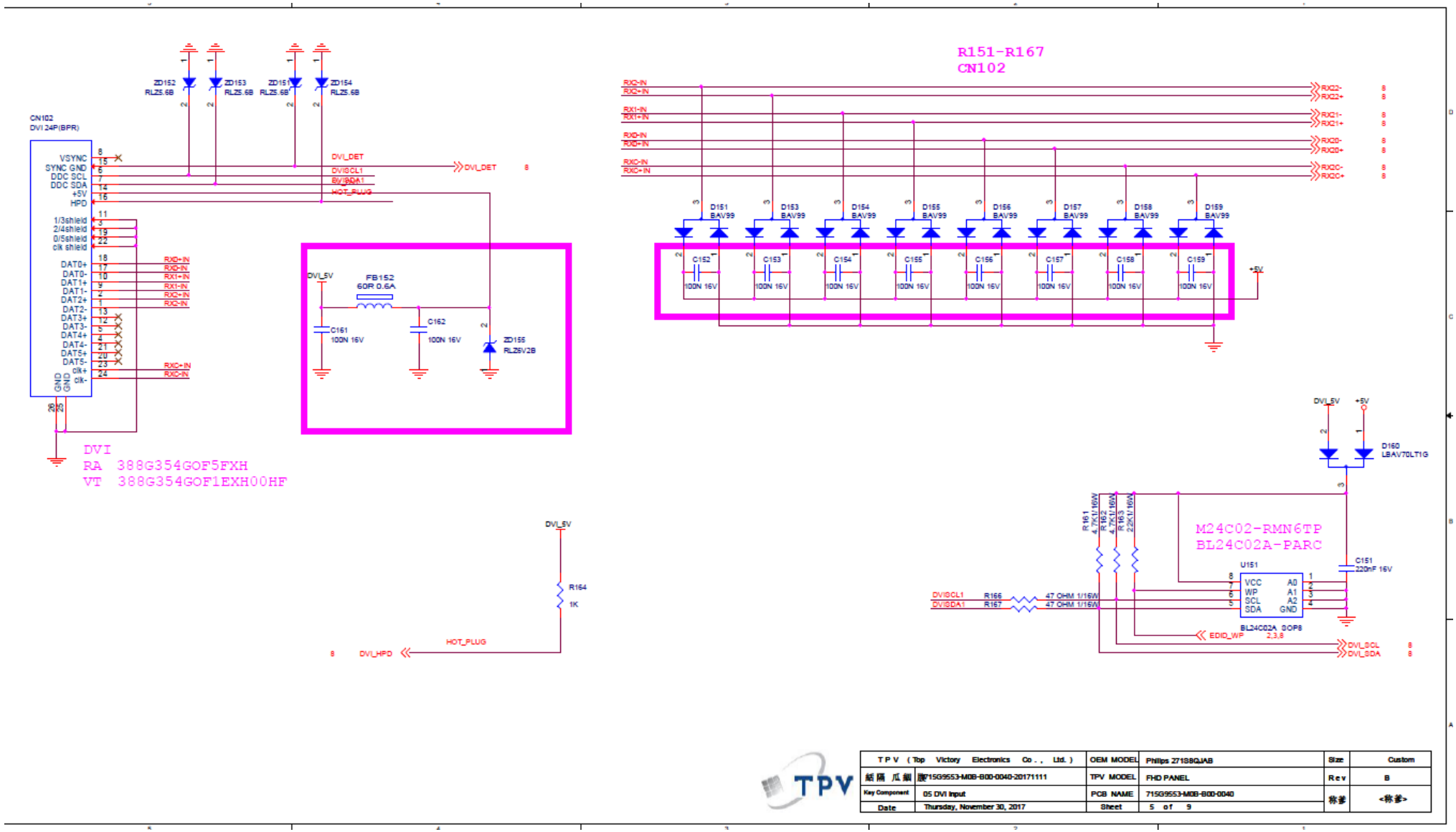

Panel

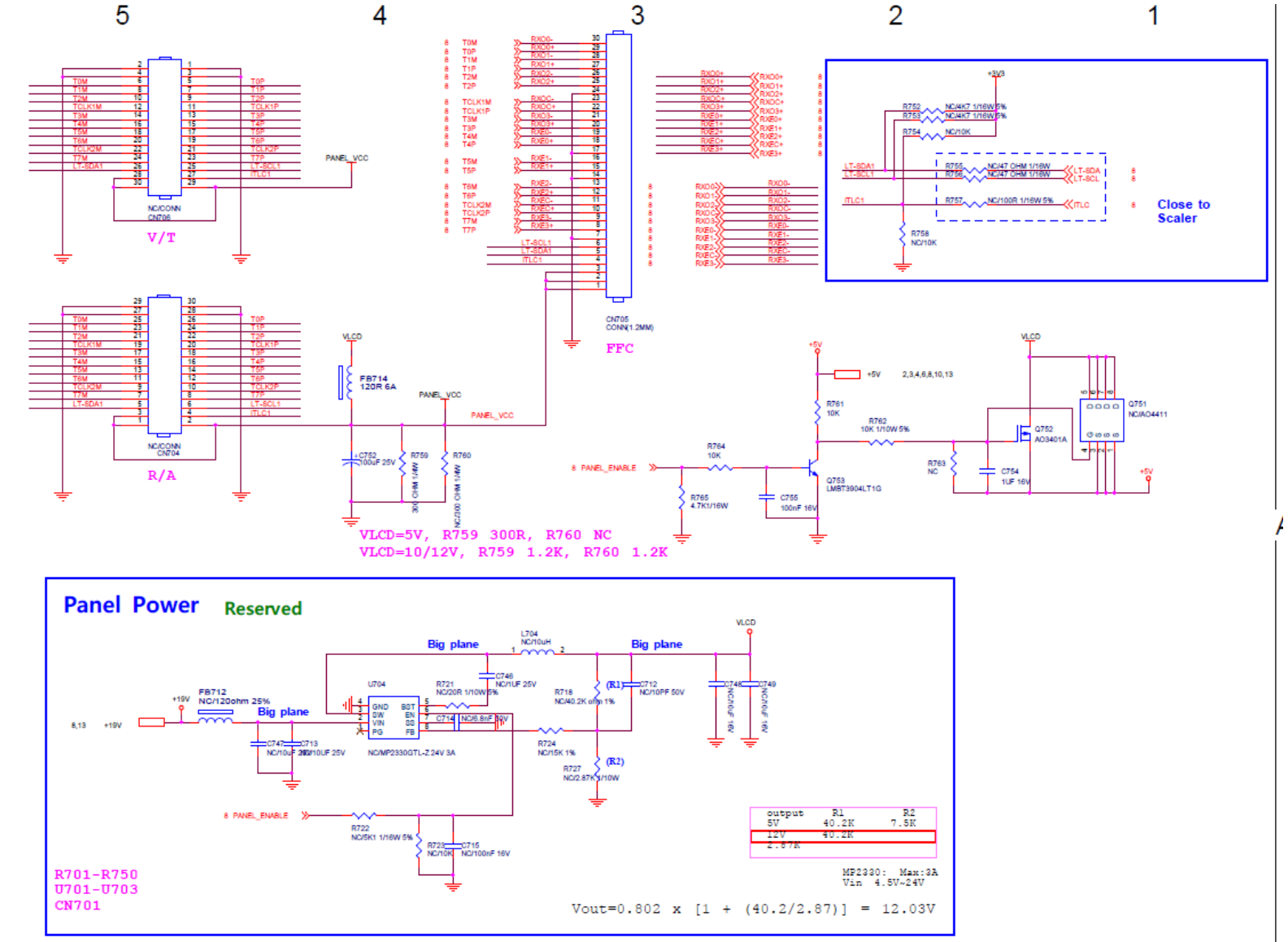

T P V (Top Victory Electronics Co., Ltd.)		OEM MODEL	Philips 271S8QJAB	Size	Custom
板號 / 版本	715G9553-M0B-B00-0040-20171111	TPV MODEL	FHD PANEL	Rev	B
Key Component	07 Panel Output (FHD)	PCB NAME	715G9553-M0B-B00-0040	版本	<版本>
Date	Thursday, November 30, 2017	Sheet	7 of 9		

AUDIO

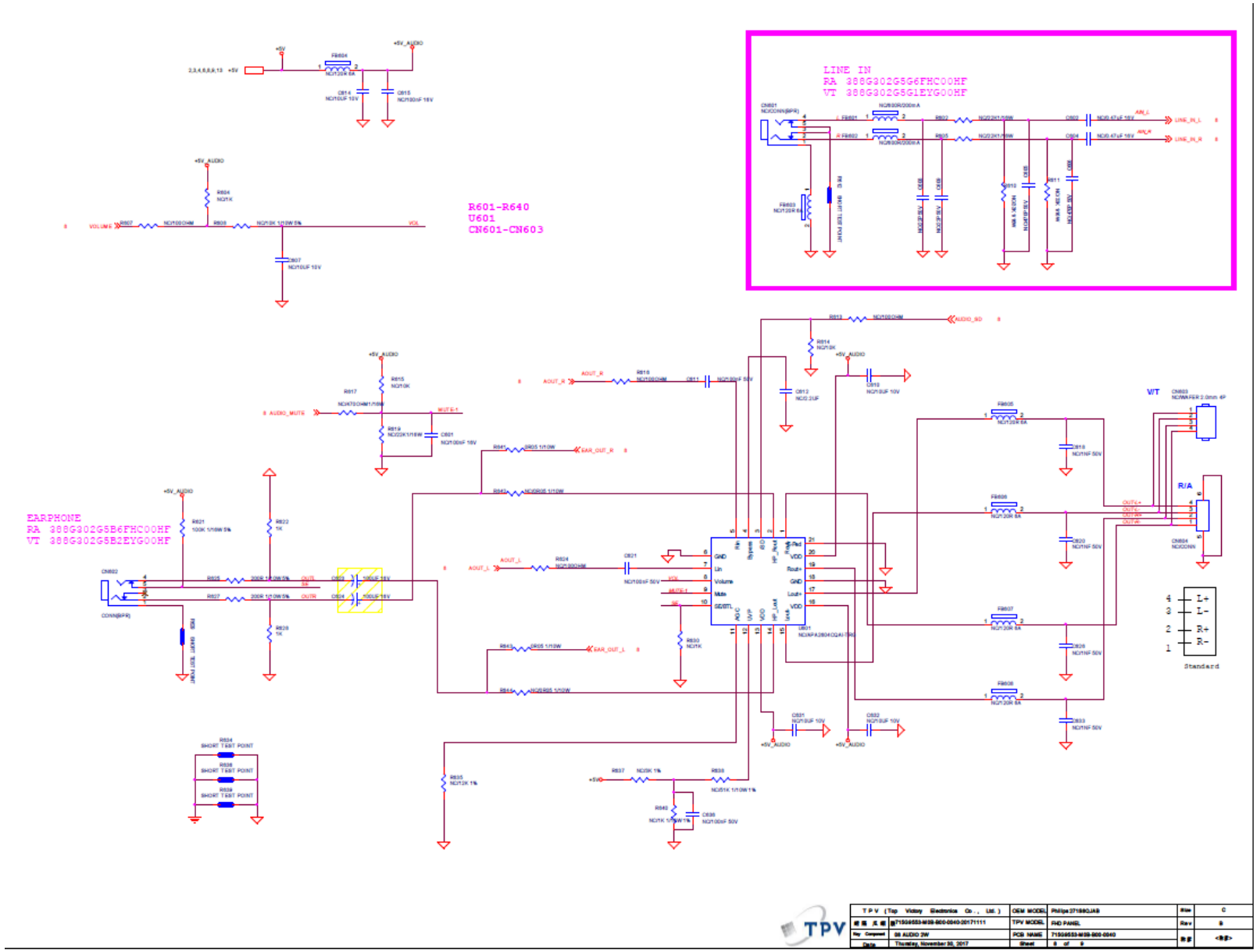
LINE IN
RA 388G302G5G6FHC00HF
VT 388G302G5G1EYG00HF
R601-R640
U601
CN601-CN603
EARPHONE
RA 388G302G5B6FHC00HF
VT 388G302G5B2EYG00HF
V/T
R/A
Standard
TPV

POWER

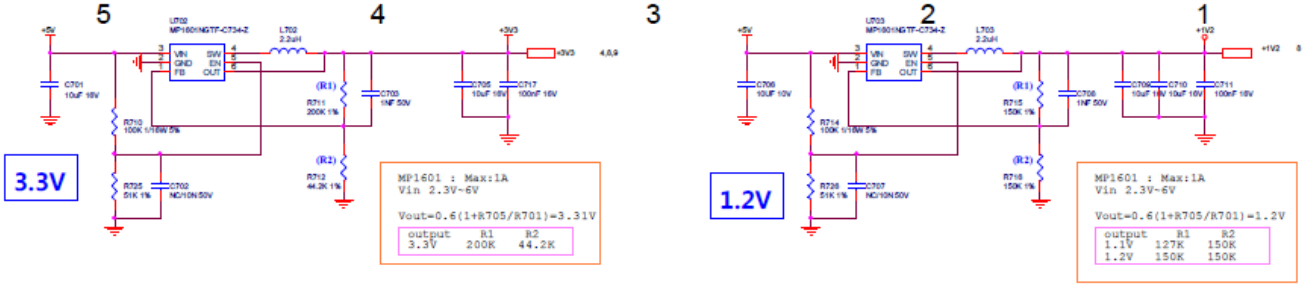

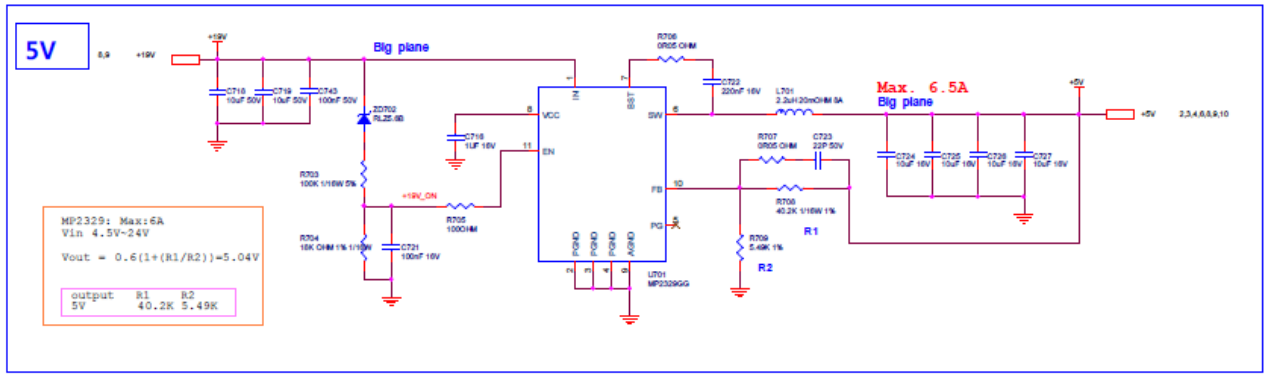

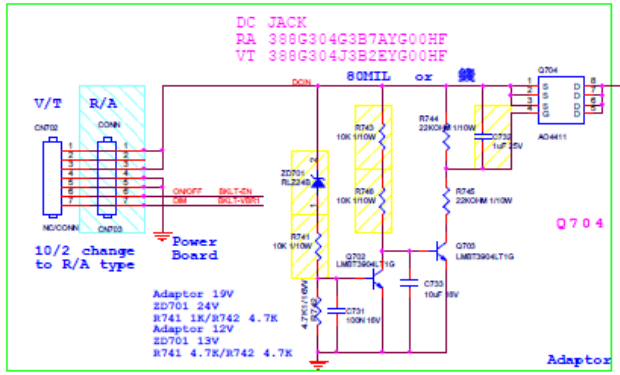

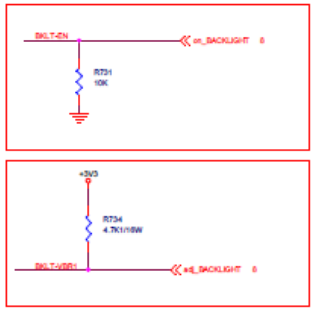

TPV (Top Victory Electronics Co., Ltd.)		OEM MODEL	Philips 271S9QJAB	Size	Custom
機號 / 版本	271S9QJ553-M09-B00-0040-20171111	TPV MODEL	FHD PANEL	Rev	B
Key Component	08 Power (TSUMOP36CDT9-1)	PCB NAME	715G9553-M09-B00-0040	機密	<機密>
Date	Thursday, November 30, 2017	Sheet	9 of 9		

5.2 Power board (715GA977P010000H1S)

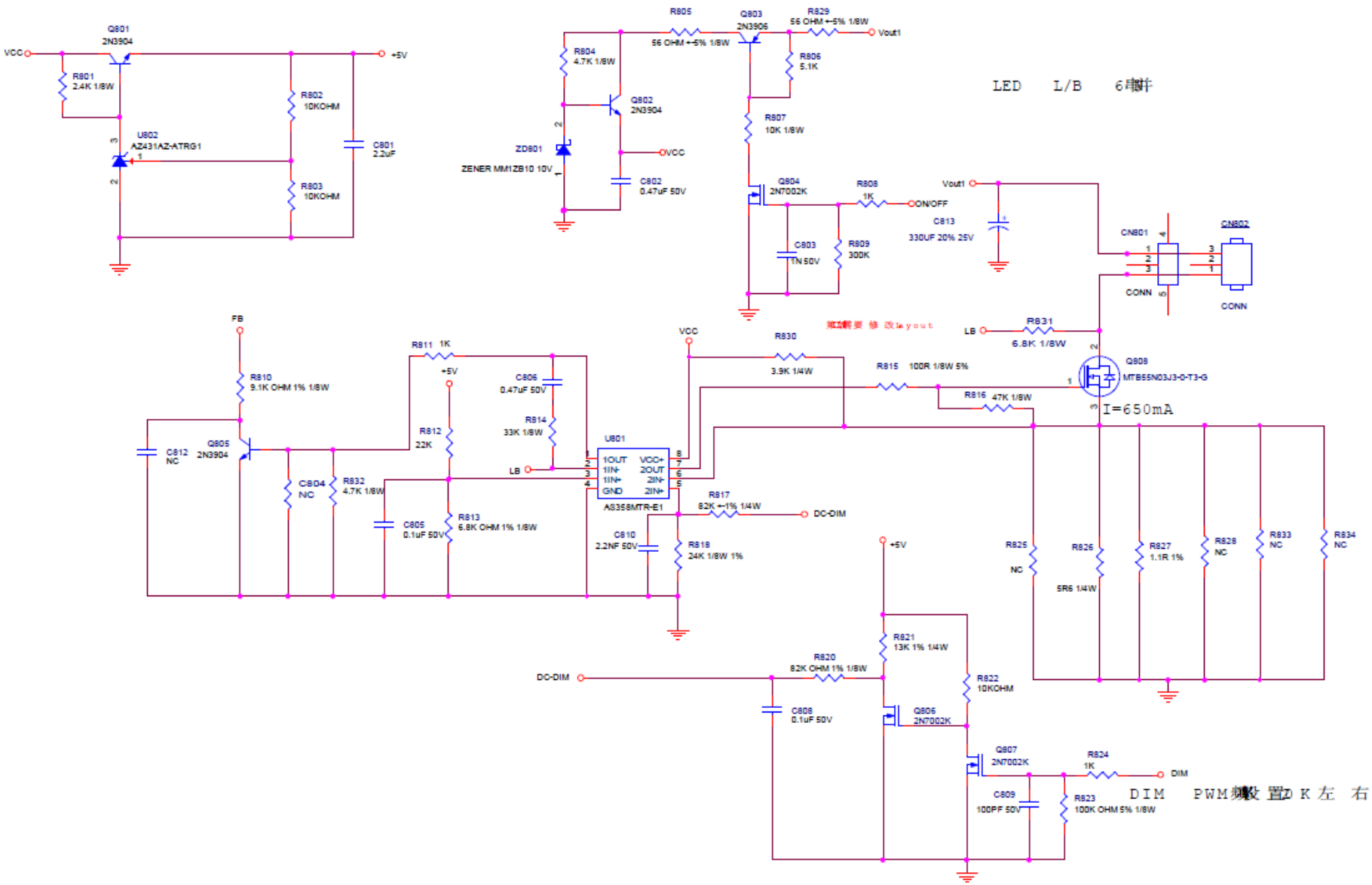

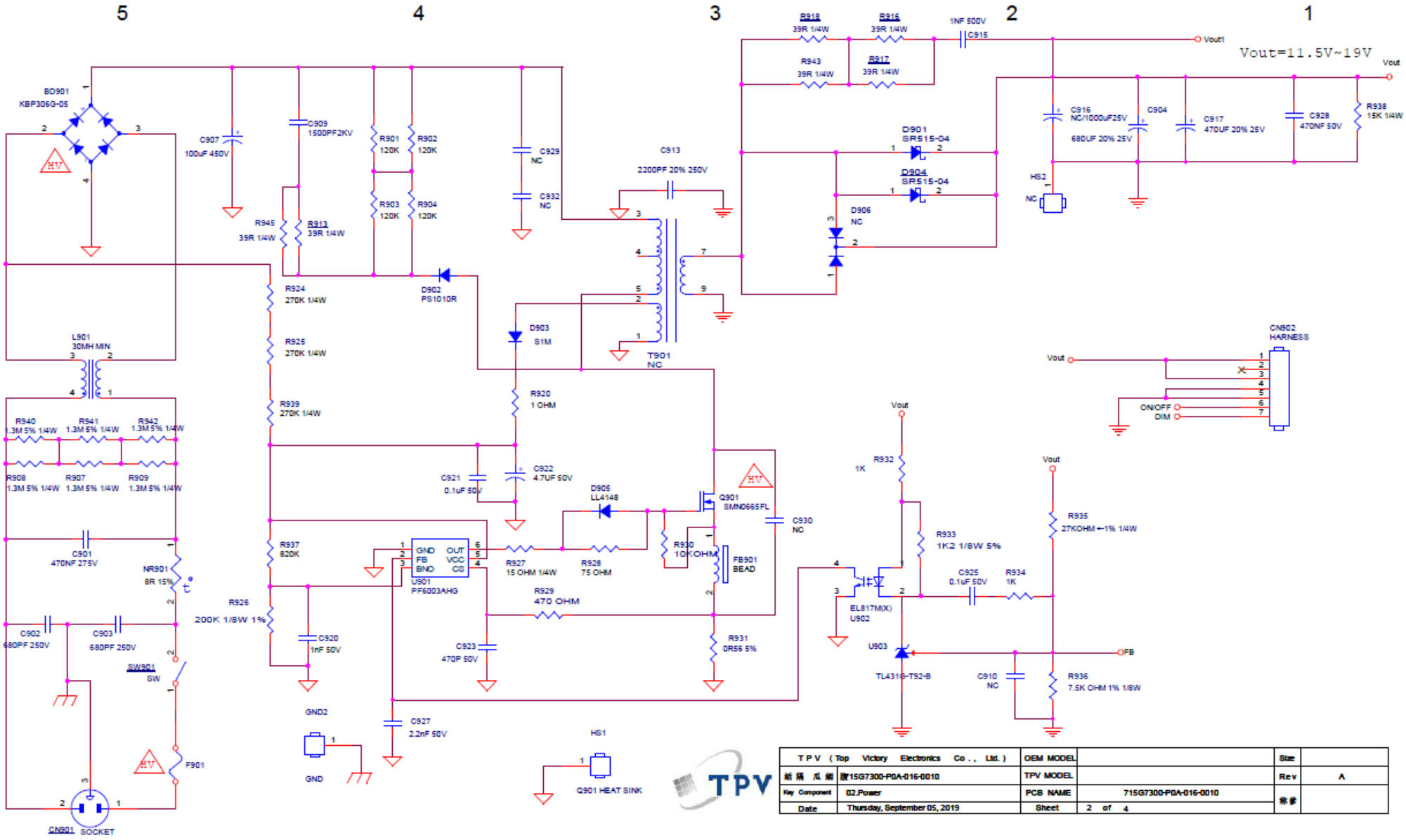

T P V (Top Victory Electronics Co., Ltd.)		OEM MODEL		Size	
結構 瓦組	型15G7300-P0A-016-0010	TPV MODEL		Rev	A
Key Component	02.Power	PCB NAME	715G7300-P0A-016-0010	修改	
Date	Thursday, September 05, 2019	Sheet	2 of 4		

6. PCB LAYOUT

6.1 Scaler Board(715G9553M0AB010H4M)

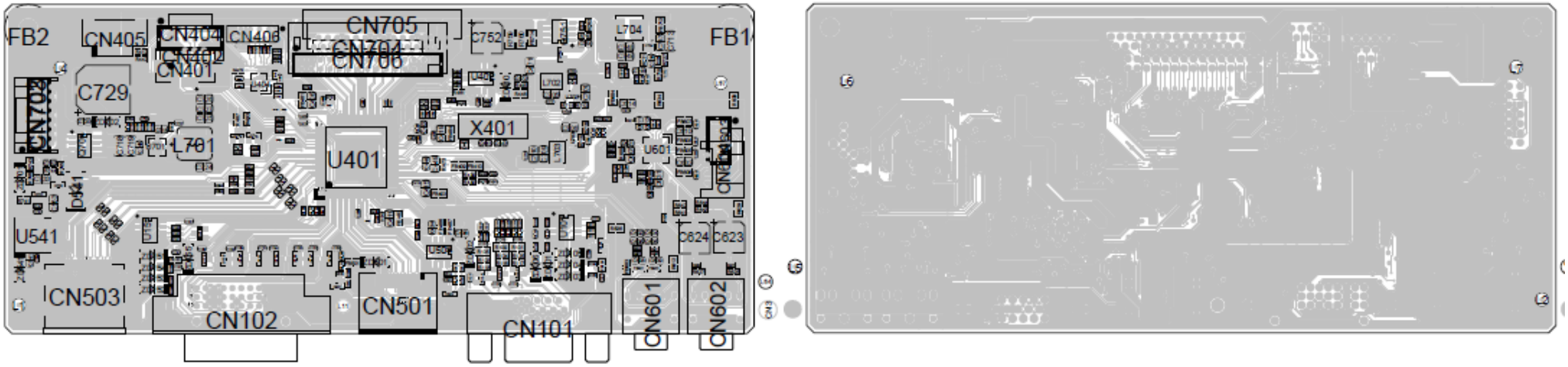

6.2 Key board (715G9511K0A002004F)

6.3 Power board (715G7300P02001001R)

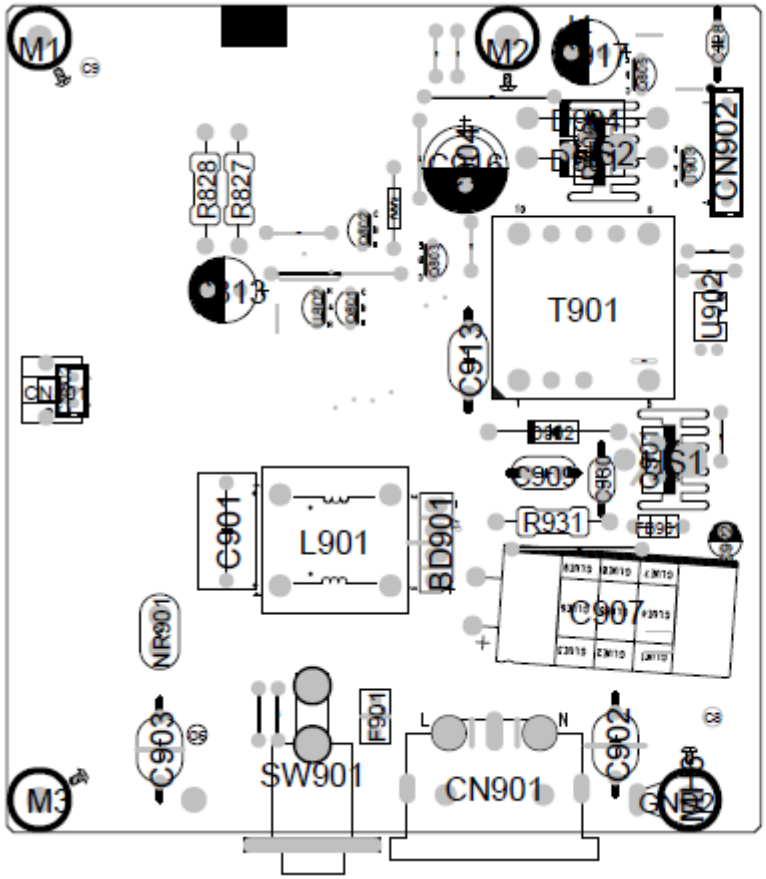

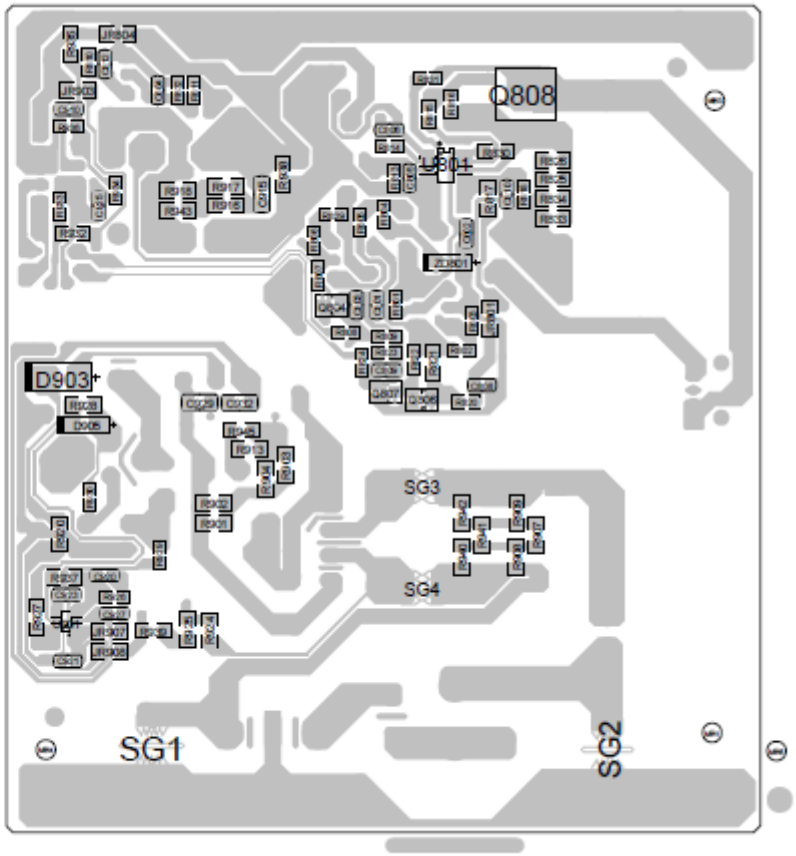

7.Wiring Diagram

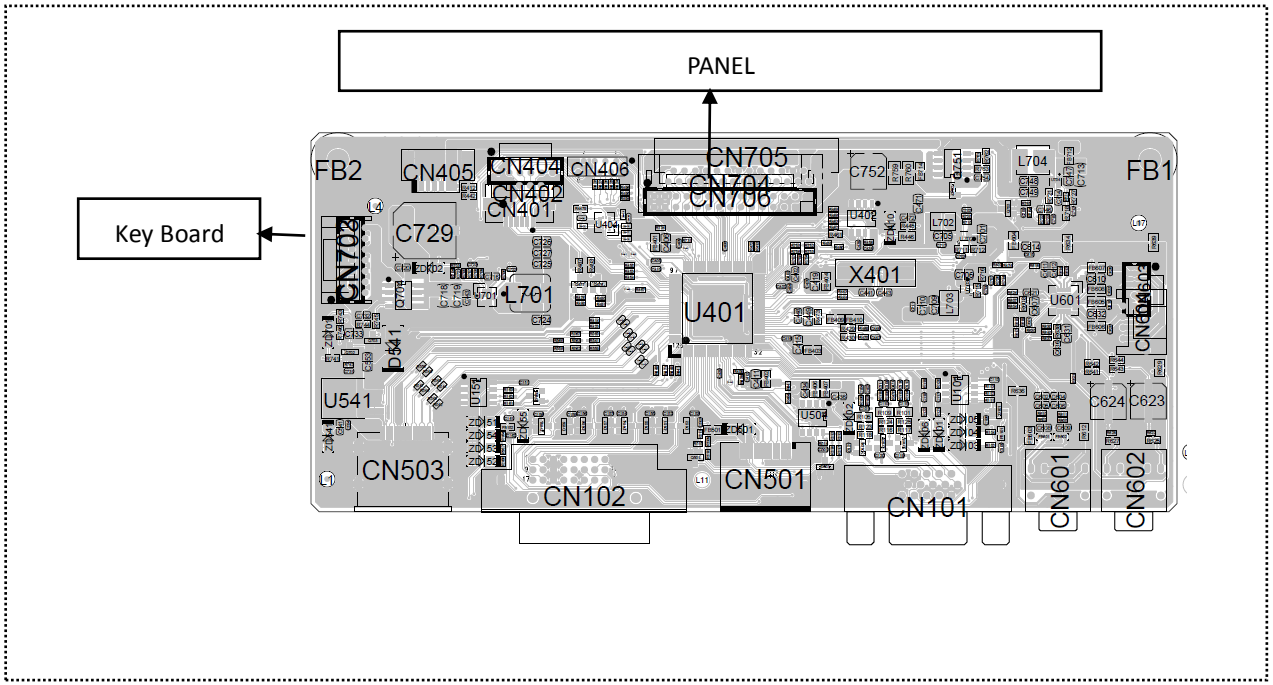

8. Scaler Board Overview

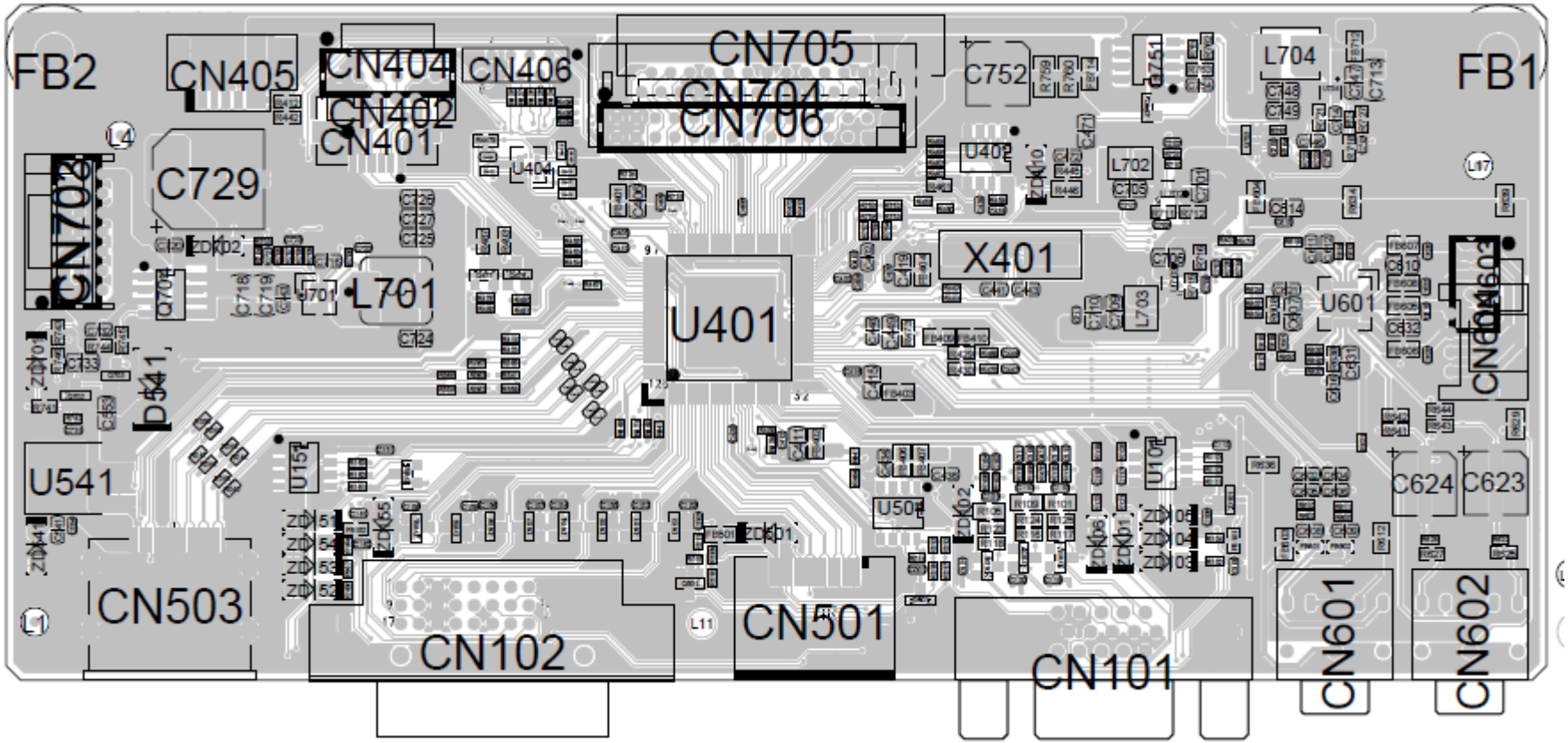

9. Mechanical Instructions

Step	Figure	Description
Remove the hinge assy.		Press the release button to slide out hinge assy.
Remove the back cover	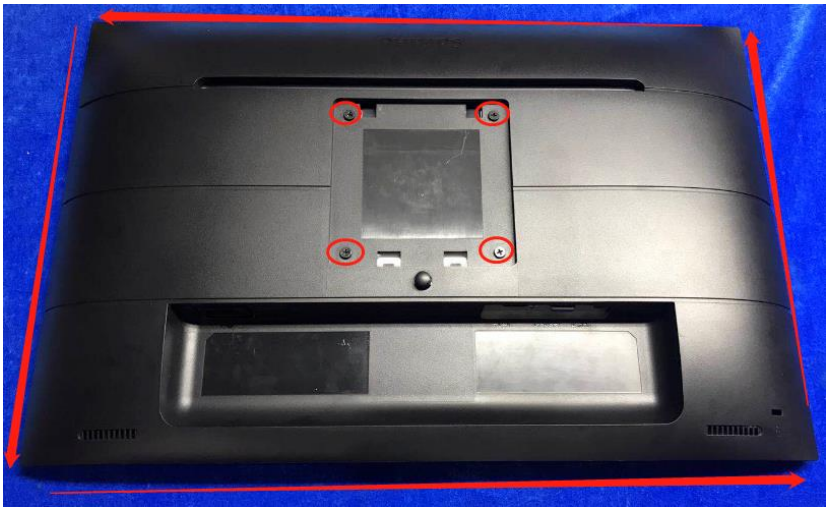	Release the screws. Use the tool to open all the latches to remove back cover.

Remove the main frame from panel	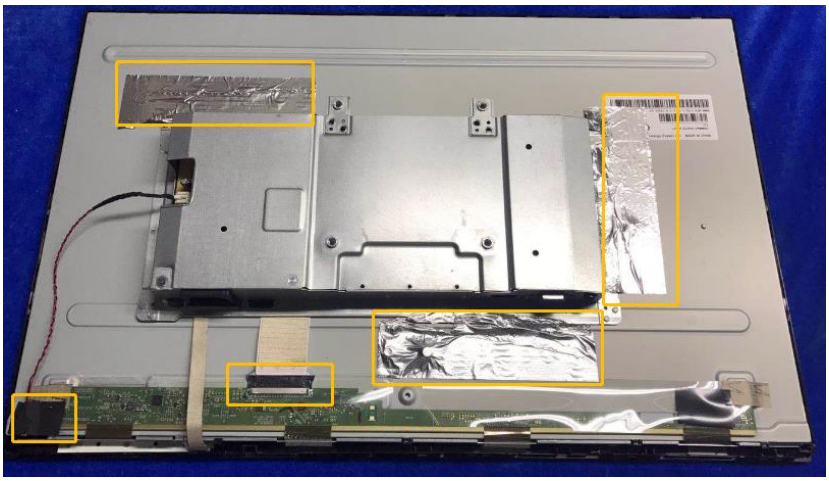 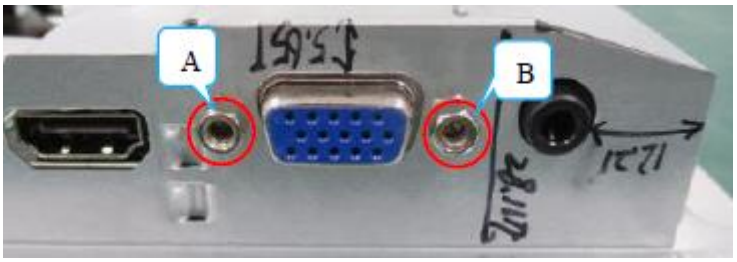	Tear out all tapes. Release the screws and disconnect the connectors to separate the main frame from panel.
Separate boards from panel	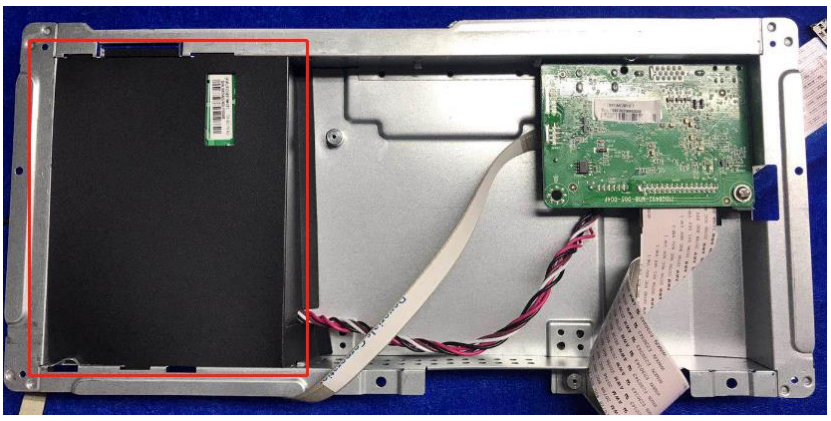 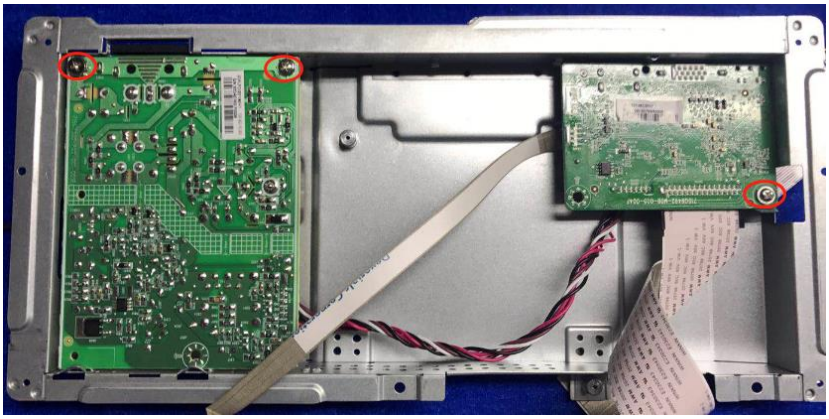	Remove mylar. Release screws from boards.

	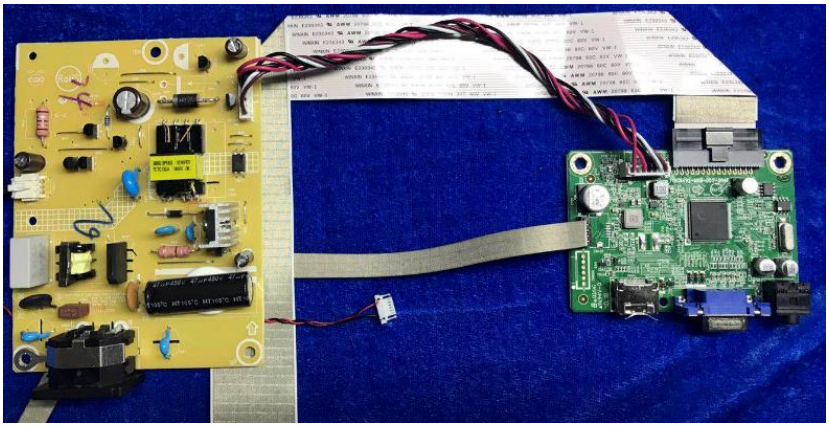	
The panel		The panel

10. Repair Flow Chart

1. No Power

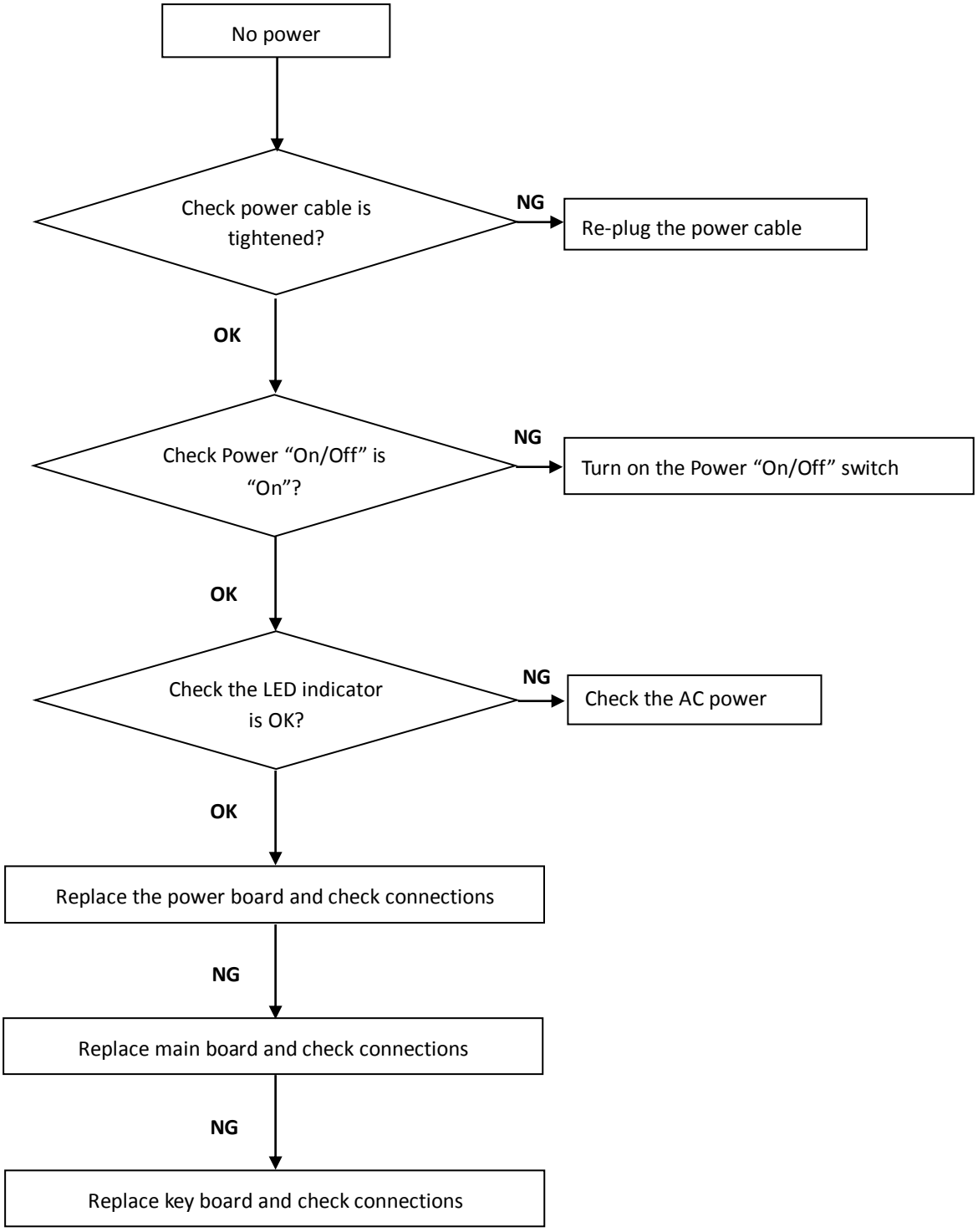

2. No Video (Power LED White)

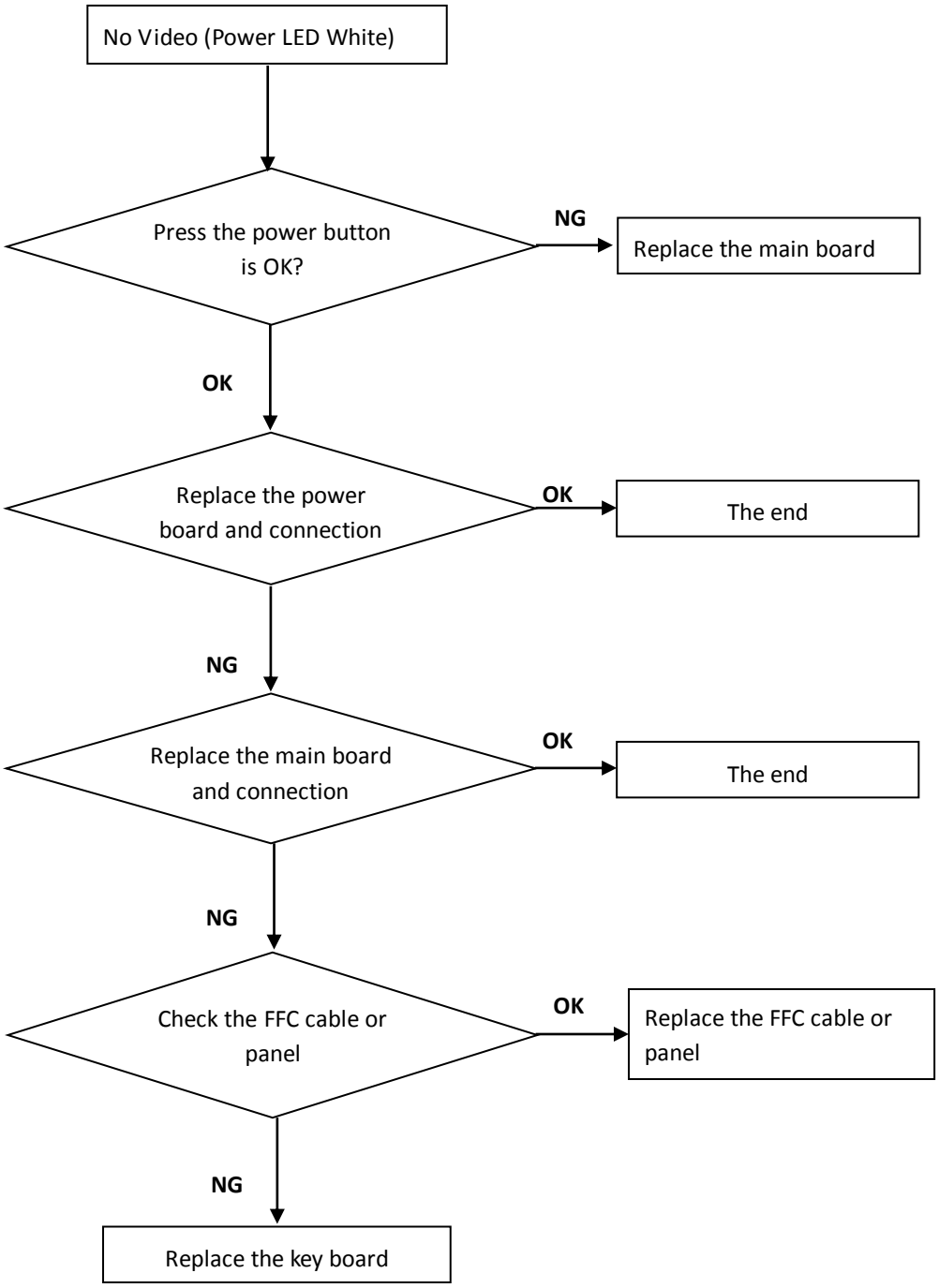

3. DIM

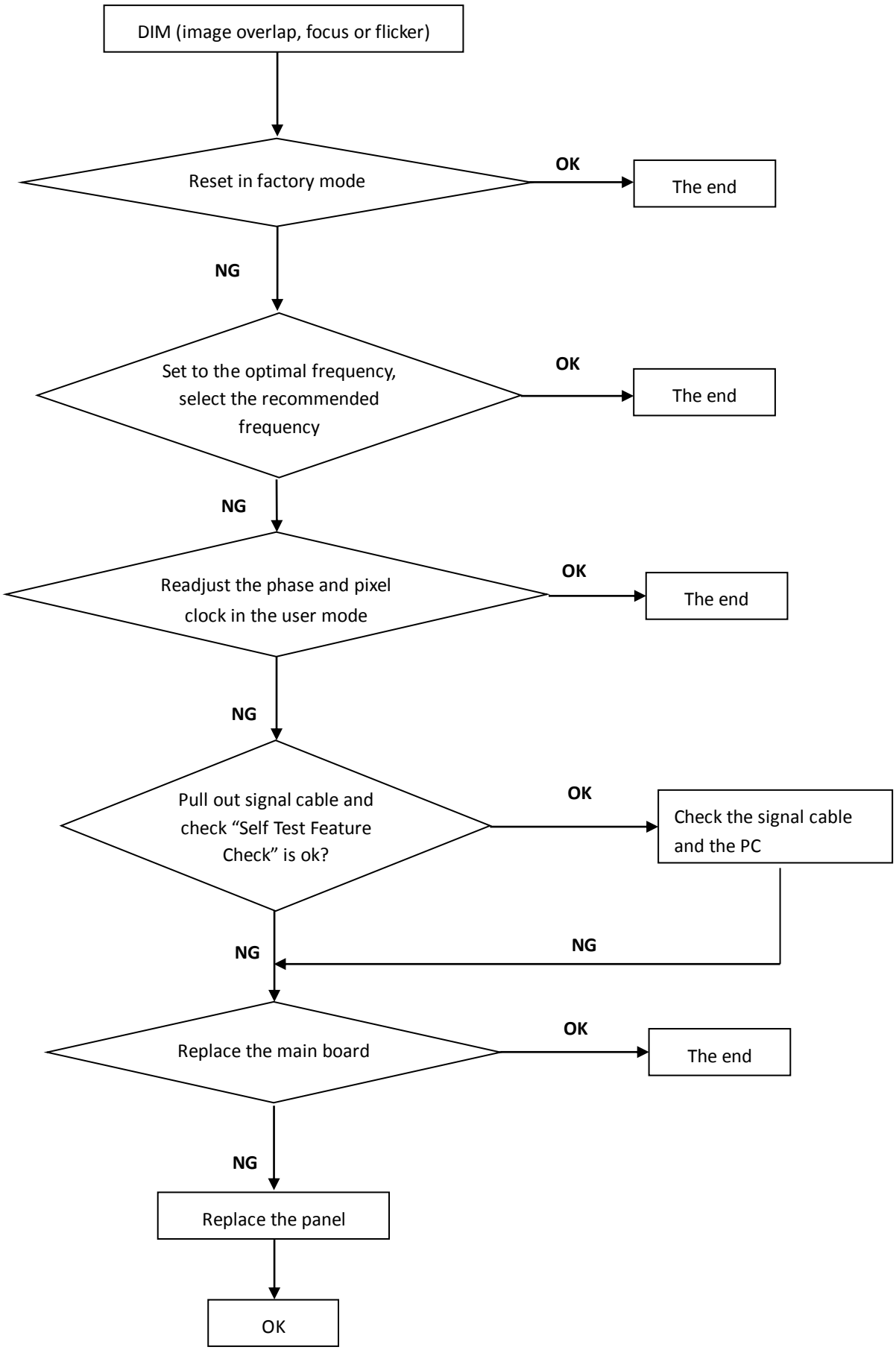
DIM (image overlap, focus or flicker)
Reset in factory mode
OK
The end
NG
Set to the optimal frequency, select the recommended frequency
OK
The end
NG
Readjust the phase and pixel clock in the user mode
OK
The end
NG
Pull out signal cable and check “Self Test Feature Check” is ok?
OK
Check the signal cable and the PC
NG
NG
Replace the main board
OK
The end
NG
Replace the panel
OK

4. Color is not optimal

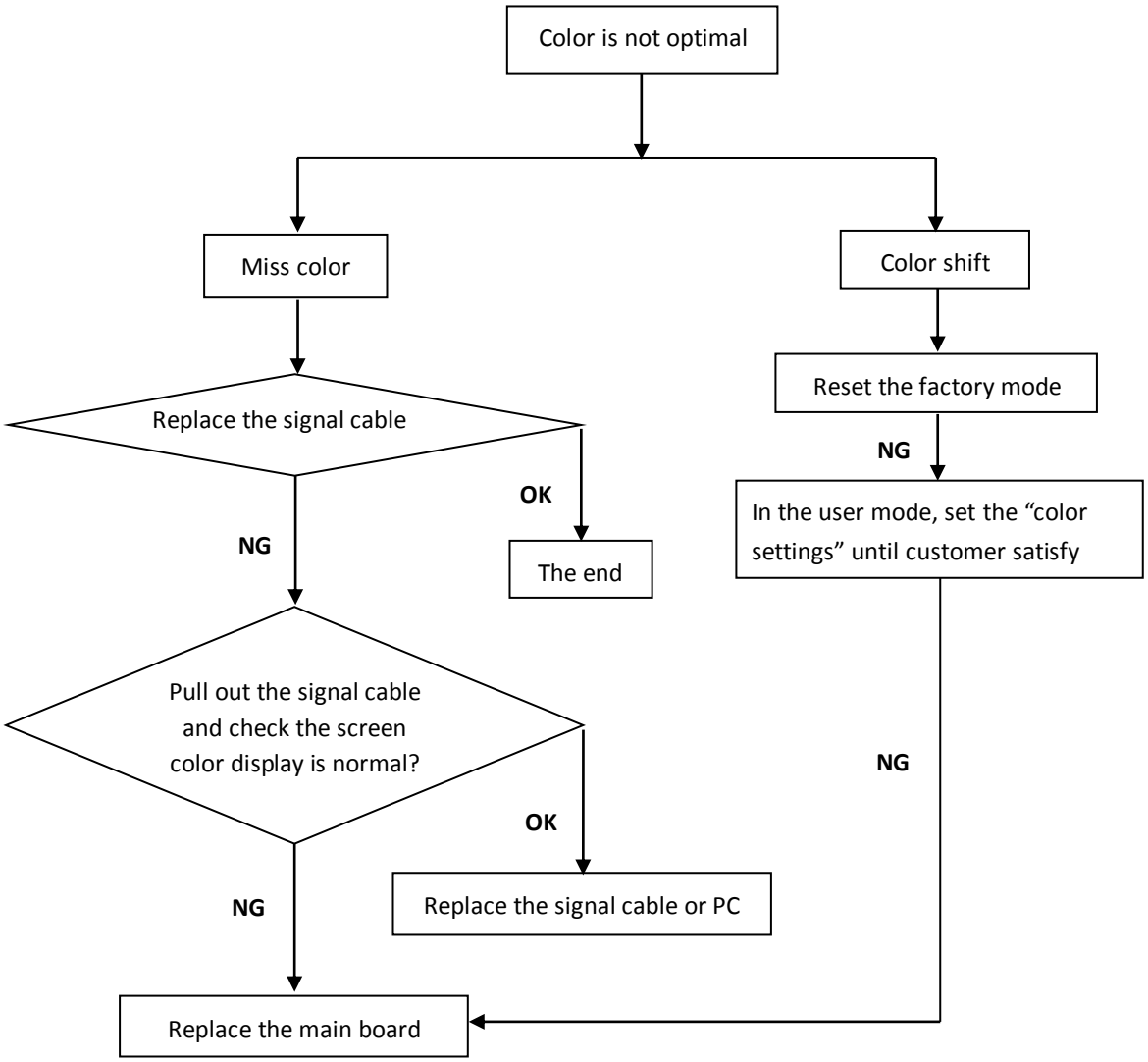

11. ISP Instruction

1.Materials list

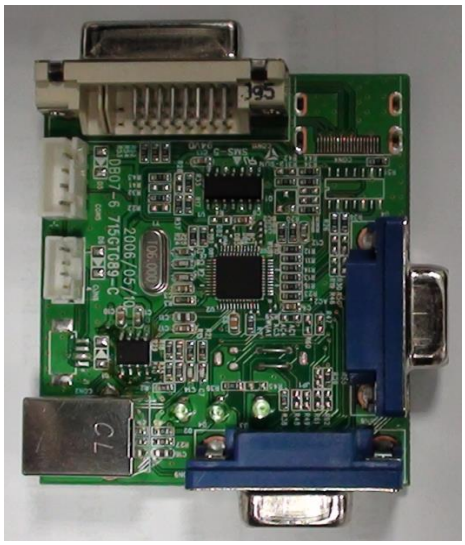

ISP JIG: 715GT089-B/C

VGA cable

TPV P/N: 089G728 GAA DB

PC

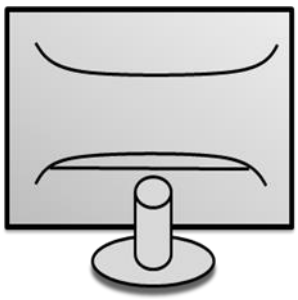

Monitor

USB cable

TPV P/N: 089G1758 X

FTC100103(MSTAR) usb drive.rar

USB port driver

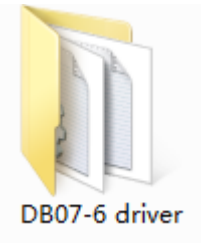

Mstar tool

ISP_Tool V4.5.107

ISP tool

New F/W

2.Connection

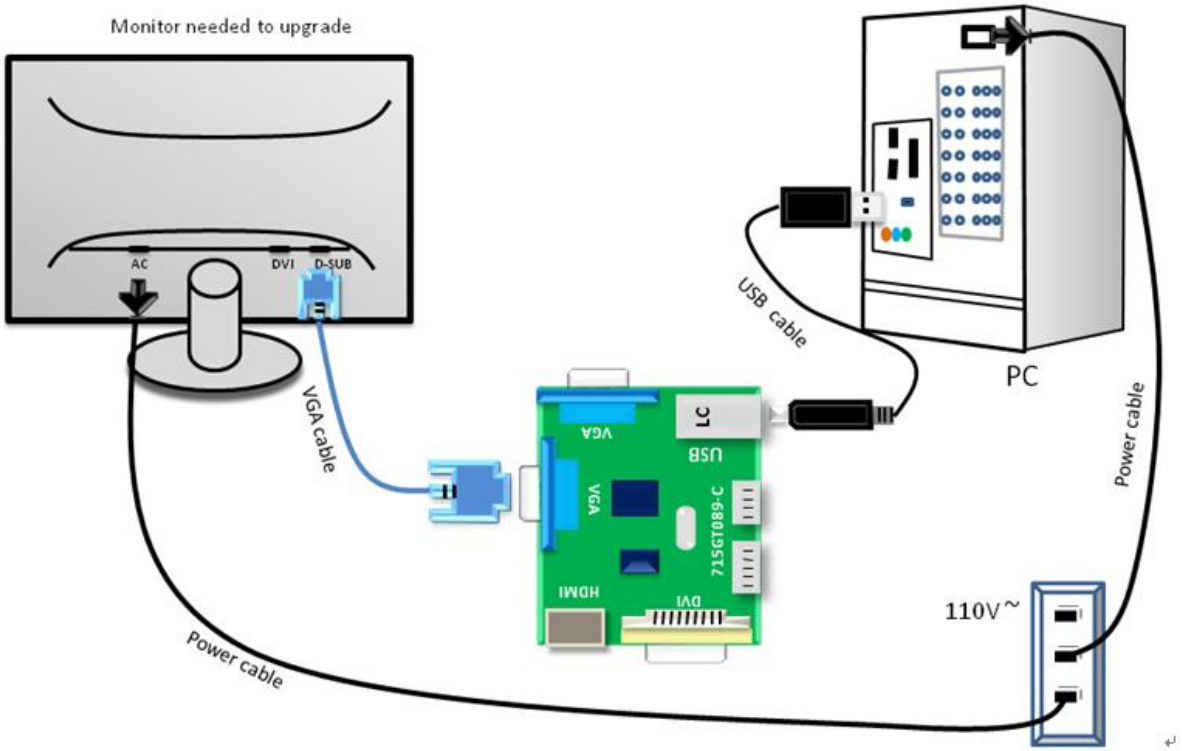

3.Install the MStar tool.

If you use this ISP board first time, you need to install mstar driver.

S1. Open folder “DB07-6 driver” 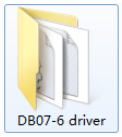

S2. Double-click “Setup.exe”

to install the MStar tool and complete as the following steps.

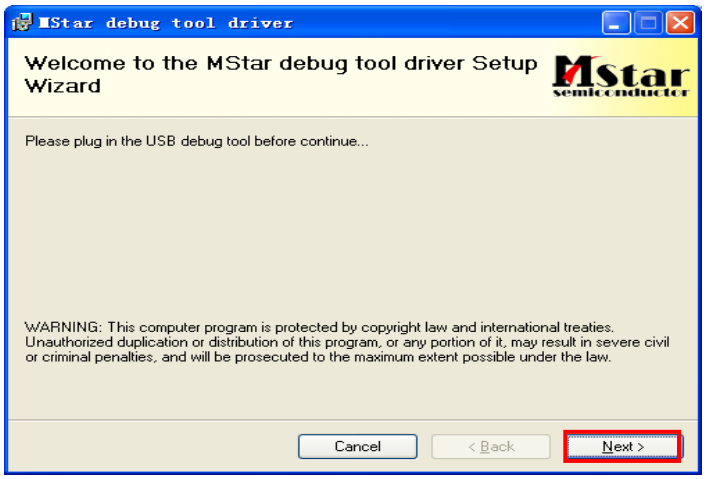

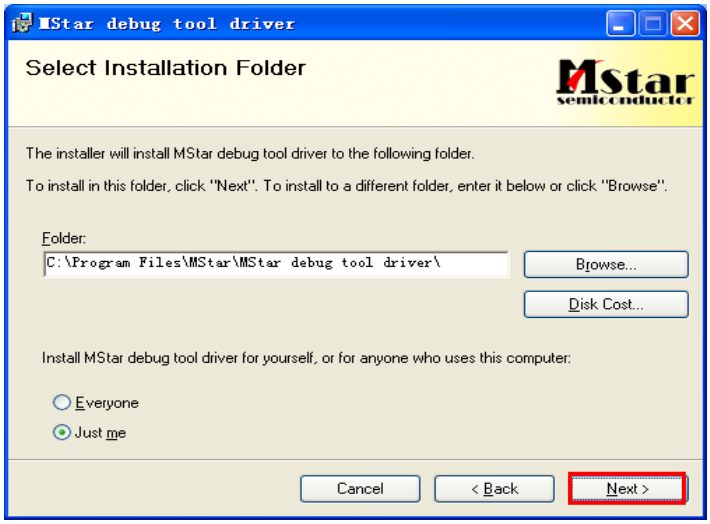

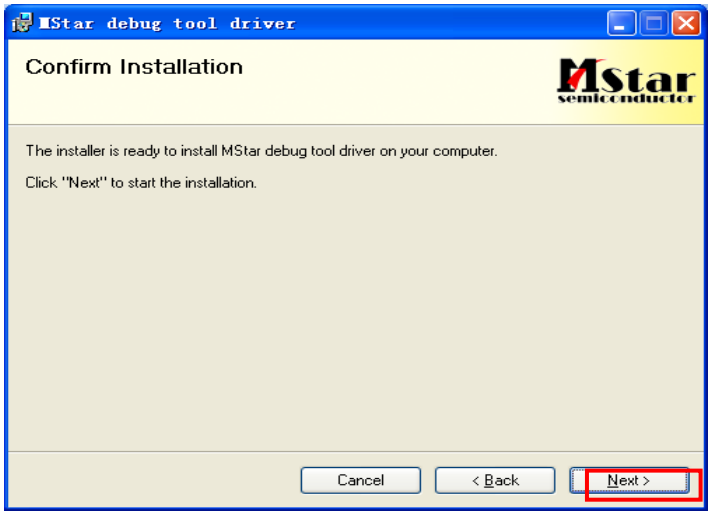

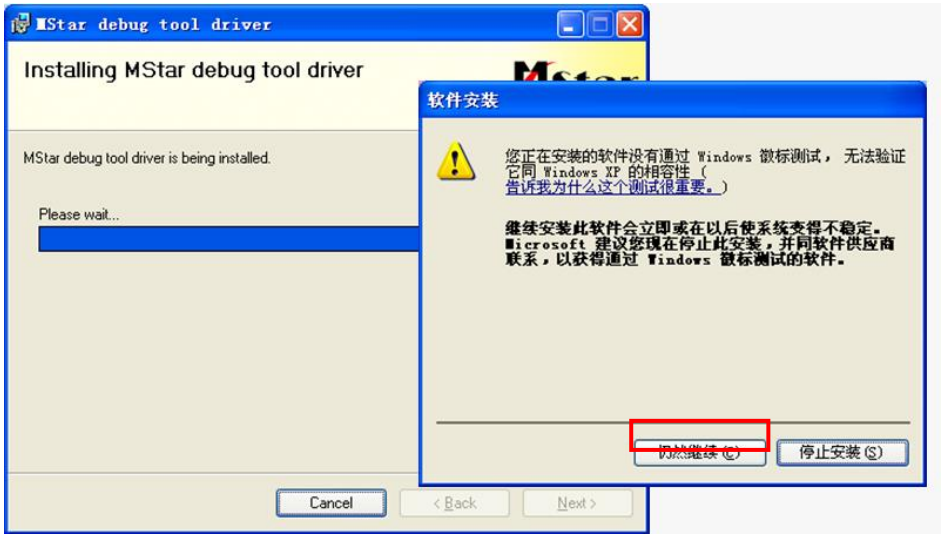

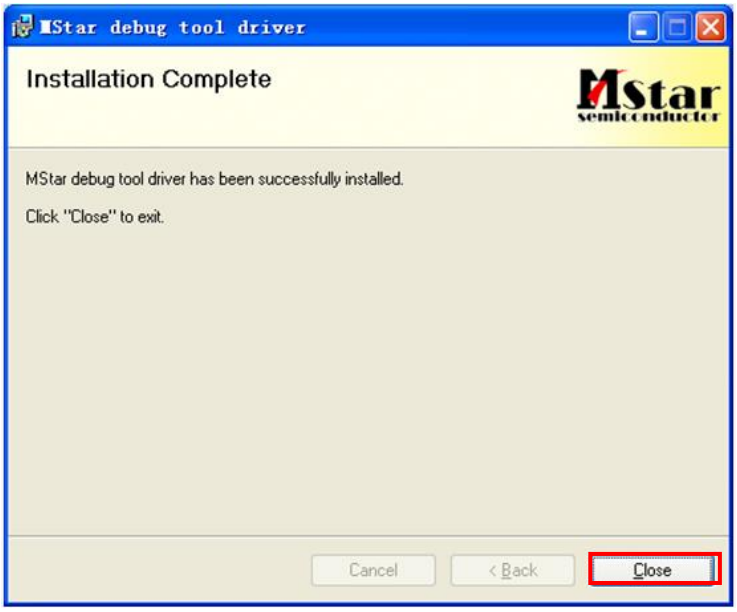

S3. When insert the USB cable to PC USB port, will pop up a Hardware Wizard to install the USB driver if you use this ISP board first time. It can auto install successfully by itself.

S4. After install the USB port driver, open device management menu under computer and check if ISP Driver is installed successfully, see below picture as red marked.

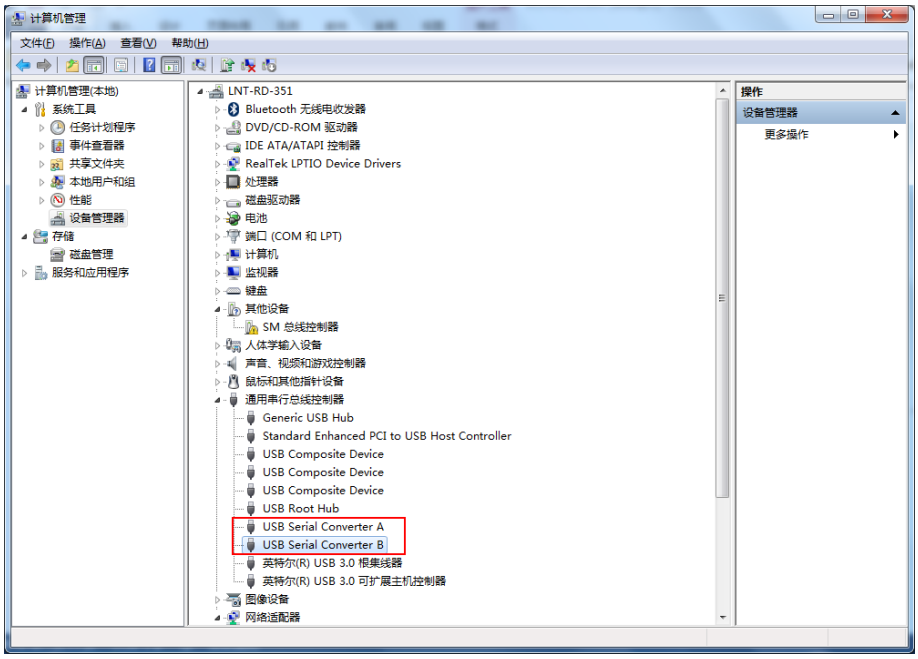

4. Install the ISP tool

Double-click

to run the ISP tool and complete as the following steps

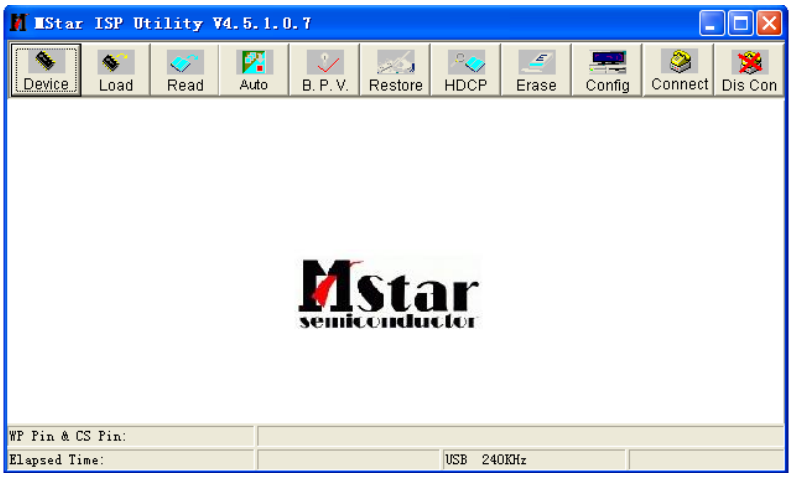

Make sure that all connect cables are OK at frist,click button “Connect”, Picture will appear as follows,then click “OK”

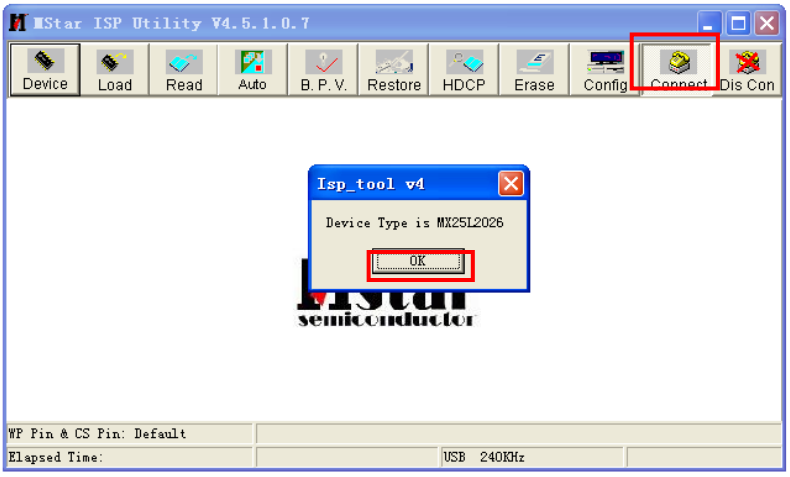

Click read button and open the right software. In order to prevent HDCP key data loss, please must load the file name contain “reduce” of the firmware.

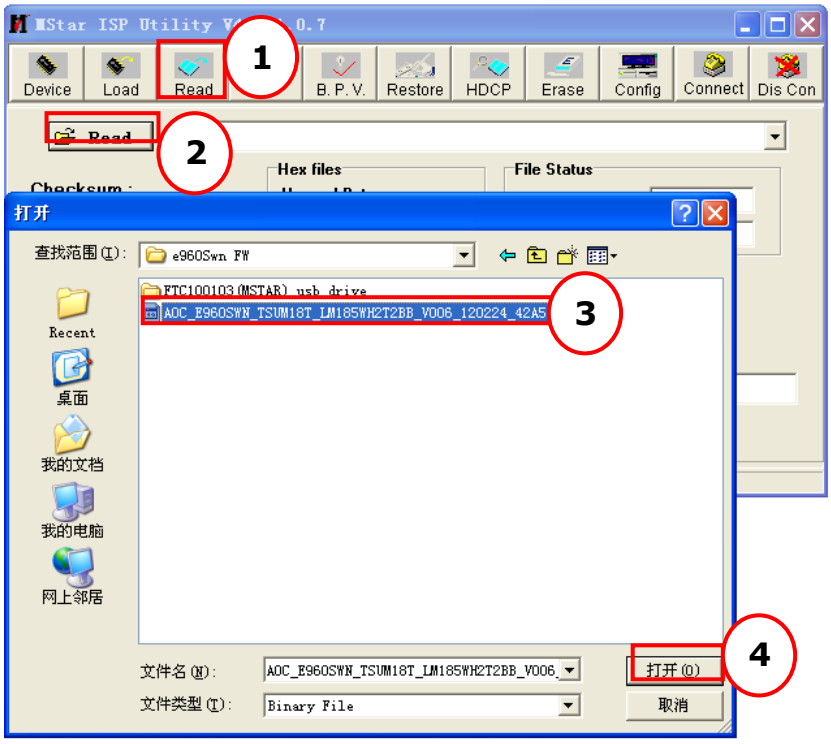

Click “Auto”, Select “File area” under “Erase Device ” (protect the User Data), select default for the rest. Click button “Run”.Waiting for write completed

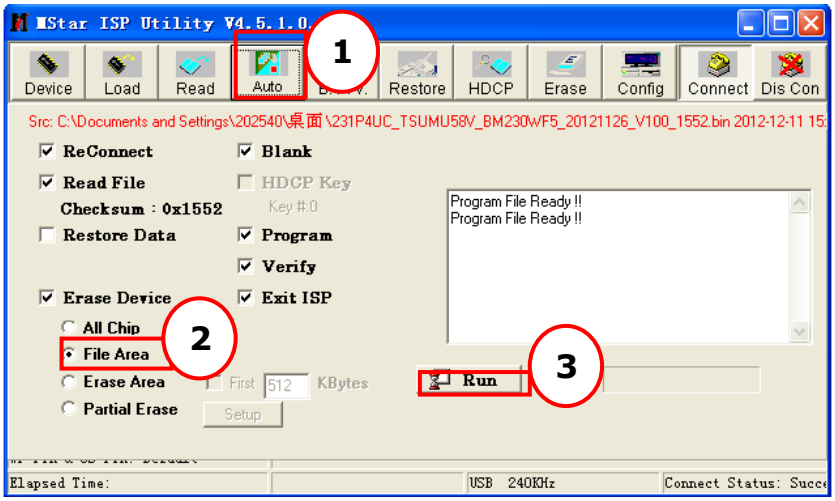

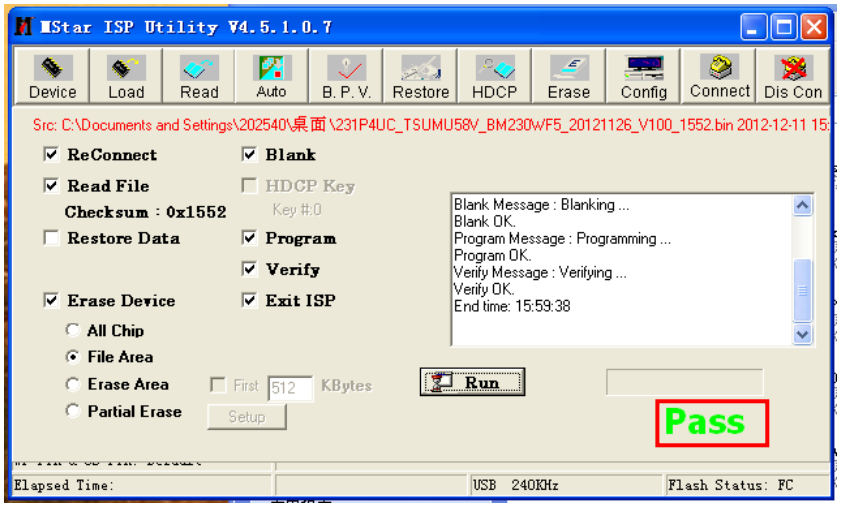
MStar ISP Utility V4.5.1.0.7
Device
Load
Read
Auto
B. P. V.
Restore
HDCP
Erase
Config
Connect
Dis Con
Src: C:\Documents and Settings\202540\桌面\231P4UC_TSUMU58V_BM230WF5_20121126_V100_1552.bin 2012-12-11 15:
ReConnect
Blank
Read File
HDCP Key
Checksum : 0x1552
Key #:0
Restore Data
Program
Verify
Erase Device
Exit ISP
All Chip
File Area
Erase Area
First
512
KBytes
Partial Erase
Setup
Run
Blank Message : Blanking ...
Blank OK.
Program Message : Programming ...
Program OK.
Verify Message : Verifying ...
Verify OK.
End time: 15:59:38
Pass
Elapsed Time:
USB 240KHz
Flash Status: FC

12. DDC Instruction

1. Test Environment Preparation:

1. Materials list

HDMI cable (male to male)

USB cable

TPV P/N: 089G1758 X

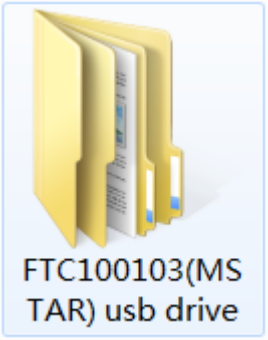

USB port driver

ISP JIG: 715GT089-B

PC

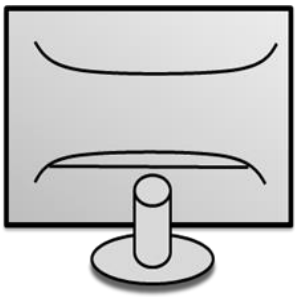

Monitor

ISP tool

EDID

2. Connection(DC on the monitor)

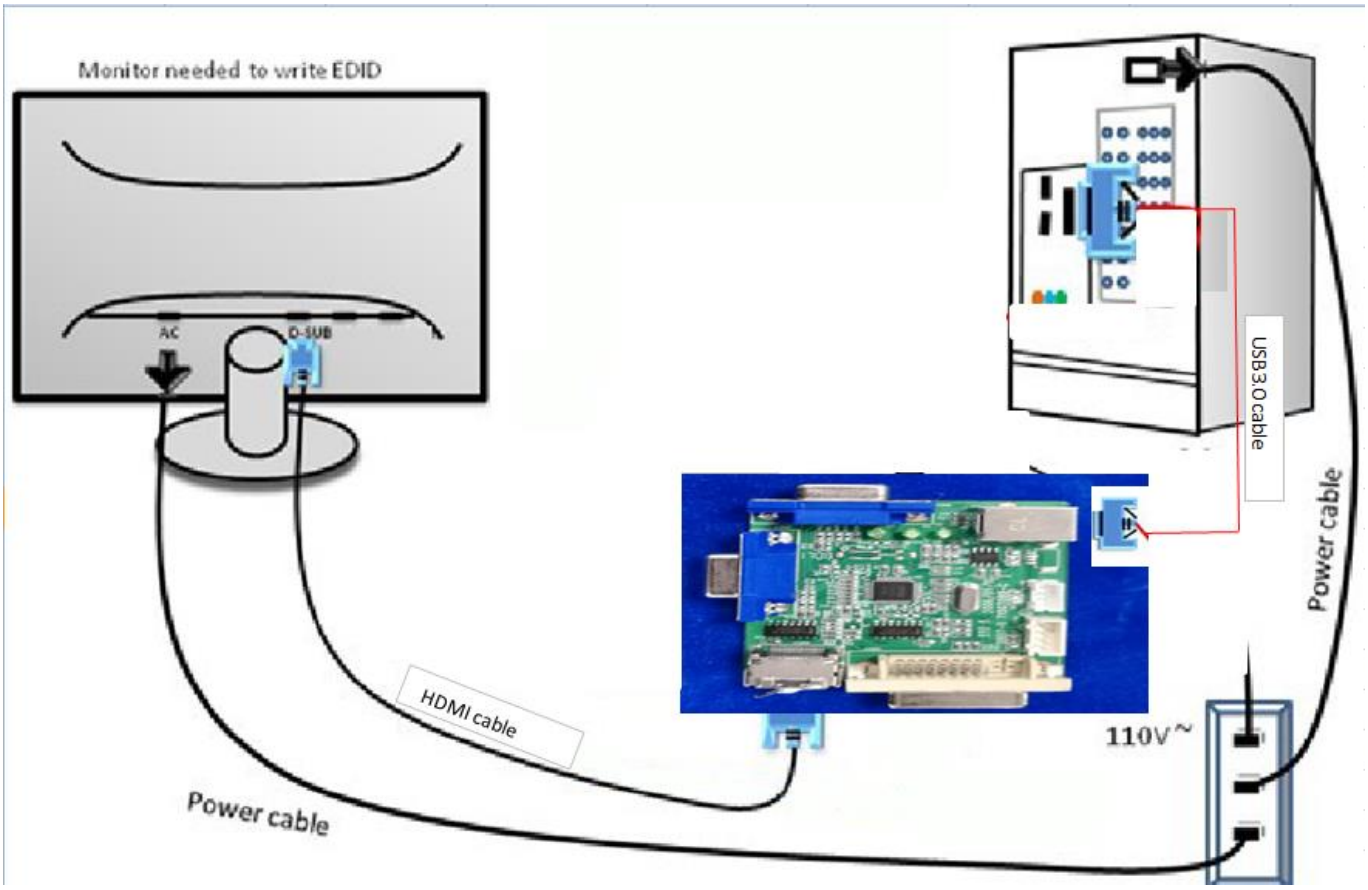

3. Install USB driver.

4. Prepare the EDID:

S1. Copy one folder as MMD 230B8 which must contains “config.ini” file.

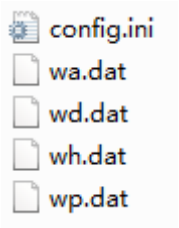

S2. Copy MMD 230B8 to DDC folder and put DDC and ISP tool together.

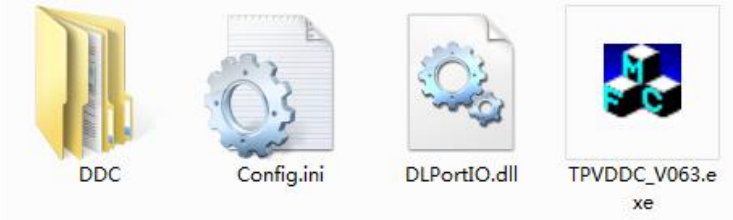

S3.Double-click

the icon to open the tool.

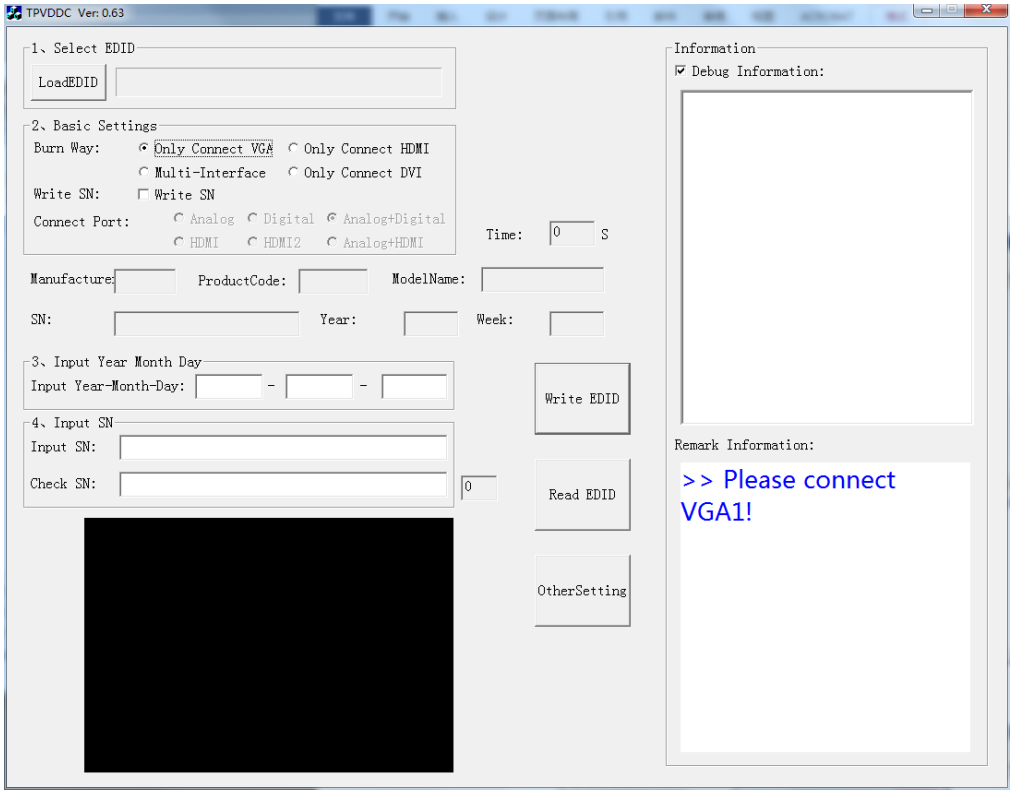

S4.Select the EDID folder as the below picture.(here take 236E7 for example)

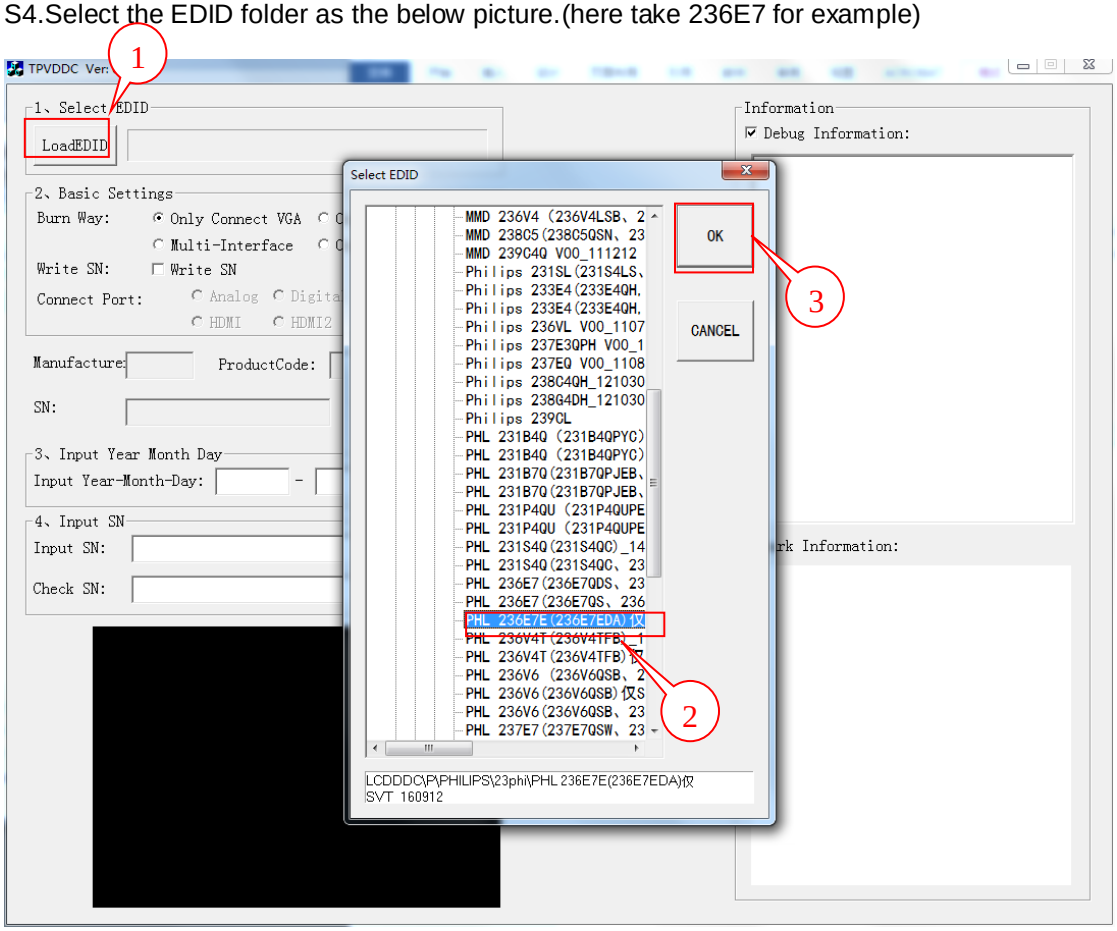

S5.Type in the 14 digit S/N,then click “Write EDID”

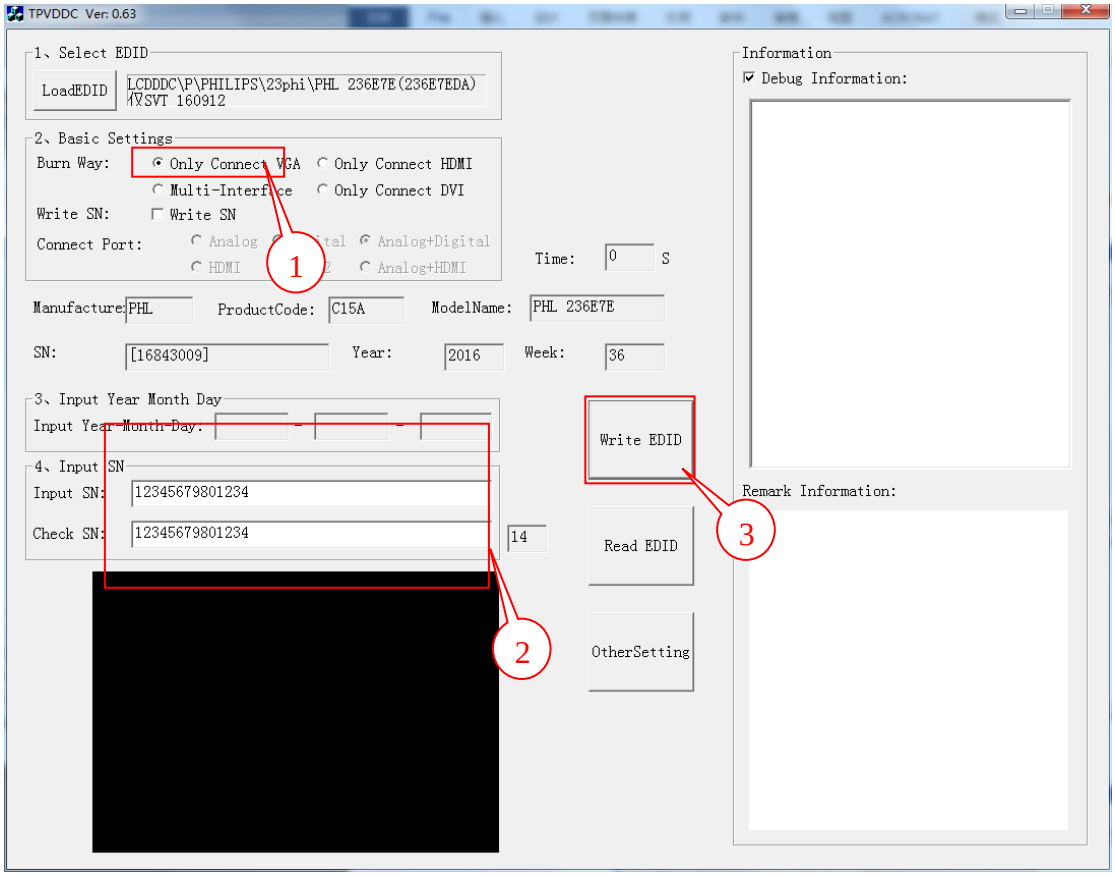

S6.When the green “PASS” appear, the process is finished.

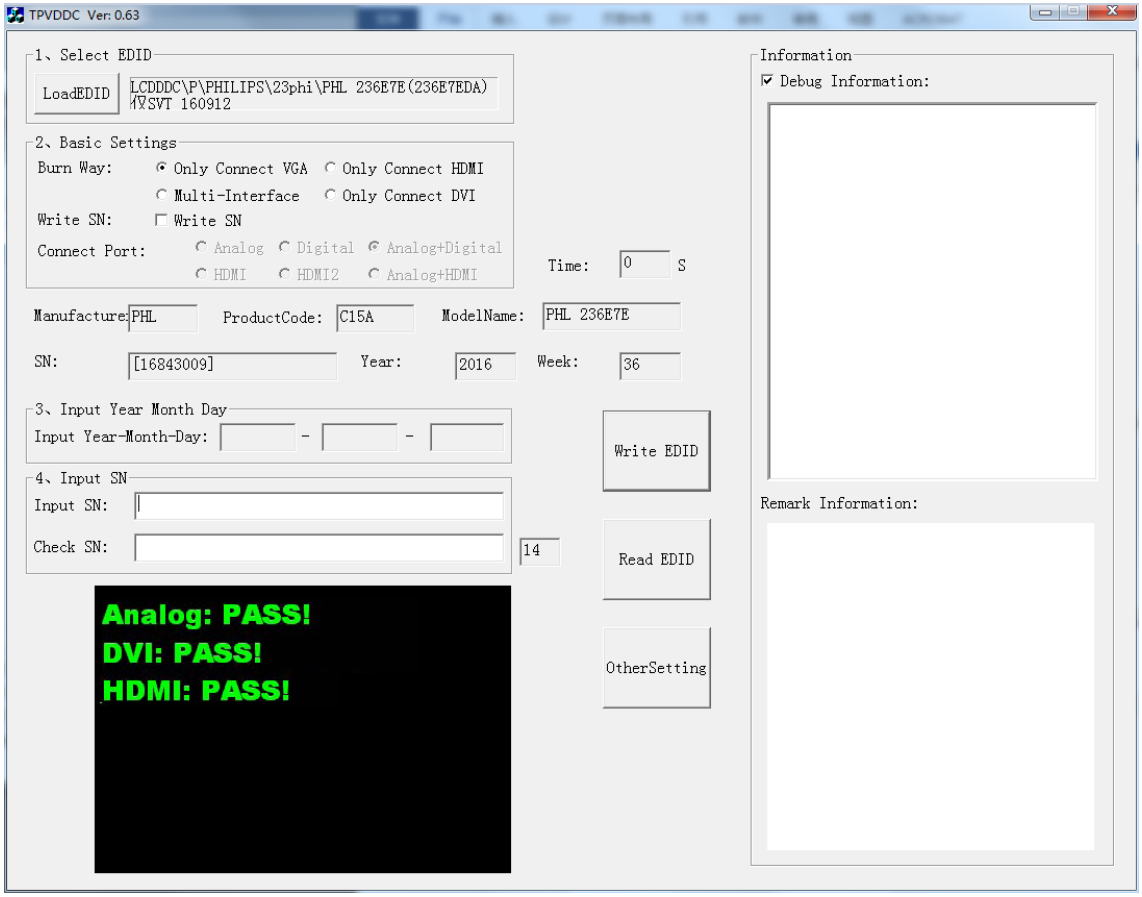

12.6 Troubleshooting

1. Can't write error.
2. Try below few ways to cure can't write errors!

(1) AC on the monitor and turn on it.(Restart the monitor)

(2) Take apart the monitor and connect the 7pin of EEPROM to GND to diable write protection then write EDID one by one.

(3) Set the Burn in on last to try again.

Analog EDID：

```
00 01 02 03 04 05 06 07 08 09 0A 0B 0C 0D 0E 0F
        ------------------------------------------------
  00| 00 FF FF FF FF FF FF 00 41 0C 36 09 B5 69 0F 00
  10| 0C 1D 01 03 6E 31 1E 78 2A 3A 65 A7 55 52 9C 27
  20| 0F 50 54 BF EF 00 D1 C0 B3 00 95 00 81 80 81 40
  30| 81 C0 01 01 01 01 28 3C 80 A0 70 B0 23 40 30 20
  40| 36 00 E8 29 11 00 00 1A 00 00 00 FF 00 31 33 32
  50| 32 31 33 31 32 33 31 32 33 33 00 00 00 FC 00 50
  60| 48 4C 20 32 33 30 42 38 51 0A 20 20 00 00 00 FD
  70| 00 32 4C 1E 53 11 00 0A 20 20 20 20 20 20 00 0C

EDID Structure Version/Revision: 01 03


<-Vendor/Product Identification:->
        ID Manufacturer Name:    PHL
        ID Product Code:         0936
        ID Serial Number:        1010101
        Week of Manufacture:     12
        Year of Manufacture:     2019

<-Basic Display Parameters/Features:->
        Video i/p definition:    Analog
        Max. H. Image Size :     49cm
        Max. V. Image Size :     30cm
        Display Gamma :          2.2


<-Color Characteristics:->
        Rx: 0.652    Gx: 0.322    Bx: 0.153    Wx: 0.312
        Ry: 0.335    Gy: 0.611    By: 0.061    Wy: 0.329
```

<-Established Timings:->

Established Timings 1:BF

720 x 400 @ 70Hz VGA,IBM

640 x 480 @ 60Hz VGA,IBM

640 x 480 @ 67Hz Apple,Mac II

640 x 480 @ 72Hz VESA

640 x 480 @ 75Hz VESA

800 x 600 @ 56Hz VESA

800 x 600 @ 60Hz VESA

Established Timings 2:EF

800 x 600 @ 72Hz VESA

800 x 600 @ 75Hz VESA

832 x 624 @ 75Hz Apple,Mac II

1024 x 768 @ 60Hz VESA

1024 x 768 @ 70Hz VESA

1024 x 768 @ 75Hz VESA

1280 x1024 @ 75Hz VESA

Established Timings 3:00

<-Standard Timing Identification:->

1920 x 1080 @ 60Hz

1680 x 1050 @ 60Hz

1440 x 900 @ 60Hz

1280 x 1024 @ 60Hz

1280 x 960 @ 60Hz

1280 x 720 @ 60Hz

<-Detailed Timing Descriptions:->

FC (Monitor Name) : PHL 230B8Q

FD (Monitor Limits):

Min. V. rate: 50 Hz

Max. V. rate: 76 Hz

Min. H. rate: 30 KHz

Max. H. rate: 83 KHz

Max. P Clock: 170 MHz

FF (Monitor SN) : 1322131231233

Detailed Timing : 1920x1200 @ 60Hz

Extension Flag : 00
Block0 Checksum : 0C

HDMI EDID：

```
00 01 02 03 04 05 06 07 08 09 0A 0B 0C 0D 0E 0F
        --------------------Block 0--------------------
  00| 00 FF FF FF FF FF FF 00 41 0C 36 09 B5 69 0F 00
  10| 0C 1D 01 03 80 31 1E 78 2A 3A 65 A7 55 52 9C 27
  20| 0F 50 54 BF EF 00 D1 C0 B3 00 95 00 81 80 81 40
  30| 81 C0 01 01 01 01 28 3C 80 A0 70 B0 23 40 30 20
  40| 36 00 E8 29 11 00 00 1A AF 4B 80 A0 70 B0 2B 40
  50| 30 20 36 00 E8 29 11 00 00 1A 00 00 00 FC 00 50
  60| 48 4C 20 32 33 30 42 38 51 0A 20 20 00 00 00 FD
  70| 00 30 4C 1E 5F 15 00 0A 20 20 20 20 20 20 01 0E
        --------------------Block 1--------------------
  00| 02 03 29 F1 4B 10 1F 05 14 04 13 03 12 02 11 01
  10| 23 09 07 07 83 01 00 00 67 03 0C 00 10 00 00 3C
  20| 68 1A 00 00 01 01 30 4C 00 8C 0A D0 8A 20 E0 2D
  30| 10 10 3E 96 00 E8 29 11 00 00 18 01 1D 00 72 51
  40| D0 1E 20 6E 28 55 00 E8 29 11 00 00 1E 8C 0A D0
  50| 8A 20 E0 2D 10 10 3E 96 00 E8 29 11 00 00 18 8C
  60| 0A D0 90 20 40 31 20 0C 40 55 00 E8 29 11 00 00
  70| 18 00 00 00 00 00 00 00 00 00 00 00 00 00 00 5C

-------------------------------------------------------
Block 0:

EDID Structure Version/Revision: 01 03
<-Vendor/Product Identification:->
        ID Manufacturer Name:    PHL
        ID Product Code:         0936
        ID Serial Number:        1010101
        Week of Manufacture:     12
        Year of Manufacture:     2019

<-Basic Display Parameters/Features:->
        Video i/p definition:    Digital
        Max. H. Image Size :     49cm
        Max. V. Image Size :     30cm
        Display Gamma :          2.2
```

<-Color Characteristics:->

Rx: 0.652 Gx: 0.322 Bx: 0.153 Wx: 0.312

Ry: 0.335 Gy: 0.611 By: 0.061 Wy: 0.329

<-Established Timings:->

Established Timings 1:BF

720 x 400 @ 70Hz VGA,IBM

640 x 480 @ 60Hz VGA,IBM

640 x 480 @ 67Hz Apple,Mac II

640 x 480 @ 72Hz VESA

640 x 480 @ 75Hz VESA

800 x 600 @ 56Hz VESA

800 x 600 @ 60Hz VESA

Established Timings 2:EF

800 x 600 @ 72Hz VESA

800 x 600 @ 75Hz VESA

832 x 624 @ 75Hz Apple,Mac II

1024 x 768 @ 60Hz VESA

1024 x 768 @ 70Hz VESA

1024 x 768 @ 75Hz VESA

1280 x1024 @ 75Hz VESA

Established Timings 3:00

<-Standard Timing Identification:->

1920 x 1080 @ 60Hz

1680 x 1050 @ 60Hz

1440 x 900 @ 60Hz

1280 x 1024 @ 60Hz

1280 x 960 @ 60Hz

1280 x 720 @ 60Hz

<-Detailed Timing Descriptions:->

Detailed Timing : 1920x1200 @ 60Hz

Detailed Timing : 1920x1200 @ 75Hz

FC (Monitor Name) : PHL 230B8Q

FD (Monitor Limits):

Min. V. rate: 48 Hz
Max. V. rate: 76 Hz
Min. H. rate: 30 KHz
Max. H. rate: 95 KHz
Max. P Clock: 210 MHz

Extension Flag : 01
Block0 Checksum : 0E

Block 1:

Extended Block Type: CEA 861B
Detailed Timing Blocks start at Byte: 29
DTV Underscan YES
DTV Basic Audio YES
YCbCr (4:4:4) YES
YCbCr (4:2:2) YES

<-Video Short Block Description:->
1920 x 1080 P 59.94/60Hz 16:9
1920 x 1080 P 50Hz 16:9
1920 x 1080 I 59.94/60Hz 16:9
1920 x 1080 I 50Hz 16:9
1280 x 720 P 59.94/60Hz 16:9
1280 x 720 P 50Hz 16:9
720 x 480 P 59.94/60Hz 16:9
720 x 576 P 50Hz 16:9
720 x 480 P 59.94/60Hz 4:3
720 x 576 P 50Hz 4:3
640 x 480 P 59.94/60Hz 4:3

<-Audio Short Block Description:->
Numbers of Audio Channels: 2
Audio Format Description: Linear PCM
Audio Supported: 48KHz 44KHz 32KHz
Audio Bit Rate: 24bit 20bit 16bit

<-Speaker Allocation:->

Speaker Allocation: FL/FR

<-Detailed Timing Descriptions: ->

Detailed Timing Descriptions: 720x480 @ 60Hz
H Image Size: 488 mm V Image Size: 297 mm
Pixel Clock: 27 Hz Refreshed Mode: Non-Interlaced

Detailed Timing Descriptions: 1280x720 @ 60Hz
H Image Size: 488 mm V Image Size: 297 mm
Pixel Clock: 74 Hz Refreshed Mode: Non-Interlaced

Detailed Timing Descriptions: 720x480 @ 60Hz
H Image Size: 488 mm V Image Size: 297 mm
Pixel Clock: 27 Hz Refreshed Mode: Non-Interlaced

Detailed Timing Descriptions: 720x576 @ 50Hz
H Image Size: 488 mm V Image Size: 297 mm
Pixel Clock: 27 Hz Refreshed Mode: Non-Interlaced

Block1 Checksum : 5C

13. White Balance, Luminance Adjustment

1. Apparatuses and program: analyzer CA-210, PC, tool, FGA adjustment program (PhilipsLEDFGA.DDCI), Pattern generator.

2. Equipment installation:

a. Connect analyzer CA-210 to PC by USB connector, install drive program CA-SDK Ver4.00 for CA-210 and restart PC after finish installing

b. Install Port95NT drive program, set PC printer connector mode as ECP mode and reset PC after finish installing.

c. Connect tool as follow:

Note: It's not necessary to connect Port2.

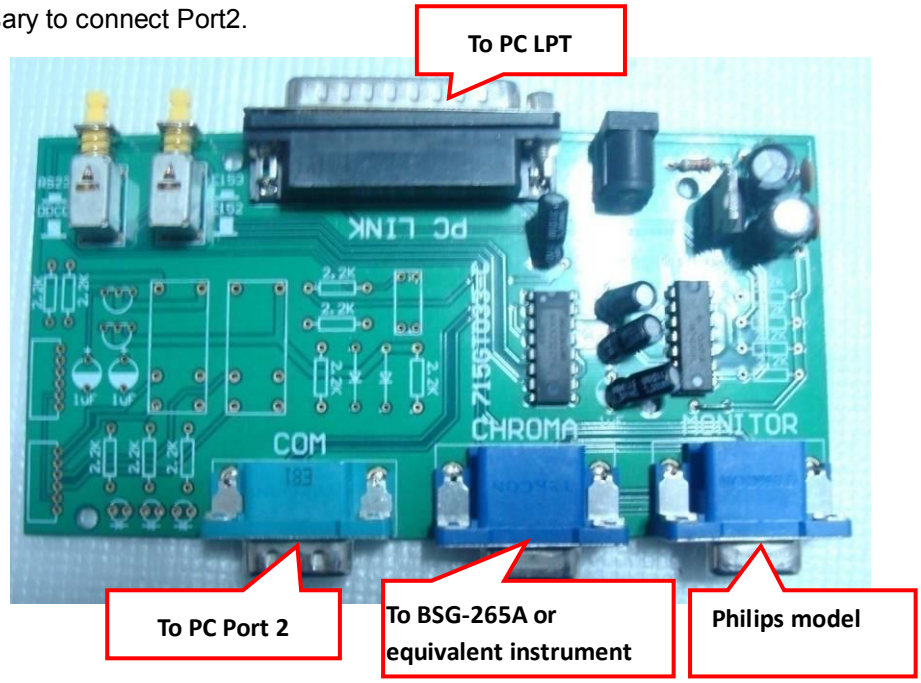

3. Adjustment

Preparation before adjustment:

a. Monitor should be warmed up for more than half an hour.

b. Make sure that the tools are connected right and drive programs have been installed OK.

4. Adjustment process:

a. Press the power of CA-210, shut off the lens, press 0-Cal and open the lens after analyzer reset.

b. Open white balance adjustment program, select the right parameter according with the program and click OK.

c. Make sure that the lens of CA-210 aims at the center of the screen, then click START to adjust.

d. After finish adjusting, the adjustment program displays PASS, and the START button changes for NEXT, which means that you can adjust another monitor.

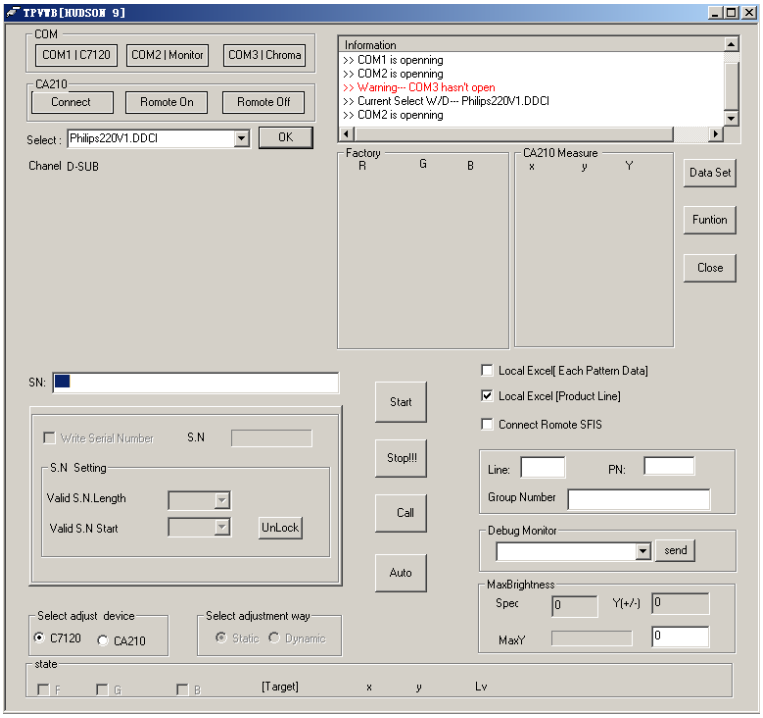

5. Color Temp confirmation

Connect the signal to the monitor, the monitor displays white-picture, use CA-210 to measure the Color Temp of the screen center and select the OSD to make sure whether the Color Temps accord with the SPEC.

CIE coordinates	(x,y)	
11500K	x = 0.270 ± 0.02 y = 0.281 ± 0.02	PerfecTune II
9300K	x = 0.283 ± 0.02 y = 0.297 ± 0.02	PerfecTune II
8200K	x = 0.291 ± 0.02 y = 0.306 ± 0.02	PerfecTune II
7500K	x = 0.298 ± 0.02 y = 0.314 ± 0.02	PerfecTune II
6500K/sRGB	x = 0.313 ± 0.02 y = 0.329 ± 0.02	PerfecTune II
sRGB	x = 0.313 ± 0.02 y = 0.329 ± 0.02	PerfecTune II
5000K	x = 0.345 ± 0.02 y = 0.357 ± 0.02	PerfecTune II

14. Monitor Exploded View

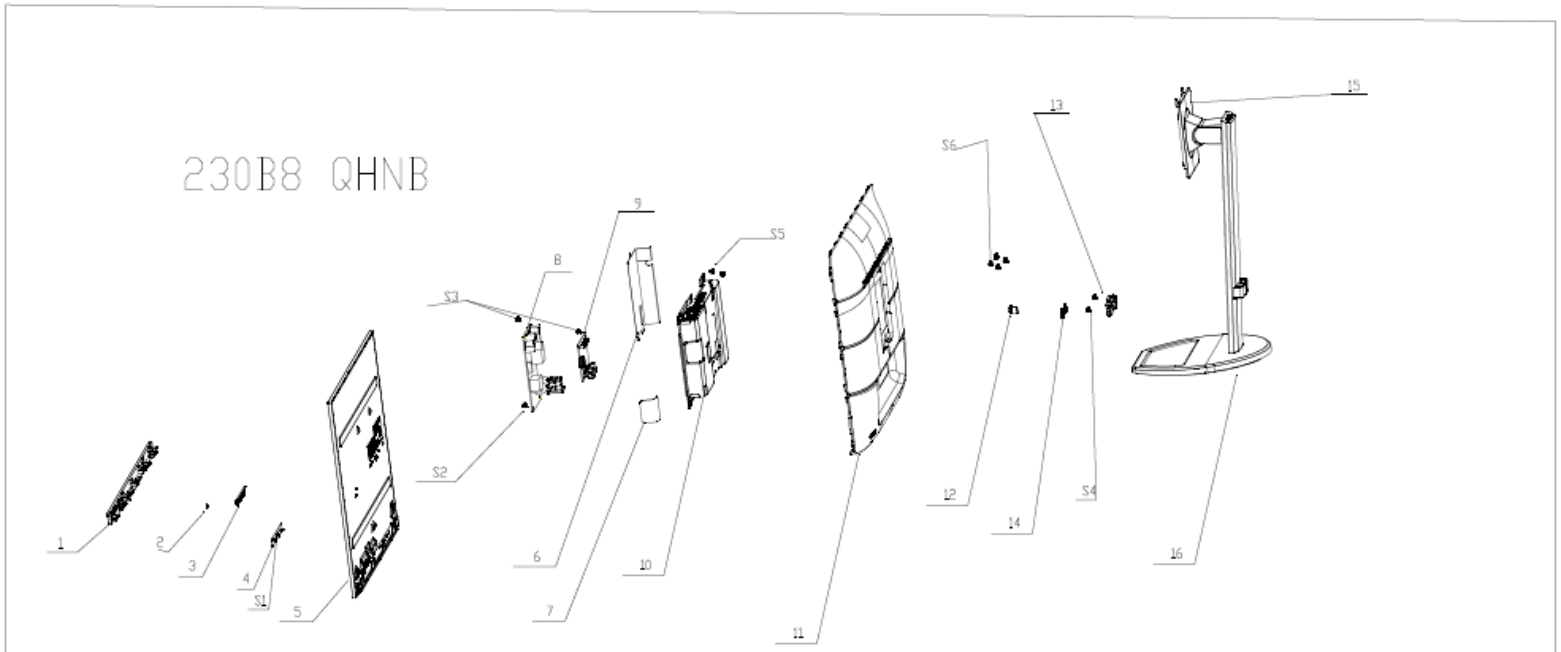

	Screw_S6	0M1G2940-10-47-CR3	4	后壳与铁盘的壁挂锁附螺丝
	Screw_S5	0M1G3030—3120	2	铁盘锁附与panel锁附螺丝
	Screw_S4	001G2030—6120	2	realeas button与扇扣锁附螺丝
	Screw_S3	0M1G1030--7120	2	锁power板/主板 D牙螺丝
	Screw_S2	0M1G3B40--8120	1	Power板接地M4
	Screw_S1	001G6019—2	3	按键板锁附前框
	Sponge	045G9901609405	1	按键处LENS的遮光胶带
	EPE PAG	045G9901609405	1	整机EPE袋
16	Base	037G1000101301	1	
15	Stand	037G1000101201	1	
14	Spring	0L9G5L2—1	2	
13	Release_Holder	G20G6245011	1	
12	ReleaseButton	A33G1146ADT-JL0100	1	
11	Rear cover	034G877902101A	1	
10	Main Frame	F15G105101101	1	
9	Main broad	715G9492	1	
8	Power broad	715G7300	1	
7	Mylar	Q52G1801545000	1	power板侧边小mylar
6	Mylar	F52G1801MNT136	1	power板大mylar
5	Panel		1	
4	Key broad	715G9511	1	
3	Key	A33G2292AMT01S0100	1	
2	Lens	A33G229301101A	1	
1	Deco	034G877801101A	1	
	品名	料号	数量	说明/备注

15. Recommended & Spare Parts List

Recommended Parts List

Vendor PN	part description
750SMT225U1A21N400	Panel Neo-1-M LM225WU1-S1A2-A11 EPA8.0 FQ L&T
A33G1146ADT-1L0100	Relase Button MMD B2B Series ABS 94HB Injection Black
A33G2292AMT-1S0100	Keypad MMD 230S8QHSB ABS 94HB Injection Black
A33G2293--2-1C0100	Lens MMD 230S8QHSB 3‰ Transparent PC
CBPRMA1PHF1	EMPTY M/B
F15G1051101101	Main frame SGCC 0.5T L315mmxW161mmxH28mm 1A1H+E
F89G1848CAA50200AL	HDMI CABLE 1800mm BLACK W/O Core Ji-Haw
F95G179M30B535	FFC CABLE 30P L=385mm P1.0mm W/HSG*2 WENXIN
F95G8014-6D703	WIRE HARNESS 6P-3P P2.0-P1.0 L=205MM 300V TIEN HSIANG
KEPCMFB9WB	KEY BOARD
PLPCGC191GFPP	POWER BOARD
Q20G6245011	Release_Holder
Q34G8778AMTB1S0130	Deco MMD 230B8QHNB ABS 94HB Injection Black
Q34G8779AMT-3S0130	Rear cover MMD 230B8QHSB ABS 94HB Injection Black 1A1H+E
Q37G1000101201	Stand Ass'y MMD M8 SEB Slim HAS
Q37G1000101301	Base Ass'y MMD M8 SEB Slim HAS

Service Kit

Description	Part No.	Picture
ISP JIG/EDID JIG	715GT089-B/C	

16. Different Parts List

Diversity of compared with					
Location	PCM Codes	Description	Location	PCM Codes	Description

Diversity of compared with					
Location	PCM Codes	Description	Location	PCM Codes	Description

17. General Product Specification

230B8QJEB
GENERAL PRODUCT
SPECIFICATION

Revision History

Ver.	Date (yy.mm.dd)	Author	Brief Description
0.1	2019.11.10	FRANK.QIU	Initial Version (230B8QJEB)

Blue: Changes than last version
Red:TBD

. ANALOG AND HDMI INPUT

. AUTO PICTURE ADJUSTMENT

. 22 FACTORY PRESET MODES AND 58 PRESET MODES WHICH CAN BE RECOVERED TO PRESET MODES, 10 USER MODES

. USER FRIENDLY OSD DISPLAY FOR MODE IDENTIFICATION /ADJUSTMENT

. MAX. RESOLUTION 1920x1200 NON-INTERLACED AT 60 Hz

. 22.5" COLOR TFT LCD FLAT PANEL

. FULL RANGE POWER SUPPLY 90 – 264 VAC

. CE ENVIRONMENTAL POLICY

. ANTI-GLARE TO REDUCE LIGHT REFLECTION

. POWER MANAGEMENT CAPABILITY

. SOG SUPPORT

. Windows 7/ Windows 7/Vista Premium / Windows 8/ Windows 10 Logo Certification

. SMART CONTROL PREMIUM

. SMARTContrast 1000M:1(LED) Waiting for supplier input

. SMART Image

. PrefectTune II (formerly FGA, FACTORY GAMMA Alignment)

. PHILIPS LOGO displayed while power on

. WEEE REQUIREMENT

. RoHS REQUIREMENT

. EPA 8.0 REQUIREMENT

. CEL G2 REQUIREMENT

CONTENTS

4.1 INPUT SIGNAL CONNECTOR 12
1 FOREWORD 64
2 PRODUCT PROFILE 64
2.1 EDID HEADER 64
2.2 SCANNING FREQUENCIES 65
2.3 AMBIENT TEMPERATURE: 65
3 ELECTRICAL CHARACTERISTICS 66
3.1 INTERFACE SIGNALS 66
3.2 INTERFACE 68
3.3 TIMING REQUIREMENT 70
3.4 HORIZONTAL SCANNING 72
3.5 VERTICAL SCANNING 72
3.6 POWER INPUT CONNECTION 72
3.7 POWER MANAGEMENT 72
3.8 VGA DISPLAY IDENTIFICATION 74
3.9 DVI DISPLAY IDENTIFICATION 74
3.10 HDMI DISPLAY IDENTIFICATION (HDMI : NO MHL FUNCTION) 74
3.11 DP DISPLAY IDENTIFICATION 74
3.12 DDC /CI SUPPORT AND SMART MANAGE/CONTROL 74
3.13 HOT-KEY DEFINITION 74
3.14 SMART CONTRAST SMART CONTRAST IS A KIND OF DYNAMIC BACKLIGHT CONTROL. 74
3.15 SMART IMAGE 74
3.15 PERFECT TUNE 78
1.PER PERFECT TUNE MUST BE DONE AFTER WARMING 30 MINUTES AT LEAST. 78
2.PERFECTTUNE MUST BE PERFORMED AFTER AUTO COLOR. 78
3.PERFECTTUNE MUST BE CONDUCTED THROUGH DVI OR SCALER EMBEDDED PATTERNS. 78
4.DELTA E < 5 78
3.18 AUDIO 78
4 VISUAL CHARACTERISTICS 79
4.1 TEST CONDITIONS 79
4.2 BRIGHTNESS 79
4.3 IMAGE SIZE 79
4.4 BRIGHTNESS UNIFORMITY 79
4.5 CHECK CROSSTALK (S) 79
4.6 COLOR TEMPERATURE ADJUSTMENT 79
5 MECHANICAL CHARACTERISTICS 82
5.1 COSMETIC - 82
5.2 MECHANICAL DATA FILES - 82
5.3 LOCATION OF PHILIPS LOGO - 82
5.4 GAP BETWEEN PANEL AND FRONT BEZEL 82
5.5 LOCATION OF CONTROL ICONS - 82

5.6 COLOR FOR RESIN/PAINT - 82
5.7 FIRE ENCLOSURE REQUEST 82
5.8 RESINS 82
5.9 IF PAINT IS USED 82
5.10 PLASTIC MOLD TOOLING 82
5.11 PLASTICS FLAMMABILITY 82
5.12 TEXTURE/GLOSSING OF HOUSING 82
5.13 TILT AND SWIVEL BASE 83
5.14 KENSINGTON LOCK 83
5.15 LABEL 83
5.16 PRODUCT DIMENSION / WEIGHT (REFER TO PHILIPS APPROVED SHT 191/SHT560) 83
5.17 TRANSPORTATION 83
5.18 PALLET / CONTAINER LOADING (REFER TO PHILIPS APPROVED SHT 560) 84

6 ENVIRONMENTAL CHARACTERISTICS 84

6.1 SUSCEPTIBILITY OF DISPLAY TO EXTERNAL ENVIRONMENT 84
6.2 TRANSPORTATION TESTS 85
6.3 DISPLAY DISTURBANCES FROM EXTERNAL ENVIRONMENT 85
6.4 DISPLAY DISTURBANCES TO EXTERNAL ENVIRONMENT 85

7 RELIABILITY 85

7.1 MEAN TIME BETWEEN FAILURES 85

8 QUALITY ASSURANCE REQUIREMENTS 85

8.1 ACCEPTANCE TEST 85

9 PHILIPS' FLAT PANEL MONITORS PIXEL DEFECT POLICY 86

10 REGULATORY COMPLIANCE 89

10.1 WORLDWIDE REGULATORY 89
10.2 EMC REQUIREMENTS 89
10.3 ROHS 89
10.4 WEEE 89
10.5 ONGOING REGULATORY 89

1 FOREWORD

This specification describes a 22.5" FHD multi-scan color TFT LCD monitor with maximum resolution up to 1920 x 1200 /60Hz non-interlaced. This model uses 250 nits panel.

All optical characteristics are determined according to panel specification after warming up longer than 30 minutes.

2 PRODUCT PROFILE

2.1 EDID header

Data for EDID & .inf file

1	User visible strings on .inf file	Philips 230B8Q (22.5inch Wide LCD MONITOR)
2	Manufacturer ID (EDID data)	PHL
3	Product ID, "xxxx" 4 codes	MSB(byte 12): 09
		LSB (byte 11): 36
4	maximum resolution	1920x1200
5	Horizontal Frequency Range	30~83 KHz
6	Vertical Frequency Range	56~76Hz
7	Monitor Name (13 characters max.)	PHL 230B8

LCD

Suppliers to offer panel specifications.

Panel incoming specification: Follow Philips' specification.

General Features

Active Screen Size	22.5 inches(57.15cm) (Aspect ratio 16:10)
Outline Dimension	499.0(H)mm x 318.7(V)mm x 5.8(UP D)mm / 11.65(DOWN D) mm
Pixel Pitch	0.25425(H)mm x 0.24765(V)mm
Pixel Format	1920(H) x 1200(V) Pixels. RGB stripes arrangement
Color Depth	16.78Million colors , 8 Bit(6 Bit + A-FRC)
Luminance, White	250 cd/m2 (Center 1 Point, Typ.)
Viewing Angle(CR>10)	View angle free (R/L 178(Typ.), U/D 178(Typ.))
Power Consumption	Total 10 W(Typ.), (2.5 W@VLCD , 7.5 W@W/O Driver)
Weight	1696 g (Typ.)
Display Operating Mode	Transmissive mode, normally black
Surface Treatment	Anti-glare treatment of the front polarizer (Haze 25%, 3H)
Color Gamut	72%(Typ.) CIE 1931

4. Optical specification

Optical characteristics are determined after the unit has been 'ON' for 30 minutes in a dark environment at 25±2°C.

Table 10. Optical characteristics Ta=25 °C, V_{LCD}=5.0V, f_V=60Hz, D_{CLK}=154.0MHz, Is=450 mA

Parameter		Symbol	Values			Units	Notes
			Min	Typ	Max		
Contrast Ratio		CR	700	1000	-		1
Surface Luminance	white	L_{WH}	200	250	-	cd/m²	2
Luminance Variation		δ_{WHITE}	75	-	-	%	3
Response Time (Gray to Gray)		T_{GTG_AVR}	-	14	28	ms	4
Color Coordinates [CIE1931] (By PR650)	RED	Rx	Typ -0.03	0.652	Typ +0.03		
		Ry		0.335			
	GREEN	Gx		0.325			
		Gy		0.612			
	BLUE	Bx		0.153			
		By		0.060			
	WHITE	Wx		0.313			
		Wy		0.329			
Viewing Angle (CR>10)							
	x axis, right(ϕ=0°)	θr	85	89	-	Degree	5
	x axis, left (ϕ=180°)	θl	85	89	-		
	y axis, up (ϕ=90°)	θu	85	89	-		
	y axis, down (ϕ=270°)	θd	85	89	-		
Gray Scale		-	-	2.2	-		6

2.2 Scanning frequencies

Hor. : 30 - 83 KHz
Ver. : 56- 76 Hz for DisplayPort
Video dot rate: < 210 MHz for VGA and < 600MHz for HDMI & DP, warning message must be displayed while over 165 MHz (supplier to provide accurate scaler bandwidth number)
Power input: 90-264 V AC, 50/60 ± 2 Hz
Functions:
(1) D-SUB analog R/G/B separate inputs, H/V sync separated, Composite (H+V) TTL level,
(2) SOG sync : a. Sync select: H + V
b. Sync select: SERR
(3) HDMI/DP digital Panel Link TMDS inputs, HDCP supported.

2.3 Ambient temperature:

0 °C - 40 °C

3 ELECTRICAL CHARACTERISTICS

Scaler should be capable of below items.
1) Scaler must support color engine for Image enhancement feature (SmartImage)
2) Scaler must have enough memory to support PerfecTune feature and Philips OSD
3) Scaler must support SmartContras,1000M:1 DCR preferred
4) VGA signal Auto adjustment:

Monitor automatically adjusts and optimizes resolution and frequency based on input signal defined by "Source" function. "NO VIDEO INPUT" message to be displayed on screen while no signal is detected. Monitor will automatically optimize resolution and frequency whenever connected to different signal source. When press the "Auto", the screen also show a status bar. During adjustment period, a status bar will show on screen from 0% to 100% to indicate the progress of adjustment.

Auto auto adjustment : new timing & preset modes (non- factory preset mode) should do auto adjustment at first time detection and save the related date into memory.

Resolution: 640*480,720*400,640*350, 640*400 , do not do auto auto adjustment.

3.1 Interface signals

1). D-Sub Analog

Input signal : Video, Hsync., Vsync
Video : 0.7 Vp-p, input impedance, 75 ohm @DC
Sync. : Separate sync TTL level , input impedance 2.2k ohm terminate
Hsync Positive/Negative
Vsync Positive/Negative

Composite sync TTL level, input impedance 2.2k ohm terminate (Positive/Negative)

Sync on green video 0.3 Vp-p Negative (Video 0.7 Vp-p Positive)

2). DP/DVI Digital

Input signal: Single TMDS link (Three channels: RX0-/+, RX1-/+, RX2-/+)

3) HDMI (NO MHL)

TMDS channel:
Carries audio, video and auxiliary data.
Signaling method: According to DVI 1.0 specification.
Single-link (Type A HDMI).
Video pixel rate: 25 MHz to 600MHz (Type A)
Pixel encodings: RGB 4:4:4, YCbCr 4:2:2, YCbCr 4:4:4.
Audio sample rates: 32 kHz, 44.1 kHz, 48 kHz
Audio channels: **2.**

DDC channel:
Allows source to interrogate capabilities of sink.
I²C signaling with 100 kHz clock.
E-EDID data structure according to EIA/CEA-861D and VESA Enhanced EDID.

Content protection:
According to High-Definition Content Protection (HDCP) Specification 1.10.

HDMI video input should support timing defined in **CEA 861-D** specification with extended EDID blocks

Video Timing Support

Format	Resolution	Type	Vertical frequency
480p/480i	720 x 480	SD	60Hz
576p/576i	720 x 576	SD	50Hz
720p	1280 x 720	HD	50Hz , 60Hz
1080p	1920 x 1080	HD	50Hz, 60Hz

Picture centering - H & V ≤ 0.5 %. (for TV, 480p/480i, 576p/576i, 720p, 1080p)

Over Scan:

HDMI mode

1. RGB signal : OFF (Be use and set ON/OFF)
2. YUV signal : OFF (Be use and set ON/OFF)
3. YUV-1080p: OFF (Be use and set ON/OFF)

PS：RGB、YUV、YUV 1080P over scan flag

PC timing: to follow PC timing table

TMDS/+5V/DDC/HPD/CEC Signals

(TMDS Signal)

Termination Supply Voltage AV_{CC}:	3.3V±5%
Differential Voltage Level :	150mV – 1200mV
Common Mode Voltage :	(AV_{CC} – 300mV) – (AV_{CC} – 37.5mV)
Differential Sensitivity :	150mVp-p
Maximum differential Voltage :	1560mVp-p

(+5V Power)

Power Supply Voltage :	4.7V – 5.3V
Maximum Current Consumption :	50mA

(DDC Signal)

Maximum Capacitance :	50pF

(HPD Signal)

High Voltage Level :	2.4V – 5.0V
Low Voltage Level :	0 – 0.4V
Output Resistance :	1KΩ±20%

(CEC Signal, not supported by this model)

Input Low Voltage :	< 0.8V
Input High Voltage :	> 2.0V
Output Low Voltage:	0 – 0.4V
Output High Voltage:	2.5V – 3.6V
Pull-up Resistor:	2.7KΩ±10%
Leakage Current in standby/off :	< 1.8uA
Maximum Capacitance:	100Pf

4). USB Hub 3.0(BC1.2 x2) (NO support)

USB port: 2 Downstream(USB3.0(BC1.2 x2)

5). Audio

Input signal: 1Vrms

Loudspeaker: 7.0 W+ 7.0 W stereo of RMS Power

Frequency range: (WAIT FOR SUPPLIER INPUT)

Headphone connection will mute speakers

3.2 Interface

3.2.1 D-Sub Cable

Length : 1.8 M +/- 50 mm
Fix with monitor when packing, with transplant pin protective cover.

Connector type : D-Sub male with DDC2B pin assignments.
Blue connector thumb-operated jack screws

Pin assignments:

PIN No.	SIGNAL
1	Red
2	Green/ SOG
3	Blue
4	Sense (GND)
5	Cable Detect (GND)
6	Red GND
7	Green GND
8	Blue GND
9	DDC +3.3V or +5V
10	Logic GND
11	Sense (GND)
12	Bi-directional data
13	H/H+V sync
14	V-sync
15	Data clock

3.2.1 DVI Cable

The input signals are applied to the display through DVI-D cable.
Length : 1.8 M +/- 50 mm
Connector type : DVI-D male with DDC-2B pin assignments
White connector thumb-operated jackscrews
With transplant pin protective cover.

Pin Assignment:

Pin No.	Description
1	T.M.D.S. data2-
2	T.M.D.S. data2+
3	T.M.D.S. data2 shield
4	No Connect
5	No Connect
6	DDC clock
7	DDC data
8	No Connect
9	T.M.D.S. data1-
10	T.M.D.S. data1+
11	T.M.D.S. data1 shield
12	No Connect
13	No Connect
14	+5V Power
15	Ground (for +5V)
16	Hot plug detect
17	T.M.D.S. data0-

18	T.M.D.S. data0+
19	T.M.D.S. data0 shield
20	No Connect
21	No Connect
22	T.M.D.S clock shield
23	T.M.D.S. clock+
24	T.M.D.S. clock-

3.2.2 HDMI (NO MHL)

The input signals are applied to the display through HDMI cable.
Length : Please refer to M3 cable bundle summary file
Connector type : HDMI male with DDC-2B pin assignments
White connector thumb-operated jackscrews
With transplant pin protective cover.

Pin Assignment:

Pin No.	Description
1	TMDS Data2+
2	TMDS Data2 Shield
3	TMDS Data2–
4	TMDS Data1+
5	TMDS Data1 Shield
6	TMDS Data1–
7	TMDS Data0+
8	TMDS Data0 Shield
9	TMDS Data0–
10	TMDS Clock+
11	TMDS Clock Shield
12	TMDS Clock–
13	CEC
14	Reserved (HDMI 1.0-1.3c), HEC Data- (Optional, HDMI 1.4+ with Ethernet)
15	SCL (I^2C Serial Clock for DDC)
16	SDA (I^2C Serial Data Line for DDC)
17	DDC/CEC/HEC Ground
18	+5 V Power (max 50 mA)
19	Hot Plug Detect (All versions) and HEC Data+ (Optional, HDMI 1.4+ with Ethernet)

3.2.3 DP

The input signals are applied to the display through DP cable.
Length : 1.8 M +/- 50 mm
Connector type : DP male with DDC-2B pin assignments
White connector thumb-operated jackscrews
With transplant pin protective cover.

Pin Assignment:

PIN No.	SIGNAL
1	ML_Lane 3(n)
2	Ground
3	ML_Lane 3(p)
4	ML_Lane 2(n)
5	Ground
	ML_Lane 2(p)

7	ML_Lane 1(n)
8	Ground
9	ML_Lane 1(p)
10	ML_Lane 0(n)
11	Ground
12	ML_Lane 0(p)
13	Ground
14	Ground
15	AUX_CH (P)
16	Ground
17	AUX_CH (N)
18	Hot Plug Detect
19	Return DP_PWR
20	DP_PWR

3.3 Timing requirement

Factory Preset mode definition:

1. Perfect FOS while presenting those timings.
2. Will specify those timing in User's Manual

Preset mode definition:

1. Need to support those timings.
2. Perfect FOS after auto adjustment.

User mode

1. Can save those timing that not in Preset mode and can be showed (not over scaler or Panel spec.)
2. It needs to reserve the 10 timings space in memory size.

3.3.1 Mode storing capacity

Factory preset modes : Refer to Timing table_

11_M3 M4 M5 M6 M7 M8 Timing table_

preset modes : Refer to Timing table
User modes : Refer to Timing table

Timing pixel clock over H/W limitation do not support.

Factory preset modes (D-sub15 modes)

1. Factory modes and preset modes are defined in the enclosed timing table file

Attachment files : Refer to Timing table

2. Video timing mode (internal firmware support)
   60Hz: 480p/720p/1080i/1080p
   50Hz: 576p/720p/1080i/1080p

3.3.3 Software control functions via OSD / control adjustable functions:

ITEM			

1	OSD DEFINITIONS	M8 OSD Button definition _ 20190 PS: M8 OSD Button definition.xlsx put on the other file.	Reset - No: Exit Yes: Auto adjustment for displaying timing mode and recall factory preset
2	OSD LANGUAGES	12_OSD_String_M4_M5_20170623.xls	English, French, German, Spanish, Italian, Russian, Simplified Chinese,Portuguese… (21)
3	OSD TREE	Attachment files : Refer to OSD TREE PHILIPS 230B8QJEB OSD	
4	POWER ON LOGO	Placing_Scaling_Shield_forMMD_2014	Power On Logo: Power On → Show up Philips logo 3 seconds → Change to input signal. This picture is reference only. The official drawing will send out by PM.
5	Audio Selection	Stand-alone – On: Isolate video and audio control input Stand-alone – Off: Integrate video and audio control input Mute – On: Turn off audio Mute – Off: Turn on audio	

3.4 Horizontal scanning

Sync polarity : Positive or Negative
Scanning frequency : 30 – 83 K Hz

3.5 Vertical scanning

Sync polarity : Positive or Negative
Scanning frequency : 50- 76Hz for HDMI

PS : Item 3.4 and 3.5 , as far as possible to be display (another Horizontal and Vertical)

3.6 Power input connection

Power cord length : please refer to M3 cable bundle summary file
Power cord type : 3 leads power cord with protective earth plug.

3.7 Power management

The monitor must comply with the Microsoft On Now specification, and meet EPA<43 KWH/year requirements.

Mode	HSYNC	VSYNC	Video	Pwr-cons.	Indication	Rec. time
Power-On	On	On	Active	16.2W (typ.) < 22W(max.)	White LED	Note 2
Standby power Saving	Off	Off	Blanked	< 0.3 W	Blinking white LED Period 3ec on, 3sec off (In Smile LED)	Note 1 Note 2
DC Power Off			N/A	< 0.3 W	LED Off	No USB HUB.

Note 1 : No Audio and USB HUB connect.

a. D-SUB mode,
Normal mode to Power saving mode: 19/s (typ.)
Power Saving to Normal mode: 7s, (typ.)
timing change : 5/s (typ.)
Source change : 5/s (typ.)
Power On time（include resolution show time）: 13s

b. DVI mode :,
Normal node to Power saving mode: 19/s(Max.)
DVI Power Saving to Normal mode: 7/s (Max.)
timing change : 5/s (Max.)
Source change : 5/s(Max.)
Power On time（include resolution show time）: 13s(Max.)
c. AC OFF→ ON , POWER LED ON : 5/s (Max.)

AC OFF→ ON , DISPLAY ON : 12/s (Max.)
ADJ BAR DISPLAY : 5/s(Max.) AFTER OFF

C. HDMI mode :,
Normal mode to Power saving mode: 19/s(typ.)
Power Saving to Normal mode: 7/s (typ.)
timming change : 5/s (typ.)
Source change : 5/s (typ.)
Power On time（include resolution show time）: 13s
c. AC OFF→ ON , POWER LED ON : 4/s(typ.)
AC OFF→ ON , DISPLAY ON : 12/s(typ.)
ADJ BAR DISPLAY : 5/s(typ.) AFTER OFF

Note 2 : Measurement power Saving.

measureme Power consu
power savi measure the

Note 3 :

PS: Smart Image Economy mode: < EPA8.0 spec. (Brightness=20%) EPA 8.0 spec. as below

Panel size	Native resolution	Max. Power (W)
16"(16:9)	1366x768	14.5
17"(4:3)	1280x1024	21.9
17"(16:10)	1440x900	21.2
18.5"(16:9)	1366x768	16.6
19"(16:10)	1440x900	22.7
19"(4:3)	1280x1024	23.6
20"(16:10)	1680x1050	28
20"(16:9)	1600x900	24.5
22"(16:10)	1680x1050	30
22"(16:9)	1920x1080	31.6
23"(16:9)	1920x1080	32.9
24"(16:10)	1920x1200	36.8
24"(16:9)	1920x1080	34
27"(16:9)	1920x1080	37.2

EPA8.0:
Power SPEC: <45.08 W for Enhanced-Performance Display on 38.4%，power saving：0.3W，power OFF：0.3W

Note 4 :
No USB HUB connect.

3.7.2 CEL Label Specification:

CELGrade : G2
CEL Limit→ Energy efficiency:1.5cd/W；Saving mode：0.5W；Off mode: 0.5W

3.7.3 EEI （For European Union）power consumption spec

Item	能耗模式	Power consumption	AnnualEnergy Consumption	等级

1	开机功耗（动态态画面测试）	<23W	<34KWH	A<0.38
2	待机模式功耗	<0.3W		
3	关闭模式功耗	<0.3W		

3.7.4 MEPS (For Australia and Newland)power consumption spec

This Standard specifies the minimum energy performance standards (MEPS) and energy rating label requirements for computer monitors.
Test method and specification as below

Item	能耗模式	Power consumption	CEC 值	星级
1	开机功耗（动态态画面测试）	<15.5W	<71 KWH	5.5 星
2	待机模式功耗	<0.3W		
3	关闭模式功耗	<0.3W		

3.8 VGA Display identification

In accordance with VESA Display Channel Standard Ver.1.0 and DDC 2B capability

3.9 DVI Display identification

3.10 HDMI Display identification (HDMI : No MHL function)

In accordance with DVI requirement (DDWG digital Visual Interface revision 1.0)

use DDC-2B, DDC/CI, and EDID V1.3

3.11 DP Display identification

3.12 DDC /CI Support and Smart Manage/Control

In accordance with VESA DDC/CI and MCCS ver.2.0, the monitor should be workable with , Philips Smart Manage, Smart Control v1.4.0.5, and Portrait Display Tune at least.

3.13 Hot-key definition

Refer to hot-key definition

3.14 Smart contrast Smart Contrast is a kind of dynamic backlight control.

This function changes the panel backlight dynamically according to the frame brightness histogram.
At least the minimum contrast ratio has to be > 50M:1 (Typ.)

3.15 Smart image

SmartImage Profile Definitions(M2).doc

3.16.1 Smart Image OSD outlook

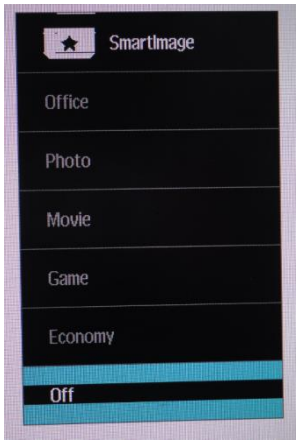

3.15.1.1 Position

The position of the button is at the bottom center of the screen.

3.15.1.2 Smart Image Logo & Banner

As design to keep the Light Frame logo at header but change the name to "Smart Image" with bitmap format.

3.15.1.3 Icon of each profile

Each profile will use text instead of icon & text before.

3.15.1.4 User Operation Procedure

A. 5 different modes are switched to next in the sequence from 1 to 5 then back to 1 while pressing this button: 1) Office Work 2) Image Viewing 3) Entertainment 4) Economy 5) Off. The default setting is 'Off".

B. The FOS optimization will be changed in real time by which profile to be scrolled, users don't need to confirm to enable.

C. The Smart Image OSD will remain on screen for 5 seconds after user last action. Or user can also press [MENU] to close the Smart Image OSD immediately.

D. Except using [MENU] button to scroll down profile. If Smart Image OSD already launched onscreen. User is allowed to use up/down key to choose profile and press [MENU] to confirm selection and close the Smart Image OSD.

The Smart Image status will also be stored after the monitor is resumed from AC on/off or power switch on/off.

3.15.1.5 Linkage between Smart Image OSD and main OSD

A. Settings within main OSD have linkage with Smart Image OSD.

i. Brightness

ii. Contrast

iii. Color Temperature

B. Because each preset profiles will define default setting of these 3 parameters. Users can understand what is the value of that in preset profile by open the main OSD.

C. When any Smart Image Lite profile had been enabled. The parameters in main OSD are still available for user to adjust. But these adjustments are temporary only. If users switch to another profile and then go back. The setting in main OSD will be store values of that Smart Image profile enabled.

3.15.1.6 Profile Definitions (system integrators to input at

design stages)

A. Text

Text Funct definition

B. Office

i. Purpose: Design for general office application, like word processing, Spreadsheet and email. The screen is dominated by text.

ii. Enhancement point:

1. A little sharpness for increasing the details of e.g. an excel grid.
   No other type of enhancement as it won't bring value.
2. Color temperature remains in 6500°K.
3. Brightness level should be 70%.
4. Smart Contrast set to “Off”.

C. Movie

i. Purpose: Design for video application, Like Microsoft Media Player or Real Player. The screen is dominated by video.

ii. Enhancement Point:

1. Dynamic contrast enhancement by histogram analysis (DLC) should be implemented.
2. Sharpness enhanced 90%.
3. Color enhancement set as the same with Video.
4. Color temperature set to 7500° (Based on final PQ settings) (if higher)
5. Brightness level sets to maximum.
6. Fastest response time. (N/A for this model)
7. Smart Contrast set to “On”
8. Gamma set to 2.4

D. Photo

i. Purpose: Design for image viewing application, especially in slide show. The screen is dominated by picture. Power point presentation could use this profile also.

ii. Enhancement Point:

1. Dynamic contrast enhancement by histogram analysis (DLC) should be off.
2. Sharpness and color to be enhanced 75%.
3. Color temperature 6500°K=
4. Brightness level sets to maximum.
5. Smart Contrast set to “Off”.

E. Economy

i. Purpose: Adjust brightness level for reducing power consumptions

ii. No optimization by Smart Image.

iii. Design:
1. Brightness level set to 20, a little higher brightness level than laptop PC, fine tune brightness level before DVT exit.
2. Color temperature set to 6500K.
3. Gamma Table set to 2.2.

F. Game

i. Purpose: Design for video application, Like Microsoft Media Player or Real Player. The screen is dominated by video.

ii. Enhancement Point:
1. Dynamic contrast enhancement by histogram analysis (DLC) should be implemented.
2. Sharpness enhanced 90%.
3. Color enhancement set as the same with Video.
4. Color temperature set to User Define (if higher)
5. Brightness level sets to maximum.
6. Fastest response time. (N/A for this model)
7. Smart Contrast set to "On"
8. Gamma set to 2.2

G. Off

i. Purpose: No optimization by Smart Image.

ii. Design:
1. This will follow user OSD setting. If any change by user, it will be saved. When switch back from other Smart Image profiles, it will go back to last saved setting.
2. Gamma Table is turn on to reduce bad color tracking.

3.15.1.7 Demo mode

A. Purpose: Built-in demo mode for sales in-store demo.

B. Design:

i. Dynamically split screen to 2 vertical frames with one vertical white line. The line width is 2 pixels. The left frame will be enhanced by Smart Image Lite and right frame remains original performance.

ii. There is OSD showing "Smart Image On / Smart Image Off" in left frame and "Original Image" in right frame.

iii. The OSD word color is white with transparent background.

iv. The demo profile will be "Video Playback" profile with "High" ODC setting.

C. Hot keys to trigger:

Press [Smart Image] 8 seconds or more to trigger the demo mode.
When demo mode is On, press 8 seconds or more to turn off the demo mode.
When the demo mode is enabled, the white LED

3.15 Perfect Tune

1.PER PERFECT TUNE MUST BE DONE AFTER WARMING 30 MINUTES AT LEAST.
2.PERFECTTUNE MUST BE PERFORMED AFTER AUTO COLOR.
3.PERFECTTUNE MUST BE CONDUCTED THROUGH DVI OR SCALER EMBEDDED PATTERNS.
4.DELTA E < 5

3.18 Audio

3.18.1 Frequency Response

The amplifier and speaker combination shall provide a frequency response of 300 Hz to 20 kHz, with +/- 3 dB variation over the entire response range.

3.18.2 Total Harmonic Distortion

Total harmonic distortion shall be limited to 5% THD at the maximum wattage speaker rating specified in section 1.3, at 1 kHz, when the input is 1.0Vrms.

3.18.3 Power Handling

Each speaker transducer shall accept up to the specified Wattage of audio power without damage or exceeding the frequency response and total harmonic distortion specifications.

3.18.4 Audio Amplifier

The amplifier shall provide two channels of audio up to 2.0 Watts per channel from 100 Hz to 20 kHz, based upon an audio signal input of 1.0V RMS per channel.

3.18.5 Volume Control

For monitors with a manual volume control, the direction (at the bottom) of the bezel volume control is "-" key for Minimum volume and "+" key for Maximum volume. The default shipping position of the Volume Control shall be approximately 80%.

3.18.6 Speaker Sensitivity

The speakers shall support a minimum sensitivity of 75 dB +/- 3 dB at 3W/1m at 1 kHz.

3.18.7 Maximum Audio Card Output

The monitor audio amplifier shall accept a maximum input voltage of 1.5 Vrms and meet the following requirements at the maximum monitor volume setting:

1. The ratings of the audio amplifier may not be exceeded.
2. The ratings of the speakers may not be exceeded.
3. There must not be any clipping of the audio amplifier output signal.

Voltage dividers may be used to reduce the input signal level.

3.18.8 Monitor Audio Amplifier Input Impedance

The monitor audio amplifier shall have minimum 10K Ohm AC input impedance

P.S This charging spec for test reference. Mobile phone and pad device charging current method need in accordance with brand charge software setting.

4 VISUAL CHARACTERISTICS

4.1 Test conditions

Unless otherwise specified, this specification is defined under the following conditions.

(1) Input signal : As defined in 3.3, follow panel resolution, signal sources must have 75 ohm output impedance.

(2) Luminance setting : controls to be set to brightness 100% with full screen 100 % duty cycle white signal

(3) Warm up: more than 30 minutes after power on with signal supplied.

(4) Ambient light: 400 -- 600 lux.

(5) Ambient temperature: 20 ± 5 °C

4.2 Brightness

Follow Panel specification.

4.3 Image size

Actual display size : Follow panel spec.

4.4 Brightness uniformity

Set contrast at 100% and turn the brightness 100% at centre of the screen.
Apply the Fig 1, it should comply with the following formula:

$$\frac{(B_max - B_min)}{B_max} \times 100\% > 75\%$$

Where B_max = Maximum brightness
B_min = Minimum brightness

4.5 Check Cross talk (S)

Apply Pattern 2. Set contrast and brightness at 100 %.
Measure YA. Then output Pattern 3 and measure YB.
the cross talk value :

$$\frac{ABS(YA - YB)}{YA} \times 100\% < 1.5\%$$

4.6 Color temperature adjustment

There are six factory preset white color 11500K,9300K,8200K,7500K 6500K,5000K

Apply full white pattern, with brightness in 100 % position and the contrast control at 50 % position.

The 1931 CIE Chromaticity (color triangle) diagram (x ,y) coordinate for the screen center should be:

Product specification

CIE coordinates	(x,y)	
11500K	x = 0.270 ± 0.02 y = 0.281 ± 0.02	PerfecTune II
9300K	x = 0.283 ± 0.02 y = 0.297 ± 0.02	PerfecTune II
8200K	x = 0.291 ± 0.02 y = 0.306 ± 0.02	PerfecTune II
7500K	x = 0.298 ± 0.02 y = 0.314 ± 0.02	PerfecTune II
6500K/sRGB	x = 0.313 ± 0.02 y = 0.329 ± 0.02	PerfecTune II
sRGB	x = 0.313 ± 0.02 y = 0.329 ± 0.02	PerfecTune II
5000K	x = 0.345 ± 0.02 y = 0.357 ± 0.02	PerfecTune II

Production alignment spec.

CIE coordinates	(x,y)	
11500K	x = 0.270 ± 0.006 y = 0.281 ± 0.006	PerfecTune II
9300K	x = 0.283 ± 0.006 y = 0.297 ± 0.006	PerfecTune II
8200K	x = 0.291 ± 0.006 y = 0.306 ± 0.006	PerfecTune II
7500K	x = 0.298 ± 0.006 y = 0.314 ± 0.006	PerfecTune II
6500K/sRGB	x = 0.313 ± 0.006 y = 0.329 ± 0.006	PerfecTune II
sRGB	x = 0.313 ± 0.006 y = 0.329 ± 0.006	PerfecTune II
5000K	x = 0.345 ± 0.006 y = 0.357 ± 0.006	PerfecTune II

Quality Inspection specification:

CIE coordinates	(x,y)	
9300K	x = 0.283 ± 0.015 y = 0.297 ± 0.015	
6500K/sRGB	x = 0.313 ± 0.015 y = 0.329 ± 0.015	
sRGB	x = 0.313 ± 0.015 y = 0.329 ± 0.015	

5 MECHANICAL CHARACTERISTICS

5.1 Cosmetic -

Philips ID

5.2 Mechanical data files -

ProE files required

5.3 Location of Philips logo -

Per Philips make-up sheet

5.4 Gap between panel and front bezel

< 1.2mm (Typ.)

5.5 Location of Control icons -

Per Philips Graphic sheet

5.6 Color for resin/paint -

Per Philips make-up sheet

5.7 Fire enclosure request

Shielding Cover should fulfill international standard

5.8 Resins

RoHS required

WEEE required.

Resin type/selection refer to Project Book Section 7.2 Plastic material.

5.9 If paint is used

RoHS required

WEEE require

If new painting type need to implement, refer to UN-D 1235.

5.10 Plastic mold tooling

Tooling to be designed to minimize cosmetic defects induced by molding process (sink, blush, weld lines, gate marks, ejector marks, etc.). Refer to "TYV61-90007".

Painting to cover up cosmetic defects due to molding is strongly discouraged.

China RoHS mark requested.

5.11 Plastics flammability

— All Plastics to be Flame Retardant UL 94-HB or Better.

Base / Pedestal to be Flame Retardant UL 94-HB.

All major plastic parts (bezel, back cover) need to be molded from same resin.

Plastic resin type selection should be referred to "plastic-Philips Pool monitor".

5.12 Texture/Glossing of housing

The texture area and texture no should follow Philips make-up sheet.

The exterior surfaces shall have a uniform texture.

Philips must approve the mold texturing.

Detail document for texture refer to "UN-D249", "UN-D 600".

< = 20 gloss units

5.13 Tilt and swivel base

Tilt angle : -5 ° +2/- 0 ° (forward)

+20 °+ 0/- 3 ° (backward)

Swivel angle : nil

High Adjustment : nil

Portrait Display : nil

5.14 Kensington Lock

Must meet Kensington_slot.spec "TYE-M0004".

MMD request metal plate in Kensington hole.

5.15 Label

Regulatory label / Carton label should follow Philips requirement.

China RoHS label

Detail document refer to Philips Engineering Reference Book.

5.16 Product dimension / Weight (Refer to Philips approved SHT 191/SHT560)

Unit dimension :

Packed unit dimension:

Net weight :

Gross weight :

5.17 Transportation

Transportation standards refer to UAN-D1534/00/01/02.

5.17.1 Transportation packages

Net weight Packaging and wrapping shall be sufficient to protect the product against damage or loss during shipment from the supplier to the destination specified in the purchase order.

All packaging materials are subject to test and evaluation per UAN-D1534/00/01/02.

The cushion material shall be constructed using EPS material.

The doggy hole is requested.

5.17.2 Transportation Test_

Overall tests refer to UAN-D1534/00/01/02.
Vibration, drop test should be performed at ambient temperature (20°C to 23°C) and relative humidity (40% to 65%).

A. Transportation test specification for all regions

Package test

1. Random Vibration test

2. Drop test
3. Cold Drop test (for design reference)

Un-package test

1. Half sine shock test (non operation)

B. Transportation test specification for China/India

Package test

1. Random Vibration test
2. Drop test
3. Cold Drop test (for design reference)

Un-package test

1. Sine vibration (operating)
2. Half sine shock test (non operation)

5.18 Pallet / Container loading (Refer to Philips approved SHT 560)

Transportation standards refer to TYE-M0002 ,UAN-D1534 and UAW-0309.
Air shipment -

Sea container 20'(pallet/slip sheet)

Sea container 40'(pallet/slip sheet)

Sea container 40' High Cube (pallet/slip sheet)

Land 45\` Truck and Trailer (800X1200mm pallet)

Land \` Truck and Trailer (1000X1200mm pallet) for UK

Truck shipment-

Transportation request for all regions except China/India

A. Air shipment

B. 20'/40'/40'HQ Container loading for WW

Transportation request for China and India

A. Container loading for China and India

B. Truck loading

Transportation request for EU

A. Land 45\` Truck and Trailer (800X1200mm pallet)

B. Land 45\` Truck and Trailer (1000X1200mm pallet) for UK

6 ENVIRONMENTAL CHARACTERISTICS

The following sections define the interference and susceptibility condition limits that might occur between external environment and the display device.

6.1 Susceptibility of display to external environment

Operating

- Temperature : 0 to 40 degree C
- Humidity : 80% max
- Altitude : 0-3658m
- Air pressure : 600-1100 mBAR

Storage

- Temperature : -20 to 60 degree C
- Humidity : 95% max
- Altitude : 0-12192m
- Air pressure : 300-1100 mBAR

Note: recommend at 5 to 35°C, Humidity less than 60 %

6.2 Transportation tests

Refer to 5.15.2

6.3 Display disturbances from external environment

According to IEC 801-2 for ESD disturbances

6.4 Display disturbances to external environment

7 RELIABILITY

7.1 Mean Time between Failures

In X/C/E/M/V line System MTBF (Excluding the LCD panel and CCFL) : 50,000 hours
In P/B/S line System MTBF (Excluding the LCD panel and CCFL) : 70,000 hours

8 QUALITY ASSURANCE REQUIREMENTS

8.1 Acceptance test

According to MIL-STD-1916D Control III level

AQL: NA
(Please also refer to annual quality agreement)
Customer acceptance criteria: UAW0377/00

9 PHILIPS' FLAT PANEL MONITORS PIXEL DEFECT POLICY

Philips' Flat Panel Monitors Pixel Defect Policy

BRIGHT DOT DEFECTS	**ACCEPTABLE LEVEL**		
MODEL	271B8/S8		
1 lit sub-pixel	3		
2 adjacent lit sub-pixels	1		
3 adjacent lit sub-pixels (one white pixel)	0		
Distance between two bright dots	15mm		
Bright dot defects within 20 mm circle	0		
Total bright dot defects of all type	3		

BLACK DOT DEFECTS	**ACCEPTABLE LEVEL**		
MODEL	271B8/S8		
1 dark sub-pixel	5		
2 adjacent dark sub-pixels	2		
3 adjacent dark sub-pixels (one white pixel)	1		
Distance between two black dots	15mm		
Black dot defects within 20 mm circle*	1		
Total black dot defects of all type	5		

TOTAL DOT DEFECTS	**ACCEPTABLE LEVEL**		
MODEL	271B8/S8		
Total bright or black dot defects of all type	5		

Fig 1: Measurement locations of Brightness Uniformity

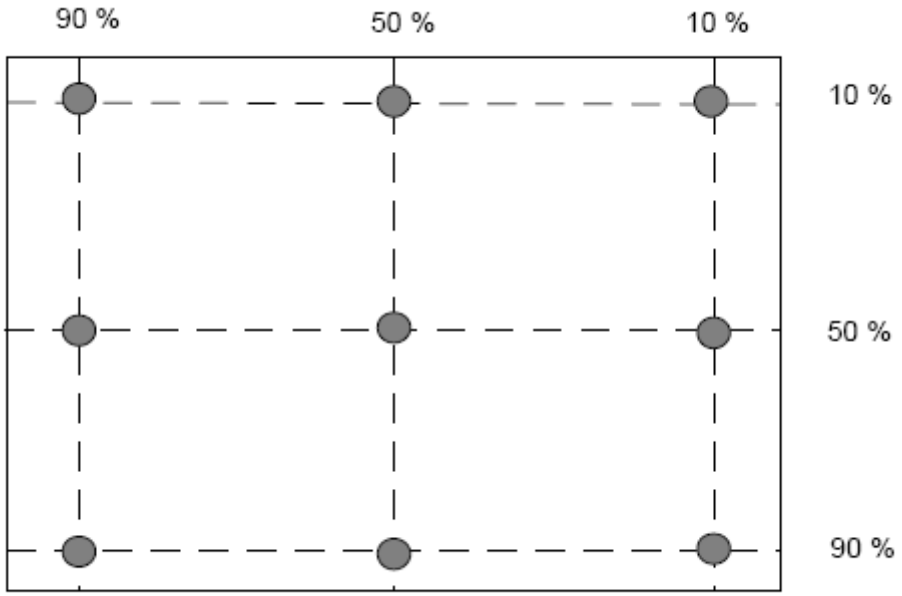

Fig 2: Cross talk pattern
Gray level 46 (64 Gray level)

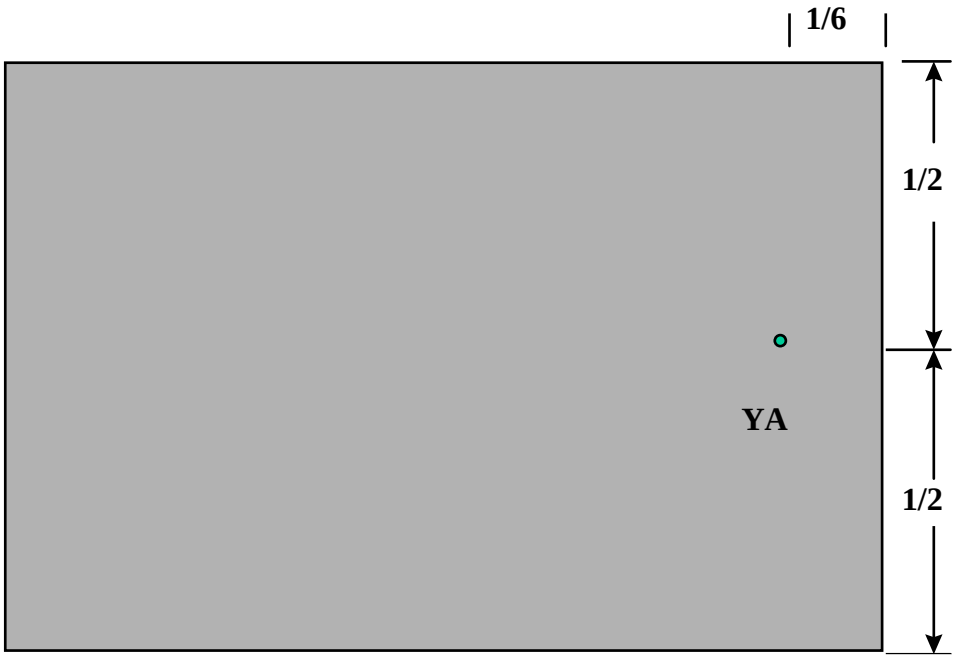

Fig 3: Cross talk Pattern
Center at Gray level 0 (Black)

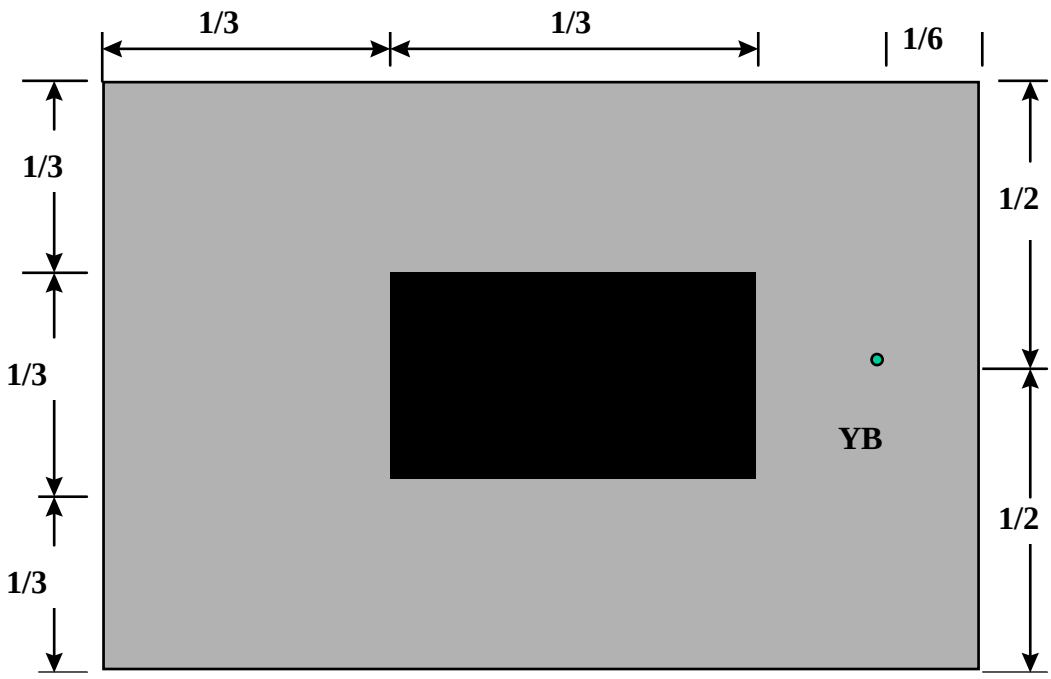

10 REGULATORY COMPLIANCE

10.1 Worldwide Regulatory

W W _ R e g u l

10.2 EMC Requirements

Supplier DVT EMI test result must be submitted prior to DVT samples delivery, and PVT EMI test result must be submitted again prior to PVT samples delivery, which also has to meet Philips' immunity testing specification.

10.3 RoHS

Restriction on the use of certain hazardous substances.
Lead, Cadmium, Mercury, Hexavalent Chromium, Poly brominated Bipheny1 (PBB) and Poly brominated Bipheny1 Ether (PBDE)(flame retardant).

10.4 WEEE

Producers (Philips) responsible for retailer take back schemes and recycling.
--System implemented.
--Collection and recycle targets.

10.5 Ongoing Regulatory

There's a possibility that other regulatory certificates will be required during the life of the product. It is the responsibility of the supplier to provide related documentation.