DCR-PC6E/PC9/PC9E

RMT-814

SERVICE MANUAL

Level 2

Ver 1.0 2001. 05

Self Diagnosis Supported model

Digital Handycam

InfoLITHIUM TM M SERIES

Cassette Memory

MEMORY STICK

Photo : DCR-PC9E
RMT-814

US Model
Canadian Model
Korea Model
DCR-PC9
AEP Model
UK Model
DCR-PC6E/PC9E
E Model
Hong Kong Model
Tourist Model
DCR-PC9/PC9E
Australian Model
Chinese Model
DCR-PC9E

J MECHANISM

On the VC-265/265A board

This service manual provides the information that is premised the circuit board replacement service and not intended repair inside the VC-265/265A board.
Therefore, schematic diagram, printed wiring board, waveforms, parts location and electrical parts list of the VC-265/265A board are not shown.
The following pages are not shown.

Printed wiring board ..... Pages 4-15 to 4-18
Schematic diagram ..... Pages 4-19 to 4-54
Waveforms and parts location ..... Pages 4-74 to 4-77
Electrical parts list ..... Pages 6-13 to 6-24

For MECHANISM ADJUSTMENTS, refer to the "DV MECHANICAL ADJUSTMENT MANUAL Ⅵ J MECHANISM " (9-929-807-11).

NTSC model : DCR-PC9
PAL model : DCR-PC6E/PC9E

SPECIFICATIONS

Video camera recorder

System

Video recording system
2 rotary heads
Helical scanning system
Audio recording system
Rotary heads, PCM system
Quantization: 12 bits (Fs 32 kHz, stereo 1, stereo 2), 16 bits (Fs 48 kHz, stereo)
Video signal
DCR-PC9:
NTSC color, EIA standards
DCR-PC6E/PC9E:
PAL colour, CCIR standards
Usable cassette
Mini DV cassette with the Mini DV mark printed
Tape speed
SP: Approx. 18.81 mm/s
LP: Approx. 12.56 mm/s
Recording/playback time (using cassette DVM60)
SP: 1 hour
LP: 1.5 hours
Fastforward/rewind time (using cassette DVM60)
Approx. 2 min. and 30 seconds
Viewfinder
Electric viewfinder (colour)
Total dot number:
DCR-PC9/PC9E: 180 000 (800 × 225)
DCR-PC6E: 113 578 (521 × 218)
Image device
4.5 mm (1/4 type) CCD
(Charge Coupled Device)
DCR-PC9:
Approx. 680 000 pixels
(Effective: 340 000 pixels)
DCR-PC6E/PC9E:
Approx. 800 000 pixels
(Effective: 400 000 pixels)
Lens
Carl Zeiss
Combined power zoom lens
Filter diameter 30 mm. (1 3/16 in.)
10× (Optical), 120× (Digital)
Focal length
3.3 - 33 mm (5/32 - 1 5/16 in.)
When converted to a 35 mm still camera 42 - 420 mm (1 11/16 - 16 5/8 in.)
Colour temperature
Auto, HOLD (Hold), Indoor (3 200K), Outdoor (5 800K)
Minimum illumination
5 lx (lux) (F 1.7)
0 lx (lux) (in the NightShot mode)*
* Objects unable to be seen due to the dark can be shot with infrared lighting.

Input/Output connectors

S video input/output (DCR-PC9/PC9E)
S video output (DCR-PC6E)
4-pin mini DIN
Luminance signal: 1 Vp-p, 75 Ω (ohms), unbalanced, sync negative
Chrominance signal:
DCR-PC9: 0.286 Vp-p,
DCR-PC6E/PC9E: 0.3 Vp-p
75 Ω (ohms), unbalanced
Audio/Video input/output (DCR-PC9/PC9E)
Audio/video output (DCR-PC6E)
AV MINI JACK, input/output auto switch
Video signal: 1 Vp-p, 75 Ω (ohms), unbalanced, sync negative
Audio signal: 327 mV, (at output impedance more than 47 kΩ (kilohms))
Input impedance with more than 47 kΩ (kilohms)
Output impedance with less than 2.2 kΩ (kilohms)
DV input/output (DCR-PC9/PC9E)
DV output (DCR-PC6E)
4-pin connector
Headphone jack
Stereo minijack (ø 3.5 mm)
LANC jack
Stereo mini-minijack (ø 2.5 mm)
USB jack (DCR-PC9/PC9E only)
mini-B

— Continued on next page —

Mini DV Digital Video Cassette

DIGITAL VIDEO CAMERA RECORDER

SONY®

1. SELF-DIAGNOSIS FUNCTION

When problems occur while the unit is operating, the self-diagnosis function starts working, and displays on the viewfinder or LCD screen what to do. This function consists of two display; self-diagnosis display and service mode display.
Details of the self-diagnosis functions are provided in the Instruction manual.

2. SELF-DIAGNOSIS DISPLAY

When problems occur while the unit is operating, the counter of the viewfinder or LCD screen consists of an alphabet and 4-digit numbers, which blinks at 3.2 Hz. This 5-character display indicates the “repaired by:”, “block” in which the problem occurred, and “detailed code” of the problem.

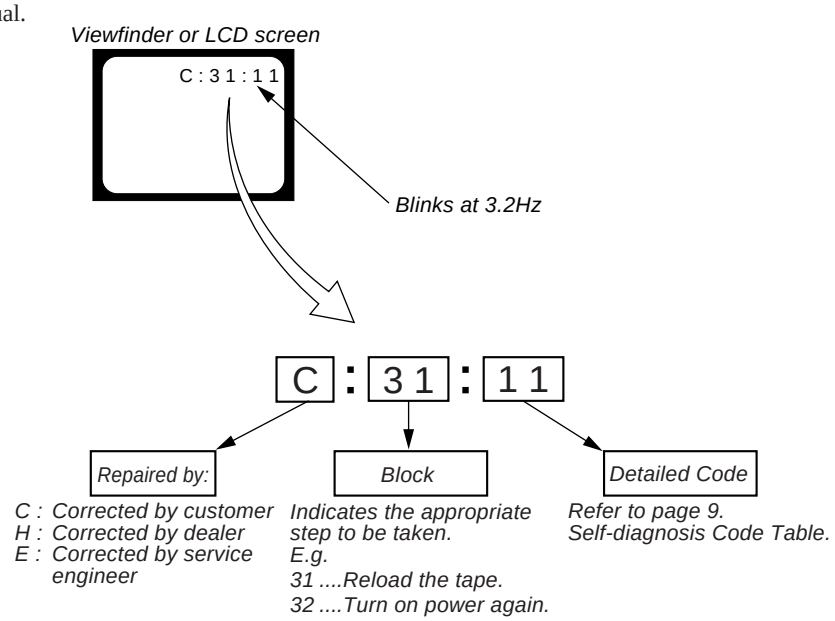

3. SERVICE MODE DISPLAY

The service mode display shows the last self-diagnosis codes shown in the past.

3-1. Display Method

While pressing the “BACK LIGHT” key, set the switch from OFF to “VCR or PLAYER”, and continue pressing the “BACK LIGHT” key for 5 seconds continuously. The service mode will be displayed, and the counter will show the backup No. and the 5-character self-diagnosis codes.

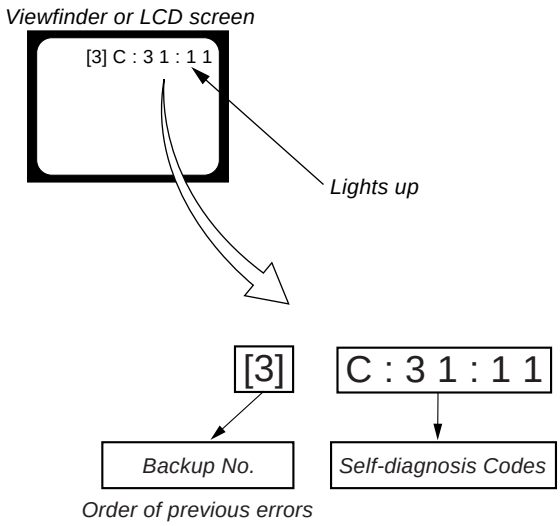

3-2. Backup No.

The backup No. in the [] indicates the order in which the problem occurred. (If the number of problems which occurred is less than 6, only the number of problems which occurred will be shown.)

[1] : Occurred first time [4] : Occurred fourth time
[2] : Occurred second time [5] : Occurred fifth time
[3] : Occurred third time [6] : Occurred the last time

Note: Switching of the backup No. can’t be done.

3-3. End of Display

Turning OFF the power supply will end the service mode display.

Note: The “self-diagnosis display” data will be backed up by the coin-type lithium battery of control switch block (FK-1770) BT601. When CN013 of VC-265 board is disconnected, the “self-diagnosis display” data will be lost by initialization.

4. SELF-DIAGNOSIS CODE TABLE

Self-diagnosis Code					Symptom/State	Correction
Repaired by:	Block Function		Detailed Code			
C	0	4	0	0	Non-standard battery is used.	Use the info LITHIUM battery.
C	2	1	0	0	Condensation.	Remove the cassette, and insert it again after one hour.
C	2	2	0	0	Video head is dirty.	Clean with the optional cleaning cassette.
C	3	1	1	0	LOAD direction. Loading does not complete within specified time	Load the tape again, and perform operations from the beginning.
C	3	1	1	1	UNLOAD direction. Loading does not complete within specified time	Load the tape again, and perform operations from the beginning.
C	3	1	2	0	T reel side tape slacking when unloading.	Load the tape again, and perform operations from the beginning.
C	3	1	2	1	Winding S reel fault when counting the rest of tape.	Load the tape again, and perform operations from the beginning.
C	3	1	2	2	T reel fault.	Load the tape again, and perform operations from the beginning.
C	3	1	2	3	S reel fault.	Load the tape again, and perform operations from the beginning.
C	3	1	2	4	T reel fault.	Load the tape again, and perform operations from the beginning.
C	3	1	3	0	FG fault when starting capstan.	Load the tape again, and perform operations from the beginning.
C	3	1	4	0	FG fault when starting drum.	Load the tape again, and perform operations from the beginning.
C	3	1	4	2	FG fault during normal drum operations.	Load the tape again, and perform operations from the beginning.
C	3	1	1	0	LOAD direction loading motor time-out.	Remove the battery or power cable, connect, and perform operations from the beginning.
C	3	1	1	1	UNLOAD direction loading motor time-out.	Remove the battery or power cable, connect, and perform operations from the beginning.
C	3	2	2	0	T reel side tape slacking when unloading.	Remove the battery or power cable, connect, and perform operations from the beginning.
C	3	2	2	1	Winding S reel fault when counting the rest of tape.	Remove the battery or power cable, connect, and perform operations from the beginning.
C	3	2	2	2	T reel fault.	Remove the battery or power cable, connect, and perform operations from the beginning.
C	3	2	2	3	S reel fault.	Remove the battery or power cable, connect, and perform operations from the beginning.
C	3	2	2	4	T reel fault.	Remove the battery or power cable, connect, and perform operations from the beginning.
C	3	2	3	0	FG fault when starting capstan.	Remove the battery or power cable, connect, and perform operations from the beginning.
C	3	2	4	0	FG fault when starting drum	Remove the battery or power cable, connect, and perform operations from the beginning.
C	3	2	4	2	FG fault during normal drum operations	Remove the battery or power cable, connect, and perform operations from the beginning.
E	6	1	0	0	Difficult to adjust focus (Cannot initialize focus.)	Inspect the lens block focus reset sensor (Pin ⑦ of CF-085 board CN3351) when focusing is performed when the focus ring is rotated in the focus manual mode, and the focus motor drive circuit (IC204 of VC-265 board) when the focusing is not performed.
E	6	1	1	0	Zoom operations fault (Cannot initialize zoom lens.)	Inspect the lens block zoom reset sensor (Pin ⑯ of CF-085 board CN3351) when zooming is performed when the zoom lens is operated and the zoom motor drive circuit (IC204 of VC-265 board) when zooming is not performed.
E	6	2	0	0	Steadyshot function does not work well. (With pitch angular velocity sensor output stopped.)	Inspect pitch angular velocity sensor (SE3450 of CF-085 board) peripheral circuits.
E	6	2	0	1	Steadyshot function does not work well. (With yaw angular velocity sensor output stopped.)	Inspect yaw angular velocity sensor (SE3451 of CF-085 board) peripheral circuits.

SECTION 3
BLOCK DIAGRAMS

3-1. OVERALL BLOCK DIAGRAM (1/3)(DCR-PC6E)

( ) : Page No. shown in ( ) indicates the page to refer on the schematic diagram.

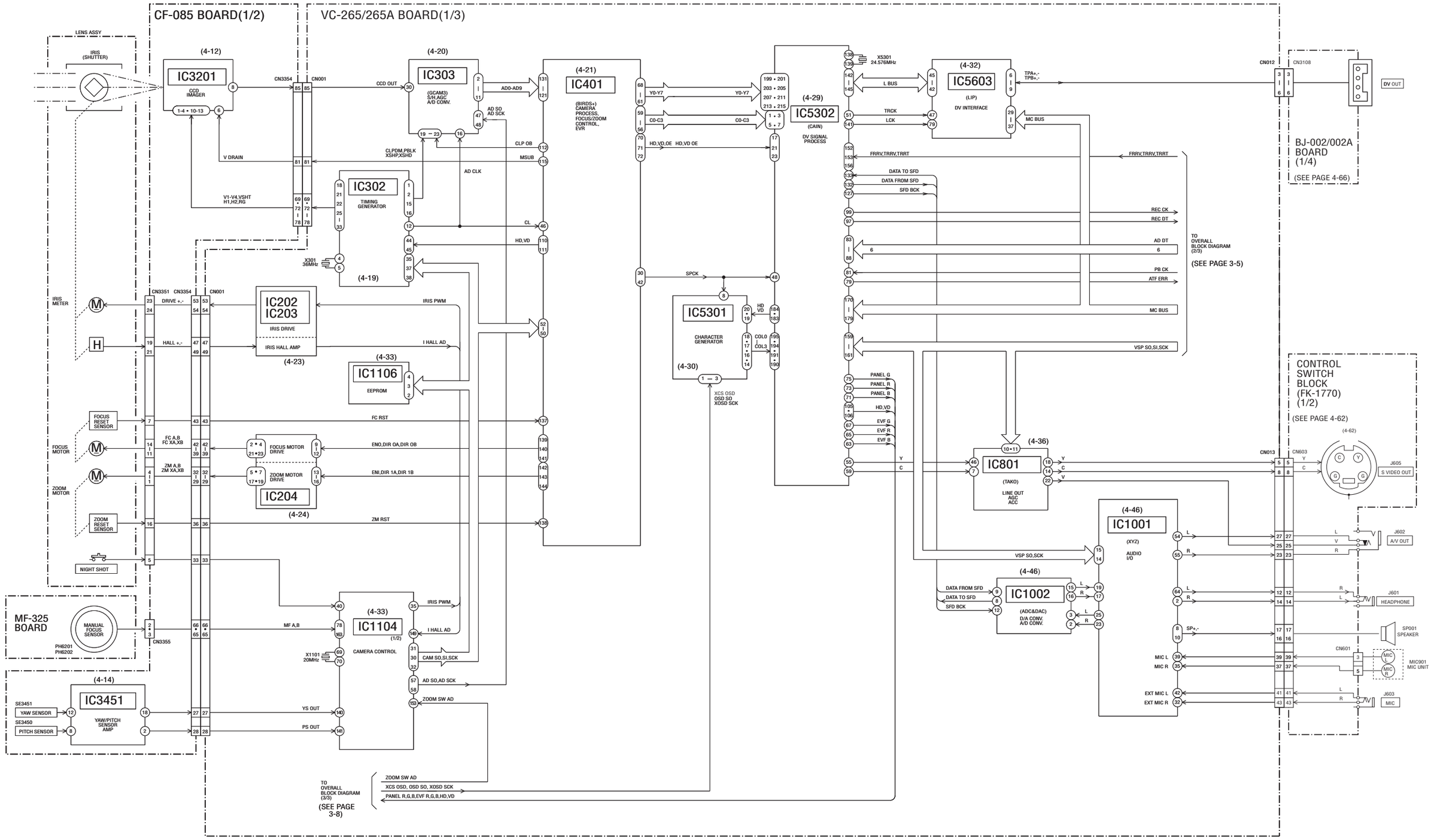

3-2. OVERALL BLOCK DIAGRAM (1/3)(DCR-PC9/PC9E)

( ) : Page No. shown in ( ) indicates the page to refer on the schematic diagram.

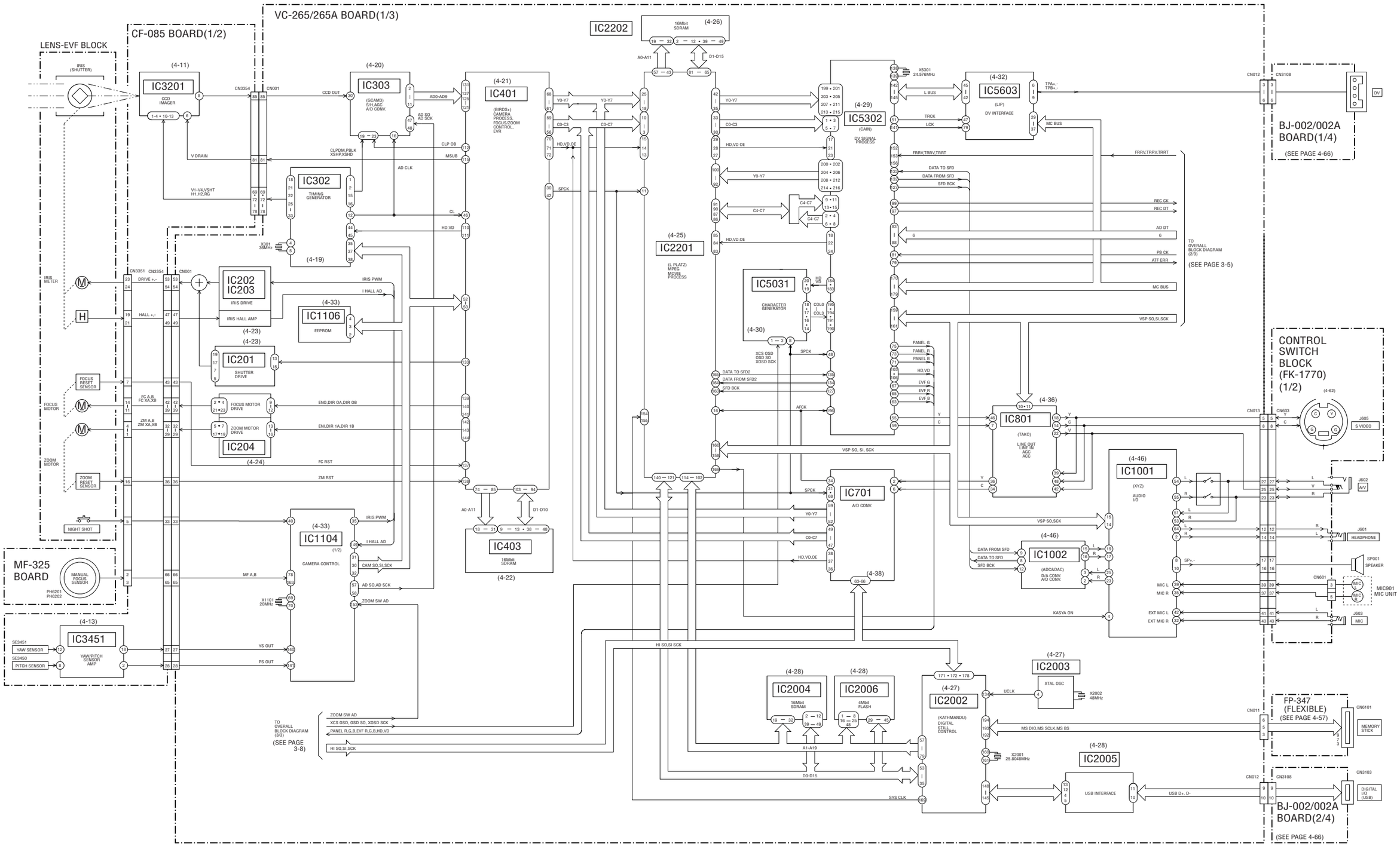

3-3. OVERALL BLOCK DIAGRAM (2/3)

( ) : Page No. shown in ( ) indicates the page to refer on the schematic diagram.

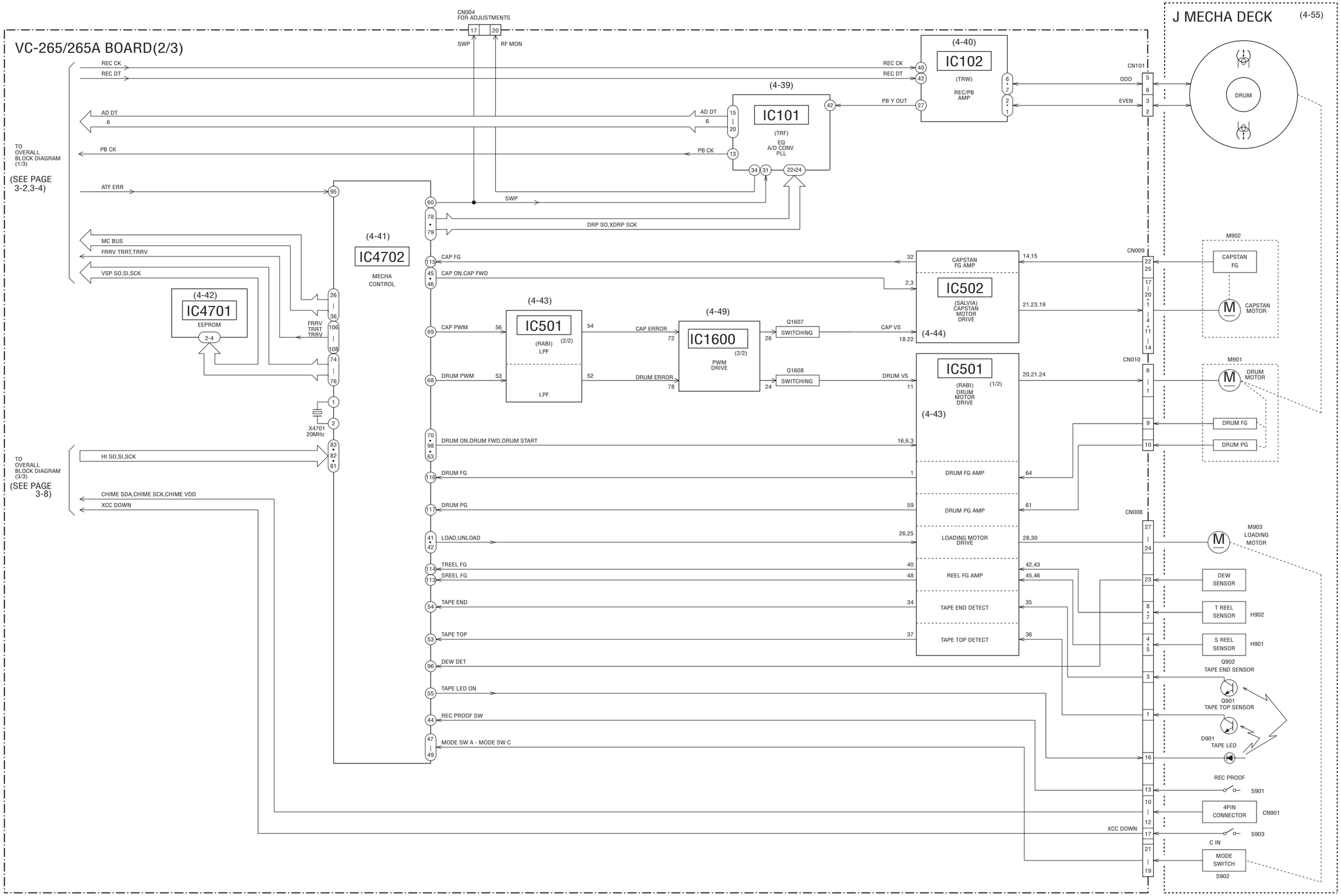

3-4. OVERALL BLOCK DIAGRAM (3/3)

( ) : Page No. shown in ( ) indicates the page to refer on the schematic diagram.

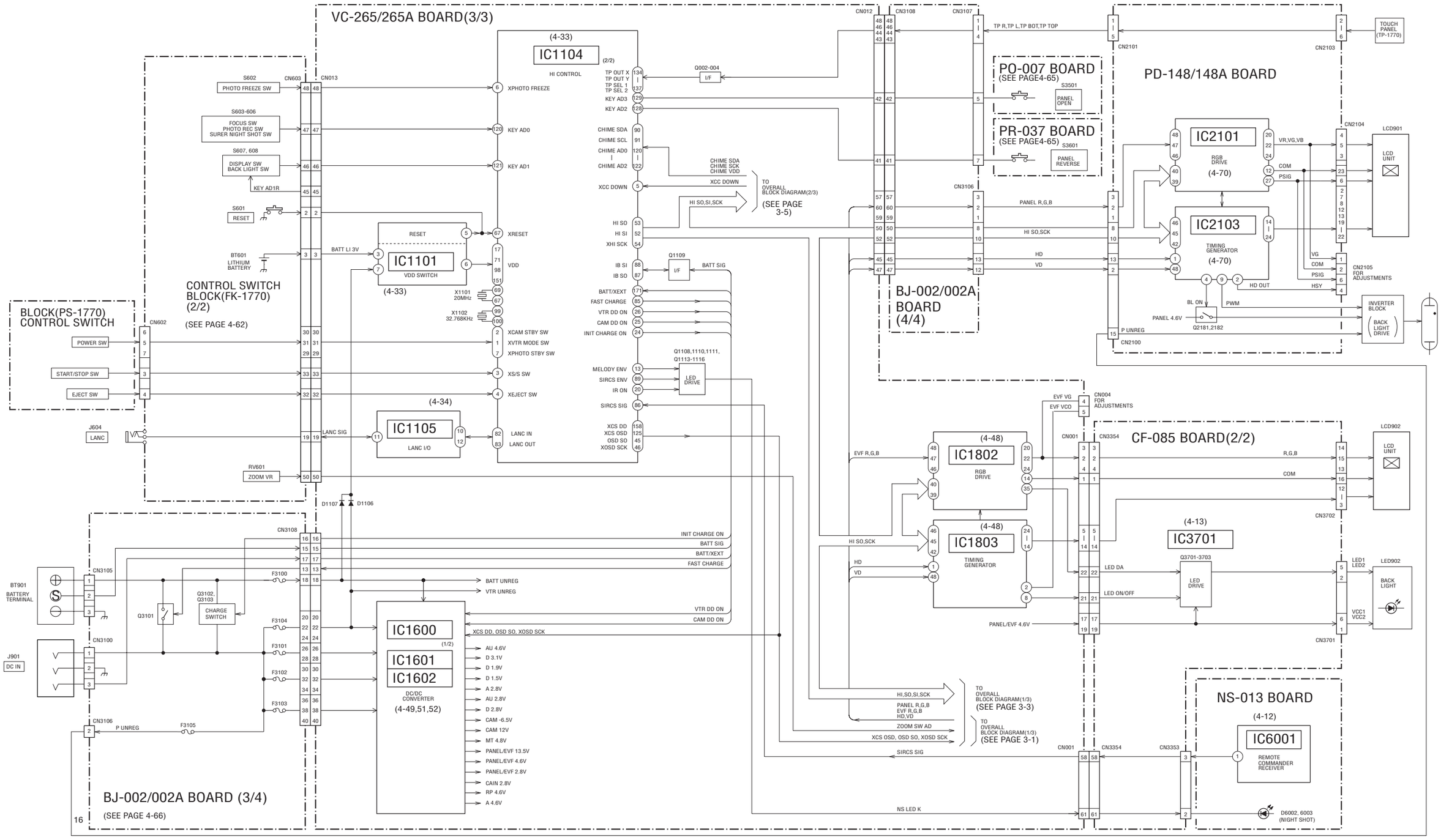

3-5. POWER BLOCK DIAGRAM (1/2)

( ) : Page No. shown in ( ) indicates the page to refer on the schematic diagram.

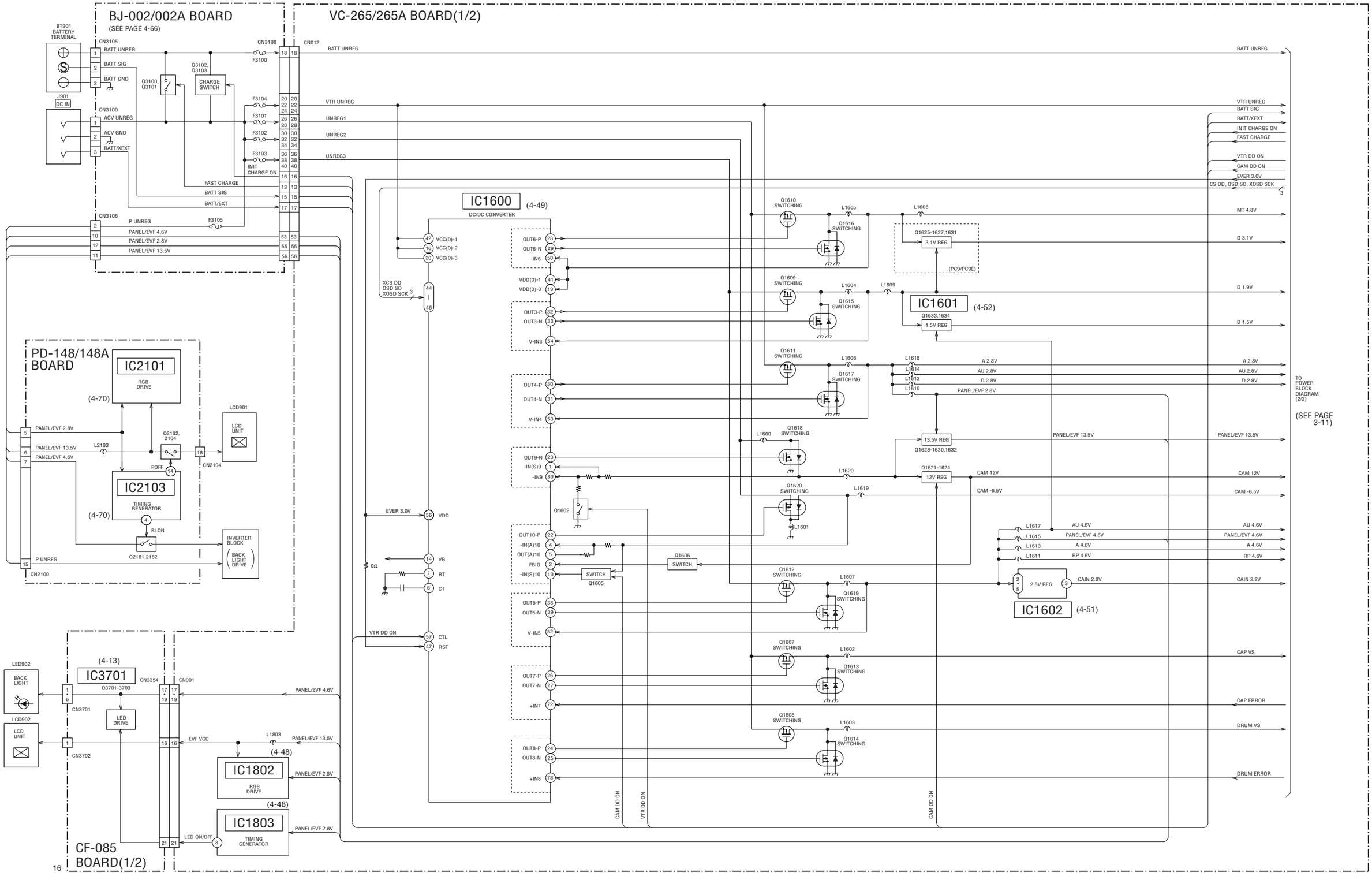

3-6. POWER BLOCK DIAGRAM (2/2)

( ) : Page No. shown in ( ) indicates the page to refer on the schematic diagram.

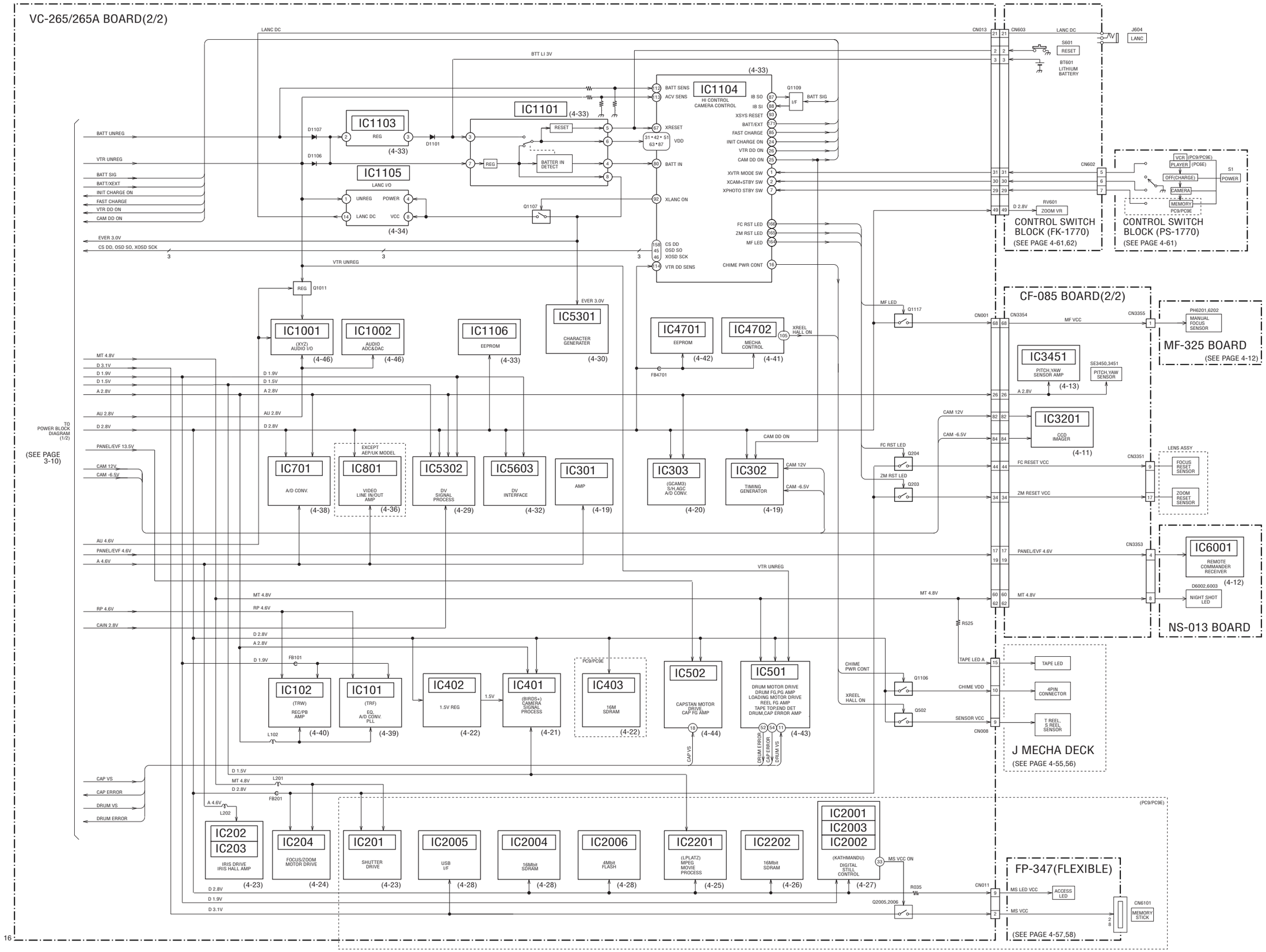

SECTION 4
PRINTED WIRING BOARDS AND SCHEMATIC DIAGRAMS

4-1. FRAME SCHEMATIC DIAGRAM (1/2)

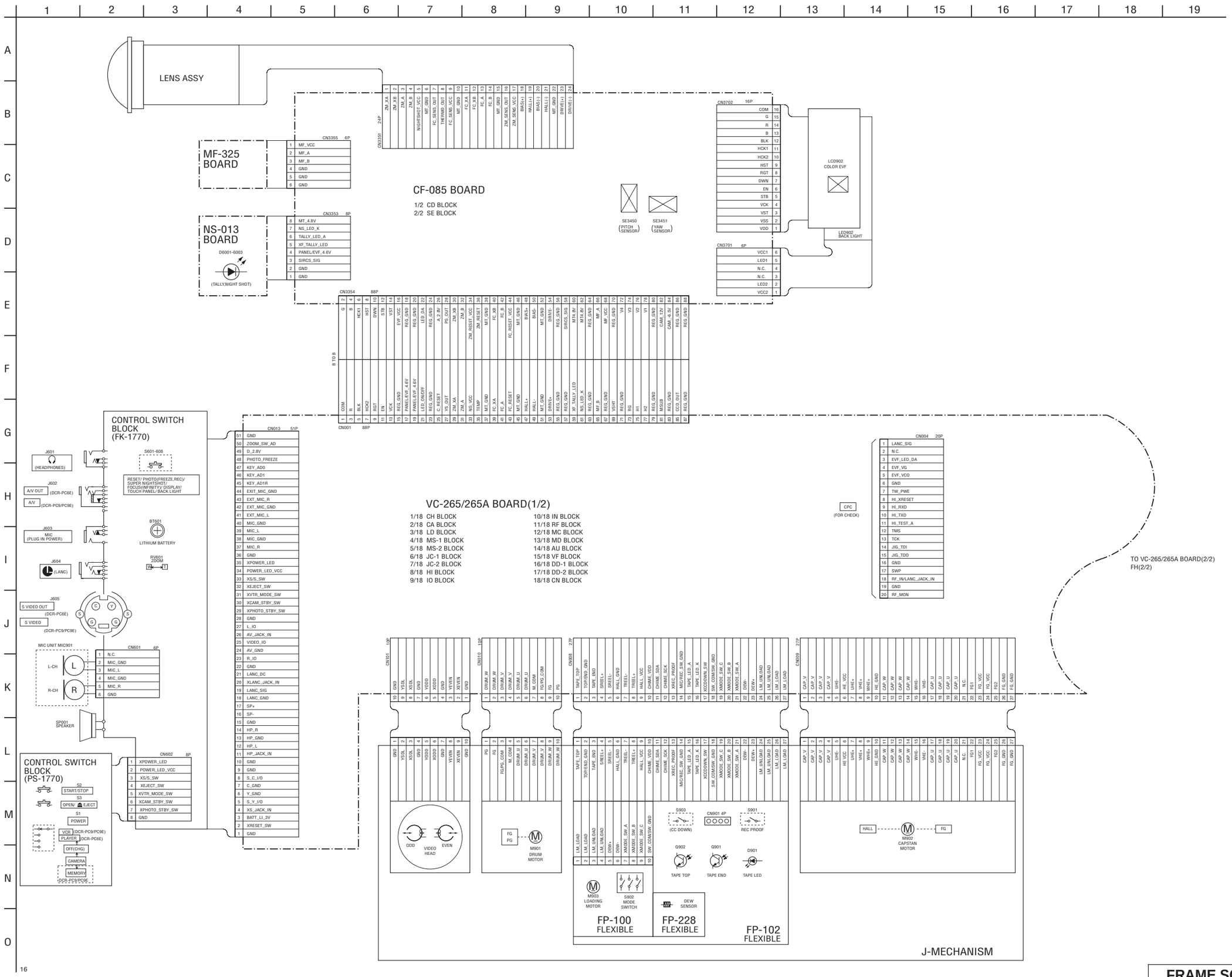

FRAME SCHEMATIC DIAGRAM (2/2)

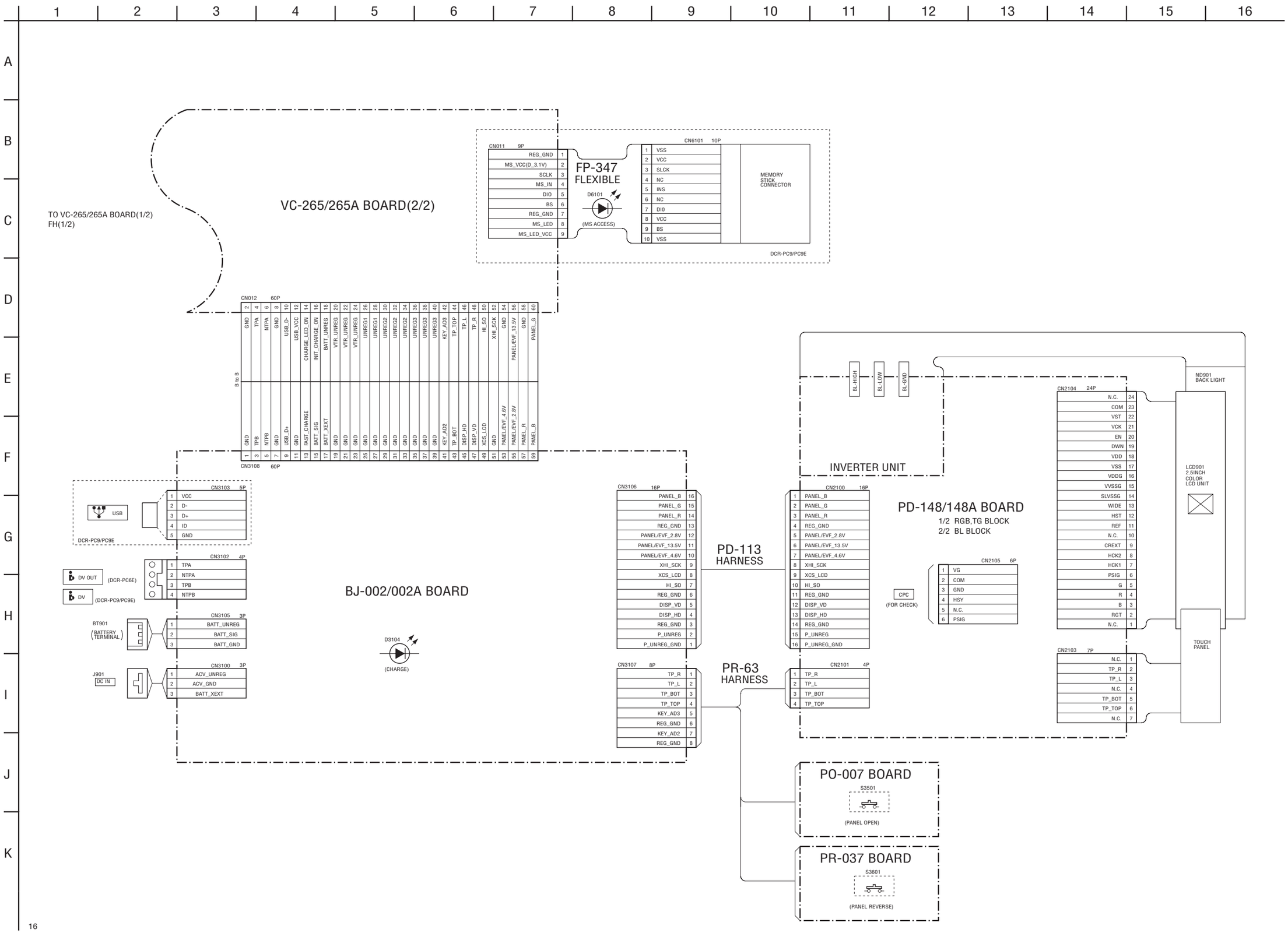

4-2. PRINTED WIRING BOARDS AND SCHEMATIC DIAGRAMS

THIS NOTE IS COMMON FOR WIRING BOARDS AND SCHEMATIC DIAGRAMS
(In addition to this, the necessary note is printed in each block)

(For printed wiring boards)
- ▒: Pattern from the side which enables seeing. (The other layers' patterns are not indicated.)
- Through hole is omitted.
- Circled numbers refer to waveforms.
- There are few cases that the part printed on diagram isn't mounted in this model.
- Chip parts.

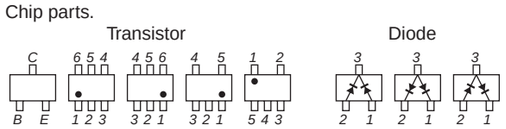

(For schematic diagrams)
- All capacitors are in µF unless otherwise noted. p: pF. 50V or less are not indicated except for electrolytics and tantalums.
- Chip resistors are 1/10W unless otherwise noted. kΩ=1000Ω, MΩ=1000kΩ.
- Caution when replacing chip parts. New parts must be attached after removal of chip. Be careful not to heat the minus side of tantalum capacitor, Because it is damaged by the heat.
- Some chip part will be indicated as follows.

Example	C541	L452
	22U	10UH
	TA A	2520

Kinds of capacitor
Temperature characteristics
External dimensions (mm)

- Constants of resistors, capacitors, ICs and etc with XX indicate that they are not used. In such cases, the unused circuits may be indicated.
- All variable and adjustable resistors have characteristic curve B, unless otherwise noted.
- Signal name
  XEDIT → $\overline{\text{EDIT}}$ PB/XREC → PB/$\overline{\text{REC}}$
- : non flammable resistor
- : fusible resistor
- : panel designation
- : B+ Line *
- : B– Line *
- : IN/OUT direction of (+,–) B LINE. *
- : adjustment for repair. *
- Circled numbers refer to waveforms. *

* Indicated by the color red.

Note :	Note :
The components identified by mark ⚠ or dotted line with mark ⚠ are critical for safety. Replace only with part number specified.	Les composants identifiés par une marque ⚠ sont critiques pour la sécurité. Ne les remplacer que par une pièce portant le numéro spécifié.

(Measuring conditions voltage and waveform)
- Voltages and waveforms are measured between the measurement points and ground when camera shoots color bar chart of pattern box. They are reference values and reference waveforms. * (VOM of DC 10 MΩ input impedance is used.).
- Voltage values change depending upon input impedance of VOM used.) *

1. Connection

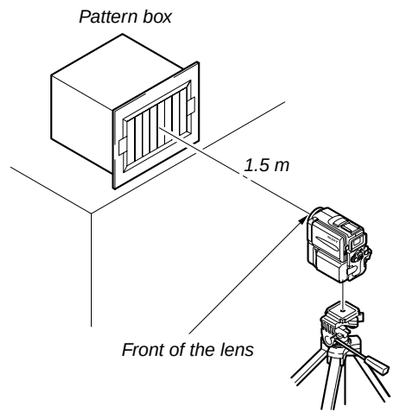

2. Adjust the distance so that the output waveform of Fig. a and the Fig. b can be obtain.

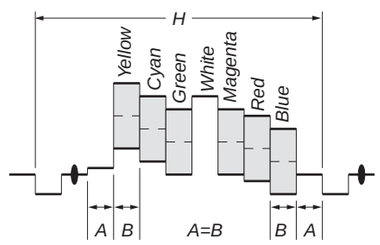

Fig. a (Video output terminal output waveform)

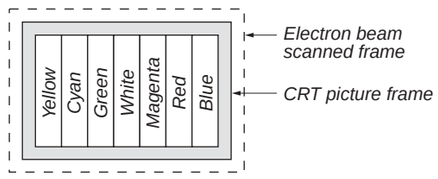

Fig.b (Picture on monitor TV)

When indicating parts by reference number, please include the board name.

MF-325 (MF SENSOR), NS-013 (REMOTE COMMANDER RECEIVER) PRINTED WIRING BOARDS

— Ref. No. MF-325, NS-013 Boards; 20,000 Series —

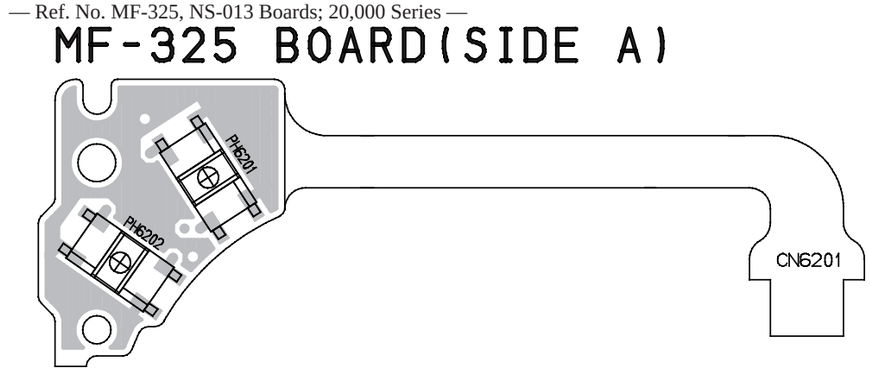

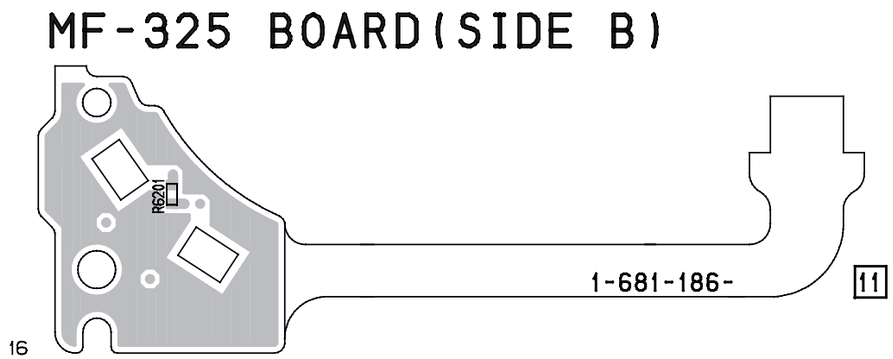

For printed wiring board

- Refer to page 4-78 for parts location. (NS-013 board)
- MF-325 board consists of multiple layers. However, only the sides (layers) A and B are shown.
- NS-013 board consists of multiple layers. However, only the side (layer) A is shown.

There are a few cases that the part printed on this diagram isn't mounted in this model.

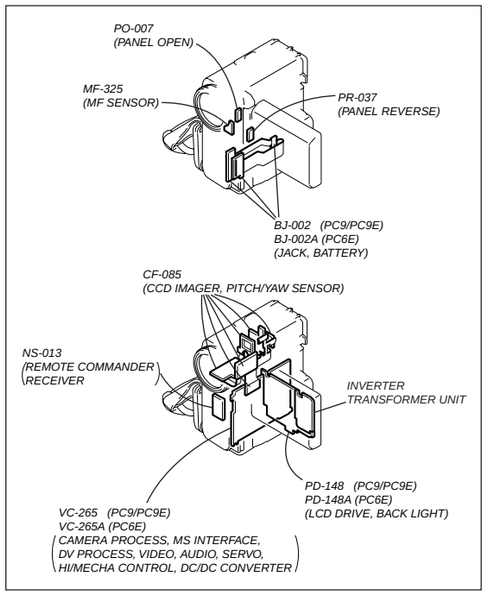

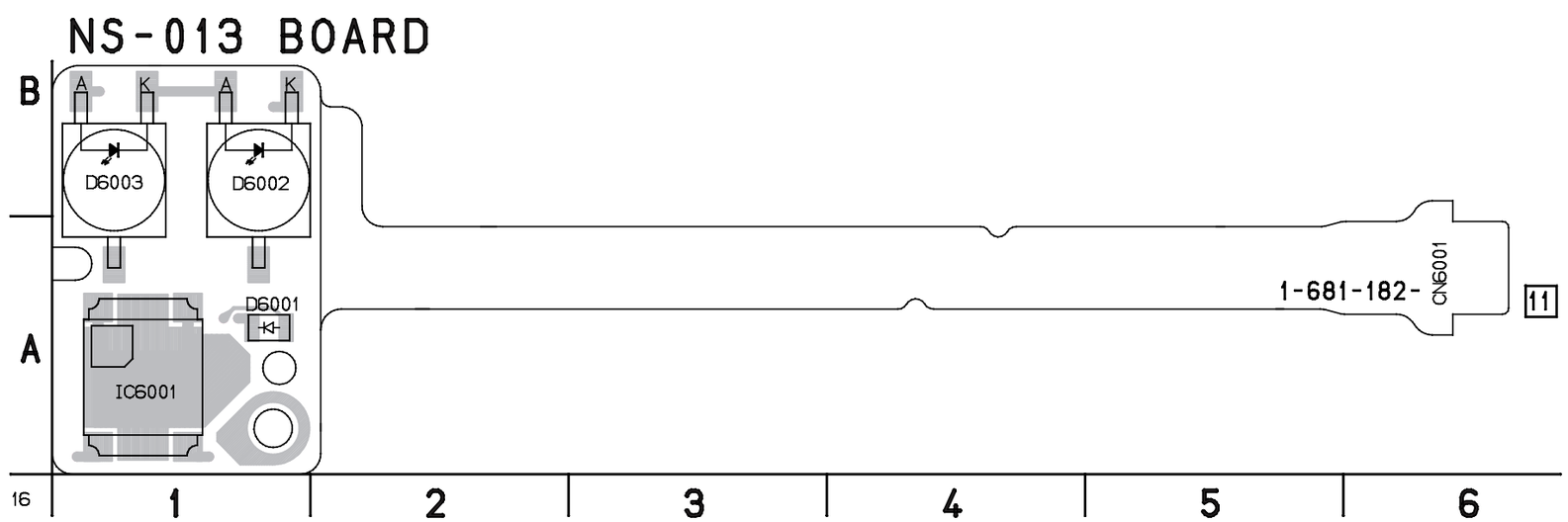

CF-085 (CCD IMAGER, PITCH/YAW SENSOR) PRINTED WIRING BOARD

— Ref. No. CF-085 Board; 20,000 Series —

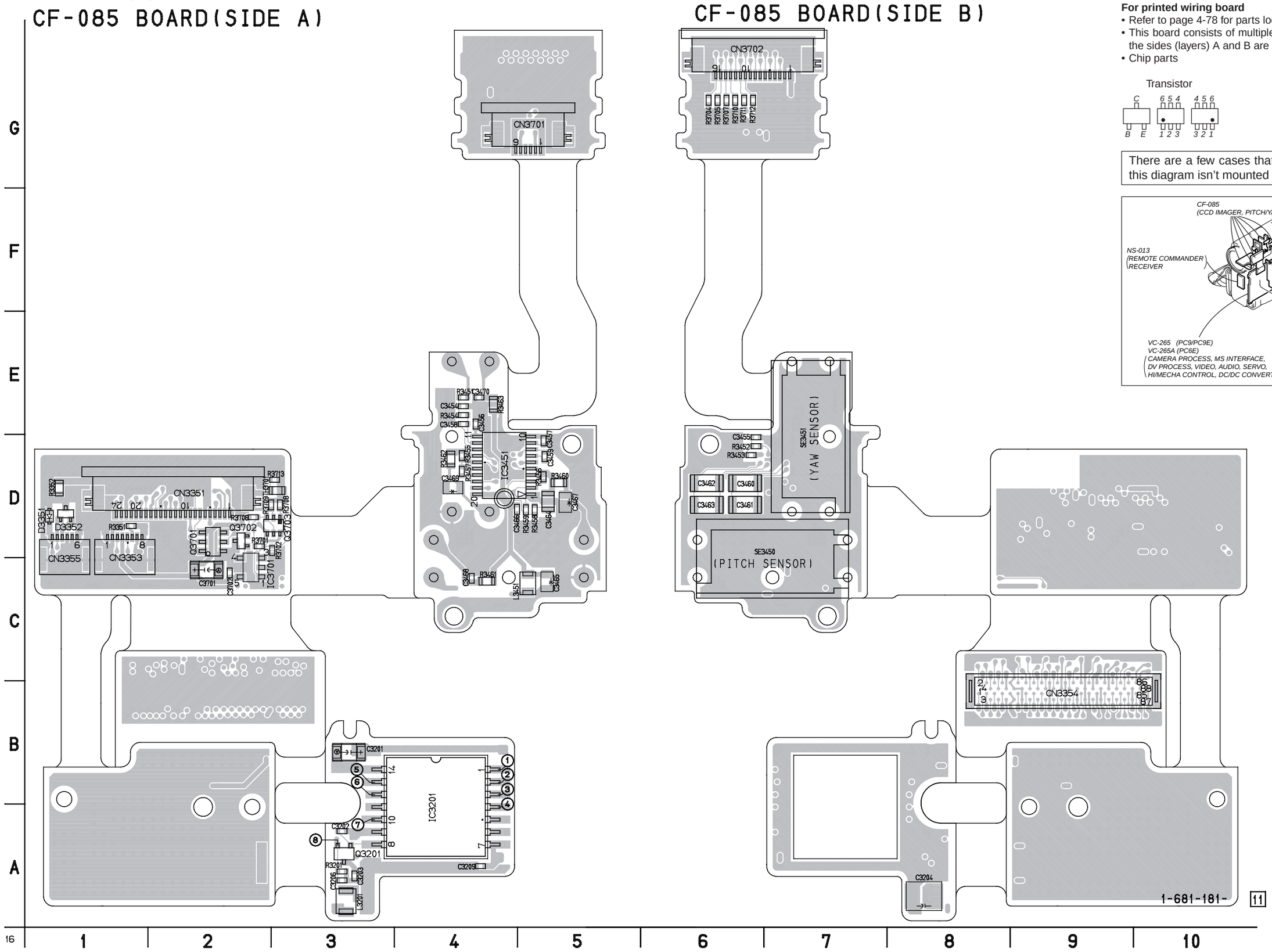

For printed wiring board

- Refer to page 4-78 for parts location.
- This board consists of multiple layers. However, only the sides (layers) A and B are shown.
- Chip parts

Transistor

Diode

There are a few cases that the part printed on this diagram isn't mounted in this model.

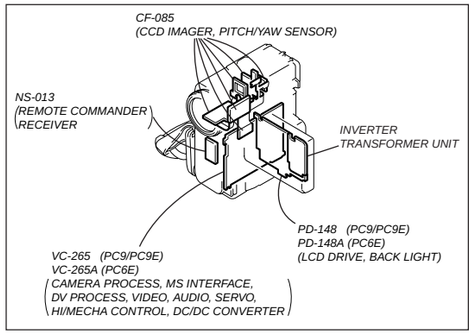

For Schematic Diagram
- Refer to page 4-9 for CF-085 printed wiring board.
- Refer to page 4-7 for MF-325, NS-013 printed wiring boards.
- Refer to page 4-73 for waveforms.

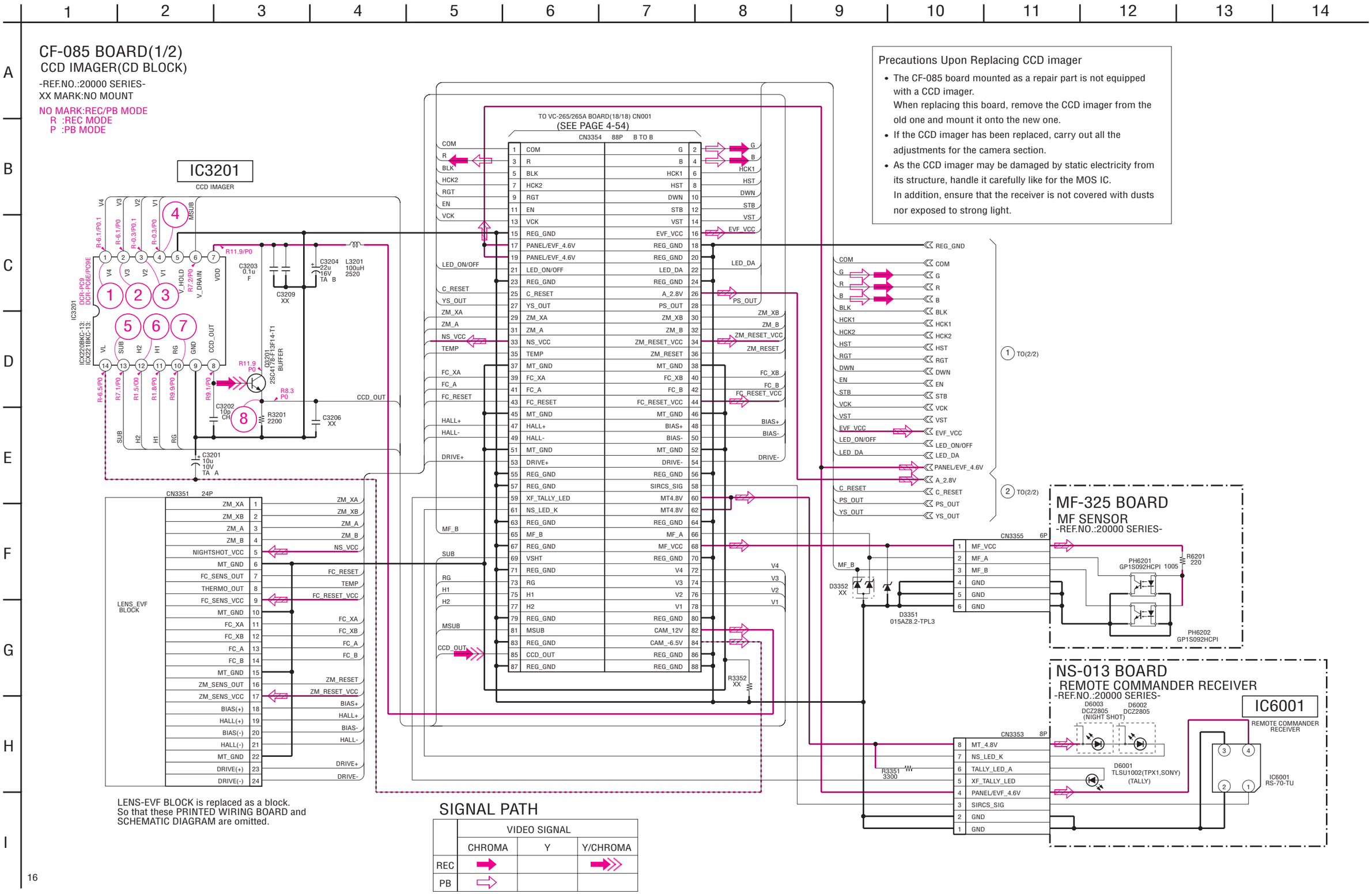

For Schematic Diagram
• Refer to page 4-9 for printed wiring board.

CF-085 BOARD(2/2)
PITCH,YAW SENSOR(SE BLOCK)

-REF.NO.:20000 SERIES-
XX MARK:NO MOUNT
NO MARK:REC/PB MODE

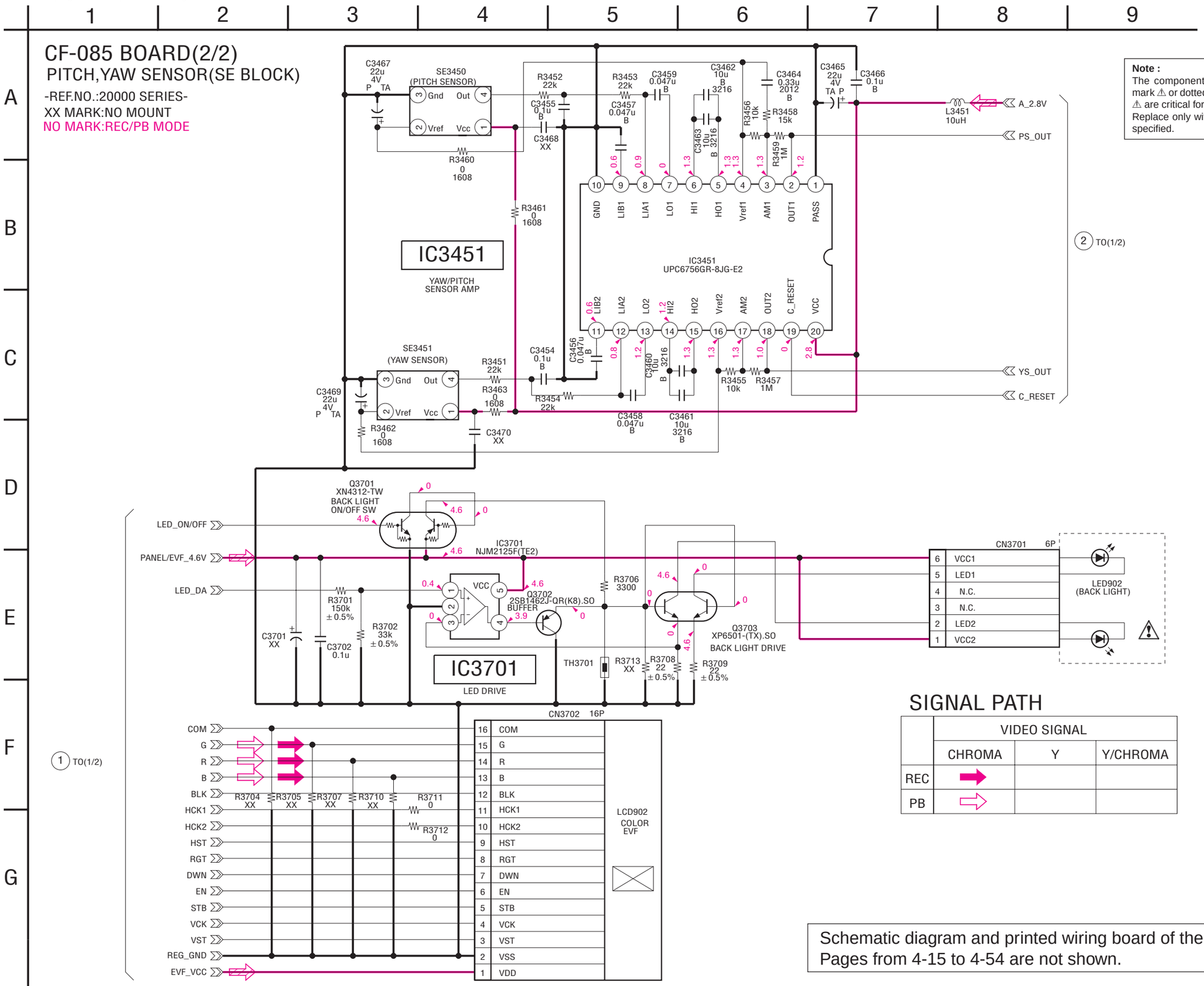

Note :
The components identified by mark ⚠ or dotted line with mark ⚠ are critical for safety.
Replace only with part number specified.

Note :
Les composants identifiés par une marque ⚠ sont critiques pour la sécurité.
Ne les remplacer que par une pièce portant le numéro spécifié.

SIGNAL PATH

	VIDEO SIGNAL		
	CHROMA	Y	Y/CHROMA
REC	➡		
PB	⇨		

Schematic diagram and printed wiring board of the VC-265/265A board are not shown.
Pages from 4-15 to 4-54 are not shown.

FP-100 (MODE SWITCH), FP-228 (DEW SENSOR), FP-102 (TAPE TOP/END SENSOR, S/T REEL) FLEXIBLE BOARDS

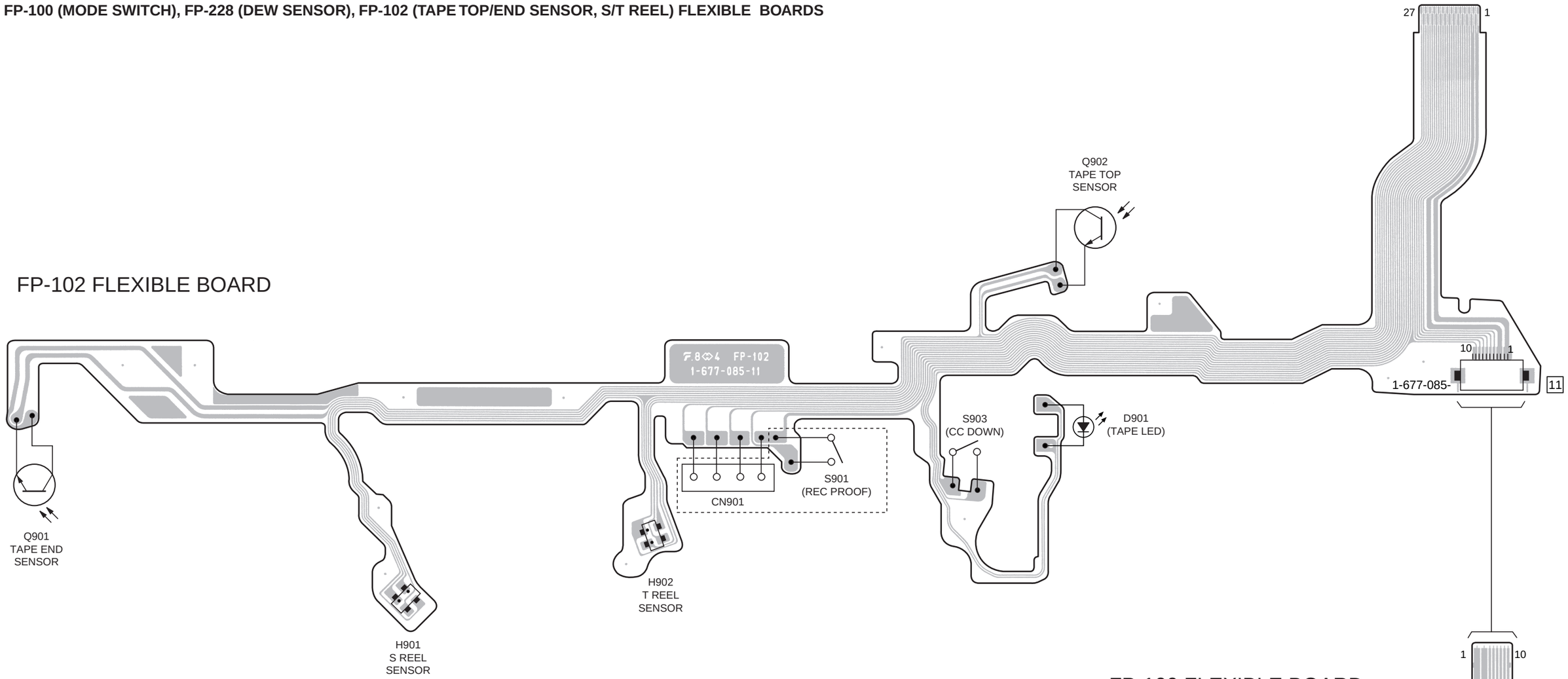

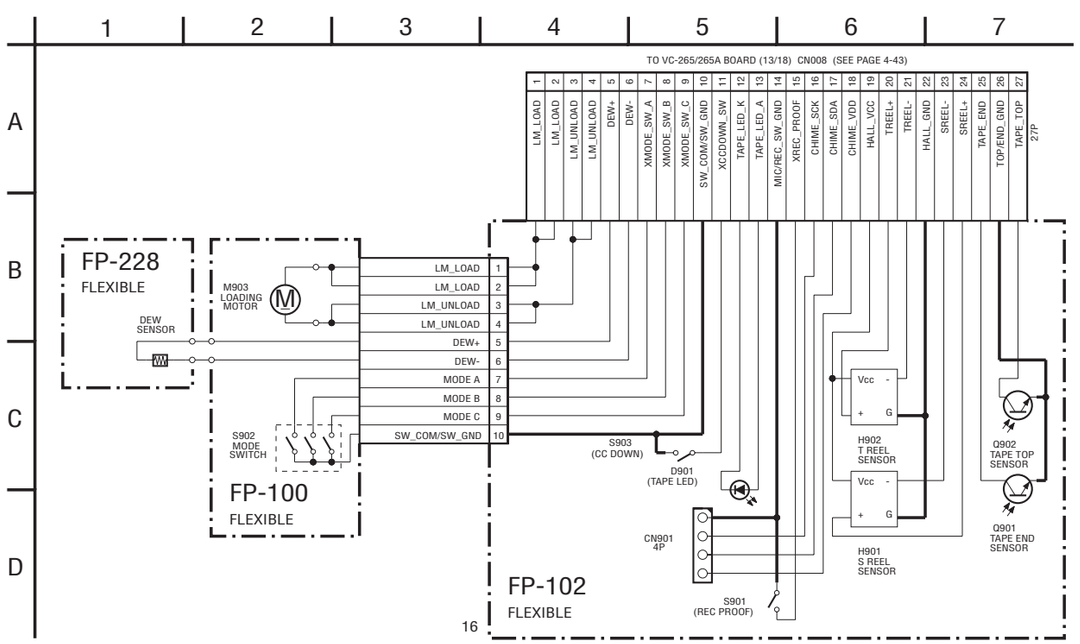

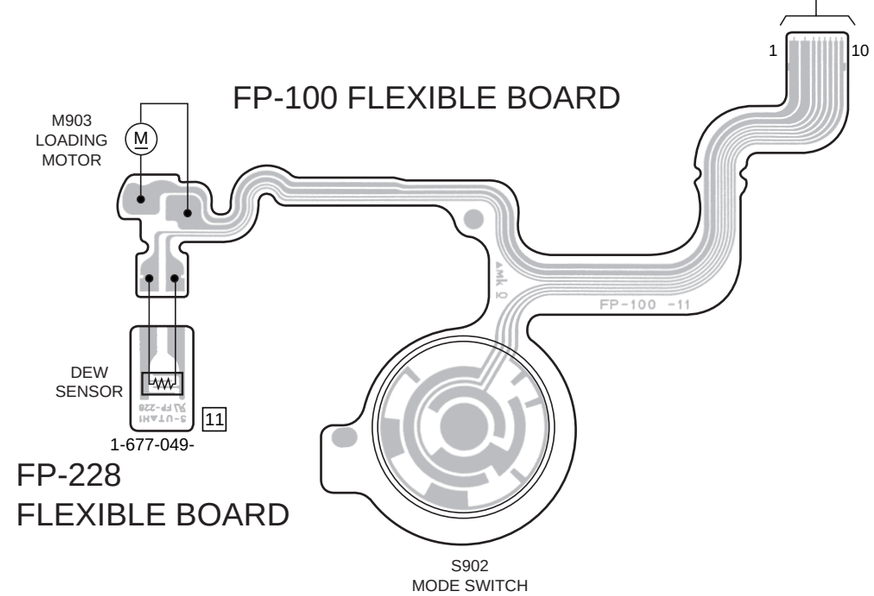

MODE SWITCH, DEW SENSOR / **TAPE TOP/END SENSOR, S/T REEL**

FP-100, FP-228 **FP-102**

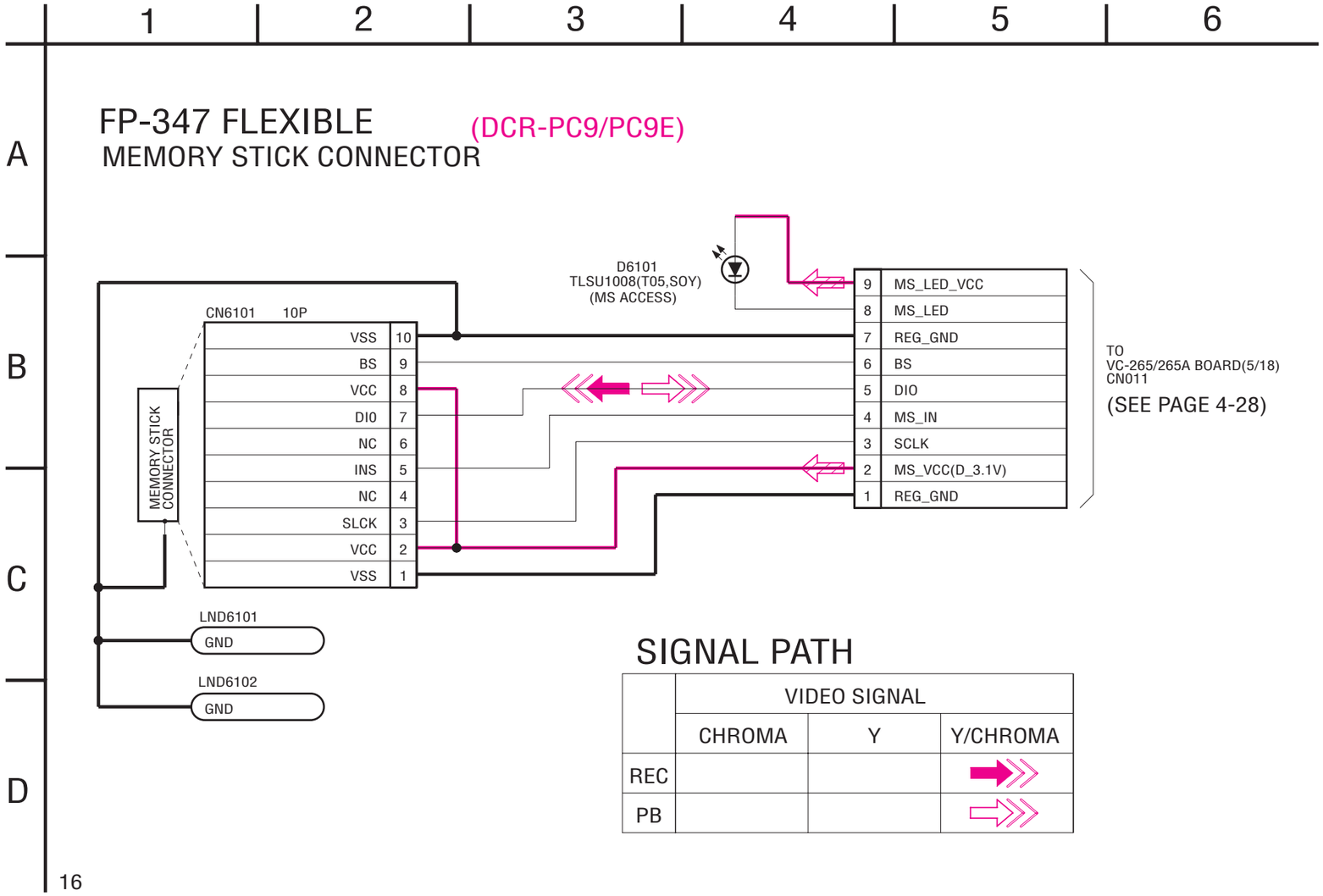

SIGNAL PATH

	VIDEO SIGNAL		
	CHROMA	Y	Y/CHROMA
REC			➡
PB			⇨

For Schematic Diagram

• Refer to page 4-59 for control switch block (FK-1770) printed wiring board.

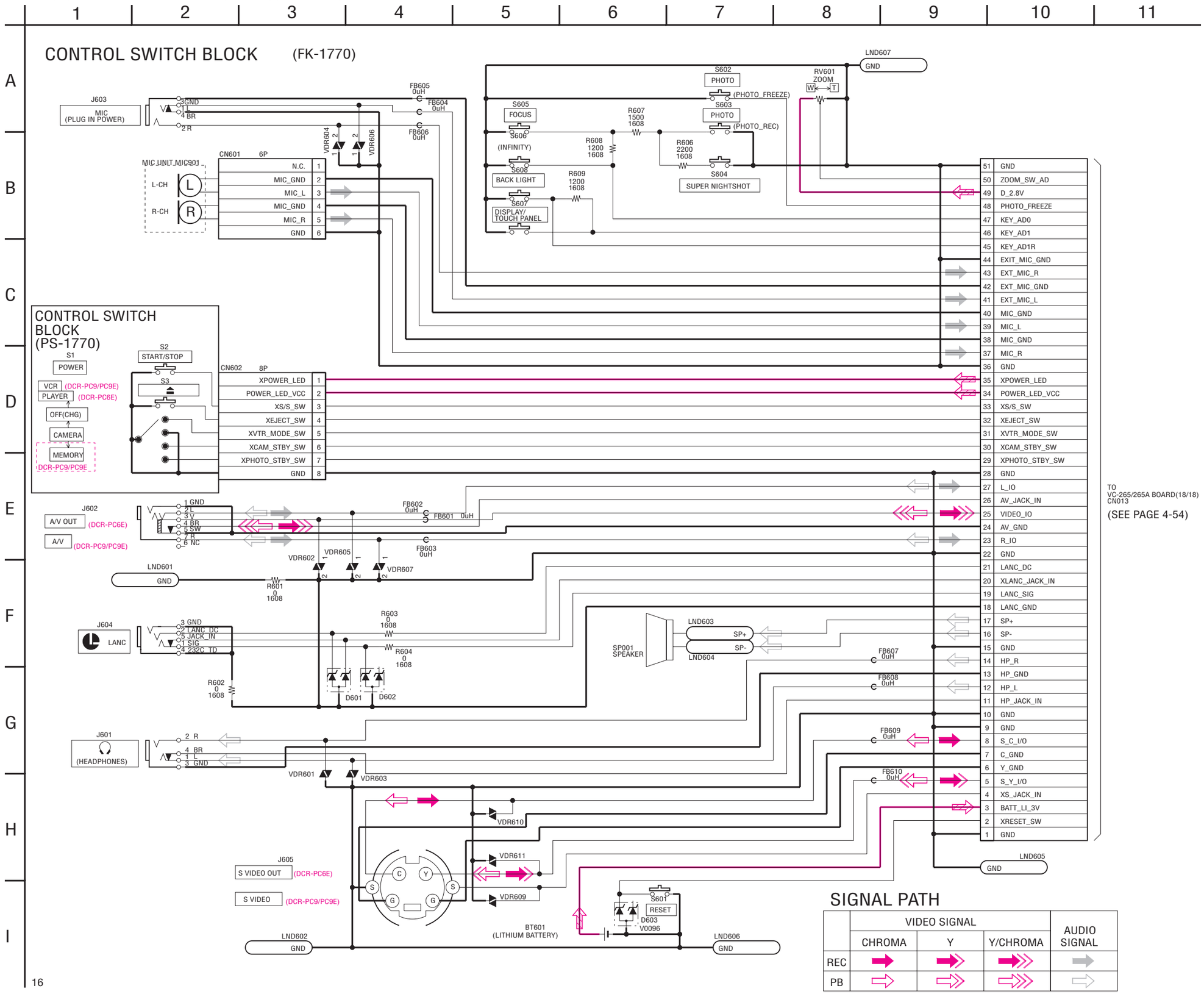

CONTROL SWITCH BLOCK
FK-1770, PS-1770

BJ-002/002A (JACK, BATTERY), PO-007 (PANEL OPEN), PR-037 (PANEL REVERSE) PRINTED WIRING BOARDS

— Ref. No. BJ-002/002A, PO-007, PR-037 Boards; 30,000 Series —

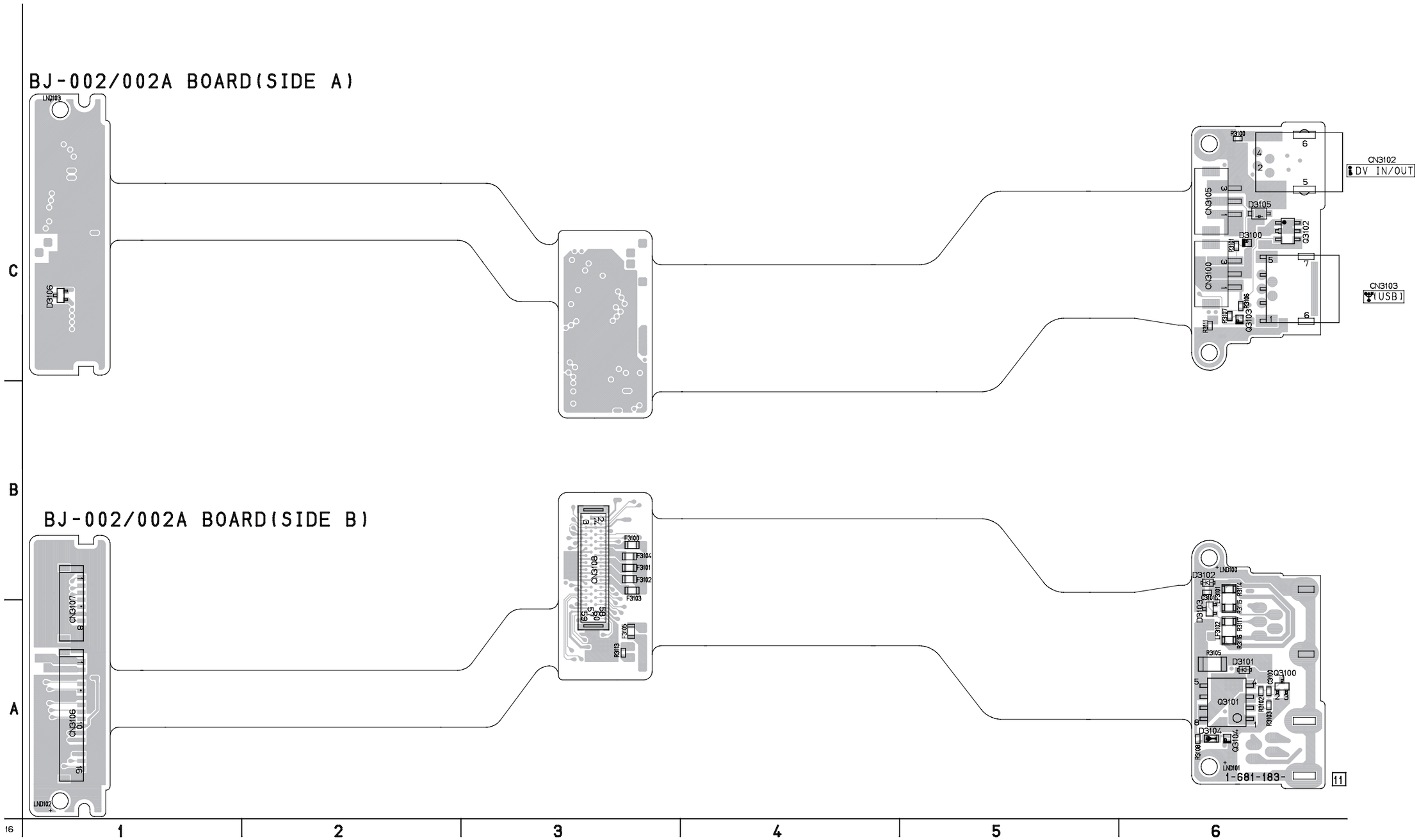

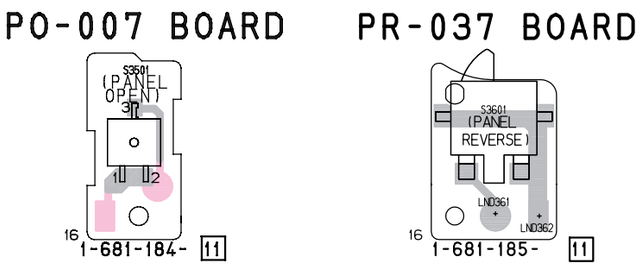

For printed wiring board

- Refer to page 4-78 for parts location (BJ-002/002A board).
- BJ-002/002A board consists of multiple layers. However, only the sides (layers) A and B are shown.
- PO-007, PR-037 boards consists of multiple layers. However, only the side (layer) A is shown.
- Chip parts (BJ-002/002A board only)

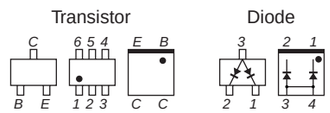

There are a few cases that the part printed on this diagram isn't mounted in this model.

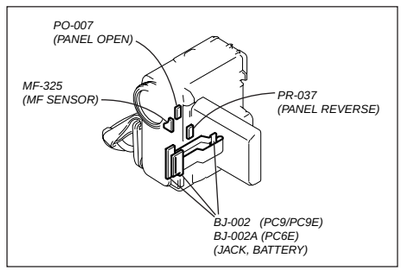

BJ-002 Board : DCR-PC9/PC9E
BJ-002A Board : DCR-PC6E

JACK, BATTERY / **PANEL OPEN** / **PANEL REVERSE**
BJ-002/002A / PO-007 / PR-037

For Schematic Diagram
- Refer to page 4-63 for BJ-002/002A printed wiring board.
- Refer to page 4-63 for PO-007 printed wiring board.
- Refer to page 4-63 for PR-037 printed wiring board.

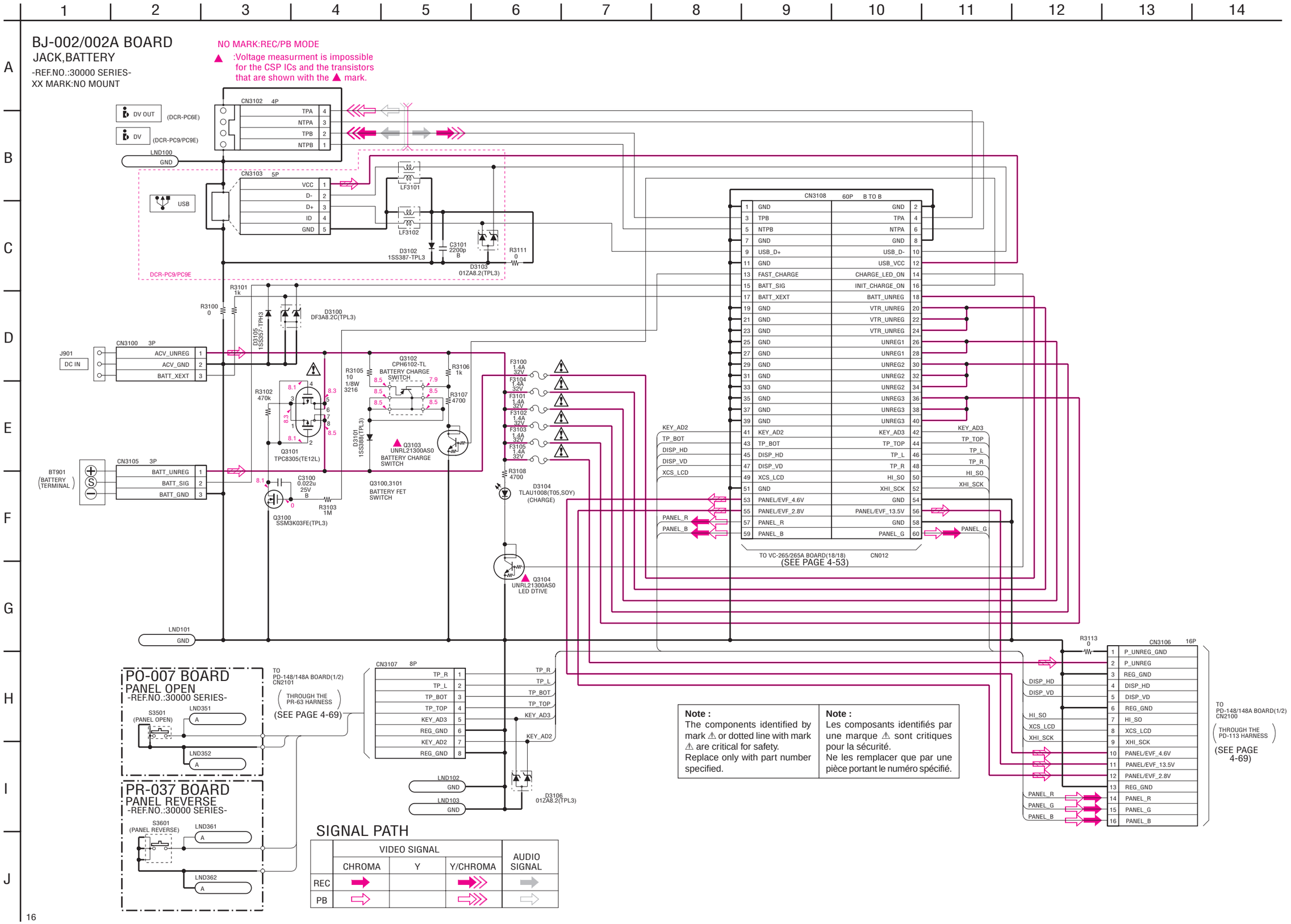

Note :
The components identified by mark ⚠ or dotted line with mark ⚠ are critical for safety.
Replace only with part number specified.

Note :
Les composants identifiés par une marque ⚠ sont critiques pour la sécurité.
Ne les remplacer que par une pièce portant le numéro spécifié.

For Schematic Diagram
- Refer to page 4-67 for printed wiring board.
- Refer to page 4-73 for waveforms.

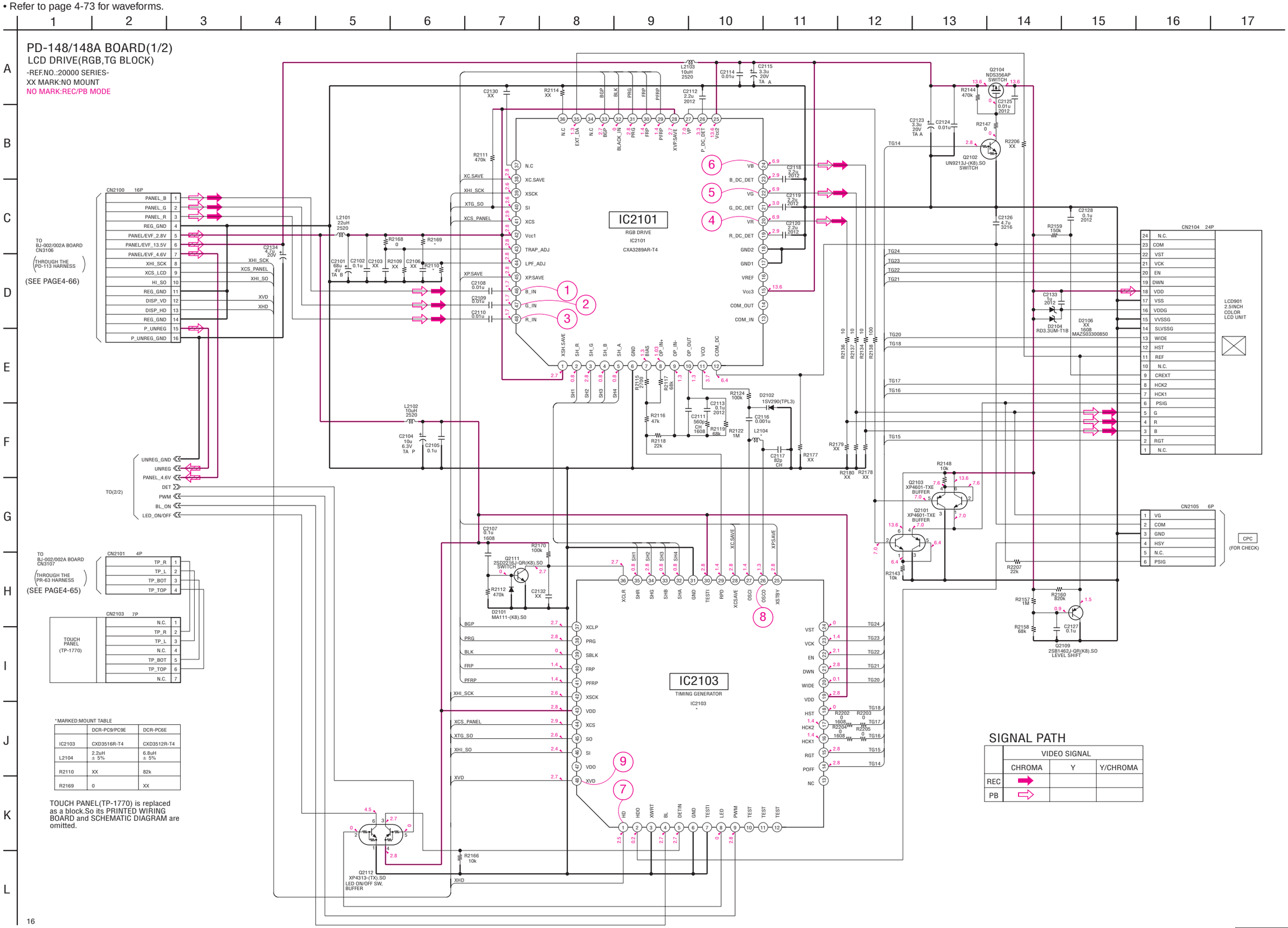

*MARKED:MOUNT TABLE

	DCR-PC9/PC9E	DCR-PC6E
IC2103	CXD3516R-T4	CXD3512R-T4
L2104	2.2uH ± 5%	6.8uH ± 5%
R2110	XX	82k
R2169	0	XX

TOUCH PANEL(TP-1770) is replaced as a block.So its PRINTED WIRING BOARD and SCHEMATIC DIAGRAM are omitted.

LCD DRIVE
PD-148/148A (1/2)

For Schematic Diagram

• Refer to page 4-67 for printed wiring board.

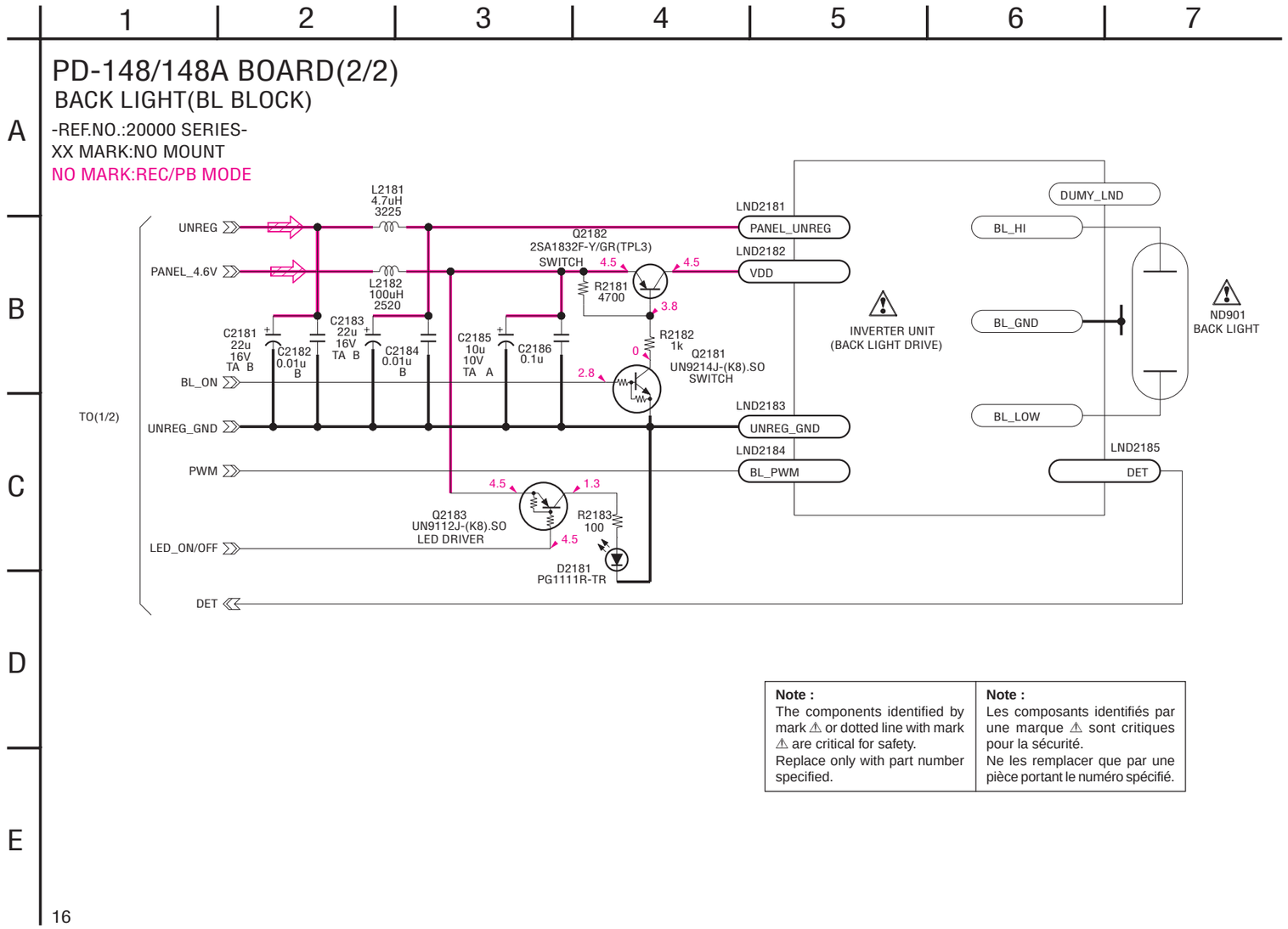

Note :	Note :
The components identified by mark ⚠ or dotted line with mark ⚠ are critical for safety. Replace only with part number specified.	Les composants identifiés par une marque ⚠ sont critiques pour la sécurité. Ne les remplacer que par une pièce portant le numéro spécifié.

4-3. WAVEFORMS

CF-085 BOARD
CAMERA REC

① IC3201 ①

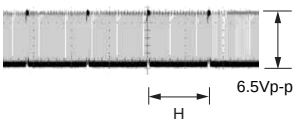

② IC3201 ②

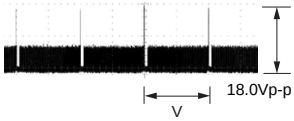

③ IC3201 ③

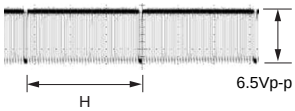

④ IC3201 ④

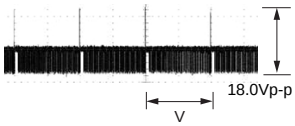

⑤ IC3201 ⑬

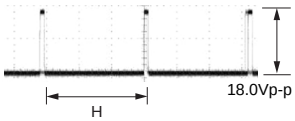

⑥ IC3201 ⑫

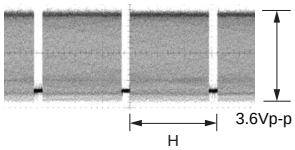

⑦ IC3201 ⑩

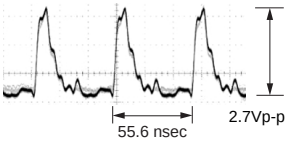

⑧ Q3201 Ⓔ

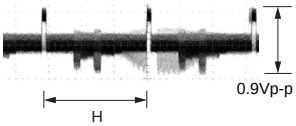

PD-148/148A BOARD
REC/PB

① IC2101 ㊻

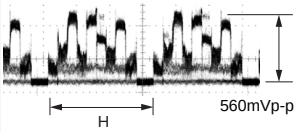

⑨ IC2103 ㊽

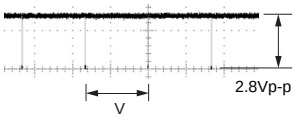

② IC2101 ㊼

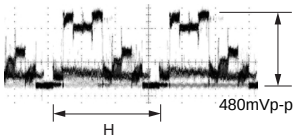

③ IC2101 ㊽

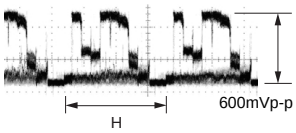

④ IC2101 ⑳

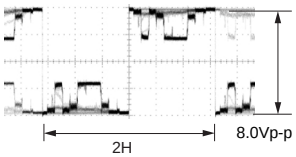

⑤ IC2101 ㉒

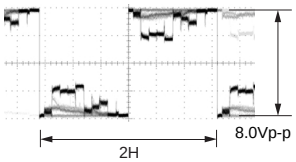

⑥ IC2101 ㉔

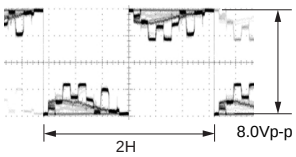

⑦ IC2103 ①

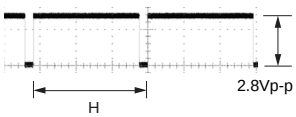

⑧ IC2103 ㉖

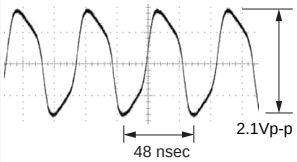

Waveforms and parts location of the VC-265/265A board are not shown. Pages from 4-74 to 4-77 are not shown.