Memory Guide

Contents

Page	
3	Memory Suppliers
4	The who does what guide
5-7	Memory Glossary
8-13	DRAM
14-19	DRAM modules
20-30	FLASH
31-59	SRAM
60-61	EPROM
62-68	E^2PROM
69-70	Serial FLASH
71-84	FIFO
85-95	Dual Port RAM
96-103	PSD
104-111	NVRAM

AMD

intel®

PHILIPS

CYPRESS

Micron™
The future of memory

ST®

HITACHI
Inspire the Next

intelligence everywhere™

TEXAS INSTRUMENTS

IDT™

OKI

XICOR

The who does what guide

Atmel						X	X	X	www.atmel.com
Alliance			X						www.alsc.com
Cypress			X	X			X		www.cypress.com
Elpida	X	X							www.elpida.com
Fujitsu	X					X			www.fujitsumicro.com
GSI Tech			X						www.gsitechnology.com
Hitachi			X			X			www.semiconductor.hitachi.com
Hynix	X		X			X			www.hea.com
IBM			X						www.chips.ibm.com
IDT			X	X					www.idt.com
Infineon	X	X							www.infineon.com
Intel						X			www.intel.com
ISSI			X						www.issi.com
Kingston		X							www.kingston.com
Micron	X	X	X			X			www.micron.com
Macronix						X	X		www.macronix.com
Mitsubishi	X		X						www.mitsubishichips.com
Mosel	X	X	X						www.moselvitelic.com
Motorola			X						www.motorola.com
NEC			X			X			www.necel.com
Philips								X	www.philips.com
Samsung	X	X	X			X			www.samsungsemi.com
Sandisk						X			www.sandisk.com
Sharp			X			X			www.sharpsma.com
SST						X			www.ssti.com
STMicro			X		X	X	X	X	www.st.com/flash
Sony			X						www.sony.com
Texas					X				www.texasinstruments.com
Toshiba			X			X			www.toshiba.com/taec
Winbond	X		X			X			www.winbond.com
Wintec		X							www.wintecind.com
Xicor					X			X	www.xicor.com

recommended source of supply **not recoomended**

Memory Glossary

- **Memory devices can be subdivided into two basic categories: volatile and non-volatile. Volatile memory is a semiconductor memory that requires a constant supply of power to hold its contents. Volatile devices lose their data, meaning all cells go to an indeterminate state when the power is turned off, and nonvolatile devices do not. The DRAM and SRAM families feature volatile products, whereas EEPROM, EPROM, Masked ROM and Flash product families feature nonvolatile devices.**

- **PROM - Electrically Programmable Read Only Memory. The memory cells utilize proven EPROM floating gate technology and byte-wide intelligent programming algorithms.**

- **DRAM - Dynamic Random Access Memory. Single-transistor memory cells that requires regular refreshes.**

- **DRAM Modules - A collection of DRAM components assembled on a circuit card.**

- **EEPROM - The EEPROM product family is separated into serial and parallel devices. These distinctions refer to the way data is transferred to and from the device, as a serial or parallel string. Serial EEPROMs are usually limited in density (64Kbits and lower) and are utilized in applications where reprogramming is limited. Parallel EEPROMs are found in applications that require higher densities and where reprogramming is also limited.**

- **EPROM - Electrically Erasable & Programmable Read Only Memory. The EPROM is the least complex in design and, generally, the least expensive in terms of purchase price for a given density. The OTP (One Time Programmable) EPROM can be programmed once and is less expensive than EPROM since it does not have a window to allow UV light in for erasure. EPROM is also less flexible/complex when compared to FLASH, EEPROM, and NVRAM devices. The EPROM can be programmed electrically but requires an ultra-violet light for erasure.**

Memory Glossary

- **FIFO - First In, First Out. Memory devices that are used in buffering applications between processors that operate at different speeds or in applications where data must be temporarily stored for further processing.**

- **Flash - Flash is electrically erasable and programmable in its application, but can only be erased/programmed by sectors (group of bytes) or the entire chip.**

- **Multiport & Dual Port - Multi-port RAMs are SRAMs that are functionally designed so that they can allow two or more independent devices to have access to the same memory array. Dual or multi-products were designed to solve complex bus bandwidth and processor connectivity problems in shared memory designs.**

- **PC Cards - Also known as (PCMCIA) Personal Computer Memory Card International Association. Used in notebook or laptop computers, PDAs, Cell Phones, Digital Cameras and many other products.**

- **SRAM - Static Random Access Memory. SRAMs are volatile memory devices that do not require updates or periodic refresh cycles to keep the memory contents intact. There are two main families of SRAMs: Asynchronous, referred to as standard SRAMs, and Synchronous. The Synchronous family allows the static RAM to trigger all of its signals on one clock cycle.**

- **NVRAM - Nonvolatile RAM. Devices are either SRAM die mounted in a package with a small battery, or a combination of EEPROM cells along with SRAM cells on the same chip or with other emerging technologies. NVRAM can be designed to have both RAM and ROM functions in one device, which can be reconfigured at the users discretion. A major NVRAM (battery-backed SRAM) application has real time clocks used to maintain time and date information, even when the system is powered down.**

- **ROM - Mask Read Only Memory (also referred to as MROM). Mask ROM is the least complex and least expensive device in the nonvolatile memory market. MROM is further differentiated from the other product families by its inability to be reprogrammed. The MROM is also the only nonvolatile memory product family that is not user-programmable.**

Memory Glossary

ACCESS TIME - Period of time (in Nanoseconds) it takes memory to complete one access and begin another.

ASYNCRONOUS - Memory Timing controlled by the CPU.

BANDWIDTH – A measure of the amount of data that can be transferred through a device.

BACKSIDE BUS - The bus that runs from the memory controller to the main memory. (Depending on Design)

BIT - Smallest unit of information a computer processes. A bit value is a “0” or a “1”

BUFFER - A holding area of memory used to hold data while it is being processed.

BUS - A bus enables devices to communicate to each other. (Data is transmitted)

BUS CYCLE - A single transaction between main memory and the CPU.

BUS CONTENTION – occurs when 2 or more devices attempt to drive a common bus with opposite values.

BYTE - A unit of information made up of 8 Bits.

FRONT SIDE BUS - The bus that runs from the CPU to the memory controller. (Depending on Design)

LATENCY – is access time measured in clock cycles.

MEMORY - is Volatile, does not maintain data or Non-Volatile, which does retain data in power-down mode.

MEMORY BANK - 32 BIT CPU requires memory banks that provide 32 bits of data at a time.(Determined CPU)

MEMORY BUS - The bus that runs from the CPU to the memory expansion slots.

“MHz” - is a unit of frequency “number of cycles per second” 100 MHz means 100M clock cycles per second.

NANOSECOND – One billionth of a second. (Memory Data Access Time)

NON-VOLATILE - No loss of data even when power is removed. (Flash & EPROM are Non-Volatile Memory)

REFRESH – An electrical process used to maintain data stored in DRAM. (Self–refresh 2K, 4K, and 8K)

SYNCHRONOUS - Clock control Memory timing, rather than CPU.

VOLATILE - Power Off: Contents lost. (DRAM & SRAM are Volatile Memory)

WAIT STATE - Result from different clock speeds of the processor & memory. (Inactive period for the CPU)

DRAM Glossary

BANK SCHEMA - A method of diagramming memory configurations. (Rows/Sockets/Columns/Banks)
BUFFERED MEMORY - EDO & Fast Page Mode Modules. (Registered is used on SDRAM Modules)
CAS LATENCY - The ratio between column access time and clock cycle time. (CL2, or CL3)
CL2 - Wait 2 clock cycles instead of 3 for (CL3). A little faster. Some systems only support 1 type.
CLOCK CYCLE - CPU "MHz" Divided by System Clock (400MHz CPU divided by 100MHz = 4 clocks)
DDR - (Double Data Rate) Allows data to be read on both the rising & falling edge of the clock.
DRAM - (Dynamic Random Access Memory) Retains data that must be refreshed often or data is lost.
ECC - (Error Correction Code) Can detect and correct single bit memory errors. (Like Parity)
EDO - (Extended Data Out) DRAM technology that shortens the read cycle between memory & CPU.
FAST-PAGE MODE - (FP) enables the CPU to access new data in ½ the normal access time.
GRANULARITY - Minimum system density in MB's, given DRAM configuration & and Bus Width.
PARITY - A method of data integrity checking that adds a single bit to each byte. (To detect errors)
PC 100 - Intel defined memory standard - 125 "MHz".
PC 133 - Memory Manufacturers defined memory standard - 133 "MHz"
RAMBUS - Develops and licenses high performance memory technology.
RDRAM – Rambus DRAM technology design that allows data to pass through a simplified bus (X16)
REFRESH - An electrical process used to maintain data stored in DRAM. (2K,4K, 8K Refresh Rates)
REFRESH RATE – A spec. determined by the number of rows on a DRAM that must be refreshed.
REGISTERED MEMORY - A term used to describe SDRAM that contains registers on the module.
SDRAM - (Synchronous DRAM) uses a clock to synchronize signal input & output on a memory chip.
SELF-REFRESH - A memory technology that enables DRAM to refresh on its own.
SINGLE BANKED - An electrical term used to describe a module that has only one "bank" or "row".
UN-BUFFERED MEMORY – Used by Desktop & Laptops, limits use to four slots on system.

DRAM Part numbering guide - Micron

MT48LC16M8A2TG-75 L ES

Micron Technology

Product Family
4 = DRAM
46 = DDR SDRAM
48 = SDRAM
6 = Rambus® Memory

Process Technology
C = 5V V_{CC} CMOS
LC = 3.3V V_{DD} CMOS
V = 2.5V V_{DD} CMOS

Device Number
Depth, Width
No Letter = Bits
K = Kilobits
M = Megabits
G = Gigabits

Device Versions
Alphanumeric character(s) specified by individual data sheet.

Package Codes
DJ = SOJ
DW = SOJ (Wide)
F = FBGA* (54-ball, 4 row depop)
FB = FBGA (60-ball, 8 x 16)
FC = FBGA (60-ball, 90-ball, and 144-ball; 11 x 13)
FD = FBGA (80-ball, 9 x 16)
FF = FBGA (54-ball, 8 x 9)
FG = FBGA (54-ball, 8 x 14)
FH = FBGA (84-ball, 11 x 16)
FJ = FBGA (60-ball, 9 x 16)
FP = Flip Chip in Package*
FQ = Flip Chip in Sealed Package
F1 = FBGA (62-ball, 13 x 13)
F2 = FBGA (84-ball, 11 x 15)
LG = TQFP
R1 = FBGA (62-ball, 13 x 13, mirrored balls)
R2 = FBGA (84-ball, 11 x 15, mirrored balls)
TG = TSOP (Type II)
TH = TSOP (Type II) extended length
U = µBGA*

*Due to space limitations, FBGA- and µBGA-packaged components and flip chips in packages have an abbreviated part mark that is different from the part number. See our Web site for more information on abbreviated component marks.

Special Processing
ES = Engineering Sample
MS = Mechanical Sample
I = Interim Offering

Operating Temperatures
Commercial (0°C to +70°C) = Blank
Industrial (-40°C to +85°C) = IT**

**The number one (1) and the capital letter "I" utilize the same laser mark—"I."

Special Options
(Multiple processing codes are separated by a space and are listed in hierarchical order.)
L = Low Power
S = Self Refresh††

††On EDO/FPM, designator is required; on SDRAM (>16Mb) this feature is standard, so designator is not required.

Access/Cycle Time

DRAM
(Access Time)
-4 = 40ns
-5 = 50ns
-6 = 60ns
-7 = 70ns

All DRAM
-0 = Untested

SDRAM, x32 DDR SDRAM
(Clock Rate @ CL = 3)
-15 = 66 MHz
-12 = 83 MHz
-10† = 100 MHz
-8x† = 125 MHz
-75† = 133 MHz
-7x† = 143 MHz
-65 = 150 MHz
-6 = 167 MHz
-55 = 183 MHz
-5 = 200 MHz

DDR SDRAM (x4, x8, x16)
(Clock Rate @ CL = 2.5)
-8† = 125 MHz
-75† = 133 MHz
-7E† = 133 MHz
-7† = 143 MHz

Rambus
(Clock Rate)
-4D = 400 MHz, 40ns
-4C = 400 MHz, 45ns
-4B = 400 MHz, 50ns
-3C = 356 MHz, 45ns
-3B = 356 MHz, 50ns
-3M = 300 MHz, 53ns

†**For SDRAM:**
-8E supports PC66 and PC100 (CL = 2 and 3)
-75 supports PC66, PC100 (CL = 2 and 3), and PC133 (CL = 3)
-7 supports PC66, PC100 (CL = 2 and 3), and PC133 (CL = 2 and 3)
-7E supports PC66, PC100 (CL = 2 and 3), and PC133 (CL = 2 and 3)
For DDR SDRAM:
-8 supports PC1600 (2-2-2) DDR200
-75 supports PC2100 (2.5-3-3) DDR266B
-7E supports PC2100 (2-3-3) DDR266A
-7 supports PC2100 (2-2-2) DDR266

DRAM Product guide

Synchronous DRAM – Single Data Rate (SDR) SDRAM

Density	Memory Configuration	Features	Part Number[1]	Packages		Cycle Time (ns)[2]	Samples	Production
				TSOP (TG) Pins	FBGA Balls			
64Mb	16 Meg x 4	Quad bank, 3.3V	MT48LC16M4A2	54	-	7, 7.5	Now	Now
	8 Meg x 8	Quad bank, 3.3V	MT48LC8M8A2	54	-	7, 7.5	Now	Now
	4 Meg x 16	Quad bank, 3.3V	MT48LC4M16A2	54	-	7, 7.5	Now	Now
128Mb	32 Meg x 4	Quad bank, 3.3V	MT48LC32M4A2	54	60	7, 7.5	Now	Now
	16 Meg x 8	Quad bank, 3.3V	MT48LC16M8A2	54	60	7, 7.5	Now	Now
	8 Meg x 16	Quad bank, 3.3V	MT48LC8M16A2	54	-	7, 7.5	Now	Now
256Mb	64 Meg x 4	Quad bank, 3.3V	MT48LC64M4A2	54	60	7, 7.5	Now	Now
	32 Meg x 8	Quad bank, 3.3V	MT48LC32M8A2	54	60	7, 7.5	Now	Now
	16 Meg x 16	Quad bank, 3.3V	MT48LC16M16A2	54	54[3]	7, 7.5	Now	Now
512Mb	128 Meg x 4	Quad bank, 3.3V	MT48LC128M4A2	54	-	7.5	3Q02	1Q03
	64 Meg x 8	Quad bank, 3.3V	MT48LC64M8A2	54	-	7.5	3Q02	1Q03
	32 Meg x 16	Quad bank, 3.3V	MT48LC32M16A2	54	-	7.5	3Q02	1Q03

Note:
[1] Available in industrial temp -75 IT or low power self refresh -75L
[2] -7 = PC133, CL = 2; -7.5 = PC133, CL = 3
[3] Consult Marketing for availability: FBGA expected 2Q02

DRAM Product guide

Synchronous DRAM – Double Data Rate (DDR) SDRAM

Density	Memory Configuration	Features	Part Number	Packages TSOP (TG) Pins	Cycle Time (ns)	Samples	Production
128Mb	32 Meg x 4	Quad bank, 2.5V, SSTL_2	MT46V32M4	66	6, 7.5, 8	Now	Now
	16 Meg x 8	Quad bank, 2.5V, SSTL_2	MT46V16M8	66	6, 7.5, 8	Now	Now
	8 Meg x 16	Quad bank, 2.5V, SSTL_2	MT46V8M16	66	6, 7.5, 8	Now	Now
256Mb	64 Meg x 4	Quad bank, 2.5V, SSTL_2	MT46V64M4	66	7.5, 8	Now	Now
	32 Meg x 8	Quad bank, 2.5V, SSTL_2	MT46V32M8	66	7.5, 8	Now	Now
	16 Meg x 16	Quad bank, 2.5V, SSTL_2	MT46V16M16	66	7.5, 8	Now	Now
512Mb	128 Meg x 4	Quad bank, 2.5V, SSTL_2	MT46V128M4	66	7.5, 8	2Q02	4Q02
	64 Meg x 8	Quad bank, 2.5V, SSTL_2	MT46V64M8	66	7.5, 8	2Q02	4Q02
	32 Meg x 16	Quad bank, 2.5V, SSTL_2	MT46V32M16	66	7.5, 8	2Q02	4Q02

DRAM Product guide

Wide SDRAM

Density	Part Type	Memory Configuration	Features	Part Number	Packages TSOP (TG) Pins	Packages TQFP (LG) Pins	Cycle Time	Samples	Prod.
16Mb	SDRAM	1 Meg x 16	Dual bank, 3.3V	MT48LC1M16A1[4]	50	-	6, 7	Now	Now
64Mb	SDRAM	2 Meg x 32	SDR, Quad bank, pipelined, 3.3V	MT48LC2M32B2[5]	86	-	5, 5.5, 6, 7	Now	Now
	SDRAM	2 Meg x 32	**DDR**, Quad bank, 2.5V, SSTL_2	MT46V2M32	-	100	5, 5.5, 6	Now	Now
128Mb	SDRAM	4 Meg x 32	SDR, Quad bank, pipelined, 3.3V	MT48LC4M32	86	-	7	Now	Now
	SDRAM	4 Meg x 32	**DDR**, Quad bank, 2.5V, SSTL_2	MT46V4M32	-	100	5, 5.5	2Q02	3Q02

Note: [4]Available in industrial temp, -7 SIT
[5]Available in industrial temp, -7 IT

BAT-RAM™ Low Power SDRAM

Density	Part Type	Memory Configuration	Features[6]	Part Number	Packages FBGA Ball	Cycle Time	Samples	Prod.
128Mb	SDRAM	8 Meg x 16	SDR, 2.5V	MT48V8M16LFFF	54	8,10	Now	2Q02
	SDRAM	8 Meg x 16	SDR, 3.3V	MT48LC8M16LFFF	54	8,10	Now	2Q02
256Mb	SDRAM	16 Meg x 16	SDR, 2.5V/1.8V	MT48V16M16LFFG	54	8,10	3Q02	4Q02

Note: [6]All parts have special low power features and low $V_{DD}Q$ available for added power savings.

DRAM Product guide

EDO/FPM DRAM

Density	Memory Configuration	Features	Part Number	Packages		Access Time (ns)	Production
				SOJ (DJ) Pins	TSOP (TG) Pins		
16Mb	4 Meg x 4	EDO, 2K/4K refresh, 5V	MT4C4M4E8/E9	24/26	24/26	50/60	Now
	4 Meg x 4	FPM, 2K/4K refresh, 5V	MT4C4M4B1/A1	24/26	24/26	60	Now
	4 Meg x 4	EDO, 2K/4K refresh, 3.3V	MT4LC4M4E8/E9	24/26	24/26	50/60	Now
	4 Meg x 4	FPM, 2K/4K refresh, 3.3V	MT4LC4M4B1/A1	24/26	24/26	60	Now
	1 Meg x 16	EDO, 1K refresh, 5V	MT4C1M16E5	42	44/50	50/60	Now
	1 Meg x 16	FPM, 1K refresh, 5V	MT4C1M16C3	42	44/50	60	Now
	1 Meg x 16	EDO, 1K refresh, 3.3V	MT4LC1M16E5	42	44/50	50/60	Now
	1 Meg x 16	FPM, 1K refresh, 3.3V	MT4LC1M16C3	42	44/50	60	Now
64Mb	16 Meg x 4	EDO, 4K/8K refresh, 3.3V	MT4LC16M4H9/G3	32	32	50	Now
	16 Meg x 4	FPM, 4K/8K refresh, 3.3V	MT4LC16M4T8/A7	32	32	50	Now
	8 Meg x 8	EDO, 4K/8K refresh, 3.3V	MT4LC8M8C2/P4	32	32	50	Now
	8 Meg x 8	FPM, 4K/8K refresh, 3.3V	MT4LC8M8B6/E1	32	32	50	Now
	4 Meg x 16	EDO, 4K refresh, 3.3V	MT4LC4M16R6	-	50	50	Now
	4 Meg x 16	FPM, 4K refresh, 3.3V	MT4LC4M16F5	-	50	50	Now

RDRAM® Memory

Density	Memory Configuration	Features	Part Number	Packages		Clock Frequency	Samples	Prod.
				FBGA Pins	RBGA Pins			
288Mb	512K x 18 x 32	1.6 GB/s peak I/O bandwidth, 2.5V power supply with 1.8V CMOS supply for I/O	MT6V16M18	86	86	400, 356, 300	TBD[7]	TBD[7]
256Mb	512K x 16 x 32	1.6 GB/s peak I/O bandwidth, 2.5V power supply with 1.8V CMOS supply for I/O	MT6V16M16	86	86	400, 356, 300	TBD[7]	TBD[7]

Note: [7] ***Limited availability***—consult factory for availability

DRAM Module Part Numbering guide - Micron

MT18LSDT1672AG-10EC7

Micron Technology

Number of Memory Components

Process Technology
L = 3.3V
V = 2.5V

Product Family
SD = SDRAM
SDT = SDRAM TSOP
DDT = DDR SDRAM TSOP
SDF = SDRAM FBGA
DDF = DDR SDRAM FBGA

Depth

Width

Module Version
SDRAM
Blank = 168-pin/184-pin DIMM; registered
A = 168-pin/184-pin DIMM; unbuffered, serial presence-detect
U = 100-pin DIMM; unbuffered, serial presence-detect
H = 144-pin/200-pin SODIMM
J = 200-pin DIMM; registered
LH = Low-Power, 144-pin SODIMM
W = 144-pin Micro DIMM

Printed Circuit Board Revision Designator

Die Revision Designator

Memory Bus Speed
66 MHz CAS Latency 2 (-10 SDRAMs) = -662
100 MHz CAS Latency 3 (-8C SDRAMs) = -10C
100 MHz CAS Latency 2 (-8E SDRAMs) = -10E
133 MHz CAS Latency 3 (-75 SDRAMs) = -133
133 MHz CAS Latency 2 (-7E SDRAMs) = -13E
200 MHz data rate, CAS Latency 2 (-8 DDR SDRAMs) = -202
266 MHz data rate, CAS Latency 2.5 (-75 DDR SDRAMs) = -265
266 MHz data rate, CAS Latency 2 (-7 DDR SDRAMs) = -262

Package Code
G = Gold-Plated DIMM
DG = Dual-Bank, Registered, Gold-Plated DIMM
I = Industrial Temp (gold plated)
AGP = AIMM Graphics DIMM

DRAM Module Product Guide – FPM & EDO

Density	Description	Pins	Components on Module	Organisation	Supply & Package	Part Number	Speed ns
4MB	1 Meg x 32 Gold SIMM/Tin SIMM	72	(2)	1 Meg x 16		MT2D132G/M (X)	50,60
4MB	1 Meg x 32 3.3V Gold SODIMM	72	(2)	1 Meg x 16	3.3V TSOP	MT2LDT132HG (X)	60
4MB	1 Meg x 32 3.3V Gold DIMM	100	(2)	1 Meg x 16	3.3V TSOP	MT2LD132UG (X)	60
8MB	2 Meg x 32 Gold SIMM/Tin SIMM	72	(4)	1 Meg x 16		MT4D232DG/M (X)	50,60
8MB	2 Meg x 32 3.3V Gold SODIMM	72	(4)	1 Meg x 16	3.3V TSOP	MT4LDT232HG (X)	60
8MB	2 Meg x 32 3.3V Gold DIMM	100	(4)	1 Meg x 16	3.3V	MT4LD232UG (X)	60
8MB	1 Meg x 64 3.3V Gold SODIMM	144	(4)	1 Meg x 16	3.3V TSOP	MT4LDT164HG (X)	60
8MB	1 Meg x 64 3.3V Gold DIMM	168	(4)	1 Meg x 16	3.3V TSOP	MT4LDT164AG (X)	60
16MB	4 Meg x 32 Gold SIMM/Tin SIMM	72	(8)	4 Meg x 4		MT8D432G/M (X)	50, 60
16MB	4 Meg x 36 ECC Gold SIMM/Tin SIMM	72	(9)	4 Meg x 4		MT9D436G/M (X)	50, 60
16MB	4 Meg x 32 3.3V Gold SODIMM	72	(8)	4 Meg x 4	3.3V TSOP	MT8LDT432HG (X)	60
16MB	4 Meg x 32 3.3V Gold SODIMM	72	(2)	4 Meg x 16	3.3V TSOP	MT2LDT432HG (X)	60
16MB	4 Meg x 32 3.3V Gold DIMM	100	(2)	4 Meg x 16	3.3V TSOP	MT2LDT432UG (X)	60
32MB	8 Meg x 32 Gold SIMM/Tin SIMM	72	(16)	4 Meg x 4		MT16D832G/M (X)	50, 60
32MB	8 Meg x 36 ECC Gold SIMM/Tin SIMM	72	(18)	4 Meg x 4		MT18D836G/M (X)	50, 60
32MB	8 Meg x 32 3.3V Gold SODIMM	72	(4)	4 Meg x 16	3.3V TSOP	MT4LDT832HG (X)	60
32MB	8 Meg x 32 3.3V Gold DIMM	100	(4)	4 Meg x 16	3.3V TSOP	MT4LDT832UG (X)	60
32MB	4 Meg x 64 3.3V Gold SODIMM	144	(4)	4 Meg x 16	3.3V TSOP	MT4LDT464HG (X)(S)	50,60
32MB	4 Meg x 64 3.3V Gold DIMM	168	(4)	4 Meg x 16	3.3V TSOP	MT4LDT464AG (X)	50,60
32MB	4 Meg x 64 3.3V Gold DIMM	168	(16)	4 Meg x 4	3.3V	MT16LD464AG (X)	60
32MB	4 Meg x 72 3.3V ECC Gold DIMM	168	(18)	4 Meg x 4	3.3V	MT18LD472(A)G (X)	60
32MB	4 Meg x 72 3.3V ECC Gold DIMM	168	(5)	4 Meg x 16	3.3V TSOP	MT5LDT472(A)G (X)	60
64MB	8 Meg x 64 3.3V Gold SODIMM	144	(8)	8 Meg x 8	3.3V TSOP	MT8LDT864HG (X)(S)	60
64MB	8 Meg x 64 3.3V Gold DIMM	168	(32)	4 Meg x 4	3.3V	MT32LD864AG (X)	60
64MB	8 Meg x 64 3.3V Gold DIMM	168	(8)	8 Meg x 8	3.3V	MT8LD864AG (X)	50, 60
64MB	8 Meg x 72 3.3V ECC Gold DIMM	168	(36)	4 Meg x 4	3.3V	MT36LD872(A)G (X)	60
64MB	8 Meg x 72 3.3V ECC Gold DIMM	168	(9)	8 Meg x 8	3.3V	MT9LD872(A)G (X)	50, 60
64MB	8 Meg x 72 3.3V ECC Gold DIMM	168	(9)	8 Meg x 8	3.3V TSOP	MT9LDT872G (X)	50, 60
128MB	16 Meg x 64 3.3V Gold DIMM	168	(16)	16 Meg x 4	3.3V	MT16LD1664AG (X)	50,60
128MB	16 Meg x 72 3.3V ECC Gold DIMM	168	(18)	16 Meg x 4	3.3V	MT18LD1672(A)G (X)	50,60
128MB	16 Meg x 72 3.3V ECC Gold DIMM	168	(18)	16 Meg x 4	3.3V TSOP	MT18LDT1672G (X)	50,60
256MB	32 Meg x 72 3.3V ECC Gold DIMM	168	(36)	16 Meg x 4	3.3V	MT36LD3272G (X)	50, 60
256MB	32 Meg x 72 3.3V ECC Gold DIMM	168	(36)	16 Meg x 4	3.3V TSOP	MT36LDT3272G (X)	50, 60

(X) -EDO; no "X" denotes FPM version **(A)** -8-CAS; SPD version; unbuffered (no "A" denotes buffered version for x72 DIMMs) **(S)** -Self Refresh

DRAM Module Product Guide – SDRAM

Density	Description	Pins	Components on Module	Organisation	Supply and Package	Base Part Number	Speed Mhz
2GB	256 Meg x 72 3.3V ECC Gold DIMM	168	(36)	128 Meg x 4	3.3V TSOP	MT36LSDT25672G	133, 100
1GB	128 Meg x 72 3.3V ECC Gold DIMM	168	(36)	64 Meg x 4	3.3V FBGA	MT36LSDF12872G	133, 100
1GB	128 Meg x 72 3.3V ECC Gold DIMM	168	(36)	64 Meg x 4	3.3V TSOP	MT36LSDT12872G	133, 100
512MB	64 Meg x 72 3.3V ECC Gold DIMM	168	(36)	32 Meg x 4	3.3V FBGA	MT36LSDF6472G	133, 100
512MB	64 Meg x 64 3.3V Gold DIMM	168	(16)	32 Meg x 8	3.3V TSOP	MT16LSDT6464AG	133, 100
512MB	64 Meg x 64 3.3V Gold SODIMM	144	(16)	32 Meg x 8	3.3V FBGA	MT16LSDF6464HG	133, 100
512MB	64 Meg x 72 3.3V ECC Gold DIMM	168	(18)	32 Meg x 8	3.3V TSOP	MT18LSDT6472AG	133, 100
512MB	64 Meg x 72 3.3V ECC Gold DIMM	168	(18)	64 Meg x 4	3.3V TSOP	MT18LSDT6472G	133, 100
512MB	64 Meg x 72 3.3V ECC Gold DIMM	168	(18)	32 Meg x 8	3.3V TSOP	MT18LSDT6472DG	133, 100
512MB	64 Meg x 72 3.3V ECC Gold DIMM	168	(18)	64 Meg x 4	3.3V FBGA	MT18LSDF6472G	133, 100
256MB	32 Meg x 72 3.3V ECC Gold DIMM	168	(18)	32 Meg x 4	3.3V TSOP	MT18LSDT3272G	133, 100
256MB	32 Meg x 72 3.3V ECC Gold DIMM	168	(18)	16 Meg x 8	3.3V TSOP	MT18LSDT3272DG	133, 100
256MB	32 Meg x 72 3.3V ECC Gold DIMM	168	(9)	32 Meg x 8	3.3V TSOP	MT9LSDT3272AG	133, 100
256MB	32 Meg x 72 3.3V ECC Gold DIMM	168	(9)	32 Meg x 8	3.3V TSOP	MT9LSDT3272G	133, 100
256MB	32 Meg x 72 3.3V ECC Gold DIMM	168	(18)	16 Meg x 8	3.3V TSOP	MT18LSDT3272AG	133, 100
256MB	32 Meg x 64 3.3V Gold DIMM	168	(16)	16 Meg x 8	3.3V TSOP	MT16LSDT3264AG	133, 100
256MB	32 Meg x 64 3.3V Gold SODIMM	144	(8)	16 Meg x 16	3.3V TSOP	MT8LSDT3264HG	133, 100
256MB	32 Meg x 64 3.3V Gold DIMM	168	(8)	32 Meg x 8	3.3V TSOP	MT8LSDT3264AG	133, 100
256MB	32 Meg x 64 3.3V Gold Micro DIMM	144	(8)	32 Meg x 8	3.3V FBGA	MT8LSDF3264WG	133, 100
256MB	32 Meg x 64 3.3V Gold SODIMM	144	(16)	16 Meg x 8	3.3V FBGA	MT16LSDF3264HG	133, 100

DRAM Module Product Guide – SDRAM

Density	Description	Pins	Components on Module	Organisation	Supply and Package	Base Part Number	Speed Mhz
128MB	16 Meg x 72 3.3V ECC Gold DIMM	168	(9)	16 Meg x 8	3.3V TSOP	MT9LSDT1672AG	133, 100
128MB	16 Meg x 72 3.3V ECC Gold DIMM	168	(5)	16 Meg x 16	3.3V TSOP	MT5LSDT1672AG	133, 100
128MB	16 Meg x 72 3.3V ECC Gold DIMM	168	(9)	16 Meg x 8	3.3V TSOP	MT9LSDT1672G	133, 100
128MB	16 Meg x 72 3.3V ECC Gold DIMM	168	(18)	16 Meg x 4	3.3V TSOP	MT18LSDT1672G	133, 100
128MB	16 Meg x 72 3.3V ECC Gold DIMM	168	(18)	8 Meg x 8	3.3V TSOP	MT18LSDT1672AG	133, 100
128MB	16 Meg x 64 3.3V Gold DIMM	168	(8)	16 Meg x 8	3.3V TSOP	MT8LSDT1664AG	133, 100
128MB	16 Meg x 64 3.3V Gold DIMM	168	(4)	16 Meg x 16	3.3V TSOP	MT4LSDT1664AG	133, 100
128MB	16 Meg x 64 3.3V Gold Micro DIMM	144	(4)	16 Meg x 16	3.3V TSOP	MT4LSDT1664WG	133, 100
128MB	16 Meg x 64 3.3V Gold SODIMM	144	(4)	16 Meg x 16	3.3V TSOP	MT4LSDT1664HG	133, 100
128MB	16 Meg x 64 3.3V Gold DIMM	168	(16)	8 Meg x 8	3.3V TSOP	MT16LSDT1664AG	133, 100
128MB	16 Meg x 64 3.3V Gold SODIMM	144	(8)	8 Meg x 16	3.3V TSOP	MT8LSDT1664HG	133, 100
128MB	32 Meg x 32 3.3V Gold DIMM	100	(8)	16 Meg x 8	3.3V TSOP	MT8LSDT3232UG	125, 100
64MB	8 Meg x 72 3.3V ECC Gold DIMM	168	(9)	8 Meg x 8	3.3V TSOP	MT9LSDT872G	133, 100
64MB	8 Meg x 72 3.3V ECC Gold DIMM	168	(9)	8 Meg x 8	3.3V TSOP	MT9LSDT872AG	133, 100, 66
64MB	8 Meg x 72 3.3V Gold DIMM	168	(5)	8 Meg x 16	3.3V TSOP	MT5LSDT872AG	133, 100
64MB	8 Meg x 64 3.3V Gold DIMM	168	(4)	8 Meg x 16	3.3V TSOP	MT4LSDT864AG	133, 100, 66
64MB	8 Meg x 64 3.3V Gold Micro DIMM	144	(4)	8 Meg x 16	3.3V TSOP	MT4LSDT864WG	133
64MB	8 Meg x 64 3.3V Gold DIMM	168	(8)	8 Meg x 8	3.3V TSOP	MT8LSDT864AG	133, 100, 66
64MB	8 Meg x 64 3.3V Gold SODIMM	144*	(4)	8 Meg x 16	3.3V TSOP	MT4LSDT864HG	133, 100, 66
64MB	8 Meg x 64 3.3V Gold SODIMM	144*	(8)	8 Meg x 8	3.3V TSOP	MT8LSDT864HG	66
64MB	16 Meg x 32 3.3V Gold DIMM	100	(4)	16 Meg x 8	3.3V TSOP	MT4LSDT1632UG	125, 100
64MB	16 Meg x 32 3.3V Gold DIMM	100	(4)	8 Meg x 16	3.3V TSOP	MT4LSDT1632UDG	125, 100

DRAM Module Product Guide – SDRAM

Density	Description	Pins	Components on Module	Organisation	Supply and Package	Base Part Number	Speed Mhz
32MB	4 Meg x 64 3.3V Gold SODIMM	144*	(4)	4 Meg x 16	3.3V TSOP	MT4LSDT464HG	66
32MB	4 Meg x 64 3.3V Gold DIMM	168	(4)	4 Meg x 16	3.3V TSOP	MT4LSDT464AG	133, 100, 66
32MB	4 Meg x 72 3.3V ECC Gold DIMM	168*	(5)	4 Meg x 16	3.3V TSOP	MT5LSDT472AG	133, 100, 66
32MB	8 Meg x 32 3.3V Gold DIMM	100	(4)	4 Meg x 16	3.3V TSOP	MT4LSDT832UDG	125, 100
16MB	4 Meg x 32 3.3V Gold DIMM	100	(2)	4 Meg x 16	3.3V TSOP	MT2LSDT432UG	125, 100
8MB	2 Meg x 32 3.3V Gold DIMM	100	(4)	1 Meg x 16	3.3V TSOP	MT4LSDT232UDG	125, 100
4MB	1 Meg x 32 3.3V Gold DIMM	100	(2)	1 Meg x 16	3.3V TSOP	MT2LSDT132UG	125, 100

*For 168-pin DIMMs (66 MHz/100 MHz), adheres to Intel's 4-Clock SDRAM module specs (66 MHz will use -10 components; 100 MHz will use -8 components).
For 100-pin DIMMs, 100 MHz uses -10 components; adheres to JEDEC standard.

SS - Single Sided **DS** - Double Sided **G** - Gold Plated **U** - 100-pin DIMM **UDG** - Double-sided, dual-bank 100-pin DIMM

(H) - Small-Outline DIMM (SODIMM) **LP** - Low Power **(A)** - 8-CAS; SPD version; unbuffered (no "A" denotes registered version for x72 DIMMs)

(W) - Micro DIMM **1U** - Reduced height for 1U servers

DRAM Module Product Guide – DDRDRAM

Density	Description	Pin	Components	Organisa	Packa	Base Part Number	Speed Mhz
512MB	64 Meg x72 ECC 2.5V Gold DIMM	184	(18)	32 Meg x 8	TSOP	MT18VDDT6472AG	266,200
512MB	64 Meg x72 ECC 2.5V Gold DIMM	184	(18)	32 Meg x 8	TSOP	MT18VDDT6472DG	266,200
512MB	64 Meg x72 ECC 2.5V Gold DIMM	184	(18)	64 Meg x 4	TSOP	MT18VDDT6472G	266,200
256MB	32 Meg x72 ECC 2.5V Gold DIMM	184	(18)	16 Meg x 8	TSOP	MT18VDDT3272AG	266,200
256MB	32 Meg x72 ECC 2.5V Gold DIMM	184	(18)	32 Meg x 4	TSOP	MT18VDDT3272G	266,200
256MB	32 Meg x72 ECC 2.5V Gold DIMM	184	(18)	16 Meg x 8	TSOP	MT18VDDT3272DG	266,200
256MB	32 Meg x72 ECC 2.5V Gold DIMM	184	(9)	32 Meg x 8	TSOP	MT9VDDT3272AG	266,200
256MB	32 Meg x72 ECC 2.5V Gold DIMM	184	(9)	32 Meg x 8	TSOP	MT9VDDT3272G	266,200
256MB	32 Meg x64 2.5V Gold DIMM	184	(16)	16 Meg x 8	TSOP	MT16VDDT3264AG	333,266,200
256MB	32 Meg x64 2.5V Gold SODIMM	200	(8)	16 Meg x 16	TSOP	MT8VDDT3264HDG	266,200
256MB	32 Meg x64 2.5V Gold DIMM	184	(8)	32 Meg x 8	TSOP	MT8VDDT3264AG	266,200
128MB	16 Meg x64 2.5V Gold DIMM	184	(8)	16 Meg x 8	TSOP	MT8VDDT1664AG	333,266,200
128MB	16 Meg x64 2.5V Gold SODIMM	200	(8)	8 Meg x 16	TSOP	MT8VDDT1664HDG	266,200
128MB	16 Meg x 64 2.5V Gold SODIMM	200	(4)	16 Meg x 16	TSOP	MT4VDDT1664HG	266,200
128MB	16 Meg x 64 2.5V Gold DIMM	184	(4)	16 Meg x 16	TSOP	MT4VDDT1664AG	266,200
128MB	16 Meg x 64 2.5V Gold Micro DIMM	172	(4)	16 Meg x 16	TSOP	MT4VDDT1664WG	266,200
128MB	16 Meg x72 ECC 2.5V Gold DIMM	184	(9)	16 Meg x 8	TSOP	MT9VDDT1672AG	266,200
128MB	16 Meg x72 ECC 2.5V Gold DIMM	184	(5)	16 Meg x 16	TSOP	MT5VDDT1672AG	266,200
128MB	16 Meg x72 ECC 2.5V Gold SODIMM	200	(5)	16 Meg x 16	TSOP	MT5VDDT1672HG	266,200
128MB	16 Meg x72 ECC 2.5V Gold DIMM	184	(9)	16 Meg x 8	TSOP	MT9VDDT1672G	266,200
64MB	8 Meg x 64 2.5V Gold SODIMM	200	(4)	8 Meg x 16	TSOP	MT4VDDT864HG	266,200
64MB	8 Meg x 64 2.5V Gold DIMM	184	(4)	8 Meg x 16	TSOP	MT4VDDT864AG	266,200
64MB	8 Meg x 72 ECC 2.5V Gold DIMM	184	(5)	8 Meg x 16	TSOP	MT5VDDT872AG	266,200
64MB	8 Meg x 72 ECC 2.5V Gold SODIMM	200	(5)	8 Meg x 16	TSOP	MT5VDDT872HG	266,200
64MB	8 Meg x 64 2.5V Gold Micro DIMM	172	(4)	8 Meg x 16	TSOP	MT4VDDT864WG	266200

SS - Single Sided **DS** - Double Sided **G** - Gold Plated **(H)** - Small-Outline DIMM (SODIMM)

(A) - 8-CAS; SPD version; unbuffered (no "A" denotes registered version for x72 DIMMs) **(W)** - Micro DIMM **1U** - Reduced height for 1U servers

FLASH Glossary

BOOT BLOCK FLASH – secured block stores the startup portion of the software.

BOTTOM BOOT FLASH – bottom memory location on memory array. - Motorola Processor

BURST MODE - Faster read access times - 18ns (typical = 65ns) - Specific Processor support burst mode.

COMMON FLASH INTERFACE – CFI – Data book on a chip. Extension of Electronic ID, sector sizes, see below.

COMPACT FLASH - A small form factor for removable storage cards.

DUAL BANK FLASH - Same as Simultaneous Read/Write.

EPROM - (Electrically programmable read only memory)

EEPROM - Electrically erasable programmable read only memory. (Parallel 1 bit at a time or Serial + 1 bit aat)

ELECTRONIC ID – Allows system to read device type and manufacturer to select correct algorithms for device.

ENHANCED BOOTBLOCK - Advanced Boot Block compatible. (Micron)

EVEN-SECTORED FLASH – All sectors within the flash device are the same size.

FLASH - is a type of non-volatile memory. (NOR - Code Storage & NAND - Data Storage)

NAND – High-density non-volatile memory, serial accessed flash technology. (Digital Film) - Data Storage

NOR FLASH – Random accessed flash technology, for code execution. (Cellular) - Code Storage

PAGE MODE - Faster Page Access Time than standard flash.

SECTORED FLASH – Entire array is equally divided.

SIRUS FLASH - StrataFlash compatible - Single bit per cell. (Micron)

SMART VOLTAGE FLASH – Enables use of multiple power supplied on one Chip.

STRATA FLASH - 2 bits per cell - doubles density (Intel) (Code/Storage same device)

SIMULTANEOUS READ/WRITE - One Bank Reads, while one writes simultaneous. (Code/Storage same device)

SYMMETRICAL BLOCK FLASH – Even block sizes.

SYNC FLASH - Consolidates DRAM, Flash and ROM on one Device. (SDRAM Interface) Micron

TOPBOOT FLASH – Top memory location on memory array. - Intel Processor

FLASH Part numbering guide - AMD

AM29F 040 B -90 E C

Size/Org

010 = 1Mb, (x8) Uniform
100 = 1Mb, (x8/x16) Boot
102 = 1Mb, (x16) Boot
002 = 2Mb, (x8) Boot
022 = 2Mb, (x8) Boot
200 = 2Mb, (x8/x16) Boot
040 = 4Mb, (x8) Uniform
004 = 4Mb, (x8) Boot
400 = 4Mb, (x8/x16) Boot
008 = 8Mb, (x8) Boot
080 = 8Mb, (x8) Uniform
800 = 8Mb, (x8/x16) Boot
016 = 16Mb, (x16) Uniform
160 = 16Mb, (x8/x16) Boot
320 = 32Mb, (x16) Boot
032 = 32Mb, (x16) Uniform
640 = 64Mb, (x16) Boot

Revision

Access Speed

Package

E = TSOP
P = PDIP
S= SOP 44 pin
Z = SSOP 56 pin
J = PLCC
WA=FBGA 48 ball(6x8mm)
WB =FBGA 48 ball(6x9mm)
WC=FBGA 48 ball(8x9mm)
WD=FBGA 63ball(8x14mm)
WH=FBGA 63ball(12x11m)

Temp. Range

C= 0-70
E=-55 to + 125
I =-40 to +85

FLASH MEMORY DEVICE FAMILY

Am29BDS	=	1.8 Volt-only, Simultaneous Read/Write, Burst Mode
Am29DS	=	1.8 Volt-only, Simultaneous Read/Write
Am29PDS	=	1.8 Volt-only, Simultaneous Read/Write, Page Mode
Am29SL	=	1.8 Volt-only
Am29BDD	=	2.5 Volt-only, Simultaneous Read/Write, Burst Mode
Am29LV	=	3 Volt-only
Am29DL	=	3 Volt-only, Simultaneous Read/Write
Am29BL	=	3 Volt-only, Burst Mode
Am29PL	=	3 Volt-only, Page Mode
Am29PDL	=	3 Volt-only, Simultaneous Read/Write, Page Mode
Am30LV	=	3 Volt-only, UltraNAND™
Am29F	=	5 Volt-only

FLASH Part numbering guide - ST

M29 X XXX X X XX XX X

M28 "Intel"
M29 "AMD"
M5X "ST"

Voltage
F = 5V
W = 3V

Density
010 = 1Mb, (x8) Uniform
100 = 1Mb, (x8/x16) Boot
102 = 1Mb, (x16) Boot
002 = 2Mb, (x8) Boot
022 = 2Mb, (x8) Boot
200 = 2Mb, (x8/x16) Boot
040 = 4Mb, (x8) Uniform
004 = 4Mb, (x8) Boot
400 = 4Mb, (x8/x16) Boot
008 = 8Mb, (x8) Boot
080 = 8Mb, (x8) Uniform
800 = 8Mb, (x8/x16) Boot
016 = 16Mb, (x16) Uniform
160 = 16Mb, (x8/x16) Boot
320 = 32Mb, (x16) Boot
032 = 32Mb, (x16) Uniform
640 = 64Mb, (x16) Boot

Die Revision

Memory Block
B = Bottom Block
T = Top Block
Blank = Uniform

Speed
25 = 25 ns
35 = 35 ns
45 = 45 ns
55 = 55 ns
70 = 70 ns
80 = 80 ns
85 = 85 ns
90 = 90 ns
10 = 100 ns
12 = 120 ns
15 = 150 ns

Package
B = PDIP
N, NZ = TSOP
K = PLCC 32
M = SO44
ZA = FBGA
ZB = BGA
ZC = TFBGA
Gx = uBGA

Temperature
1 = 0 to 70 ºC
3 = -40 to 125 ºC
6 = -40 to 85 ºC

FLASH Part numbering guide - Intel

TE28F320 C 3 B C 90

Package

Commercial Temp
DA = SSOP
E = TSOP
G = 0.75mm UBGA
N = PLCC
P = PDIP
PA = PSOP
RC = Easy BGA

Ext. Temp
DT = SSOP
GE = 0.75mm VF BGA
GT = 0.75mm UBGA
RC = Easy BGA
RD = Stacked CSP
TB = PSOP
TE = TSOP

Size/Org
00X=X8
X00=X16

Prod.Identifier
B = Boot Block
C = Advanced Boot
D = Dual Plane
F = Fast Boot
J = Strataflash TM
S = Flashfile TM
W = Wireless
K = Sync Strataflash TM

Voltage
5 = 4.5-5.5V
3 = 2.7-3.6V
18 = 1.65-1.95V

Process Indentifier
A = 0.25µ
C = 0.18µ

Boot Position
B = Bottom
T = Top

Access Speed

FLASH Part numbering guide - Micron

MT 28F 008 B3VG - 8 B ET

Micron Technology

Dual-Supply Flash
28F = Dual Supply

Density/Organization
00X = x8 only (X = 2, 4, 8)
X00 = x8/x16 selectable (X = 2, 4, 8)
XX0 = x8/x16 selectable (XX = 16, 32, 64)

Voltage*/Block Organization
B3 = Smart 3 (3.3V V_{CC}/3.3V, 5V or 12V V_{PP}*), Boot Block
B5 = Smart 5 (5V V_{CC}/5V or 12V V_{PP}*), Boot Block
- Drop-in compatible with Intel® "B5"

J3 = Smart 3 (2.7V–3.6V V_{CC}/ 2.7V–3.6V, 5V V_{PEN}), Even Sectored (new, 0.18µm)

*For backward compatibility with SmartVoltage (B1) devices, 12V V_{PP} is supported on the 0.3µm Smart 3 (B3) and Smart 5 (B5) devices; however, 5V V_{PP} is optimal for application and production programming and is recommended for compatibility with future process technology advancements.

Package Code
RG = 56-pin TSOP Type I
SG = 44-pin SOP
VG = 40-pin TSOP Type I
WG = 48-pin TSOP Type I

Access Time
-8 = 80ns
-9 = 90ns
-10 = 100ns
-12 = 120ns

Boot Block Starting Address
B = Bottom Boot
- Most other applications

T = Top Boot
- For Intel Pentium and x86 Processors

Operating Temperature Options
Blank = Commercial (0˚C to +70˚C)
ET = Extended Temperature
(Refer to -40˚C to +85˚C specification)

Flash Product Guide

Mfr	Density	Organisation	Supply type	Part No.	Package	Speed (ns)
AMD	1Mb	x8	5V +/-10% (+/-5%)	Am29F010B	PDIP/PLCC32/TSOP32/KGD	55 -120 (45)
AMD	1Mb	x8	2.7V - 3.6V (3.0V - 3.6V)	Am29LV010B	PLCC32/TSOP32	55 - 90 (45)
ST	1Mb	x8	5V	M29F010B	PLCC32/TSOP32	45-120
ST	1Mb	x16	5V	M29F102B	TSOP40/PLCC44	35-70
ST	1Mb	x8	3 V	M29W010B	PLCC32/TSOP32	45-90
ST	1Mb	x16	3 V	M29W102B	TSOP40/PLCC44	50-70
AMD	2Mb	x8	5V +/-10% (+/-5%)	Am29F002B	PDIP32/PLCC32/TSOP32	70-120 (55)
AMD	2Mb	x8/x16 selectable	5V +/-10% (+/-5%)	Am29F200B	TSOP48/PSOP44	55-120 ((45/50)
AMD	2Mb	x8/x16 selectable	2.7V - 3.6V (3.0V - 3.6V)	Am29LV200B	TSOP48/PSOP44	70 -120 (55)
ST	2Mb	x8	5V	M29F002B	PLCC32/TSOP32	45-120
ST	2Mb	x8/x16 selectable	5V	M29F200B	TSOP48/PSOP44	45-90
ST	2Mb	x8	3 V	M29W022B	PLCC32	55-90
ST	2Mb	x8/x16 selectable	3 V	M29W200B	TSOP48/PSOP44	55-120

Flash Product Guide

Mfr	Density	Organisation	Supply type	Part No.	Package	Speed (ns)
AMD	4Mb	x8/x16 selectable	2.7V - 3.6V	Am29DL400B	TSOP/RTSOP48, SO44	70 - 120
AMD	4Mb	x8	5V +/-10% (+/-5%)	Am29F004B	PLCC	70-90 (55)
AMD	4Mb	x8	5V +/-10% (+/-5%)	Am29F040B	PDIP32/PLCC32/TSOP32	70-150 (55)
AMD	4Mb	x8/x16 selectable	5V +/-10% (+/-5%)	Am29F400B	TSOP48/PSOP44	55-150 (45-55)
AMD	4Mb	x8	2.7V - 3.6V	Am29LV004B	TSOP40	70 - 120
AMD	4MB	x8	2.7V - 3.6V (3.0V - 3.6V)	Am29LV040B	PLCC32/TSOP32	70 -120 (60)
Intel	4Mb	x8/x16 selectable	Single supply 5V & 3v boot block	28F400B3	TSOP48/PSOP44	85-90
Intel	4Mb	x8/x16 selectable	Single supply 5V & 3v boot block	28F400B5	TSOP48/PSOP44	60-80
Intel	4Mb	x8	Single supply 5V & 3v boot block	E28F400B3	TSOP40	70-120
MICRON	4Mb	x8	3 V	MT28F004B3	TSOP-40	80-100
MICRON	4Mb	x8	5 V	MT28F004B5	TSOP-40	60-80
MICRON	4Mb	x8/x16 selectable	3 V	MT28F400B3	TSOP-48, SOP-44	80-100
MICRON	4Mb	x8/x16 selectable	5 V	MT28F400B5	TSOP-48, SOP-44	60-80
ST	4Mb	x8	5V	M29F040B	PLCC32/TSOP32	45-90
ST	4Mb	x8/x16 selectable	5V	M29F400B	TSOP48/PSOP44	45-90
ST	4Mb	x8	3 V	M29W004B	TSOP40	55-120
ST	4Mb	x8	3 V	M29W040B	PLCC32/TSOP32	55-120
ST	4Mb	x8/x16 selectable	3 V	M29W400B	TSOP48/PSOP44/ FBGA48	55-120
AMD	4Mb	x8/x16 selectable	2.7V - 3.6V (3.0V - 3.6V)	Am29LV400B	TSOP48/PSOP44	70 -120 (55)

Flash Product Guide

Mfr	Density	Organisation	Supply type	Part No.	Package	Speed (ns)
AMD	8Mb	x8/x16 selectable	2.7V - 3.6V	Am29DL800B	TSOP/RTSOP48, SO44, FBGA48	70 - 120
AMD	8Mb	x8	5V +/-10% (+/-5%)	Am29F080B	TSOP48/PSOP44	70-150 (55)
AMD	8Mb	x8/x16 selectable	5V +/-10%	Am29F800B	TSOP48/PSOP44/FBGA48	55-150
Intel	8Mb	x8	Single supply 5V & 3v boot block	28F008B3	TSOP40/UBGA48	85-120
Intel	8Mb	x8	Single supply 5V & 3v boot block	28F008S5	TSOP40/PSOP44	70-120
Intel	8Mb	x8/x16 selectable	Single supply 5V & 3v boot block	28F800B3	TSOP48	80-110
Intel	8Mb	x8/x16 selectable	Single supply 5V & 3v boot block	28F800B5	TSOP48/PSOP44	70-80
MICRON	8Mb	x8	3 V	MT28F008B3	TSOP-40	90-100
MICRON	8Mb	x8	5 V	MT28F008B5	TSOP-40	80
MICRON	8Mb	x8/x16 selectable	3 V	MT28F800B3	TSOP-48, SOP-44	90-100
MICRON	8Mb	x8/x16 selectable	5 V	MT28F800B5	TSOP-48, SOP-44	80
ST	8Mb	x8	5V	M29F080A	TSOP40/PSOP4	70-120
ST	8Mb	x8/x16 selectable	5V	M29F800A	TSOP48/PSOP44	70-90
ST	8Mb	x8	3 V	M29W008A	TSOP40	80-120
ST	8Mb	x8/x16 selectable	3 V	M29W800A	TSOP48/PSOP44/	80-120
ST	8Mb	x16	1,8 V	M59DR008F	FBGA-48	100 (35)
AMD	8Mb	x8/x16 selectable	2.7V - 3.6V	Am29LV800B	TSOP48/PSOP44	70 -120
AMD	8Mb	x8/x16 selectable	1.8 - 2.2V	Am29SL800C	TSOP48/RTSOP48/FBGA48	100-150
ST	8Mb	x16	1.8V	M59DR008	FBGA48	100 (35)
ST	8Mb	x32	5V	M59BF008B		

Flash Product Guide

Mfr	Density	Organisation	Supply type	Part No.	Package	Speed (ns)
AMD	16Mb	x8/x16 selectable	2.3V - 2.75V	Am29BDD160G	FBGA80	54, 60, 68 (14/20)
AMD	16Mb	x8/x16 selectable	2.7V - 3.6V	Am29DL162D	TSOP48/FBGA48	70-120
AMD	16Mb	x8/x16 selectable	1.8V - 2.2V	Am29DS163D	FBGA-48	100-120
AMD	16Mb	x16	5V +/-10%	Am29F016D	TSOP/RTSOP 40 /48, PSOP44	70-150
AMD	16Mb	x8	5V +/-10%	Am29F017D	TSOP/RTSOP 40 /48	70-150
AMD	16Mb	x8/x16 selectable	5V +/-10% (+/-5%)	Am29F160D	TSOP/RTSOP 48	90/120 (70/75)
AMD	16Mb	x8	3.0V - 3.6V	Am29LV116D	TSOP40	70 - 120
AMD	16Mb	x8	2.7V - 3.6V	Am29LV116M	TSOP/RTSOP40	70 - 120
AMD	16Mb	x8/x16 selectable	2.7V - 3.6V	Am29LV160D	TSOP48/FBGA48	70 - 120
AMD	16Mb	x8/x16 selectable	2.7V - 3.6V	Am29LV160M	TSOP/RTSOP48, FBGA48/64	70 - 120
Intel	16Mb	x8	Single supply 5V & 3v boot block	28F016B3	TSOP40/UBGA48	85-120
Intel	16Mb	x8/x16 selectable	Single supply 5V & 3v boot block	28F160B3	TSOP48/FBGA48/uBGA48	70-110
Intel	16Mb	x16	Single supply 5V & 3v boot block	28F160B3	TSOP48/FBGA48	70-110
MICRON	16Mb	x16	2.7-3.3 V	MT28F160x3FD	FBGA	90
ST	16Mb	x8	5V	M29F016D	TSOP40/SO44	55-90
ST	16Mb	x8/x16 selectable	3 V	M29W160D	TSOP48/FBGA48/	70-120
ST	16Mb	x8/x16 selectable	5V	M29F160D	TSOP48	55-90
AMD	16Mb	x8/x16 selectable	1.8 - 2.2V	Am29SL160C	TSOP48/FBGA48	90-150
ST	16Mb	x32	3V	M59BW016B		

Flash Product Guide

Mfr	Density	Organisation	Supply type	Part No.	Package	Speed (ns)
AMD	32Mb	x16	1.7V - 1.9V	Am29BDS323D	FBGA-47	20
AMD	32Mb	x8/x16 selectable	2.7V - 3.6V	Am29DL322G	TSOP48/FBGA63	70-120
AMD	32Mb	x8/x16 selectable	1.8V - 2.2V	Am29DS323D	TSOP-48, FBGA-48	110-120
AMD	32Mb	x8	5V +/-10% (+/-5%)	Am29F032B	TSOP/RTSOP 40, PSOP44	90-150 (50/55)
AMD	32Mb	x8	2.7V - 3.6V	Am29LV033C	TSOP-40, RTSOP-40, FBGA-63	70-120
ITL	32Mb	2 M x 16	2.7-3.6 V	28F320B3	TSOP-48, BGA-48	70-90
ITL	32Mb	2 M x 16	2.7-3.6 V	28F320C3	TSOP-48, BGA-64	70-90
ITL	32Mb	4 M x 8, 2 M x 16	2.7-3.6 V	28F320J3	TSOP-56, BGA-64	110
ITL	32Mb	4 M x 8, 2 M x 16	4.5-5.5 V	28F320J5	TSOP-56, SSOP-56	120
ITL	32Mb	2 M x 16	1.7-1.9 V	28F320W	BGA-56	70-85
MICRON	32Mb	x16	1.65-1.95 V; 1.8-2.2 V	MT28F321x	FBGA	100
ST	32Mb	x16	3 V	M28W320C	TSOP-48, FBGA-47	90-100
ST	32Mb	x16	1,8 V	M59DR032	TSOP-48, FBGA-48	100 (35)
ST	32Mb	x16	1,8 V	M59MR032	FBGA-46	100 (35)
AMD	32Mb	x8/x16 selectable	2.7V - 3.6V	Am29LV320D	TSOP-48, FBGA-48	90-120
AMD	32Mb	x8/x16 selectable	2.7V - 3.6V	Am29LV320M	TSOP-48/56, FBGA-48/64	90-120
AMD	32Mb	x16	1.8 - 2.2V	Am29PDS322D	FBGA48	100 (40) -120 (50)
ST	32Mb	x16	1.8V	M59MR032	uBGA46	100 (35)
ST	32Mb	x16	1.8V	M59DR032	FBGA48	100 (35)
MICRON	32Mb	x8/x16 selectable	2.7V - 3.6V	MT28F320J3	TSOP56	100

Flash Product Guide

Mfr	Density	Organisation	Supply type	Part No.	Package	Speed (ns)	Comment
AMD	64Mb	x16	1.65V - 1.95V	Am29BDS640G	FBGA-60	70 (13.5-20)	Sim w/r with burst mode
AMD	64Mb	x16	1.7V - 1.9V	Am29BDS643D	FBGA-44	11, 12.5, 20	Top Boot only
AMD	64Mb	x8/x16 selectable	2.7V - 3.6V	Am29DL640G	TSOP48/FBGA63	90-120	Simultaneous read-write
AMD	64Mb	x8	3.0V - 3.6V	Am29LV065D	TSOP-48, RTSOP-48, FBGA-63	90-120	Uniform sectored
AMD	64Mb	x8	2.7V - 3.6V	Am29LV065M	TSOP-48, RTSOP-48, FBGA-63	90-120	(Mirror Bit) Uniform sectored
ITL	64Mb	8 M x 8, 4 M x 16	2.7-3.6 V	28F640J3	TSOP-56, BGA-64	120	3 V Uniform
ITL	64Mb	4 M x 16	1.7-1.9 V	28F640W	BGA-56	70-85	1,8 Boot
ITL	64Mb	4 M x 16	2.7-3.6 V	28F64K3	BGA-64	110	3V Sync
AMD	64Mb	x16	3.0V - 3.6V	Am29LV640D	SSOP56, FBGA-63, FBGA-64	90-120	High/Low/Uniform
AMD	64Mb	x8/x16 selectable	3.0V - 3.6V	Am29LV640M	TSOP/RTSOP48/56, FBGA63/64	90-120	(Mirror Bit) High/Low/Uniform/Top/Bttm
AMD	64Mb	x16	3.0V - 3.6V	Am29LV641D	TSOP48 / RTSOP48	90-120	High/Low/Uniform
AMD	64Mb	x16	2.7V - 3.6V	Am29LV641M	TSOP48 / RTSOP48	90-120	(Mirror Bit) High/Low
ST	64Mb	x16/32	2.7V - 3.6V	M58LW064	TSOP56, TBGA64/80	150 (25)	Uniform sectored
MICRON	64Mb	x8/x16 selectable	2.7V - 3.6V	MT28F640J3	TSOP56	120	Smart3 Even sectored
AMD	128Mb	x8	2.7V - 3.6V	Am29LV128M	TSOP/RTSOP54, FBGA64	90-120	(Mirror Bit) Uniform sectored
ITL	128Mb	16 M x 8, 8 M x 16	2.7-3.6 V	28F128J3	TSOP-56, BGA-64	150	3 V Uniform
ITL	128Mb	8 M x 16	2.7-3.6 V	28F128K3	BGA-64	115	3V Sync
ITL	128Mb	8 M x 16	1.7-1.9 V	28F128W	BGA-56	70-85	1,8 Boot
AMD	128Mb	x16	2.7V-3.6V	Am29LV642M	FBGA63	90-120	(Mirror Bit) Uniform sectored
AMD	128Mb	x8/x16 selectable	2.7V - 3.6V	Am29PDL128G	FBGA80	70/80 (25/30)	Sim w/r with Page mode
AMD	256Mb	x8/x16 selectable	2.7V - 3.6V	Am29LV256M	TSOP/RTSOP54, FBGA64	90-120	(Mirror Bit) High/Low
ITL	256Mb	16 M x 16		28F256K3	BGA-64	120	3V Sync

SRAM Glossary

CACHE - High speed memory device (SRAM) located between the CPU and system DRAM.
CAM (Content Addressable Memory) - Knows what information is stored in each cell.
DDR - Double Data Rate - Data is read and written on both the rising and falling edges of the input clock.
DOUBLE LATE WRITE - Data in is captured on the second clock after address capture.
DUAL PORT - Single static SRAM array accessed by 2 sets of address, and control signals. (shared memory)
EARLY WRITE - Data is captured at the same time the write address is captured.
FIFO - First-In/First-Out, used as a data buffer between 2 interfaces and allows speed synchronisation.
FLOW-THROUGH - Synchronous SRAM with input register but no output register.
LATE WRITE - Data in is captured by the clock after address capture.
LEVEL 1 (L1) CACHE - Designed to supply the processor with the most requested data and instructions.
MoBL - More Battery Life, Draw up to 90% less power than standard low-power SRAM's. (Cypress)
NBT - (No Bus Turn around) Eliminates idle cycles between read and write on a common I/O bus.
NoBL - (No Bus Latency) Cypress (Same as GSI Technology's NBT - See above).
NtRAM - (No turnaround RAM) Toshiba, Samsung (Same as GSI Technology's NBT - See above).
PIPELINED - Synchronous SRAM with input and output registers.
QBT – Quick Bus Turnaround – (Same as GSI Technology's NBT - See above).
QDR - (Quad Data Rate) 2 ports that independently run at DDR, which = 4 data items per clock cycle**.**
SDR - Single Data Rate (e.g. Burst RAMs and NBT SRAMs)
SIGMA RAM - SRAM devices consist of different versions of the same part (FT,PL,DDR) in the same package.
SRAM (Static Random Access Memory) - Retain information as long as power is applied.(Look-up Tables)
SYNCBURST - Synchronous SRAM, used in secondary cache designs.
ZBT - (Zero Bus Turnaround) Cypress, IDT, Micron (Same as NBT – See NBT above).

SRAM low power part numbering guide – Cypress

CY6xxxx L – 55 xxx

Speed

L = Low Power
LL = Super Low Power

V = 2.7- 3.6 V
V25 = 2.3- 2.7 V
V18 = 1.6 - 2.0 V

Package
SNC = 300 mil SOIC
PC = 600 mil PDIP
Z = TSOP
ZR = Reverse TSOP
SC = 450 mil SOIC
ZA = STSOP- Small Thin Small Outline Pkg.
BA = FBGA (Fine Pitch Ball Grid Array)

SRAM low power part numbering guide - Hitachi

HM6XXXXX C LP I- 8 SL

Version
A= 1st Generation
B = 2nd
C = 3rd

Package
LP = 600 mil Low Power Plastic DIP
LFP = Small Outline
LT = TSOP
LTT = TSOP 11

I = Ind Temp
Blank = Commercial

Speed

L = Low Power
SL = Super Low Power

SRAM low power part numbering guide - ST

M	68	A	R	128	-55	N_	6	T	

ST Memory

LPSRAM Product Types
68 = Std. Industries

Code	Array organisation	Code	Array organisation
128	128K x16 2Mb	511	512K x8 4Mb
256	256K x16 4Mb	512	512K x16 8Mb

Functions
A = Asynchronous
F = Fast synchronous
P = Synch. Pipelined

Speed class
-70 = 70ns
-55 = 55ns
-15 = 15ns
-05 = 5ns

Package
N_ = TSOP…
Z_ = TFBGA…

Operating voltage
R = 1.65 to 1.95V
W = 2.7 to 3.6 V
F = 4.5 to 5.5 V

Options
T = Tape & Reel Packing
blank = In Tray

Operating Temperature
6 = - 40 to 85 °C
1 = 0 to 70 °C

SRAM low power product guide

Standard SRAM 55ns or slower					
Density	Configuration	volt	supplier	device	package
16K	2K x 8	5V	IDT	6116	P-DIP, SOIC, SOJ, CERDIP
	16K x 1	5V	IDT	6167	P-DIP , CERDIP
64K	8K x 8	5V	Cypress	CY6264	SOIC, SNC
			IDT	7164	P-DIP, SOJ, CERDIP, CLCC
	64K x 1	5V	IDT	7187	CERDIP
256K	32K x 8	2.7V-3.6V	Cypress	CY62256V	SNC, TSOP, RTSOP
		5V	Cypress	CY62256	P-DIP, SNC, TSOP, RTSOP
			IDT	71256	P-DIP, SOJ, CERDIP, CLCC
1M	64K x 16	2.7V - 3.6V	Cypress	CY62126BV	TSOPII, FBGA
				CY62127BV	TSOPII, FBGA
		3V	STM	M68AW064FL	TFBGA
	128K x 8	2.7V - 3.6V	Cypress	CY62128V	SOIC, STSOP, TSOP;RTSOP
		5V	Cypress	CY62128B	SOIC, STSOP, TSOP, RTSOP
			STM	M68AF127BL	SO32
2M	128K x 16	1.8V	STM	M68AR128ML	TFBGA
		2.7V - 3.6V	Cypress	CY62136V	FBGA, TSOPII
				CY62137V	FBGA, TSOPII
		3V	STM	M68AW128ML	TFBGA, TSOP
	256K x 8	2.7V - 3.6V	Cypress	CY62138V	FBGA
3M	n/a				

SRAM low power product guide

Standard SRAM 55ns or slower					
Density	Configuration	volt	supplier	device	package
4M	256K x 16	1.8V	STM	M68AR256ML	TFBGA
		2.7V - 3.6V	Cypress	CY62143BV	FBGA
				CY62146V	FBGA, TSOPII
				CY62147V	FBGA, TSOPII
		3V	STM	M68AW256ML	TFBGA, TSOPII
	512K x 8	2.7V - 3.6V	Hitachi	HM62V8512	SOP, TSOP
		3V	STM	M68AW511AL	TSOPII
		3.3V	Hitachi	HM62W8512	SOP, TSOP
		4.5V - 5.5V	Cypress	CY62148B	SOIC, TSOPII
		5V	Hitachi	HM628512	DIP, SOP, TSOP, P-DIP
			STM	M68AF511AL	TSOPII, SO32
8M	512K x 16	2.7V-3.6V	Hitachi	HM62V16512LBPI/LBPI-x	CSP
				HM62V16514LTTI/LTTI-xx	TSOP
		3V	STM	M68AW512DL	TFBGA
	1M x8	2.7V-3.6V	Hitachi	HM62V8100LTTI/LTTI-xx	TSOP

SRAM Fast part numbering guide - Cypress

CY 7C 1021 C V33 L – 12 BA C

CYPRESS

Technology
C = CMOS
B = BiCMOS

DEVICE

Die Revision

VOLTAGE
5V = none
3.3V = V
2.5V = V25

POWER
Standard = none
Low-Power = L
Super-Low Power = LL

SPEED on ns

Package
BA = FPBGA
BB = FBGA
BG = BGA
D = CERDIP
L = LCC
P = P-DIP
V = SOJ
Y = CLCC
Z = TSOP
ZS = TSOPII

Temp. Range
C = Commercial
I = Industrial

SRAM Fast part numbering guide - IDT

71 V 256 S A 12 Y I

Temp. Range
C = Commercial
I = Industrial

61 = SRAM
71 = New generation SRAM

Package
D = CERDIP
G = PBGA
L = CLCC
P = P-DIP
PF = PQFP
PZ = TSOP
SO = SOIC
Y = SOJ

SPEED on ns

VOLTAGE
none = 5V
V = 3.3V
T = 2.5V

DEVICE

Die revision

POWER
S = Standard
L = Low-Power

SRAM Fast part numbering guide - Hitachi

HM62 W 16255 HLTT 12 I

Hitachi SRAM

Supply Voltage

None = 5V

W = 3.3V

Density

256K x 16

512K x 8

1M x 4

4M x 4

Package

SOJ (36) = HCJP/HCLJP

SOJ (32) = HJP/HLJP

TSOP (44) = HTT/HLTT

SPEED on ns

Temp. Range

None = Commercial

I = Industrial

SRAM Fast Product guide

FastSRAM faster than 55ns					
Density	Configuration	volt	supplier	device	package
16k	2K x 8	5V	Cypress	CY6116A	P-DIP, CERDIP, LCC
				CY7C128A	P-DIP, CERDIP, SOIC, SOI
			IDT	6116	P-DIP, SOIC, SOJ, CERDIP,
	4K x 4	5V	Cypress	CY7C168A	P-DIP
			IDT	6168	P-DIP , CERDIP, CLCC
	16K x 1	5V	Cypress	CY7C167A	P-DIP, SOJ
			IDT	6167	P-DIP, CERDIP
64K	8K x 8	5V	Cypress	CY7C185	P-DIP, SOJ, SOIC, CERDIP
				CY7C186	P-DIP
			IDT	7164	P-DIP, SOJ, CERDIP, CLCC
	8K x 9	5V	Cypress	CY7C182	P-DIP, SOJ
	16K x 4	5V	Cypress	CY7C164	P-DIP
				CY7C166	P-DIP, SOJ
			IDT	7188	CERDIP
	64K x 1	5V	Cypress	CY7C187	P-DIP, SOJ
			IDT	7187	CERDIP

SRAM Fast Product guide

FastSRAM faster than 55ns					
Density	Configuration	volt	supplier	device	package
256K	32K x 8	3.3V	Cypress	CY7C1399	SOJ, TSOP
			IDT	71V256	SOJ, TSOP, PQFP
		5V	Cypress	CY7C198	LCC
				CY7C199	SOJ, TSOP, P-DIP, CERDIP, LCC
			IDT	71256	SOJ, TSOP, P-DIP, CERDIP, CLCC, PQFP
	32K x 9	5V	Cypress	CY7C188	SOJ
	64K x4	5V	Cypress	CY7C192	SOJ
				CY7C194	P-DIP, SOJ
				CY7C195	SOJ
			IDT	61298	SOJ
	256K x 1	5V	Cypress	CY7C197	P-DIP, SOJ

SRAM Fast Product guide

FastSRAM faster than 55ns					
Density	Configuration	volt	supplier	device	package
512K	32K x 16	3.3V	Cypress	CY7C1020V33	TSOPII
		5V	Cypress	CY7C1020	SOJ, TSOPII
1M	64K x 16	3.3V	Cypress	CY7C1021BV33	FBGA, SOJ, TSOPII
			IDT	71V016	SOJ, TSOP, PBGA, PQFP
		5V	Cypress	CY7C1021B	SOJ, TSOPII
			IDT	71016	SOJ, TSOP, PQFP
	128K x 8	3.3V	Cypress	CY7C1018BV33	SOJ
				CY7C1019BV33	SOJ
			IDT	71V124	SOJ, TSOP, PQFP
		5V	Cypress	CY7C1009B	SOJ
				CY7C1019B	SOJ, TSOPII
				CY7C109B	SOJ, TSOP
			IDT	71024	SOJ
				71124	SOJ
	256K x 4	5V	Cypress	CY7C1006B	SOJ
				CY7C106B	SOJ
			IDT	71028	SOJ
				71128	SOJ
	1M x1	5V	Cypress	CY7C1007B	SOJ
				CY7C107B	SOJ

SRAM Fast Product guide

FastSRAM faster than 55ns					
Density	Configuration	volt	supplier	device	package
2M	n/a				
3M	n/a				
4M	256K x 16	3.3V	Cypress	CY7C1041BV33	SOJ, TSOPII
			IDT	71V416	SOJ, PBGZ
			Hitachi	HM62W16255	SOJ , TSOP
		5V	Cypress	CY7C1041B	SOJ, TSOPII
		5V	Hitachi	HM6216255	SOJ , TSOP
	512K x 8	3.3V	Cypress	CY7C1049BV33	SOJ, TSOPII
			IDT	71V424	SOJ
			Hitachi	HM62W8511	SOJ
		5V	Cypress	CY7C1049B	SOJ
			Hitachi	HM628511	SOJ
	1M x 4	3.3V	Cypress	CY7C1046BV33	SOJ
			IDT	71V428	SOJ
			Hitachi	HM62W4100	SOJ
		5V	Cypress	CY7C1046B	SOJ
			Hitachi	HM624100	SOJ
	4M x 1	3.3V	Hitachi	HM62W1400	SOJ

SRAM Synchronous part numbering guide - IDT 4Mb

71V 2 5 7 61 S 1 66 PF I 8

SRAM Type
7 = PSRAM
5 = ZBT
4 = ZBT with improved Tcdc

I/O Voltage
3 = 3.3V
2 = 2.5V

Product
71 = SRAM

Core Voltage
V= 3.3V
T = 2.5V

Density
5 = 4Mb

Speed Range
Flowthrough -- always blank

Pipeline
blank = 133MHz - 166MHz
1 = 166MHz - 200MHz

Temperature Range
I = Industrial
Blank = Commercial

Shipping Code
8 = Tape & Reel
9 = Blister Pack

Package Type
PF = 100-TQFP
BG = 119-BGA

Speed
Pipelined = MHz
Flow Through = 10 x tCD ns

Power Designator
S = Standard Power

SRAM Synchronous part numbering guide - IDT 9 & 18Mb

71 V 6 5 7 0 3 S 133 PF I 8

Width / Mode
2 = x32 Pipelined Burst
3 = x32 Flow Through
6 = x36 Pipelined Burst
7 = x36 Flow Through
8 = x18 Pipelined Burst
9 = x18 Flow Through

Density
6 = 8Mb
7 = 16Mb

Product
71 = SRAM

Core Voltage
V = 3.3V
T = 2.5V

SRAM Type
5 = ZBT
7 = PB SRAM Single Cycle Deselect
8 = PB SRAM Double Cycle Deselect

Speed Range
0 = 100MHz - 166MHz
1 = 183MHz - 200MHz

I/O Voltage
3 = 3.3V
2 = 2.5V
1 = 1.8V

Temperature Range
I = Industrial
Blank = Commercial

Shipping Code
8 = Tape & Reel
9 = Blister Pack

Package Type
PF = 100-TQFP
BG = 119-BGA
BQ = 165-fBGA

Speed
Pipelined = MHz
Flow Through = 10 x tCD ns

Power Designator
S = Standard Power

SRAM Synchronous part numbering guide - Micron

MT 58 L 128 L 36 P x T - 5 ES

Micron Technology

Product Family
54 = QDR
55 = ZBT
57 = DDR
58 = SyncBurst

Core Voltage
L = 3.3V
V = 2.5V

Device Depth

I/O Voltage
H = HSTL
L = LVTTL or 3.3V
V = 2.5V
Y = 2.5V/3.3V

Device Width

Device Version
F = Flow-Through
P = Pipelined – SCD
D = Pipelined – DCD
A = Pipelined – Burst of 2
E = Pipelined – Burst of 4

Revision
Optional name
1, 2, 3. . .

Package Code
T = TQFP (8Mb "T" package = 2-chip enable; all others are 3-chip)
S = TQFP (3-chip enable, 8Mb only)
F = FBGA

Speed Grade

Processing Code
Blank = Standard Production Part
ES = Engineering Sample
MS = Mechanical Sample
TR = Tape-and-Reel
IT = Industrial Temp.

SRAM Synchronous part numbering guide - Cypress

CY 7C 1387 B V25 – 167 A C

CYPRESS

Technology

C = CMOS

B = BiCMOS

DEVICE

Die Revision

VOLTAGE

5V = none

3.3V = V

2.5V = V25

SPEED

ns or MHz

Temp. Range

C = Commercial

I = Industrial

Package

A = TQFP

BG = BGA

J = PLCC

N = PQFP

SRAM Synchronous product guide

Density	Configuration	Voltage	Supplier	Architecture	Device	Package
1M	32K x 32	3.3V	IDT	Pipelined	71V432	TSSOP
				Flow Through	71V433	TSSOP
			MIC	Pipelined	MT58L32L32D	TQFP
					MT58L32L32P	TQFP
				Flow Through	MT58L32L32F	TQFP
	32k x 36	3.3V	MIC	Pipelined	MT58L32L36D	TQFP
					MT58L32L36P	TQFP
				Flow Through	MT58L32L36F	TQFP
	64k x 18	3.3V	MIC	Pipelined	MT58L64L18D	TQFP
					MT58L64L18P	TQFP
				Flow Through	MT58L64L18F	TQFP
		3.3V-5V	CYP	Flow Through	CY7C103	PQFP, PLCC
2M	64K x 32	2.5V	MIC	Pipelined	MT58L64V32D	TQFP
					MT58L64V32P	TQFP
				Flow Through	MT58L64V32F	TQFP
		3.3V	CYP	Pipelined	CY7C1329	TQFP
			IDT	Pipelined	71V632	TSSOP
				Flow Through	71V633	TSSOP
			MIC	Pipelined	MT58L64L32D	TQFP
					MT58L64L32P	TQFP
				Flow Through	MT58L64L32F	TQFP
	64K x 36	2.5V	MIC	Pipelined	MT58L64V36D	TQFP
					MT58L64V36P	TQFP
				Flow Through	MT58L64V36F	TQFP

SRAM Synchronous product guide

SynBurstSRAM						
Density	Configuration	Voltage	Supplier	Architecture	Device	Package
2M	128K x 18	2.5V	MIC	Pipelined	MT58L128V18	TQFP
					MT58L128V18	TQFP
				Flow Through	MT58L128V18	TQFP
		3.3V	CYP	Flow Through	CY7C1324	TQFP
			MIC	Pipelined	MT58L128L18	TQFP
					MT58L128L18	TQFP
				Flow Through	MT58L128L18	TQFP
4M	128K x 32	2.5V	MIC	Pipelined	MT58L128V32	TQFP, FBGA
					MT58L128V32	TQFP, FBGA
				Flow Through	MT58L128V32	TQFP, FBGA
		2.5V-3.3V	CYP	Pipelined	CY7C1339B	TQFP, BGA
				Flow Through	CY7C1338B	TQFP, BGA
		3.3V	CYP	Pipelined	CY7C1340	TQFP, BGA
			MIC	Pipelined	MT58L128L32	TQFP, FBGA
					MT58L128L32	TQFP, FBGA
				Flow Through	MT58L128L32	TQFP, FBGA
	128K x 36	2.5V	CYP	Pipelined	CY7C1348	TQFP, BGA
			MIC	Pipelined	MT58L128V36	TQFP, FBGA
					MT58L128V36	TQFP, FBGA
				Flow Through	MT58L128V36	TQFP, FBGA
		2.5V-3.3V	CYP	Pipelined	CY7C1347	TQFP, BGA
				Flow Through	CY7C1345B	TQFP, BGA
		3.3V	IDT	Pipelined	71V2576	PBGA, TSSOP
					71V3576	PBGA, TSSOP
				Flow Through	71V2577	PBGA, TSSOP
					71V3577	PBGA, TSSOP
			MIC	Pipelined	MT58L128L36	TQFP, FBGA
					MT58L128L36	TQFP, FBGA
				Flow Through	MT58L128L36	TQFP, FBGA

SRAM Synchronous product guide

SynBurstSRAM						
Density	Configuration	Voltage	Supplier	Architecture	Device	Package
4M	256K x 18	2.5V	MIC	Pipelined	MT58L256V18D	TQFP, FBGA
					MT58L256V18P	TQFP, FBGA
				Flow Through	MT58L256V18F	TQFP, FBGA
		2.5V-3.3V	CYP	Pipelined	CY7C1327B	TQFP, BGA
					CY7C1328	TQFP, BGA
				Flow Through	CY7C1325	TQFP, BGA
		3.3V	CYP	Pipelined	CY7C1327C	TQFP, BGA
			IDT	Pipelined	71V2578	PBGA, TSSOP
					71V3578	PBGA, TSSOP
				Flow Through	71V2579	PBGA, TSSOP
					71V3579	PBGA, TSSOP
			MIC	Pipelined	MT58L256L18D	TQFP, FBGA
					MT58L256L18P	TQFP, FBGA
				Flow Through	MT58L256L18F	TQFP, FBGA
8M	256K x 32	2.5V	CYP	Pipelined	CY7C1364V25	TQFP, BGA
				Flow Through	CY7C1365V25	TQFP, BGA
			MIC	Pipelined	MT58L256V32D	TQFP, FBGA
			MIC		MT58L256V32P	TQFP, FBGA
			MIC	Flow Through	MT58L256V32F	TQFP, FBGA
		3.3V	MIC	Pipelined	MT58L256L32D	TQFP, FBGA
			MIC	Pipelined	MT58L256L32P	TQFP, FBGA
			MIC	Flow Through	MT58L256L32F	TQFP, FBGA

SRAM Synchronous product guide

SynBurstSRAM						
Density	Configuration	Voltage	Supplier	Architecture	Device	Package
9M	256K x 36	2.5V	CYP	Pipelined	CY7C1360V25	TQFP, BGA
				Flow Through	CY7C1361V25	TQFP, BGA
			IDT	Pipelined	71T676	PBGA, TSSOP
				Flow Through	71T677	PBGA, TSSOP
			MIC	Pipelined	MT58L256V36D	TQFP, FBGA
					MT58L256V36P	TQFP, FBGA
				Flow Through	MT58L256V36F	TQFP, FBGA
		2.5V-3.3V	CYP	Pipelined	CY7C1360A	TQFP, BGA
				Pipelined	CY7C1366A	TQFP, BGA
				Flow Through	CY7C1361A	TQFP, BGA
		3.3V	IDT	Pipelined	71V676	PBGA, TSSOP
				Flow Through	71V677	PBGA, TSSOP
			MIC	Pipelined	MT58L256L36D	TQFP, FBGA
					MT58L256L36P	TQFP, FBGA
				Flow Through	MT58L256L36F	TQFP, FBGA
	512K x 18	2.5V	CYP	Pipelined	CY7C1362V25	TQFP, BGA
				Flow Through	CY7C1363V25	TQFP, BGA
			MIC	Pipelined	MT58L512V18D	TQFP, FBGA
					MT58L512V18P	TQFP, FBGA
				Flow Through	MT58L512V18F	TQFP, FBGA
		2.5V-3.3V	CYP	Pipelined	CY7C1362A	TQFP, BGA
					CY7C1367A	TQFP, BGA
				Flow Through	CY7C1363A	TQFP, BGA
		3.3V	IDT	Pipelined	71V678	PBGA, TSSOP
				Flow Through	71V679	PBGA, TSSOP
			MIC	Pipelined	MT58L512L18D	TQFP, FBGA
					MT58L512L18P	TQFP, FBGA
				Flow Through	MT58L512L18F	TQFP, FBGA

SRAM Synchronous product guide

SynBurstSRAM						
Density	Configuration	Voltage	Supplier	Architecture	Device	Package
18M	512Kx 32	2.5V-3.3V	MIC	Pipelined	MT58L512Y32D	TQFP, FBGA
					MT58L512Y32P	TQFP, FBGA
				Flow Through	MT58L512Y32F	TQFP, FBGA
	512Kx 36	2.5V	CYP	Pipelined	CY7C1386BV25	TQFP, BGA
					CY7V1380BV25	TQFP, BGA
				Flow Through	CY7C1381BV25	TQFP, BGA
		2.5V-3.3V	CYP	Pipelined	CY7C1386B	TQFP, BGA
					CY7V1380B	TQFP, BGA
				Flow Through	CY7C1381B	TQFP, BGA
			MIC	Pipelined	MT58L512Y36D	TQFP, FBGA
					MT58L512Y36P	TQFP, FBGA
				Flow Through	MT58L512Y36F	TQFP, FBGA
	1M x 18	2.5V	CYP	Pipelined	CY7C1387BV25	TQFP, BGA
					CY7C1382BV25	TQFP, BGA
				Flow Through	CY7C1383BV25	TQFP, BGA
		2.5V-3.3V	CYP	Pipelined	CY7C1387B	TQFP, BGA
					CY7C1382B	TQFP, BGA
				Flow Through	CY7C1383B	TQFP, BGA
			MIC	Pipelined	MT58L1MY18D	TQFP, FBGA
					MT58L1MY18P	TQFP, FBGA
				Flow Through	MT58L1MY18F	TQFP, FBGA

SRAM Synchronous product guide

ZBT SRAM						
Density	Configuration	Voltage	Supplier	Architecture	Device	Package
2M	64K x 32	3.3V	CYP	Pipelined	CY7C1334	TQFP
				Flow Through	CY7C1333	TQFP
			MIC	Pipelined	MT55L64L32P	TQFP
				Flow Through	MT55L64L32F	TQFP
	64K x 36	3.3V	MIC	Pipelined	MT55L64L36P	TQFP
				Flow Through	MT55L64L36F	TQFP
	128K x 18	3.3V	MIC	Pipelined	MT55L128L18P	TQFP
				Flow Through	MT55L128L18F	TQFP
4M	128K x 32	2.5V	MIC	Pipelined	MT55L128V32P	TQFP, FBGA
				Flow Through	MT55L128V32F	TQFP, FBGA
	128K x 36	3.3V	CYP	Pipelined	CY7C1350B	TQFP, BGA
				Flow Through	CY7C1351B	TQFP, BGA
			IDT	Pipelined	71V2546	TSSOP, PBGA
					71V2556	TSSOP, PBGA
					71V3556	TSSOP, PBGA
					71V546	TSSOP
				Flow Through	71V2557	TSSOP, PBGA
					71V3557	TSSOP, PBGA
					71V547	TSSOP
			MIC	Pipelined	MT55L128L36P	TQFP, FBGA
				Flow Through	MT55L128L36F	TQFP, FBGA

SRAM Synchronous product guide

ZBT SRAM						
Density	Configuration	Voltage	Supplier	Architecture	Device	Package
4M	256K x 18	2.5V	MIC	Pipelined	MT55L256V18P	TQFP, FBGA
				Flow Through	MT55L256V18F	TQFP, FBGA
		3.3V	CYP	Pipelined	CY7C1352B	TQFP, BGA
				Flow Through	CY7C1353B	TQFP, BGA
			IDT	Pipelined	71V2548	TSSOP, PBGA
					71V2558	TSSOP, PBGA
					71V3548	TSSOP, PBGA
					71V3558	TSSOP, PBGA
				Flow Through	71V2559	TSSOP, PBGA
					71V3559	TSSOP, PBGA
			MIC	Pipelined	MT55L256L18P	TQFP, FBGA
				Flow Through	MT55L256L18F	TQFP, FBGA
8M	256K x 32	2.5V	MIC	Pipelined	MT55L256V32P	TQFP, FBGA
				Flow Through	MT55L256V32F	TQFP, FBGA
		3.3V	MIC	Pipelined	MT55L256L32P	TQFP, FBGA
				Flow Through	MT55L256L32F	TQFP, FBGA

SRAM Synchronous product guide

ZBT SRAM						
Density	Configuration	Voltage	Supplier	Architecture	Device	Package
9M	256K x 36	2.5V	CYP	Pipelined	CY7C1354V25	TQFP, BGA
				Flow Through	CY7C1355V25	TQFP, BGA
			IDT	Pipelined	71T65602	TSSOP, PBGA
					71T65612	TSSOP, PBGA
				Flow Through	71T65702	TSSOP, PBGA
			MIC	Pipelined	MT55L256V36P	TSSOP, PBGA
				Flow Through	MT55L256V36F	TSSOP, PBGA
		2.5V-3.3V	CYP	Pipelined	CY7C1354A	TQFP, BGA
				Flow Through	CY7C1355A	TQFP, BGA
		3.3V	IDT	Pipelined	71V65602	TSSOP, PBGA
					71V65603	TSSOP, PBGA
					71V65612	TSSOP, PBGA
					71V65613	TSSOP, PBGA
				Flow Through	71V65702	TSSOP, PBGA
					71V65703	TSSOP, PBGA
			MIC	Pipelined	MT55L256L36P	TSSOP, PBGA
				Flow Through	MT55L256L36F	TSSOP, PBGA

SRAM Synchronous product guide

ZBT SRAM						
Density	Configuration	Voltage	Supplier	Architecture	Device	Package
	512K x 18	2.5V	CYP	Pipelined	CY7C1356V25	TQFP, BGA
				Flow Through	CY7C1357V25	TQFP, BGA
			IDT	Pipelined	71T65802	TSSOP, PBGA
					71T657812	TSSOP, PBGA
				Flow Through	71T65902	TSSOP, PBGA
			MIC	Pipelined	MT55L512V18P	TSSOP, PBGA
				Flow Through	MT55L512V18F	TSSOP, PBGA
		2.5V-3.3V	CYP	Pipelined	CY7C1356A	TQFP, BGA
				Flow Through	CY7C1357A	TQFP, BGA
		3.3V	IDT	Pipelined	71V65802	TSSOP, PBGA
					71V65803	TSSOP, PBGA
					71V65812	TSSOP, PBGA
					71V65813	TSSOP, PBGA
				Flow Through	71V65702	TSSOP, PBGA
					71V65703	TSSOP, PBGA
			MIC	Pipelined	MT55L256L36P	TSSOP, PBGA
				Flow Through	MT55L256L36F	TSSOP, PBGA

SRAM Synchronous product guide

ZBT SRAM						
Density	Configuration	Voltage	Supplier	Architecture	Device	Package
18M	512K x 32	2.5V-3.3V	MIC	Pipelined	MT55L512Y32P	TSSOP, PBGA
				Flow Through	MT55L512Y32F	TSSOP, PBGA
	512K x 36	2.5V	CYP	Pipelined	CY7C1370BV25	TQFP, BGA
				Flow Through	CY7C1371BV25	TQFP, BGA
			IDT	Pipelined	71T75602	TSSOP, PBGA
					71T75612	TSSOP, PBGA
				Flow Through	71T75702	TSSOP, PBGA
		2.5V-3.3V	CYP	Pipelined	CY7C1370B	TQFP, BGA
				Flow Through	CY7C1371B	TQFP, BGA
			MIC	Pipelined	MT55L512Y36P	TSSOP, PBGA
				Flow Through	MT55L512Y36F	TSSOP, PBGA
	1M x 18	2.5V	CYP	Pipelined	CY7C1372BV25	TQFP, BGA
				Flow Through	CY7C1373BV25	TQFP, BGA
			IDT	Pipelined	71T75802	TSSOP, PBGA
					71T75812	TSSOP, PBGA
				Flow Through	71T5902	TSSOP, PBGA
		2.5V-3.3V	CYP	Pipelined	CY7C1372B	TQFP, BGA
				Flow Through	CY7C1373B	TQFP, BGA
			MIC	Pipelined	MT55L1MY18P	TSSOP, PBGA
				Flow Through	MT55L1MY18F	TSSOP, PBGA

SRAM Synchronous product guide

QDR SRAM						
Density	Configuration	Voltage	Supplier	Architecture	Device	Package
9M	512K x 18	1.8V	CYP	2-word Burst	CY7C1302V25	FBGA
				4-word Burst	CY7C1304V25	FBGA
			MIC	2-word Burst	MT54V512H18A	FBGA
				4-word Burst	MT54V512H18E	FBGA
18M	512K x 36	1.8V	MIC	2-word Burst	MT54V512H36A	FBGA
				4-word Burst	MT54V512H36E	FBGA
	1M x 18	1.8V	MIC	2-word Burst	MT54V1MH18A	FBGA
				4-word Burst	MT54V1MH18E	FBGA

QDR II SRAM						
Density	Configuration	Voltage	Supplier	Architecture	Device	Package
18M	512K x 36	1.8V	MIC	2-word Burst	MT54W512H36B	FBGA
				4-word Burst	MT54W512H36J	FBGA
	1M x 18	1.8V	MIC	2-word Burst	MT54W1MH18B	FBGA
				4-word Burst	MT54W1MH18J	FBGA
	2M x 8	1.8V	MIC	2-word Burst	MT54W2MH18B	FBGA
				4-word Burst	MT54W2MH18J	FBGA

SRAM Synchronous product guide

DDR SRAM						
Density	Configuration	Voltage	Supplier	Architecture	Device	Package
9M	256K x 36	1.8V	MIC	Pipelined	MT57V256H36P	FBGA
18M	512K x 36	1.8V	MIC	2-word Burst	MT57V512H36A	FBGA
				4-word Burst	MT57V512H36E	FBGA
	1M x 18	1.8V	MIC	2-word Burst	MT57V1MH18A	FBGA
				4-word Burst	MT57V1MH18E	FBGA

DDR II SRAM						
Density	Configuration	Voltage	Supplier	Architecture	Device	Package
18M	512K x 36	1.8V	MIC	2-word Burst	MT57W512H36B	FBGA
				4-word Burst	MT57W512H36J	FBGA
	1M x 18	1.8V	MIC	2-word Burst	MT57W1MH18B	FBGA
				4-word Burst	MT57W1MH18J	FBGA
	2M x 8	1.8V	MIC	2-word Burst	MT57W2MH8B	FBGA
				4-word Burst	MT57W2MH8J	FBGA

EPROM part numbering guide - ST

M27 X XXX - XX XX X

Memory
M27 = EPROM

Voltage
C = 5V
W = 2.7V - 3.6V

Density
256 = **256Kb** (x8)
512 = **512Kb** (x8)
516 = **512Kb** (x16)
1001 = **1Mb** (x8)
1024 = **1Mb** (x16)
2001 = **2Mb** (x8)
202 = **2Mb** (x16)
4001 = **4Mb** (x8)
4002 = **4Mb** (x16)
400 = **4Mb** (x8/x16)
801 = **8Mb** (x8)
800 = **8Mb** (x8/x16)
160 = **16Mb** (x8/x16)
322 = **32Mb**,(x16)
320 = **32Mb** (x8/x16)
642 = **64Mb** (x16)
640 = **64Mb** (x8/x16)

Speed
25 = 25 ns
35 = 35 ns
45 = 45 ns
55 = 55 ns
70 = 70 ns
80 = 80 ns
85 = 85 ns
90 = 90 ns
10 = 100 ns
12 = 120 ns
15 = 150 ns

Packages
B = PDIP
F = FDIPW
C = PLCC
N = TSOP
K = PLCC
M = SO

Temperature
1 = 0 to 70 ºC
3 = -40 to 125 ºC
6 = -40 to 85 ºC

EPROM Product guide

Density	Supplier	Organisation	Supply voltage	Device Number	Packages
64K	ST	8K x 8	5v	M27C64	CDIP
256K	ST	32K x 8	5v	M27C256B	PLCC, CDIP, PDIP
512K	ST	64K x 8	5v	M27C512	PLCC, CDIP, PDIP
512K	ST	64K x 8	3v or 3.3v	M27W512	PLCC, TSOP
1Mb	ST	128K x 8	5v	M27C1001	PLCC, CDIP, PDIP
1Mb	ST	128K x 8	3v or 3.3v	M27W101	PLCC, TSOP
1Mb	ST	128K x 8	3.3v	M27V101	TSOP
1Mb	ST	64K x 16	3v or 3.3v	M27W102	PLCC, TSOP
1Mb	ST	64K x 16	5v	M27C1024	PLCC, CDIP
2Mb	ST	256K x 8	5v	M27C2001	PLCC, CDIP, PDIP
2Mb	ST	256K x 8	3v or 3.3v	M27W201	PLCC, TSOP
4Mb	ST	512K x 8	5v	M27C4001	PLCC, CDIP, PDIP
4Mb	ST	512K x 8	3v or 3.3v	M27W401	PLCC
4Mb	ST	256K x 16	5v	M27C4002	PLCC, CDIP
8Mb	ST	1M x 8	5v	M27C801	CDIP, PDIP, PLCC
8Mb	ST	1M x 8/512K x 16	5v	M27C800	PLCC, CDIP
16Mb	ST	2M x 8/1M x 16	5v	M27C160	PLCC, CDIP

EEPROM Serial part numbering guide - ST

MXX XXX - X XX X X

Standard Memory
M93 = Microwire
M24 = I²C
M95 = SPI
M25 = Serial Flash
ASM
M33 = Microwire
M34 = I²C
M35 = SPI

Denisty
C01 = 1 Kbit I²C
C02 = 2 Kbit
C04 = 4 Kbit
C08 = 8 Kbit
C16 = 16 Kbit
C32 = 32 Kbit
128 = 128 Kbit
256 = 256 Kbit
512 = 512 Kbit

Voltage
"blank" = 4.5V to 5.5V
W = 2.5V to 5.5V
R = 1.8V to 5.5V 100KHz
S = 1.8v to 3.6V 400KHz
V = 2.7V to 3.6V 5MHz

Package
BN = PSDIP8
DL = TSSOP14
DW = TSSOP8 wide
EA = SBGA
LA = LGA
MN = SO8, 150 mm
MW = SO8, 200 mm
ML = SO14
PA = SOT23.3
PB = SOT 23.5

Temperature (°C)
3 = -40 to 125°C
6 = -40 to 85°C

Packing
T = tape&reel

EEPROM Serial product guide I²C Bus

Density	Supplier	Ref	Description	Packages
1Kb	ST	M24C01	1Kb (x8), 4.5-5.5V, 400kHz, 5ms Write time	PDIP8, SO8, TSSOP8
	ST	M24C01-W	1Kb (x8), 2.5-5.5V, 400kHz, 10ms Write time	PDIP8, SO8, TSSOP8
	ST	M24C01-R	1Kb (x8), 1.8-5.5V, 100kHz, 10ms Write time	PDIP8, SO8, TSSOP8
2Kb	ST	M24C02	2Kb (x8), 4.5-5.5V, 400kHz, 5ms Write time	PDIP8, SO8, TSSOP8
	ST	M24C02-W	2Kb (x8), 2.5-5.5V, 400kHz, 10ms Write time	PDIP8, SO8, TSSOP8
	ST	M24C02-R	2Kb (x8), 1.8-5.5V, 100kHz, 10ms Write time	PDIP8, SO8, TSSOP8
4Kb	ST	M24C04	4Kb (x8), 4.5-5.5V, 400kHz, 5ms Write time	PDIP8, SO8, TSSOP8
	ST	M24C04-W	4Kb (x8), 2.5-5.5V, 400kHz, 10ms Write time	PDIP8, SO8, TSSOP8
	ST	M24C04-R	4Kb (x8), 1.8-5.5V, 100kHz, 10ms Write time	PDIP8, SO8, TSSOP8
8Kb	ST	M24C08	8Kb (x8), 4.5-5.5V, 400kHz, 5ms Write time	PDIP8, SO8, TSSOP8
	ST	M24C08-W	8Kb (x8), 2.5-5.5V, 400kHz, 10ms Write time	PDIP8, SO8, TSSOP8
	ST	M24C08-R	8Kb (x8), 1.8-5.5V, 100kHz, 10ms Write time	PDIP8, SO8, TSSOP8
16Kb	ST	M24C16	16Kb (x8), 4.5-5.5V, 400kHz, 5ms Write time	PDIP8, SO8, TSSOP8
	ST	M24C16-W	16Kb (x8), 2.5-5.5V, 400kHz, 10ms Write time	PDIP8, SO8, TSSOP8
	ST	M24C16-R	16Kb (x8), 1.8-5.5V, 100kHz, 10ms Write time	PDIP8, SO8, TSSOP8
	ST	M24C16-S	16Kb (x8), 1.8-3.6V, 400kHz, 10ms Write time	SBGA5
32Kb	ST	M24C32	32Kb (x8), 4.5-5.5V, 400kHz, 10ms Write time	PDIP8, SO8, SO8 Wide, TSSOP8
16Kb	ST	M24C32-R	32Kb (x8), 1.8-5.5V, 100kHz, 10ms Write time	SO8

EEPROM Serial product guide I²C Bus

Density	Supplier	Ref	Description	Packages
32Kb	ST	M24C32-S	32Kb (x8), 1.8-3.6V, 400kHz, 10ms Write time	PDIP8, SO8, SO8 Wide, TSSOP8
	ST	M24C32-W	32Kb (x8), 2.5-5.5V, 400kHz, 10ms Write time	PDIP8, SO8, SO8 Wide, TSSOP8
64Kb	ST	M24C64	64Kb (x8), 4.5-5.5V, 400kHz, 10ms Write time	PSDIP8, SO8, SO8 Wide, TSSOP8
	ST	M24C64-W	64Kb (x8), 2.5-5.5V, 400kHz, 10ms Write time	PSDIP8, SO8, SO8 Wide, TSSOP8
	ST	M24C64-S	64Kb (x8), 1.8-3.6V, 400kHz, 10ms Write time	PSDIP8, SO8, SO8 Wide, TSSOP8
	ST	M24C64-R	64Kb (x8), 1.8-5.5V, 400kHz, 10ms Write time	SO8, TSSOP8
128Kb	ST	M24128	128Kb (x8), 4.5-5.5V, 400kHz, 10ms Write time, no Chip Enable	PDIP8, SO8, TSSOP14
	ST	M24128-W	128Kb (x8), 2.5-5.5V, 400kHz, 10ms Write time, no Chip Enable	PDIP8, SO8, TSSOP14
	ST	M24128-B	128Kb (x8), 4.5-5.5V, 400kHz, 10ms Write time, 3 Chip Enables	PSDIP8, SO8, TSSOP14
	ST	M24128-BW	128Kb (x8), 2.5-5.5V, 400kHz, 10ms Write time, 3 Chip Enables	PDIP8, SO8, TSSOP14, TSSOP8
256Kb	ST	M24256	256Kb (x8), 4.5-5.5V, 400kHz, 10ms Write time, no Chip Enable	PDIP8, SO8 Wide
	ST	M24256-W	256Kb (x8), 2.5-5.5V, 400kHz, 10ms Write time, no Chip Enable	PDIP8, SO8 Wide
	ST	M24256-A	256Kb (x8), 4.5-5.5V, 400kHz, 10ms Write time, 2 Chip Enables	PDIP8, SO8, SO8 Wide, TSSOP14
	ST	M24256-AW	256Kb (x8), 2.5-5.5V, 400kHz, 10ms Write time, 2 Chip Enables	PDIP8, SO8, SO8 Wide, TSSOP14
	ST	M24256-B	256Kb (x8), 4.5-5.5V, 400kHz, 10ms Write time, 3 Chip Enables	SO8, S08 Wide, TSSOP8
	ST	M24256-BV	256Kb (x8), 2.7-3.6V, 400kHz, 10ms Write time, 3 Chip Enables	SO8, TSSOP8
	ST	M24256-BW	256Kb (x8), 2.5-5.5V, 400kHz, 10ms Write time, 3 Chip Enables	SBGA8, SO8 wide, TSSOP8
512Kb	ST	M24512	512Kb (x8), 4.5-5.5V, 400kHz, 10ms Write time, 3 Chip Enables	PDIP8, LGA8, SO8 Wide
	ST	M24512-W	512Kb (x8), 2.5-5.5V, 400kHz, 10ms Write time, 3 Chip Enables	PDIP8, LGA8, SO8 Wide
1Mb	ST	M24M01-V	1Mb, 2.7-3.6V, 400kHz, 10ms Write time, 3 Chip Enables	LGA8

EEPROM Serial product guide MICROWIRE Bus

Density	Supplier	Ref	Description	Packages
256b	ST	M93C06	256b (x8/x16), 4.5-5.5V, 1MHz, 10ms Write time	PDIP8, SO8
	ST	M93C06-W	256b (x8/x16), 2.5-5.5V, 1MHz, 10ms Write time	PDIP8, SO8
1Kb	ST	M93C46	1Kb (x8/x16), 4.5-5.5V, 1MHz, 10ms Write time	PDIP8, SO8
	ST	M93C46-W	1Kb (x8/x16), 2.5-5.5V, 1MHz, 10ms Write time	PDIP8, SO8, TSSOP8
	ST	M93S46	1Kb (x16), 4.5-5.5V, 1MHz, 10ms Write time, Block Write Protection	PDIP8, SO8
	ST	M93S46-W	1Kb (x16), 2.5-5.5V, 1MHz, 10ms Write time, Block Write Protection	PDIP8, SO8
2Kb	ST	M93C56	2Kb (x8/x16), 4.5-5.5V, 1MHz, 10ms Write time	PDIP8, SO8
	ST	M93C56-W	2Kb (x8/x16), 2.5-5.5V, 1MHz, 10ms Write time	PDIP8, SO8, TSSOP8
	ST	M93S56	2Kb (x16), 4.5-5.5V, 1MHz, 10ms Write time, Block Write Protection	PDIP8, SO8
	ST	M93S56-W	2Kb (x16), 2.5-5.5V, 1MHz, 10ms Write time, Block Write Protection	PDIP8, SO8
4Kb	ST	M93C66	4Kb (x8/x16), 4.5-5.5V, 1MHz, 10ms Write time	PDIP8, SO8
	ST	M93C66-W	4Kb (x8/x16), 2.5-5.5V, 1MHz, 10ms Write time	PDIP8, SO8, TSSOP8
	ST	M93S66	4Kb (x16), 4.5-5.5V, 1MHz, 10ms Write time, Block Write Protection	PDIP8, SO8
	ST	M93S66-W	4Kb (x16), 2.5-5.5V, 1MHz, 10ms Write time, Block Write Protection	PDIP8, SO8
8Kb	ST	M93C76	8Kb (x8/x16), 4.5-5.5V, 1MHz, 10ms Write time	PDIP8, SO8
	ST	M93C76-W	8Kb (x8/x16), 2.5-5.5V, 1MHz, 10ms Write time	PDIP8, SO8
16Kb	ST	M93C86	16Kb (x8/x16), 4.5-5.5V, 1MHz, 10ms Write time	PDIP8, SO8
	ST	M93C86-W	16Kb (x8/x16), 2.5-5.5V, 1MHz, 10ms Write time	PDIP8, SO8

EEPROM Serial product guide SPI Bus & High Speed Clock

Density	Supplier	Ref	Description	Packages
1Kb	ST	M95010	1Kb (x8), 4.5-5.5V, 5MHz, 10ms Write, Block Write Protection	PDIP8, SO8, TSSOP8
	ST	M95010-W	1Kb (x8), 2.5-5.5V, 2MHz, 10ms Write, Block Write Protection	PDIP8, SO8, TSSOP8
2Kb	ST	M95020	2Kb (x8), 4.5-5.5V, 5MHz, 10ms Write, Block Write Protection	PDIP8, SO8, TSSOP8
	ST	M95020-W	2Kb (x8), 2.5-5.5V, 2MHz, 10ms Write, Block Write Protection	PDIP8, SO8, TSSOP8
4Kb	ST	M95040	4Kb (x8), 4.5-5.5V, 5MHz, 10ms Write, Block Write Protection	PDIP8, SO8, TSSOP8
	ST	M95040-W	4Kb (x8), 2.5-5.5V, 2MHz, 10ms Write, Block Write Protection	PSDIP8, SO8, TSSOP8
8Kb	ST	M95080	8Kb (x8), 4.5-5.5V, 5MHz, 10ms Write, Block Write Protection	PDIP8, SO8, TSSOP8
	ST	M95080-W	8Kb (x8), 2.5-5.5V, 2MHz, 10ms Write, Block Write Protection	PDIP8, SO8, TSSOP8
16Kb	ST	M95160	16Kb (x8), 4.5-5.5V, 5MHz, 10ms Write, Block Write Protection	PDIP8, SO8
	ST	M95160-W	16Kb (x8), 2.5-5.5V, 2MHz, 10ms Write, Block Write Protection	PDIP8, SO8, TSSOP14, TSSOP8
32Kb	ST	M95320	32Kb (x8), 4.5-5.5V, 5MHz, 10ms Write, Block Write Protection	PDIP8, SO8
	ST	M95320-W	32Kb (x8), 2.5-5.5V, 2MHz, 10ms Write, Block Write Protection	PDIP8, SO8, TSSOP14
64Kb	ST	M95640	64Kb (x8), 4.5-5.5V, 5MHz, 10ms Write, Block Write Protection	PDIP8, SO8, TSSOP14
	ST	M95640-W	64Kb (x8), 2.5-5.5V, 2MHz, 10ms Write, Block Write Protection	PDIP8, SO8, TSSOP14
128Kb	ST	M95128	128Kb (x8), 4.5-5.5V, 5MHz, 10ms Write, Block Write Protection	PDIP8, SO8, TSSOP14
	ST	M95128-W	128Kb (x8), 2.5-5.5V, 2MHz, 10ms Write, Block Write Protection	PDIP8, SO8, TSSOP14
256Kb	ST	M95256	256Kb (x8), 4.5-5.5V, 5MHz, 10ms Write, Block Write Protection	PDIP8, SO8 Wide
	ST	M95256-V	256Kb (x8), 2.7-5.5V, 5MHz, 10ms Write, Block Write Protection	PDIP8, SO8 Wide
	ST	M95256-W	256Kb (x8), 2.5-5.5V, 2MHz, 10ms Write, Block Write Protection	PDIP8, TSSOP8, SO8 Wide

EEPROM Parallel part numbering guide - Xicor

X28H C 256 J I - 12

Technology CMOS

Size/Org
64 = 8 K x 8
256 = 32 K x 8
512/513 = 64 K x 8
010 =1 Mb

Package
D = CERDIP-28
J = PLCC-32
P = PDIP-28
S = SOIC-28
T = TSOP-32

Temp. Range
C = 0-70
I = -40 to +85
M = -55 to + 125

Access Speed
-70 = 70ns
-90 = 90ns
-12 = 120ns

EEPROM Parallel product guide

Mfr	Density	Organisation	Supply type (V)	Part No.	Package	Speed
XCR	64 K	x8	4.5-5.5	X28HC64	Pdip-28/Cdip-28/Plcc-32/Tsop32	70-120
XCR	256 K	x8	4.5-5.5	X28HC256	Pdip-28/Cdip-28/Plcc-32/Tsop32	70-150
XCR	512 K	x8	4.5-5.5	X28C512	Cdip-32/PLCC-32	120-250
XCR	512 K	x8	4.5-5.5	X28C513	PLCC-32	120-250
XCR	1 Mb	x8	4.5-5.5	X28C010	Cdip-32/PLCC-32	120-250

Serial FLASH part numbering guide - ST

- **High speed low voltage Flash Memory with an SPI bus compatible interface. This memory offers low pin count through a simple space saving 3-line interface with guaranteed upward and downward compatiblity to future higher and lower density devices. For low power consumption the devices feature low supply voltage and a deep power-down mode.**

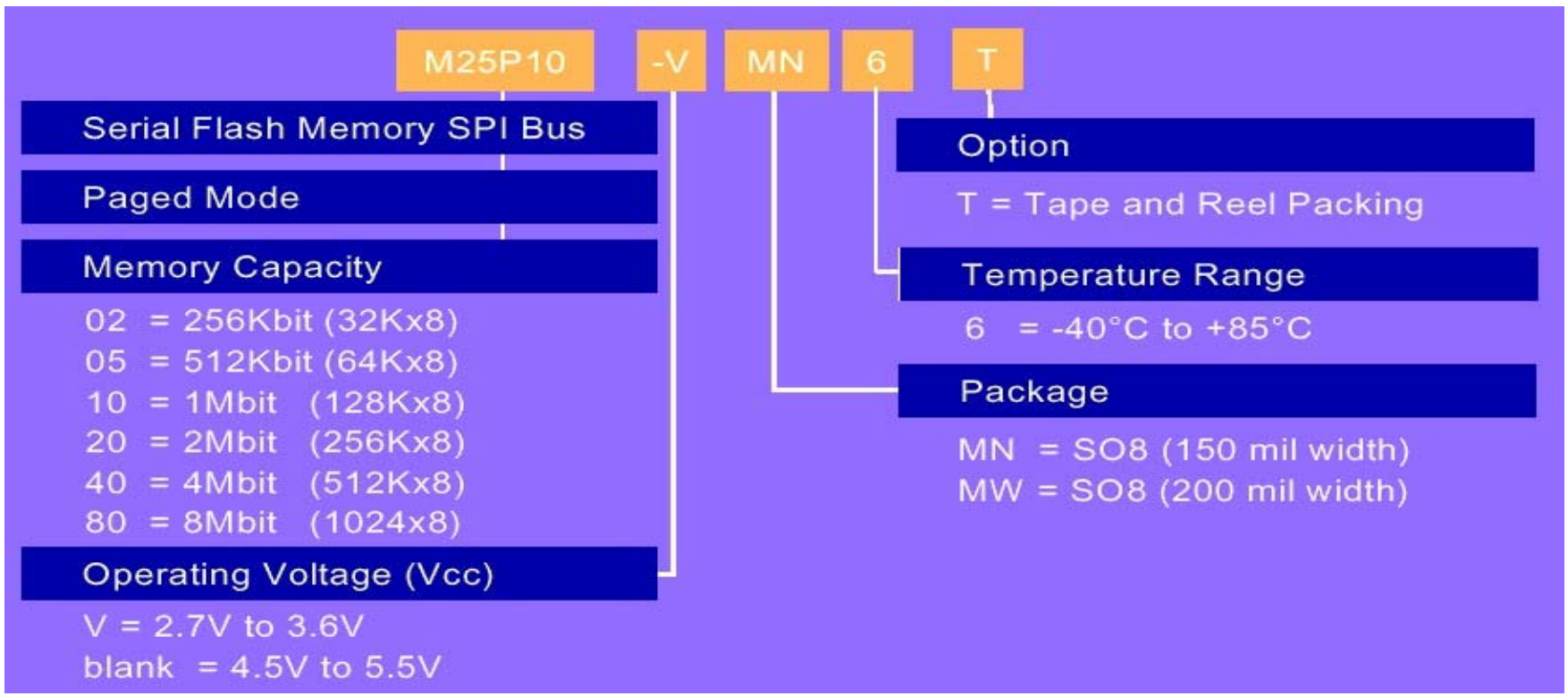

Serial FLASH product guide

Size	Ref	Description	Packages
512Kb	M25P05-AV	512Kb (256B Pages, two 256Kb Sectors), 25MHz SPI, Sequential Read 21ms, Sector or Bulk Erase, four Write Protection modes, 1uA Deep Power Down	SO8
1Mb	M25P10-AV	1Mb (256B Pages, four 256Kb Sectors), 25MHz SPI, Sequential Read 42ms, Sector or Bulk Erase, four Write Protection modes, 1uA Deep Power Down	SO8
2Mb	M25P20-V	2Mb (256B Pages, four 512Kb Sectors), 25MHz SPI, Sequential Read 84ms, Sector or Bulk Erase, four Write Protection modes, 1uA Deep Power Down	SO8
4Mb	M25P40-V	4Mb (256B Pages, 8X512Kb Sectors), 25MHz SPI, Sequential Read 168ms, Sector or Bulk Erase, four Write Protection modes, 1uA Deep Power Down	SO8
8Mb	M25P80-V	8Mb (256B Pages, 16X512Kb Sectors), 25MHz SPI, Sequential Read 335ms, Sector or Bulk Erase, Write Protection features, 1uA Deep Power Down	SO8W
16Mb	M25P16-V	16Mb (256B Pages, 32X512Kb Sectors), 25MHz SPI, Sequential Read 670ms, Sector or Bulk Erase, Write Protection features, 1uA Deep Power Down	MLP

FIFO part numbering guide - Cypress

CY 7C 4 225 V – 15 AS C

CYPRESS

Technology

C = CMOS

B = BiCMOS

FIFOs

DEVICE

VOLTAGE

5V = none

3.3V = V

2.5V = V25

SPEED on ns

Package

A = TQFP

AS = STQFP

BB = TBGA

J = PLCC

L = LCC

N = PBGA

P = P-DIP

V = SOJ

Temp. Range

C = Commercial

I = Industrial

FIFO part numbering guide - IDT

72 V 265 L A 15 PF I

FIFOs

VOLTAGE

none = 5V

V = 3.3V

T = 2.5V

DEVICE

POWER

S = Standard

L = Low-Power

Die revision

SPEED ns or MHz

Package

BB = BGA

J = PLCC

P/TP = P-DIP

PF = PQFP

SO = SOIC

TF = STQFP

Temp. Range

C = Commercial

I = Industrial

FIFO Product Guide

5V Synchronous FIFOs					
Description	Type	Organization	supplier	device	package
x8 Synch FIFOs	Unidirectional	64 x8	IDT	72420	P-DIP
		256 x8	IDT	72200	P-DIP
		512 x8	IDT	72210	P-DIP
		1K x8	IDT	72220	P-DIP
		2K x8	IDT	72230	P-DIP
		4K x8	IDT	72240	P-DIP
x9 Synch FIFOs	Unidirectional	64 x9	CYP	CY7C4421	TQFB, PLCC
			IDT	72421	PQFP, PLCC
		256 x9	CYP	CY7C4201	TQFB, PLCC
			IDT	72201	PQFP, PLCC
		512 x9	CYP	CY7C4211	TQFB, PLCC
			IDT	72211	PQFP, PLCC
		1K x9	CYP	CY7C4221	TQFB, PLCC
			IDT	72221	PQFP, PLCC
		2K x9	CYP	CY7C4231	TQFB, PLCC
			IDT	72231	PQFP, PLCC, CLCC
		4K x9	CYP	CY7C4241	TQFB, PLCC
			IDT	72241	PQFP, PLCC, CLCC
		8K x9	CYP	CY7C4251	TQFB, PLCC
			IDT	72251	PQFP, PLCC
		16K x9	CYP	CY7C4261	TQFB, PLCC
			IDT	72216	PQFP, STQFP
		32K x9	CYP	CY7C4271	TQFB, PLCC
			IDT	72271	PQFP, STQFP
		64K x9	CYP	CY7C4281	PLCC
				CY7C4282	TQFB
			IDT	72281	PQFP, STQFP
		128K x9	CYP	CY7C4291	PLCC
				CY7C4292	TQFB
			IDT	72291	PQFP, STQFP

FIFO Product Guide

5V Synchronous FIFOs					
Description	Type	Organization	supplier	device	package
x18 Synch FIFOs	Unidirectional	64 x18	CYP	CY7C4425	TQFP, STQFP
		256 x18	CYP	CY7C4205	TQFP, STQFP
			IDT	72205	PQFP, PLCC, STQFP
		512 x18	CYP	CY7C4215	TQFP, STQFP
			IDT	72215	PQFP, PLCC, STQFP
		1K x18	CYP	CY7C4225	TQFP, STQFP
			IDT	72225	PQFP, PLCC, STQFP
		2K x18	CYP	CY7C4235	TQFP, STQFP
			IDT	72235	PQFP, PLCC, STQFP
		4K x18	CYP	CY7C4245	TQFP, STQFP
			IDT	72245	PQFP, PLCC, STQFP
		8K x18	CYP	CY7C4255	TQFP, STQFP
			IDT	72255	PQFP, STQFP
		16K x18	CYP	CY7C4265	TQFP, STQFP
			IDT	72265	PQFP, STQFP
		32K x18	CYP	CY7C4275	STQFP
			IDT	72275	PQFP, STQFP
		64K x18	CYP	CY7C4285	STQFP
			IDT	72285	PQFP, STQFP
	Bi-Directional	256 x18 x2	IDT	72605	PQFP, PLCC

FIFO Product Guide

5V Synchronous FIFOs					
Description	Type	Organization	supplier	device	package
x36 Synch FIFOs	Unidirectional	64 x36	IDT	723611	PQFP
				723613	PQFP
		256 x36	IDT	723623	PQFP
		512 x36	IDT	723631	PQFP
				723633	PQFP
		1K x36	CYP	CY7C43643	TQFP
			IDT	723641	PQFP
				723643	PQFP
		2K x36	IDT	723651	PQFP
				723653	PQFP
		4K x36	CYP	CY7C43663	TQFP
			IDT	723663	PQFP
		8K x36	IDT	723673	PQFP
		16K x36	CYP	CY7C43683	TQFP
	Bi-Directional	64 x36 x2	IDT	723612	PQFP
				723614	PQFP
				7236616	PQFP
		256 x36 x2	IDT	723622	PQFP
				723624	PQFP
				723626	PQFP
		512 x36 x2	IDT	723632	PQFP
				723634	PQFP

FIFO Product Guide

5V Synchronous FIFOs					
Description	Type	Organization	supplier	device	package
x36 Synch FIFOs	Bi-Directional	1K x36 x2	CYP	CY7C43642	TQFP
				CY7C43644	TQFP
				CY7C43646	TQFP
			IDT	723642	PQFP
				723644	PQFP
				723646	PQFP
		2K x36 x2	IDT	723652	PQFP
				723654	PQFP
				723656	PQFP
		4K x36 x2	CYP	CY7C43662	TQFP
				CY7C43664	TQFP
				CY7V43666	TQFP
			IDT	723662	PQFP
				723664	PQFP
				723666	PQFP
		8K x36 x2	IDT	723672	PQFP
				723674	PQFP
				723676	PQFP
		16K x36 x2	CYP	CY7C43682	TQFP
				CY7C43684	TQFP

FIFO Product Guide

3.3V Synchronous FIFOs					
Description	Type	Organization	supplier	device	package
x9 Synch FIFOs	Unidirectional	64 x9	CYP	CY7C4421V	TQFB, PLCC
		256 x9	CYP	CY7C4201V	TQFB, PLCC
			IDT	72V201	PQFP, PLCC
		512 x9	CYP	CY7C4211V	TQFB, PLCC
			IDT	72V211	PQFP, PLCC
		1K x9	CYP	CY7C4221V	TQFB, PLCC
			IDT	72V221	PQFP, PLCC
		2K x9	CYP	CY7C4231V	TQFB, PLCC
			IDT	72V231	PQFP, PLCC, CLCC
		4K x9	CYP	CY7C4241V	TQFB, PLCC
			IDT	72V241	PQFP, PLCC, CLCC
		8K x9	CYP	CY7C4251V	TQFB, PLCC
			IDT	72V251	PQFP, PLCC
		16K x9	CYP	CY7C4261V	PLCC
			IDT	72V261	PQFP, STQFP
				72V263	PQFP
		32K x9	CYP	CY7C4271V	PLCC
			IDT	72V271	PQFP, STQFP
				72V273	PQFP
		64K x9	CYP	CY7C4281V	PLCC
				CY7C4282V	TQFB
			IDT	72V281	PQFP, STQFP
				72V283	PQFP

FIFO Product Guide

3.3V Synchronous FIFOs					
Description	Type	Organization	supplier	device	package
x9 Synch FIFOs	Unidirectional	128K x9	CYP	CY7C4291V	PLCC
				CY7C4292V	TQFB
			IDT	72V291	PQFP, STQFP
				72V293	PQFP
		256K x9	IDT	72V2101	PQFP
				72V2103	PQFP
		512K x9	IDT	72V2111	PQFP
				72V2113	PQFP
x18 Synch FIFOs	Unidirectional	64 x18	CYP	CY7C4425V	STQFP
		256 x18	CYP	CY7C4205V	TQFP, STQFP
			IDT	72V205	PQFP, PLCC, STQFP
		512 x18	CYP	CY7C4215V	STQFP
			IDT	72V215	PQFP, STQFP
		1K x18	CYP	CY7C4225V	STQFP
			IDT	72V225	PQFP, STQFP
		2K x18	CYP	CY7C4235V	STQFP
			IDT	72V235	PQFP, STQFP
		4K x18	CYP	CY7C4245V	STQFP
			IDT	72V245	PQFP, STQFP
		8K x18	CYP	CY7C4255V	STQFP
			IDT	72V255	PQFP, STQFP
				72V263	PQFP
		16K x18	CYP	CY7C4265V	STQFP
			IDT	72V265	PQFP, STQFP
				72V273	PQFP

FIFO Product Guide

3.3V Synchronous FIFOs					
Description	Type	Organization	supplier	device	package
		32K x18	CYP	CY7C4275V	STQFP
			IDT	72V275	PQFP, STQFP
				72V283	PQFP
		64K x18	CYP	CY7C4285V	STQFP
			IDT	72V285	PQFP, STQFP
				72V293	PQFP
		128K x18	IDT	72V295	PQFP
				72V2103	PQFP
		256K x18	IDT	72V2105	PQFP
				72V2113	PQFP
x36 Synch FIFOs	Unidirectional	64 x36	IDT	72V3611	PQFP
				72V3613	PQFP
		256 x36	IDT	72V3623	PQFP
		512 x36	IDT	72V3631	PQFP
				72V3633	PQFP
		1K x36	CYP	CY7C43643AV	TQFP
			IDT	72V3640	PQFP
				72V3641	PQFP
				72V3643	PQFP
		2K x36	IDT	72V3650	PQFP
				72V3651	PQFP
		4K x36	CYP	CY7C43663AV	TQFP
			IDT	72V3660	PQFP
		8K x36	IDT	72V3670	PQFP
		16K x36	CYP	CY7C43683AV	TQFP
			IDT	72V3680	PQFP
		32K x18	IDT	72V3690	PQFP
		64K x18	IDT	72V36100	PQFP
		128K x18	IDT	72V36110	PQFP

FIFO Product Guide

3.3V Synchronous FIFOs					
Description	Type	Organization	supplier	device	package
x36 Synch FIFOs	Bi-Directional	64 x36 x2	IDT	72V3612	PQFP
				72V3614	PQFP
		256 x36 x2	IDT	72V3622	PQFP
				72V3624	PQFP
				72V3626	PQFP
		512 x36 x2	IDT	72V3632	PQFP
				72V3634	PQFP
				72V3636	PQFP
		1K x36 x2	CYP	CY7C43642AV	TQFP
				CY7C43644AV	TQFP
				CY7C43646AV	TQFP
			IDT	72V3642	PQFP
				72V3644	PQFP
				72V3646	PQFP
		2K x36 x2	IDT	72V3652	PQFP
				72V3654	PQFP
				72V3656	PQFP
		4K x36 x2	CYP	CY7C43662AV	TQFP
				CY7C43664AV	TQFP
				CY7V43666AV	TQFP
			IDT	72V3662	PQFP
				72V3664	PQFP
				72V3666	PQFP
		8K x36 x2	IDT	723672	PQFP
				723674	PQFP
				723676	PQFP

FIFO Product Guide

3.3V Synchronous FIFOs					
Description	Type	Organization	supplier	device	package
x36 Synch FIFOs	Bi-Directional	16K x36 x2	CYP	CY7C43682AV	TQFP
				CY7C43684AV	TQFP
				CY7C43686AV	TQFP
			IDT	72V3682	PQFP
				72V3684	PQFP
				72V3686	PQFP
		32K x36 x2	IDT	72V3692	PQFP
				72V3694	PQFP
				72V3696	PQFP
		64K x36 x2	IDT	72V36102	PQFP
				72V36104	PQFP
				72V36106	PQFP
x72 Synch FIFOs	Unidirectional	512 x72	IDT	72V7230	BGA
		1K x72	IDT	72V7240	BGA
		2K x72	IDT	72V7250	BGA
		4K x72	IDT	72V7260	BGA
		8K x72	IDT	72V7270	BGA
		16K x72	IDT	72V7280	BGA
		32K x72	IDT	72V7290	BGA
		64K x72	IDT	72V72100	BGA

FIFO Product Guide

2.5V Synchronous FIFOs					
Description	Type	Organization	supplier	device	package
x9 Synch FIFOs	Unidirectional	4K x9	IDT	72T1845	BGA
		8K x9	IDT	72T1855	BGA
		16K x9	IDT	72T1865	BGA
		32K x9	IDT	72T1875	BGA
		64K x9	IDT	72T1885	BGA
		128K x9	IDT	72T1895	BGA
		256K x9	IDT	72T18105	BGA
		512K x9	IDT	72T18115	BGA
		1M x9	IDT	72T18125	BGA
x18 Synch FIFOs	Unidirectional	2K x18	IDT	72T1845	BGA
		4K x18	IDT	72T1855	BGA
		8K x18	IDT	72T1865	BGA
		16K x18	IDT	72T1875	BGA
		32K x18	IDT	72T1885	BGA
		64K x18	IDT	72T1895	BGA
		128K x18	IDT	72T18105	BGA
		256K x18	IDT	72T18115	BGA
		512K x18	IDT	72T18125	BGA

FIFO Product Guide

2.5V Synchronous FIFOs					
Description	Type	Organization	supplier	device	package
x36 Synch FIFOs	Unidirectional	1K x36	IDT	72T3645	BGA
		2K x36	IDT	72T3655	BGA
		4K x36	IDT	72T3665	BGA
		8K x36	IDT	72T3675	BGA
		16K x36	IDT	72T3685	BGA
		32K x36	IDT	72T3695	BGA
		64K x36	IDT	72T36105	BGA
		128K x36	IDT	72T36115	BGA
		256K x36	IDT	72T36125	BGA
x72 Synch FIFOs	Unidirectional	16K x72	IDT	72T7285	BGA
		32K x72	IDT	72T7295	BGA
		64K x72	IDT	72T72105	BGA
		128K x72	IDT	72T72115	BGA
x80 Synch FIFOs	Unidirectional	4K x80	CYP	CY7C4804V25	TBGA
		16K x80	CYP	CY7C4806V25	TBGA
		64K x80	CYP	CY7V4808V25	TBGA

FIFO Product Guide

ASynchronous FIFOs					
Description	Organization	Volt.	supplier	device	package
x9 ASynch FIFOs Unidirectional	256 x9	5V	CYP	CY7C419	TQFP, PLCC, SOJ
			IDT	7200	P-DIPS, SOIC, CERDIP, PLCC
	512 x9	3.3V	IDT	72V01	PLCC
		5V	CYP	CY7C421	TQFP, PLCC, SOJ, P-DIP
			IDT	7201	P-DIP, P-DIPS, SOIC, PLCC, CERDIP, CLCC
	1K x9	3.3V	IDT	72V02	PLCC
		5V	CYP	CY7C425	TQFP, PLCC, SOJ, P-DIP, LCC
			IDT	7202	P-DIP, P-DIPS, SOIC, PLCC, CERDIP, CLCC
	2K x9	3.3V	IDT	72V03	PLCC
		5V	CYP	CY7C429	TQFP, PLCC, SOJ, P-DIP, LCC
			IDT	7203	P-DIP, P-DIPS, PLCC, CERDIP, CLCC
	4K x9	3.3V	IDT	72V04	PLCC
		5V	CYP	CY7C433	TQFP, PLCC, SOJ, P-DIP, LCC
			IDT	7204	P-DIP, P-DIPS, SOIC, PLCC, CERDIP, CLCC
	8K x9	3.3V	IDT	72V05	PLCC
		5V	IDT	7205	P-DIP, P-DIPS, PLCC, CERDIP, CLCC
	16K x9	3.3V	IDT	72V06	PLCC
		5V	IDT	7206	P-DIP, P-DIPS, PLCC, CERDIP, CLCC
	32K x9	5V	IDT	7207	P-DIP, PLCC, CERDIP, CLCC
	64K x9	5V	IDT	7208	P-DIP, PLCC

Dual-Port RAM part numbering guide - Cypress

CY 7C 09359 A V –12 A I

CYPRESS

Technology

C = CMOS

B = BiCMOS

DEVICE

Die Revision

SPEED on ns

VOLTAGE

5V = blank

3.3V = V

2.5V = V25

Temp. Range

C = Commercial

I = Industrial

Package

A = TQFP

AS = STQFP

BB = TBGA

J = PLCC

N = PBGA

P = P-DIP

Dual-Port RAM part numbering guide - IDT

70 V 05 L 20 J I

Dual-Port

VOLTAGE

none = 5V

V = 3.3V

T = 2.5V

DEVICE

POWER

S = Standard

L = Low-Power

SPEED on ns

Package

C = Sidebraze

F = Flat pack

G = Ceramic PGA

GB = PBGA

J = PLCC

L = CLCC

P = P-DIP

PF = PQFP

TF = STQFP

Temp. Range

C = Commercial

I = Industrial

DUAL PORT RAM product guide

ASynchronous Dual-Port RAMs					
Description	Organization	Volt.	supplier	device	package
x8 ASynch D-Port	1K x8	3.3V	IDT	71V30	STQFP
		5V	CYP	CY7C130	P-DIP
				CY7C131	PLCC
				CY7C140	P-DIP
				CY7C141	PLCC
			IDT	7130	P-DIP, Sidebraze, PLCC, CLCC, Flapack, PQFP, STQFP
				7140	P-DIP, Sidebraze, PLCC, CLCC, Flapack, PQFP
	2K x8	3.3V	IDT	71V321	PLCC, PQFP, STQFP
		5V	CYP	CY7C132	P-DIP
				CY7C136	PLCC
				CY7C142	P-DIP
				CY7C146	PLCC
			IDT	7132	P-DIP, Sidebraze, PLCC, CLCC, Flapack
				71321	PLCC, PQFP, STQFP
				7142	P-DIP, Sidebraze, PLCC, CLCC, Flapack
				71421	PLCC, PQFP
	4K x8	3.3V	CYP	CY7C138AV	PLCC
		5V	CYP	CY7C135	PLCC
				CY7C1342	PLCC
				CY7C138	PLCC
			IDT	7134	P-DIP, Sidebraze, PLCC, CLCC, Flapack
				71342	PLCC, PQFP

DUAL PORT RAM product guide

ASynchronous Dual-Port RAMs					
Description	Organization	Volt.	supplier	device	package
	8K x8	3.3V	CYP	CY7C144AV	PLCC, TQFP
			IDT	70V05	CPGA, PLCC, PQFP
		5V	CYP	CY7C144	PLCC, TQFP
			IDT	7005	CPGA, PLCC, PQFP, Flatpack
	16K x8	3.3V	CYP	CY7C006AV	PLCC, TQFP
			IDT	70V06	CPGA, PLCC, PQFP
		5V	CYP	CY7C006	PLCC, TQFP
			IDT	7006	CPGA, PLCC, PQFP, Flatpack
	32K x8	3.3V	CYP	CY7C007AV	TQFP
			IDT	70V07	CPGA, PLCC, PQFP
		5V	CYP	CY7C007A	TQFP
			IDT	7007	CPGA, PLCC, PQFP
	64K x8	3.3V	CYP	CY7C008V	TQFP
			IDT	70V08	PQFP
		5V	CYP	CY7C008	TQFP
			IDT	7008	CPGA, PLCC, PQFP
	128K x8	3.3V	CYP	CY7C009V	TQFP
			IDT	70V09	PQFP
		5V	CYP	CY7C009	TQFP
			IDT	7009	PQFP

DUAL PORT RAM product guide

ASynchronous Dual-Port RAMs					
Description	Organization	Volt.	supplier	device	package
x9 ASynch D-Port	2K x9	5V	IDT	70121	PLCC
				70125	PLCC
	4K x9	3.3V	CYP	CY7C139AV	PLCC
		5V	CYP	CY7C139	PLCC
			IDT	7014	PLCC, PQFP
	8K x9	3.3V	CYP	CY7C145AV	PLCC, TQFP
		5V	CYP	CY7C145	PLCC, TQFP
			IDT	7015	CPGA, PLCC, PQFP
	16K x9	3.3V	CYP	CY7C016AV	PLCC, TQFP
		5V	CYP	CY7C016A	PLCC, TQFP
			IDT	7016	CPGA, PLCC, PQFP
	32K x9	3.3V	CYP	CY7C017AV	TQFP
		5V	CYP	CY7C017A	TQFP
	64K x9	3.3V	CYP	CY7C018V	TQFP
			IDT	70V18	PQFP
		5V	CYP	CY7C018	TQFP
			IDT	7018	PQFP
	128K x9	3.3V	CYP	CY7C019AV	TQFP
			IDT	70V19	PQFP
		5V	CYP	CY7C019	TQFP
			IDT	7019	PQFP

DUAL PORT RAM product guide

ASynchronous Dual-Port RAMs					
Description	Organization	Volt.	supplier	device	package
x16 ASynch D-Port	2K x16	5V	CYP	CY7C133	PLCC
				CY7C143	PLCC
			IDT	7133	CPGA, PLCC, PQFP, Flatpack
				71430	CPGA, PLCC, PQFP, Flatpack
	4K x16	3.3V	CYP	CY7C024AV	PLCC, TQFP
			IDT	70V24	CPGA, PLCC, PQFP
		5V	CYP	CY7C024	PLCC, TQFP
			IDT	7024	CPGA, PLCC, PQFP
	8K x16	3.3V	CYP	CY7C025AV	PLCC, TQFP
			IDT	70V25	CPGA, PLCC, PQFP
		5V	CYP	CY7C025	PLCC, TQFP
			IDT	7025	CPGA, PLCC, PQFP
	16K x16	3.3V	CYP	CY7C026AV	PLCC
			IDT	70V26	CPGA, PLCC
			IDT	70V261	PQFP
		5V	CYP	CY7C026A	PLCC
			IDT	7026	CPGA, PLCC
			IDT	70261	PQFP
	32K x16	3.3V	CYP	CY7C027V	PLCC
			IDT	70V27	CPGA, PQFP, PBGA
		5V	CYP	CY7C027	PLCC
			IDT	7027	CPGA, PQFP
	64K x16	3.3V	CYP	CY7C028V	PLCC
			IDT	70V28	PQFP
		5V	CYP	CY7C028	PLCC
			IDT	7028	PQFP

DUAL PORT RAM product guide

ASynchronous Dual-Port RAMs					
Description	Organization	Volt.	supplier	device	package
x18 ASynch D-Port	4K x18	3.3V	CYP	CY7C0241AV	TQFP
		5V	CYP	CY7C0241	TQFP
			IDT	7034	PQFP
	8K x18	3.3V	CYP	CY7C0251AV	PLCC
			IDT	70V35	PQFP
		5V	CYP	CY7C0251	PLCC
			IDT	7035	PQFP
	16K x18	3.3V	CYP	CY7C036AV	PLCC
		5V	CYP	CY7C036	PLCC
	32K x18	3.3V	CYP	CY7C037V	PLCC
			IDT	70V37	PQFP
		5V	CYP	CY7C037	PLCC
			IDT	7037	PQFP
	64K x18	3.3V	CYP	CY7C038V	PLCC
			IDT	70V38	PQFP
		5V	CYP	CY7C038	PLCC
			IDT	7038	PQFP
	128K x18	3.3V	IDT	70V639	TQFP, PBGA
	256K x18	3.3V	IDT	70V631	TQFP, PBGA
x36 ASynch D-Port	16K x36	3.3V	CYP	CY7C056V	TQFP, TBGA
	32K x36	3.3V	CYP	CY7C057V	TQFP, TBGA
			IDT	70V657	PQFP, PBGA
	64K x36	3.3V	IDT	70V658	PQFP, PBGA
	128K x36	3.3V	IDT	70V659	PQFP, PBGA

DUAL PORT RAM product guide

Synchronous Dual-Port RAMs					
Description	Organization	Volt.	supplier	device	package
x8 Synch D-Port	32K x8	3.3V	CYP	CY7C09079V	TQFP
			IDT	70V9079	PQFP
		5V	CYP	CY7C09079A	TQFP
			IDT	709079	PQFP
	64K x8	3.3V	CYP	CY7C09089V	TQFP
			IDT	70V9089	PQFP
		5V	CYP	CY7C09089	TQFP
			IDT	709089	PQFP
	128K x8	3.3V	CYP	CY7C09099V	TQFP
			IDT	70V9099	PQFP
		5V	CYP	CY7C09099	TQFP
			IDT	709099	PQFP
x9 Synch D-Port	4K x9	3.3V	IDT	70V914	PLCC, PQFP
		5V	IDT	70914	PLCC, PQFP
	8K x9	3.3V	CYP	CY7C09159AV	TQFP
		5V	CYP	CY7C09159A	TQFP
	16K x9	3.3V	CYP	CY7C09169AV	TQFP
		5V	CYP	CY7C09169A	TQFP
	32K x9	3.3V	CYP	CY7C09179V	TQFP
		5V	CYP	CY7C09179A	TQFP
	64K x9	3.3V	CYP	CY7C09189V	TQFP
			IDT	70V9189	PQFP
		5V	CYP	CY7C09189	TQFP
			IDT	709189	PQFP
	128K x9	3.3V	CYP	CY7C09199V	TQFP
			IDT	70V9199	PQFP
		5V	CYP	CY7C09199	TQFP
			IDT	709199	PQFP

DUAL PORT RAM product guide

Synchronous Dual-Port RAMs					
Description	Organization	Volt.	supplier	device	package
x16 Synch D-Port	16K x16	3.3V	CYP	CY7C09269V	TQFP
			IDT	70V9269	TQFP
		5V	CYP	CY7C09269A	TQFP
			IDT	709269	PQFP
	32K x16	3.3V	CYP	CY7C09279V	TQFP
			IDT	70V9279	TQFP
		5V	CYP	CY7C09279	TQFP
			IDT	709279	PQFP
	64K x16	3.3V	CYP	CY7C9289V	TQFP
			IDT	70V9289	TQFP
		5V	CYP	CY7C9289	TQFP
			IDT	709289	PQFP

DUAL PORT RAM product guide

Synchronous Dual-Port RAMs					
Description	Organization	Volt.	supplier	device	package
x18 Synch D-Port	4K x18	3.3V	CYP	CY7C09349AV	TQFP
		5V	CYP	CY7C09349A	TQFP
	8K x18	3.3V	CYP	CY7C09359AV	TQFP
		5V	CYP	CY7C09359A	TQFP
	16K x18	3.3V	CYP	CY7C09369V	TQFP
		5V	CYP	CY7C09369A	TQFP
	32K x18	3.3V	CYP	CY7C09379V	TQFP
			IDT	70V3379	TQFP, PBGA
			IDT	70V9379	TQFP
		5V	CYP	CY7C09379	TQFP
			IDT	709379	PQFP
	64K x18	3.3V	CYP	CY7C09389V	TQFP
			IDT	70V3389	TQFP, PBGA
			IDT	70V9389	TQFP, PBGA
		5V	CYP	CY7C09389	TQFP
			IDT	709389	PQFP
	128K x18	3.3V	CYP	CY7C0831V	TQFP
			IDT	70V3399	TQFP, PBGA
	256K x18	3.3V	CYP	CY7C0832V	TQFP
			IDT	70V3319	TQFP, PBGA

DUAL PORT RAM product guide

Synchronous Dual-Port RAMs					
Description	Organization	Volt.	supplier	device	package
x36 Synch D-Port	16K x36	3.3V	CYP	CY7C09596V	TQFP, TBGA
			IDT	70V3569	TQFP, PBGA
	32K x36	3.3V	CYP	CY7C09579V	TQFP, TBGA
			IDT	70V3579	TQFP, PBGA
	64K x36	2.5V	CYP	CY7C0851V25	TBGA
		3.3V	CYP	CY7C0851V	TBGA
			IDT	70V3589	TQFP, PBGA
	128K x36	2.5V	CYP	CY7C0852V25	TBGA
		3.3V	CYP	CY7C0852V	TBGA
			IDT	70V3599	TQFP, PBGA

PSD Glossary

- **Flash PSDs** - are configurable memory systems on a chip. They contain everything required to add Flash memory and programmable logic to virtually any embedded microcontroller design. By adding a single Flash PSD chip, up to 12 devices can be eliminated from the board.

- **OTP PSDs** - For applications where the code is stable and there is no need for re-programmable Flash, there are two families of EPROM based PSDs. They integrate EPROM memory, an optional SRAM, decode logic, I/O expansion, power management and security, and like Flash PSDs, they provide a configurable microcontroller interface capable of interfacing with virtually any microcontroller.

PSD part numbering guide - ST

PSD 41 3 5 G 2 – 70U I

PSD = General Purpose

DSM = Dedicated for DSP

TEMPERATURE

Blank = COM

I or 6= IND

Families

8-Bit Devices

9= Memory System

8= Plus CPLD

16-Bit Devices

41= Memory System

42= Plus CPLD

I/O Count

F=52 Pins

G=80 Pins

SRAM Size

1=16Kb

3=64Kb

5=256Kb

7=1024Kb

Main Flash Size

3=1Meg

4=2Meg

5=4Meg

6=8Meg

PSD part numbering guide - ST

PSD4135G 2 V – 70 U

Boot Memory techno
1 = 256Kb EEPROM
2 = 256Kb Flash
6 = only for 4256G6

Blank = 5V

V = 3V

SPEED

Package

U,M,T= QFP

J,K = PLCC

PSD Product guide Flash 5V

Ref	Supplier	Supply voltage	Description	Packages
PSD813F1	ST	5V	Main Flash 1Mb (x8), EEPROM 256Kb, SRAM 16Kb, Complex PLD, 27 I/O	PLCC52, PQFP52
PSD813F2	ST	5V	Main Flash 1Mb (x8), Concurrent Flash 256Kb, SRAM 16Kb, Complex PLD, 27 I/O	PLCC52, PQFP52
PSD813F3	ST	5V	Main Flash 1Mb (x8), SRAM 16Kb, Complex PLD, 27 I/O	PLCC52, PQFP52
PSD813F4	ST	5V	Main Flash 1Mb (x8), Concurrent Flash 256Kb, Complex PLD, 27 I/O	PLCC52, PQFP52
PSD813F5	ST	5V	Main Flash 1Mb (x8), Complex PLD, 27 I/O	PLCC52, PQFP52
PSD833F2	ST	5V	Main Flash 1Mb (x8), Concurrent Flash 256Kb, SRAM 64Kb, Complex PLD, 27 I/O	PLCC52, PQFP52
PSD834F2	ST	5V	Main Flash 2Mb (x8), Concurrent Flash 256Kb, SRAM 64Kb, Complex PLD, 27 I/O	PLCC52, PQFP52
PSD835G2	ST	5V	Main Flash 4Mb (x8), Concurrent Flash 256Kb, SRAM 64Kb, Complex PLD, 52 I/O	PLCC52, PQFP52
PSD853F2	ST	5V	Main Flash 1Mb (x8), Concurrent Flash 256Kb, SRAM 256Kb, Complex PLD, 27 I/O	PLCC52, PQFP52
PSD854F2	ST	5V	Main Flash 2Mb (x8), Concurrent Flash 256Kb, SRAM 256Kb, Complex PLD, 27 I/O	PLCC52, PQFP52
PSD913F1	ST	5V	Main Flash 1Mb (x8), EEPROM 256Kb, SRAM 16Kb, Simple PLD, 27 I/O	PLCC52, PQFP52
PSD913F2	ST	5V	Main Flash 1Mb (x8), Concurrent Flash 256Kb, SRAM 16Kb, Simple PLD, 27 I/O	PLCC52, PQFP52
PSD934F2	ST	5V	Main Flash 2Mb (x8), Concurrent Flash 256Kb, SRAM 64Kb, Simple PLD, 27 I/O	PLCC52, PQFP52
PSD935G2	ST	5V	Main Flash 4Mb (x8), Concurrent Flash 256Kb, SRAM 64Kb, Simple PLD, 52 I/O	PLCC52, PQFP52
PSD954F2	ST	5V	Main Flash 2Mb (x8), Concurrent Flash 256Kb, SRAM 256Kb, Simple PLD, 27 I/O	PLCC52, PQFP52
PSD4135G2	ST	5V	Main Flash 4Mb (x16), Concurrent Flash 256Kb, SRAM 64Kb, Simple PLD, 52 I/O	PQFP80
PSD4235G2	ST	5V	Main Flash 4Mb (x16), Concurrent Flash 256Kb, SRAM 64Kb, Complex PLD, 52 I/O	PQFP80

PSD Product guide Flash 3V

Ref	Supplier	Supply voltage	Description	Packages
PSD813F1V	ST	3V	Main Flash 1Mb (x8), EEPROM 256Kb, SRAM 16Kb, Complex PLD, 27 I/O	PLCC52, PQFP52
PSD813F2V	ST	3V	Main Flash 1Mb (x8), Concurrent Flash 256Kb, SRAM 16Kb, Complex PLD, 27 I/O	PLCC52, PQFP52
PSD813F3V	ST	3V	Main Flash 1Mb (x8), SRAM 16Kb, Complex PLD, 27 I/O	PLCC52, PQFP52
PSD813F4V	ST	3V	Main Flash 1Mb (x8), Concurrent Flash 256Kb, Complex PLD, 27 I/O	PLCC52, PQFP52
PSD813F5V	ST	3V	Main Flash 1Mb (x8), Complex PLD, 27 I/O	PLCC52, PQFP52
PSD833F2V	ST	3V	Main Flash 1Mb (x8), Concurrent Flash 256Kb, SRAM 64Kb, Complex PLD, 27 I/O	PLCC52, PQFP52
PSD834F2V	ST	3V	Main Flash 2Mb (x8), Concurrent Flash 256Kb, SRAM 64Kb, Complex PLD, 27 I/O	PLCC52, PQFP52
PSD835G2V	ST	3V	Main Flash 4Mb (x8), Concurrent Flash 256Kb, SRAM 64Kb, Complex PLD, 52 I/O	PLCC52, PQFP52
PSD854F2V	ST	3V	Main Flash 2Mb (x8), Concurrent Flash 256Kb, SRAM 256Kb, Complex PLD, 27 I/O	PLCC52, PQFP52
PSD913F1V	ST	3V	Main Flash 1Mb (x8), EEPROM 256Kb, SRAM 16Kb, Simple PLD, 27 I/O	PLCC52, PQFP52
PSD913F2V	ST	3V	Main Flash 1Mb (x8), Concurrent Flash 256Kb, SRAM 16Kb, Simple PLD, 27 I/O	PLCC52, PQFP52
PSD934F2V	ST	3V	Main Flash 2Mb (x8), Concurrent Flash 256Kb, SRAM 64Kb, Simple PLD, 27 I/O	PLCC52, PQFP52
PSD935G2V	ST	3V	Main Flash 4Mb (x8), Concurrent Flash 256Kb, SRAM 64Kb, Simple PLD, 52 I/O	PLCC52, PQFP52
PSD954F2V	ST	3V	Main Flash 2Mb (x8), Concurrent Flash 256Kb, SRAM 256Kb, Simple PLD, 27 I/O	PLCC52, PQFP52
PSD4135G2V	ST	3V	Main Flash 4Mb (x16), Concurrent Flash 256Kb, SRAM 64Kb, Simple PLD, 52 I/O	PQFP80
PSD4235G2V	ST	3V	Main Flash 4Mb (x16), Concurrent Flash 256Kb, SRAM 64Kb, Complex PLD, 52 I/O	PQFP80
PSD4256G6V	ST	3V	8Mb + 512Kb Flash(x16), 256Kb SRAM, PLD, 52 I/O	TQFP80

PSD Product guide OTP 5V

Ref	Supplier	Supply voltage	Description	Packages
PSD211R	ST	5V	256Kb (x8) EPROM, Decode PLD, 19 I/O	PLCC44, PQFP44
PSD301	ST	5V	256Kb (x16) EPROM, 16Kb SRAM, Decode PLD, 19 I/O	PLCC44, PQFP44, TQFP44
PSD301R	ST	5V	256Kb (x16) EPROM, Decode PLD, 19 I/O	PLCC44
PSD302	ST	5V	512Kb (x16) EPROM, 16Kb SRAM, Decode PLD, 19 I/O	PLCC44, PQFP44, TQFP44
PSD302R	ST	5V	512Kb (x16) EPROM, Decode PLD, 19 I/O	PLCC44
PSD303	ST	5V	1Mb (x16) EPROM, 16Kb SRAM, Decode PLD, 19 I/O	PLCC44, PQFP44, TQFP44
PSD303R	ST	5V	1Mb (x16) EPROM, Decode PLD, 19 I/O	PLCC44
PSD311	ST	5V	256Kb (x8) EPROM, 16Kb SRAM, Decode PLD, 19 I/O	PLCC44, PQFP44, TQFP44
PSD311R	ST	5V	256Kb (x8) EPROM, Decode PLD, 19 I/O	PLCC44
PSD312	ST	5V	512Kb (x8) EPROM, 16Kb SRAM, Decode PLD, 19 I/O	PLCC44, PQFP44, TQFP44
PSD312R	ST	5V	512Kb (x8) EPROM, Decode PLD, 19 I/O	PLCC44
PSD313	ST	5V	1Mb (x8) EPROM, 16Kb SRAM, Decode PLD, 19 I/O	PLCC44, PQFP44, TQFP44
PSD313R	ST	5V	1Mb (x8) EPROM, Decode PLD, 19 I/O	PLCC44
PSD401A1	ST	5V	256Kb (x16) EPROM, 16Kb SRAM, Decode, 40 I/O, 8 Macrocell PLD	PLCC68, TQFP68
PSD401A2	ST	5V	256Kb (x16) EPROM, 16Kb SRAM, Decode, 40 I/O, 24 Macrocell PLD	PLCC68, TQFP68
PSD402A1	ST	5V	512Kb (x16) EPROM, 16Kb SRAM, Decode, 40 I/O, 8 Macrocell PLD	PLCC68, TQFP68
PSD402A2	ST	5V	512Kb (x16) EPROM, 16Kb SRAM, Decode, 40 I/O, 24 Macrocell PLD	PLCC68, TQFP68
PSD403A1	ST	5V	1Mbit (x16) EPROM, 16Kb SRAM, Decode, 40 I/O, 8 Macrocell PLD	PLCC68, TQFP68
PSD403A2	ST	5V	1Mbit (x16) EPROM, 16Kb SRAM, Decode, 40 I/O, 24 Macrocell PLD	PLCC68, TQFP68
PSD411A1	ST	5V	256Kb(x8) EPROM, 16Kb SRAM, Decode, 40 I/O, 8 Macrocell PLD	PLCC68, TQFP68
PSD411A2	ST	5V	256Kb (x8) EPROM, 16Kb SRAM, Decode, 40 I/O, 24 Macrocell PLD	PLCC68, TQFP68
PSD412A1	ST	5V	512Kb (x8) EPROM, 16Kb SRAM, Decode, 40 I/O, 8 Macrocell PLD	PLCC68, TQFP68
PSD412A2	ST	5V	512Kb (x8) EPROM, 16Kb SRAM, Decode, 40 I/O, 24 Macrocell PLD	PLCC68, TQFP68
PSD413A1	ST	5V	1Mbit (x8) EPROM, 16Kb SRAM, Decode, 40 I/O, 8 Macrocell PLD	PLCC68, TQFP68
PSD413A2	ST	5V	1Mbit (x8) EPROM, 16Kb SRAM, Decode, 40 I/O, 24 Macrocell PLD	PLCC68, TQFP68
PSD501B1	ST	5V	256Kb (x16) EPROM, 16Kb SRAM, Decode, 40 I/O, PLD, Counters/Timers	PLCC68, TQFP68
PSD502B1	ST	5V	512Kb (x16) EPROM, 16Kb SRAM, Decode, 40 I/O, PLD, Counters/Timers	PLCC68, TQFP68
PSD503B1	ST	5V	1Mbit (x16) EPROM, 16Kb SRAM, Decode, 40 I/O, PLD, Counters/Timers	PLCC68, TQFP68
PSD511B1	ST	5V	256Kb (x8) EPROM, 16Kb SRAM, Decode, 40 I/O, PLD, Counters/Timers	PLCC68, TQFP68
PSD512B1	ST	5V	512Kb (x8) EPROM, 16Kb SRAM, Decode, 40 I/O, PLD, Counters/Timers	PLCC68, TQFP68
PSD513B1	ST	5V	1Mbit (x8) EPROM, 16Kb SRAM, Decode, 40 I/O, PLD, Counters/Timers	PLCC68, TQFP68

PSD Product guide Zero power OTP

Ref	Supplier	Supply voltage	Description	Packages
ZPSD211R	ST	5V	256Kb (x8) EPROM, Decode PLD, 19 I/O	PLCC44, PQFP44
ZPSD301	ST	5V	256Kb (x16) EPROM, 16Kb SRAM, Decode PLD, 19 I/O	PLCC44, PQFP44, TQFP44
ZPSD301R	ST	5V	256Kb (x16) EPROM, Decode PLD, 19 I/O	PLCC44
ZPSD302	ST	5V	512Kb (x16) EPROM, 16Kb SRAM, Decode PLD, 19 I/O	PLCC44, PQFP44, TQFP44
ZPSD302R	ST	5V	512Kb (x16) EPROM, Decode PLD, 19 I/O	PLCC44
ZPSD303	ST	5V	1Mb (x16) EPROM, 16Kb SRAM, Decode PLD, 19 I/O	PLCC44, PQFP44, TQFP44
ZPSD303R	ST	5V	1Mb (x16) EPROM, Decode PLD, 19 I/O	PLCC44
ZPSD311	ST	5V	256Kb (x8) EPROM, 16Kb SRAM, Decode PLD, 19 I/O	PLCC44, PQFP44, TQFP44
ZPSD311R	ST	5V	256Kb (x8) EPROM, Decode PLD, 19 I/O	PLCC44
ZPSD312	ST	5V	512Kb (x8) EPROM, 16Kb SRAM, Decode PLD, 19 I/O	PLCC44, PQFP44, TQFP44
ZPSD312R	ST	5V	512Kb (x8) EPROM, Decode PLD, 19 I/O	PLCC44
ZPSD313	ST	5V	1Mb (x8) EPROM, 16Kb SRAM, Decode PLD, 19 I/O	PLCC44, PQFP44, TQFP44
ZPSD313R	ST	5V	1Mb (x8) EPROM, Decode PLD, 19 I/O	PLCC44
ZPSD401A1	ST	5V	256Kb (x16) EPROM, 16Kb SRAM, Decode, 40 I/O, 8 Macrocell PLD	PLCC68, TQFP80
ZPSD401A2	ST	5V	256Kb (x16) EPROM, 16Kb SRAM, Decode, 40 I/O, 24 Macrocell PLD	PLCC68, TQFP80
ZPSD402A1	ST	5V	512Kb (x16) EPROM, 16Kb SRAM, Decode, 40 I/O, 8 Macrocell PLD	PLCC68, TQFP80
ZPSD402A2	ST	5V	512Kb (x16) EPROM, 16Kb SRAM, Decode, 40 I/O, 24 Macrocell PLD	PLCC68, TQFP80
ZPSD403A1	ST	5V	1Mbit (x16) EPROM, 16Kb SRAM, Decode, 40 I/O, 8 Macrocell PLD	PLCC68, TQFP80
ZPSD403A2	ST	5V	1Mbit (x16) EPROM, 16Kb SRAM, Decode, 40 I/O, 24 Macrocell PLD	PLCC68, TQFP80
ZPSD411A1	ST	5V	256Kb (x8) EPROM, 16Kb SRAM, Decode, 40 I/O, 8 Macrocell PLD	PLCC68, TQFP80
ZPSD411A2	ST	5V	256Kb (x8) EPROM, 16Kb SRAM, Decode, 40 I/O, 24 Macrocell PLD	PLCC68, TQFP80
ZPSD412A0	ST	5V	512Kb (x8) EPROM, Decode, 40 I/O, 8 Macrocell PLD	PLCC68, TQFP80
ZPSD412A1	ST	5V	512Kb (x8) EPROM,16Kb SRAM, Decode, 40 I/O, 8 Macrocell PLD	PLCC68, TQFP80
ZPSD412A2	ST	5V	512Kb (x8) EPROM,16Kb SRAM, Decode, 40 I/O, 24 Macrocell PLD	PLCC68, TQFP80
ZPSD413A1	ST	5V	1Mbit (x8) EPROM,16Kb SRAM, Decode, 40 I/O, 8 Macrocell PLD	PLCC68, TQFP80
ZPSD501B1	ST	5V	256Kb(x16) EPROM,16Kb SRAM, Decode, 40 I/O, PLD, Counters/Timers	PLCC68, TQFP80
ZPSD502B1	ST	5V	512Kb(x16) EPROM,16Kb SRAM, Decode, 40 I/O, PLD, Counters/Timers	PLCC68, TQFP80
ZPSD503B1	ST	5V	1Mbit (x16) EPROM,16Kb SRAM, Decode, 40 I/O, PLD, Counters/Timers	PLCC68, TQFP80
ZPSD511B1	ST	5V	256Kb (x8) EPROM,16Kb SRAM, Decode, 40 I/O, PLD, Counters/Timers	PLCC68, TQFP80
ZPSD512B0	ST	5V	512Kb (x8) EPROM, Decode, 40 I/O, PLD, Counters/Timers	PLCC68, TQFP80
ZPSD512B1	ST	5V	512Kb (x8) EPROM,16Kb SRAM, Decode, 40 I/O, PLD, Counters/Timers	PLCC68, TQFP80

PSD Product guide Zero power OTP

Ref	Supplier	Supply voltage	Description	Packages
ZPSD211RV	ST	3V	256Kb (x8) EPROM, Decode PLD, 19 I/O	PLCC44, PQFP44
ZPSD301V	ST	3V	256Kb (x16) EPROM, 16Kb SRAM, Decode PLD, 19 I/O	PLCC44, PQFP44, TQFP44
ZPSD302V	ST	3V	512Kb (x16) EPROM, 16Kb SRAM, Decode PLD, 19 I/O	PLCC44, PQFP44, TQFP44
ZPSD303V	ST	3V	1Mb (x16) EPROM, 16Kb SRAM, Decode PLD, 19 I/O	PLCC44, PQFP44, TQFP44
ZPSD311V	ST	3V	256Kb (x8) EPROM, 16Kb SRAM, Decode PLD, 19 I/O	PLCC44, PQFP44, TQFP44
ZPSD312V	ST	3V	512Kb (x8) EPROM, 16Kb SRAM, Decode PLD, 19 I/O	PLCC44, PQFP44, TQFP44
ZPSD313V	ST	3V	1Mb (x8) EPROM, 16Kb SRAM, Decode PLD, 19 I/O	PLCC44, PQFP44, TQFP44
ZPSD401A1V	ST	3V	256Kb(x16) EPROM,16Kb SRAM, Decode, 40 I/O, 8 Macrocell PLD	PLCC68, TQFP80
ZPSD401A2V	ST	3V	256Kb(x16) EPROM,16Kb SRAM, Decode, 40 I/O, 24 Macrocell PLD	PLCC68, TQFP80
ZPSD402A1V	ST	3V	512Kb(x16) EPROM,16Kb SRAM, Decode, 40 I/O, 8 Macrocell PLD	PLCC68, TQFP80
ZPSD402A2V	ST	3V	512Kb(x16) EPROM,16Kb SRAM, Decode, 40 I/O, 24 Macrocell PLD	PLCC68, TQFP80
ZPSD403A1V	ST	3V	1Mbit (x16) EPROM,16Kb SRAM, Decode, 40 I/O, 8 Macrocell PLD	PLCC68, TQFP80
ZPSD403A2V	ST	3V	1Mbit (x16) EPROM,16Kb SRAM, Decode, 40 I/O, 24 Macrocell PLD	PLCC68, TQFP80
ZPSD411A1V	ST	3V	256Kb (x8) EPROM,16Kb SRAM, Decode, 40 I/O, 8 Macrocell PLD	PLCC68, TQFP80
ZPSD411A2V	ST	3V	256Kb (x8) EPROM,16Kb SRAM, Decode, 40 I/O, 24 Macrocell PLD	PLCC68, TQFP80
ZPSD412A1V	ST	3V	512Kb (x8) EPROM,16Kb SRAM, Decode, 40 I/O, 8 Macrocell PLD	PLCC68, TQFP80
ZPSD412A2V	ST	3V	512Kb (x8) EPROM,16Kb SRAM, Decode, 40 I/O, 24 Macrocell PLD	PLCC68, TQFP80
ZPSD413A1V	ST	3V	1Mbit (x8) EPROM,16Kb SRAM, Decode, 40 I/O, 8 Macrocell PLD	PLCC68, TQFP80
ZPSD413A2V	ST	3V	1Mbit (x8) EPROM,16Kb SRAM, Decode, 40 I/O,24 Macrocell PLD	PLCC68, TQFP80
ZPSD501B1V	ST	3V	256Kb (x16) EPROM,16Kb SRAM, Decode, 40 I/O, PLD, Counters/Timers	PLCC68, TQFP80
ZPSD502B1V	ST	3V	512Kb (x16) EPROM,16Kb SRAM, Decode, 40 I/O, PLD, Counters/Timers	PLCC68, TQFP80
ZPSD503B1V	ST	3V	1Mbit (x16) EPROM,16Kb SRAM, Decode, 40 I/O, PLD, Counters/Timers	PLCC68, TQFP80
ZPSD511B1V	ST	3V	256Kb (x8) EPROM,16Kb SRAM, Decode, 40 I/O, PLD, Counters/Timers	PLCC68, TQFP80
ZPSD512B1V	ST	3V	512Kb (x8) EPROM,16Kb SRAM, Decode, 40 I/O, PLD, Counters/Timers	PLCC68, TQFP80
ZPSD513B1V	ST	3V	1Mbit (x8) EPROM,16Kb SRAM, Decode, 40 I/O, PLD, Counters/Timers	PLCC68, TQFP80

NVRAM part numbering guide - ST

M48 T 35A V - 10 MH 1 TR

ST Memory

NVRAM Product Types

M4 = SNAPHAT Top
M40 = ZEROPOWER Supervisors
M41 = Serial TIMEKEEPERs (RTC)
M48 = 8 bit ZEROPOWER/
TIMEKEEPER NVRAM
M68 = Low Power SRAMs

Functions

Z = ZEROPOWER
T = TIMEKEEPER
SZ = ZEROPWER with
Supervisor functions
ST = TIMEKEEPER with
Supervisor functions

Product Sub-Family

256 = **256Kb** (x8)
512 = **512Kb** (x8)
516 = **512Kb** (x16)
1001 = **1Mb** (x8)
1024 = **1Mb** (x16)
2001 = **2Mb** (x8)

Operating Voltage

Blank = 4.75V to 5.25V
Y = 4.5V to 5.5V
V = 3.0V to 3.6V
W = 2.7V - 3.6V

Speed

10 = 100 ns
70 = 370 ns
85 = 85 ns
100 = 100 ns
150 = 150 ns
200 = 200 ns

Packages

B = PDIP
F = FDIPW
C = PLCC
N = TSOP
K = PLCC
M = SO

Operating Temp.

1 = 0 to +70 ºC
6 = -40 to +85 ºC

TR = Tape and Reel

NVRAM product guide - Timekeeper products

Size	Supplier	Ref	Description	Packages
4Mb	ST	M48T513V	4Mb (x8), 85ns, 3.3V +/-10%, 7 year battery**, Watchdog, Reset Output, Alarms, Battery Low Flag, Wake-up, Push-Button Reset, Century	PMLDIP36, Chipset
	ST	M48T513Y	4Mb (x8), 70/85ns, 5V+/-10%, 7 year battery**, Watchdog, Reset Output, Alarms, Battery Low Flag, Wake-up, Push-Button Reset, Century	PMLDIP36, Chipset
	ST	M48T512V	4Mb (x8), 85ns, 3.3V +/-10%, 10 year battery	PMDIP32
	ST	M48T512Y	4Mb (x8), 70ns, 5V +/-10%, 10 year battery	PMDIP32
	ST	M48T251V	4Mb (x8), 85ns, 3.3V +/-10%, 10 year battery**, with Phantom	PMDIP32
	ST	M48T251Y	4Mb (x8), 70ns, 5V +/-10%, 10 year battery**, with Phantom	PMDIP32
1Mb	ST	M48T248V	1Mb (x8), 85ns, 3.3V +/-10%, 10 year battery**, with Phantom	PMDIP32
	ST	M48T248Y	1Mb (x8), 70ns, 5V +/-10%, 10 year battery**, with Phantom	PMDIP32
	ST	M48T129V	1Mb (x8), 85ns, 3.3V +/-10%, 10 year battery**,Watchdog, Reset Output, Alarms, Battery Low Flag, Wake-up, Century	PMDIP32, Chipset
	ST	M48T129Y	1Mb (x8), 70ns, 5V +/-10%, 10 year battery**,Watchdog, Reset Output, Alarms, Battery Low Flag, Wake-up, Century	PMDIP32, Chipset
	ST	M48T128V	1Mb (x8), 85ns, 3.3V +/-10%, 10 year battery	PMDIP32
	ST	M48T128Y	1Mb (x8), 70ns, 5V +/-10%, 10 year battery	PMDIP32
256Kb	ST	M48T37V	256Kb (x8), 100ns, 3.3V +/-10%, 10 year battery**, Watchdog, Reset Output, Alarms, Battery Low Flag, Wake-up, Century	SOH44 *
	ST	M48T37Y	256Kb (x8), 70ns, 5V +/-10%, 10 year battery**, Watchdog, Reset Output, Alarms, Battery Low Flag, Wake-up, Century	SOH44 *
	ST	M48T35AV	256Kb (x8), 100ns, 3.3V +/-10%, 10 year battery**, Battery Low Flag(BOK), Century	PCDIP28, SOH28
	ST	M48T35AY	256Kb (x8), 70ns, 5V +/-10%, 10 year battery**, Battery Low Flag(BOK), Century	PCDIP28, SOH28
	ST	M48T35Y	256Kb (x8), 70ns, 5V +/-10%, 10 year battery**, Century	PCDIP28, SOH28*
	ST	M48T35	256Kb (x8), 70ns, 5V +10/-5%, 10 year battery, Century	PCDIP28

NVRAM product guide - Timekeeper products

Size	Supplier	Ref	Description	Packages
64Kb	ST	M48ST59W	64Kb (x8), 100ns, 2.7V to 3.6V, 10 year battery**, Watchdog, Reset Output, Alarms, Battery Low Flag, Wake-up, PFI/PFO	SOH44
	ST	M48T59Y	64Kb (x8), 70ns, 5V +/-10%, 10 year battery**, Watchdog, Reset Output, Alarms, Battery Low Flag, Wake-up	PCDIP28, SOH28*
	ST	M48T59	64Kb (x8), 70ns, 5V +10/-5%, 10 year battery**, Watchdog, Reset Output, Alarms, Battery Low Flag, Wake-up	PCDIP28
	ST	M48T58V	64Kb (x8), 100ns, 3.3V +/-10%, 10 year battery**, Battery Low Flag	SOH28
	ST	M48T58Y	64Kb (x8), 70ns, 5V +/-10%, 10 year battery**, Battery Low Flag	PCDIP28, SOH28
	ST	M48T58	64Kb (x8), 70ns, 5V +10/-5%, 7 year battery, Battery Low Flag	PCDIP28
	ST	M48T18	64Kb (x8), 100/150ns, 5V +/-10%, 10 year battery, Power Fail Interrupt	PCDIP28, SOH28
	ST	M48T08	64Kb (x8), 100/150ns, 5V +10/-5%, 10 year battery, Power Fail Interrupt	PCDIP28
	ST	M48T559Y	64Kb (x8), Tri-Muxed Bus(Addr/Addr/Data), 5V +/-10%, 10 year battery**, Watchdog, Reset Output, Alarms, Battery Low Flag, Wake-up, Push-Button Reset	SOH28
16Kb	ST	M48T12	16Kb (x8), 70/150/200ns, 5V +/-10%, 10 year battery, Battery Low Flag(BOK)	PCDIP24
	ST	M48T02	16Kb (x8), 70/150/200ns, 5V +10/-5%, 10 year battery, Battery Low Flag(BOK)	PCDIP24
1Kb	ST	M48T86	1Kb (x8), 5V+/-10%, Muxed Addr/Data, Alarms, Battery Low Flag, Square Wave, AM/PM	PCDIP24, SOH28

NVRAM product guide - SUPERVISOR

Size	Supplier	Ref	Description	Packages
1Mb to16Mb	ST	M40Z300W	NVRAM SUPERVISOR, 2.7 to 3.6V, selectable Power-fail Deselect voltage, controls up to four 1Mb to 4Mb LPSRAMs, Reset Output, Battery Low Output	SO16, SOH28
	ST	M40Z300	NVRAM SUPERVISOR, 5V+/-10% or 5V+10/-5%, selectable Power-fail Deselect voltage, controls up to four 1Mb to 4Mb LPSRAMs, Reset Output, Battery Low Output	SO16, SOH28
1Mb to 4Mb	ST	M40SZ100W	NVRAM SUPERVISOR 2.7 to 3.6V, Reset Output, PFI/PFO, Battery-Low Output	SO16
0 to 8Mb	ST	M48T212V	TIMEKEEPER SUPERVISOR (x8), 85ns, 3.3V +/-10%, Watchdog, Reset Output, Alarms, Battery Low Flag, Wake-up, Vcc Switch Output, Push-Button Reset, Century	SOH44
	ST	M48T212Y	TIMEKEEPER SUPERVISOR (x8), 70ns, 5V +/-10%, Watchdog, Reset Output, Alarms, Battery Low Flag, Wake-up, Vcc Switch Output, Push-Button Reset, Century	SOH44
	ST	M48T212A	TIMEKEEPER SUPERVISOR (x8), 85ns, 3.3V +/-10%, same features as M48T212Y above but has pins for external crystal and battery/supercap ("hat"less)	SO44
1Mb to 4Mb	ST	M40Z111W	NVRAM SUPERVISOR, 3.0 +/-10% or 3.3V +/-10%V, selectable Power-fail Deselect voltage, controls 1Mb to 4Mb LPSRAM	SOH28
	ST	M40Z111	NVRAM SUPERVISOR, 5V +/-10% or 5V +10/-5%, selectable Power-fail Deselect voltage, controls 1Mb to 4Mb LPSRAM	SOH28
	ST	M48T201V	TIMEKEEPER SUPERVISOR (x8), 85ns, 3.3V+/-10%, 10 year battery,Watchdog, Reset Output, Alarms, Battery Low Flag, Wake-up, Push-Button Reset, Square Wave, Century	SOH44
	ST	M48T201Y	TIMEKEEPER SUPERVISOR (x8), 70ns, 5V+/-10%, 10 year battery,Watchdog, Reset Output, Alarms, Battery Low Flag, Wake-up, Push-Button Reset, Square Wave, Century	SOH44
512b	ST	M41ST85W	Combination Serial RTC and NVRAM Supervisor; 512b (x8) 2.7 to 3.6V, 400KHz I2C serial bus, Alarm, Square Wave, Watchdog, Two Reset Inputs, Reset Output, PFI/PFO, External RAM Control, Industrial Temperature, 500nA	SOH28
	ST	M41ST85Y	Combination Serial RTC and NVRAM Supervisor; 512b (x8) 5V+/-10%, 400KHz I2C serial bus, Alarm, Square Wave, Watchdog, Two Reset Inputs, Reset Output, PFI/PFO, External RAM Control, Industrial Temperature, 500nA	SOH28

NVRAM product guide - LPSRAMs and Serial RTC‘s

Size	Supplier	Ref	Description	Packages
4Mb	ST	M68Z512W	4Mb (x8), 70ns, 3V Low Power SRAM	TSOP32 type II
	ST	M68Z512	4Mb (x8), 70ns, 5V Low Power SRAM	TSOP32 type II
1Mb	ST	M68Z128W	1Mb (x8), 70ns, 3V Low Power SRAM	TSOP32A
	ST	M68Z128	1Mb (x8), 55ns, 5V Low Power SRAM	TSOP32A

Size	Supplier	Ref	Description	Packages
512b	ST	M41ST85W	Combination Serial RTC and NVRAM Supervisor; 512b (x8) 2.7 to 3.6V, 400KHz I2C serial bus, Alarm, Square Wave, Watchdog, Two Reset Inputs, Reset Output, PFI/PFO, External RAM Control, Industrial Temperature, 500nA	SOH28
	ST	M41ST85Y	Combination Serial RTC and NVRAM Supervisor; 512b (x8) 5V+/-10%, 400KHz I2C serial bus, Alarm, Square Wave, Watchdog, Two Reset Inputs, Reset Output, PFI/PFO, External RAM Control, Industrial Temperature, 500nA	SOH28
	ST	M41ST84W	512b (x8) 2.7 to 3.6V, 400KHz I2C serial bus, Alarm, Square Wave, Watchdog, Reset Input, Reset Output, PFI/PFO, Industrial Temperature, 500nA	SO16, SOH28
	ST	M41ST84Y	512b (x8) 5V+/-10%, 400KHz I2C serial bus, Alarm, Square Wave, Watchdog, Reset Input, Reset Output, PFI/PFO, Industrial Temperature, 500nA	SO16, SOH28
	ST	M41T94	512b (x8) 2.7 to 5.5V, SPI serial bus, Alarm, Square Wave, Watchdog, Two Reset Inputs, Reset Output, Industrial Temperature, 500nA	SO16
	ST	M41T81	512b (x8) 2.0 to 5.5V, 400KHz I2C serial bus, Alarm, Square Wave, Watchdog, Industrial Temperature, 500nA	SO8
	ST	M41T56	512b (x8), 5V +/-10%, I2C serial bus, 500nA, Industrial Temperature Range	SO8, SOH28
	ST	MK41T56	512b (x8), 5V +/-10%, I2C serial bus, 500nA, Industrial Temperature Range	PSDIP8
	ST	M41T11	512b (x8), 2.0V to 5.5V, I2C serial bus, Industrial Temperature Range	SO8, SOH28
64b	ST	M41T00	64b (x8), 2.0V to 5.5V, I2C serial bus, Industrial Temperature Range	SO8

NVRAM part numbering guide – XCR - Serial NOVRAM

X24C 44 P I - V

Vcc limits
Blank = 5V+/-10%

Size
44 = 16 x 16
45 = 16 X16 w/autostore

Temp. Range
C = 0-70
I = -40 to +85
M = -55 to + 125

Package
D = CERDIP-8
P = PDIP-8
S = SOIC-8

NVRAM part numbering guide – XCR - Parallel NOVRAM

X20C0 4 P I - 25

Vcc limits
Blank = 5V+/-10%

Size
4 = 512 K x 8
16 = 16 K

Temp. Range
C = 0-70
I = -40 to +85
M = -55 to + 125
MB = MIL-STD-883

Package
D = CERDIP-28
P = PDIP-28
J = PLCC-32

NVRAM product guide – Serail and Parallel

Mfr	Density	Organisation	Supply type (V)	Part No.	Package	Speed
XCR	256 B	x16	10	X24C44	Pdip-8, SOIC-8	
XCR	256 B	x16	10	X24C45	Pdip-8, SOIC-8	
XCR	4 K	x8	4.5-5.5	X20C04	Pdip-28, PLCC-32	150-250
XCR	16 K	x8	4.5-5.5	X20C16	Pdip-28, SOIC-28, PLCC-32	150-250